JAGUAR

Workshop Manual

X-TYPE

Sedan and Estate (Wagon)

2.0 L, 2.5 L and 3.0 L Gasoline;
2.0 L and 2.2 L, Diesel

2001 to 2009

www.JagDocs.com

TABLE OF CONTENTS

1: General Information

100: Service Information

100-00: General Information
Description and Operation
About This Manual
Application and Use of Specifications
General Service Information
Health and Safety Precautions
How To Use This Manual
Important Safety Instructions
Road/Roller Testing
Solvents, Sealants and Adhesives
Standard Workshop Practices

100-01: Identification Codes
Description and Operation
Identification Codes

100-02: Jacking and Lifting
Description and Operation
Jacking
Lifting

100-04: Noise, Vibration and Harshness
Description and Operation
Noise, Vibration and Harshness (NVH)
Diagnosis and Testing
Noise, Vibration and Harshness (NVH)
General Procedures
Exhaust System Neutralizing

JagDocs.com

2: Chassis

204: Suspension

204-00: Suspension System - General Information

- Specification
- Description and Operation
  - Wheel Alignment Angles
- Diagnosis and Testing
  - Suspension System
- General Procedures
  - Front Toe Adjustment (57.65.01)
  - Rear Toe Adjustment (57.65.08)
  - Wheel Bearing Inspection

204-01: Front Suspension

- Specification
- Description and Operation
  - Front Suspension
- Diagnosis and Testing
  - Front Suspension
- Removal and Installation
  - Lower Arm (60.35.02)
  - Shock Absorber and Spring Assembly (60.30.02)
  - Front Stabilizer Bar (60.10.01)
  - Front Stabilizer Bar Bushing (60.10.04)
  - Front Wheel Bearing and Wheel Hub (60.25.03)
  - Wheel Knuckle (60.25.23)
- Disassembly and Assembly
  - Shock Absorber and Spring Assembly (60.30.21)

204-02: Rear Suspension

- Specification
- Description and Operation
  - Rear Suspension
- Diagnosis and Testing
  - Rear Suspension

JagDocs.com

Removal and Installation
Damper
Front Lower Arm (64.35.51) - 4-Door
Front Lower Arm (64.35.51) - Wagon
Rear Lower Arm (64.35.52)
Spring (64.20.01)
Rear Stabilizer Bar (64.35.08)
Rear Stabilizer Bar Link (64.35.24)
Upper Arm (64.25.31)
Wheel Hub (64.15.14)
Wheel Knuckle (64.15.22)
Wheel Knuckle Front Bushing (64.15.28)
Wheel Knuckle Rear Bushing (64.15.30)

204-04: Wheels and Tires
Specification
Description and Operation
Safety Precautions
Wheels and Tires
Diagnosis and Testing
Wheels and Tires
Removal and Installation
Tire Low Pressure Sensor - VIN Range: J28493->V99999
Tire Pressure Monitoring System (TPMS) Front Antenna - VIN Range: J28493->V99999
Tire Pressure Monitoring System (TPMS) Main Antenna - VIN Range: J28493->V99999
Tire Pressure Monitoring System (TPMS) Module - VIN Range: J28493->V99999
Tire Pressure Monitoring System (TPMS) Rear Antenna - VIN Range: J28493->V99999
Wheel and Tire (74.20.05)

205: Driveline

205-00: Driveline System - General Information
Description and Operation
Driveline System
JagDocs.com

Diagnosis and Testing
Driveline System

205-01: Driveshaft
Specification
Description and Operation
Driveshaft
Diagnosis and Testing
Driveshaft
General Procedures
Driveshaft Runout and Balancing
Removal and Installation
Driveshaft (47.15.01)

205-02: Rear Drive Axle/Differential
Specification
Description and Operation
Rear Drive Axle and Differential
Diagnosis and Testing
Rear Drive Axle and Differential
In-Vehicle Repair
Axle Shaft Seal (51.20.04) (51.20.36)
Drive Pinion Flange
Drive Pinion Seal (51.20.01)
Removal and Installation
Axle Assembly (51.25.13)

205-04: Front Drive Halfshafts
Specification
Description and Operation
Front Drive Halfshafts
Diagnosis and Testing
Front Drive Halfshafts
Removal and Installation
Front Halfshaft LH (47.10.15)
Front Halfshaft RH (47.10.16) - 2.0L NA V6 - AJV6/2.5L NA V6 - AJV6/3.0L NA V6 – AJ27

JagDocs.com

Front Halfshaft RH (47.10.16) - 2.0L Duratorq-TDCi/2.2L Duratorq-TDCi (110kW/150PS) - Puma
Inner Constant Velocity (CV) Joint Boot (47.10.18)
Intermediate Shaft
Outer Constant Velocity (CV) Joint Boot (47.10.19)

205-05: Rear Drive Halfshafts
Specification
Description and Operation
Rear Drive Halfshafts
Diagnosis and Testing
Rear Drive Halfshafts
Removal and Installation
Rear Halfshaft (47.10.13)
Outer Constant Velocity (CV) Joint Boot (47.10.32)

206: Brake System

206-00: Brake System - General Information
Specification
Description and Operation
Brake System
Diagnosis and Testing
Brake System
General Procedures
Brake Disc Runout Check
Brake System Bleeding (70.25.03)

206-03: Front Disc Brake
Specification
Description and Operation
Front Disc Brake
Diagnosis and Testing
Front Disc Brake
Removal and Installation
Brake Caliper (70.55.02)
Brake Disc (70.10.10)

JagDocs.com

Brake Pads (70.40.02)

206-04: Rear Disc Brake
Specification
Description and Operation
Rear Disc Brake
Diagnosis and Testing
Rear Disc Brake
Removal and Installation
Brake Caliper (70.55.03) (70.55.25)
Brake Disc (70.10.11)
Brake Disc Shield (70.10.19)
Brake Pads (70.40.03)

206-05: Parking Brake and Actuation
Specification
Description and Operation
Parking Brake
Diagnosis and Testing
Parking Brake
General Procedures
Removal and Installation
Parking Brake Cable (70.35.29) - Vehicles With: Manually Adjusted Parking Brake
Parking Brake Cable (70.35.29) - Vehicles With: Self-Adjusting Parking Brake
Parking Brake Control (70.35.08) - Vehicles With: Manually Adjusted Parking Brake
Parking Brake Control (70.35.08) - Vehicles With: Self-Adjusting Parking Brake

206-06: Hydraulic Brake Actuation
Specification
Description and Operation
Hydraulic Brake Actuation
Diagnosis and Testing
Hydraulic Brake Actuation
Removal and Installation
Brake Fluid Reservoir (70.30.16)
Brake Master Cylinder (70.30.08)

JagDocs.com

Brake Pedal and Bracket (70.35.03)
Brake Pedal Cross-Shaft

206-07: Power Brake Actuation

Specification
Description and Operation
Brake Booster
Diagnosis and Testing
Power Brake System
Removal and Installation
Brake Booster (70.50.17) - LHD AWD/LHD FWD
Brake Booster (70.50.17) - RHD AWD/RHD FWD
Brake Vacuum Pump - 2.0L NA V6 - AJV6
Brake Vacuum Pump - 2.0L Duratorq-TDCi/2.2L Duratorq-TDCi (110kW/150PS) – Puma

206-09: Anti-Lock Control - Stability Assist

Specification
Description and Operation
Anti-Lock Control - Stability Assist
Diagnosis and Testing
Anti-Lock Control - Stability Assist - VIN Range: C00344->J12991
Anti-Lock Control - Stability Assist - VIN Range: J12992->V99999
Removal and Installation
Anti-Lock Brake System (ABS) Module (70.60.02) - VIN Range: C00001->J12991
Front Wheel Speed Sensor (70.60.03)
Hydraulic Control Unit (HCU) (70.60.18) (70.60.19) - VIN Range: C00001->J12991
Hydraulic Control Unit (HCU) (70.60.18) (70.60.19) - VIN Range: J12992->V99999
Rear Wheel Speed Sensor (70.60.04)
Stability Assist Module
Steering Wheel Rotation Sensor (86.56.58)
Yaw Rate Sensor (86.56.57) - 2.0L Duratorq-TDCi/2.0L NA V6 - AJV6/2.5L NA V6 – AJV6/3.0L NA V6 - AJ27
Yaw Rate Sensor (86.56.57) - 2.2L Duratorq-TDCi (110kW/150PS) – Puma

JagDocs.com

211: Steering System

211-00: Steering System - General Information

Specification
Description and Operation
Steering System
Diagnosis and Testing
Steering System
General Procedures
Power Steering System Filling
Power Steering System Flushing (57.15.08)

211-02: Power Steering

Specification
Description and Operation
Power Steering
Diagnosis and Testing
Power Steering
General Procedures
Start Up Procedure After Power Steering Pump/Gear Overhaul
Removal and Installation
Power Steering Control Valve Actuator (57.10.32) - 2.5L NA V6 - AJV6/3.0L NA V6 - AJ27
Power Steering Fluid Cooler (57.15.11) - 2.0L Duratorq-TDCi
Power Steering Fluid Cooler (57.15.11) - 2.2L Duratorq-TDCi (110kW/150PS) – Puma
Power Steering Fluid Reservoir (57.15.08)
Power Steering Pump (57.20.14) - 2.0L NA V6 - AJV6/2.5L NA V6 - AJV6/3.0L NA V6 - AJ27
Power Steering Pump (57.20.14) - 2.0L Duratorq-TDCi/2.2L Duratorq-TDCi (110kW/150PS) - Puma
Steering Gear (57.10.01) - 2.0L Duratorq-TDCi/2.2L Duratorq-TDCi (110kW/150PS) - Puma
Steering Gear (57.10.01) - 2.0L NA V6 - AJV6/2.5L NA V6 - AJV6/3.0L NA V6 – AJ27

JagDocs.com

211-03: Steering Linkage

- Specification
- Description and Operation
  - Steering Linkage
- Diagnosis and Testing
  - Steering Linkage
- Removal and Installation
  - Steering Gear Boot (57.10.29)
  - Tie Rod End (57.55.02)

211-04: Steering Column

- Specification
- Description and Operation
  - Steering Column
- Diagnosis and Testing
  - Steering Column
- Removal and Installation
  - Ignition Switch Lock Cylinder (57.40.29)
  - Steering Column (57.40.01)
  - Steering Column Coupling
  - Steering Wheel (57.60.01)

211-05: Steering Column Switches

- Description and Operation
  - Steering Column Switches
- Diagnosis and Testing
  - Steering Column Switches
- Removal and Installation
  - Steering Column Multifunction Switch LH (86.65.78)
  - Steering Column Multifunction Switch RH (86.65.41)

JagDocs.com

3: Powertrain

303: Engine

303-00: Engine System - General Information

- Specification
- Description and Operation
  - Engine
- Diagnosis and Testing
  - Engine
- General Procedures
  - Bearing Inspection
  - Camshaft Bearing Journal Clearance
  - Camshaft Bearing Journal Diameter
  - Camshaft End Play
  - Camshaft Lobe Lift
  - Camshaft Surface Inspection
  - Connecting Rod Cleaning
  - Connecting Rod Large End Bore
  - Crankshaft End Play
  - Crankshaft Main Bearing Journal Clearance
  - Crankshaft Main Bearing Journal Diameter
  - Cylinder Block Distortion
  - Cylinder Bore Out-of-Round
  - Cylinder Head Distortion
  - Exhaust Manifold Cleaning and Inspection
  - Flywheel Inspection
  - Piston Diameter
  - Piston Inspection
  - Piston Pin Diameter
  - Piston Pin to Bore Diameter
  - Piston Ring End Gap
  - Piston Ring-to-Groove Clearance
  - Valve Seat Inspection
  - Valve Spring Free Length
  - Valve Stem Diameter

JagDocs.com

Leakage Test Using Smoke Test Equipment

303-01A: Engine - 2.0L NA V6 - AJV6/2.5L NA V6 - AJV6/3.0L NA V6 - AJ27

Specification

Description and Operation

Engine

Diagnosis and Testing

Engine

General Procedures

Valve Clearance Adjustment (12.29.48)

Valve Clearance Check (12.29.47)

In-Vehicle Repair

Camshafts LH (12.13.19)

Crankshaft Front Seal (12.21.14)

Crankshaft Pulley (12.21.09)

Crankshaft Rear Seal (12.21.20)

Cylinder Head LH (12.29.02)

Engine Front Cover (12.65.01)

Engine Front Mount (12.45.01)

Exhaust Manifold LH (30.15.55)

Flexplate (12.53.13)

Exhaust Manifold RH (30.15.56)

Flywheel (12.53.07)

Intake Manifold (30.15.01)

Lower Intake Manifold (30.15.61)

Oil Cooler (12.60.68)

Oil Pan (12.60.44)

Oil Pressure Sender

Oil Pump (12.60.26)

Timing Drive Components (12.65.13)

Valve Cover LH (12.29.43)

Valve Cover RH (12.29.44)

Removal

Engine (12.41.01) - Vehicles With: 5-Speed Manual Transmission - MT75/6-Speed Manual Transaxle - MMT6

JagDocs.com

Engine (12.41.01) - Vehicles With: 5-Speed Automatic Transaxle - JATCO/6-Speed Automatic Transaxle - AWF21

Disassembly

Engine

Disassembly and Assembly of Subassemblies

Cylinder Head (12.29.22)

Piston (12.17.02)

Assembly

Engine

Installation

Engine (12.41.01) - Vehicles With: 5-Speed Manual Transmission - MT75/6-Speed Manual Transaxle - MMT6

Engine (12.41.01) - Vehicles With: 5-Speed Automatic Transaxle - JATCO/6-Speed Automatic Transaxle - AWF21

303-01B: Engine - 2.0L Duratorq-TDCi/2.2L Duratorq-TDCi (110kW/150PS) - Puma

Specification

Description and Operation

Engine

In-Vehicle Repair

Crankshaft Front Seal (12.21.14)

Crankshaft Rear Seal (12.21.20)

Engine Front Cover (12.65.01)

Engine Front Mount (12.45.01)

Flexplate (12.53.13)

Flywheel (12.53.07)

Intake Manifold (30.15.01)

Oil Pan (12.60.44)

Timing Chain

Valve Cover

Removal

Engine (12.41.01) - 2.0L Duratorq-TDCi

Engine (12.41.01) - 2.2L Duratorq-TDCi (110kW/150PS) - Puma

Disassembly

Engine

Assembly

Engine

JagDocs.com

Installation
Engine (12.41.01) - 2.0L Duratorq-TDCi
Engine (12.41.01) - 2.2L Duratorq-TDCi (110kW/150PS) – Puma

303-03A: Engine Cooling - 2.0L NA V6 - AJV6/2.5L NA V6 - AJV6/3.0L NA V6 - AJ27

Specification
Description and Operation
Engine Cooling
Diagnosis and Testing
Engine Cooling
General Procedures
Cooling System Backflushing
Cooling System Draining, Filling and Bleeding
Cooling System Flushing
Removal and Installation
Block Heater (86.62.18)
Coolant Expansion Tank (26.15.01)
Cooling Fan Module (26.25.38)
Cooling Fan Motor (26.25.24)
Cooling Fan Motor and Shroud (26.25.25)
Cooling Module (26.40.16)
Radiator (26.40.01)
Thermostat (26.45.07)
Water Pump (26.50.01)
Water Pump Housing (26.50.07)

JagDocs.com

303-03B: Engine Cooling - 2.0L Duratorq-TDCi/2.2L Duratorq-TDCi (110kW/150PS) – Puma

Specification
Description and Operation
Engine Cooling
General Procedures
Cooling System Draining, Filling and Bleeding
Cooling System Draining and Vacuum Filling
Removal and Installation
Cooling Fan Motor and Shroud (26.25.25)

Cooling Module (26.40.16)
Radiator (26.40.01)
Water Pump (26.50.01)

303-04A: Fuel Charging and Controls - 2.0L NA V6 - AJV6/2.5L NA V6 - AJV6/3.0L NA V6 - AJ27

Specification
Description and Operation
Fuel Charging and Controls
Diagnosis and Testing
Fuel Charging and Controls - 2.0L NA V6 - AJV6
Fuel Charging and Controls - 2.5L NA V6 - AJV6/3.0L NA V6 - AJ27, VIN Range: E96603->J28492
Fuel Charging and Controls - 2.5L NA V6 - AJV6/3.0L NA V6 - AJ27, VIN Range: J28493->V99999
Removal and Installation
Fuel Charging Wiring Harness (86.70.22)
Fuel Injection Supply Manifold (19.60.13)
Fuel Injectors (18.10.02)
Fuel Pulse Damper (18.30.98) - 2.5L NA V6 - AJV6/3.0L NA V6 - AJ27
Throttle Body (19.70.04)

303-04B: Fuel Charging and Controls - 2.0L Duratorq-TDCi/2.2L Duratorq-TDCi (110kW/150PS) - Puma

Specification
Description and Operation
Fuel Charging and Controls
Diagnosis and Testing
Fuel Charging and Controls
General Procedures
Fuel Injection Component Cleaning
Removal and Installation
Fuel Injection Pump
Fuel Injection Supply Manifold (19.60.13)
Fuel Injector (18.10.01)
Fuel Metering Valve
Fuel Return Line Venturi

JagDocs.com

303-04C: Fuel Charging and Controls - Turbocharger

Specification

Description and Operation

Turbocharger

Diagnosis and Testing

Turbocharger

Removal and Installation

Turbocharger

303-05: Accessory Drive

Specification

Description and Operation

Accessory Drive

Diagnosis and Testing

Accessory Drive

Removal and Installation

Accessory Drive Belt (12.10.40) - 2.0L Duratorq-TDCi/2.2L Duratorq-TDCi (110kW/150PS) - Puma

Accessory Drive Belt (12.10.40) - 2.0L NA V6 - AJV6/2.5L NA V6 - AJV6/3.0L NA V6 - AJ27

Accessory Drive Belt Tensioner (12.10.41) - 2.0L Duratorq-TDCi/2.2L Duratorq-TDCi (110kW/150PS) - Puma

Accessory Drive Belt Tensioner (12.10.41) - 2.0L NA V6 - AJV6/2.5L NA V6 – AJV6/3.0L NA V6 - AJ27

Power Steering Pump Belt - 2.0L Duratorq-TDCi/2.2L Duratorq-TDCi (110kW/150PS) - Puma

Power Steering Pump Belt Tensioner - 2.0L Duratorq-TDCi/2.2L Duratorq-TDCi (110kW/150PS) - Puma

Water Pump Belt (12.10.44) - 2.0L NA V6 - AJV6/2.5L NA V6 - AJV6/3.0L NA V6 – AJ27

Water Pump Belt Tensioner (12.10.45) - 2.0L NA V6 - AJV6/2.5L NA V6 – AJV6/3.0L NA V6 - AJ27

303-06: Starting System

Specification

Description and Operation

JagDocs.com

Starting System
Diagnosis and Testing
Starting System - 2.0L NA V6 - AJV6
Starting System - 2.5L NA V6 - AJV6/3.0L NA V6 - AJ27
Removal and Installation
Starter Motor (86.60.01) - 2.0L Duratorq-TDCi
Starter Motor (86.60.01) - 2.2L Duratorq-TDCi (110kW/150PS) - Puma
Starter Motor (86.60.01) - 2.0L NA V6 - AJV6/2.5L NA V6 - AJV6/3.0L NA V6 – AJ27

303-07A: Engine Ignition - 2.0L NA V6 - AJV6/2.5L NA V6 - AJV6/3.0L NA V6 - AJ27
Specification
Description and Operation
Engine Ignition
Diagnosis and Testing
Engine Ignition - 2.0L NA V6 - AJV6
Engine Ignition - 2.5L NA V6 - AJV6/3.0L NA V6 - AJ27
Removal and Installation
Ignition Coil-On-Plug LH (18.20.44)
Ignition Coil-On-Plug RH (18.20.43)

303-07B: Glow Plug System
Specification
Description and Operation
Glow Plug System
Diagnosis and Testing
Glow Plug System
Removal and Installation
Glow Plugs

303-08: Engine Emission Control - 2.0L Duratorq-TDCi/2.2L Duratorq-TDCi (110kW/150PS) - Puma
Specification
Description and Operation
Engine Emission Control
Diagnosis and Testing
Engine Emission Control

JagDocs.com

Removal and Installation
Exhaust Gas Recirculation (EGR) Cooler
Exhaust Gas Recirculation (EGR) Cooler to EGR Valve Tube
Exhaust Gas Recirculation (EGR) Valve (17.45.01)

303-12A: Intake Air Distribution and Filtering - 2.0L NA V6 - AJV6/2.5L NA V6 – AJV6/3.0L NA V6 - AJ27
Description and Operation
Intake Air Distribution and Filtering
Diagnosis and Testing
Intake Air Distribution and Filtering
Removal and Installation
Air Cleaner (19.10.05)
Air Cleaner Element (19.10.08)
Air Cleaner Outlet Pipe (19.10.31)

303-12B: Intake Air Distribution and Filtering - 2.0L Duratorq-TDCi/2.2L Duratorq-TDCi (110kW/150PS) - Puma
Specification
Description and Operation
Intake Air Distribution and Filtering
Diagnosis and Testing
Intake Air Distribution and Filtering
Removal and Installation
Air Cleaner (19.10.05)
Air Cleaner Element (19.10.08)
Air Cleaner Outlet Pipe (19.10.31)
Charge Air Cooler - 2.0L Duratorq-TDCi
Charge Air Cooler - 2.2L Duratorq-TDCi (110kW/150PS) – Puma

303-13: Evaporative Emissions
Specification
Description and Operation
Evaporative Emissions
Diagnosis and Testing
Evaporative Emissions - 2.0L NA V6 - AJV6
Evaporative Emissions - 2.5L NA V6 - AJV6/3.0L NA V6 - AJ27

JagDocs.com

Removal and Installation
Evaporative Emission Canister (17.15.13) - 2.0L NA V6 - AJV6
Evaporative Emission Canister (17.15.13) - 2.5L NA V6 - AJV6/3.0L NA V6 - AJ27
Evaporative Emission Canister Purge Valve (17.15.30)

303-14A: Electronic Engine Controls - 2.0L NA V6 - AJV6/2.5L NA V6 - AJV6/3.0L NA V6 - AJ27

Specification
Description and Operation
Electronic Engine Controls
Diagnosis and Testing
Electronic Engine Controls - 2.0L NA V6 - AJV6
Electronic Engine Controls - 2.5L NA V6 - AJV6/3.0L NA V6 - AJ27, VIN Range: E96603->J28492
Electronic Engine Controls - 2.5L NA V6 - AJV6/3.0L NA V6 - AJ27, VIN Range: J28493->V99999
General Procedures
Powertrain Control Module (PCM) Long Drive Cycle Self-Test
Powertrain Control Module (PCM) Short Drive Cycle Self-Test
Removal and Installation
Camshaft Position (CMP) Sensor (18.30.63)
Catalyst Monitor Sensor LH (18.30.81)
Catalyst Monitor Sensor RH (18.30.80)
Crankshaft Position (CKP) Sensor (18.30.12)
Engine Control Module (ECM) (18.30.01)
Fuel Temperature Sensor (18.30.99) - 2.5L NA V6 - AJV6/3.0L NA V6 - AJ27
Heated Oxygen Sensor (HO2S) LH (18.30.79)
Heated Oxygen Sensor (HO2S) RH (18.30.78)
Knock Sensor (KS) (18.30.69)
Mass Air Flow (MAF) Sensor (18.30.15)
Oil Temperature Sensor (18.31.01)
Throttle Position (TP) Sensor (18.30.17)
Variable Camshaft Timing (VCT) Oil Control Solenoid (18.30.90)

303-14B: Electronic Engine Controls - 2.0L Duratorq-TDCi/2.2L Duratorq-TDCi (110kW/150PS) - Puma

Specification

JagDocs.com

Description and Operation
Electronic Engine Controls
Diagnosis and Testing
Electronic Engine Controls
Removal and Installation
Camshaft Position (CMP) Sensor (18.30.63)
Catalytic Converter Temperature Sensor
Crankshaft Position (CKP) Sensor (18.30.12)
Cylinder Head Temperature (CHT) Sensor (18.30.97)
Diesel Particulate Filter (DPF) Temperature Sensor
Engine Control Module (ECM) (18.30.01)
Engine Oil Pressure (EOP) Sensor
Fuel Temperature Sensor (18.30.99)
Knock Sensor (KS) (18.30.69)
Manifold Absolute Pressure and Temperature (MAPT) Sensor
Manifold Absolute Pressure (MAP) Sensor (18.30.86)
Mass Air Flow (MAF) Sensor (18.30.15)

307: Automatic Transmission/Transaxle

307-01A: Automatic Transmission/Transaxle - Vehicles With: 5-Speed Automatic Transaxle - JATCO
Specification
Description and Operation
Transmission Description - Vehicles With: 5-Speed Automatic Transaxle - JATCO
Diagnosis and Testing
Diagnostic Strategy - Vehicles With: 5-Speed Automatic Transaxle - JATCO
General Procedures
Transmission Fluid Drain and Refill (44.24.02)
Transmission Fluid Level Check
Transmission Range (TR) Sensor Adjustment (44.15.37)
In-Vehicle Repair
Halfshaft Seal LH (37.23.10)
Halfshaft Seal RH
Main Control Valve Body (44.40.01)
Shift Solenoids (SS) (44.15.50)
Transaxle Support Insulator (37.16.42)

JagDocs.com

Transmission Control Module (TCM) (44.15.32)
Transmission Range (TR) Sensor
Removal
Transaxle (44.20.01)
Disassembly and Assembly of Subassemblies
Input Shaft Seal (44.32.07)
Installation
Transaxle (44.20.01)

307-01B: Automatic Transmission/Transaxle - Vehicles With: 6-Speed Automatic Transaxle - AWF21

Specification
Description and Operation
Transmission Description - Vehicles With: 6-Speed Automatic Transaxle - AWF21
Transmission Electronic Control System - Vehicles With: 6-Speed Automatic Transaxle - AWF21
Diagnosis and Testing
Diagnostic Strategy - Vehicles With: 6-Speed Automatic Transaxle - AWF21
General Procedures
Transmission Fluid Drain and Refill (44.24.02)
Transmission Fluid Level Check
In-Vehicle Repair
Main Control Valve Body (44.40.01)
Selector Shaft Seal
Transmission Control Module (TCM) (44.15.32)
Transmission Internal Wiring Harness (44.15.35)
Transmission Fluid Pan (44.24.04)
Removal and Installation
Torque Converter
Torque Converter Seal
Turbine Shaft Speed (TSS) Sensor
Removal
Transmission (44.20.01)
Installation
Transmission (44.20.01)

JagDocs.com

307-02A: Transmission/Transaxle Cooling - Vehicles With: 5-Speed Automatic Transaxle - JATCO

Specification

Description and Operation

Transmission Cooling - Vehicles With: 5-Speed Automatic Transaxle - JATCO

Diagnosis and Testing

Transmission Cooling

Removal and Installation

Transmission Fluid Cooler (44.24.10)

Transmission Fluid Cooler Tubes (44.24.19)

307-02B: Transmission/Transaxle Cooling - Vehicles With: 6-Speed Automatic Transaxle - AWF21

Specification

Description and Operation

Transmission Cooling - Vehicles With: 6-Speed Automatic Transaxle - AWF21

Diagnosis and Testing

Transmission Cooling

Removal and Installation

Transmission Fluid Cooler (44.24.10)

Transmission Fluid Cooler Return Tube (44.24.13) (44.24.29)

Transmission Fluid Cooler Supply Tube (44.24.14) (44.24.28)

307-05A: Automatic Transmission/Transaxle External Controls - Vehicles With: 5-Speed Automatic Transaxle - JATCO

Specification

Description and Operation

External Controls - Vehicles With: 5-Speed Automatic Transaxle - JATCO

Diagnosis and Testing

External Controls

General Procedures

Selector Lever Cable Adjustment (44.15.07)

Removal and Installation

Selector Lever Cable and Bracket (44.15.08)

Selector Lever Assembly (44.15.04)

JagDocs.com

307-05B: Automatic Transmission/Transaxle External Controls - Vehicles With:

6-Speed Automatic Transaxle - AWF21

Specification

Description and Operation

External Controls - Vehicles With: 6-Speed Automatic Transaxle - AWF21

Diagnosis and Testing

External Controls

General Procedures

Selector Lever Cable Adjustment (44.15.07)

Removal and Installation

Selector Lever Assembly (44.15.04)

Selector Lever Knob (44.15.06)

308: Manual Transmission/Transaxle, Clutch and Transfer Case

308-00: Manual Transmission/Transaxle and Clutch - General Information

Specification

Description and Operation

Manual Transmission and Clutch

Diagnosis and Testing

Manual Transmission and Clutch

General Procedures

Clutch System Bleeding (33.15.01) - Vehicles With: 5-Speed Manual Transmission - MT75

Clutch System Bleeding (33.15.01) - Vehicles With: 6-Speed Manual Transaxle – MMT6

Gearshift Cable Adjustment (37.16.47)

Release Hub and Bearing Check

308-01: Clutch

Specification

Description and Operation

Clutch

Diagnosis and Testing

Clutch

Removal and Installation

JagDocs.com

Clutch Disc and Pressure Plate (12.53.13) (33.10.01)

308-02: Clutch Controls
Specification
Description and Operation
Clutch Controls
Diagnosis and Testing
Clutch Controls
Removal and Installation
Clutch Master Cylinder (33.20.01)
Clutch Slave Cylinder (33.35.01) - Vehicles With: 5-Speed Manual Transmission – MT75
Clutch Slave Cylinder (33.35.01) - Vehicles With: 6-Speed Manual Transaxle – MMT6

308-03: Manual Transmission/Transaxle
Specification
Description and Operation
Manual Transaxle - Vehicles With: 5-Speed Manual Transmission - MT75
Manual Transaxle - Vehicles With: 6-Speed Manual Transaxle - MMT6
Diagnosis and Testing
Manual Transaxle
General Procedures
Transaxle Draining and Filling (44.24.02) - Vehicles With: 5-Speed Manual Transmission - MT75
Transaxle Draining and Filling (44.24.02) - Vehicles With: 6-Speed Manual Transaxle - MMT6
In-Vehicle Repair
Halfshaft Seal LH
Halfshaft Seal RH
Input Shaft Seal (37.23.09)
Selector Mechanism - Vehicles With: 5-Speed Manual Transmission - MT75
Selector Mechanism - Vehicles With: 6-Speed Manual Transaxle - MMT6
Support Insulator (37.16.42)
Removal
Transaxle (37.20.01) - 2.0L Duratorq-TDCi
Transaxle (37.20.01) - 2.2L Duratorq-TDCi (110kW/150PS) - Puma

JagDocs.com

Transaxle (37.20.01) - 2.0L NA V6 - AJV6/2.5L NA V6 - AJV6/3.0L NA V6 - AJ27
Installation
Transaxle (37.20.01) - 2.0L Duratorq-TDCi
Transaxle (37.20.01) - 2.2L Duratorq-TDCi (110kW/150PS) - Puma
Transaxle (37.20.01) - 2.0L NA V6 - AJV6/2.5L NA V6 - AJV6/3.0L NA V6 - AJ27

308-06: Manual Transmission/Transaxle External Controls
Specification
Description and Operation
External Controls
Diagnosis and Testing
External Controls
Removal and Installation
Gearshift Cables (37.16.45) - Vehicles With: 5-Speed Manual Transmission – MT75
Gearshift Cables (37.16.45) - Vehicles With: 6-Speed Manual Transaxle - MMT6
Gearshift Lever (37.16.04) - Vehicles With: 5-Speed Manual Transmission - MT75
Gearshift Lever (37.16.04) - Vehicles With: 6-Speed Manual Transaxle - MMT6

308-07: Transfer Case
Specification
Description and Operation
Transfer Case
General Procedures
Transfer Case Draining and Filling
In-Vehicle Repair
Halfshaft Seal RH (46.10.03)
Transfer Case Rear Output Shaft Seal (46.10.04)
Removal
Transfer Case (46.10.01)
Installation
Transfer Case (46.10.01)

JagDocs.com

309: Exhaust System

309-00: Exhaust System

Specification

Description and Operation

Exhaust System

Diagnosis and Testing

Exhaust System

Removal and Installation

Catalytic Converter (17.50.05) - 2.0L Duratorq-TDCi/2.2L Duratorq-TDCi (110kW/150PS) - Puma

Catalytic Converter LH (17.50.15) - 2.0L NA V6 - AJV6/2.5L NA V6 - AJV6/3.0L NA V6 - AJ27

Catalytic Converter RH (17.50.16) - 2.0L NA V6 - AJV6/2.5L NA V6 - AJV6/3.0L NA V6 - AJ27

Diesel Particulate Filter (DPF)

Diesel Particulate Filter (DPF) Differential Pressure Sensor

Exhaust Flexible Pipe (30.10.57) - 2.0L Duratorq-TDCi/2.2L Duratorq-TDCi (110kW/150PS) - Puma

Front Muffler (30.10.18) - 2.0L Duratorq-TDCi/2.2L Duratorq-TDCi (110kW/150PS) - Puma

Front Muffler (30.10.18) - 2.0L NA V6 - AJV6/2.5L NA V6 - AJV6/3.0L NA V6 - AJ27

Muffler and Tailpipe (30.10.52) - 2.0L Duratorq-TDCi/2.2L Duratorq-TDCi (110kW/150PS) - Puma, 2.0L

Muffler and Tailpipe (30.10.52) - 2.5L NA V6 - AJV6/3.0L NA V6 - AJ27

Muffler Inlet Pipe (30.10.06) - 2.0L NA V6 - AJV6/2.5L NA V6 - AJV6/3.0L NA V6 – AJ27

Muffler Inlet Pipe (30.10.06) - Vehicles With: Diesel Particulate Filter (DPF)

310: Fuel System

310-00: Fuel System - General Information

Specification

Description and Operation

Fuel System

Diagnosis and Testing

Fuel System

JagDocs.com

General Procedures
Fuel System Pressure Check
Fuel System Pressure Release (19.50.02)
Fuel Tank Draining - 2.0L Duratorq-TDCi/2.2L Duratorq-TDCi (110kW/150PS) – Puma
Fuel Tank Draining - 2.0L NA V6 - AJV6/2.5L NA V6 - AJV6/3.0L NA V6 - AJ27
Quick Release Coupling - Push Connect
Spring Lock Couplings

310-01: Fuel Tank and Lines
Specification
Description and Operation
Fuel Tank and Lines
Diagnosis and Testing
Fuel Tank and Lines
Removal and Installation
Fuel Filter (19.25.02) - 2.0L Duratorq-TDCi/2.2L Duratorq-TDCi (110kW/150PS) – Puma
Fuel Filter (19.25.02) - 2.0L NA V6 - AJV6/2.5L NA V6 - AJV6/3.0L NA V6 - AJ27
Fuel Level Sender - 2.0L NA V6 - AJV6
Fuel Level Sender - 2.0L Duratorq-TDCi/2.2L Duratorq-TDCi (110kW/150PS) – Puma
Fuel Level Sender LH - 2.5L NA V6 - AJV6/3.0L NA V6 - AJ27
Fuel Level Sender RH - 2.5L NA V6 - AJV6/3.0L NA V6 - AJ27
Fuel Level Sensor (88.25.32) - 2.0L Duratorq-TDCi/2.2L Duratorq-TDCi (110kW/150PS) - Puma
Fuel Pump Module (19.45.08) - 2.0L NA V6 - AJV6
Fuel Pump Module (19.45.08) - 2.5L NA V6 - AJV6/3.0L NA V6 - AJ27
Fuel Tank (19.55.01) - 2.0L NA V6 - AJV6
Fuel Tank (19.55.01) - 2.0L Duratorq-TDCi/2.2L Duratorq-TDCi (110kW/150PS) – Puma
Fuel Tank (19.55.01) - 2.5L NA V6 - AJV6/3.0L NA V6 - AJ27
Fuel Tank Filler Pipe (19.55.33)
Gas Fuel Tank Pressure Sensor (19.55.31)
Fuel Transfer Pump (19.45.21)
Inertia Fuel Shutoff (IFS) Switch (18.30.35)
Fuel Tank Filler Pipe Hose

JagDocs.com

310-02: Acceleration Control
Specification
Description and Operation
Acceleration Control
Diagnosis and Testing
Acceleration Control
General Procedures
Accelerator Cable Adjustment (12.20.05) - 2.0L NA V6 - AJV6
Removal and Installation
Accelerator Cable (19.20.06) - 2.0L NA V6 - AJV6
Accelerator Pedal (19.20.01)

310-03: Speed Control
Specification
Description and Operation
Speed Control
Diagnosis and Testing
Speed Control - 2.0L NA V6 - AJV6
Speed Control - 2.5L NA V6 - AJV6/3.0L NA V6 - AJ27
Removal and Installation
Speed Control Deactivator Switch (19.75.20)
Speed Control Module (19.75.26)
Speed Control Switch (19.75.25)

4: Electrical

412: Climate Control System

412-00: Climate Control System - General Information
Specification
Description and Operation
Climate Control System
Diagnosis and Testing
Climate Control System
General Procedures
Air Conditioning (A/C) Compressor Leak Detection

JagDocs.com

Air Conditioning (A/C) System Flushing
Air Conditioning (A/C) System Recovery, Evacuation and Charging (82.30.30)
Contaminated Refrigerant Handling
Discharging and Recovery (82.30.30)
Electronic Leak Detection
Inspection and Assembly Requirements
Leak Detection
Refrigerant Oil Adding
Refrigerant System Tests

412-01: Air Distribution and Filtering
Description and Operation
Air Distribution and Filtering
Diagnosis and Testing
Air Distribution and Filtering
Removal and Installation
Center Registers (82.20.38)
Driver Side Register (82.20.39)
Front Footwell Duct LH (82.20.91)
Front Footwell Duct RH (82.20.92)
Passenger Side Register (82.20.40)
Pollen Filter (76.10.09)

412-02A: Heating and Ventilation
Specification
Description and Operation
Heating and Ventilation
Diagnosis and Testing
Heating and Ventilation
Removal and Installation
Blower Motor (82.25.66)
Evaporator Core Housing (80.20.01)
Heater Core (80.20.29)
Disassembly and Assembly
Evaporator Core Housing

JagDocs.com

412-02B: Auxiliary Heating

Specification

Description and Operation

Electric Booster Heater

Fuel Fired Booster Heater

Diagnosis and Testing

Auxiliary Heater

Fuel Fired Booster Heater

Removal and Installation

Electric Booster Heater

Fuel Fired Booster Heater

412-03: Air Conditioning

Specification

Description and Operation

Air Conditioning

Diagnosis and Testing

Air Conditioning

Removal and Installation

Air Conditioning (A/C) Compressor (82.10.20) - 2.0L NA V6 - AJV6/2.5L NA V6 – AJV6/3.0L NA V6 - AJ27

Air Conditioning (A/C) Compressor (82.10.20) - 2.0L Duratorq-TDCi/2.2L Duratorq-TDCi (110kW/150PS) - Puma

Air Conditioning (A/C) Pressure Transducer (82.10.47)

Clutch and Clutch Field Coil (82.10.25) - 2.0L NA V6 - AJV6/2.5L NA V6 – AJV6/3.0L NA V6 - AJ27

Condenser Core (82.15.07)

Evaporator Core (82.25.20)

Evaporator Core Orifice (82.25.67)

Suction Accumulator (82.17.02)

412-04: Control Components

Description and Operation

Control Components

Diagnosis and Testing

Control Components

Removal and Installation

JagDocs.com

Air Discharge Temperature Sensor (82.20.64)
Ambient Air Temperature Sensor (82.20.02)
Climate Control Assembly (82.20.07)
Defrost Vent/Register Blend Door Actuator (82.20.84)
Footwell Vent/Duct Blend Door Actuator (80.20.20 or 82.20.85)
Sunload Sensor (82.20.70)
Temperature Blend Door Actuator (82.20.86)

413: Instrumentation and Warning Systems

413-00: Instrument Cluster and Panel Illumination
Diagnosis and Testing
Instrument Cluster and Panel Illumination

413-01: Instrument Cluster
Description and Operation
Instrument Cluster
Diagnosis and Testing
Instrument Cluster
Removal and Installation
Instrument Cluster (88.20.01)

413-06: Horn
Description and Operation
Horn
Diagnosis and Testing
Horn
Removal and Installation
Horn (86.30.02) (86.30.10)
Horn Switch (86.30.01)

413-08: Information and Message Center
Description and Operation
Information and Message Center
Diagnosis and Testing
Information and Message Center

JagDocs.com

Removal and Installation
Message Center
Message Center Switch (86.66.11)

413-09: Warning Devices
Description and Operation
Warning Devices
Diagnosis and Testing
Warning Devices
General Procedures
Oil Change Indicator Reset
Removal and Installation
Low Washer Fluid Warning Indicator Switch (84.10.17)

413-13: Parking Aid
Description and Operation
Parking Aid
Diagnosis and Testing
Parking Aid
Removal and Installation
Front Parking Aid Sensor (86.62.33)
Front Parking Aid Speaker (86.54.18) (86.62.34)
Parking Aid Module (86.80.39) - 4-Door
Parking Aid Module (86.80.39) - Wagon
Rear Parking Aid Sensor (86.54.14) (86.62.01)
Rear Parking Aid Speaker (86.54.19) (86.62.02) - 4-Door
Rear Parking Aid Speaker (86.54.19) (86.62.02) - Wagon, VIN Range: D86655->E43419
Rear Parking Aid Speaker (86.54.19) (86.62.02) - Wagon, VIN Range: E43420->V99999

414: Battery and Charging System

414-00: Battery and Charging System - General Information
Description and Operation
Charging System
Battery Care

JagDocs.com

Quiescent Drain
Diagnosis and Testing
Charging System - 2.0L NA V6 - AJV6/2.5L NA V6 - AJV6/3.0L NA V6 - AJ27
Charging System - 2.0L Duratorq-TDCi/2.2L Duratorq-TDCi (110kW/150PS) – Puma
General Procedures
Battery Charging

414-01: Battery, Mounting and Cables
Specification
Description and Operation
Battery and Cables
Diagnosis and Testing
Battery
General Procedures
Battery Connect (86.15.15)
Battery Disconnect and Connect
Removal and Installation
Battery (86.15.01)
Battery Cables (86.15.32) - 2.0L NA V6 - AJV6/2.5L NA V6 - AJV6/3.0L NA V6 – AJ27
Battery Cables (86.15.32) - 2.0L Duratorq-TDCi/2.2L Duratorq-TDCi (110kW/150PS) - Puma
Battery Tray (86.15.11)

414-02: Generator and Regulator
Specification
Description and Operation
Generator
Diagnosis and Testing
Generator
Removal and Installation
Generator (86.10.02) - 2.0L NA V6 - AJV6/2.5L NA V6 - AJV6/3.0L NA V6 - AJ27
Generator (86.10.02) - 2.0L Duratorq-TDCi/2.2L Duratorq-TDCi (110kW/150PS) – Puma

JagDocs.com

415: Information and Entertainment Systems

415-00: Information and Entertainment System - General Information

Diagnosis and Testing

Audio System

415-01: Audio Unit

Description and Operation

Audio System

Diagnosis and Testing

Audio System

Removal and Installation

Audio Unit (86.50.03)

Audio Unit Amplifier (86.50.10) (86.50.36) - 4-Door

Audio Unit Amplifier (86.50.10) (86.50.36) - Wagon

Compact Disc (CD) Changer (86.50.06) - 4-Door

Compact Disc (CD) Changer (86.50.06) - Wagon

Steering Wheel Audio Controls (86.50.42)

415-02: Antenna

Specification

Description and Operation

Antenna

Diagnosis and Testing

Antenna

Removal and Installation

Antenna (86.51.17.60) - Wagon

Module

415-03: Speakers

Description and Operation

Speakers

Diagnosis and Testing

Speakers

Removal and Installation

Front Door Speaker (86.50.13)

Front Door Tweeter Speaker (86.50.63)

JagDocs.com

Parcel Shelf Speaker (86.51.06)
Rear Door Speaker (86.50.14)
Rear Door Tweeter Speaker (86.50.62)

417: Lighting

417-01: Exterior Lighting

Specification
Description and Operation
Exterior Lighting
Diagnosis and Testing
Headlamps
General Procedures
Headlamp Adjustment (86.40.18)
Removal and Installation
Ballast (86.41.52)
Front Fog Lamp (86.40.96)
Headlamp Assembly (86.41.33)
Headlamp Bulb (86.42.14) - Vehicles With: High Intensity Discharge Headlamps
Headlamp Leveling Module
Headlamp Leveling Sensor (86.42.15)
Headlamp Switch (86.65.26)
High Mounted Stoplamp (86.41.01) (86.41.32) - 4-Door
High Mounted Stoplamp (86.41.01) (86.41.32) - Wagon
Rear Lamp Assembly (86.40.70) - 4-Door
Rear Lamp Assembly (86.40.70) – Wagon

417-02: Interior Lighting

Description and Operation
Interior Lighting
Diagnosis and Testing
Interior Lighting
Removal and Installation
Front Interior Lamp (86.45.12)
Rear Interior Lamp (86.46.03)

JagDocs.com

417-04: Daytime Running Lamps (DRL)
Description and Operation
Daytime Running Lamps (DRL)
Diagnosis and Testing
Daytime Running Lamps (DRL)

418: Electrical Distribution

418-00: Module Communications Network
Description and Operation
Communications Network
Diagnosis and Testing
Communications Network - VIN Range: E96603->J28492
Communications Network - VIN Range: J28493->V99999

418-01: Module Configuration
Diagnosis and Testing
Module Configuration
General Procedures
Module Configuration

418-02: Wiring Harnesses
Description and Operation
Wiring Harness
General Procedures
Wiring Harness Repair

419: Electronic Feature Group

419-01A: Anti-Theft - Active
Description and Operation
Anti-Theft - Active
Diagnosis and Testing
Anti-Theft - Active
Removal and Installation
Anti-Theft Alarm Horn (86.52.03)

JagDocs.com

419-01B: Anti-Theft - Passive

Description and Operation

Anti-Theft - Passive

Diagnosis and Testing

Anti-Theft - Passive

General Procedures

Anti-Theft Security Access

Key Programming Using Diagnostic Equipment

Removal and Installation

Passive Anti-Theft System (PATS) Transceiver (86.52.30)

419-02: Remote Convenience

Description and Operation

Universal Transmitter

Diagnosis and Testing

Universal Transmitter

General Procedures

Universal Transmitter Programming

419-07: Navigation System

Description and Operation

Navigation System

Diagnosis and Testing

Navigation System

Removal and Installation

Navigation System Antenna (86.62.06) - 4-Door, VIN Range: E96603->J39905

Navigation System Antenna (86.62.06) - 4-Door, VIN Range: J39906->V99999

Navigation System Antenna (86.62.06) - Wagon

Navigation System Display Module (86.62.07)

Navigation System Module (86.62.05) - 4-Door

Navigation System Module (86.62.05) – Wagon

419-08: Cellular Phone

Specification

Description and Operation

Cellular Phone

Diagnosis and Testing

JagDocs.com

Cellular Phone
Cellular Phone - Vehicles With: Bluetooth
Removal and Installation
Bluetooth Module
Handset Holder (86.51.12)
Module - 4-Door
Module – Wagon

419-10: Multifunction Electronic Modules
Specification
Description and Operation
Module Controlled Functions
Diagnosis and Testing
Multifunction Electronic Module
Removal and Installation
Generic Electronic Module (GEM) (86.55.75) (86.80.38)
Multifunction Voice Activated Module (86.53.13) (86.80.40) - 4-Door
Multifunction Voice Activated Module (86.53.13) (86.80.40) – Wagon

5: Body and Paint

501: Body and Paint

501-02: Front End Body Panels
Description and Operation
Front End Body Panels
Removal and Installation
Air Deflector (76.11.41) - 2.0L Duratorq-TDCi/2.2L Duratorq-TDCi (110kW/150PS) - Puma
Cowl Vent Screen (76.10.01)
Fender Splash Shield (76.10.90)
Radiator Splash Shield (76.22.90)

501-03: Body Closures
Specification
Description and Operation
Body Closures
JagDocs.com

General Procedures
Door Alignment
Hood Alignment (76.16.02)
Liftgate Alignment (76.19.54.60)
Luggage Compartment Lid Alignment (76.19.03)
Removal and Installation
Weatherstrip

501-05: Interior Trim and Ornamentation
Specification
Description and Operation
Interior Trim
Removal and Installation
A-Pillar Trim Panel (76.13.31)
B-Pillar Lower Trim Panel (76.13.29)
B-Pillar Upper Trim Panel (76.13.28)
Cowl Side Trim Panel (76.13.30)
C-Pillar Trim Panel (76.13.73) - 4-Door
C-Pillar Trim Panel (76.13.73) - Wagon
D-Pillar Trim Panel (76.13.73.60)
Front Door Trim Panel (76.34.01)
Front Scuff Plate Trim Panel (76.13.81)
Headliner (76.64.01) - 4-Door
Headliner (76.64.01) - Wagon
Liftgate Trim Panel (76.19.65.60)
Loadspace Scuff Plate Trim Panel (76.19.90.60)
Loadspace Trim Panel (76.13.73.60)
Parcel Shelf (76.67.06)
Rear Door Trim Panel (76.34.04)
Rear Scuff Plate Trim Panel (76.13.82)
Rear Window Blind (76.14.04)
Sun Visor (76.10.48)

501-08: Exterior Trim and Ornamentation
Specification
Description and Operation
Exterior Trim

JagDocs.com

Removal and Installation
Door Moulding (76.43.72)
Liftgate Moulding (76.43.79)
Radiator Grille (76.55.03)
Rear Spoiler (76.19.86.60) - Wagon
Rocker Panel Moulding (76.11.36)
Roof Rail (76.43.86.60)
Window Moulding (76.43.20)

501-09: Rear View Mirrors
Specification
Description and Operation
Rear View Mirrors
Diagnosis and Testing
Rear View Mirrors
Removal and Installation
Auto-Dimming Interior Mirror (76.10.56)
Exterior Mirror (76.10.52)
Exterior Mirror Control Switch (86.65.75)
Exterior Mirror Cover (76.10.55)
Exterior Mirror Glass (76.10.53)
Exterior Mirror Motor (76.10.57) (76.11.09)
Interior Mirror (76.10.51)

501-10: Seating
Specification
Description and Operation
Seats
Diagnosis and Testing
Seats
Removal and Installation
Front Seat (76.70.01)
Front Seat Backrest (76.70.06)
Front Seat Cushion (76.70.11)
Front Seat Front Height Adjustment Motor (86.75.31)
Front Seat Rear Height Adjustment Motor (86.75.32)
Front Seat Recliner Motor (86.75.04)

JagDocs.com

Front Seat Track Motor (86.75.33)
Lumbar Assembly (86.75.12)
Rear Seat Backrest (76.70.38) - 4-Door
Rear Seat Backrest (76.70.38) - 4-Door, Vehicles With: 70/30 Split Seat
Rear Seat Backrest (76.70.38) - Wagon, Vehicles With: 70/30 Split Seat
Rear Seat Backrest Latch (76.70.62.60) - Wagon
Rear Seat Bolster (76.70.67) - 4-Door
Rear Seat Bolster (76.70.67) - Wagon
Rear Seat Cushion (76.70.37)
Seat Base (76.70.08)
Seat Control Switch (86.75.23)
Disassembly and Assembly
Front Seat Backrest (76.70.23)
Front Seat Cushion (76.70.34)
Rear Seat Backrest (76.70.48) - 4-Door, Vehicles With: 70/30 Split Seat
Rear Seat Backrest (76.70.48) - Wagon, Vehicles With: 70/30 Split Seat
Rear Seat Backrest (76.70.48)
Rear Seat Bolster
Rear Seat Cushion (76.70.47)

501-11: Glass, Frames and Mechanisms
Specification
Description and Operation
Glass, Frames and Mechanisms
Diagnosis and Testing
Glass, Frames and Mechanisms
General Procedures
Door Window Motor Initialization
Liftgate Window Glass Adjustment
Removal and Installation
Front Door Window Glass (76.31.01)
Front Door Window Regulator and Motor (76.31.45)
Liftgate Window Glass (76.31.22) (76.81.11.60)
Rear Door Fixed Window Glass
Rear Door Window Glass (76.31.02)
Rear Door Window Regulator (76.31.46)
Rear Door Window Regulator and Motor (86.25.09)

JagDocs.com

Rear Quarter Window Glass (76.31.31)
Rear Window Glass Using Cheese Wire (76.81.41)
Rear Window Glass Using Cutting Tool
Window Control Switch (86.25.08)
Windshield Glass Using Cheese Wire (76.81.40)
Windshield Glass Using Cutting Tool (76.81.01)

501-12: Instrument Panel and Console
Description and Operation
Instrument Panel
Removal and Installation
Floor Console (76.25.01)
Instrument Panel (76.46.01)
Overhead Console (76.13.69)
Overhead Console Switch Moulding

501-14: Handles, Locks, Latches and Entry Systems
Specification
Description and Operation
Handles, Locks, Latches and Entry Systems
Diagnosis and Testing
Locks, Latches and Entry Systems
General Procedures
Remote Transmitter Programming
Removal and Installation
Exterior Front Door Handle (76.58.01)
Front Door Lock Actuator (76.37.74)
Front Door Lock Cylinder (76.37.71)
Fuel Filler Door Release Handle and Cable (76.11.39) - 4-Door
Fuel Filler Door Release Handle and Cable (76.11.39) - Wagon
Liftgate Latch Actuator (86.25.65.60)
Liftgate Window Glass Release Switch (76.19.59.60)
Luggage Compartment Lid Latch Actuator (76.19.25)
Rear Door Lock Actuator (76.37.09)

JagDocs.com

501-16: Wipers and Washers

- Specification
- Description and Operation
  - Wipers and Washers
- Diagnosis and Testing
  - Wipers and Washers
- Removal and Installation
  - Headlamp Washer Pump (84.20.21)
  - Rain Sensor (84.12.10) (86.56.62)
  - Rain Sensor Module (86.56.60)
  - Rear Window Wiper Motor (84.15.48.60) (84.35.12)
  - Windshield and Rear Window Washer Pump (84.10.21.60)
  - Windshield Washer Pump (84.10.21)
  - Windshield Washer Reservoir (84.10.01) (84.10.03)
  - Windshield Wiper Motor (84.15.13)
  - Wiper Mounting Arm and Pivot Shaft (84.15.24)
  - Wiper Pivot Arm (84.15.03)

501-17: Roof Opening Panel

- Specification
- Description and Operation
  - Roof Opening Panel
- Diagnosis and Testing
  - Roof Opening Panel
- General Procedures
  - Motor Synchronization (76.82.48)
  - Roof Opening Panel Alignment
- Removal and Installation
  - Air Deflector (76.82.07)
  - Lifter Arms (76.82.57)
  - Roof Opening Panel Control Switch (86.76.05)
  - Roof Opening Panel Drain Hose (76.82.26)
  - Roof Opening Panel Frame (76.82.01)
  - Roof Opening Panel Glass (76.82.05)
  - Roof Opening Panel Motor (86.76.01)
  - Roof Opening Panel Shield (76.82.06)
  - Roof Opening Panel Weatherstrip (76.82.15)

JagDocs.com

501-19: Bumpers

Specification

Description and Operation

Bumpers

Removal and Installation

Front Bumper Cover (76.22.78)

Front Bumper Cover Insert (76.22.73)

Rear Bumper (76.22.27) (76.22.52) - 4-Door

Rear Bumper (76.22.27) (76.22.52) - Wagon

Rear Bumper Cover (76.22.74) (76.22.77) - 4-Door

Rear Bumper Cover (76.22.74) (76.22.77) - Wagon

Rear Bumper Cover Insert (76.22.75) - 4-Door

Rear Bumper Cover Insert (76.22.75) – Wagon

501-20A: Safety Belt System

Specification

Description and Operation

Safety Belt System

Diagnosis and Testing

Safety Belt System

Removal and Installation

Front Safety Belt Retractor (76.73.10)

Front Safety Belt Shoulder Height Adjuster (76.73.12)

Rear Center Safety Belt Retractor (76.73.20) - 4-Door

Rear Center Safety Belt Retractor (76.73.20) - Wagon

Rear Safety Belt Buckle (76.73.50)

Rear Safety Belt Retractor (76.73.18) - 4-Door

Rear Safety Belt Retractor (76.73.18) - Wagon

Safety Belt Buckle and Pretensioner (76.73.49)

501-20B: Supplemental Restraint System

Specification

Description and Operation

Air Bag Supplemental Restraint System (SRS)

Diagnosis and Testing

Air Bag Supplemental Restraint System (SRS)

JagDocs.com

General Procedures
Air Bag Disposal
Removal and Installation
Clockspring (86.65.92)
Crash Sensor (76.73.55)
Driver Air Bag Module (76.73.39)
Driver Lower Air Bag Module (76.73.75)
Occupant Classification Sensor (76.73.60)
Passenger Air Bag Deactivation (PAD) Indicator (76.73.58)
Passenger Air Bag Module (76.73.37)
Restraints Control Module (RCM) (76.73.48)
Seat Position Sensor (76.73.62)
Side Air Curtain Module (76.73.64) - 4-Door
Side Air Curtain Module (76.73.64) - Wagon
Side Impact Sensor (76.73.53)

502: Frame and Mounting

502-00: Uni-Body, Subframe and Mounting System
Specification
Description and Operation
Frame Assembly
General Procedures
Underbody Misalignment Check (57.65.20)
Removal and Installation
Front Subframe (76.10.05) - 2.0L NA V6 - AJV6/2.5L NA V6 - AJV6/3.0L NA V6 – AJ27
Front Subframe (76.10.05) - 2.0L Duratorq-TDCi/2.2L Duratorq-TDCi (110kW/150PS) - Puma
Front Subframe Front Bushing (60.35.51)
Front Subframe Rear Bushing (60.35.26)
Rear Axle Crossmember Bushing (64.25.02)
Rear Subframe (64.25.01)
Rear Subframe Bushing (64.25.04)

JagDocs.com

Published: 11-May-2011

General Information - About This Manual

Description and Operation

Notes, Cautions and Warnings

Throughout this manual, important information is highlighted by the use of notes, cautions and warnings. NOTES give additional information on a topic or procedure, CAUTIONS are given to prevent damage to the vehicle, and WARNINGS are given to prevent personal injury.

Published: 11-May-2011

General Information - Application and Use of Specifications

Description and Operation

Torque Specifications

Torque specifications are shown in the torque specifications chart located at the front of the relevant section.

General Information - General Service Information

Description and Operation

Repairs and Replacements

When service parts are required, it is essential that only genuine Jaguar/Daimler replacements are used.

Attention is drawn to the following points concerning repairs and the fitting of replacement parts and accessories:

- Safety features embodied in the vehicle may be impaired if other than genuine parts are fitted. In certain territories, legislation prohibits the fitting of parts which are not produced to the vehicle manufacturer's specification.
- Torque wrench setting figures given in this manual must be strictly adhered to. Locking devices, where specified, must be fitted. If the efficiency of a locking device is impaired during removal it must be renewed.
- Owners purchasing accessories while travelling abroad should make sure that the accessory and its fitted location on the vehicle conform to mandatory requirements existing in their country of origin.
- The vehicle warranty may be invalidated by the fitting of other than genuine Jaguar/Daimler parts. All Jaguar/Daimler replacements have the full backing of the factory warranty.
- Jaguar/Daimler dealers are obliged to supply only genuine service parts.

Vehicle Specifications

Purchasers are advised that the specification details set out in this manual apply to a range of vehicles and not to any specific one. For the specification of a particular vehicle, purchasers should consult their dealer.

The Manufacturer reserves the right to vary the specifications, with or without notice, and at such times and in such manner as the Manufacturer thinks fit. Major as well as minor changes may be involved, in accordance with the Manufacturer's policy of continuous improvement.

Whilst every effort is made to make sure the accuracy of the particulars contained in this manual, neither the Manufacturer nor the Dealer, by whom the manual is supplied, shall in any circumstances be held liable for any inaccuracy or the consequences thereof.

Service Repair Operation Numbering

A master index of numbered operations has been compiled for universal application to all vehicles manufactured by Jaguar Cars Ltd.

Each operation is allocated a number from the master index and cross-refers with an identical number in the Repair Operation Times schedule. The number consists of six digits arranged in three pairs.

Each maintenance procedure in this manual is described in the sequence necessary to complete the operation in the minimum time, as specified in the Repair Operation Times schedule.

References to Bank-1 and Bank-2

References to Bank-1 and Bank-2 are made with regard to the engine. When viewed from the flywheel the right-hand bank will be Bank-1 and the left-hand bank will be Bank-2.

Special Tools

Any special tools and equipment required to perform a maintenance procedure, are shown at the beginning of each procedure. When possible, illustrations are given to assist in identifying the tool needed.

Disconnecting/Connecting the Battery

Always stop the engine before disconnecting the battery negative lead and make sure the battery positive lead is isolated i.e. wrapped in a suitable cloth.

WARNING: Radio code saving devices must not be used when conducting work on Air Bag or Fuel systems. It must be noted that, when using these devices, the vehicle electrical system is still live albeit with a reduced current flow.

• NOTE: Before disconnecting the battery make sure that the radio receiver/cassette player/mini disc player and compact disc player keycodes are known and, that no data is required from the engine control module (ECM) as battery disconnection will erase any fault codes and idle/drive values held in the Keep Alive Memory (KAM). It is not necessary to disconnect or remove electronic control modules.

Always disconnect the battery before commencing repair operations which require:

- The vehicle to be jacked up
- Work on the engine
- Work underneath the vehicle
- Arc welding

Alternatively a Radio Code Saver may be used. With the battery disconnected, a Radio Code Saver will allow sufficient current to pass to maintain the radio receiver/cassette player/mini disc player and compact disc player memory, operate the clock and supply the door operated interior lights while isolating the battery in the event of a short circuit.

Reconnecting the Battery

WARNING: If the battery has been on bench charge the cells may be giving off explosive hydrogen gas. Avoid creating sparks, and if in doubt cover the vent plugs or covers with a damp cloth.

Always make sure that all electrical systems are switched OFF before reconnecting the battery to avoid causing sparks or damage to sensitive electrical equipment.

Always reconnect the battery positive lead first and the negative last, ensuring that there is a good electrical contact and the battery terminals are secure.

Restart the clock (where fitted) and set it to the correct time.

Re - enter the radio receiver/cassette player/mini disc player and compact disc player keycodes and preset' frequencies, if known.

Following reconnection of the battery, the engine should be allowed to idle until it has reached normal operating temperature as the stored idle and drive values contained within the ECM have been lost. Allow the vehicle to idle for a further three minutes. Drive the vehicle at constant speeds of approximately 48 km/h (30 mph), 64 km/h (40 mph), 80 km/h (50 mph), 96 km/h (60 mph) and 112 km/h (70 mph) for three minutes each. This may cause a driveability concern if the procedure is not carried out. This will allow the ECM to relearn idle values.

Connecting a Slave Battery Using Jump Leads

WARNING: If the slave battery has recently been charged and is gassing, cover the vent plugs or covers with a damp cloth to reduce the risk of explosion should arcing occur when connecting the jump leads.

• CAUTIONS:

A flat battery condition may have been caused by an electrical short circuit. If this condition exists there will be an apparently live circuit on the vehicle even when all normal circuits are switched off. This can cause arcing when the jump leads are connected.

Whilst it is not recommended that the vehicle is jump started, it is recognized that this may occasionally be the only practical way to mobilize a vehicle. In such an instance the discharged battery must be recharged immediately after jump starting to avoid permanent damage.

- Always make sure that the jump leads are adequate for the task. Heavy duty cables must be used.
- Always make sure that the slave battery is of the same voltage as the vehicle battery. The batteries must be connected in parallel.
- Always make sure that switchable electric circuits are switched off before connecting jump leads. This reduces the risk of sparks occurring when the final connection is made.

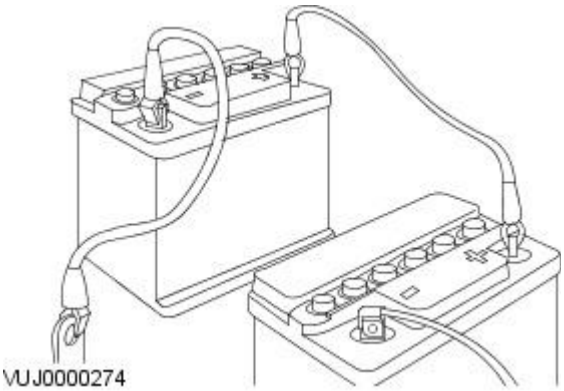

WARNING: Make sure that the ends of the jump leads do not touch each other or ground against the vehicle body at any time while the leads are attached to the battery. A fully charged battery, if shorted through jump leads, can discharge at a rate well above 1000 amps causing violent arcing and very rapid heating of the jump leads and terminals, and can even cause the battery to explode.

Always connect the jump leads in the following sequence.

- Slave battery positive first then vehicle battery positive.
- Slave battery negative next and then vehicle ground at least, 300 mm (12 in) from the battery terminal e.g. engine lifting bracket.

Always reduce the engine speed to idle before disconnecting the jump leads.

Before removing the jump leads from the vehicle that had the discharged battery, switch on the heater blower (high) or the heated rear screen, to reduce the voltage peak when the leads are removed.

Always disconnect the jump leads in the reverse order to the connecting sequence and take great care not to short the ends of the leads.

Do not rely on the alternator to restore a discharged battery. For an alternator to recharge a battery, it would take in excess of 8 hours continuous driving with no additional loads placed on the battery.

Component Cleaning

To prevent ingress of dirt, accumulations of loose dirt and greasy deposits should be removed before disconnecting or dismantling components or assemblies.

Components should be thoroughly cleaned before inspection prior to reassembly.

Cleaning Methods:

- Dry Cleaning
- Removal of loose dirt with soft or wire brushes.
- Scraping dirt off with a piece of metal or wood.
- Wiping off with a rag.

CAUTION: Compressed air is sometimes wet so use with caution, especially on hydraulic systems.

- Blowing dirt off with compressed air. (Eye protection should be worn when using this method).
- Removal of dry dust using vacuum equipment. This method should always be used to remove friction lining material dust (asbestos particles).
- Steam Cleaning

Calibration of Essential Measuring Equipment

WARNING: Failure to comply may result in personal injury or damage to components.

It is of fundamental importance that certain essential equipment e.g. torque wrenches, multimeters, exhaust gas analysers, rolling roads etc., are regularly calibrated in accordance with the manufacturers instructions.

Use of Control Modules

Control modules may only be used on the vehicle to which they were originally fitted. Do not attempt to use or test a control module on any other vehicle.

Functional Test

On completion of a maintenance procedure, a thorough test should be carried out, to make sure that the relevant vehicle systems are working correctly.

Preparation

Before disassembly, clean the surrounding area as thoroughly as possible. When components have been removed, blank off any exposed openings using grease-proof paper and masking tape. Immediately seal fuel, oil and hydraulic lines when separated, using plastic caps or plugs, to prevent loss of fluid and the entry of dirt. Close the open ends of oilways, exposed by component removal, with tapered hardwood plugs or readily visible plastic plugs. Immediately a component is removed, place it in a suitable container; use a separate container for each component and its associated parts. Before dismantling a component, clean it thoroughly with a recommended cleaning agent; check that the agent will not damage any of the materials within the component. Clean the bench and obtain marking materials, labels, containers and locking wire before dismantling a component.

Dismantling

Observe scrupulous cleanliness when dismantling components, particularly when parts of the brake, fuel or hydraulic systems are being worked on. A particle of dirt or a fragment of cloth could cause a dangerous malfunction if trapped in these systems. Clean all tapped holes, crevices, oilways and fluid passages with compressed air. Do not permit compressed air to enter an open wound. Always use eye protection when using compressed air.

Make sure that any O-rings used for sealing are correctly refitted or renewed if disturbed. Mark mating parts to make sure that they are replaced as dismantled. Whenever possible use marking materials which avoid the possibilities of causing distortion or the initiation of cracks, which could occur if a center punch or scriber were used. Wire together mating parts where necessary to prevent accidental interchange (e.g roller bearing components). Tie labels on to all parts to be renewed and to parts requiring further inspection before being passed for reassembly. Place labelled parts and other parts for rebuild in separate containers. Do not discard a part which is due for renewal until it has been compared with the new part, to make sure that the correct part has been obtained.

Inspection

Before inspecting a component for wear or performing a dimensional check, make sure that it is absolutely clean; a slight smear of grease can conceal an incipient failure. When a component is to be checked dimensionally against figures quoted for it, use the correct equipment (surface plates, micrometers, dial gauges etc.) in serviceable condition. The use of makeshift equipment can be dangerous. Reject a component if its dimensions are outside the limits quoted, or if damage is apparent. A part may be refitted if its critical dimension is exactly to the limit size and it is otherwise satisfactory. Use Plastigauge 12 Type PG-1 for checking bearing surface clearance, e.g. big end bearing shell to crank journal. Instructions for the use of Plastigauge and a scale giving bearing clearances in steps of 0,0025 mm (0.0001 in) are supplied with the package.

On-Board Diagnostics (OBD)

This vehicle uses programmed electronic control systems to provide engine management and emission regulation, automatic transmission operation and anti-lock braking control. These control systems are integral with the On-Board Diagnostics (OBD) facility which is used in conjunction with either the Jaguar approved diagnostic system or the more restricted scan tools.

The OBD information in this manual provides diagnostic and rectification procedures for emission related electrical and mechanical systems. The information is intended to facilitate fault diagnosis and the subsequent rectification of the vehicle without recourse to the Jaguar approved diagnostic system.

The manual covers the following OBD topics:

- General Information
- Engine Management System
- Automatic Transmission
- Anti-lock Braking System

Each section comprises one or more of the following sub-sections as required.

The Description and Operation sub-section includes:

- A general illustration and parts list to help the identification of the particular system or component.
- A brief description of the system operating characteristics and monitoring procedure accompanied by a component illustration.
- Additional information, where appropriate, is provided in the form of component calibrations, characteristics and cross sectional views.
- A localized circuit diagram is included to provide circuit identification, connectors, splices, fuses, wire gauge and colors. See Circuit Diagrams.

The Diagnosis and Testing sub-section is dedicated to fault analysis and rectification, and includes:

- Recommended special tools.
- Symptom chart; a chart containing all relevant Diagnostic Trouble Codes (DTC), their possible causes and an indication of the appropriate test.
- Specific pinpoint test(s), designed so that fault diagnosis can be carried out in a logical and efficient manner.

The Removal and Installation sub-section covers:

- Removal procedure(s), formatted in the recommended sequence.
- Illustrated guide to the use of special tools.
- Illustrations to support the relevant text.
- Installation procedure as above and including special recommendations for processes, lubricants and tightening torques.

Circuit Diagrams

To understand the relationship between the vehicle electrical system and the system circuit diagrams, Refer to the Electrical Guide.

In the interest of clarity, single lines may represent multiple wires. Refer to the color code (1st alpha) followed by the wire reference (numeric/alpha/numeric) to trace origin and destination.

e.g. BW 647B002. BW (black with white trace) 647 (wire reference) B002 (stage from origin).

Glossary of Terms

This glossary of terms is intended to cover mainly emissions-related (to SAE J 1930) terminology, and other abbreviations that may be used in this manual.

The required term may be looked-up in the left-hand column, and subsequent columns give the standard acronym, unit or abbreviation, and definition.

Term(s)	Acronym / Unit / Abbreviation	Definition
Accelerator Pedal	AP	
Accelerator Pedal Position Sensor	APP	Is a multitrack sensor which inputs the drivers demand into the engine control module (ECM)
After Bottom Dead Center	ABDC	Event occurring after BDC
After Top Dead Center	ATDC	Event occurring after TDC
Airbag / Supplementary Restraint System	Airbag, SRS	Airbag restraint system for driver and front seat passenger
Air Cleaner	ACL	
Air Conditioning	A/C	
Air Conditioning Control Module	A/CCM	Module controlling air conditioning, heating and ventilation
Air Conditioning Signal	ACS	Air conditioning compressor clutch operation is signalled to the ECM which induces idle speed corrections to compensate for engine load changes
Alternating current	ac	
Air Fuel Ratio	AFR	Nominally 14.7 parts air to one part fuel
Ampere	A	SI unit of current
Ampere hour	Ah	
ABS Control Module	ABS CM	System which prevents wheel lock-up under braking by sensing lack of rotation of a wheel(s) and diverting fluid pressure away from it (them)
ABS / Traction Control Control Module	ABS/TCCM	System which prevents wheel lock-up under braking by sensing lack of rotation of a wheel(s) and diverting fluid pressure away from it (them)
Atmosphere	atm	Unit of pressure (1.01325 bar)
Barometric Absolute Pressure Sensor	BARO Sensor	Sensor measuring the pressure of surrounding air at any given temperature and altitude
Battery positive voltage	B+	The positive voltage from a battery or any circuit connected directly to it
Before Bottom Dead Center	BBDC	Event occurring before BDC
Before Top Dead Center	BTDC	Event (usually ignition) occurring before TDC
Blower	BLR	Device which supplies a current of air at moderate pressure, e.g. heater or A/C blower
Body Processor Module	BPM	Control module for body electrical systems, e.g. interior lamps, windshield wash / wipe control
Bottom Dead Center	BDC	Lowest point of piston travel in a reciprocating engine
Brake horsepower	BHP	Effective horsepower developed by an engine or motor, as measured by a brake applied to its output shaft
Brake Mean Effective Pressure	BMEP	The part of the effective pressure developed in a cylinder that would result in a cylinder output equal to the bhp of the engine
Brake On/Off	BOO	Indicates the position of the brake pedal
British Standard	BS	Standard specification issued by the British Standards Institution
British Standard Automotive	BSau	
Bus	Topology of a communication network	
Bypass Air	BPA	Mechanical control of throttle bypass air
Camshaft Position Sensor	CMP Sensor	Indicates camshaft position
Canadian Motor Vehicle Safety Standard	CMVSS	
Canister Purge	CANP	Controls purging of the EVAP canister
Carbon dioxide	CO2	Colorless gas with a density of approximately 1.5 times that of air
Carbon monoxide	CO	Poisonous gas produced as the result of incomplete combustion
Case Ground	CSE GND	Control module casing ground
Catalytic converter		In-line exhaust system device used to reduce the level of engine exhaust emissions
Celsius	C	SI term for the Centigrade scale, with freezing point at zero and boiling point at 100 degrees
Central Processor Unit	CPU	The section of a computer that contains the arithmetic, logic and control circuits. It performs arithmetic operations, controls instruction processing, and provides timing signals and other housekeeping operations
Cylinder Head Temperature Sensor	CHT Sensor	A sensor for measuring the temperature of the cylinder head
Closed Loop	CL	
Closed Loop System	CL System	Control system with one or more feedback loops
Column/Mirror Control Module	C/MCM	A self-contained group of electrical /electronic components, designed as a single replaceable unit, and controlling one or more processes
Controller Area Network	CAN	A communication system which allows control modules to be linked together.
Crankshaft Position Sensor	CKP Sensor	Generates crankshaft position information in conjunction with the CKPTR (also generates speed information in certain applications)
Crankcase Ventilation System	CV	System which scavenges camshaft cover and crankcase emissions and feeds them into the inlet manifold
Cubic centimeter	cm^3	
Curb weight		Weight of vehicle with fuel, lubricants and coolant, but excluding driver, passengers or payload
Data Link Connector	DLC	Connector providing access and/or control of the vehicle information, operating conditions, and diagnostic information

Term(s)	Acronym / Unit / Abbreviation	Definition
Data Output Line	DOL	Circuit that sends certain information from the ECM to the instrument cluster
Degree	deg, °	Angle or temperature
Department of Transportation (US)	DOT	Which is a fibre optic ring network, can be diagnosed through the SCP network, and with the optical bus tester.
Deutsche Institut fur Normung	DIN	German standards regulation body
Diagnostic Module	DM	Supplemental Restraint System (non -controlling) module for diagnostics overview
Diagnostic Test Mode	DTM	A level of capability in an OBD system. May include different functional states to observe signals, a base level to read DTCs, a monitor level which includes information on signal levels, bi-directional control with on/off board aids, and the ability to interface with remote diagnosis
Diagnostic Trouble Code	DTC	An alpha/numeric identifier for a fault condition identified by the On-Board Diagnostic (OBD) system
Differential pressure		Pressure difference between two regions e.g. between intake manifold and atmospheric pressures
Differential Pressure Feedback EGR	DPFE	An EGR system that monitors differential EGR pressure across a remote orifice to control EGR flow
Direct current	dc	Current which flows in one direction only, though it may have appreciable pulsations in its magnitude
Domestic Data Bus	D2B	
Exhaust Gas Recirculation Temperature Sensor	EGRT	Sensing EGR function based on temperature change
Engine Management System	EMS	The engine management system conditions and reads inputs, supplies processing capability, and provides output drivers to control actuators as directed by software and calibration
Engine Oil Pressure	EOP	
EGR Vacuum Regulator	EVR	Controls EGR flow by changing vacuum to the EGR valve
EGR Valve Position	EVP	An EGR system that directly monitors EGR valve position to control EGR flow
Electrically Erasable Programmable Read-Only Memory	EEPROM	
Electrically Programmable Read-Only memory	EPROM	
Electronic Secondary Air Injection	EAIR	A pump-driven system for providing secondary air using an electric air pump
Engine Control Module	ECM	
Engine Coolant Level	ECL	
Engine Coolant Temperature	ECT	
ECT Sensor	ECTS	Thermistor which provides engine coolant temperature signal to the ECM to trigger enrichment circuits which increase injector 'on' time for cold start and warm-up
Engine speed	RPM	
Environmental Protection Agency	EPA	
Evaporative Emission	EVAP	System designed to prevent fuel vapor from escaping into the atmosphere. Typically includes a charcoal filled canister to absorb fuel vapor
Evaporative Emission Control Valve	EVAPP	
Exhaust Gas Recirculation	EGR	System which reduces NOx emissions by adding exhaust gases to the incoming fuel/air charge
Exhaust Gas Recirculation Solenoid Vacuum Valve	EGRS	
Exhaust Gas Recirculation Temperature Sensor	EGRT Sensor	
Exhaust Gas Recirculation Valve	EGR Valve	
Fan Control	FC	Engine cooling fan control
Federal Motor Vehicle Safety Standard (US)	FMVSS	
Figure	Fig.	Illustration reference
Flash Electrically Erasable Programmable Read-Only Memory	FEEPROM	
Flash Erasable Programmable Read-Only Memory	FEPROM	
Flywheel Sensor	CKFS	Sensor mounted so as to be triggered by each flywheel ring gear tooth to give an engine speed signal
Fuel Injection	FI	Solenoid operated devices that spray a metered quantity of fuel into the inlet ports
Fuel Pressure Regulator Control	FPRC	Controls fuel pressure regulator; used primarily to give extra fuel at cold start-up
Fuel Pump	FP	Pumps fuel from the fuel tank to the fuel injection system
Fuel Pump Monitor	FP Module	Monitors operation of fuel pump
Fuel Pump Relay	FP Relay	Relay which controls electrical current to fuel pump
Fuel rich/lean		Qualitative evaluation of air/fuel ratio based on a ratio known as stoichiometry,or 14.7:1 (Lambda)
Generic Electronic Module	GEM	
Generator	GEN	Rotating machine which converts mechanical energy into electrical energy
Gramme centimeter	gcm	
Gramme (force)	gf	
Gramme (mass)	g	
Ground	GND	Electrical conductor used as a common return for an electrical circuit or circuits, and with a relative zero potential
Hard fault		A fault currently present in the system
Headlamp	HL	

Term(s)	Acronym / Unit / Abbreviation	Definition
Heated Oxygen Sensor	HO2S	Electrically heated oxygen sensor which induces fueling corrections
Hertz (frequency)	Hz	Frequency, one cycle per second
High Mounted Stoplamp	HMSL	
High tension	HT	
Hour	hour	
Hydrocarbon	HC	
Idle Air Control	IAC	Stepper motor driven device which varies the volume of air by-passing the throttle to maintain the programmed idle speed
Ignition amplifier	IA	Device which amplifies the ignition system output
Ignition ground	IGN GND	
Injection Pressure Sensor	IPS	
Inertia Fuel Shut-off	IFS	An inertia system that shuts off the fuel supply when activated by pre-determined force limits brought about by (e.g.) collision
Inertia Fuel Shut-off Switch	IFS Switch	Shuts down fuel and ignition systems in the event of a vehicle impact
Intake air		Air drawn through a cleaner and distributed to each cylinder for use in combustion
Intake Air Temperature	IAT	Temperature of intake air
Intake Air Temperature Sensor	IAT Sensor	Device used to measure IAT
Intake Air Temperature Sensor Ignition	IAT Sensor Ignition	Thermistor which signals the ECM to retard the ignition timing in response to high inlet air temperatures
Intake Air Temperature Sensor Injection	IAT Sensor Injection	Thermistor which inputs air density information to the ECM
Internal diameter	i.dia	
International Standards Organisation	ISO	
Kilogramme (mass)	kg	
Kilogramme (force)	kgf	
Kilogramme force per square centimeter	kgf/cm^2	
Kilometer	km	
Kilometer per hour	km/h	
Kilopascal	kPa	
Kilovolt	kV	
Knock Sensor	KS	Sensor which detects the onset of detonation, and signals the ECM to retard the ignition
Left-hand	LH	
Left-hand drive vehicle	LHD	
Left-hand thread	LHthd	
Liquid Crystal Display	LCD	Optical digital display system, applied voltage to which varies the way the crystals reflect light, thereby modifying the display
Litre	L	
Low Tension	LT	Primary circuit of the ignition system, linking the battery to the primary winding in the ignition coil
Malfunction Indicator Lamp	MIL	A required on-board indicator to alert the driver of an emission related malfunction
Manifold Absolute Pressure	MAP	Absolute pressure of the intake manifold air
Manifold Absolute Pressure Sensor	MAP Sensor	Sensor located in the ECM and ported to the intake manifold
Manifold Surface Temperature	MST	
Mass Air Flow	MAF	System which provides information on the mass flow rate of the intake air to the engine
Mass Air Flow Sensor	MAF Sensor	Hot-wire sensor which monitors air flow into the intake manifold for fueling and ignition control
Maximum	max.	
Meter (measurement)	m	
Metric (screw thread, e.g. M8)	M	
Microfarad	MFD	Unit of electrical capacitance, one millionth of a farad
Millimeter	mm	
Millimeter of mercury	mmHg	
Millisecond	ms	
Minimum	min.	
Minute	minute	
Model year	MY	
Motorized In-Car Aspirator	MIA	Device which constantly samples cabin temperature by passing air over a sensor, and communicates with the A/CCM to modify A/C system performance to suit
Multi Protocol Adapter	MPA	An interpreter for the various data languages present on a vehicle
National Institute of Occupational Safety and Health (US)	NIOSH	
Newton	N	SI unit of force. 1 N = 0.2248 pounds force
Newton Meter	Nm	SI unit of torque. Must not be confused with nm (nanometer)
Nox		Compounds of nitrogen and oxygen formed at high temperatures. Major source of exhaust-gas air pollution
Non-Volatile Random Access Memory	NVRAM	RAM which retains memory even if power supply is interrupted
Normally aspirated	N/A	Fueling system using intake air at atmospheric pressure; not supercharged or turbocharged
Normally Closed	NC	
Normally Open	NO	
North American Specification	NAS	Vehicles for sale in the USA and Canadian markets
Number	No.	
Occupational Safety and Health Administration (US)	OSHA	

Term(s)	Acronym / Unit / Abbreviation	Definition
On-Board Diagnostic	OBD	A system that monitors some or all computer input and output control signals. Signal(s) outside the pre-determined limits imply a fault in the system or a related system
Original Equipment Manufacturer	OEM	
Outside Diameter	o. dia	
Oxides of nitrogen	Nox	
Oxygen Sensor	O2S	A sensor which detects oxygen content in the exhaust gases
Parameter Identification	PID	An index number referring to a parameter within a module without knowledge of its storage location
Park Neutral Position	PNP	
Park Neutral Position Switch	PNP Switch	Indicates the selected non-drive modes of the (automatic) transmission
Part number	part no.	
Pulse Width Modulated	PWM	
Programmable Electronic Control Units System	PECUS	Process whereby a common ECM is programmed on the production line to suit the market requirements of a particular vehicle
Programmable Read-only Memory	PROM	ROM with some provision for setting the stored data after manufacture
Random Access Memory	RAM	Fast access memory store which is accessible for entry or extraction of data
Read-Only Memory	ROM	Fast access memory in which data is fixed and may not be changed
Reservoir	RES	Container, usually for oils, coolants or hydraulic fluids
Rest Of The World	ROW	
Return	RTN	A dedicated sensor ground circuit
Revolutions Per Minute	RPM	Shaft speed of a device, usually an engine or motor
Right-hand	RH	
Right-hand drive	RHD	
Scan Tool	ST	Device that interfaces with and communicates information on a data link
Seat Control Module	SCM	Module controlling the seat motor systems (not electric raise/lower-only seats)
Secondary Air		Air provided to the exhaust system
Secondary Air	AIR	System used for a period of time each time the engine is started, unless certain temperature criteria are met. Pumps air directly into the exhaust system which generates extra heat and reduces the time taken for the catalytic converters to reach operating temperature
Secondary Air Injection Bypass	AIR Bypass	Vents secondary air to atmosphere
Secondary Air Injection Check Valve	AIR Check Valve	Valve which prevents back-flow of exhaust gas to the AIR system when the system is inoperative
Secondary Air Injection Diverter	AIR Diverter	Diverts secondary air to either the catalyst or exhaust manifold
Secondary Air Injection Magnetic Clutch	AIR Clutch	Clutch mounted on the AIRP drive shaft
Secondary Air Injection Pump	AIR Pump	Mechanically driven rotary vane pump, driven through the AIRPC
Secondary Air Injection Relay	AIR Relay	Controls the injection of air into the exhaust system
Secondary Air Injection Switching Valve	AIR Switching Valve	Vacuum operated valve backing-up the AIRC
Security & Locking Control Module	SLCM	Module controlling the vehicle's security and closure-locking functions
Sensor	S	Generic name for a device that senses either the absolute value or a change in a physical quantity such as temperature, pressure or flow rate, and converts that change into an electrical quantity signal
Service Repair Operation (number)	SRO	Number generated by Jaguar Methods & Techniques system which relates to the time allowed to complete a repair operation. Further information on the system can be found in the separate Jaguar Publications (for each model range) entitled 'Repair Operation Times'
Shift Solenoid	SS	Controls shifting in an automatic transmission
Signal return	SIG RTN	
Sliding Roof Control Module	SRCM	
Society of Automotive Engineers	SAE	
Speed Control Control Module	SCCM	Module controlling Speed Control System
Square centimeter	cm^2	
Standard	std	
Standard Corporate Protocol	SCP	A high-speed, serial communications system linking all body system control modules. Control messages and data are passed between modules at up to 786 messages per second
Supercharger	SC	An intake system which utilizes a supercharger (mechanically driven device that pressurizes intake air, thereby increasing density of charge air and the consequent power output from a given displacement)
Supercharger Bypass	SCB	
Tachometer	TACH	A circuit that provides input for an electronic tachometer display
Thermal Vacuum Valve	TVV	Controls vacuum levels or routing based on temperature
Throttle Body	TB	Device containing the throttle
Throttle Position	TP	
Throttle Position Sensor	TP Sensor	Interprets throttle position and movement to identify idle, acceleration and full-power demands
Throttle Manifold Absolute Pressure Sensor	TMAP	Combines the inlet air temperature and manifold pressure sensor in one component
Top Dead Center	TDC	
Torque Converter Clutch	TCC	
Transmission Control Module	TCM	Controls the shifting pattern of the (automatic) transmission
Transmission Control Switch	TCS	Modifies the operation of electronically controlled transmissions

Term(s)	Acronym / Unit / Abbreviation	Definition
Transmission Oil Temperature	TOT	Indicates temperature of transmission fluid
Transmission Range	TR	The range in which the transmission is operating
Turbine Shaft Speed	TSS	Indicates rotational speed of transmission output shaft or turbine shaft
Vacuum Solenoid Valve	VSV	Vacuum operated valve used in the speed control system
Vacuum Solenoid Valve (atm)	VSV(VA)	Vacuum atmospheric valve used in the speed control system
Vacuum Solenoid Valve (rel)	VSV(VR)	Vacuum release valve used in the speed control system
Vacuum Solenoid Valve (vac)	VSV(VV)	Vacuum valve used in the speed control system
Variable Valve Timing	VVT	A system by which the relationship of the crankshaft and camshaft may be altered during engine running
Vehicle Battery Adapter	VBA	Provides electrical power to the Jaguar approved diagnostic system and supplies a battery reference level
Vehicle Control Monitor	VCM	Instrument panel display which warns of faults
Vehicle Emission Control Information Label	VECI Label	
Vehicle Identification Number	VIN	Number assigned to the vehicle by the manufacturer, primarily for licensing and identification purposes
Vehicle Interface Adapter	VIA	Extends the Jaguar approved diagnostic system capability and provides a parallel interface to vehicle harnesses and ECMs
Vehicle Speed Sensor	VSS	Sensor which provides vehicle speed information
Viscosity Index	VI	
Voltage Regulator	VR	Device which regulates the variable output voltage of a generator
Watt	W	SI unit of power (1 hp = 745.7 watts)
Wide Open Throttle	WOT	Full throttle position

General Information - Health and Safety Precautions

Description and Operation

Prolonged and repeated contact with mineral oil will result in the removal of natural oils from the skin, leading to dryness, irritation and dermatitis. In addition, used engine oil contains potentially harmful contaminants which may cause skin cancer. Washing facilities and adequate means of skin protection should be provided.

Observe these recommendations:

- Wear protective clothing, including impervious gloves where practicable.
- Do not put oily rags in pockets. Avoid contaminating clothes, particularly underwear, with oil.
- Overalls must be cleaned regularly. Discard oil impregnated clothing and footwear which cannot be washed or cleaned.
- First Aid treatment should be obtained immediately for open cuts or wounds.
- Use barrier creams, applying before each work period, to enable easier removal of dirty oil and grease from the skin.
- Wash with soap and water to make sure that all oil is removed (skin cleaner and a nail brush will help). The use of preparations containing lanolin will help to replace the natural skin oils which have been removed.
- Do not use petrol, kerosene, gas oil, thinners or solvents for washing skin.
- If skin disorders develop, obtain medical advice immediately.
- Where practical, degrease components prior to handling.
- Where there is a risk of fluids coming into contact with the eyes, eye protection should be worn, for example, goggles or a face shield. An eye wash facility should be provided.

The Health and Safety Precautions subsection refers to some commonly used chemicals and materials, hazards associated with their use, and safety measures to be taken. Some of these chemicals may be included in the following list either in their own right or as an ingredient in a sealer or adhesive.

Acids and Alkalis

See also Battery Acids.

e.g. caustic soda, sulphuric acid.

Used in batteries and cleaning materials.

Irritant and corrosive to the skin, eyes, nose and throat. Cause burns. Can destroy ordinary protective clothing.

Avoid splashes to the skin, eyes and clothing. Wear suitable protective impervious apron, gloves and goggles. Do not breath mists.

Ensure access to eye wash bottles, shower and soap are readily available for splashing accidents.

Display Eye Hazard sign.

Air Bags

See also Fire, Chemical Materials - General

Highly flammable, explosive – observe No Smoking policy.

Used as a safety restraint system mounted in the steering wheel.

The inflator contains a high - energetic propellant which, when ignited, produces a VERY HOT GAS (2500º C).

The gas generant used in air bags is Sodium Azide. This material is hermetically sealed in the module and is completely consumed during deployment. No attempt should be made to open an air bag inflator as this will lead to the risk of exposure to Sodium Azide. If a gas generator is ruptured, full protective clothing should be worn when dealing with the spillage.

After normal deployment, gloves and safety goggles should be worn during the handling process.

Deployed air bags should be disposed of in a plastic bag in accordance with local regulations at an approved chemical waste site.

Following any direct contact with gas generant.

- Wash affected areas thoroughly with water.
- Seek medical assistance if necessary.

Air Bags - Do's

- Do store in an airbag safe when not fitted to the vehicle.
- Do store modules in an upright position.
- Do keep modules dry.
- Do carry modules with the cover side pointing away from the body.
- Do place modules with their cover side upwards.
- Do carefully inspect modules for damage.
- Do stand to one side when connecting modules.
- Do make sure all test equipment is properly calibrated and maintained.
- Do wash you hands after handling deployed air bags.

Air Bags - Do Nots

- Do not store highly flammable material together with modules or gas generators.
- Do not store gas generators at temperatures exceeding 80º C.
- Do not store modules upside down.
- Do not attempt to open a gas generator housing.
- Do not expose gas generators to open flame or sources of heat.
- Do not place anything on top of a module cover.
- Do not use damaged modules.
- Do not touch a fired module or gas generator for at least 10 minutes.
- Do not use any electrical probes on the wiring circuit.

Air Conditioning Refrigerant

See also Chlorofluorocarbon, Chemical Materials

Highly flammable, combustible – observe No Smoking policy.

Skin contact may result in frostbite.

Instructions given by the manufacturer must be followed. Avoid naked lights, wear suitable protective gloves and goggles.

If refrigerant comes into contact with the skin or eyes, rinse the affected areas with water immediately. Eyes should also be rinsed with an appropriate irrigation solution and should not be rubbed. SEEK MEDICAL ASSISTANCE IF NECESSARY.

Air Conditioning Refrigerant - Do Nots

- Do not expose refrigerant bottles to sunlight or heat.
- Do not stand refrigerant bottles upright; when filling, hold them with the valve downwards.
- Do not expose refrigerant bottles to frost.
- Do not drop refrigerant bottles.
- Do not vent refrigerant to atmosphere under any circumstance.
- Do not mix refrigerants i.e. R12 (Freon) and R134a.

Antifreeze

See also Fire, Solvents.

e.g. isopropanol, ethylene glycol, methanol.

Highly flammable, flammable, combustible.

Used in vehicle coolant systems, brake air pressure systems, screenwash solutions.

Vapors may be given off from coolant antifreeze (glycol) when heated. Avoid breathing these vapors.

Antifreeze may be absorbed through the skin in toxic or harmful quantities. Antifreeze, if swallowed can be fatal and medical attention should be sought immediately.

These products must not be used in any cooling or industrial water system which is connected or linked to general, food preparation or drinking water supplies.

Asbestos

Used in brake and clutch linings, transmission brake bands and gaskets. Jaguar original production and replacement items are asbestos free.

See also Warning Symbols on Vehicles at the end of this subsection.

Breathing asbestos dust may cause lung damage or, in some cases, cancer.

The use of drum cleaning units, vacuum cleaning or damp wiping is preferred.

Asbestos dust waste should be dampened, placed in a sealed container and marked to make sure safe disposal. If any cutting or drilling is attempted on materials containing asbestos the item should be dampened and only hand tools or low speed power tools used.

Battery Acids

See also Acids and Alkalis.

Gases released during charging are explosive. Never use naked flames or allow sparks near charging or recently charged batteries.

Ensure adequate ventilation.

Brake and Clutch Linings and Pads

See Asbestos.

Brakes Fluids (Polyalkylene Glycols)

See also Fire.

Splashes to the skin and eyes may cause irritation. Avoid skin and eye contact as far as possible. Inhalation vapor hazards do not arise at ambient temperatures because of the very low vapor pressure.

Brazing

See Welding.

Chemical Materials

See also Legal Aspects.

Chemical materials such as solvents, sealers, adhesives, paints, resin foams, battery acids, antifreeze, brake fluids, fuels, oils and grease should always be used with caution and stored and handled with care. They may be toxic, harmful, corrosive, irritant or highly flammable and give rise to hazardous fumes and dusts.

The effects of excessive exposure to chemicals may be immediate or delayed; briefly experienced or permanent; cumulative; superficial; life threatening; or may reduce life - expectancy.

Chemical Materials - Do's

- Do carefully read and observe hazard and precaution warnings given on material containers (labels) and in any accompanying leaflets, posters or other instructions. Material health and safety data sheets can be obtained from manufacturers.
- Do remove chemical materials from the skin and clothing as soon as practical after soiling. Change heavily soiled clothing and have it cleaned.
- Do organise work practices and protective clothing to avoid soiling of the skin and eyes, breathing vapors, aerosols, dusts or fumes, inadequate container labelling fire and explosion hazards.

- Do wash before breaks, before eating, smoking, drinking or using toilet facilities when handling chemical materials.
- Do keep work areas clean, uncluttered and free of spills.
- Do store chemical materials according to national and local regulations.
- Do keep chemical materials out of the reach of children.

Chemical Materials - Do Nots

- Do not mix chemical materials except under the manufacturer's instructions; some chemicals can form other toxic or harmful chemicals, give off toxic or harmful fumes or become explosive when mixed together.
- Do not spray chemical materials, particularly those based on solvents, in confined spaces e.g. when people are inside a vehicle.
- Do not apply heat or flame to chemical materials except under the manufacturer's instructions. Some are highly flammable and some may release toxic or harmful fumes.
- Do not leave containers open. Fumes given off can build up to toxic, harmful or explosive concentrations. Some fumes are heavier than air and will accumulate in confined areas, pits etc.
- Do not transfer chemical materials to unlabeled containers.
- Do not clean hands or clothing with chemicals. Chemicals, particularly solvents and fuels, will dry skin and may cause irritation leading to dermatitis or be absorbed through the skin in toxic or harmful quantities.
- Do not use emptied containers for other materials except when they have been cleaned under supervised conditions.
- Do not sniff or smell chemical materials. Brief exposure to high concentrations of fumes can be toxic or harmful.

Chlorofluorocarbons (CFC)

There is concern in the scientific community that CFCs and Halons are depleting the upper ozone layer which filters out harmful ultraviolet radiation. Decreased filtration of ultraviolet radiation may result in increases in skin cancer, cataracts and immune system suppression in humans, as well as decreased productivity of crops and aquatic systems.

CFCs are used primarily as refrigerants in vehicle air conditioning systems and as aerosol propellants. Halons are used as fire extinguishants.

Jaguar supports worldwide elimination of CFC usage and it is recommended that Company subsidiaries and affiliates should phase out CFC usage as soon as acceptable substitutes are commercially available.

Clutch Fluids

See Brake fluids.

Clutch Linings and Pads

See Asbestos.

Corrosion Protection Materials

See also Solvents, Fire.

Highly flammable, flammable – observe No Smoking policy.

These materials are varied and the manufacturer's instructions should be followed. They may contain solvents, resins, petroleum products etc. Skin and eye contact should be avoided. They should only be sprayed in conditions of adequate ventilation and not in confined spaces.

Cutting

See Welding.

Dewaxing

See Solvents and Fuels (Kerosene).

Dusts

Powder, dusts or clouds may be irritant, harmful or toxic. Avoid breathing dusts from powdery chemical materials or those arising from dry abrasion operations. Wear respiratory protection if ventilation is inadequate.

Fine dusts of combustible material can present an explosion hazard. Avoid explosive limits and/or sources of ignition.

Electric Shock

Electric shock can result from the use of faulty electrical equipment or from the misuse of equipment in good condition.

Ensure that electrical equipment is maintained in good condition and frequently tested. Faulty equipment should be labelled and preferably removed from the work station.

Ensure that flexes, cables, plugs and sockets are not frayed, kinked, cut, cracked or otherwise damaged.

Ensure that electrical equipment and flexes do not come into contact with water.

Ensure that electrical equipment is protected by the correct rated fuse.

Never misuse electrical equipment and never use equipment which is in any way faulty. The results could be fatal.

Ensure that the cables of mobile electrical equipment cannot get trapped and damaged, such as in a vehicle hoist.

Ensure that the designated electrical workers are trained in basic First Aid.

In cases of electrocution:

- Switch off the power supply before approaching the victim.
- If this is not possible push or drag the victim from the source of electricity using dry non - conductive material.
- Commence resuscitation if trained to do so.
- SUMMON MEDICAL ASSISTANCE.

Engine Oils

See Lubricants and Grease.

Exhaust Fumes

These contain asphyxiating, harmful and toxic chemicals and particles such as carbon oxides, nitrogen oxides, aldehydes, lead and aromatic hydrocarbons. Engines should be run only under conditions of adequate exhaust extraction or general ventilation and not in confined spaces.

Gasolene (petrol) engine

There may not be adequate warning of odour or of irritation before toxic or harmful effects arise. These may be immediate or delayed.

Fibre Insulation

See also Dusts.

Used in noise and sound insulation.

The fibrous nature of surfaces and cut edges can cause skin irritation. This is usually a physical and not a chemical effect.

Precautions should be taken to avoid excessive skin contact through careful organization of work practices and the use of gloves.

Fire

See also Welding, Foams, Legal Aspects.

Many of the materials found on or associated with the repair of vehicles are highly flammable. Some give off toxic or harmful fumes if burnt.

Observe strict fire safety when storing and handling flammable materials or solvents, particularly near electrical equipment or welding processes.

Ensure, before using electrical or welding equipment, that there is no fire hazard present.

Have a suitable fire extinguisher available when using welding or heating equipment.

First Aid

Apart from meeting any legal requirements it is desirable for someone in the workshop to be trained in First Aid procedures.

Splashes in the eye should be flushed carefully with clean water for at least ten minutes.

Soiled skin should be washed with soap and water.

Individuals affected by inhalation of gases, fumes etc. should be removed to fresh air immediately. If effects persist, consult a doctor.

If liquids are swallowed inadvertently, consult a doctor giving him the information on the container or label. Do not induce vomiting unless this action is indicated on the label.

Fluoroelastomer

See Viton.

Foams - Polyurethane

See also Fire.

Used in sound and noise insulation. Cured foams used in seat and trim cushioning.

Follow manufacturer's instructions.

Unreacted components are irritating and may be harmful to the skin and eyes. Wear gloves and goggles.

Individuals with chronic respiratory diseases, asthma, bronchial medical problems, or histories of allergic diseases should not work in or near uncured materials.

The components, vapors or spray mists can cause direct irritation, sensitivity reactions and may be toxic or harmful.

Vapors and spray mists must not be inhaled. These materials must be applied with adequate ventilation and respiratory protection. Do not remove the respirator immediately after spraying, wait until the vapor/mists have cleared.

Burning of the uncured components and the cured foams can generate toxic and harmful fumes. Smoking, naked flames or the use of electrical equipment during foaming operations and until vapors/mists have cleared should not be allowed. Any heat cutting of cured foams or partially cured foams should be conducted with extraction ventilation.

Freon

See Air Conditioning Refrigerant.

Fuels

See also, Fire, Legal Aspects, Chemicals and Solvents.

Avoid skin contact with fuel where possible. Should contact occur, wash the affected skin with soap and water.

Gasoline (Petrol)

Highly flammable - observe No Smoking policy.

Swallowing can result in mouth and throat irritation and absorption from the stomach can result in drowsiness and unconsciousness. Small amounts can be fatal to children. Aspiration of liquid into the lungs e.g. through vomiting, is a very serious hazard.

Gasoline dries the skin and can cause irritation and dermatitis on prolonged or repeated contact. Liquid in the eye causes severe pain.

Motor gasoline may contain appreciable quantities of benzene, which is toxic upon inhalation, and the concentration of gasoline vapors must be kept very low. High concentrations will cause eye, nose and throat irritation, nausea, headache, depression and symptoms of drunkenness. Very high concentrations will result in rapid loss of consciousness.

Ensure there is adequate ventilation when handling and using gasoline. Great care must be taken to avoid the serious consequences of inhalation in the event of vapor build up arising from spillages in confined spaces.

Special precautions apply to cleaning and maintenance operations on gasoline storage tanks.

Gasoline should not be used as a cleaning agent. It must not be siphoned by mouth. See First Aid.

Gas - oil (Diesel Fuel)

See warnings and cautions in relevant manual sections.

Combustible.

Gross or prolonged skin contact with high boiling point gas oils may also cause serious skin disorders including skin cancer.

Kerosene (Paraffin)

Used also as heating fuel, solvent and cleaning agent.

Flammable - observe No Smoking policy.

Irritation of the mouth and throat may result from swallowing. The main hazard from swallowing arises if liquid aspiration into the lungs occurs.

Liquid contact dries the skin and can cause irritation or dermatitis. Splashes in the eye may be slightly irritating.

In normal circumstances the low volatility does not give rise to harmful vapors. Exposure to mists and vapors from kerosene at elevated temperature should be avoided (mists may arise in dewaxing). Avoid skin and eye contact and make sure there is adequate ventilation.

Gas Cylinders

See also Fire.

Gases such as oxygen, acetylene, argon and propane are normally stored in cylinders at pressures of up to 13.790 kPa, (2000 lb/in2) and great care should be taken in handling these cylinders to avoid mechanical damage to them or to the valve gear attached. The contents of each cylinder should be clearly identified by appropriate markings.

Cylinders should be stored in well ventilated enclosures, and protected from ice and snow, or direct sunlight. Fuel gases (e.g. acetylene and propane) should not be stored in close proximity to oxygen cylinders.

Care should be exercised to prevent leaks from gas cylinders and lines, and to avoid sources of ignition.

Only trained personnel should undertake work involving gas cylinders.

Gases

See Gas Cylinders.

Gaskets (Fluoroelastomer)

See Viton.

General Workshop Tools and Equipment

It is essential that all tools and equipment are maintained in good condition and the correct safety equipment is used where required.

Never use tools or equipment for any purpose other than that for which they were designed. Never over – load equipment such as hoists, jacks, axle and chassis stands or lifting slings. Damage caused by overloading is not always immediately apparent and may result in a fatal failure the next time that the equipment is used.

Do not use damaged or defective tools or equipment, particularly high speed equipment such as grinding wheels. A damaged grinding wheel can disintegrate without warning and cause serious injury.

Wear suitable eye protection when using grinding, chiselling or sand blasting equipment.

Wear a suitable breathing mask when using abrasive blasting equipment, working with asbestos-based materials or using spraying equipment.

Ensure adequate ventilation to control dusts, mists and fumes.

High Pressure Air, Lubrication and Oil Test Equipment

See also Lubricants and Greases.

Always keep high pressure equipment in good condition, and regularly maintained, particularly at joints and unions.

Never direct a high pressure nozzle, e.g. diesel injector, at the skin as the fluid may penetrate to the under - lying tissue etc., and cause serious injury.

Halon

See CFCs.

Legal Aspects

Many laws and regulations make requirements relating to health and safety in the use and disposal of materials and equipment in workshops. Some of these laws which apply in the U.K. are listed. Similar laws exist for other territories:

- The Factories Act (1961).
- The Asbestos Regulations (1969).
- Highly Flammable Liquids and Liquified Petroleum Gases Regulations (1972).
- Control of Pollution Act (1974).
- Health and Safety at Work Act (1974).
- The Classification, Packaging and Labelling of Dangerous Substances Regulations (1978, 1981, 1983, 1984).
- Control of Lead at Work Regulations (1980).
- Control of Substances Hazardous to Health (COSHH) Regulations (1989).
- Abrasive Wheels Regulations (1970).
- Reporting of injuries, diseases and dangerous occurrences regulations 1985 (RIDDOR).

Workshops should be familiar, in detail, with these and associated laws and regulations.

Consult the local factory inspectorate if in any doubt.

Lubricants and Greases

Avoid all prolonged and repeated contact with mineral oils. All lubricants and greases may be irritating to the eyes and skin.

Used Engine Oil

Prolonged and repeated contact with mineral oil will result in the removal of natural oils from the skin, leading to dryness, irritation and dermatitis. In addition, used engine oil contains potentially harmful contaminants which may cause skin cancer. Adequate means of skin protection and washing facilities must be provided.

Do not employ used engine oils as lubricants or for any application where appreciable skin contact is likely to occur.

There are publications describing the problems and advising on precautionary measures. For the UK a typical Health and Safety Executive publication is: SHW 397: Cautionary Notice: Effects of mineral oil on the skin.

Health Protection Precautions

- Avoid prolonged and repeated contact with oils, particularly used engine oils.
- Wear protective clothing, including impervious gloves where practicable.
- Do not put oily rags into pockets.
- Avoid contaminating clothing.
- Heavily soiled clothing and oil - impregnated footwear should not be worn. Overalls must be cleaned regularly.
- First Aid treatment should be obtained immediately for open cuts and wounds.
- Use barrier creams, applying them before each work period, to help the removal of oil from the skin.
- Wash with soap and water to make sure all oil is removed (skin cleansers and nail brushes will help). Preparations containing lanoline replace the natural skin oils which have been removed.
- Do not use gasoline (petrol), kerosene (paraffin), diesel fuel (gas oil), thinners or solvents for cleaning skin.
- If skin disorders develop, obtain medical advice without delay.
- Where practical, degrease components prior to handling.
- Where there is a risk of eye contact, eye protection should be worn, for example, chemical goggles or face shields; in addition an eye wash facility should be provided.

Environmental Precautions

Burning used engine oil in small space heaters or boilers can be recommended only for units of approved design. In the UK the heating system must meet the requirements of HM Inspectorate of Pollution for small burners of less than 0.4 MW. If in doubt check with the appropriate local authority and/or manufacturer of approved appliances.

Dispose of used oil and used oil filters through authorized waste disposal contractors or licensed waste disposal sites, or to the waste oil reclamation trade, batterys should also be disposed off under similar arrangments. If in doubt, contact the relevant local authority for advice on disposal facilities.

It is illegal to pour used oil, antifreeze and automatic transmission fluid on to the ground, down sewers, drains, or into water courses.

Noise

Some operations may produce high noise levels which could, in time, damage hearing. In these cases, suitable ear protection must be worn.

Noise Insulation Materials

See Foams, Fibre Insulation.

0-Rings (Fluoroelastomer)

See Viton.

Paints

See also body and paint manual.

See also Solvents, Chemical Materials.

Highly flammable, flammable - observe No Smoking policy

Pressurized Equipment

See High Pressure Air, Lubrication and Oil Test Equipment.

Solder

Solders are mixtures of metals such that the melting point of the mixture is below that of the constituent metals (normally lead and tin). Solder application does not normally give rise to toxic lead fumes, provided a gas/air flame is used. Oxy - acetylene flames should not be used, as they are much hotter and will cause lead fumes to be produced.

Some fumes may be produced by the application of any flame to surfaces coated with grease etc. and inhalation of these should be

avoided.

Removal of excess solder should be undertaken with care, to make sure that fine lead dust is not produced, which can give toxic effects if inhaled. Respiratory protection may be necessary.

Solder spillage and filings should be collected and removed promptly to prevent general air contamination by lead.

High standards of personal hygiene are necessary in order to avoid ingestion of lead or inhalation of solder dust from clothing.

Solvents

See also Chemical Materials, Fuels (Kerosene), Fire.

e.g. acetone, white spirit, toluene, xylene, trichloroethane.

Used in cleaning and dewaxing materials, paints, plastics, resins, thinners etc.

Some may be highly flammable or flammable.

Skin contact will degrease the skin and may result in irritation and dermatitis following repeated or prolonged contact. Some can be absorbed through the skin in toxic or harmful quantities.

Splashes in the eye may cause severe irritation and could lead to loss of vision.

Brief exposure of high concentrations of vapors or mists will cause eye and throat irritation, drowsiness, dizziness, headaches and, in the worst circumstances, unconsciousness.

Repeated or prolonged exposure to excessive but lower concentrations of vapors or mists, for which there might not be adequate warning indications, can cause more serious toxic or harmful effects.

Aspiration into the lungs (e.g. through vomiting) is the most serious consequence of swallowing.

Avoid splashes to the skin, eyes and clothing. Wear protective gloves, goggles and clothing if necessary.

Ensure good ventilation when in use, avoid breathing fumes, vapors and spray mists and keep containers tightly sealed. Do not use in confined spaces.

When spraying materials containing solvents, e.g. paints, adhesive, coatings, use extraction ventilation or personal respiratory protection in the absence of adequate general ventilation.

Do not apply heat or flame except under specific and detailed manufacturer's instructions.

Sound Insulation

See Fibre Insulation, Foams.

Suspended Loads

CAUTION: Never improvise lifting tackle.

There is always a danger when loads are lifted or suspended. Never work under an unsupported, suspended or raised load e.g. suspended engine, etc.

Always make sure that lifting equipment such as jacks, hoists, axle stands, slings, etc., are adequate and suitable for the job, in good condition and regularly maintained.

Transmission Brake Bands

See Asbestos.

Underseal

See Corrosion Protection.

Viton

In common with many other manufacturers' vehicles, some components fitted to the Jaguar range have 'O' rings, seals or gaskets which contain a material known as 'Viton'.

Viton is a fluoroelastomer, that is a synthetic rubber type which contains Fluorine. It is commonly used for 'O' rings, gaskets and seals of all types. Although Viton is the most well known fluoroelastomer, there are others, including Fluorel and Tecmoflon.

When used under design conditions fluoroelastomers are perfectly safe. If, however, they are exposed to temperatures in excess of 400º C, the material will not burn, but will decompose, and one of the products formed is hydrofluoric acid.

This acid is extremely corrosive and may be absorbed directly, through contact, into the body.

'O' rings, seals or gaskets which have been exposed to very high temperatures will appear charred or as a black sticky substance.

DO NOT, under any circumstances touch them or the attached components.

Enquiries should be made to determine whether Viton or any other fluoroelastomer has been used in the affected 'O' ring, seal or gasket. If they are of natural rubber or nitrile there is no hazard. If in doubt, be cautious and assume that the material may be Viton or any fluoroelastomer.

If Viton or any other fluoroelastomers have been used, the affected area should be decontaminated before the commencement of work.

Disposable heavy duty plastic gloves should be worn at all times, and the affected area washed down using wire wool and a limewater (calcium hydroxide) solution to neutralize the acid before disposing of the decomposed Viton residue and final cleaning of the area. After use, the plastic gloves should be discarded carefully and safely.

Welding

See also Fire, Electric Shock, Gas Cylinders.

Welding processes include Resistance Welding (Spot Welding), Arc Welding and Gas Welding.

Resistance Welding

This process may cause particles of molten metal to be emitted at a high velocity, and the eyes and skin must be protected.

Arc Welding

This process emits a high level of ultra - violet radiation which may cause arc - eye and skin burns to the operator and to other persons nearby. Gas - shielded welding processes are particularly hazardous in this respect. Personal protection must be worn, and screens used to shield other people.

CONTACT LENS WEARERS ARE ADVISED TO REVERT TO ORDINARY SPECTACLES WHEN ARC WELDING as the arc spectrum is believed to emit microwaves which dry out the fluid between the lens and the eye. This may result in blindness when the lens is removed from the eye.

Metal spatter will also occur, and appropriate eye and skin protection is necessary.

The heat of the welding arc will produce fumes and gases from the metals being welded, the rods and from any applied coatings or contamination on the surfaces being worked on. These gases and fumes may be toxic and inhalation of these should be avoided. The use of extraction ventilation to remove the fumes from the working area may be necessary particularly in cases where the general ventilation is poor, or where considerable welding work is anticipated. In extreme cases or confined spaces where adequate ventilation cannot be provided, air-fed respirators may be necessary.

Gas Welding (and Cutting)

Oxy - acetylene torches may be used for welding and cutting, and special care must be taken to prevent leakage of these gases, with consequent risk of fire and explosion.

The process will produce metal spatter and eye and skin protection is necessary.

The flame is bright, and eye protection should be used, but the ultra - violet emission is much less than that from arc welding, and lighter filters may be used.

The process itself produces few toxic fumes, but such fumes and gases may be produced from coatings on the work, particularly during cutting away of damaged body parts, and inhalation of the fumes should be avoided.

In brazing, toxic fumes may be produced from the metals in the brazing rod, and a severe hazard may arise if brazing rods containing cadmium are used. In this event particular care must be taken to avoid inhalation of fumes and expert advice may be required.

SPECIAL PRECAUTIONS MUST BE TAKEN BEFORE ANY WELDING OR CUTTING TAKES PLACE ON VESSELS WHICH HAVE CONTAINED COMBUSTIBLE MATERIALS, E.G. BOILING OR STEAMING OUT OF FUEL TANKS.

Warning Symbols on Vehicles

Decals showing warning symbols will be found on various vehicle components.

These decals must not be removed. The warnings are for the attention of owners/operators and persons carrying out service or repair operations on the vehicle.

The most commonly found decals are reproduced below together with an explanation of the warnings.

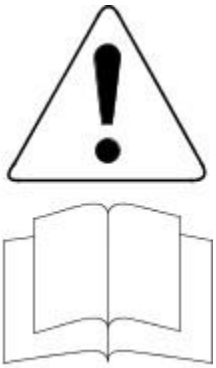

VUJ0000269

1. **1.** Components or assemblies displaying the warning triangle and open book symbol advise consultation of the relevant section of the owners handbook before touching or attempting adjustments of any kind.

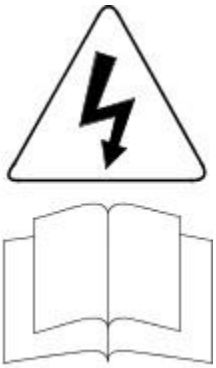

VUJ0000270

2. **2.** Components or assemblies displaying the warning triangle with the electrified arrow and open book symbol give warning of inherent high voltages. Never touch these with the engine running or the ignition switched on. See Electric Shock in this subsection.

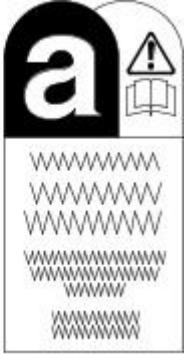

VUJ0000271

3. **3.** Jaguar vehicles and replacement parts which contain asbestos are identified by this symbol. See Asbestos in this subsection.

VUJ0000272

4. **4.** Components or assemblies displaying this symbol give warning that the component contains a corrosive substance. See Acids and Alkalis in this subsection.

VUJ0000273

5. **5.** Vehicles displaying the caution circle with a deleted lighted match symbol, caution against the use of naked lights or flames within the immediate vicinity due to the presence of highly flammable or explosive liquids or vapors. See Fire in this subsection.

VUJ0002037

6. **6.** All vehicles fitted with the passenger air bag from the factory have a warning sticker attached to the instrument panel, prohibiting the use of rear facing child seats in the front seating position. Failure to follow this instructions may result in personal injury.

White Spirit

See Solvents.

Safety Precautions

• WARNINGS:

Working on the fuel system results in fuel and fuel vapor being present in the atmosphere. Fuel vapor is extremely flammable, hence great care must be taken whilst working on the fuel system. Adhere strictly to the following precautions:

- Do not smoke in the work area.
- Display 'no smoking' signs around the area.
- Disconnect the battery before working on the fuel system.
- Do not connect/disconnect electrical circuits, use electrical equipment or other tools or engage in working practices which in any way may result in the production of sparks.
- Ensure that a CO_2 fire extinguisher is close at hand.

- Ensure that dry sand is available to soak up any fuel spillage.
- Empty fuel using suitable fire proof equipment into an authorized explosion proof container.
- Do not empty fuel while working in a workshop or a pit.
- Ensure that working area is well ventilated.
- Ensure that any work on the fuel system is only carried out by experienced and well qualified maintenance personnel.
- Ensure that fume extraction equipment is used where appropriate.

Fume extraction equipment must be in operation when solvents are used e.g. Trichloroethane, white spirit, sbp3, methylene chloride, perchlorethylene. Do not smoke in the vicinity of volatile degreasing agents.

Whenever possible, use a ramp or pit whilst working beneath a vehicle, in preference to jacking. Position chocks at the wheels as well as applying the parking brake. Never rely on a jack alone to support a vehicle. Use axle stands, or blocks carefully placed at the jacking points, to provide a rigid location. Check that any lifting equipment used has adequate capacity and is fully serviceable. Ensure that a suitable form of fire extinguisher is conveniently located. When using electrical tools and equipment, inspect the power lead for damage and check that it is properly earthed. Disconnect the earth (grounded) terminal of the vehicle battery. Do not disconnect any pipes of the air conditioning refrigeration system unless you are trained and instructed to do so. A refrigerant is used which can cause blindness if allowed to come into contact with the eyes. Ensure that adequate ventilation is provided when volatile degreasing agents are being used.

Adhere strictly to handling and safety instructions given on containers and labels. Keep oils and solvents away from naked flames and other sources of ignition. Do not apply heat in an attempt to free seized nuts or fittings; as well as causing damage to protective coatings, there is a risk of damage from stray heat to electronic equipment and brake lines. Do not leave tools, equipment, spilt oil etc. around the work area. Wear protective overalls and use barrier cream when necessary.

Environmental Protection

In some countries it is illegal to pour used oil onto the ground, down sewers or drains, or into water courses. The burning of used engine oil in small space heaters or boilers is not recommended unless emission control equipment is fitted. Dispose of used oil through authorized waste disposal contractors, to licensed waste disposal sites or to the waste oil reclamation trade. If in doubt, contact the Local Authority for advice on disposal facilities.

www.JagDocs.com

General Information - How To Use This Manual

Description and Operation

Copyright Statement

Copyright.© Jaguar Cars Ltd. 1999

All rights reserved. No part of this publication may be reproduced, stored in a retrieval system or transmitted in any form, electronic, mechanical, photocopying, recording or other means, without prior written permission of Jaguar Cars Ltd., Customer Service Department, Browns Lane, Coventry, CV5 9DR, England.

Workshop Manual Organization

This manual covers descriptive, diagnostic (including OBD), and repair aspects to service the vehicle effectively.

The manual is arranged in sections, each section dealing with a specific part of a vehicle system. For example, Section 412-03 covers air conditioning, which is part of the climate control system.

The first digit of the section number indicates the group. There are five groups:

- General Information.
- Chassis.
- Powertrain.
- Electrical.
- Body and Paint.

The second and third digits of the section number indicate the vehicle system.

The last two digits of the section number indicate the part of the system covered by the section.

Published: 11-May-2011

General Information - Important Safety Instructions

Description and Operation

Safety Notice

Appropriate service methods and correct repair procedures are essential for the safe, reliable operation of all motor vehicles, as well as the safety of the person doing the work. This manual provides general directions for accomplishing service and repair work with tested effective techniques. Following them will help assure reliability.

There are numerous variations in procedures, techniques, tools, and parts for servicing vehicles, as well as in the skill of the person doing the work. This manual cannot possibly anticipate all such variations and provide advice or cautions as to each. Accordingly, anyone who departs from the instructions provided in the manual must first establish that neither personal safety or vehicle integrity is compromised from choices of methods, tools or parts.

General Information - Road / Roller Testing

Description and Operation

Road or roller testing may be carried out for various reasons and a procedure detailing pre - test checks, through engine starting and stopping, pre - driving checks, on - test checks to final checks on completion of the test is given overleaf.

Unless complete vehicle performance is being checked, the full road test procedure need not be carried out. Instead, those items particularly relevant to the system/s being checked can be extracted.

Pre - Test Checks

WARNING: If the brake system hydraulic fluid level is low, pedal travel is excessive or a hydraulic leak is found, do not attempt to road test the vehicle until the reason for the low fluid level, excessive pedal travel or hydraulic leak is found and rectified.

It is suggested that pre - test checks, and functional tests of those systems/circuits which affect the safe and legal operations of the vehicle, such as brakes, lights and steering, should always be carried out before the road or roller test.

- Engine oil level
- Engine coolant level
- Tires, for correct pressure, compatible types and tread patterns, and wear within limits.
- There is sufficient fuel in the tank to complete the test.
- All around the engine, transmission and under the vehicle for oil, coolant, hydraulic and fuel leaks. Make a note of any apparent leaks and wipe off the surrounding areas to make it easier to identify the extent of the leak on completion of the test.

Starting the Engine

• NOTE: On initial drive away from cold and within the first 1.5 km (1 mile), do not depress accelerator pedal beyond half travel until the vehicle has attained a minimum speed of 25 km/h (15 miles/h). Never operate at high engine speed or with the accelerator pedal at full travel whilst the engine is cold.

With the ignition switched off, check:

- The handbrake is applied.
- The gear lever is in neutral.
- All instrument gauges (except fuel gauge) read zero.

With the ignition switched on, check:

- Ignition controlled warning lights come on.
- Engine temperature gauge registers a reading compatible with the engine temperature.
- Fuel gauge registers a reading appropriate to the fuel level in the tank.
- The operation of the handbrake warning light and fluid level warning indicator light.

On Road or Roller Test Check:

CAUTION: If road testing, check the brake operation while still travelling at low speed before continuing with the test. If the brakes pull to one side, or appear to be otherwise faulty, do not continue with the road test until the fault has been found and rectified.

- Clutch pedal operation is not stiff or heavy.
- Initial gear engagement is smooth and there is no evidence of clutch drag.
- Handbrake control operates smoothly and the handbrake releases quickly and completely.
- Clutch takes up the drive smoothly, without slip or judder.
- The engine power output is satisfactory, full power is achieved, acceleration is smooth and pedal operation not stiff or heavy, and engine speed returns to idle correctly.
- There is no excessive or abnormally colored smoke from the engine under normal driving, heavy load or overrun conditions.
- Steering operation, including power steering where fitted, is smooth, accurate, not excessively heavy or with excessive free play or vibration. Does not pull to one side and self centres smoothly after cornering.
- Speedometer, oil pressure warning lamp, coolant temperature gauge and tachometer (where fitted) register the correct readings or operate correctly.
- Switches and controls operate smoothly and positively, warning or indicator lights operate correctly and the direction indicator control self cancels when the steering is returned to the straight ahead position.
- Heating and ventilation systems work correctly and effectively.
- Brake operation and efficiency.

Brake Testing

WARNING: When brake testing, avoid breathing the smoke or fumes from hot brakes, this may contain asbestos dust which is hazardous to health, see Health and Safety Precautions.

Avoid brake testing on busy roads where it can cause inconvenience or danger to other road users.

CAUTION: Brake testing which includes heavy brake applications should not be carried out with new brake pads/discs or linings/drums until the components have bedded - in. New brake friction components will not reach full efficiency until the bedding - in process is complete.

Test the brakes at several speeds within the normal operating range using both light and heavy pedal pressure. Note any tendency to snatch, pull or drag, and any undue delay in application or release.

Allow the vehicle to coast and note any tendency to pull to one side, or evidence that the brakes are binding.

After stopping the vehicle (not immediately after a period of heavy braking), carefully check the brake temperature. A disc which feels hot, or appreciably hotter than the others, indicates that the brake is binding.

After completion of the test, check for:

- Oil, coolant, hydraulic, air and fuel leaks.

- Abnormal temperature of any moving components or assemblies, e.g. wheel hubs, transmission, axle etc., which might indicate overtightness or lack of lubrication.

Published: 11-May-2011

General Information - Solvents, Sealants and Adhesives

Description and Operation

WARNING: Always handle all solvents, sealers and adhesives with extreme care. Some contain chemicals or give off fumes which can be dangerous to health. Always follow the manufacturers instructions. If in doubt about any substance, particularly a solvent, DO NOT use it.

CAUTION: If in doubt about the suitability of any proprietary solvent or sealer for a particular application, contact the manufacturer of the product for information regarding storage, handling and application.

The Solvents, Sealers and Adhesives subsection refers to some commonly used chemicals and materials, hazards associated with their use, and safety measures to be taken.

Adhesives and Sealers

Highly flammable, flammable, combustible – observe No Smoking policy.

Generally should be stored in No Smoking' areas. Cleanliness and tidiness in use should be observed e.g. disposable paper covering benches; should be dispensed from applicators where possible; containers, including secondary containers, should be labelled appropriately.

Solvent - based Adhesives/Sealers - See Solvents

Follow manufacturer's instructions.

Water - based Adhesives/Sealers

Those based on polymer emulsions and rubber latexes may contain small amounts of volatile toxic and harmful chemicals. Skin and eye contact should be avoided and adequate ventilation provided during use.

Hot Melt Adhesives

In the solid state, they are safe. In the molten state they may cause burns and health hazards may arise from the inhalation of toxic fumes.

Use appropriate protective clothing and a thermostatically controlled heater with a thermal cut - out and adequate extraction.

Resin - based Adhesives/Sealers e.g. Epoxide and Formaldehyde Resin - based

Mixing should be carried out in well ventilated areas, as harmful or toxic volatile chemicals may be released.

Skin contact with uncured resins and hardeners can result in irritation, dermatitis, and absorption of toxic or harmful chemicals through the skin. Splashes can damage the eyes.

Provide adequate ventilation and avoid skin and eye contact.

Anaerobic, Cyanoacrylate (Super - glues) and other Acrylic Adhesives

Many are irritant, sensitizing or harmful to the skin and/or respiratory tract. Some are eye irritants.

Skin and eye contact should be avoided and the manufacturer's instructions followed.

Cyanoacrylate adhesives (super-glues) MUST NOT contact the skin or eyes. If skin or eye tissue is bonded, cover with a clean moist pad and seek immediate medical attention. Do not attempt to pull tissue apart. Use in well ventilated areas as vapors can cause irritation to the nose and eyes.

For two - pack systems see Resin - based and Isocyanate Adhesives/Sealers.

Isocyanate (Polyurethane) Adhesives/Sealers

See also Resin - based Adhesives

Individuals suffering from asthma or respiratory allergies should not work with or near these materials as sensitivity reactions can occur.

Over exposure is irritating to the eyes and respiratory system. Excessive concentrations may produce effects on the nervous system including drowsiness. In extreme cases, loss of consciousness may result. Long term exposure to vapor concentrations may result in adverse health effects.

Prolonged contact with the skin may lead to skin irritation and, in some cases, dermatitis.

Splashes entering the eye will cause discomfort and possible damage.

Any spraying should preferably be carried out in exhaust ventilated booths removing vapors and spray droplets from the breathing zone.

Wear appropriate gloves, eye and respiratory protection.

Published: 11-May-2011

General Information - Standard Workshop Practices

Description and Operation

Protecting the Vehicle

Always install covers to protect the fenders before commencing work in the engine compartment. Always install the interior protection kit, wear clean overalls and wash hands or wear gloves before working inside the vehicle. Avoid spilling hydraulic fluid, antifreeze or battery acid on the paintwork. In the event of spillage, wash off with water immediately. Use polythene sheets in the luggage compartment to protect carpets. Always use the recommended service tool, or a satisfactory equivalent, where specified. Protect temporarily exposed screw threads by replacing nuts or installing caps.

Vehicle in Workshop

When working on a vehicle in the workshop always make sure that:

- The parking brake is applied or the wheels are securely chocked to prevent the vehicle moving forwards or backwards
- If the engine is to be run, there is adequate ventilation, or an extraction hose to remove exhaust fumes is installed
- There is adequate room to jack up the vehicle and remove the wheels, if necessary
- Fender covers are always installed if any work is to be carried out in the engine compartment
- The battery is disconnected if working on the engine, underneath the vehicle, or if the vehicle is jacked up

CAUTION: When electric arc welding on a vehicle, always disconnect the generator wiring to prevent the possibility of a surge of current causing damage to the internal components of the generator.

- If using welding equipment on the vehicle, ensure a suitable fire extinguisher is readily available.

Identification Codes - Identification Codes

Description and Operation

Vehicle Identification Number (VIN)

The official VIN is stamped on the right hand side of the boot compartment floor. An additional quick reference and anti forgery identification number is stamped onto a metal plate and fastened to the instrument panel. It is positioned close to the left-hand side of the vehicle and is visible from the outside.

The vehicle identification number is also located on a vehicle certification label or vin plate which is mounted on the bottom of the 'B' Post.

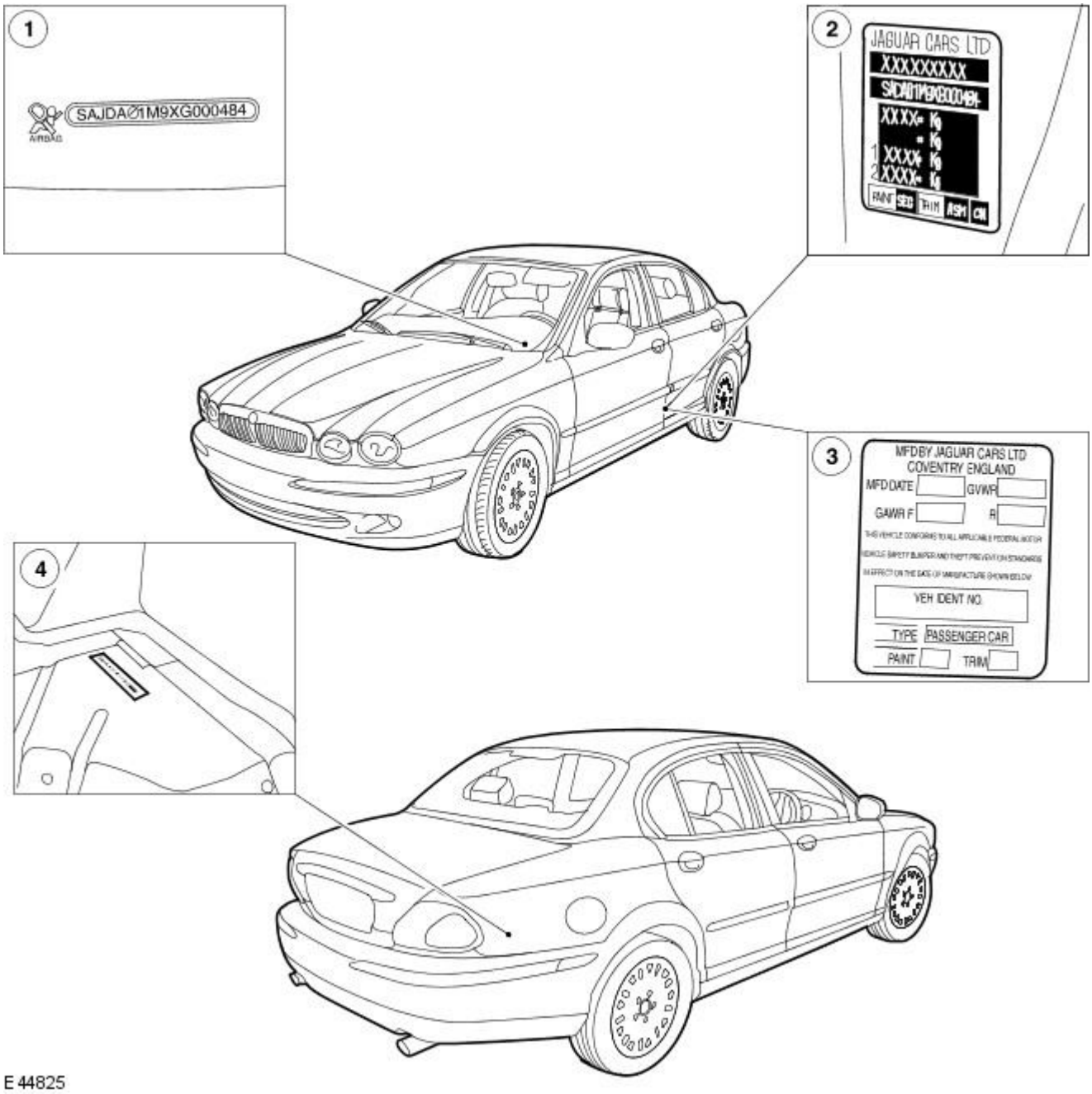

E 44825

Item	Part Number	Description
1	—	Quick reference plate
2	—	Certification label (Europe and Rest of the World)
3	—	Certification label (USA)
4	—	Official VIN plate

Vehicle Identification Number (Example)

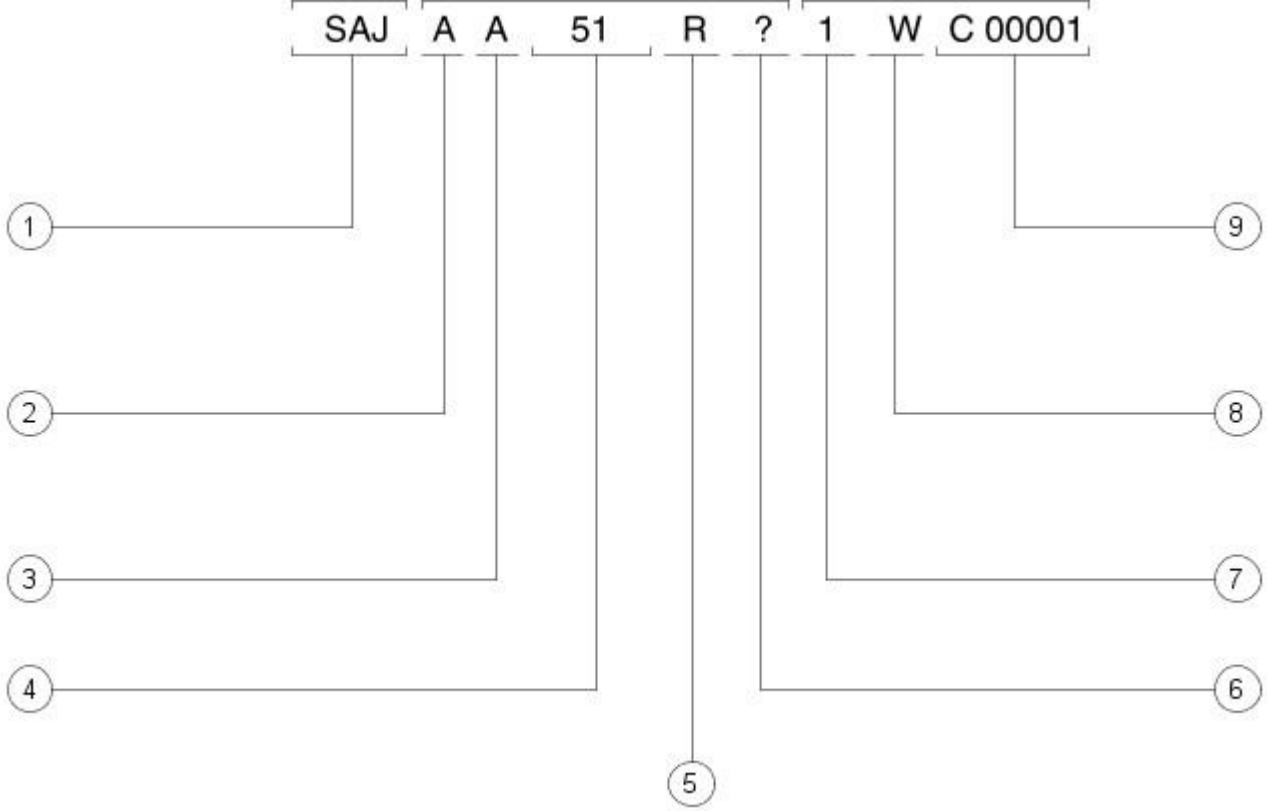

VUJ0003165

Item	Part Number	Description
1	—	World manufacturer identifier
2	—	Market, air bag specification
3	—	Transmission and steering code
4	—	Body code
5	—	Engine emission system
6	—	Check digit
7	—	Model year
8	—	Assembly plant, model line
9	—	Production sequence number

World Manufacturer Identifier

VIN Positions 1, 2 and 3

Codes	Manufacturer	Make	Type
SAJ	Jaguar Cars Limited, England	Jaguar	Passenger Car

Market, Air Bag Specification

VIN position 4

VIN code	Description
A	Rest of World with twin air bags, side air bags and curtain air bags
K	Japan with twin air bags, side air bags and curtain air bags
W	USA with twin air bags, side air bags and curtain air bags
X	Canada with twin air bags, side air bags and curtain air bags
Y	Mexico with twin air bags, side air bags and curtain air bags

Transmission, Steering Code

VIN Position 5

VIN Code	Description
A	AWD Automatic LHS
B	AWD Manual LHS
C	AWD Automatic RHS
D	AWD Manual RHS
E	FWD Automatic LHS
F	FWD Manual LHS
G	FWD Automatic RHS
H	FWD Manual RHS

Body Code

VIN Position 6 and 7

VIN Code	Description
51	4-Door, 5 seat saloon high series
52	4-Door, 5 seat saloon entry series
53	4-Door, 5 seat saloon sport series
54	5-Door, 5 seat wagon high series
55	5-Door, 5 seat wagon entry series
56	5-Door, 5 seat wagon sport series

Engine Emission System

VIN Position 8

• NOTE: *1 EU. Includes the following markets; Austria, Belgium, Cyprus, Czech Rep, Denmark, Estonia, Finland, France, Germany, Greece, Netherlands, Hungary, Italy, Latvia, Lithuania, Luxembourg, Malta, Poland, Portugal, Rep. of Ireland, Slovenia, Slovakia, Spain (including Canary Islands), Sweden, Bulgaria, Romania and UK.

• NOTE: *2 East Europe. Includes the following markets; Croatia and Serbia.

• NOTE: *3 Russia. Includes the following markets; Belarus, Kazakhstan, Ukraine and Uzbekistan.

• NOTE: *4 Middle East. Includes the following markets; Abu Dhabi, Bahrain, Dubai, Jordan, Kuwait, Lebanon, Oman, Quatar, Saudi Arabia.

VIN Code	Engine	Market
F	2.5L	Argentina, Dominican Rep, Guatemala, *4 Middle East, Panama, Uruguay, Philippines and Taiwan
E	3.0L	
N	2.0L	
M	2.5L	*2 East Europe, Morocco, *3 Russia and Chile
L	3.0L	
S	2.0L	
M	2.5L	*1 EU, Israel, Norway, Switzerland, and Turkey
L	3.0L	
N/A	2.0L	
K	2.5L	Brazil
J	3.0L	
N/A	2.0L	
H	2.5L	Egypt, Syria and South Korea
G	3.0L	
P	2.0L	
M	2.5L	Japan
L	3.0L	
S	2.0L	
N/A	2.5L	USA
A	3.0L	
N/A	2.0L	
N/A	2.5L	Canada
A	3.0L	
N/A	2.0L	
N/A	2.5L	Mexico
L	3.0L	
N/A	2.0L	
F	2.5L	Indonesia, Malaysia, Singapore, Sri Lanka and Thailand
E	3.0L	
N	2.0L	
M	2.5L	Australia, Hong Kong and New Zealand
L	3.0L	
S	2.0L	
H	2.5L	South Africa (includes Trinidad and Tobago)
G	3.0L	
P	2.0L	
M	2.5L	Cyprus, Malta and UK (and Eire)
L	3.0L	
N/A	2.0L	
1	2.0L Diesel	Argentina, *2 East Europe, *1 EU, Morocco, Norway, Switzerland, Turkey, Uruguay and *3 Russia
1	2.2L Diesel	Argentina, *2 East Europe, *1 EU (except Belgium), Morocco, Norway, Switzerland, Turkey, Uruguay and *3 Russia
2	2.2L Diesel	Belgium (110 Kw engine only)
1	2.0L Diesel	Cyprus, Malaysia, Malta, UK (and Eire), South Africa (includes Trinidad and Tobago)
1	2.2L Diesel	Cyprus, Malaysia, Malta, UK (and Eire), South Africa (includes Tobago)
3	2.2L Diesel + cDPF	*1 EU, Norway, Switzerland, and Turkey

Check Digit

VIN Position 9

VIN Code	Description
0 - 9 or X	Calculated in accordance with American standard CFR part 565

Model Year

VIN Position 10

VIN Code	Description
6	2006 Model Year
7	2007 Model Year

Assembly Plant and Model Line

VIN Position 11

VIN Code	Description
W	Halewood 3.0L
X	Halewood 2.5L
Y	Halewood 2.0L
6	Halewood 2.0L Diesel
B	Halewood 2.2L Diesel

Production Sequence Number

VIN Position 12 through 17

Sequence Number
C00001 - C99999
D00001 - D99999
E00001 - E99999
J00001 - J99999
K00001 - K99999
S00001 - S99999
T00001 - T99999
V00001 - V99999

Vehicle Certification Label

The vehicle certification label also contains the 17 character vehicle identification number. This number is used for warranty identification of the vehicle.

Vehicle Certification Number (Europe and Rest of the World)

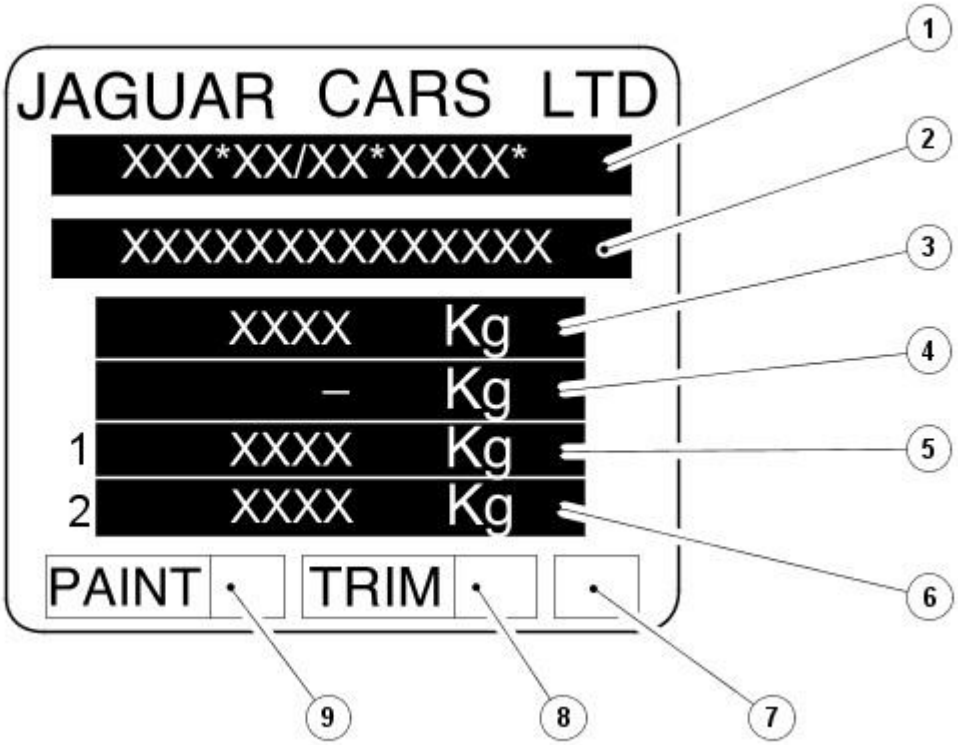

E 36533

Item	Part Number	Description
1	—	WVTA number printed here when applicable
2	—	Vehicle identification number
3	—	Gross vehicle weight
4	—	Gross train weight
5	—	Maximum permitted front axle loading
6	—	Maximum permitted rear axle loading
7	—	Date of manufacture
8	—	Interior trim code
9	—	Paint code

Vehicle Identification Label (USA)

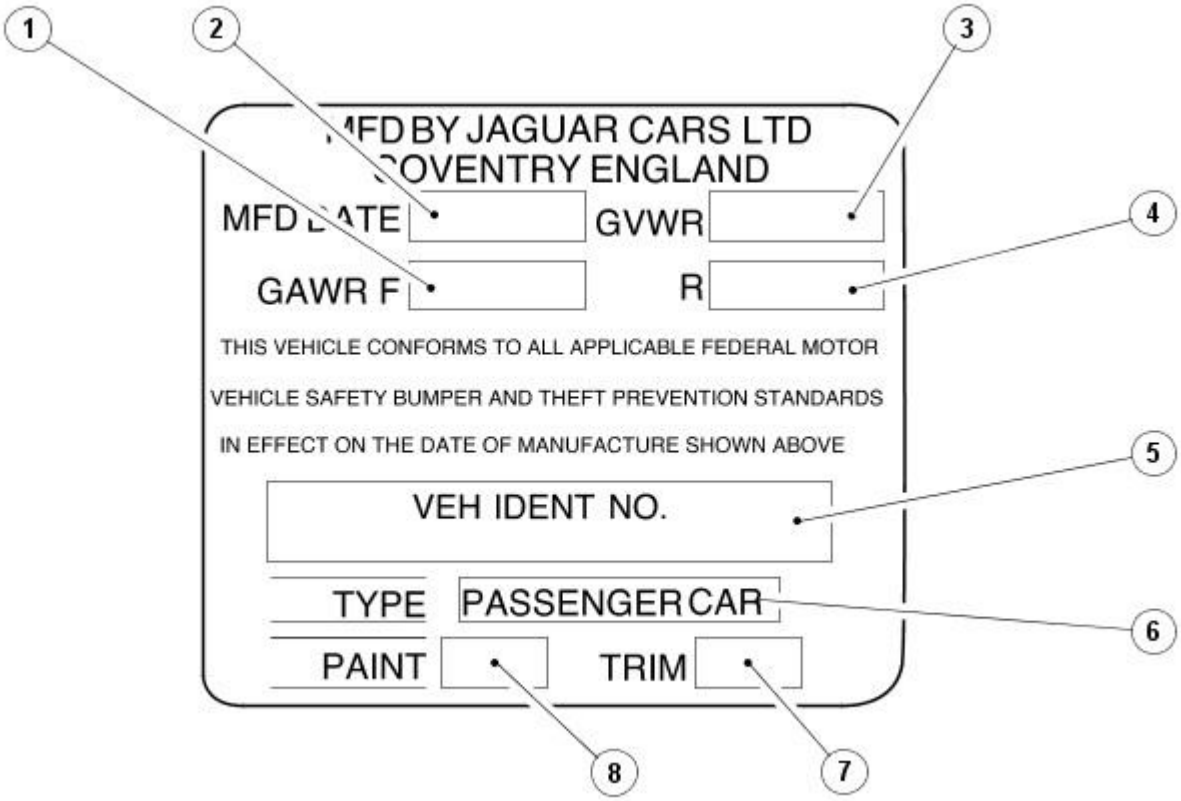

VUJ0003210

Item	Part Number	Description
1	—	Maximum permitted front axle loading
2	—	Date of manufacture
3	—	Gross vehicle weight
4	—	Maximum permitted rear axle loading
5	—	Vehicle identification number
6	—	Type
7	—	Interior trim code
8	—	Paint code

Vehicle Identification Label (Saudi Arabia and Gulf States)

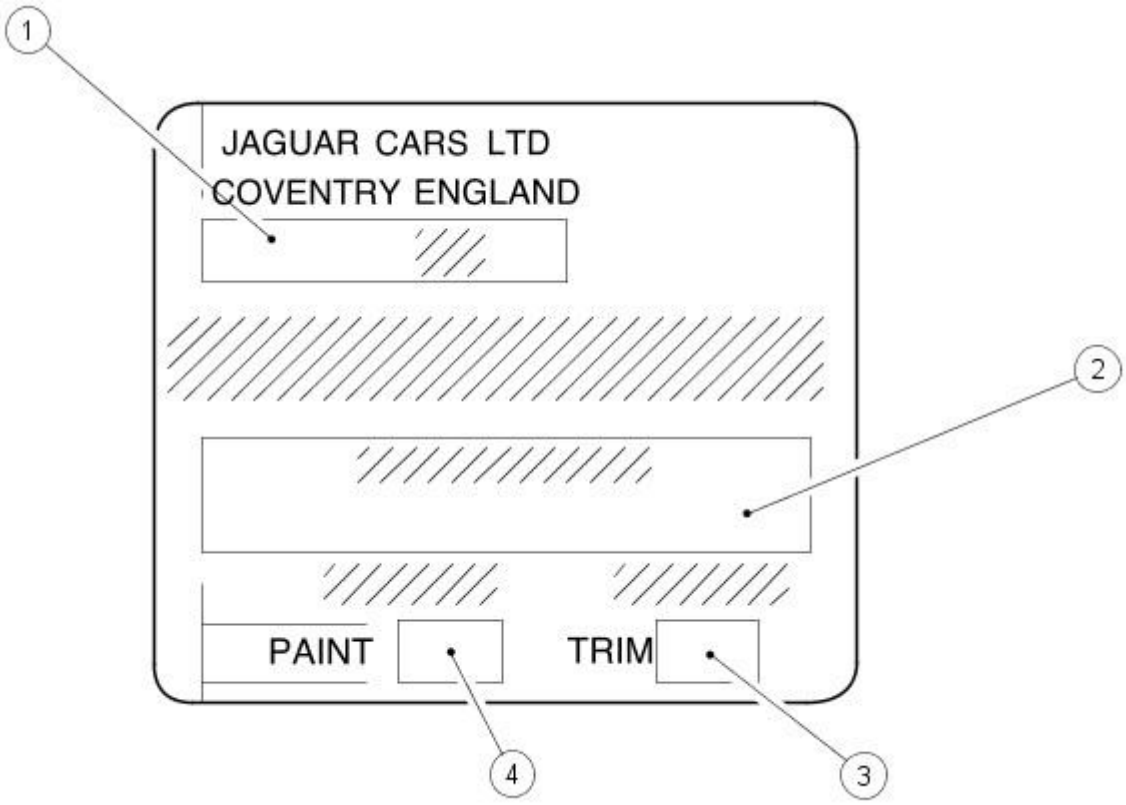

VUJ0001852

Item	Part Number	Description
1	—	Date of manufacture
2	—	Vehicle identification number
3	—	Interior trim code
4	—	Paint code

Vehicle Identification Label (Canada)

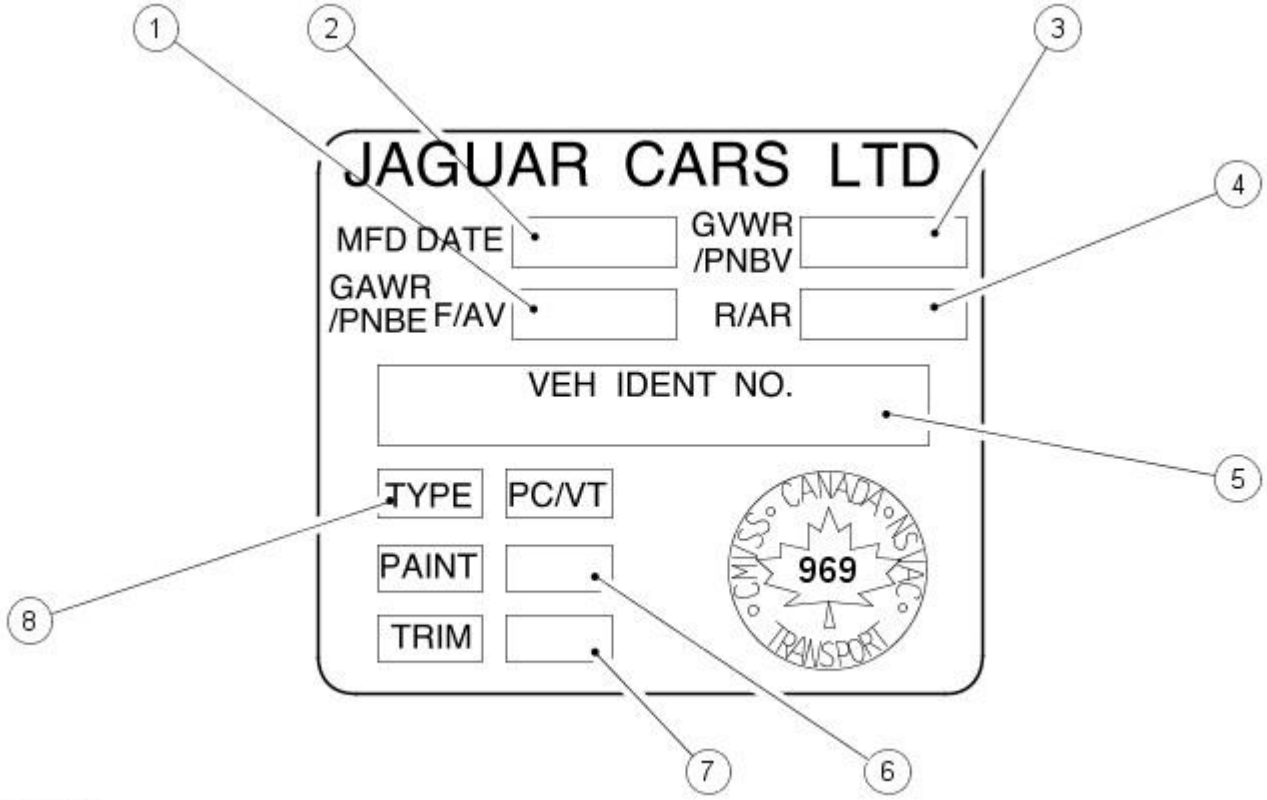

VUJ0001853

Item	Part Number	Description
1	—	Maximum permitted front axle loading
2	—	Date of manufacture
3	—	Gross vehicle weight
4	—	Maximum permitted rear axle loading
5	—	Vehicle identification number
6	—	Paint code
7	—	Interior trim code
8	—	Type

Automatic Transmission Number

The serial number of the automatic transmission unit is displayed on a metal label or bar code (where equipped) attached to the transmission casing.

Manual Transmission Number

The serial number of the manual transmission unit is displayed on a metal label or bar code (where equipped) attached to the transmission casing.

Engine Number (V6)

The engine number is stamped on an engine web on the right hand side of the cylinder block behind the engine mounting..

Engine Number (Diesel)

The engine number is contained on a bar code label on the front cover and is also stamped in the cylinder block casting.

Jacking and Lifting - Jacking

Description and Operation

Safety Precautions

CAUTION: The jack provided with the vehicle is intended to be used in an emergency for changing a deflated tire. To avoid damage to the vehicle, never use the jack to raise the vehicle for any other purpose. Refer to the Driver Handbook when using the jack supplied with the vehicle. Failure to follow these instructions can result in personal injury.

The following safety precautions must be observed when raising the vehicle to carry out service operations:

- Never rely on a jack alone to support a vehicle; use suitable vehicle stands to provide rigid support.
- When working beneath a vehicle, whenever possible, use a vehicle hoist instead of a jack and vehicle stands.
- Make sure that the vehicle is standing on firm, level ground before using a jack.
- Do not rely on the parking brake alone; chock the wheels and put the automatic transmission into PARK if possible.
- Check that any lifting equipment used has adequate capacity for the load being lifted and is in correct working order.

Jacking and Lifting - Lifting

Description and Operation

Lifting Points—Twin-Post Hoist and Floor Jack

• CAUTIONS:

Do not allow the hoist adapters to contact the steering linkage, suspension arms, stabilizer bar, rear subframe stabilizer brackets or to compress the lower suspension arm stabilizer bar insulator. Damage to the suspension, exhaust and steering linkage components may occur if care is not exercised when positioning the hoist adapters of two-post hoists prior to lifting the vehicle.

Never use the differential housing as a lift point. Damage to the differential housing and cover may occur.

When using a floor jack, a cushioned pad must be utilized to avoid body damage.

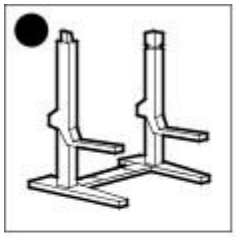

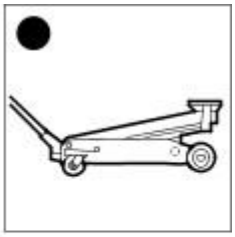

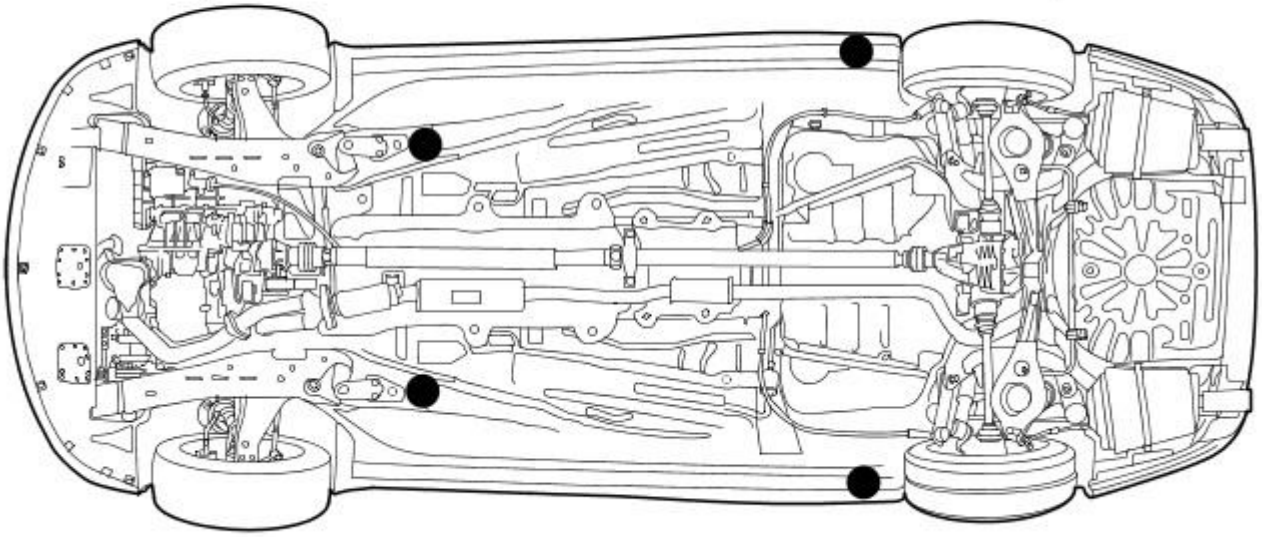

VUJ0003970

Vehicle Support Points

CAUTION: When using vehicle support stands a cushioned pad must be utilized to avoid body damage.

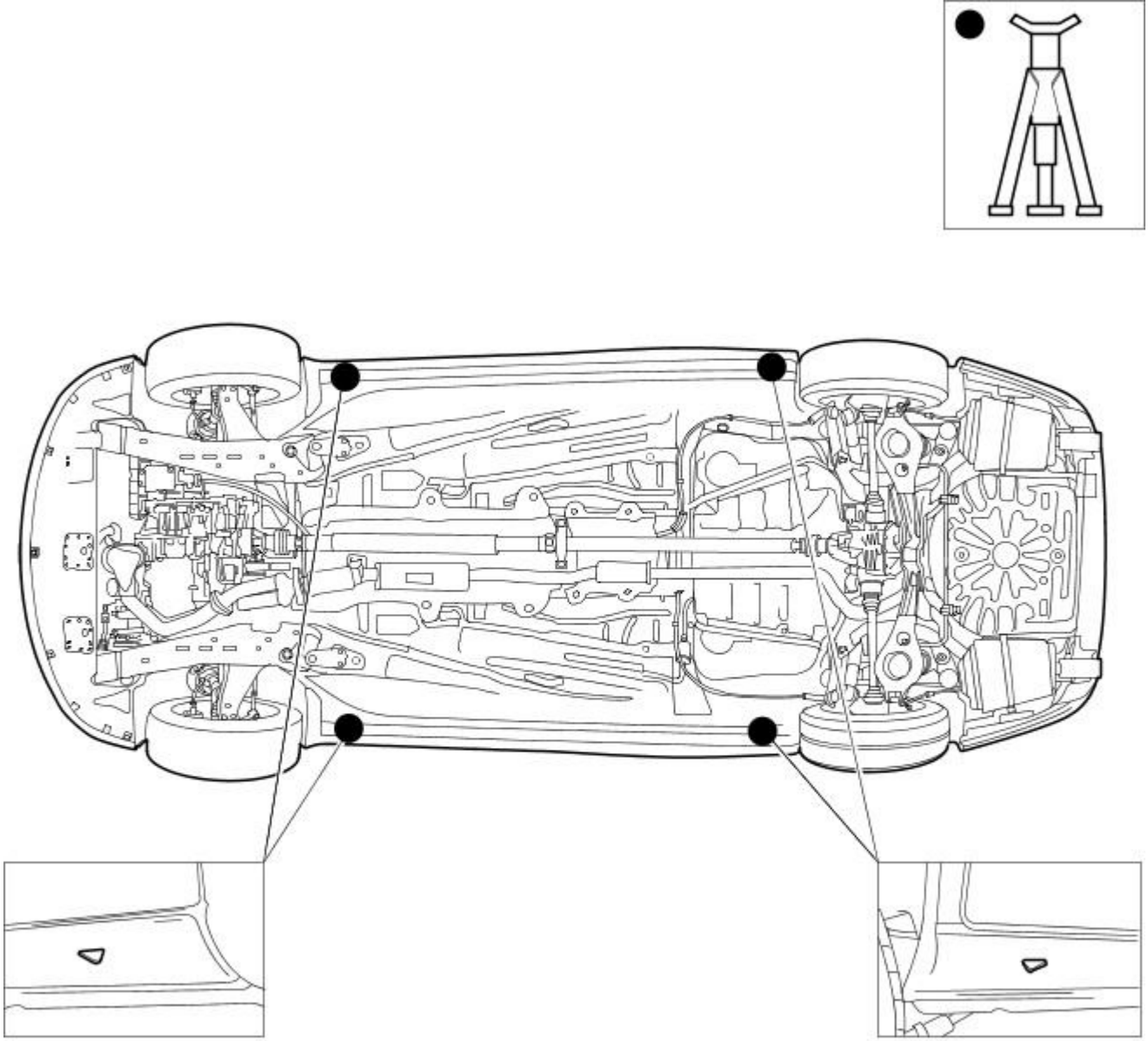

VUJ0003969

Vehicle Recovery

• NOTE: Prior to vehicle recovery, make sure that the vehicle keys are available and the security system is disarmed.

Vehicle recovery methods are:

- By flat-bed transporter.
- By front suspended tow.

Transporter or Trailer Recovery

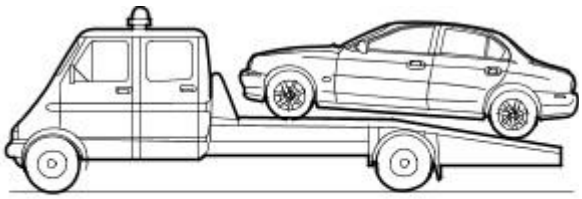

VUJ0001116

When the vehicle is being recovered by transporter or trailer:

- The parking brake must be applied and the wheels chocked.
- The gear selector lever must be in NEUTRAL. Do not select PARK on automatic transmission vehicles, as the parking lock mechanism may be damaged by the forward and backward rocking motion of the vehicle.
- The vehicle must be securely tied down to the transporter or trailer.

Front Suspended Tow

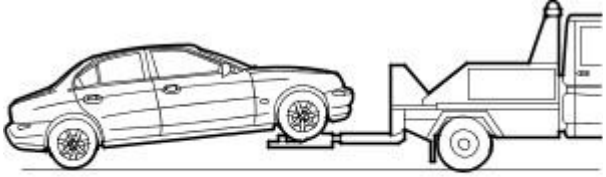

VUJ0003968

When the vehicle is being recovered by front suspended tow:

CAUTION: The driveshaft must be disconnected.

- The ignition key must be removed from the ignition switch to lock the steering.
- The front wheels must be correctly positioned in the lifting cradle and securely tied down.

Emergency Towing-Vehicles fitted with manual transmission:

WARNING: If the engine is not running, the steering will become heavy and the force necessary to effectively apply the brakes will be greatly increased.

CAUTION: A vehicle with a defective transmission must be towed by front suspended tow.

When the vehicle is being towed with all four wheels on the ground:

- Local regulations for the towing of vehicles must be followed. In some countries the registration number of the towing vehicle and an 'On Tow' sign or warning triangle must be displayed at the rear of the towed vehicle.
- The gear selector lever must be in NEUTRAL.
- The ignition switch must be in the RUN position to release the steering lock and make the direction indicators, horn and stop lamps operate.
- A distance of 48 kms (30 miles) must not be exceeded.
- A speed of 48 km/h (30 mph) must not be exceeded.
- The tow rope must be attached to the front towing eye.

Emergency Towing-Vehicles fitted with automatic transmission:

WARNING: If the engine is not running, the steering will become heavy and the force necessary to effectively apply the brakes will be greatly increased.

CAUTION: A vehicle with a defective transmission must be towed by front suspended tow.

When the vehicle is being towed with all four wheels on the ground:

- Local regulations for the towing of vehicles must be followed. In some countries the registration number of the towing vehicle and an 'On Tow' sign or warning triangle must be displayed at the rear of the towed vehicle.
- The gear selector lever must be in NEUTRAL.
- The ignition switch must be in the RUN position to release the steering lock and make the direction indicators, horn and stop lamps operate.
- A distance of 0.8 kms (0.5 miles) must not be exceeded.
- A speed of 48 km/h (30 mph) must not be exceeded.
- The tow rope must be attached to the front towing eye.

Published: 11-May-2011

Noise, Vibration and Harshness - Noise, Vibration and Harshness (NVH)

Description and Operation

Noise, vibration and harshness (NVH) is becoming more important as vehicles become more sophisticated and passenger comfort levels increase. This section is designed to aid in the diagnosis, testing and repair of NVH concerns.

- noise is defined as sounds not associated with the operation of passenger compartment equipment that interface with customer satisfaction.
- vibration is defined as impulses felt by the customer that are not caused by road surface changes.
- harshness is a ride quality issue where the customer feels that the vehicle response to the road surface is sharply transmitted to the customer.

Diagnostic Theory

Diagnosis is more than just following a series of interrelated steps in order to find the solution to the specific condition. It is a way of looking at systems that are not functioning the way they should and finding out why. Also it is knowing how the system should work and whether it is working correctly.

There are basic rules for diagnosis. If these rules are followed, the cause of the condition is usually found the first time through the system.

Know the System

- know how the parts go together.
- know how the system operates as well as its limits and what happens when the system goes wrong.
- sometimes this means checking the system against one that is known to be working correctly.

Know the History of the System

A clue in any one of these areas may save time:

- how old or new is the system?
- what kind of treatment has it had?
- has it been repaired in the past in such a manner that might relate to the present condition?
- what is the repair history?

Know the History of the Condition

- did it start suddenly or appear gradually?
- was it related to some other occurrence such as a collision or previous part renewal?
- know how the condition made itself known; it may be an important clue to the cause.

Know the Probability of Certain Conditions Developing

- Look for the simple rather than the complex.
- For example:
  - Electrical conditions usually occur at connections rather than components.
  - An engine no-start is more likely to be caused by a loose wire or small adjustment rather than a sheared-off camshaft.
- Know the difference between impossible and improbable. Certain failures in a system can be improbable but still happen.
- New parts are just that, new. It does not mean they are always good functioning parts.

Do Not Cure the Symptom and Leave the Cause

Lowering the pressure in a front tire may correct the condition of a vehicle leaning to one side, but it does not correct the original condition.

Be Positive the Cause is Found

- double check the findings.
- what caused a worn component?
- a loose transmission or engine mount could indicate that other mounts are also loose.

Diagnostic Charts

Charts are a simple way of expressing the relationship between basic logic and a physical system of components. They help discover the cause of a condition in the least time. Diagnostic charts combine many areas of diagnosis into one visual display:

- probability of certain things occurring in a system
- speed of checking certain components or functions before others
- simplicity of carrying out certain tests before others
- elimination of checking huge portions of a system by carrying out simple tests
- certainty of narrowing down the search to a small portion before carrying out in-depth testing

The fastest way to find a condition is to work with the tools that are available. This means working with proven diagnostic charts and the correct special equipment for the system.

Published: 11-May-2011

Noise, Vibration and Harshness - Noise, Vibration and Harshness (NVH)

Diagnosis and Testing

Inspection and Verification

1. **1.** Verify the customer concern.
2. **2.** Visually inspect for obvious signs of mechanical damage.
3. **3.** If an obvious cause for an observed or reported concern is found, correct the cause (if possible) before proceeding to the next step.
4. **4.** If the concern(s) remains after the inspection, determine the symptom(s) and go to the Symptom Chart.

How To Use This Diagnostic Procedure Section

- Noise, vibration and harshness (NVH) concerns have become more important as vehicles have become more sensitive to these vibrations. This section is designed as an aid to identifying these situations.
- The section provides diagnostic procedures based on symptoms. If the condition occurs at high speed, for instance, the most likely place to start is under High Speed Shake.
- The road test procedure will tell how to sort the conditions into categories and how to tell a vibration from a shake.
- A series of Road Test Quick Checks is provided to make sure that a cause is either pinpointed or eliminated.
- Name the condition, proceed to the appropriate section and locate the correct diagnosis. When the condition is identified, the job is partly done.
- Follow the diagnostic procedure as outlined.
- Quick Checks are described within the step, while more involved tests and adjustments are outlined in General Procedures.
- Always follow each step exactly and make notes to recall important findings later.

Customer Interview

The road test and customer interview (if available) provide information that will help identify the concerns and will provide direction to the correct starting point for diagnosis.

Identify the Condition

NVH usually occurs in a number of areas:

- tires
- engine accessories
- suspension
- driveline
- air leakage (wind noise)
- squeaks and rattles
- Heating ventilation and air conditioning (HVAC)
- electrical (e.g. motor noise)

It is important, therefore, that an NVH concern be isolated into its specific area(s) as soon as possible. The easiest and quickest way to do this is to carry out the Road Test as outlined.

Noise Diagnostic Procedure

Non-Axle Noise

The five most important sources of non-axle noise are exhaust, tires, roof racks, trim and mouldings, and transmission.

Therefore, make sure that none of the following conditions are the cause of the noise before proceeding with a driveline teardown and diagnosis.

- In certain conditions, the pitch of the exhaust may sound very much like gear noise. At other times, it can be mistaken for a wheel bearing rumble.
- Tires, especially snow tires, can have a high pitched tread whine or roar, similar to gear noise. Radial tires, to some degree, have this characteristic. Also, any non-standard tire with an unusual tread construction may emit a roar or whine type noise.
- Trim and mouldings can also cause whistling or a whining noise.
- Clunk may be a metallic noise heard when the automatic transmission is engaged in reverse or drive, or it may occur when the throttle is applied or released. It is caused by backlash somewhere in the driveline.
- Bearing rumble sounds like marbles being tumbled. This condition is usually caused by a damaged wheel bearing.

Noise Conditions

- Gear noise is typically a howling or whining due to gear damage or incorrect bearing preload. It can occur at various speeds and driving conditions, or it can be continuous.
- Chuckle is a particular rattling noise that sounds like a stick against the spokes of a spinning bicycle wheel. It occurs while decelerating from 64 km/h (40 mph) and can usually be heard all the way to a stop. The frequency varies with vehicle speed.
- Knock is very similar to chuckle, though it may be louder and occurs on acceleration or deceleration. The teardown will disclose what has to be corrected.

Check and rule out tires, exhaust and trim items before disassembling the transmission to diagnose and correct gear noise.

The noises described under Road Test usually have specific causes that can be diagnosed by observation as the unit is disassembled. The initial clues are the type of noise heard on the road test and the driving conditions.

Vibration Conditions

• NOTE: New constant velocity (CV) joints should not be installed unless disassembly and inspection revealed unusual wear.

Clicking, popping or grinding noises may be caused by the following:

- cut or damaged drive half shaft joint boots resulting in inadequate or contaminated lube in the outboard or inboard CV joint bearing housings

- loose drive half shaft joint boot clamps
- another component contacting the drive half shaft
- worn, damaged or incorrectly installed wheel bearing, suspension or brake component

Vibration at highway speeds may be caused by the following:

- out-of-balance front or rear wheels
- out-of-round tires
- driveline imbalance
- driveline run-out (alignment)

• NOTE: Drive half shafts are not balanced and do not contribute to rotational vibration disturbances.

Shudder or vibration during acceleration may be caused by the following:

- Excessively worn or damaged outboard or inboard CV joint shaft pilot bearing housing
- Excessively high CV joint operating angles caused by incorrect ride height. Check ride height, verify correct spring rate and check items under Inoperative Conditions

Leakage Conditions

1. **1.** Inspect the CV joint boots for evidence of cracks, tears or splits.

2. **2.** Inspect the underbody for any indication of grease splatter in the vicinity of the front or rear wheel drive half shaft joints and boots. If any grease is present this indicates damage to the half shaft joint boot or boot clamp.

3. **3.** Inspect the inboard CV joint stub shaft pilot bearing housing seal for leakage at the inboard CV joint pilot bearing housing.

Inoperative Conditions

If a CV joint or half shaft pull-out occurs, check the following:

- suspension components for correct location, damage or wear
- bushings for wear
- subframe for damage
- bent or worn components:
  - stabilizer bar link
  - left-hand rear suspension lower arm and bushing
  - right-hand rear suspension lower arm and bushing
  - rear wheel hub and half shaft
  - left-hand front suspension lower arm and bushing
  - right-hand front suspension lower arm and bushing
  - front wheel hub and half shaft

Road Test

A gear-driven unit will produce a certain amount of noise. Some noise is acceptable and may be audible at certain speeds or under various driving conditions as on a newly paved blacktop road. The slight noise is in no way detrimental and must be considered normal.

The road test and customer interview (if available) provide information needed to identify the condition and give direction to the correct starting point for diagnosis.

1. **1.** Make notes throughout the diagnosis routine. Make sure to write down even the smallest bit of information, because it may turn out to be the most important.

2. **2.** Do not touch anything until a road test and a thorough visual inspection of the vehicle have been carried out. Leave the tire pressures and vehicle load just where they were when the condition was first observed. Adjusting tire pressures, vehicle load or making other adjustments may reduce the conditions intensity to a point where it cannot be identified clearly. It may also inject something new into the system, preventing correct diagnosis.

3. **3.** Make a visual inspection as part of the preliminary diagnosis routine, writing down anything that does not look right. Note tire pressures, but do not adjust them yet. Note leaking fluids, loose nuts and bolts, or bright spots where components may be rubbing against each other. Check the luggage compartment for unusual loads.

4. **4.** Road test the vehicle and define the condition by reproducing it several times during the road test.

5. **5.** Carry out the Road Test Quick Checks as soon as the condition is reproduced. This will identify the correct diagnostic procedure. Carry out the Road Test Quick Checks more than once to verify they are providing a valid result. Remember, the Road Test Quick Checks may not tell where the concern is, but they will tell where it is not.

Road Test Quick Checks

1. **1.** 24-80 km/h (15-50 mph): With light acceleration, a moaning noise is heard and possibly a vibration is felt in the front floor pan. It is usually worse at a particular engine speed and at a particular throttle setting during acceleration at that speed. It may also produce a moaning sound, depending on what component is causing it. Refer to Tip-In Moan in the Symptom Chart.

2. **2.** Acceleration/Deceleration: With slow acceleration and deceleration, a shake is sometimes noticed in the steering wheel/column, seats, front floor pan, front door trim panel or front end sheet metal. It is a low frequency vibration (around 9-15 cycles per second). It may or may not be increased by applying brakes lightly. Refer to Idle Boom/Shake/Vibration in the Symptom Chart.

3. **3.** High Speed: A vibration is felt in the front floor pan or seats with no visible shake, but with an accompanying sound or rumble, buzz, hum, drone or booming noise. Coast with the clutch pedal depressed or shift control selector lever in neutral and engine idling. If vibration is still evident, it may be related to wheels, tires, front disc brake discs, wheel hubs or front wheel bearings. Refer to High Speed Shake in the Symptom Chart.

4. **4.** Engine rpm Sensitive: A vibration is felt whenever the engine reaches a particular rpm. It will disappear in neutral coasts. The vibration can be duplicated by operating the engine at the problem rpm while the vehicle is stationary. It can be caused by any component, from the accessory drive belt to the clutch or torque converter which turns at engine speed when the vehicle is stopped. Refer to High Speed Shake in the Symptom Chart.

5. **5.** Noise and Vibration While Turning: Clicking, popping, or grinding noises may be due to the following:

- worn, damaged, or incorrectly installed front wheel bearing
- worn, damaged or incorrectly installed half shaft.

Road Conditions

An experienced technician will always establish a route that will be used for all NVH diagnosis road tests. The road selected should be reasonably smooth, level and free of undulations (unless a particular condition needs to be identified). A smooth asphalt road that allows driving over a range of speeds is best. Gravel or bumpy roads are unsuitable because of the additional road noise produced. Once the route is established and consistently used, the road noise variable is eliminated from the test results.

• NOTE: Some concerns may be apparent only on smooth asphalt roads.

If a customer complains of a noise or vibration on a particular road and only on a particular road, the source of the concern may be the road surface. If possible, try to test the vehicle on the same type of road.

Vehicle Preparation

Carry out a thorough visual inspection of the vehicle before carrying out the road test. Note anything which is unusual. Do not repair or adjust any condition until the road test is carried out, unless the vehicle is inoperative or the condition could pose a hazard to the technician.

After verifying the condition has been corrected, make sure all components removed have been installed.

Lift Test

After a road test, it is sometimes useful to do a similar test on a lift.

When carrying out the high-speed shake diagnosis or engine accessory vibration diagnosis on a lift, observe the following precautions:

WARNING: If only one drive wheel is allowed to rotate, speed must be limited to 55 km/h (35 mph) indicated on the speedometer since actual wheel speed will be twice that indicated on the speedometer. Speed exceeding 55 km/h (35 mph) or allowing the drive wheel to hang unsupported could result in tire disintegration, differential failure, constant velocity joint and driveshaft failure, which could cause serious personal injury and extensive vehicle damage. Failure to follow these instructions may result in personal injury.

CAUTION: The suspension should not be allowed to hang free. When the CV joint is run at a very high angle, extra vibration as well as damage to the seals and joints can occur.

The suspension lower arms should be supported as far outboard as possible. To bring the vehicle to its correct ride height, the full weight of the vehicle should be supported in the rear by floor jacks. For additional information, refer to
REFER to: Jacking (100-02 Jacking and Lifting, Description and Operation).

1. **1.** Raise and support the vehicle. For additional information, refer to
   REFER to: Lifting (100-02 Jacking and Lifting, Description and Operation).
2. **2.** Explore the speed range of interest using the Road Test Quick Checks as previously described.
3. **3.** Carry out a coast down in neutral. If the vehicle is free of vibration when operating at a steady indicated speed and behaves very differently in drive and coast, a transmission concern is likely.

Note, however, that a test on the lift may produce different vibrations and noises than a road test because of the effect of the lift. It is not unusual to find vibrations on the lift that were not found in the road test. If the condition found on the road can be duplicated on the lift, carrying out experiments on the lift may save a great deal of time.

Symptom Chart

Symptom	Possible Sources	Action
High-speed shake	* Wheel end vibration * Engine/gearbox/transfer box * Driveline	* GO to Pinpoint Test A.
Tip-in moan	* Air cleaner * Power steering (PS) * Powertrain * Engine mounts * Exhaust system	* GO to Pointpoint Test B.
Idle boom/shake/vibration, or shudder	* Cable(s)/hoses(s) * Engine mounts * Exhaust system * Belt/pulleys	* GO to Pinpoint Test C.
Wheel end vibration analysis	* Suspension/front or rear wheel drive half shaft and joints * Tires/wheels * Wheel bearings * Front or rear wheel drive half shaft joint boots	* GO to Pinpoint Test D.
Non-axle noise	* Trim/mouldings * A/C system * Accessories	* GO to Pinpoint Test E.

Pinpoint Tests

• NOTE: These Pinpoint Tests are designed to take the technician through a step-by-step diagnosis procedure to determine the cause of a condition. It may not always be necessary to follow the chart to its conclusion. Carry out only the Pinpoint Test steps necessary to correct the condition. Then check operation of the system to make sure the condition is corrected.

After verifying that the condition has been corrected, make sure all components removed have been installed.

PINPOINT TEST A : HIGH-SPEED SHAKE	
TEST CONDITIONS	**DETAILS/RESULTS/ACTIONS**
A1: NEUTRAL COAST	
	1 Carry out the neutral coast test.

	Does the vibration disappear during the neutral coast test? **Yes** CHECK and INSTALL new engine/gearbox/transfer box mounts as necessary. REPEAT Road Test as outlined. **No** GO to D1.

PINPOINT TEST B : TIP-IN MOAN	
TEST CONDITIONS	**DETAILS/RESULTS/ACTIONS**
B1: CHECK THE AIR CLEANER	
	1 Check the air cleaner. ● Check the air cleaner, inlet tube, outlet tube, resonators and all other components associated with the air induction system for correct installation and tightness of all connections.
	Are the components OK? **Yes** GO to B2. **No** CORRECT the condition. REPEAT the Road Test as outlined.
B2: CHECK THE EXHAUST SYSTEM	
	1 Carry out the exhaust system neutralizing procedure in this section.
	Is the exhaust system OK? **Yes** GO to B3. **No** REPAIR as necessary. RESTORE vehicle. REPEAT the Road Test as outlined.
B3: CHECK THE POWER STEERING	
	1 Remove the auxiliary drive belt and test for tip-in moan.
	Is the tip-in moan OK? **Yes** REPAIR the power steering as necessary. For additional information, refer to REFER to: Power Steering Pump - 2.0L NA V6 - AJV6/2.5L NA V6 - AJV6/3.0L NA V6 - AJ27 (211-02 Power Steering, Removal and Installation). **No** CHECK and INSTALL new engine/gearbox/transfer box mounts as necessary. REPEAT Road Test as outlined.

PINPOINT TEST C : IDLE BOOM/SHAKE/VIBRATION/SHUDDER	
TEST CONDITIONS	**DETAILS/RESULTS/ACTIONS**
C1: CHECK CABLE/HOSES	
	1 Check the engine compartment for any component that may be grounding between the engine and body or chassis. Example: air conditioning (A/C) hoses.
	Are the components OK? **Yes** GO to C2. **No** CORRECT the condition. REPEAT the Road Test as outlined.
C2: CHECK THE DRIVER AIR BAG MODULE.	
	1 Remove the driver air bag module and visually inspect the for correct installation or any touch condition.
	Is the driver air bag module OK? **Yes** GO to C3. **No** CORRECT the condition. REPEAT the Road Test as outlined.
C3: CHECK THE COOLING RADIATOR	
	1 Check the engine cooling radiator mountings and bushings for security and condition. Check the radiator installation for any component that may have a touch condition.
	Are the installation and bushings OK? **Yes** GO to C4. **No** CORRECT the condition. REPEAT the Road Test as outlined.
C4: CHECK THE EXHAUST SYSTEM	
	1 Carry out the exhaust system neutralizing procedure in this section.
	Is the exhaust system OK? **Yes** CHECK and INSTALL new engine/gearbox/transfer box mounts as necessary. REPEAT Road Test as outlined. **No** REPAIR as necessary. REPEAT Road Test.

PINPOINT TEST D : WHEEL END VIBRATION ANALYSIS	
TEST CONDITIONS	**DETAILS/RESULTS/ACTIONS**
D1: INSPECT THE TIRES	
	1 Inspect the tires. ● Raise and support the vehicle. For additional information, refer to REFER to: Lifting (100-02 Jacking and Lifting, Description and Operation). ● inspect the tires for: ● correct tire size ● tire/wheel compatibility ● wear or damage ● tire beads correctly seated

	Are the tires OK? **Yes** GO to D2. **No** INSPECT the wheels. For additional information, refer to REFER to: Wheels and Tires (204-04 Wheels and Tires, Diagnosis and Testing).
D2: INSPECT WHEEL BEARINGS	
	1 Inspect the wheel bearings. For additional information, refer to REFER to: Wheel Bearing Inspection (204-00 Suspension System - General Information, General Procedures).
	Are the wheel bearings OK? **Yes** GO to D3. **No** REPAIR as necessary. REPEAT the Road Test as outlined.
D3: INSPECT THE REAR WHEEL DRIVE HALF SHAFT JOINT BOOTS	
	1 Inspect the rear wheel drive half shaft joint boots. ● spin the rear tire by hand ● inspect for evidence of cracks, tears, splits or splattered grease
	Are the rear wheel drive half shaft joint boots OK? **Yes** GO to D4. **No** REPAIR as necessary. REPEAT the Road Test as outlined.
D4: INSPECT THE FRONT WHEEL DRIVE HALF SHAFT JOINT BOOTS	
	1 Inspect the front wheel drive half shaft joint boots ● spin the front tire by hand ● inspect for evidence of cracks, tears, splits or splattered grease
	Are the front wheel drive half shaft joint boots OK? **Yes** GO to D5. **No** REPAIR as necessary. REPEAT the Road Test as outllined.
D5: INSPECT WHEEL AND TIRE RUNOUT	
	1 Inspect the wheel and tire runout. ● Carry out the Wheel and Tire Check procedure. For additional information, refer to REFER to: Wheels and Tires (204-04 Wheels and Tires, Diagnosis and Testing).
	Is the wheel and tire runout OK? **Yes** Balance the wheels and tires. Refer to the wheel balance equipment manufacturers instructions. **No** REPAIR as necessary. REPEAT the Road Test as outlined.

PINPOINT TEST E : NON-AXLE NOISE	
TEST CONDITIONS	**DETAILS/RESULTS/ACTIONS**
E1: INSPECT VEHICLE TRIM	
	1 Check the grille and trim mouldings to see if they are the source of the noise.
	Are the vehicle trim components causing the noise? **Yes** INSTALL new trim or REPAIR as necessary. For additional information, refer to REFER to: Exterior Trim (501-08 Exterior Trim and Ornamentation, Description and Operation). **No** GO to E2.
E2: CHECK THE A/C SYSTEM FOR NOISE	
	1 Check the A/C system components for noise by turning the A/C system on and off.
	Is the A/C system causing the noise? **Yes** Diagnose the A/C system. For additional information, refer to REFER to: Climate Control System (412-00 Climate Control System - General Information, Diagnosis and Testing). **No** GO to E3.
E3: CHECK NON-FACTORY ACCESSORIES	
	1 Inspect any accessories for being the source of the noise. Example: grounding body-to-frame, antennas, visors, bug deflectors and fog lights?
	Are the accessories the cause of the noise? **Yes** ADJUST, REPAIR or INSTALL new accessories or fasteners as required. **No** Verify the customer concern

Noise, Vibration and Harshness - Exhaust System Neutralizing

General Procedures

1. Loosen the muffler inlet pipe and resonator pipe to exhaust manifold fasteners at the flanges and the muffler inlet connection.
2. Place a stand to support the muffler parallel to the vehicle frame with the muffler pipe bracket free of stress.
3. Tighten the muffler connection.
4. Position the exhaust pipes to the manifolds and tighten. Make sure that the catalytic converters and heat shields do not contact the frame rails.
5. With the complete exhaust system tight (and cooled) the rear hanger insulator should be angled forward, to allow the system to expand rearward when heated during normal running.

Suspension System - General Information -

General Specifications

Item	Specification
Clear Vision	
Clear vision (negative value is counterclockwise)	0° ± 3°
Ride Height	
Front	371 mm ± 15 mm
Rear	370 mm ± 15 mm
Ball Joint Radial Play	
Lower ball joint — maximum	0.8 mm

Wheel Alignment - Front

2001.50 MY onwards VIN - C00344 to Current				
Item		**LH**	**RH**	**Split LH-RH**
Castor	Decimal degrees	2.25° ± 0.75°	2.25° ± 0.75°	0° ± 0.75°
	Degrees/minutes	2° 15' ± 45'	2° 15' ± 45'	0° ± 45'
Camber	Decimal degrees	-0.54° ± 0.75°	-0.54° ± 0.75°	0° ± 0.75°
	Degrees/minutes	-0° 32' ± 45'	-0° 32' ± 45'	0° ± 45'
Total toe	Decimal degrees	-0.1° ± 0.20°		
	Degrees/minutes	-0° 6' ± 12'		

Wheel Alignment - Rear

2001.50 MY onwards VIN - C00344 to Current			
Item		**LH**	**RH**
Camber	Decimal degrees	-0.70° ± 0.75°	-0.70° ± 0.75°
	Degrees/minutes	-0° 42' ± 45'	-0° 42' ± 45'
Toe	Decimal degrees	0.125° ± 0.14°	0.125° ± 0.14°
	Degrees/minutes	0° 8' ± 8'	0° 8' ± 8'
Total toe	Decimal degrees	0.25° ± 0.20°	
	Degrees/minutes	0° 15' ± 12'	
Rear thrust angle	Decimal degrees	0° ± 0.14°	
	Degrees/minutes	0° ± 8'	

- All the above figures are measured at "kerb" height -all fluids at full and a full fuel tank.
- Tires must be inflated to normal pressure
  For additional information, refer to: Specifications (204-04 Wheels and Tires, Specifications).
- Rear thrust angle = (LH toe - RH toe) ÷ 2
- Ride height is measured from the centre of the wheel to the apex of the wheel arch, through the wheel centre line.

Suspension System - General Information - Wheel Alignment Angles

Description and Operation

Toe is adjustable on the front and rear suspension system. The front toe is adjusted by use of the front tie-rod. The rear toe is adjusted by the use of cam bolts in the lower control arm to the rear crossmember.

Toe

Positive Toe (Toe-In)

VUJ0002674

Negative Toe (Toe-Out)

VUJ0002673

The vehicle toe setting:

- Affects tire wear and directional stability.

Ride Height

• NOTE: All ride height measurements are carried out with vehicle empty and 9 litres of fuel in the tank (showroom condition).

Front Ride Height Measurement

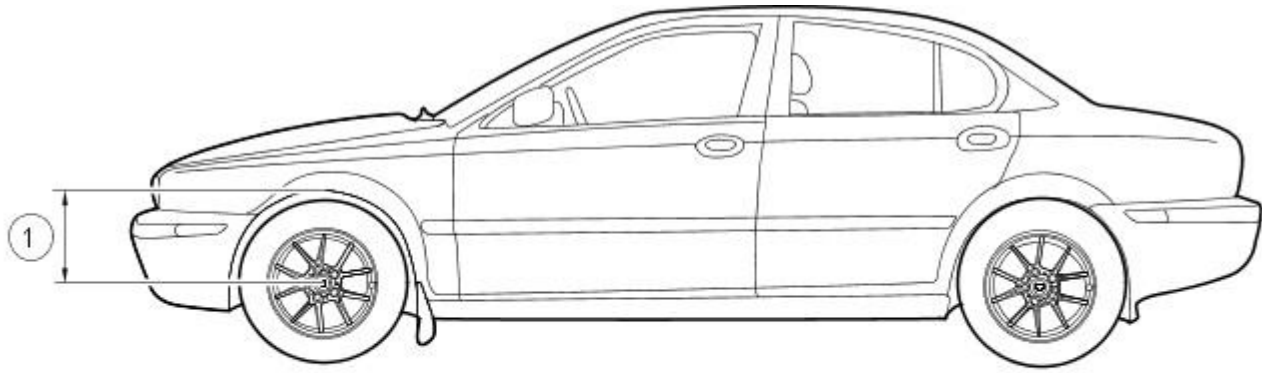

VUJ0002675

Item	Description
1	Front ride height measurement

Rear Ride Height Measurement

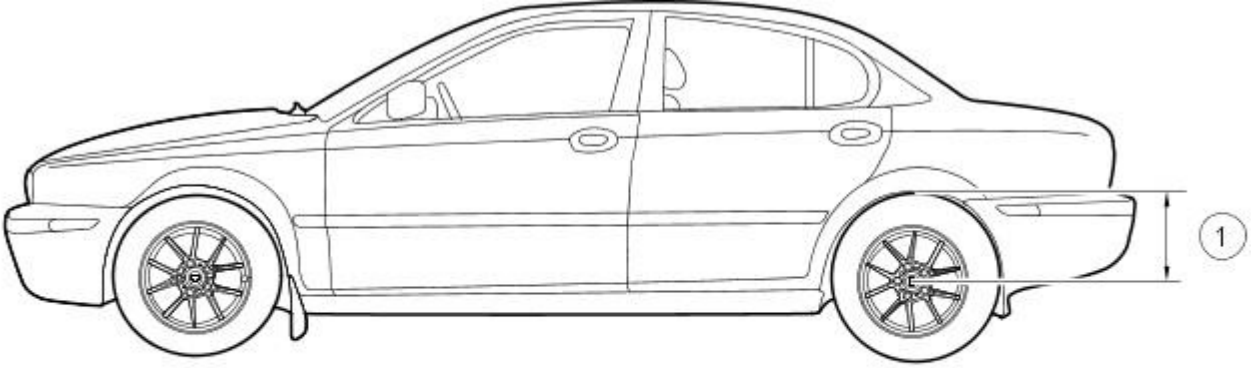

VUJ0002676

Item	Description
1	Rear ride height measurement

Wheel Track

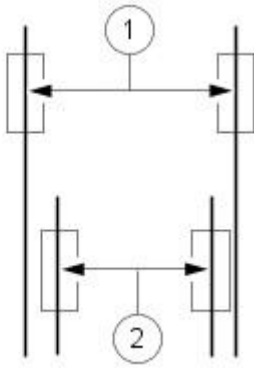

A0001102

Item	Description
1	Front track
2	Rear track

Crabbing

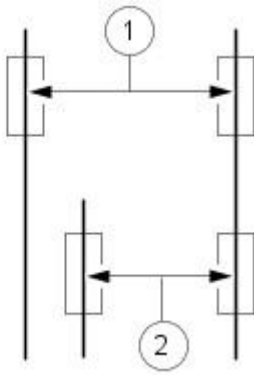

A0001103

Item	Description
1	Front track
2	Rear track crabbing

Crabbing is the condition in which the independent rear suspension (IRS) system is not square to the chassis. Heavily crowned roads can give the illusion of crabbing.

Wander

Wander is the tendency of the vehicle to require frequent, random left and right steering wheel corrections to maintain a straight path down a level road.

Shimmy

Shimmy, as observed by the driver, is large, consistent, rotational oscillations of the steering wheel resulting from large, side-to-side (lateral) tire/wheel movements.

Shimmy is usually experienced near 40 miles/hour (64 km/h), and can start or be amplified when the tire contacts pot holes or irregularities in the road surface.

Nibble

Sometimes confused with shimmy, nibble is a condition resulting from tire interaction with various road surfaces and observed by the driver

as small rotational oscillations of the steering wheel.

Poor Returnability of the Steering

Poor returnability of the steering is used to describe the poor return of the steering wheel to center after a turn or the steering correction is completed.

Drift/Pull

Pull is a tugging sensation, felt by the hands on the steering wheel, that must be overcome to keep the vehicle going straight.

Drift describes what a vehicle with this condition does with hands off the steering wheel.

- A vehicle-related drift/pull, on a flat road, will cause a consistent deviation from the straight-ahead path and require constant steering input in the opposite direction to counteract the effect.
- Drift/pull may be induced by conditions external to the vehicle (i.e., wind, road crown).

Vague On-Center Feel

Vague on-center feel is characterized by little or no build up of turning effort felt in the steering wheel as the wheel is rocked slowly left and right within very small turns around center or straight-ahead (under 20 degrees of steering wheel turn). Efforts may be said to be "flat on center."

- In the diagnosis of a road ability problem, it is important to understand the difference between wander and vague on-center feel.

www.JagDocs.com

Suspension System - General Information - Suspension System

Diagnosis and Testing

Inspection and Verification

1. **1.** Verify the customer's concern by carrying out a road test on a smooth road. If any vibrations are apparent, refer to Section 100-04 Noise, Vibration and Harshness.
2. **2.** Visually inspect for obvious signs of mechanical damage.

Visual Inspection Chart

Mechanical
• Damaged tires • Wheel bearing(s) • Loose or damaged front or rear suspension components • Loose, damaged or missing suspension retainer(s) • Incorrect spring usage • Damaged or sagging spring(s) • Damaged or leaking shock absorber(s) • Damaged or leaking strut(s) • Worn or damaged suspension bushing(s) • Loose, worn or damaged steering system components • Damaged axle components

3. **3.** If an obvious cause for an observed or reported condition is found, correct the cause (if possible) before proceeding to the next step.
4. **4.** If the fault is not visually evident, verify the symptom and refer to the following Symptom Chart.

Symptom Chart

Symptom	Possible Sources	Action
Crabbing	* Incorrect rear thrust angle.	* CHECK the rear subframe alignment. For additional information, refer toSection 502-00 Uni-Body, Subframe and Mounting System.
	* Front or rear suspension components.	* INSPECT the front and rear suspension systems. REPAIR or INSTALL new suspension components as necessary. For additional information, refer toSection 204-01 Front Suspension orSection 204-02 Rear Suspension.
	* Drive axle damaged.	* INSTALL a new drive axle. For additional information, refer toSection 205-02 Rear Drive Axle/Differential.
Drift/Pull	* Unequal tire pressure.	* CHECK and ADJUST the tire pressures. INSPECT the tire for excessive wear. For additional information, refer to Section 204-04 Wheels and Tires.
	* Incorrect wheel alignment.	* CHECK and ADJUST the wheel alignment. For additional information, refer to Toe Adjustment—Front in this section.
	* Tires.	* CHECK and ADJUST the tire pressures. INSPECT the tire for excessive wear. For additional information, refer to Section 204-04 Wheels and Tires.
	* Unevenly loaded or overloaded vehicle.	* NOTIFY the customer of incorrect vehicle loading.
	* Damaged steering components.	* CHECK the steering system. For additional information, refer to Section 211-00 Steering System - General Information.
	* Brake drag.	* CHECK the brakes. For additional information, refer toSection 206-00 Brake System - General Information.
Front Bottoming or Riding Low	* Spring(s).	* CHECK the ride height. INSTALL new springs as necessary. For additional information, refer to Section 204-01 Front Suspension.
Incorrect Tire Wear	* Incorrect tire pressure (rapid center rib or inner and outer edge wear).	* CHECK and ADJUST the tire pressure. INSPECT the tire for excessive wear. For additional information, refer to Section 204-04 Wheels and Tires.
	* Excessive front or rear toe (rapid inner or outer edge wear).	* CHECK and ADJUST the wheel alignment. For additional information, refer toToe Adjustment—Front or Toe Adjustment—Rear in this section.
	* Tires out of balance (tires cupped or dished).	* BALANCE the tires.
Rough Ride	* Spring(s).	* CHECK and INSTALL new springs as necessary. For additional information, refer to Section 204-01 Front Suspension orSection 204-02 Rear Suspension.
	* Shock absorber(s).	* CHECK and INSTALL new shock absorbers as necessary. For additional information, refer to Section 204-01 Front Suspension orSection 204-02 Rear Suspension.
Shimmy or Wheel Tramp	* Loose wheel nut(s).	* CHECK and TIGHTEN the wheel nuts to specification. For additional information, refer to Section 204-04 Wheels and Tires.
	* Loose front suspension retainers.	* CHECK and TIGHTEN the suspension retainers to specification. For additional information, refer to Section 204-01 Front Suspension.
	* Front wheel bearing(s).	* CHECK the wheel bearings. For additional information, refer to Wheel Bearing Inspection—Front and Rear in this section.
	* Wheels/tires.	* CHECK the wheels/tires. BALANCE or INSTALL new wheels/tires as necessary. For additional information, refer to Section 204-04 Wheels and Tires.
	* Shock absorber(s).	* CHECK and INSTALL new shock absorbers as necessary. For additional information, refer to Section 204-01 Front Suspension orSection 204-02 Rear Suspension.
	* Spring(s).	* CHECK and INSTALL new springs as necessary. For additional information, refer to Section 204-01 Front Suspension orSection 204-02 Rear Suspension.
	* Loose, worn or damaged ball joint(s).	* CHECK the Ball Joint(s). For additional information, refer to Ball Joint inspection in this section.
	* Loose, worn or damaged steering components.	* CHECK and INSTALL new components as necessary. For additional information, refer to Section 211-00 Steering System - General Information.
	* Front wheel alignment.	* CHECK and ADJUST the front wheel alignment. For additional information, refer to Toe Adjustment—Front in this section.

Poor Returnability of the steering.	* Ball joints.	* CHECK the Ball Joint(s). For additional information, refer to Ball Joint inspection in this section.
	* Steering components.	* CHECK and INSTALL new components as necessary. For additional information, refer to Section 211-00 Steering System - General Information.
Steering wheel off-center	* Unequal front or rear toe settings.	* CHECK and ADJUST the wheel alignment. For additional information, refer toToe Adjustment—Front or Toe Adjustment—Rear in this section.
	* Steering components.	* CHECK and INSTALL new components as necessary. For additional information, refer to Section 211-00 Steering System - General Information.
Sway or roll	* Overloaded, unevenly or incorrectly loaded vehicle.	* NOTIFY the customer of incorrect vehicle loading.
	* Loose wheel nut(s).	* CHECK and TIGHTEN the wheel nut(s) to specification. For additional information, refer to Section 204-04 Wheels and Tires.
	* Spring(s).	* CHECK and INSTALL new springs as necessary. For additional information, refer to Section 204-01 Front Suspension orSection 204-02 Rear Suspension.
	* Shock absorber(s).	* CHECK and INSTALL new shock absorbers as necessary. For additional information, refer to Section 204-01 Front Suspension orSection 204-02 Rear Suspension.
	* Loose front stabilizer bar or rear stabilizer bar.	* CHECK and TIGHTEN the stabilizer bar to specification. For additional information, refer to Section 204-01 Front Suspension orSection 204-02 Rear Suspension.
	* Worn lower suspension arm stabilizer bar bushing.	* INSTALL new lower suspension arm stabilizer bar bushing as necessary. For additional information, refer to Section 204-01 Front Suspension orSection 204-02 Rear Suspension.
Vehicle Leans to One Side	* Unevenly loaded or overloaded vehicle.	* NOTIFY the customer of incorrect vehicle loading.
	* Front or rear suspension components.	* INSPECT the front and rear suspension systems. REPAIR or INSTALL new suspension components as necessary. For additional information, refer toSection 204-01 Front Suspension orSection 204-02 Rear Suspension.
	* Shock absorber(s).	* CHECK and INSTALL new shock absorbers as necessary. For additional information, refer to Section 204-01 Front Suspension orSection 204-02 Rear Suspension.
	* Spring(s).	* CHECK and INSTALL new springs as necessary. For additional information, refer to Section 204-01 Front Suspension orSection 204-02 Rear Suspension.
	* Incorrect ride height. Lateral tilt out of specification.	* CHECK the ride height. INSTALL new springs as necessary. For additional information, refer to Section 204-01 Front Suspension orSection 204-02 Rear Suspension.
Vibration/Noise	* Tires/wheels. * Wheel bearings. * Wheel hubs. * Brake components. * Suspension components. * Steering components.	* CHECK and INSTALL new components as necessary. For additional information, refer to Section 100-04 Noise, Vibration and Harshness.
Wander	* Unevenly loaded or overloaded vehicle.	* NOTIFY the customer of incorrect vehicle loading.
	* Ball joint(s).	* CHECK the Ball Joint(s). For additional information, refer to Ball Joint inspection in this section.
	* Front wheel bearing(s).	* CHECK the wheel bearings. For additional information, refer to Wheel Bearing Inspection—Front and Rear in this section.
	* Loose, worn or damaged suspension components.	* CHECK and INSTALL new suspension components as necessary. For additional information, refer to Section 204-01 Front Suspension orSection 204-02 Rear Suspension.
	* Loose suspension retainers.	* CHECK and TIGHTEN the suspension retainers to specification. For additional information, refer to Section 204-01 Front Suspension orSection 204-02 Rear Suspension.
	* Steering components.	* CHECK and INSTALL new steering components. For additional information, refer toSection 211-00 Steering System - General Information.
	* Wheel alignment (excessive total front toe-out).	* CHECK and ADJUST the front wheel alignment. For additional information, refer to Toe Adjustment—Front in this section.

Component Tests

Ball Joint Inspection

1. **1.** Raise and support the vehicle. For additional information, refer toSection 100-02 Jacking and Lifting.
2. **2.** Prior to carrying out any inspection of the ball joints, inspect the wheel bearings. For additional information, refer to Wheel Bearing Inspection—Front and Rear.
3. **3.** Position a safety stand beneath the jacking point to test the lower arm.
4. **4.** While an assistant pulls and pushes the top and bottom of the tire, observe the relative movement between the ball joint and the suspension lower arm. Any movement at or exceeding the specification indicates a worn or damaged ball joint.Install a new lower arm as necessary. For additional information, refer toSection 204-01 Front Suspension orSection 204-02 Rear Suspension.
5. **5.** Remove the safety stand.
6. **6.** Lower the vehicle.

Suspension System - General Information - Front Toe Adjustment

General Procedures

• NOTE: The checking and subsequent adjustment of the front toe setting should be carried out on a flat surface and in accordance with the manufactures instructions for the wheel alignment equipment used.

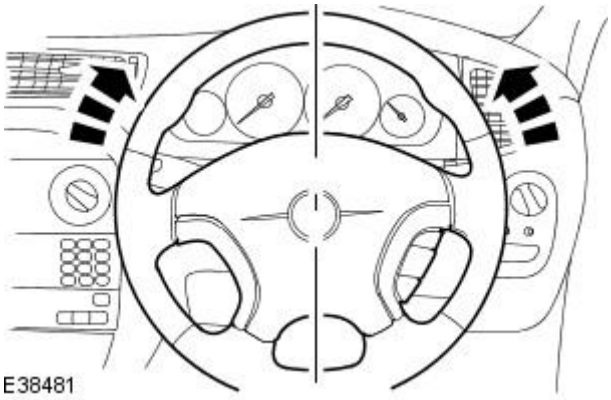

1. Start the engine and centralize the steering wheel.

2. Turn the engine off, and hold the steering wheel in the 'straight ahead' position by attaching a rigid link from the steering wheel to the brake pedal.

3. Using suitable four wheel alignment equipment, check the toe setting.

4. NOTE: Right-hand shown, left-hand similar.

Loosen the tie rod end locknuts.

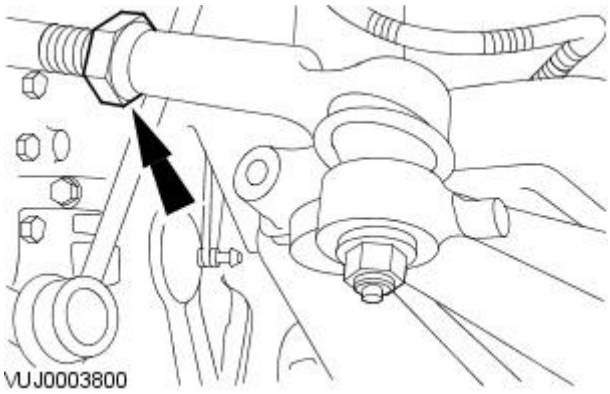

5. NOTE: Right-hand shown, left-hand similar.

Reposition the steering gear boot outer clamps.

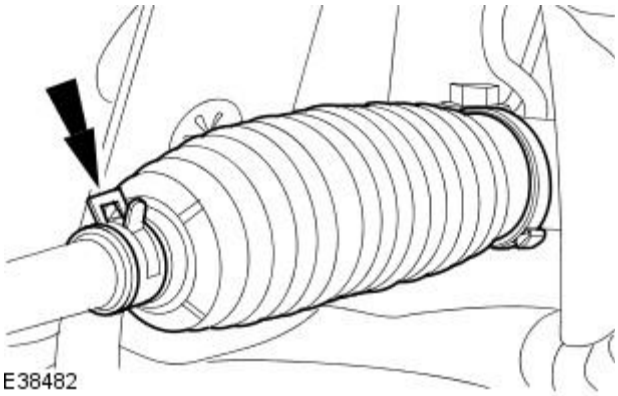

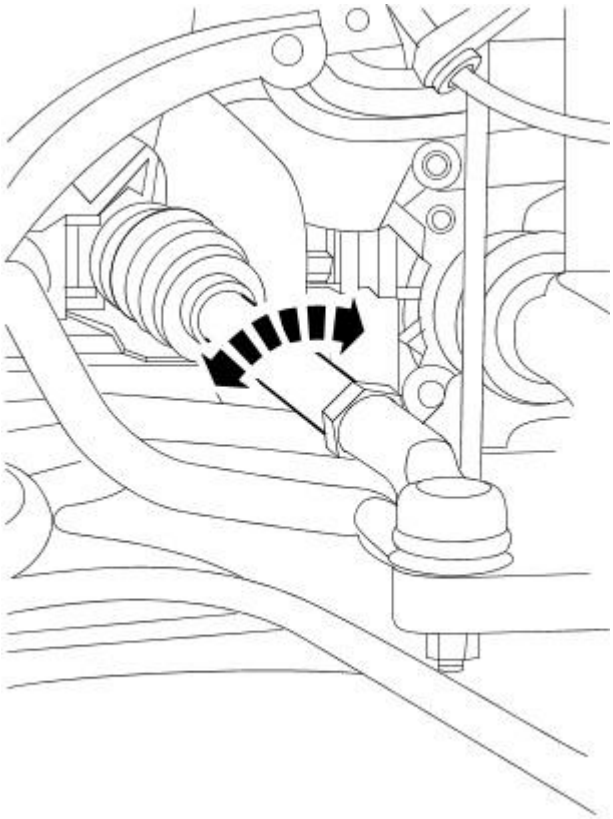

6. NOTE: Right-hand shown, left-hand similar.

Rotate the tie-rods an equal amount in either a clockwise or a counterclockwise direction to adjust the toe setting.

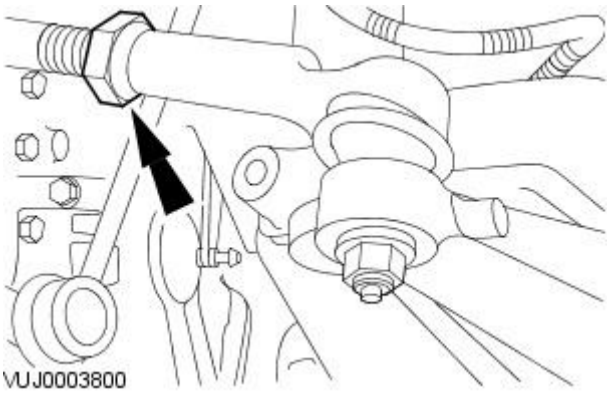

7. NOTE: Right-hand shown, left-hand similar.

Tighten the tie-rod end locknuts.

- Tighten to 40 Nm.

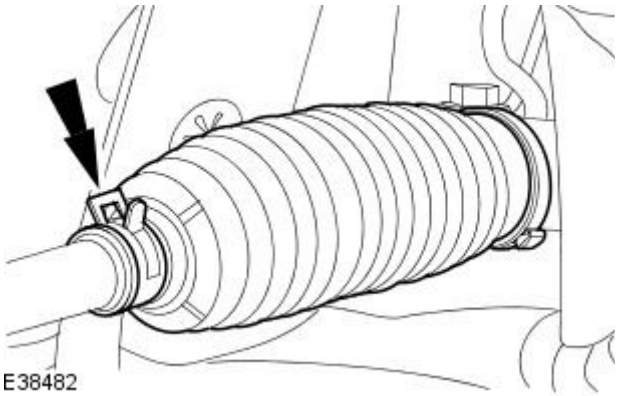

8. NOTE: Right-hand shown, left-hand similar.

Reposition the steering gear boot outer clamps.

9. Check the toe setting.

Suspension System - General Information - Rear Toe Adjustment

General Procedures

• NOTE: The checking and subsequent adjustment of the rear toe setting should be carried out on a flat surface and in accordance with the manufactures instructions for the wheel alignment equipment used.

1. NOTE: Final tightening of the rear suspension components should be carried out when the vehicle weight is on the road wheels.

Using suitable four wheel alignment equipment, check the toe setting.

2. Raise and support the vehicle.
For additional information, refer to Section 100-02 Jacking and Lifting.

3. NOTE: Left-hand shown, right-hand similar.

Loosen the rear lower arm cam bolt nuts.

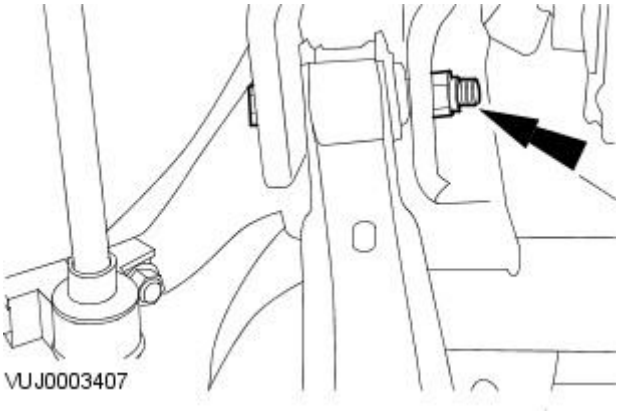

4. Rotate the the cam bolts equal amounts, in either a clockwise or a counterclockwise direction, to adjust the toe setting.

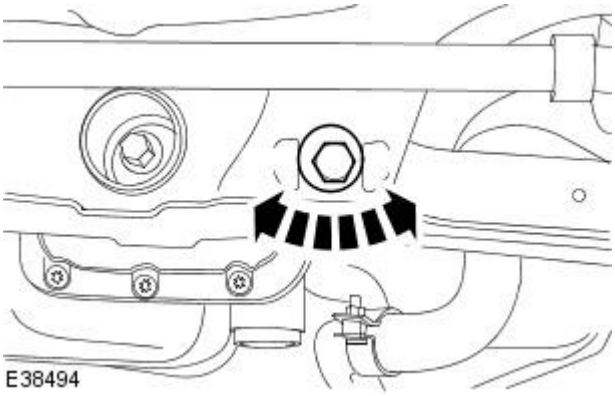

5. CAUTION: The final tightening of the suspension components should be carried out with the vehicle on its wheels. Failure to follow this instruction may result in damage to the vehicle.

• NOTE: Left-hand shown, right-hand similar.

Tighten the rear lower arm cam bolt nuts.

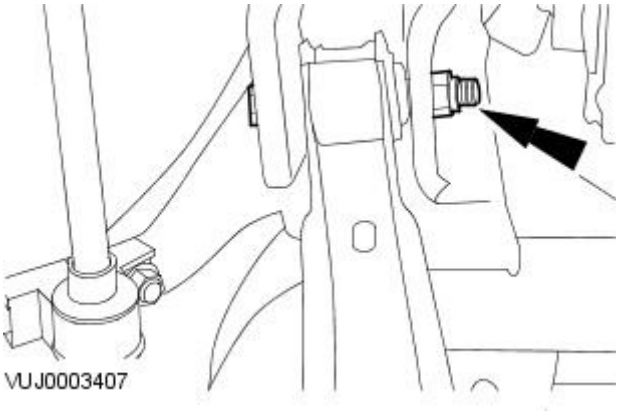

6. Lower the vehicle.

- Bounce the vehicle to make sure that the suspension is in its normal resting position.

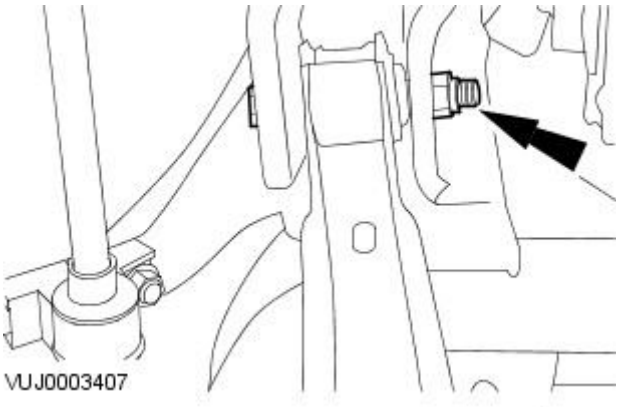

7. NOTE: Left-hand shown, right-hand similar.

Tighten the rear lower arm cam bolt nuts.

- Tighten to 115 Nm.

Suspension System - General Information - Wheel Bearing Inspection

General Procedures

1. Raise and support the vehicle. For additional information, refer to Section 100-02 Jacking and Lifting .
2. NOTE: Make sure the wheel rotates freely and the brake pads are retracted sufficiently to allow movement of the wheel and tire.

   Firmly hold the tire at the top and bottom and move the wheel inward and outward while lifting the weight of the wheel and tire off the wheel bearing.
3. If the wheel and tire is loose on the wheel hub assembly or does not rotate freely, install a new front or rear wheel bearing as necessary. For additional information, refer to Section 204-01 Front Suspension or Section 204-02 Rear Suspension .

Front Suspension -

Torque Specifications

Description	Nm	lb-ft	lb-in
Lower arm front retaining bolt	A	A	A
Lower arm rear retaining nut and bolt	A	A	A
Lower arm ball joint retaining nut and bolt	83	61	-
Stabilizer bar to link bar retaining nuts	48	35	-
Stabilizer bar to subframe retaining bolts	48	35	-
Strut top mount retaining nuts	25	18	-
Subframe front mount retaining bolts	142	105	-
Subframe rear mount retaining bolts	142	105	-
Subframe reinforcement plate retaining bolts (M8)	35	26	-
Subframe reinforcement plate retaining bolts (M10)	70	52	-
Engine roll restrictor to engine retaining bolt	80	59	-
Wheel knuckle pinch bolt	85	63	-
Wheel hub retaining nut	270	200	-
Steering column lower retaining bolt	25	18	-
A = refer to the procedure for the correct torque sequence			

Front Suspension - Front Suspension

Description and Operation

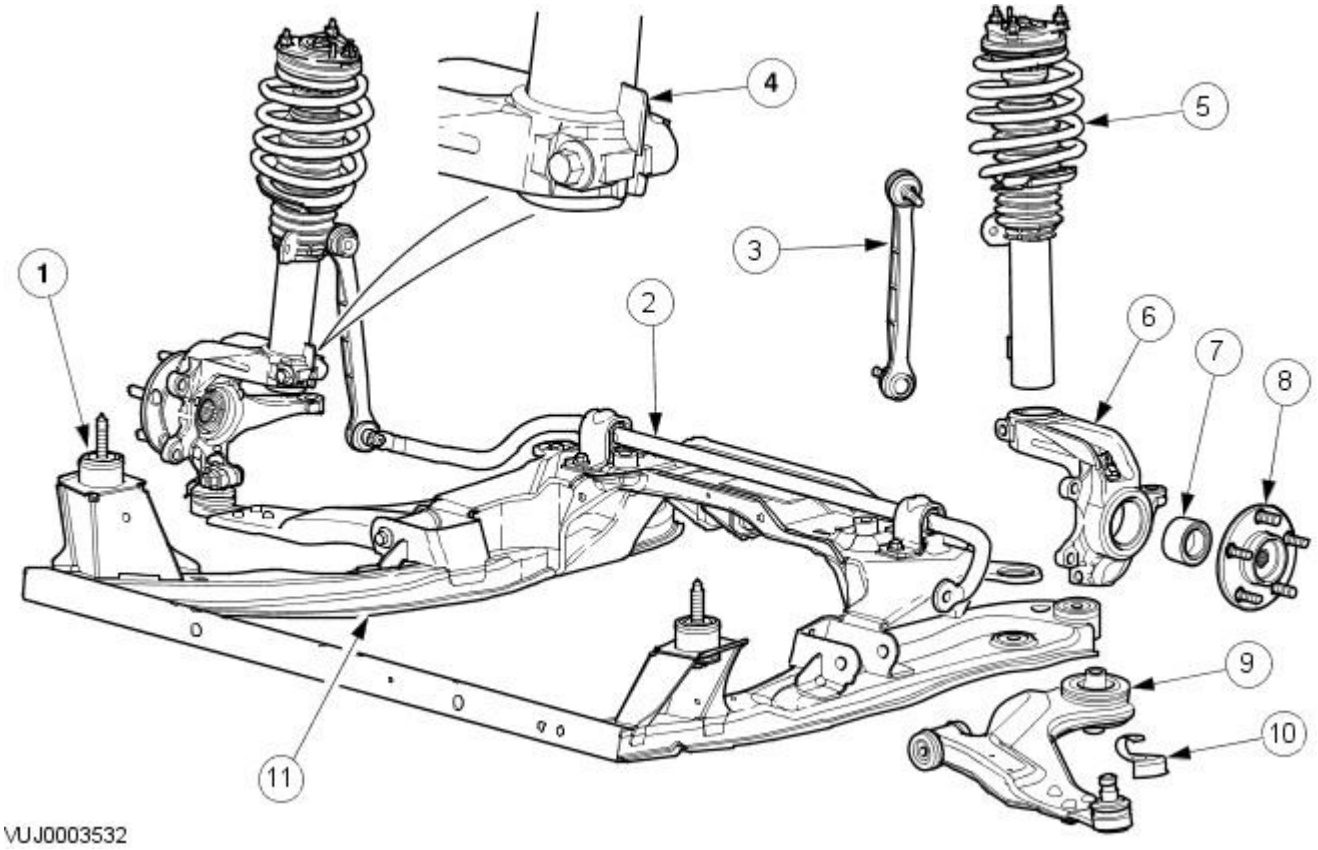

Item	Part Number	Description
1	—	Front subframe mounting bush
2	—	Stabilizer bar
3	—	Stabilizer link bar
4	—	Suspension strut anti slip fin
5	—	Suspension strut spring
6	—	Wheel knuckle
7	—	Wheel hub bearing
8	—	Wheel hub
9	—	Lower arm
10	—	Ball joint heat shield
11	—	Subframe

The front suspension consists of two strut and spring assemblies and a subframe, attached to which are the lower arms and the stabilizer bar.

The lower arm is of a pressed steel, fabricated construction which is attached to the subframe by bolts through horizontal and vertical bushings. The lower arm also carries a ball joint that attaches the lower arm to the wheel knuckle. Each wheel knuckle mounts the halfshaft in a double groove ball bearing which is secured on both sides by a snap ring.

The wheel knuckle also mounts to the strut and tie-rod end.

The stabilizer bar consists of a transverse bar with two ball jointed link bars.

The strut and spring assembly is supported from its upper mounting by a rubber insulator fitted to the strut top mount. A coil spring is located between two seats on the strut. A plastic shield is fitted around the piston to prevent dirt and water ingress. A rubber bump stop is also fitted to protect the strut at its fully compressed condition.

As the road wheel rises, the movement is transmitted to the wheel knuckle, then through the ball joints to the lower arms and the strut and spring assembly. The spring absorbs the shock and the damper damps any unwanted spring frequencies, which could lead to an unstable vehicle.

A stabilizer bar is mounted via clamps and bushes to the front subframe and is connected via link bars to each of the strut and spring assemblies.

When cornering, weight is naturally transferred to the outer wheel and there is a natural tendency for the inner wheel to lift. The stabilizer bar helps to minimize this by transferring some of the apparent rise of outer wheel to the inner wheel through the link bars to the strut and spring assemblies. This helps to provide a smoother ride.

Strut and Spring Assembly

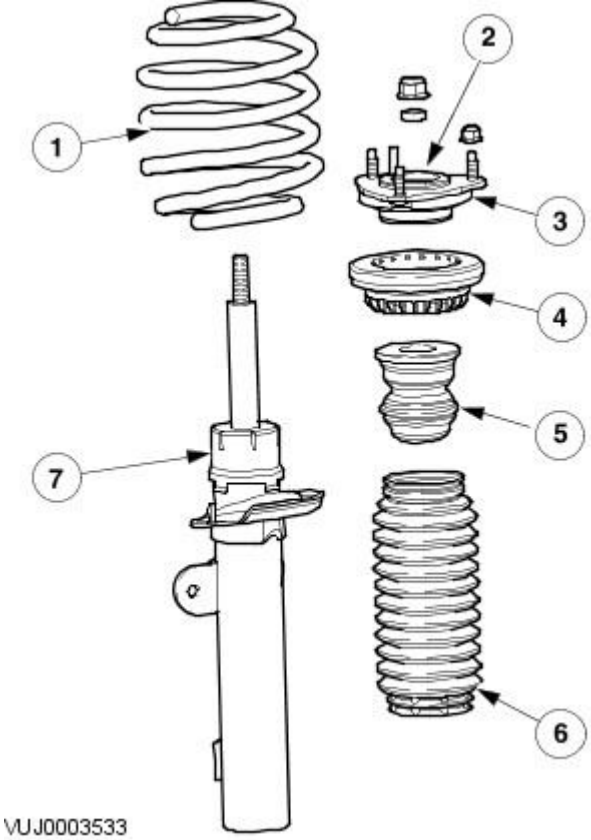

Item	Part Number	Description
1	—	Spring assembly
2	—	Thrust bearing
3	—	Strut and spring top mount
4	—	Spring isolator
5	—	Bump stop
6	—	Damper piston gaiter
7	—	Damper assembly

Published: 11-May-2011

Front Suspension - Front Suspension

Diagnosis and Testing

For additional information, refer to Section 204-00 Suspension System - General Information

Front Suspension - Lower Arm

Removal and Installation

Special Tool(s)	
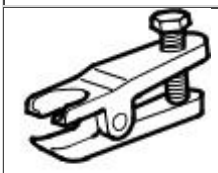 204-192	Separator, Ball Joint 204-192 (JD-219)
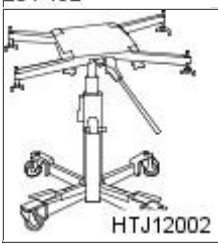 HTJ12002	Powertrain Assembly Jack HTJ1200-2

Removal

All vehicles

1. Position the front wheels in a straight ahead position and centralize the steering wheel.
   - Lock in position and remove the ignition key.
2. Detach the steering column.
   - Remove and discard the steering column lower retaining bolt.

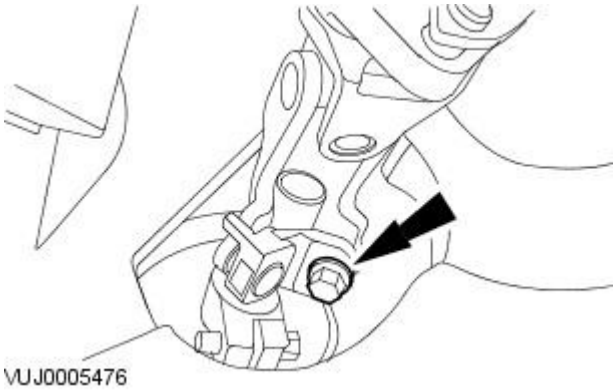

VUJ0005476

3. Remove the front wheel and tire.
   For additional information, refer to: Wheel and Tire (204-04 Wheels and Tires, Removal and Installation).
4. Remove the wheel arch liner access cover.

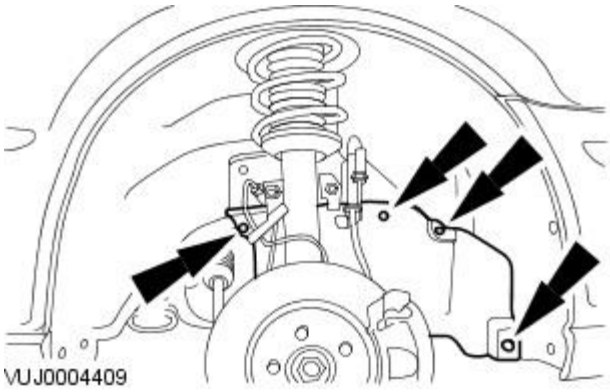

VUJ0004409

5. Remove both the tie-rod end retaining nuts.

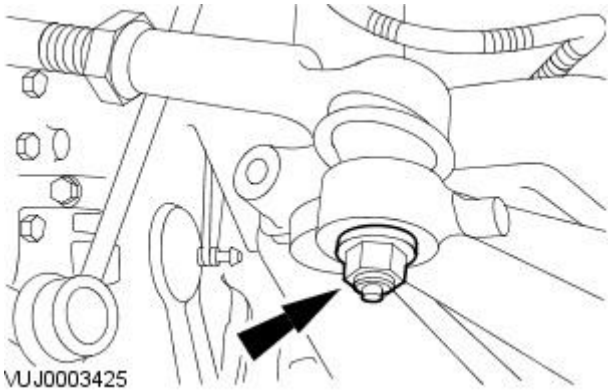

VUJ0003425

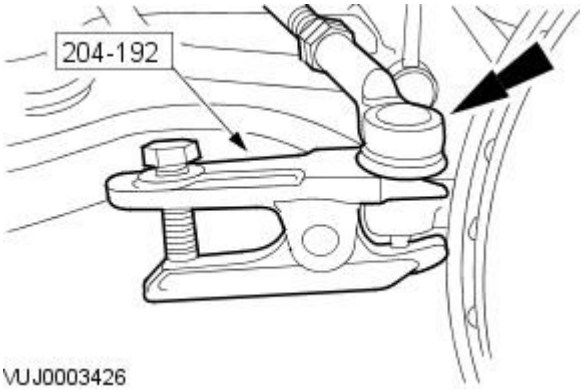

6. NOTE: When the tie-rod end is separated from the wheel hub assembly, the ball joint seal should be protected to prevent damage.

Using the special tool, detach the tie-rod end.

Vehicles with high intensity discharge headlamps

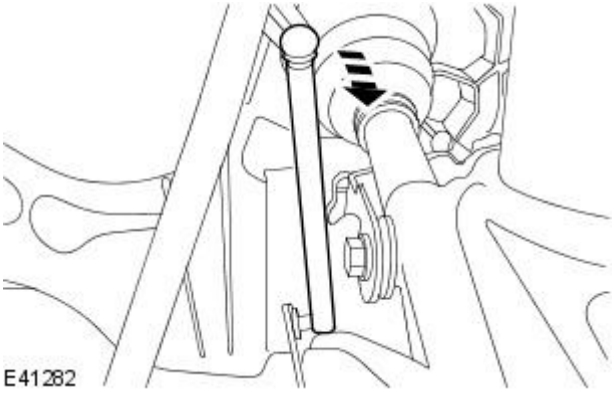

7. Detach the link rod from the headlamp leveling sensor.

All vehicles

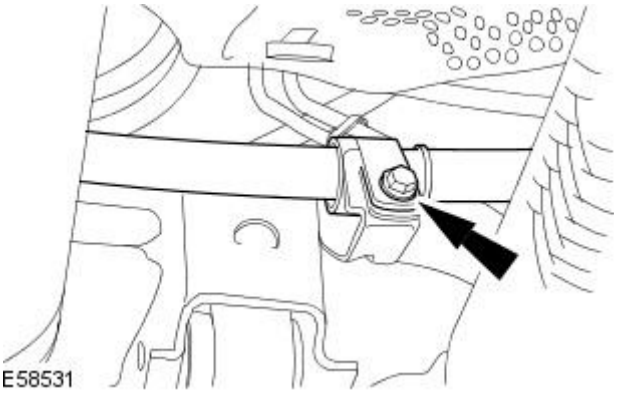

8. Detach the steering gear supply pipe.

Vehicles with automatic transmission

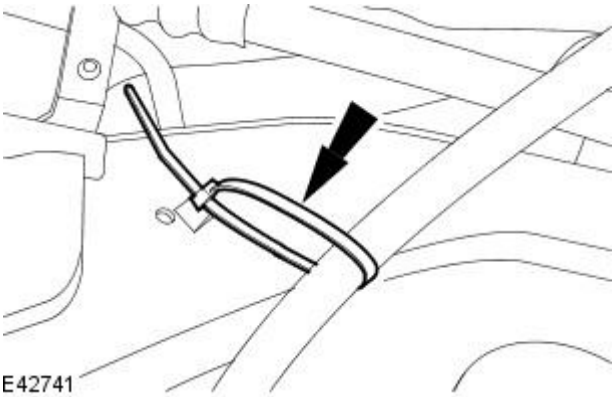

9. Detach the selector lever cable.

All vehicles

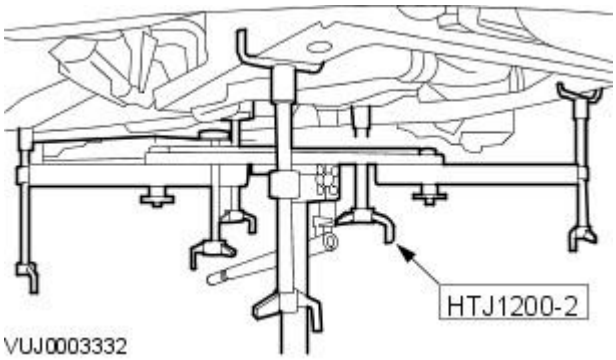

10. Install the special tool.

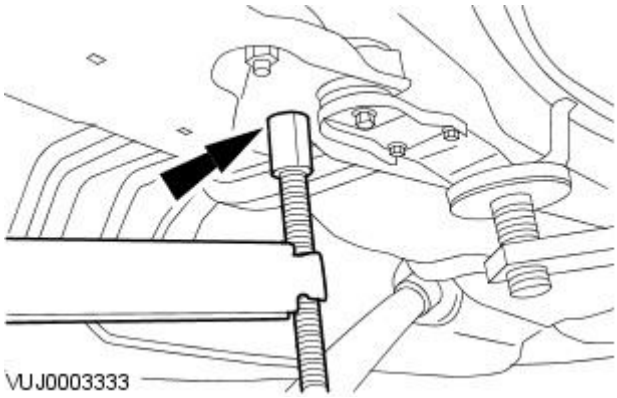

11. NOTE: Left-hand shown, right-hand similar.

Position and adjust the special tool rear height adjuster.

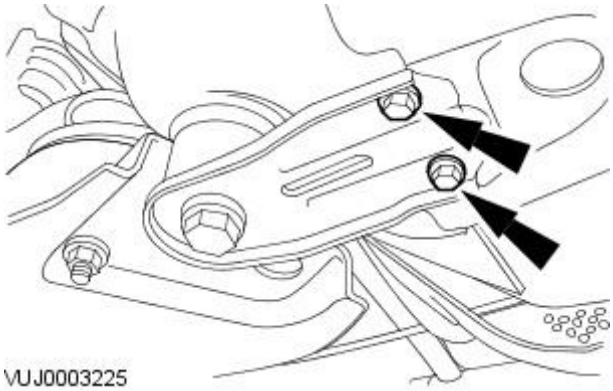

12. NOTE: Left-hand shown, right-hand similar.

Remove the front subframe reinforcement plate retaining bolts.

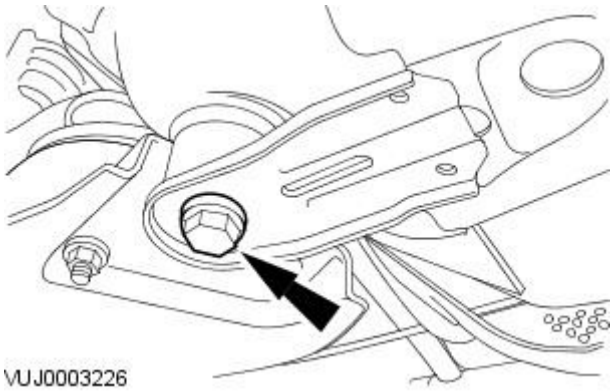

13. NOTE: Left-hand shown, right-hand similar.

Remove the front subframe rear mount retaining bolts.

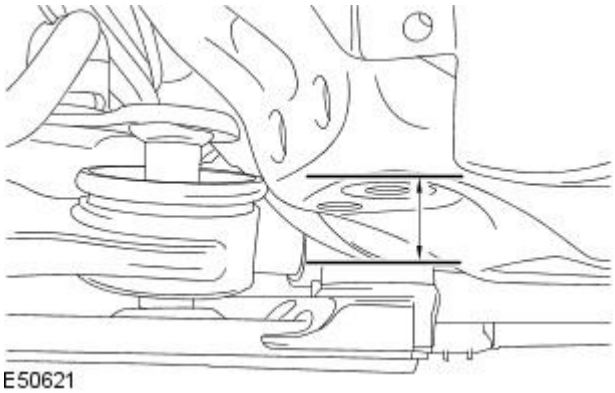

14. WARNING: Rotate the special tool height adjustment valve slowly. Failure to follow this instruction may result in personal injury.

Using the special tool, lower the front subframe to a maximum of 50 mm (1.97 inches).

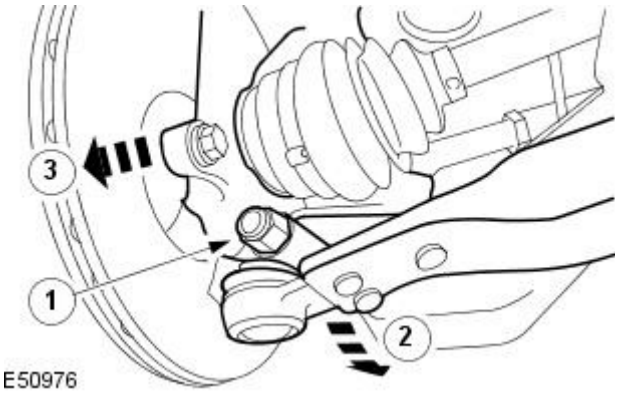

15. CAUTION: To prevent damage to the lower arm bushing, make sure the subframe is lowered before detaching the lower arm ball joint. Failure to follow this instruction may result in damage to the vehicle.

Detach the lower arm from the wheel knuckle.

1. Remove the lower arm ball joint retaining nut and bolt.
2. Reposition the lower arm.
3. Reposition the wheel knuckle.

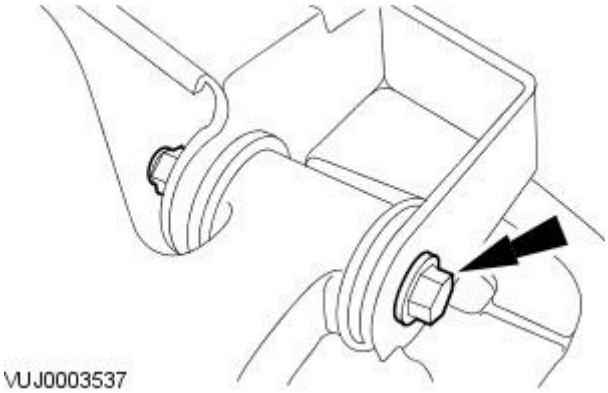

16. Remove and discard the lower arm front retaining bolt.

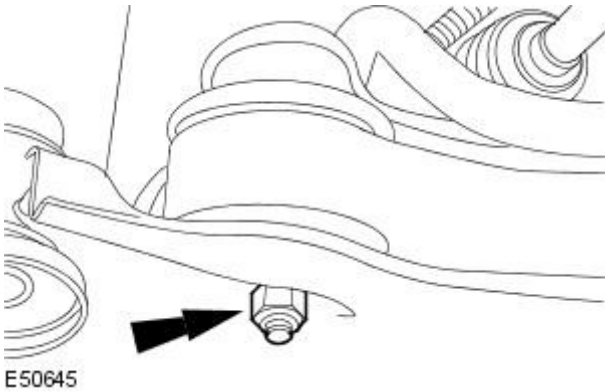

17. Remove and discard the lower arm retaining nut.

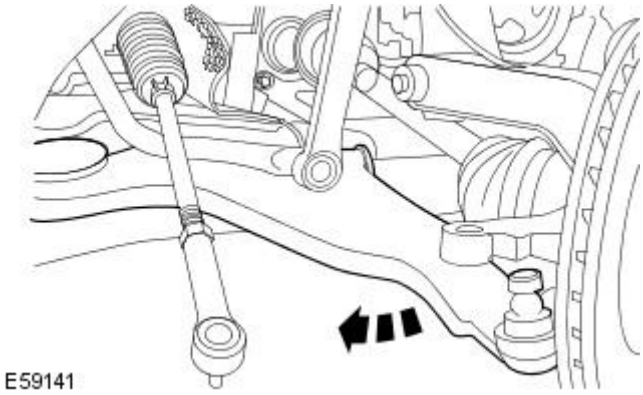

18. Reposition the lower arm.

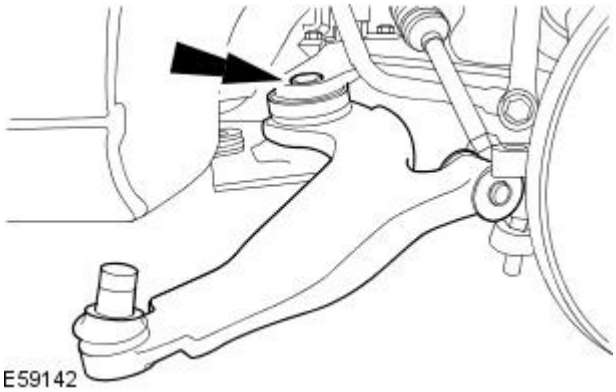

19. Remove the lower arm.

- Remove and discard the lower arm rear retaining bolt.

Installation

All vehicles

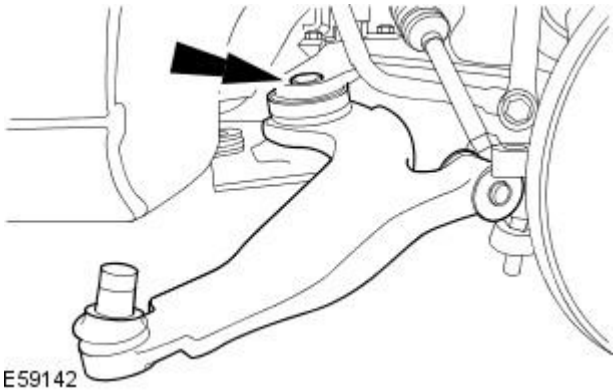

1. Install the lower arm.

- Install a new lower arm rear retaining bolt.

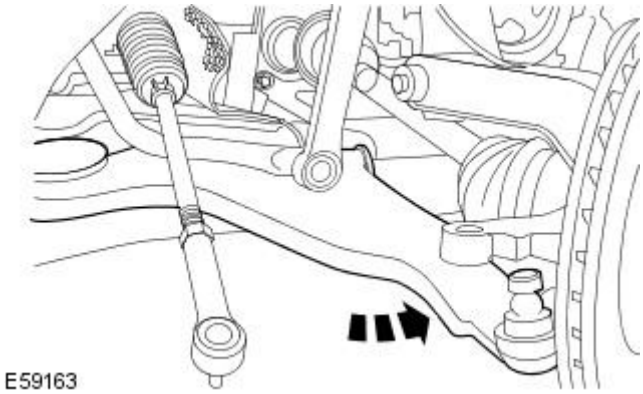

2. Reposition the lower arm.

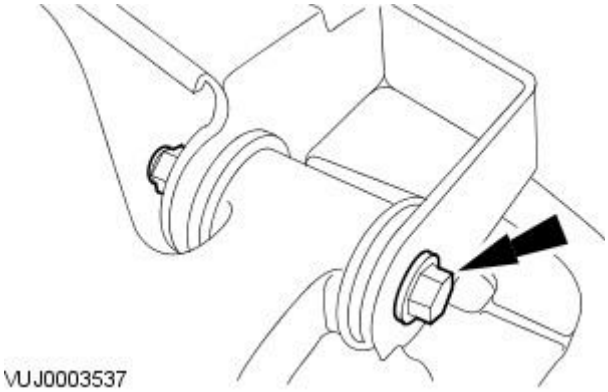

3. NOTE: Install a new retaining bolt.

Loosely install the lower arm front retaining bolt.

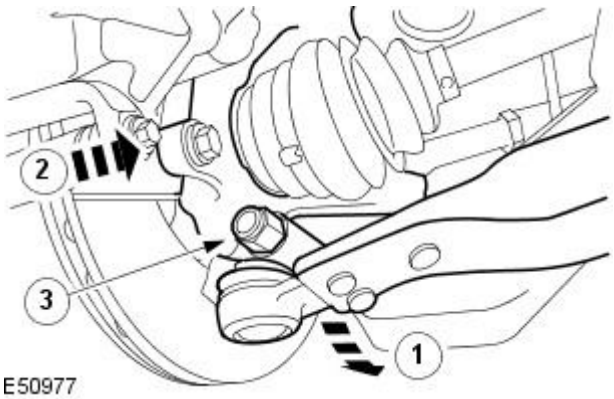

4. NOTE: Install a new retaining nut.

Attach the wheel knuckle.

1. Reposition the lower arm.
2. Attach the wheel knuckle.
3. Install the lower arm ball joint retaining nut and bolt.

- Tighten to 83 Nm.

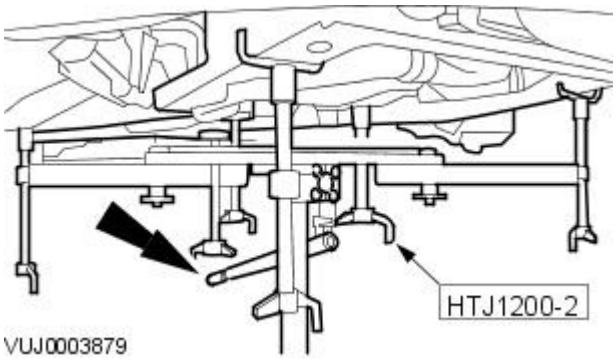

5. Using the special tool raise the front subframe.

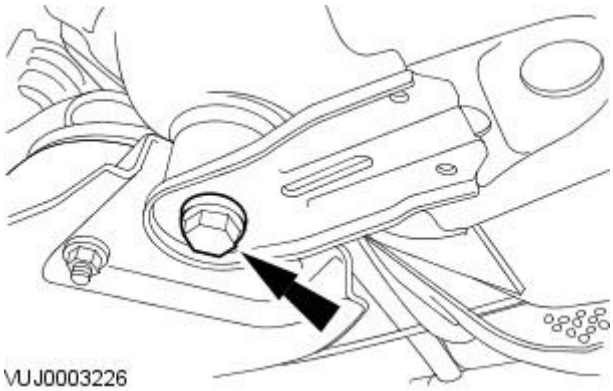

6. NOTE: Left-hand shown, right-hand similar.

Loosely install the front subframe rear mount retaining bolts.

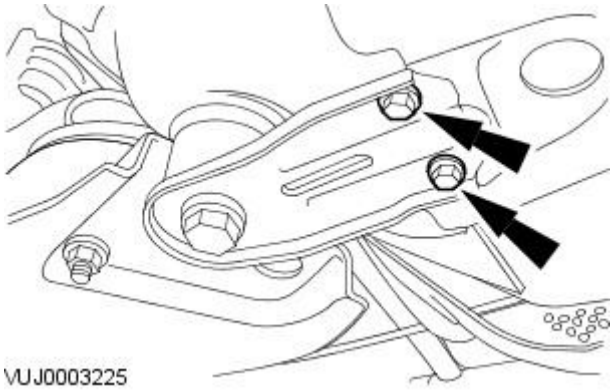

7. NOTE: Left-hand shown, right-hand similar.

Loosely install the front subframe reinforcement plate retaining bolts.

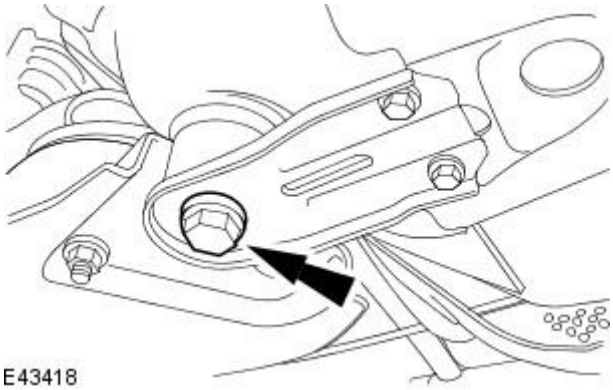

8. NOTE: Left-hand shown, right-hand similar.

Tighten to 142 Nm.

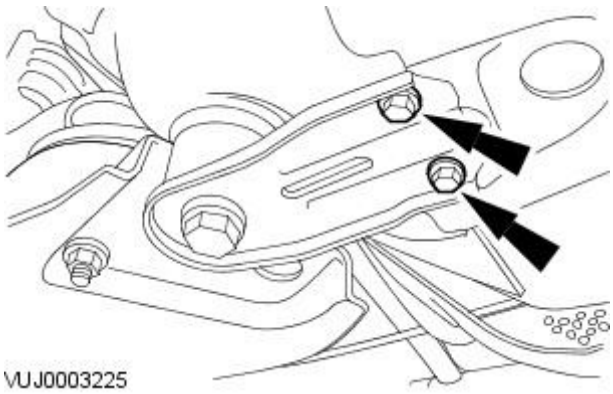

9. NOTE: Left-hand shown, right-hand similar.

Tighten the front subframe reinforcement bolts.

- M8 to 35 Nm.
- M10 to 70 Nm.

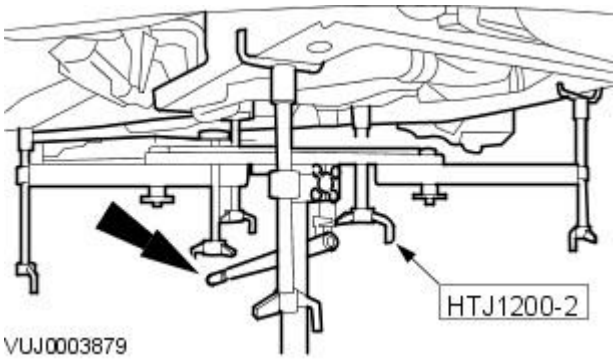

10. Remove the special tool.

Vehicles with automatic transmission

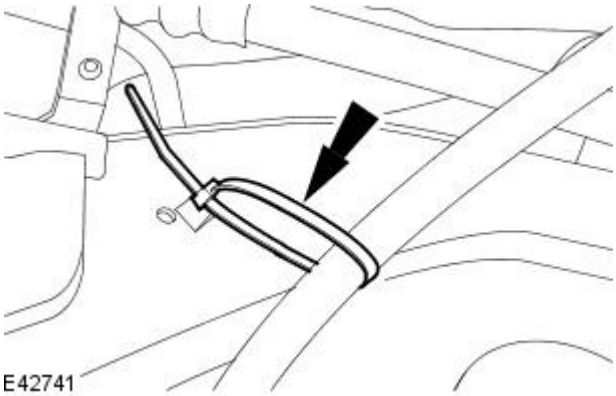

11. Attach the selector lever cable.

All vehicles

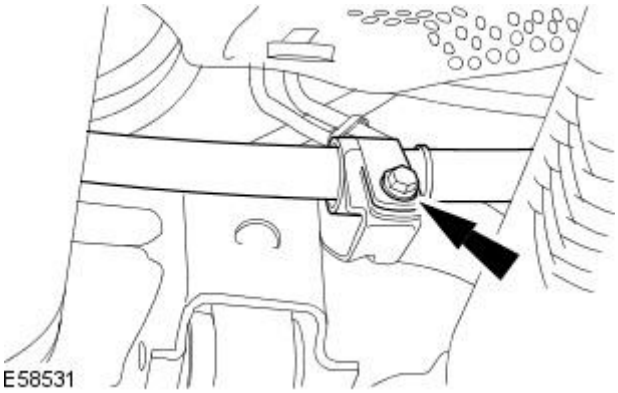

12. Attach the steering gear supply pipe.

Vehicles with high intensity discharge headlamps

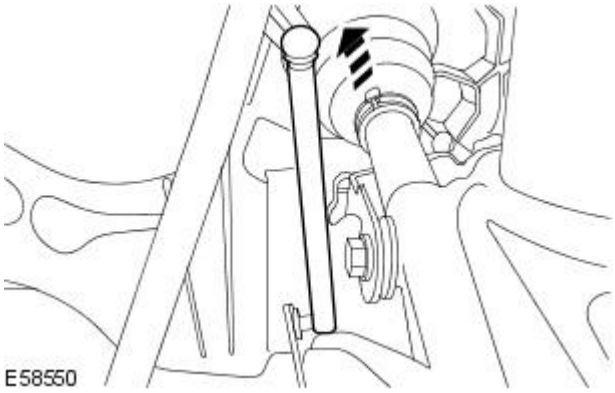

13. Attach the link rod to the headlamp leveling sensor.

All vehicles

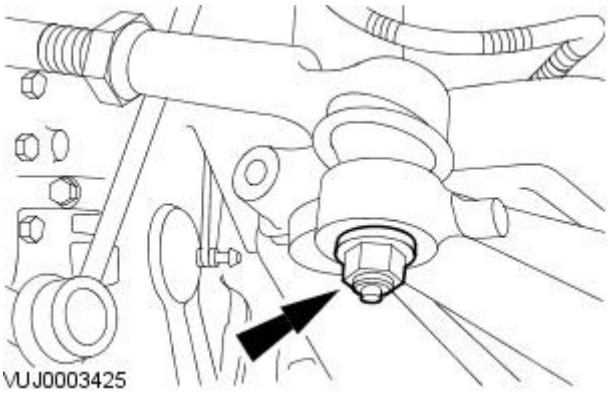

14. NOTE: Right-hand shown, left-hand similar.

Attach both the tie-rod ends.

- Tighten to 35 Nm.

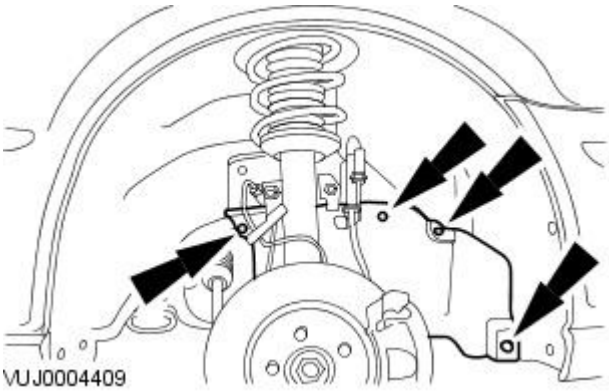

15. Install the right-hand wheel arch liner access cover.

16. Install the front wheels and tires.
For additional information, refer to: Wheel and Tire (204-04 Wheels and Tires, Removal and Installation).

17. Lower the vehicle.

18. NOTE: Install a new retaining bolt.

Attach the steering column.

- Install a new steering column lower retaining bolt.
- Tighten to 25 Nm.

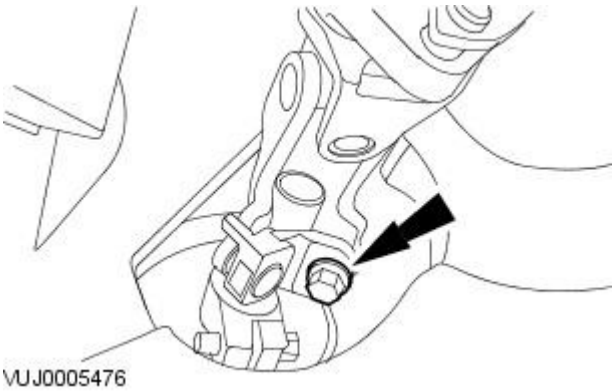

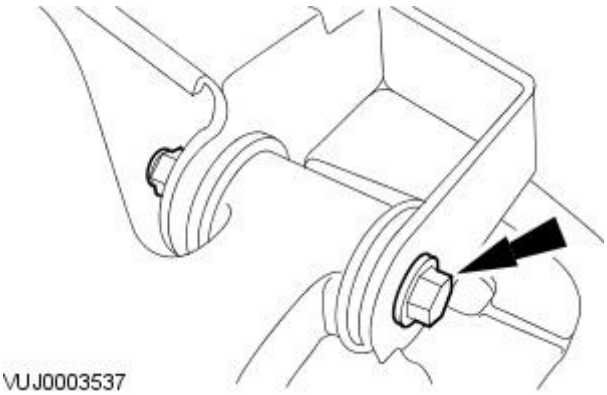

19. CAUTION: The final tightening of the lower arm front retaining bolt, must be carried out with the vehicle on its wheels. Failure to follow this instruction may result in damage to the vehicle.

• NOTE: Right-hand shown, left-hand similar.

Fully tighten the lower arm front retaining bolt.

- Stage 1: Tighten to 90 Nm.
- Stage 2: Tighten 60 degrees.

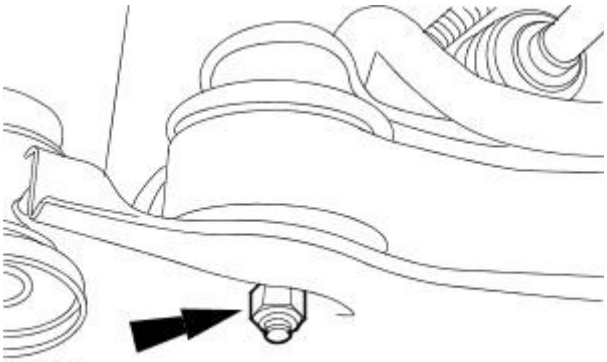

E50645

20. CAUTION: The final tightening of the lower arm rear retaining nut and bolt, must be carried out with the vehicle on its wheels. Failure to follow this instruction may result in damage to the vehicle.

• NOTE: Right-hand shown, left-hand similar.

Fully tighten the lower arm rear retaining nut and bolt.

- Stage 1: Tighten to 90 Nm.
- Stage 2: Tighten 60 degrees.

21. Using the Jaguar approved diagnostic system, configure the steering angle sensor.

Front Suspension - Shock Absorber and Spring Assembly

Removal and Installation

Special Tool(s)	
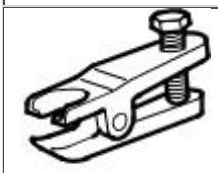 204-192	Separator, Ball Joint 204-192 (JD-219)
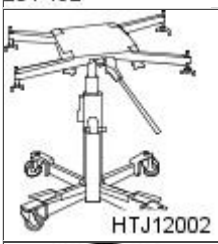 HTJ12002	Powertrain Assembly Jack HTJ1200-2
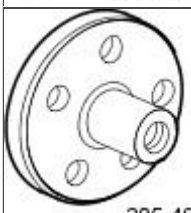 205-491	Wheel hub puller 205-491
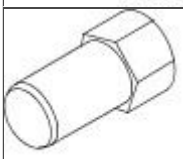 20549101	Adapter nuts 205-491-01
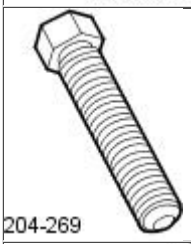 204-269	Forcing screw 204-269
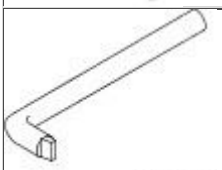 204-159	Knuckle splitter 204-159

Removal

All vehicles

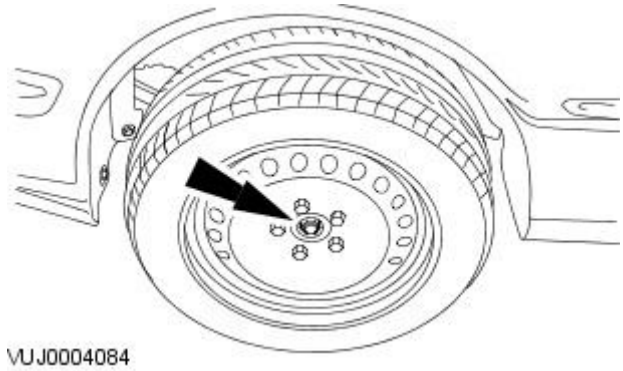

1. Loosen the wheel hub nut.

2. Remove the wheel and tire.
   For additional information, refer to: Wheel and Tire (204-04 Wheels and Tires, Removal and Installation).

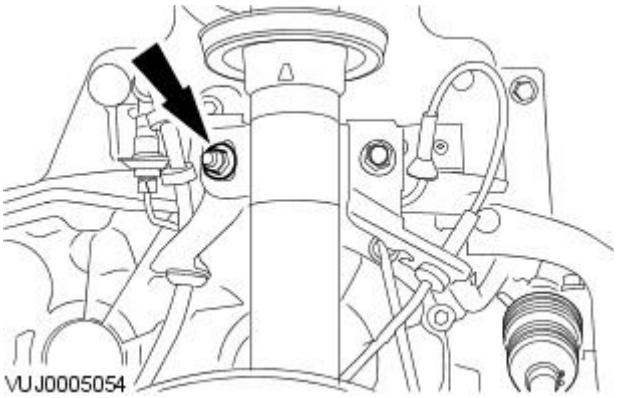

3. Detach the brake hose retaining bracket.

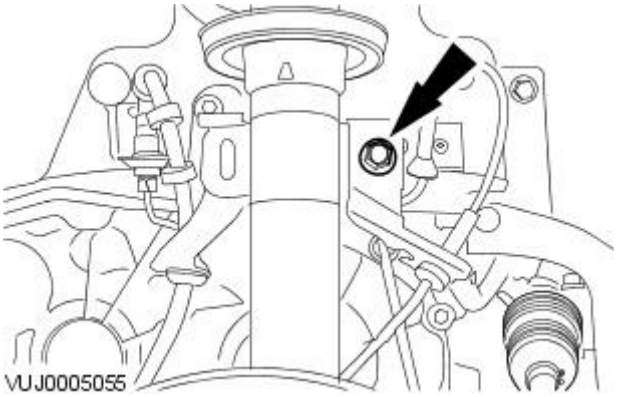

4. Detach the stabilizer link bar.

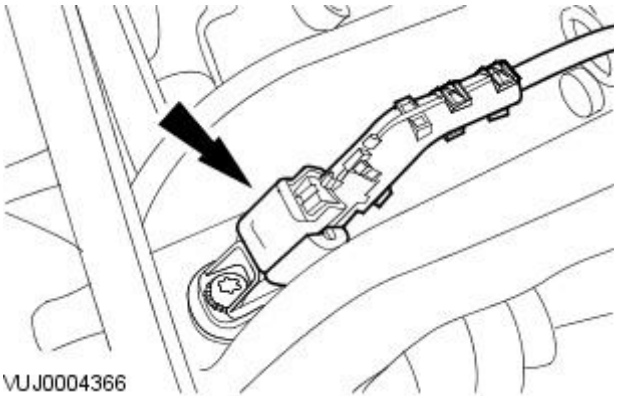

5. Disconnect the front wheel speed sensor electrical connector.

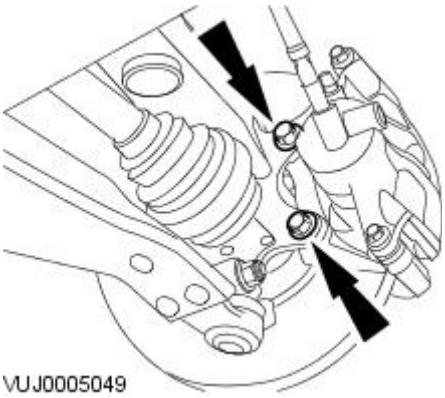

6. CAUTION: Secure the brake caliper and anchor plate assembly to one side.

Remove the brake caliper and anchor plate assembly.

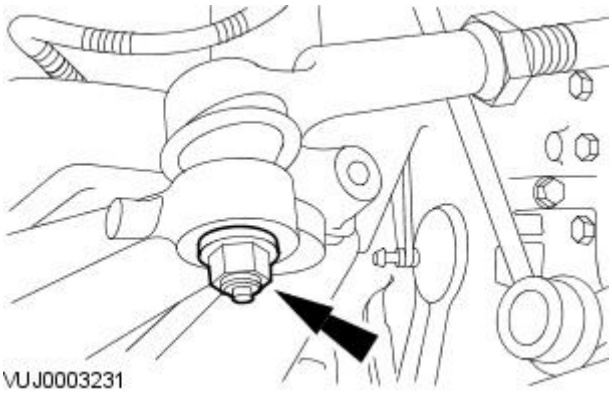

7. Remove the tie-rod end retaining nut.

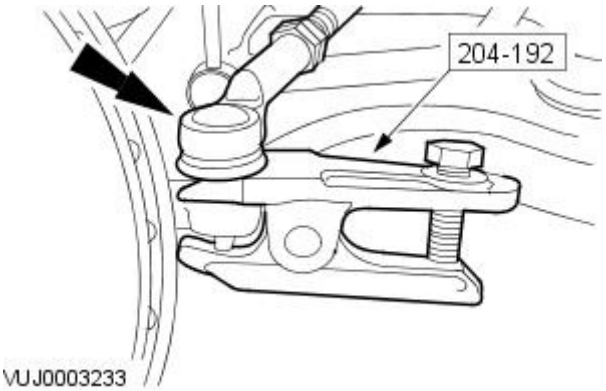

8. NOTE: When the tie-rod end is separated from the wheel hub assembly, the ball joint seal should be protected to prevent damage.

Using the special tool, detach the tie-rod end.

Vehicles with high intensity discharge headlamps

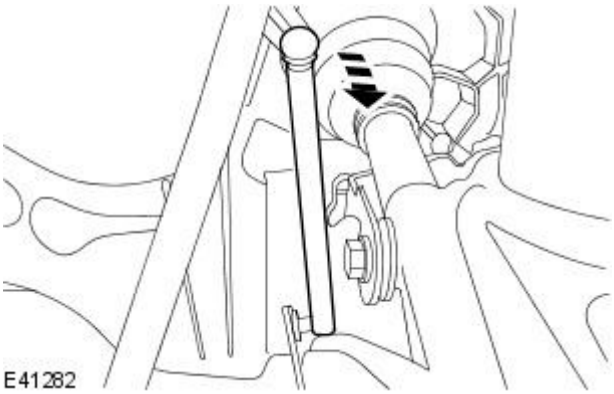

9. Detach the link rod from the headlamp leveling sensor.

All vehicles

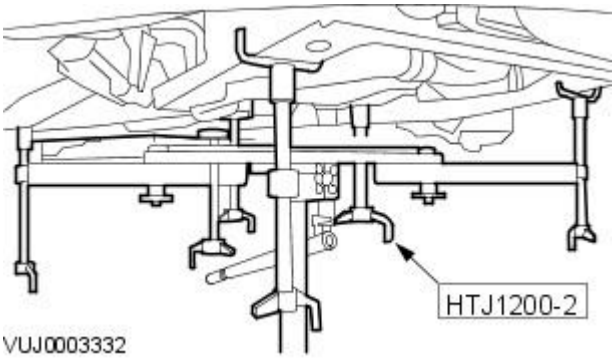

10. Install the special tool.

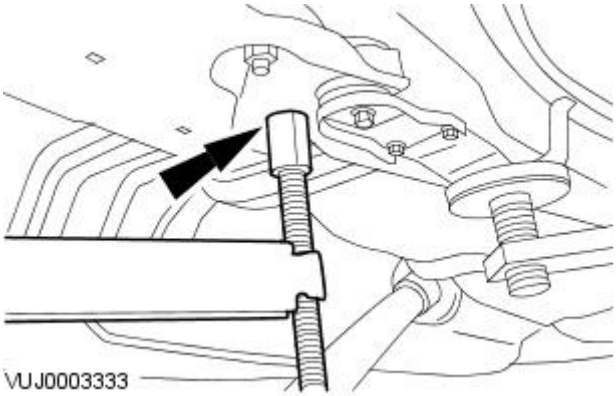

11. NOTE: Left-hand shown, right-hand similar.

Position and adjust the special tool rear height adjuster.

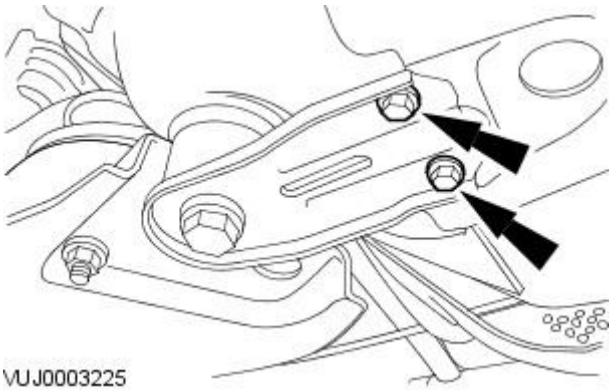

12. NOTE: Left-hand shown, right-hand similar.

Remove the front subframe reinforcement plate retaining bolts.

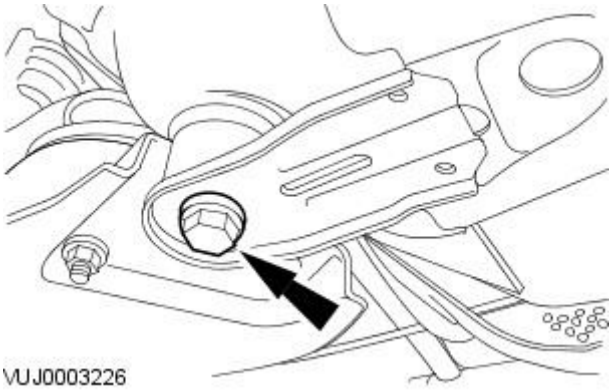

13. NOTE: Left-hand shown, right-hand similar.

Remove the front subframe rear mount retaining bolts.

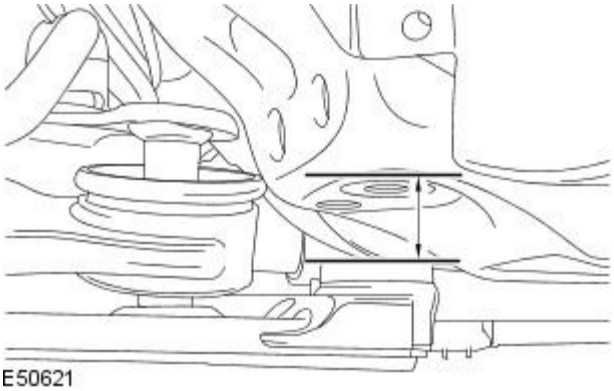

14. Using the special tool, lower the front subframe to a maximum of 30 mm (1.18 inches).

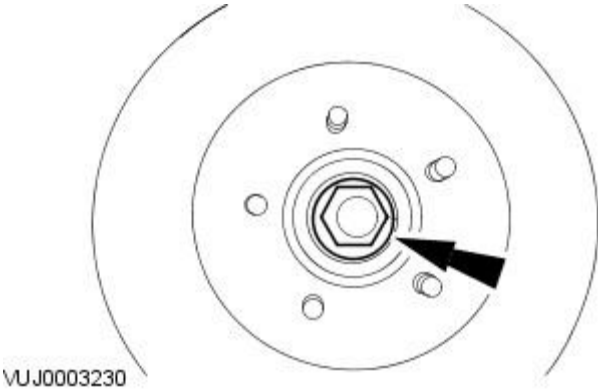

15. Remove and discard the wheel hub nut.

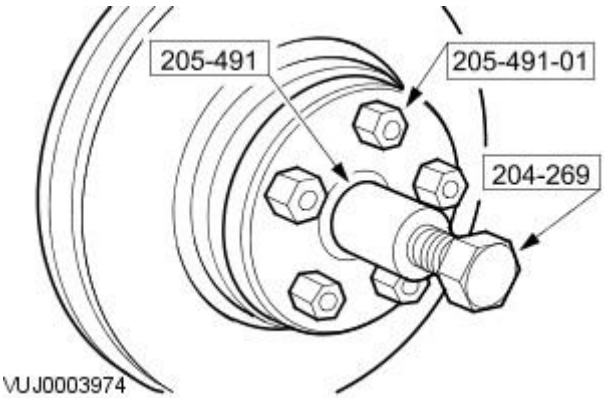

16. Using special tools, detach the halfshaft.

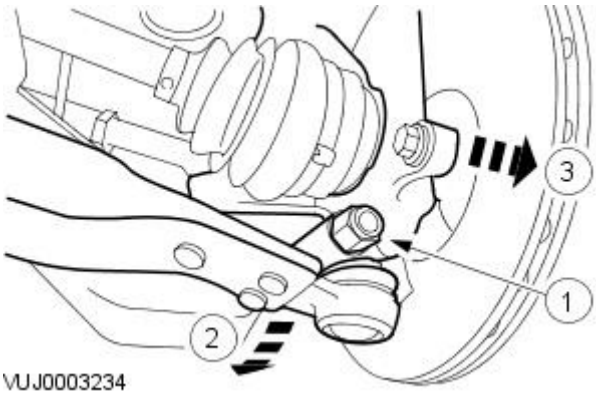

17. CAUTION: To prevent damage to the lower arm bushing, make sure the subframe is lowered before detaching the lower arm ball joint.

Detach the wheel knuckle.

1. Remove the lower arm ball joint retaining nut and bolt.
2. Reposition the lower arm.
3. Detach the wheel knuckle from the halfshaft.
    1. Remove and discard the lower arm ball joint shield.

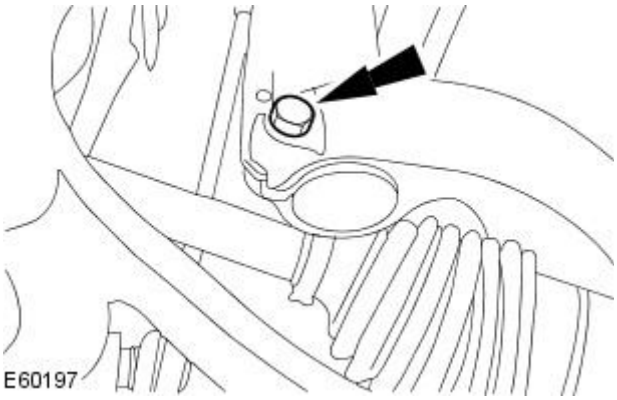

18. Remove the wheel knuckle pinch bolt.

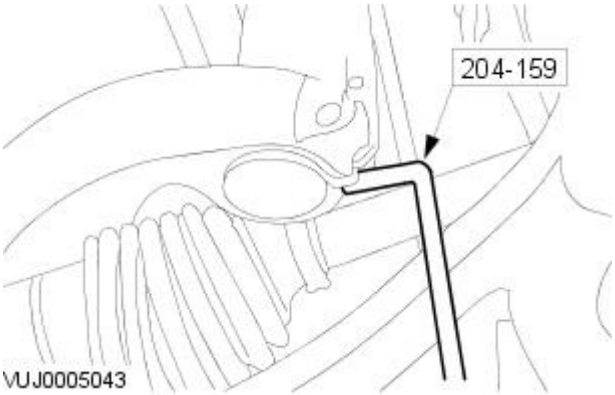

19. Using the special tool, remove the wheel knuckle.

- Using the special tool, spread the wheel knuckle.
- Remove the wheel knuckle.

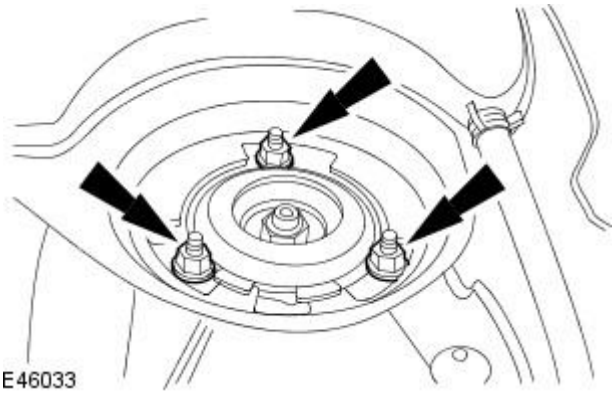

20. NOTE: Note the orientation of the retaining stud marked with a paint spot.

Remove the strut and spring assembly.

Installation

All vehicles

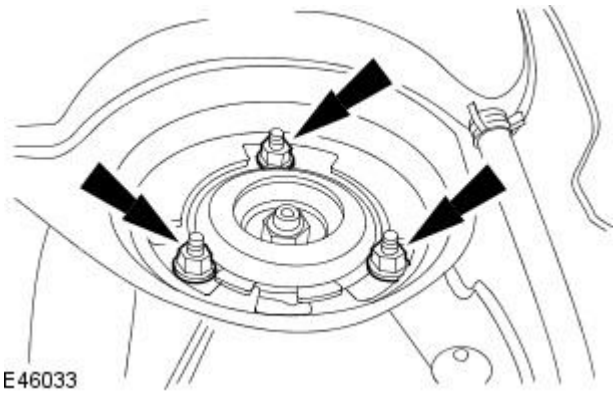

1. NOTE: Make sure orientation arrow on the strut top rubber mount faces from front to rear of the vehicle.

• NOTE: Make sure the retaining stud marked with a paint spot is correctly orientated.

Install the strut and spring assembly.

- Tighten to 25 Nm.

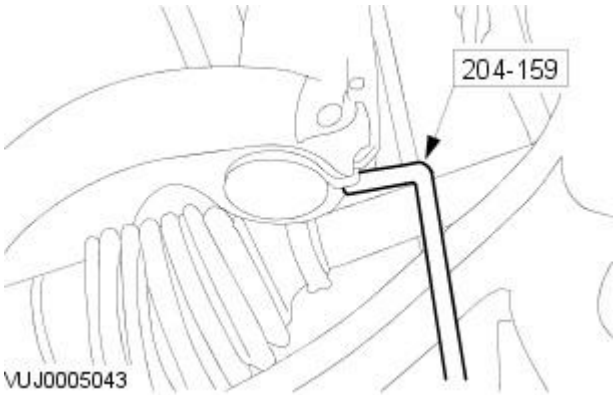

2. Using the special tool, install the wheel knuckle.

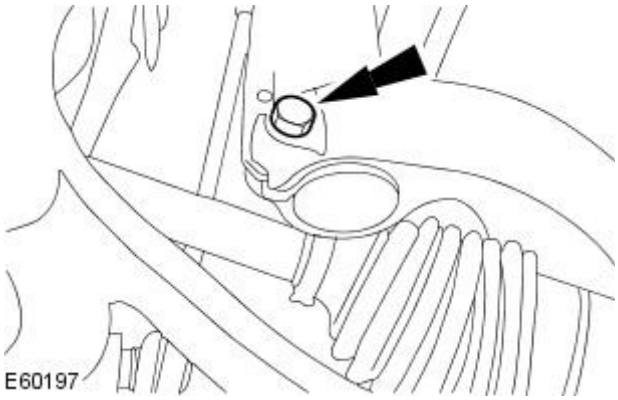

3. Install the wheel knuckle pinch bolt.

- Tighten to 85 Nm.

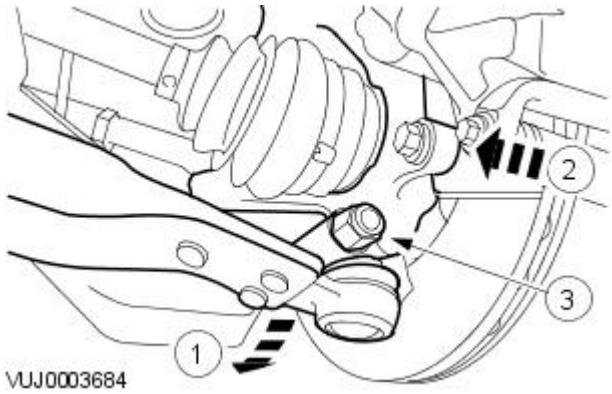

4. NOTE: Install a new retaining nut.

• NOTE: Install a new lower arm ball joint shield.

Attach the wheel knuckle.

1. Reposition the lower arm.
2. Attach the wheel knuckle to the halfshaft.
3. Install the lower arm ball joint retaining nut and bolt.

- Tighten to 83 Nm.

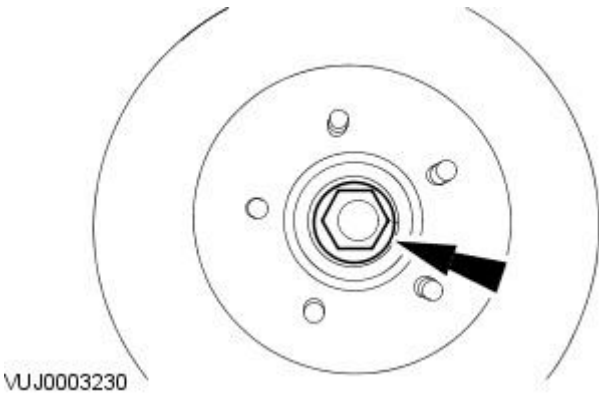

5. Loosely install the new wheel hub nut.

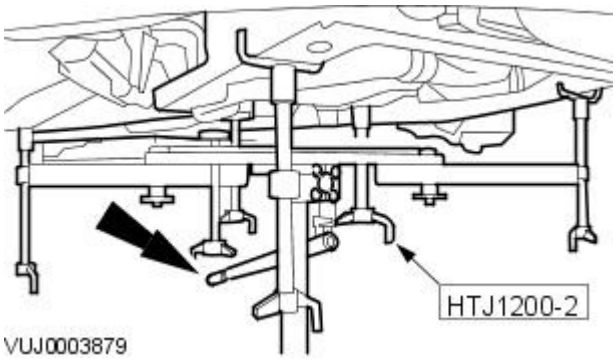

6. Using the special tool raise the front subframe.

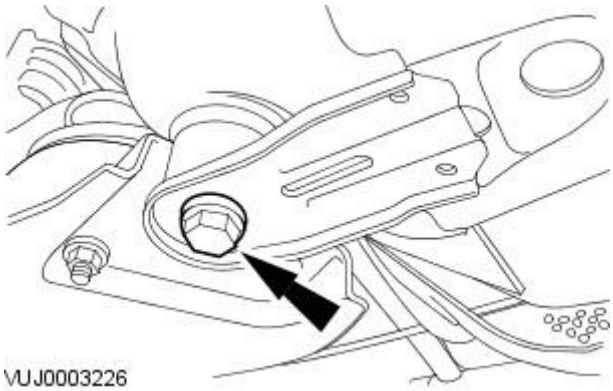

7. NOTE: Left-hand shown, right-hand similar.

Loosely install the front subframe rear mount retaining bolts.

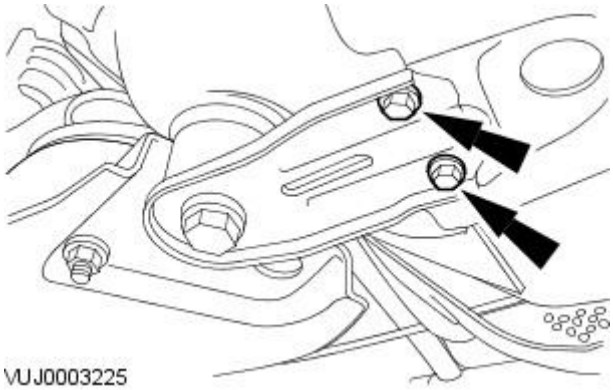

8. NOTE: Left-hand shown, right-hand similar.

Loosely install the front subframe reinforcement plate retaining bolts.

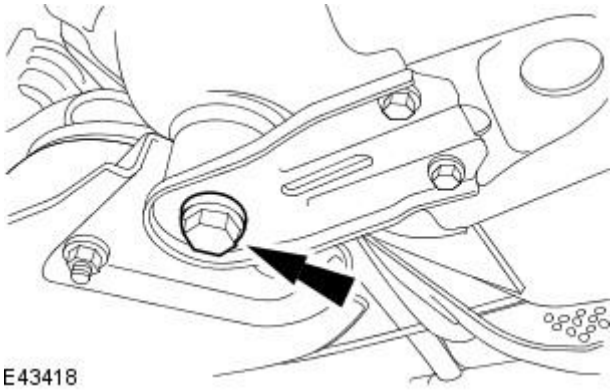

9. NOTE: Left-hand shown, right-hand similar.

Tighten the front subframe rear mount retaining bolts.

- Tighten to 142 Nm.

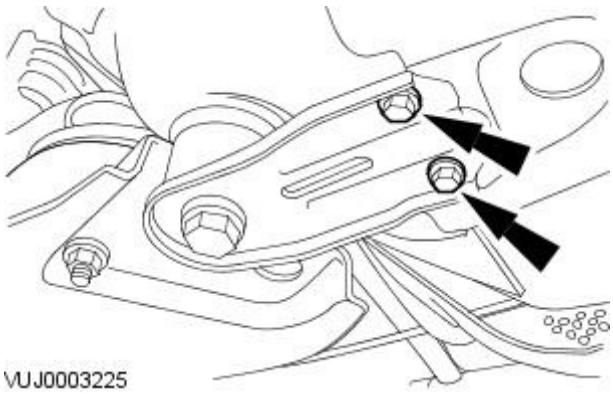

10. NOTE: Left-hand shown, right-hand similar.

Tighten the front subframe reinforcement bolts.

- M8 to 35 Nm.
- M10 to 70 Nm.

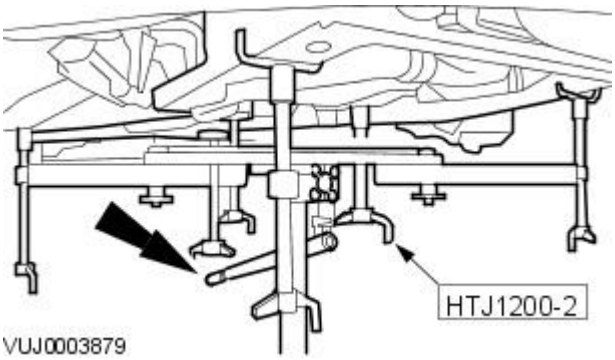

11. Remove the special tool.

Vehicles with high intensity discharge headlamps

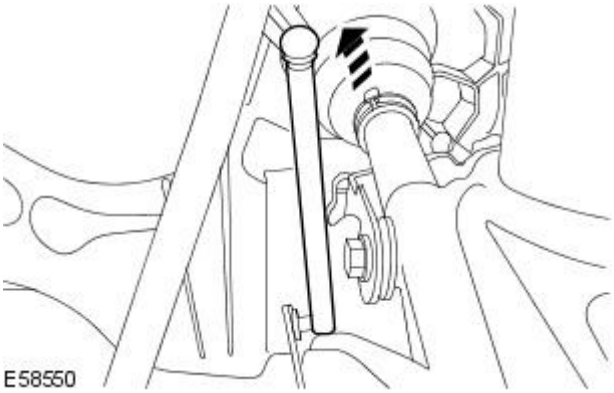

12. Attach the link rod to the headlamp leveling sensor.

All vehicles

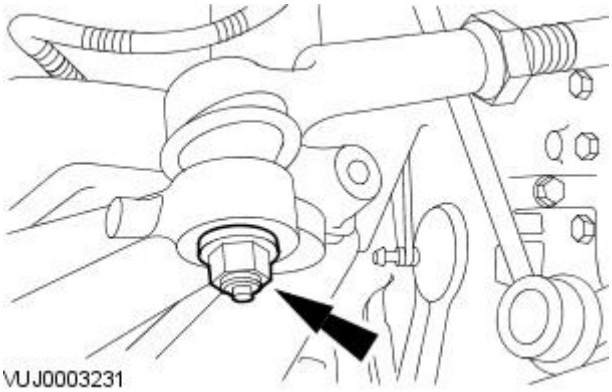

13. Attach the tie-rod end.

- Tighten to 35 Nm.

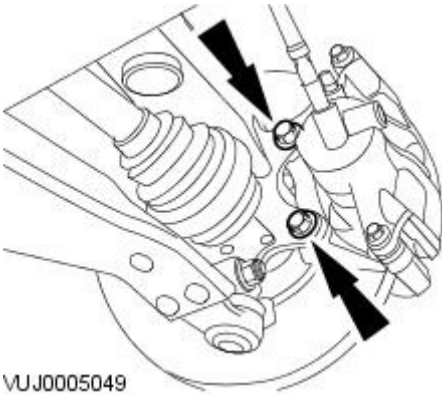

14. Attach the brake caliper and anchor plate assembly.

- Tighten to 133 Nm.

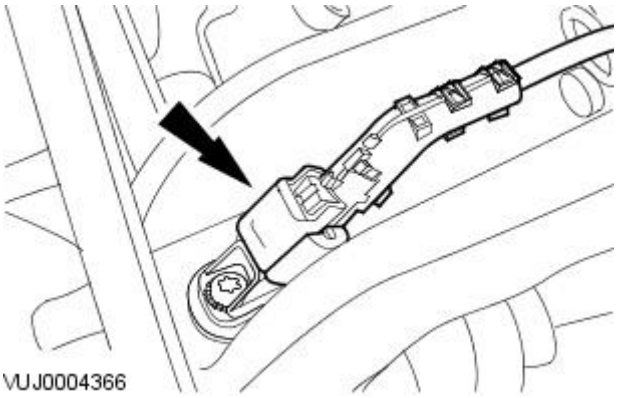

15. Connect the front wheel speed sensor electrical connector.

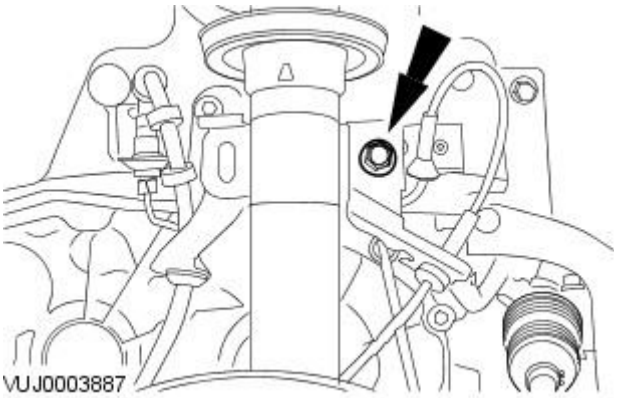

16. Attach the stabilizer link bar.

- Tighten to 48 Nm.

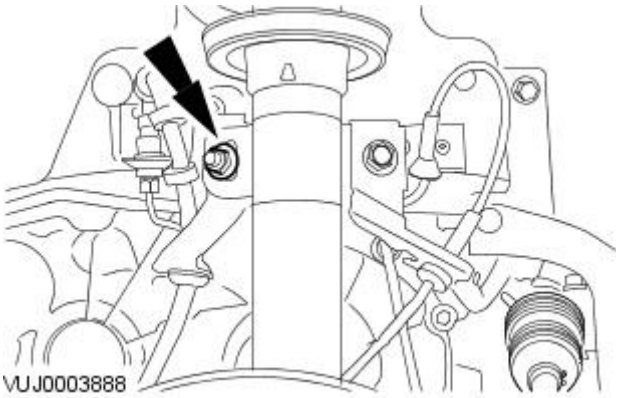

17. Attach the brake hose retaining bracket.

- Tighten to 48 Nm.

18. Install the wheel and tire.
For additional information, refer to: Wheel and Tire (204-04 Wheels and Tires, Removal and Installation).

19. Tighten the wheel hub nut.

- Tighten to 330 Nm.

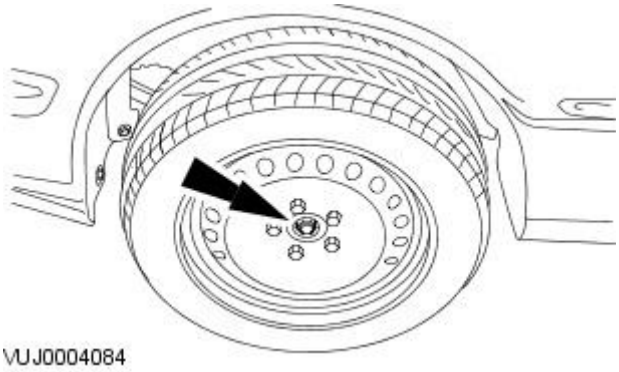

Front Suspension - Front Stabilizer Bar

Removal and Installation

Removal

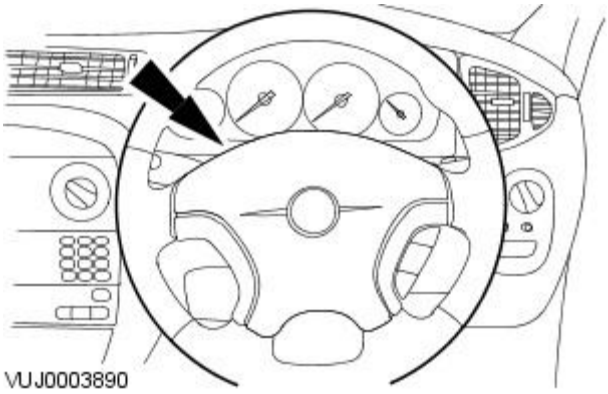

1. NOTE: Make sure the road wheels are in the straight ahead position.

   Centralize the steering and lock it in position.

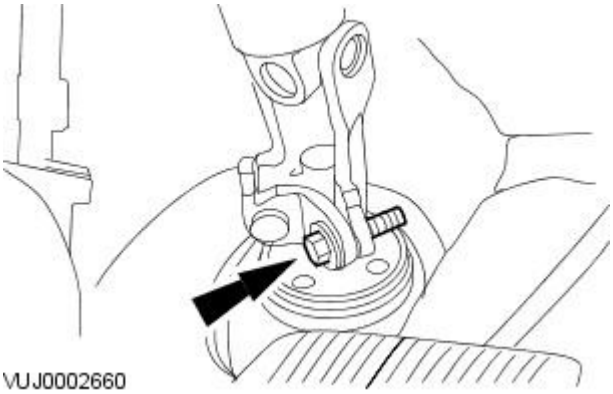

2. Remove the steering column lower retaining bolt.

3. Remove the front subframe. For additional information, refer toSection 502-00 Uni-Body, Subframe and Mounting System.
4. Remove the stabilizer bar.

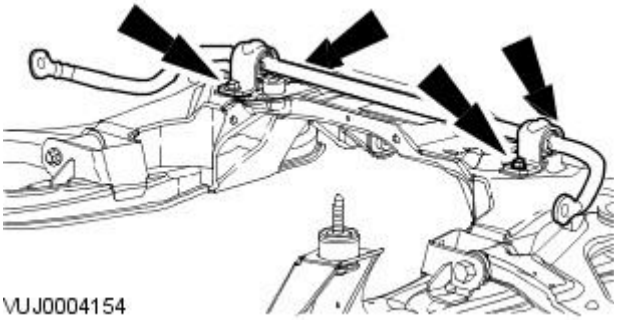

Installation

1. NOTE: Install new stablizer bar bushes when replacing the stablizer bar.

   To install, reverse the removal procedure.
2. Tighten to 48 Nm.

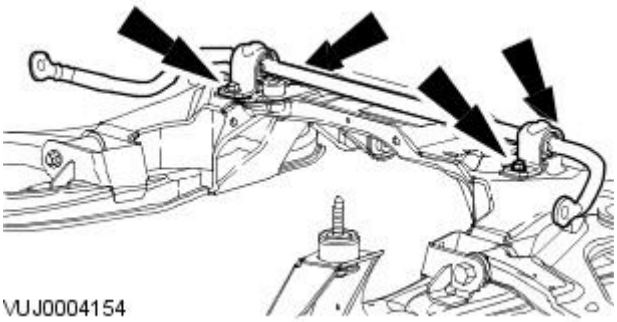

3. Carry out front subframe alignment. For additional information, refer toSection 502-00 Uni-Body, Subframe and Mounting System.

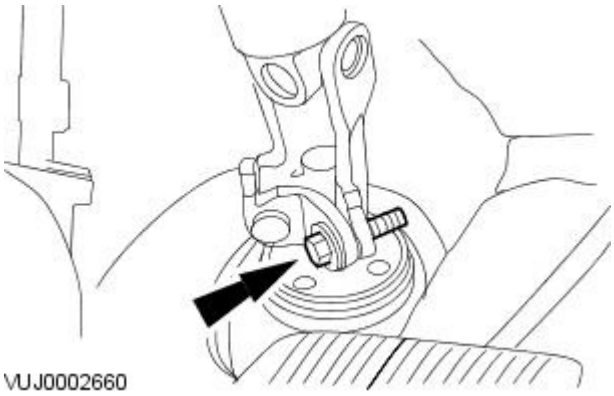

4. Tighten to 26 Nm.

Front Suspension - Front Stabilizer Bar Bushing

Removal and Installation

Special Tool(s)	
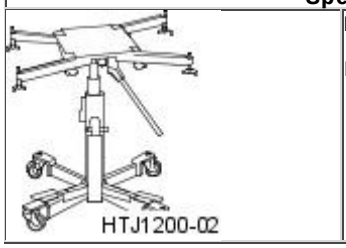	Powertrain assembly jack HTJ1200-02

Removal

All vehicles

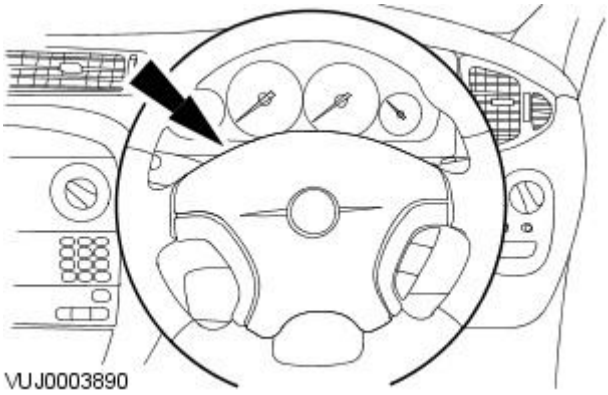

1. Center the steering wheel.

- Lock in position and remove the ignition key.

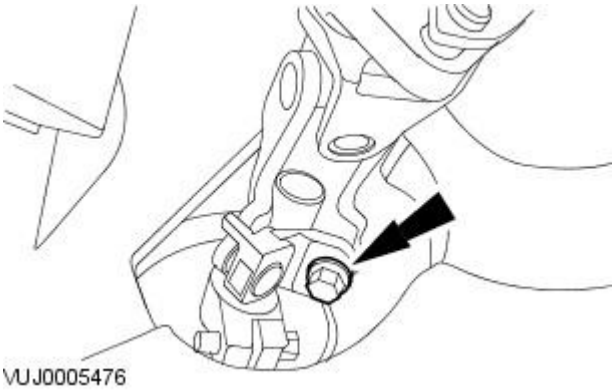

2. Detach the steering column.

- Remove and discard the extension shaft lower retaining bolt.

3. Remove the front wheels and tires.
For additional information, refer to: Wheel and Tire (204-04 Wheels and Tires, Removal and Installation).

Vehicles with high intensity discharge headlamps

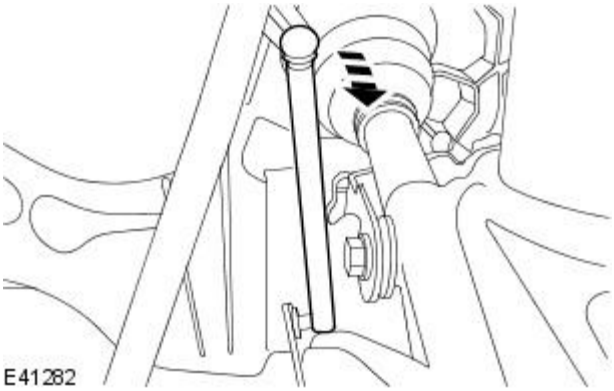

4. Detach the link rod from the headlamp leveling sensor.

Vehicles with diesel engine

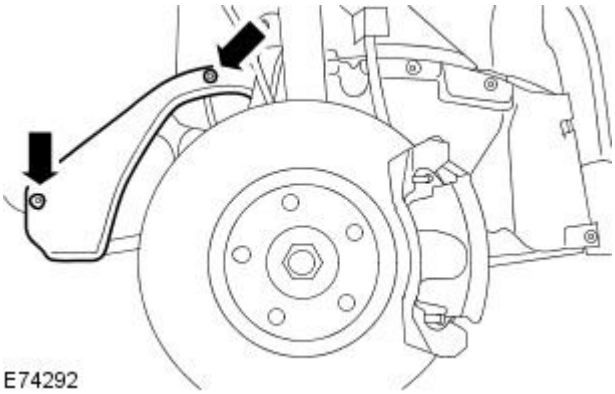

5. NOTE: Right-hand shown, left-hand similar.

Remove the wheel arch liner access panel.

6. Remove the air deflector.
For additional information, refer to: Air Deflector - 2.0L Duratorq-TDCi/2.2L Duratorq-TDCi (110kW/150PS) - Puma (501-02 Front End Body Panels, Removal and Installation).

All vehicles

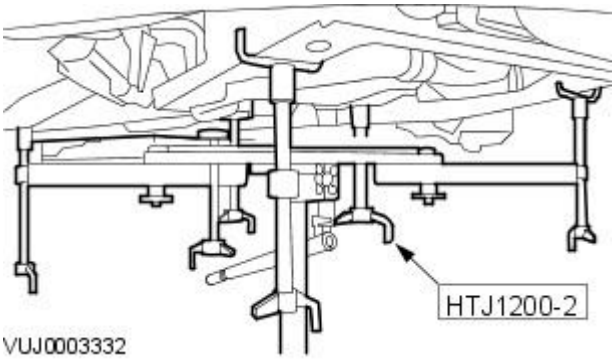

7. Install the special tool.

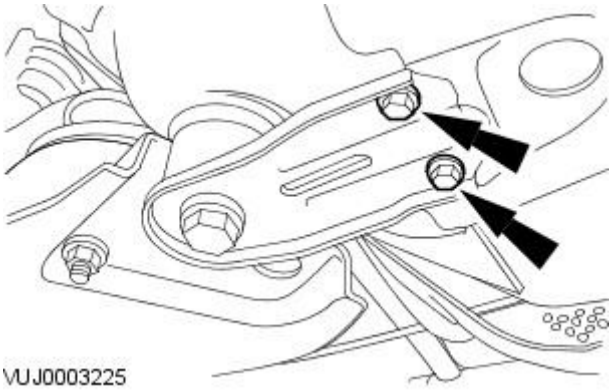

8. NOTE: Left-hand shown, right-hand similar.

Remove the front subframe reinforcement plate retaining bolts.

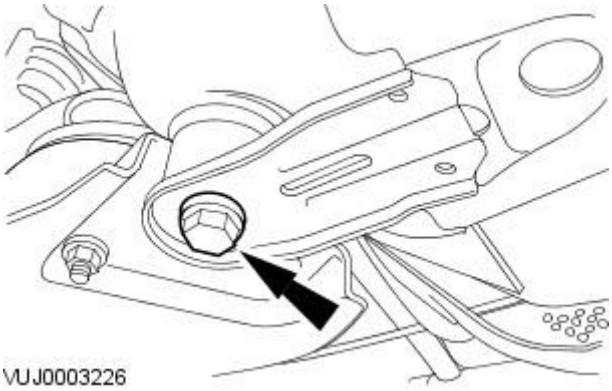

9. NOTE: Left-hand shown, right-hand similar.

Remove the front subframe rear mount retaining bolts.

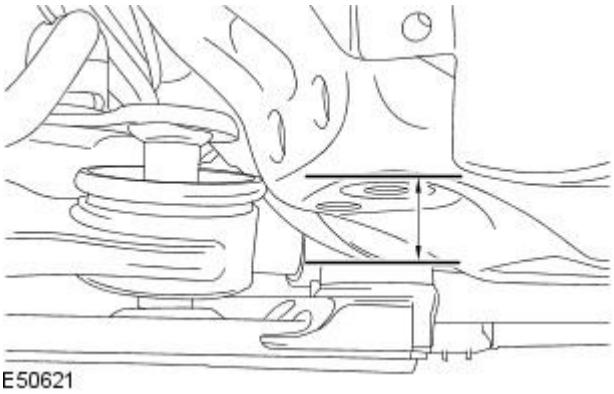

10. WARNING: Rotate the special tool height adjustment valve slowly. Failure to follow this instruction may result in personal injury.

Using the special tool, lower the rear of the front subframe to a maximum of 50 mm (1.97 inches).

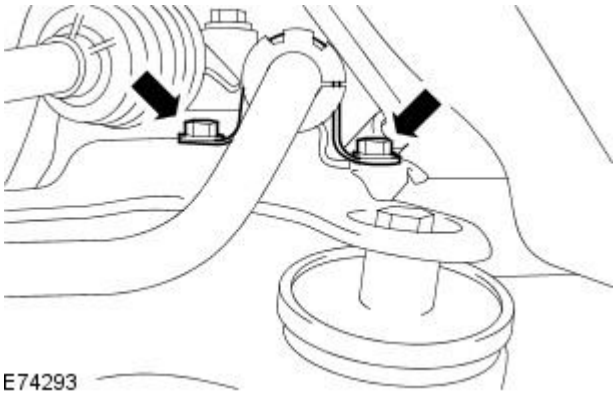

11. NOTE: Left-hand shown, right-hand similar.

Remove the stabilizer bar bush retaining bracket.

- Remove the retaining bolts.

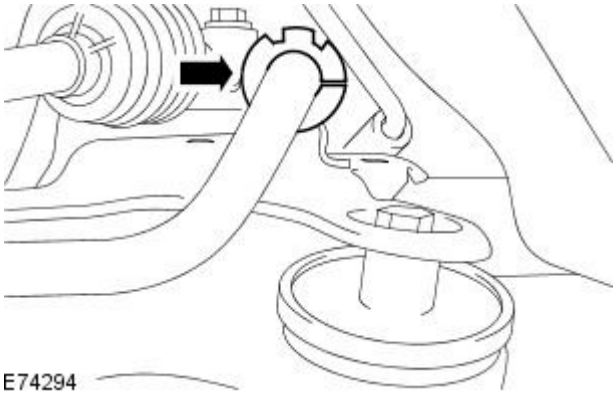

12. NOTE: Left-hand shown, right-hand similar.

Remove the stabilizer bar bush.

Installation

All vehicles

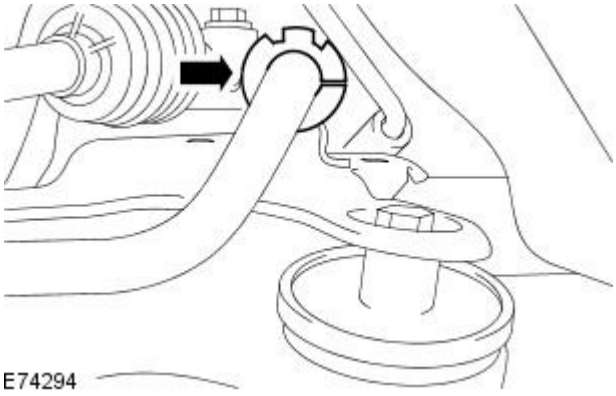

1. NOTE: Left-hand shown, right-hand similar.

Install the stabilizer bar bush.

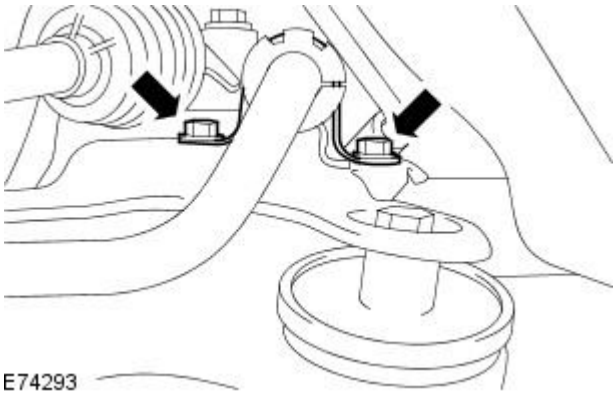

2. NOTE: Left-hand shown, right-hand similar.

Install the stabilizer bar bush retaining bracket.

- Tighten the retaining bolts to 48 Nm.

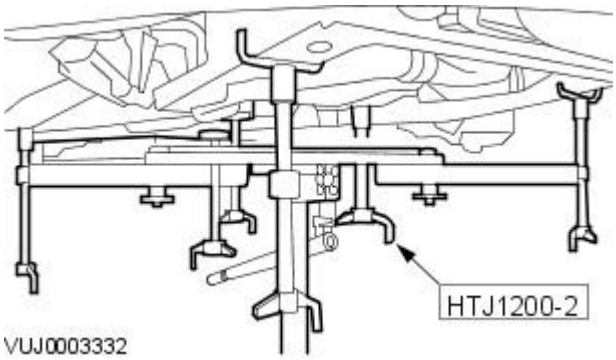

3. Using the special tool, raise the rear of the front subframe.

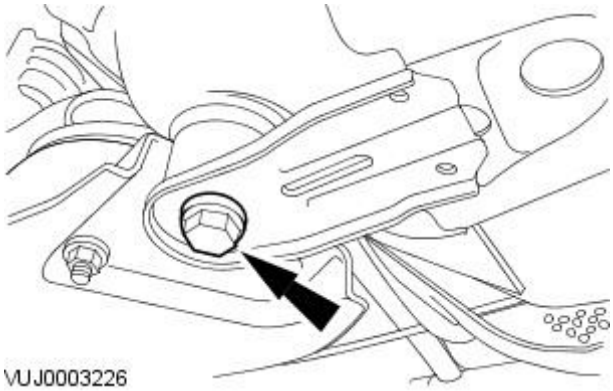

4. NOTE: Left-hand shown, right-hand similar.

Loosely install the front subframe rear mount retaining bolts.

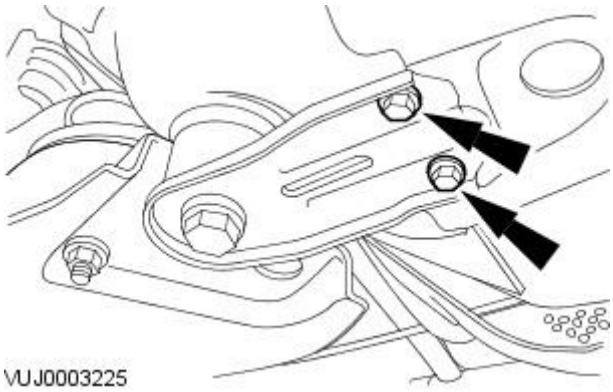

5. NOTE: Left-hand shown, right-hand similar.

Loosely install the front subframe reinforcement plate retaining bolts.

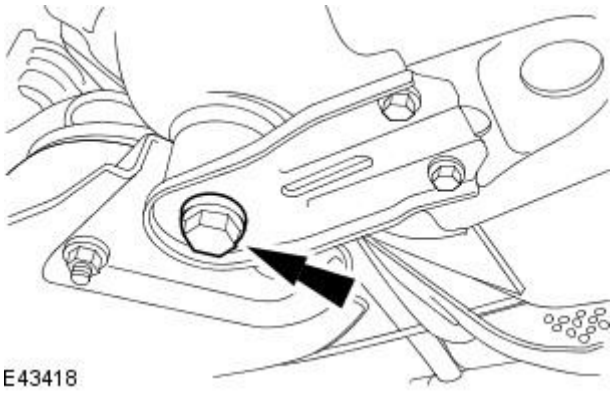

6. NOTE: Left-hand shown, right-hand similar.

Tighten to 142 Nm.

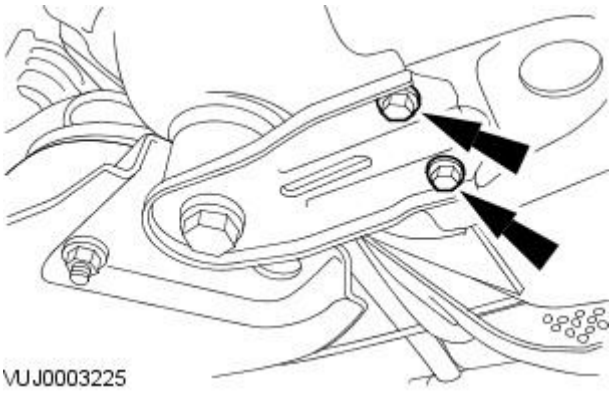

7. Tighten the front subframe reinforcement bolts.

- M8 to 35 Nm.
- M10 to 70 Nm.

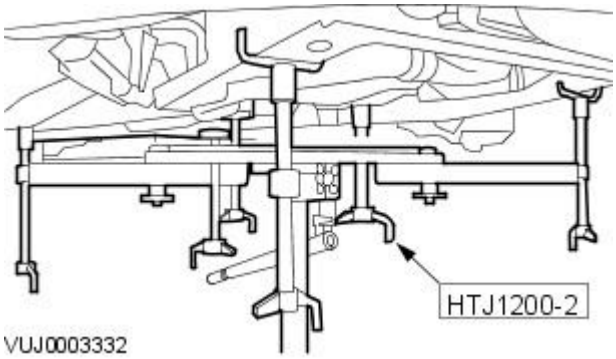

8. Remove the special tool.

Vehicles with diesel engine

9. Install the air deflector.
For additional information, refer to: Air Deflector - 2.0L Duratorq-TDCi/2.2L Duratorq-TDCi (110kW/150PS) - Puma (501-02 Front End Body Panels, Removal and Installation).

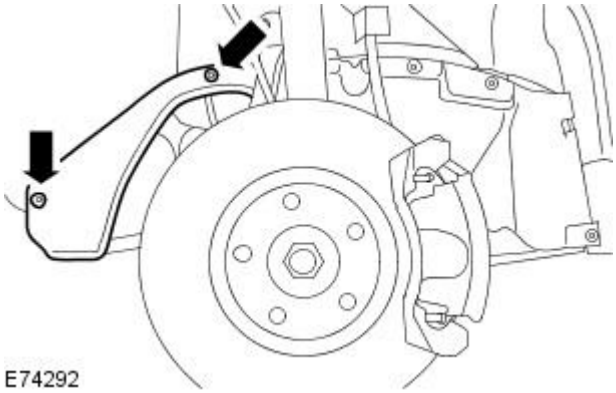

10. NOTE: Right-hand shown, left-hand similar.

Install the wheel arch liner access panel.

Vehicles with high intensity discharge headlamps

11. Attach the link rod to the headlamp leveling sensor.

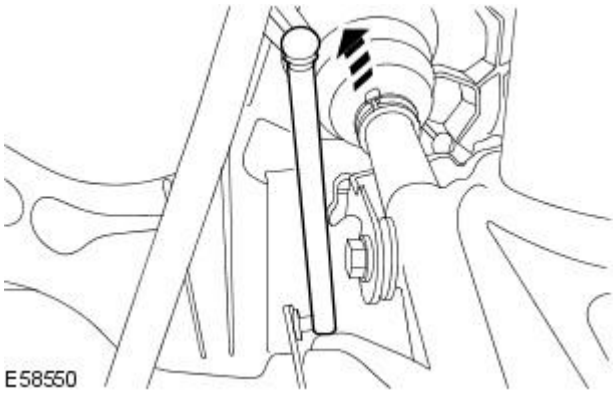

All vehicles

12. Install the front wheels and tires.
For additional information, refer to: Wheel and Tire (204-04 Wheels and Tires, Removal and Installation).

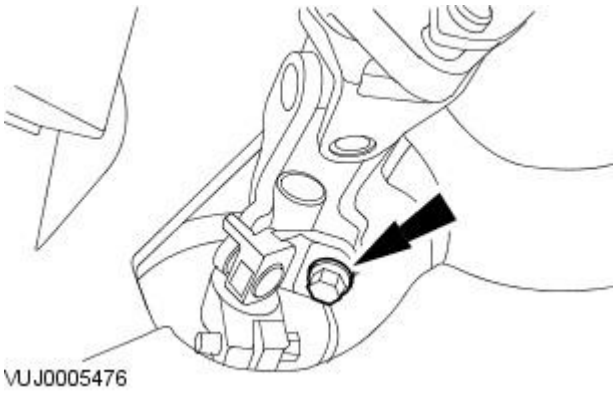

13. NOTE: Install a new retaining bolt.

Attach the steering column.

- Install a new steering column lower retaining bolt.
- Tighten to 25 Nm.

Published: 11-May-2011

Front Suspension - Front Wheel Bearing and Wheel Hub

Removal and Installation

Special Tool(s)	
204-310	Front hub carrier support 204-310
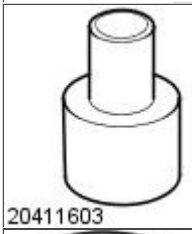 20411603	Hub flange remover 204-116-03
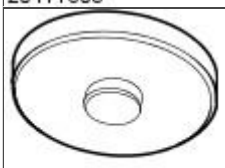 204-262	Bearing remover 204-262
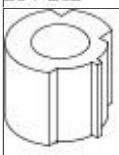 204-309	Hub carrier support 204-309
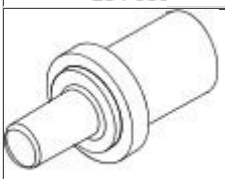 204-313	Bearing support 204-313
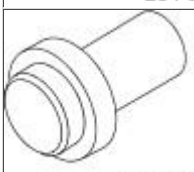 204-312	Bearing guide 204-312
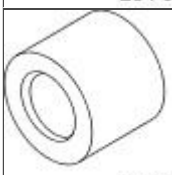 204-311	Bearing installer 204-311
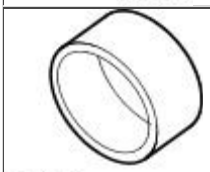 501-063	Bearing receiver 501-063

Removal

1. Remove wheel knuckle. For additional information refer to, Wheel Knuckle.

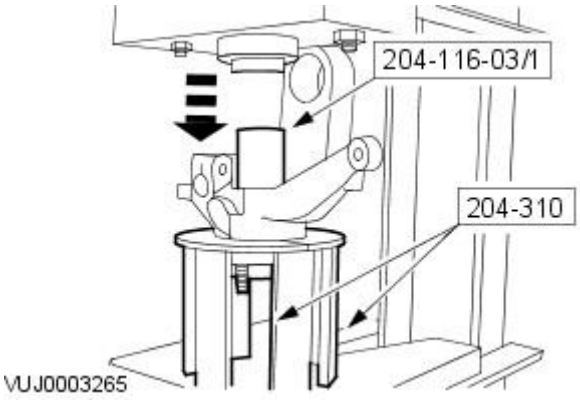

2. NOTE: When removing the wheel hub from the wheel knuckle the bearing will be destroyed and the bearing inner ring will remain on the wheel hub.

Using special tools, remove the wheel hub.

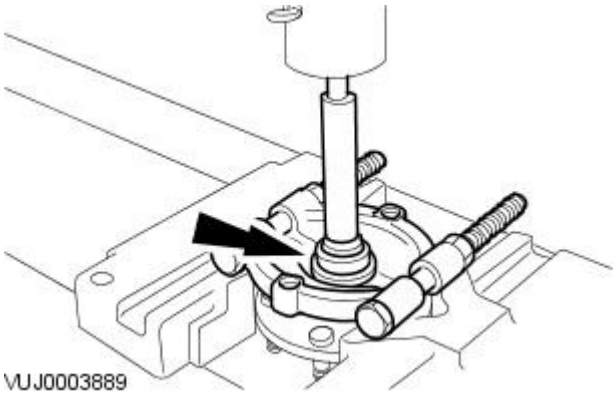

3. Using a suitable tool, remove the bearing inner ring.

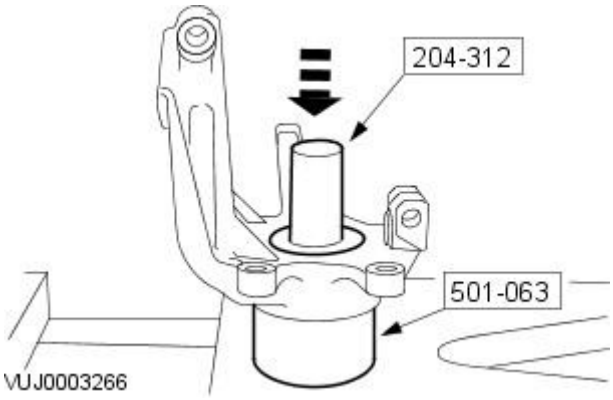

4. Using special tools, remove the wheel bearing.

Installation

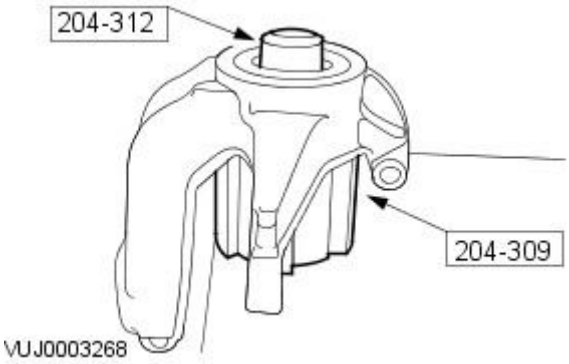

1. NOTE: Insert special tool 204-312 in to 204-309.

Support the wheel knuckle on special tools.

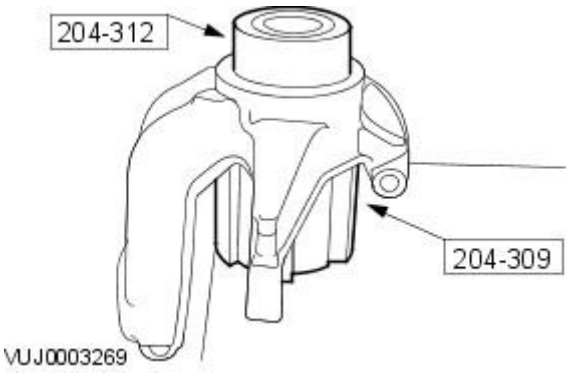

2. CAUTION: Make sure wheel bearing is correctly orientated with the colored side facing inboard.

Align the bearing over special tool.

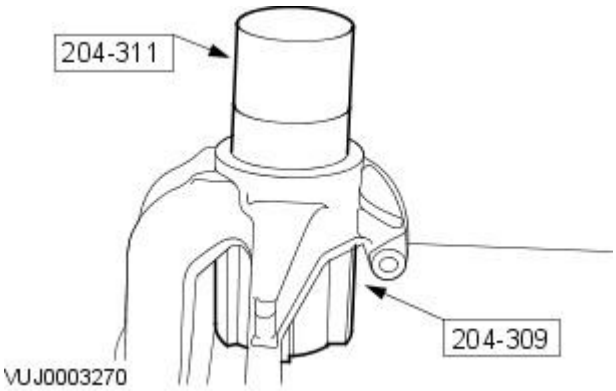

3. Using special tools, press bearing into wheel knuckle.

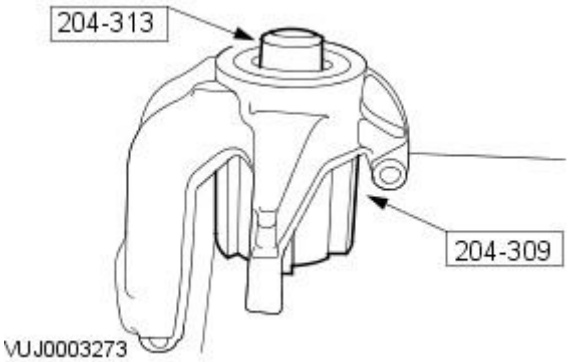

4. NOTE: Change special tool 204-312 to 204-313.

Align the bearing and wheel knuckle over special tool.

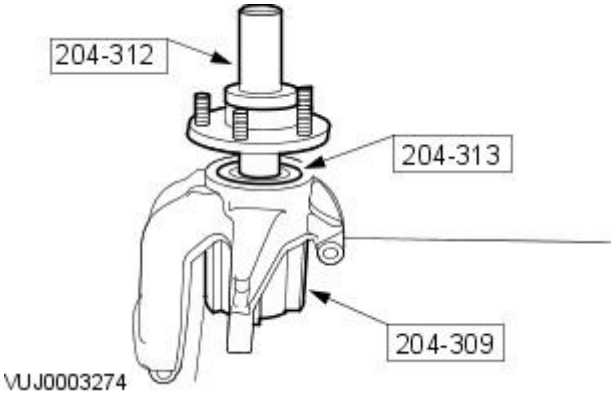

5. Slide wheel hub over the guide and align to the bearing.

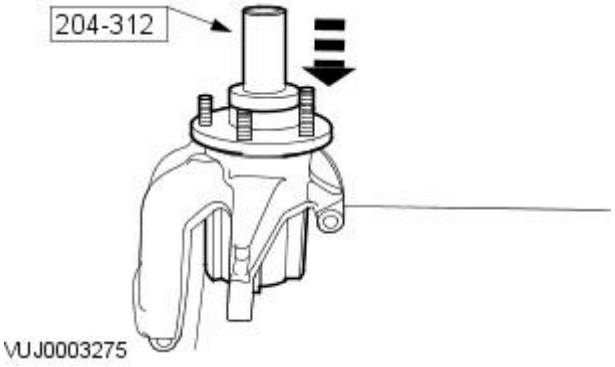

6. Using special tools install the wheel hub.

7. Install the wheel knuckle. For additional information, refer to Wheel Knuckle.

Front Suspension - Wheel Knuckle

Removal and Installation

Special Tool(s)	
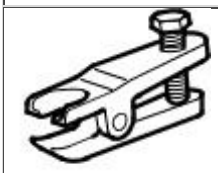 204-192	Ball joint splitter 204-192
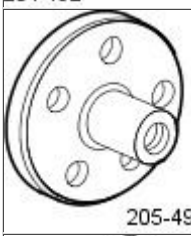 205-491	Wheel hub puller 205-491
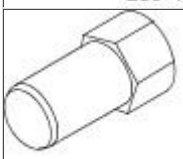 20549101	Adapter nuts 205-491-01
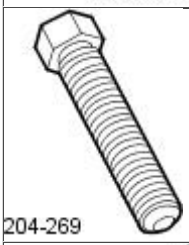 204-269	Forcing screw 204-269
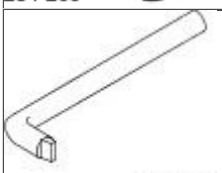 204-159	Knuckle splitter 204-159

Removal

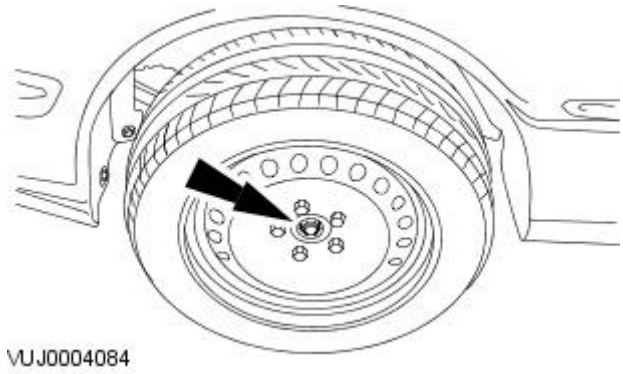
VUJ0004084

1. Loosen the wheel hub nut.

2. Remove the wheel and tire.
For additional information, refer to: Wheel and Tire (204-04 Wheels and Tires, Removal and Installation).

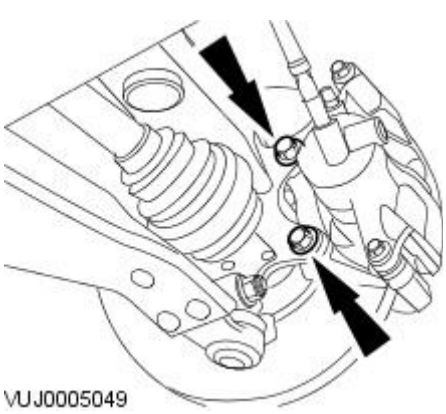
VUJ0005049

3. CAUTION: Secure the brake caliper anchor plate assembly to one side.

Remove the brake caliper and anchor plate assembly.

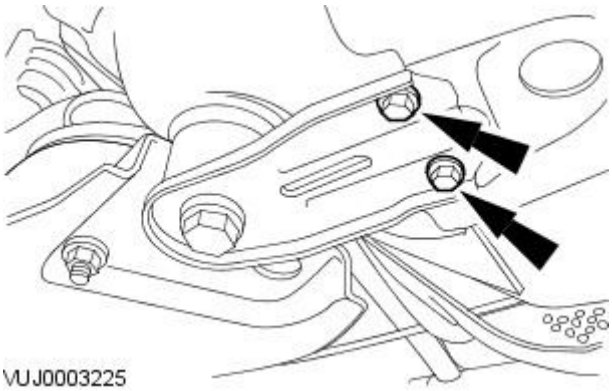

4. CAUTION: Only one side of the subframe needs to be lowered to detach the lower arm ball joint.

Remove the front subframe reinforcement plate retaining bolts.

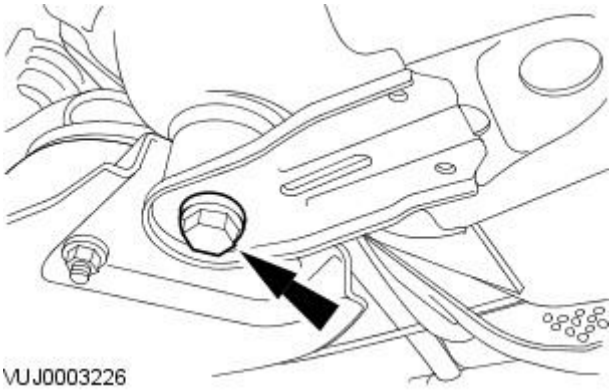

5. Loosen the front subframe rear mount retaining bolt.

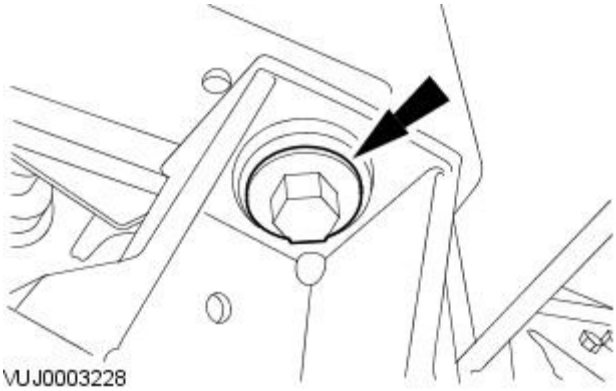

6. Loosen the front subframe front mount retaining bolt.

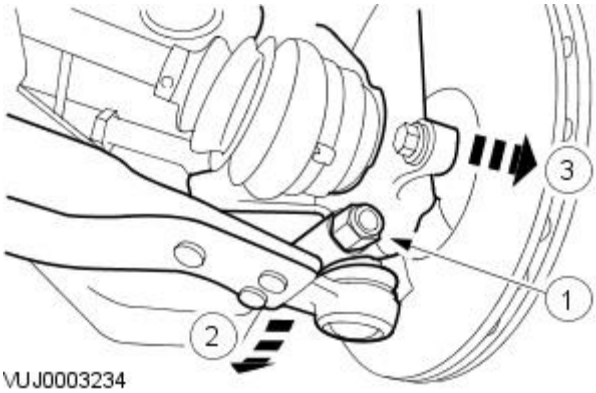

7. CAUTION: To prevent damage to the lower arm bushing, make sure the subframe is lowered before detaching the lower arm ball joint.

Detach the wheel knuckle.

1. Remove the lower arm ball joint retaining nut and bolt.
2. Reposition the lower arm.
3. Detach the wheel knuckle.

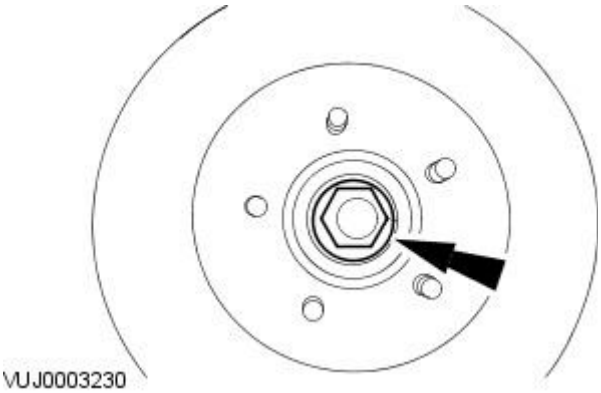

8. Remove and discard the wheel hub nut.

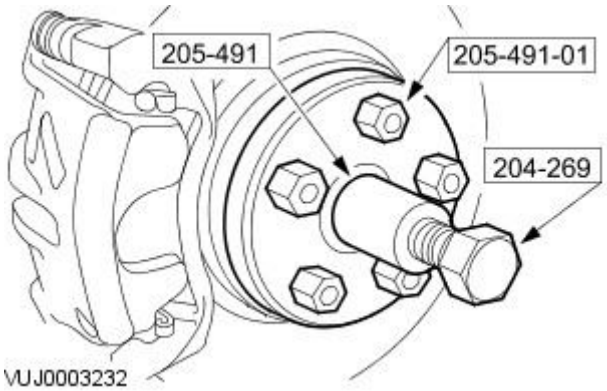

9. Using the special tools, detach the halfshaft.

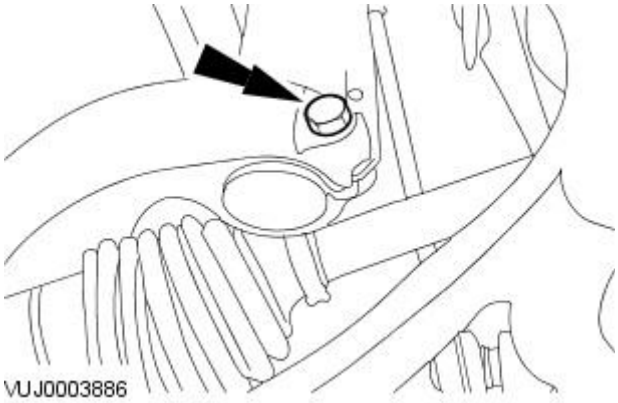

10. Remove the wheel knuckle pinch bolt.

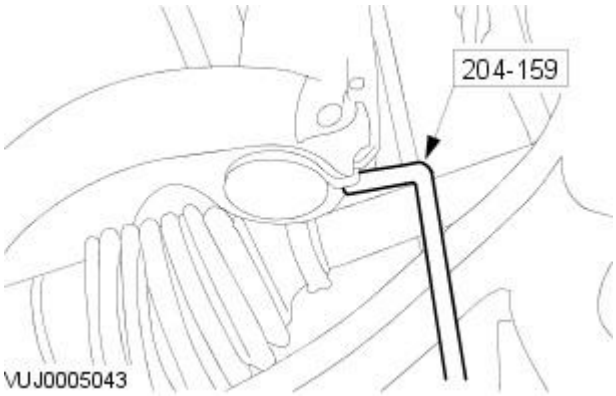

11. Remove the wheel knuckle.

1. Using the special tool, spread the wheel knuckle.
2. Remove the wheel knuckle.

Installation

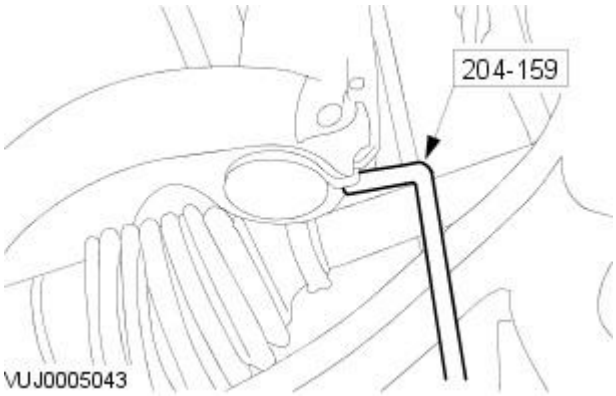

1. Attach the wheel knuckle to the strut and spring assembly.

1. Using the special tool, spread the wheel knuckle.
2. Attach the wheel knuckle.

- Tighten to 85 Nm.

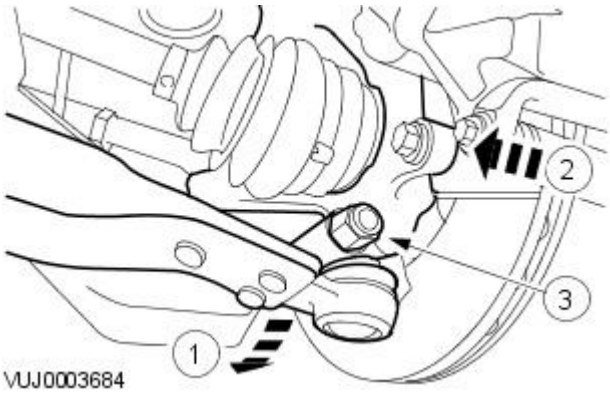

2. Attach the wheel knuckle.

1. Reposition the lower arm.
2. Attach the wheel knuckle.
3. Attach the lower arm ball joint retaining nut and bolt.
4. Tighten to 83 Nm.

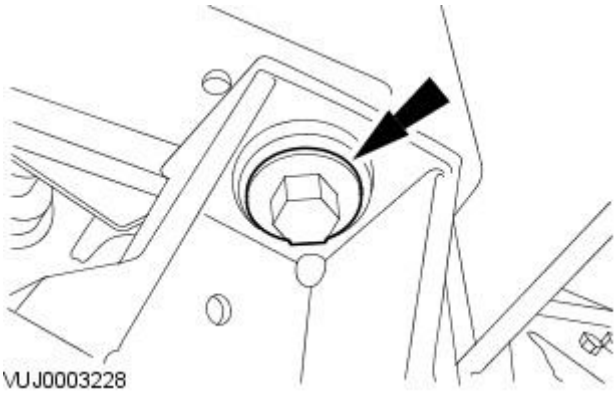

3. Tighten the front subframe front mount retaining bolt.

- Tighten to 142 Nm.

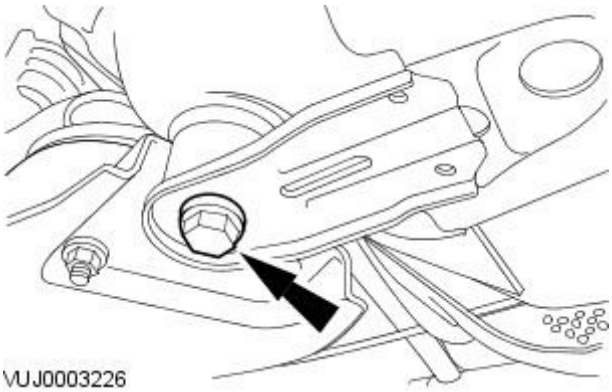

4. Loosely install the subframe rear mount retaining bolt.

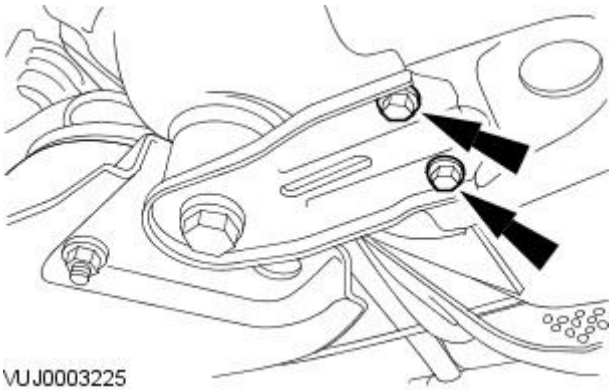

5. Tighten the front subframe reinforcement plate retaining bolts.

- Tighten to 35 Nm.

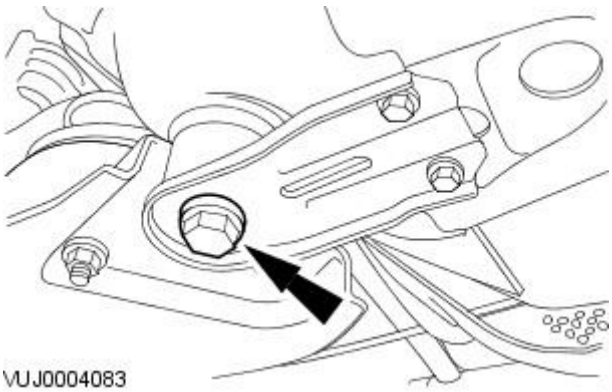

6. Tighten to 142 Nm.

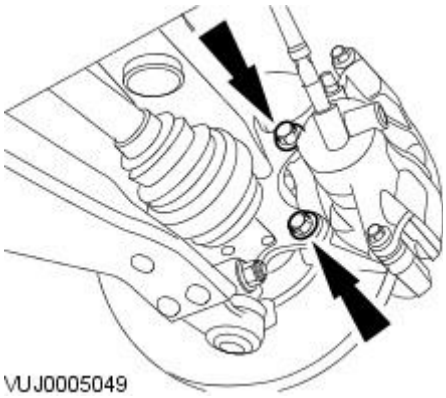

7. Attach the brake caliper and anchor plate assembly.

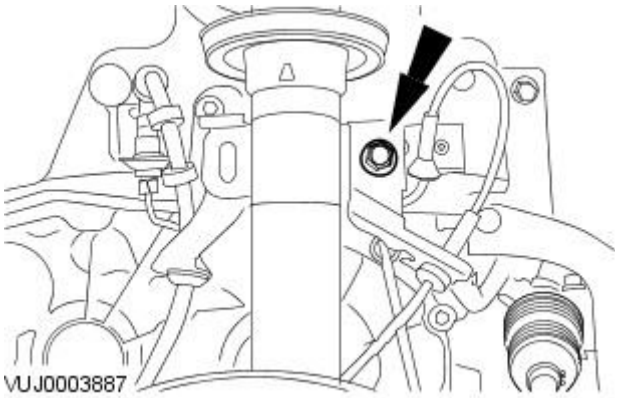

8. Attach the stabilizer bar connecting link.

- Tighten to 48 Nm.

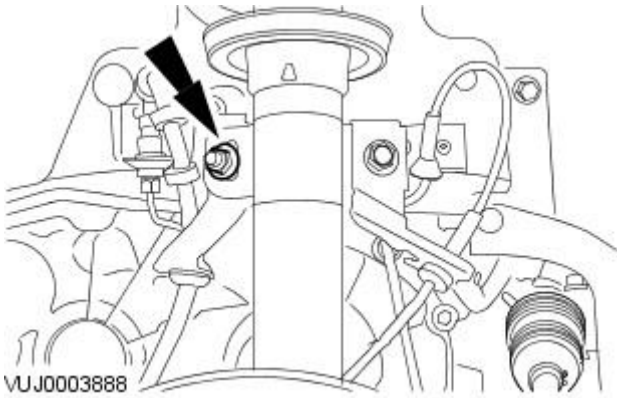

9. Attach the brake hose retaining bracket.

- Tighten to 48 Nm.

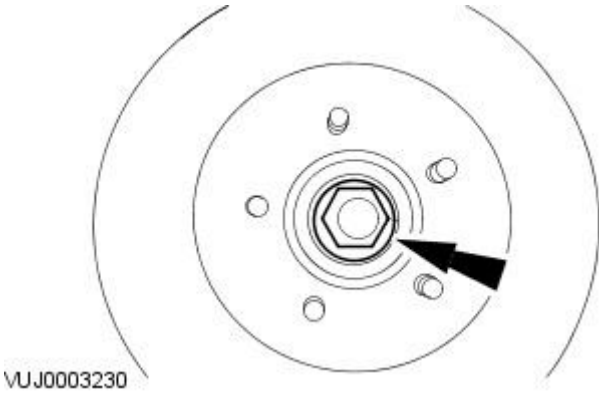

10. Install the new wheel hub nut.

11. Install the wheel and tire.
For additional information, refer to: Wheel and Tire (204-04 Wheels and Tires, Removal and Installation).

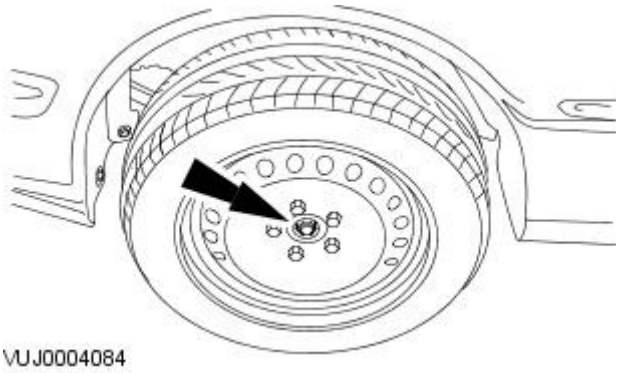

12. Tighten the wheel hub nut.

- Tighten to 270 Nm.

13. Carry out front subframe alignment procedure.
For additional information, refer to: Underbody Misalignment Check (502-00 Uni-Body, Subframe and Mounting System, General Procedures).

Front Suspension - Shock Absorber and Spring Assembly

Disassembly and Assembly

Special Tool(s)	
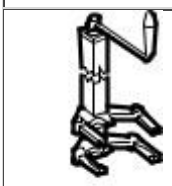 204-112	Spring coil compressor 204-112
204-167-01 E66191	Spring adapters 204-167-01
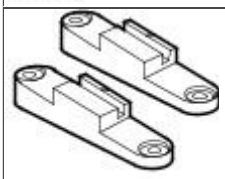 20411203	Spring adapters 204-112-03

Disassembly

1. Remove the shock absorber and spring assembly.
For additional information, refer to: Shock Absorber and Spring Assembly (204-01 Front Suspension, Removal and Installation).

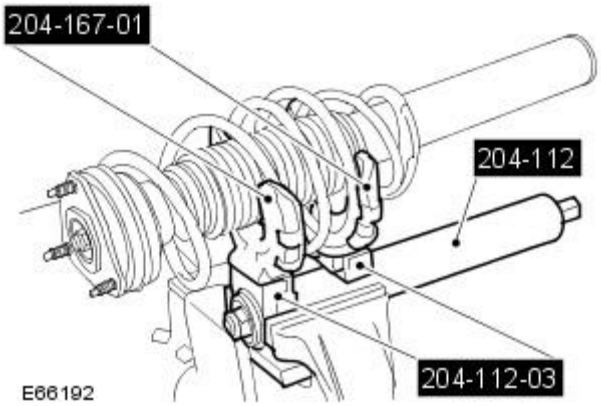

2. WARNING: AS THE SPRING IS UNDER EXTREME TENSION CARE MUST BE TAKEN AT ALL TIMES. FAILURE TO FOLLOW THESE INSTRUCTIONS MAY RESULT IN PERSONAL INJURY.

Using the special tools, compress the spring.

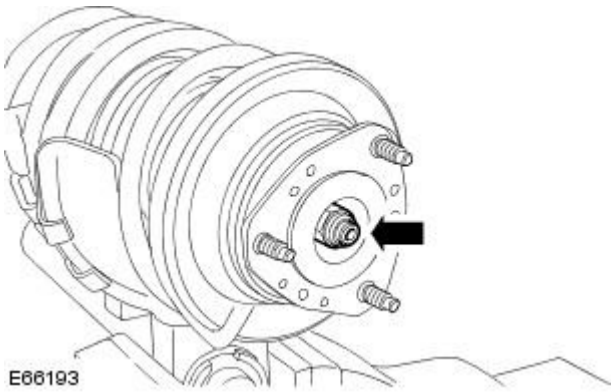

3. Loosen the thrust bearing retaining nut.

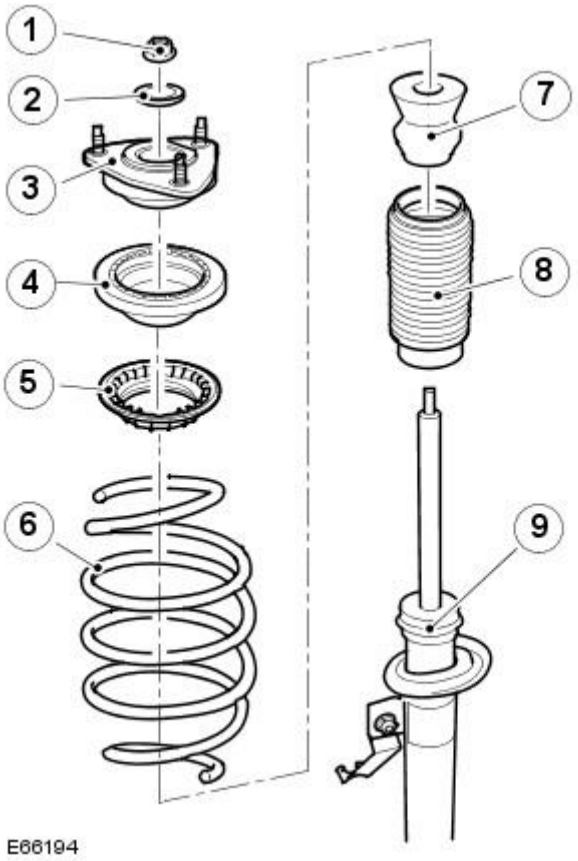

4. Disassemble the shock absorber and spring assembly.

1. Remove the thrust bearing nut.
2. Remove the spacer.
3. Remove the top mount.
4. Remove the thrust bearing.
5. Remove the spring seat.
6. Remove the spring.
7. Remove the bump stop.
8. Remove the gaiter.
9. Remove the shock absorber.

Assembly

CAUTION: Make sure the spring locates correctly against the spring seats

1. To assemble, reverse the disassembly procedure.

- Tighten to 47 Nm.

Rear Suspension -

Torque Specifications

Description	Nm	lb-ft	lb-in
Front lower arm to wheel knuckle retaining bolt	124	91	-
Front lower arm to subframe retaining bolt	124	91	-
Rear lower arm to wheel knuckle retaining bolt	124	91	-
Rear lower arm to subframe retaining bolt	124	91	-
Upper arm to wheel knuckle retaining bolt	124	91	-
Upper arm to subframe retaining bolt	124	91	-
Wheel knuckle to mounting bracket retaining nut*	115	85	-
Wheel knuckle mounting bracket to body retaining bolts	126	93	-
Wheel hub to wheel knuckle retaining bolts	63	46	-
Rear halfshaft to wheel hub retaining nut	270	200	-
Damper to wheel knuckle retaining bolt**	103	76	-
Damper to body retaining bolts	25	18	-
Stabilizer bar to subframe retaining bolts***	20	15	-
Stabilizer bar link arm to rear lower arm retaining nut	35	26	-

*If you are re-using this fixing on a vehicle built prior to VIN J29473, then tighten to 130 Nm. If you are replacing a fixing on any vehicle, then you must replace both nut and bolt and tighten to 115 Nm.

**If you are re-using this fixing on a vehicle built prior to VIN J24254, then tighten to 130 Nm. If you are replacing a fixing on any vehicle, then you must replace both nut and bolt and tighten to 103 Nm.

***If you are re-using this fixing on a vehicle built prior to VIN J24259, then tighten to 25 Nm. If you are replacing a fixing on any vehicle, then you must replace both nut and bolt and tighten to 20 Nm.

Rear Suspension - Rear Suspension

Description and Operation

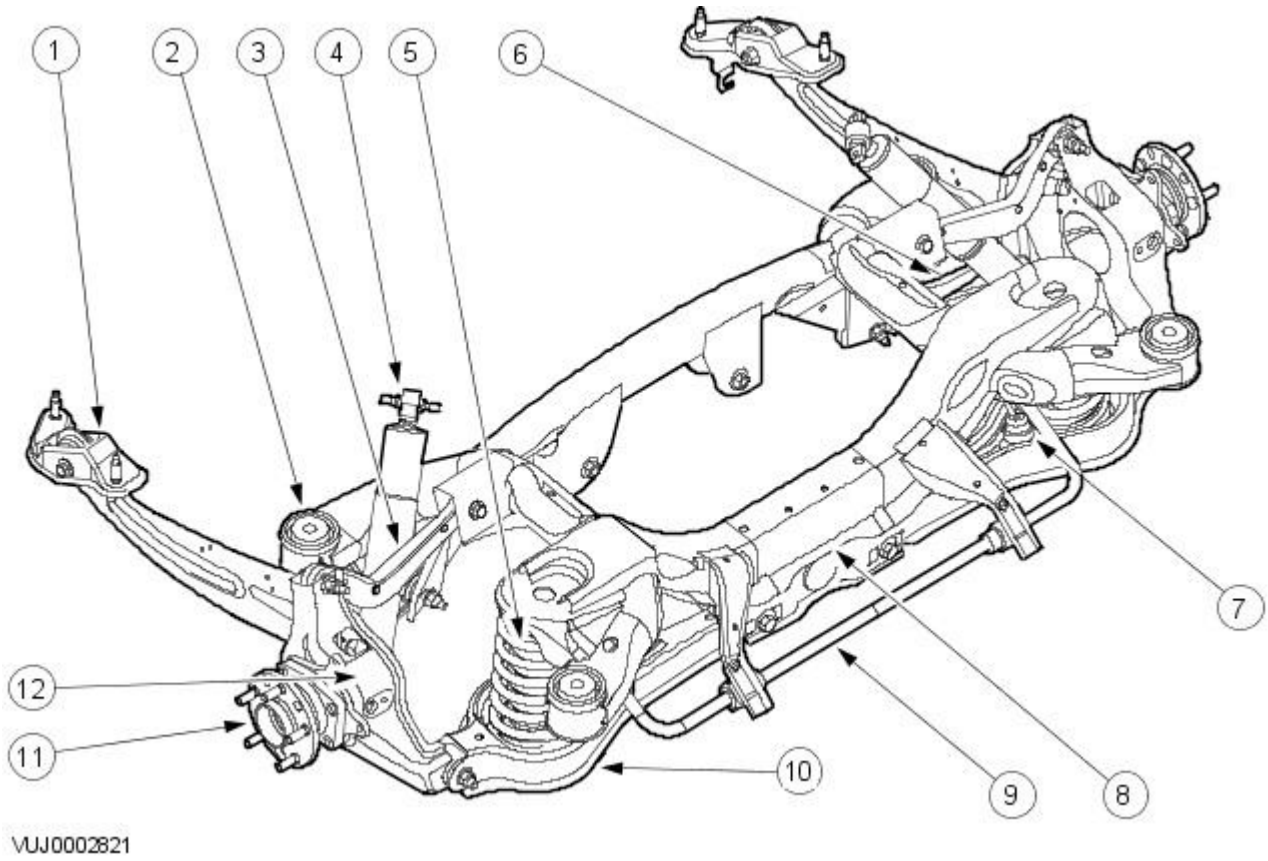

Item	Part Number	Description
1	—	Wheel knuckle mounting bracket
2	—	Subframe mount bushing
3	—	Upper arm
4	—	Shock absorber
5	—	Spring
6	—	Front lower arm
7	—	Stabilizer bar link
8	—	Subframe
9	—	Stabilizer bar
10	—	Rear lower arm
11	—	Wheel hub
12	—	Wheel knuckle

The independent rear suspension features an upper arm and front and rear lower arms which attach to the wheel knuckle. The rear lower arm carries the spring and is used to adjust the rear wheel alignment.

Components

The wheel knuckle:

- carries the wheel hub.
- carries the brake caliper assembly.
- carries the Anti-lock brake (ABS) sensor.

The wheel hub:

- carries the brake disc.
- is not a servicable item.

The stabilizer bar link:

- is of a steel construction with a link at each end.
- transmits vertical movements of the rear suspension to the stabilizer bar.

The stabilizer bar:

- is mounted on the subframe.
- is connected to the left-hand and right-hand rear lower arms by the stabilizer bar links.
- is fitted to all models with or without sports suspension.

The upper arm:

- is a one piece steel forging and incorporates rubber bushes with steel inserts at both ends.
- is the upper support for the wheel knuckle.

The front lower arm:

- is of a tubular steel design and incorporates a rubber bush with a steel insert at one end.
- is the front lower support for the wheel knuckle.

The rear lower arm:

- is of a steel design and has cam bolts at the subframe mounting points to adjust wheel alignment.
- is the rear lower support for the wheel knuckle.
- carries the road spring.
- is used to adjust the rear wheel alignment

Bushings:

- are a moulded construction with aluminium inserts.
- are incorporated within the subframe to isolate noise and vibrations.

Published: 11-May-2011

Rear Suspension - Rear Suspension

Diagnosis and Testing

For additional information, refer toSection 204-00 Suspension System - General Information.

Rear Suspension - Damper

Removal and Installation

Removal

1. Raise and support the vehicle.
   For additional information, refer to: Lifting (100-02 Jacking and Lifting, Description and Operation).
2. Detach the damper.

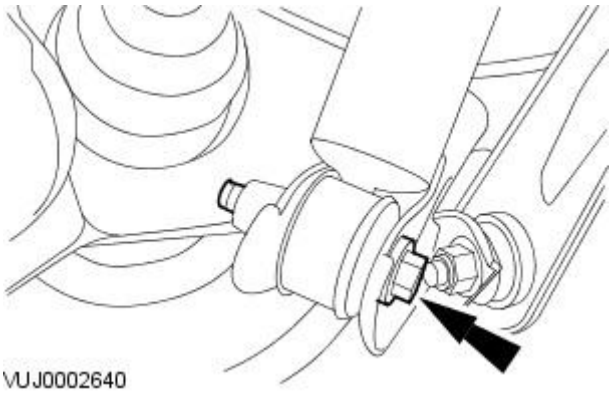

3. Remove the damper.

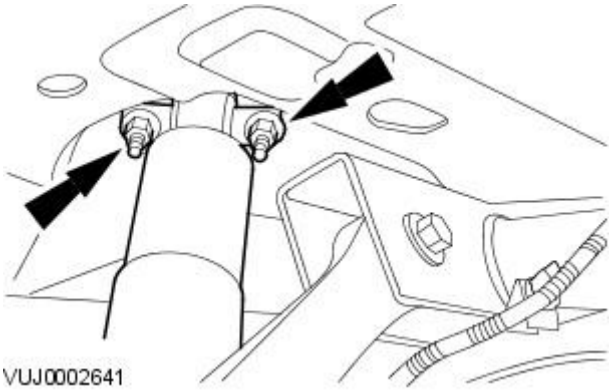

Installation

• NOTE: The final tightening of the rear suspension components must be carried out with the vehicle on its wheels.

1. Install the damper.

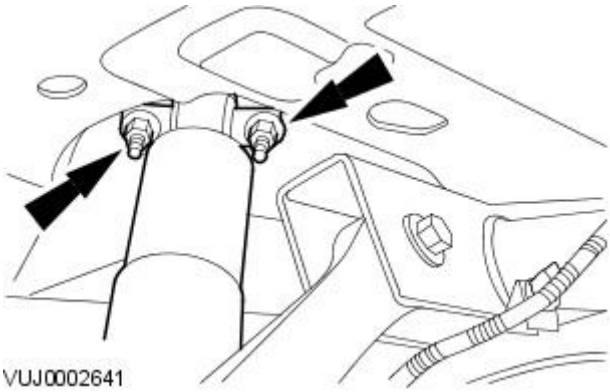

2. Attach the damper.

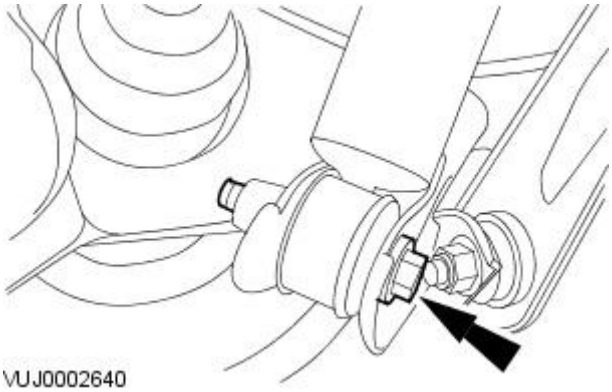

• NOTE: Carry out final tightening of the rear suspension components.

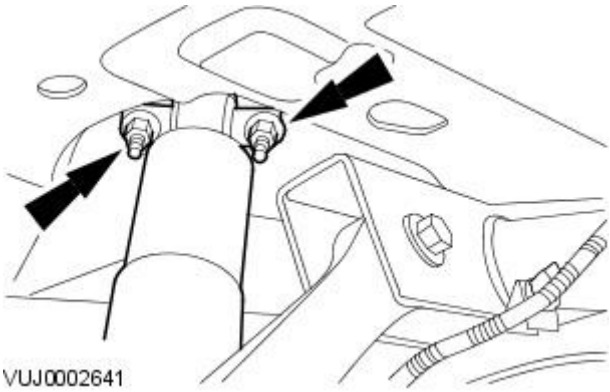

3. Tighten to 25 Nm.

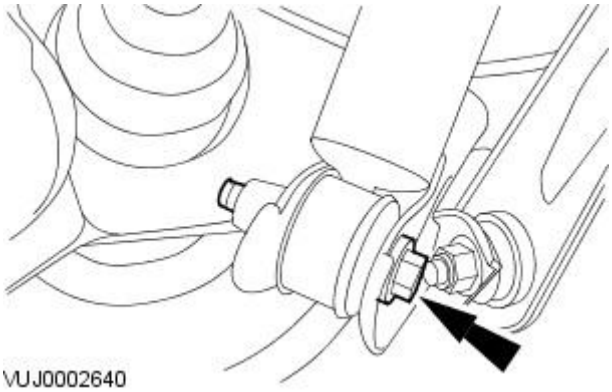

4. Tighten to 130 Nm.

Rear Suspension - Front Lower Arm4-Door

Removal and Installation

Removal

1. Raise and support the vehicle.
   For additional information, refer to: Lifting (100-02 Jacking and Lifting, Description and Operation).
2. Detach the front lower arm.

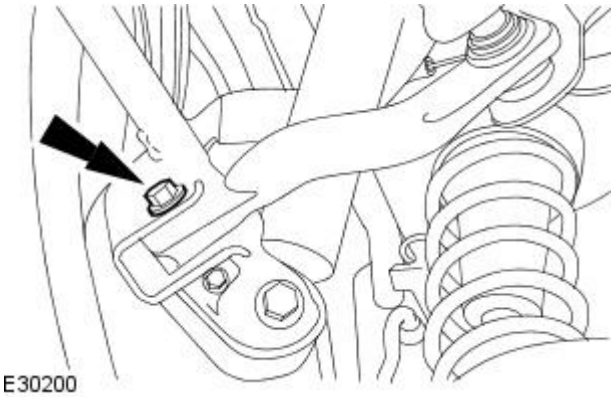

3. Remove the front lower arm.

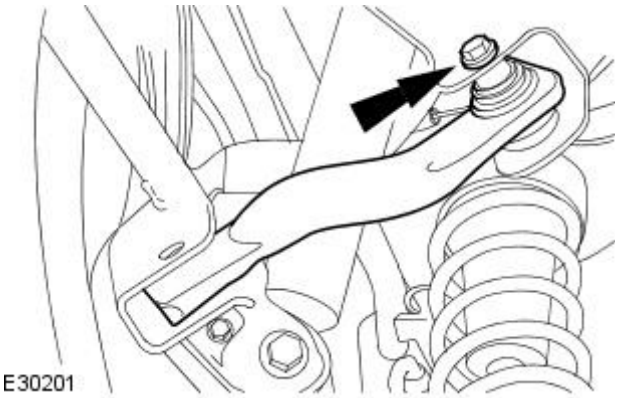

Installation

• NOTE: The final tightening of the rear suspension components must be carried out with the vehicle on its wheels.

1. Install the front lower arm.

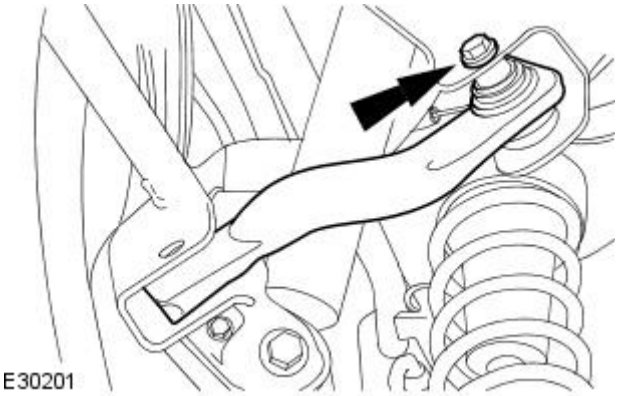

2. Attach the front lower arm.

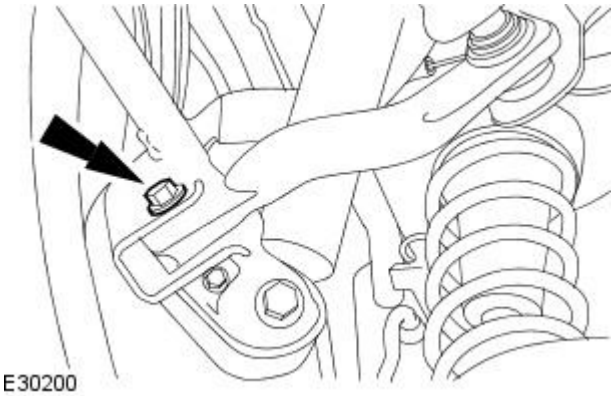

3. Lower the vehicle.

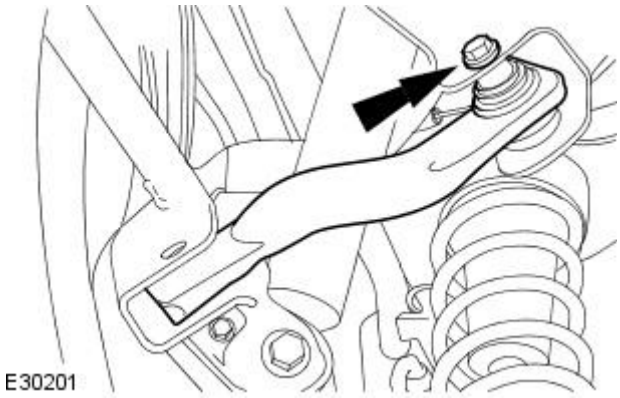

4. Tighten to 124 Nm.

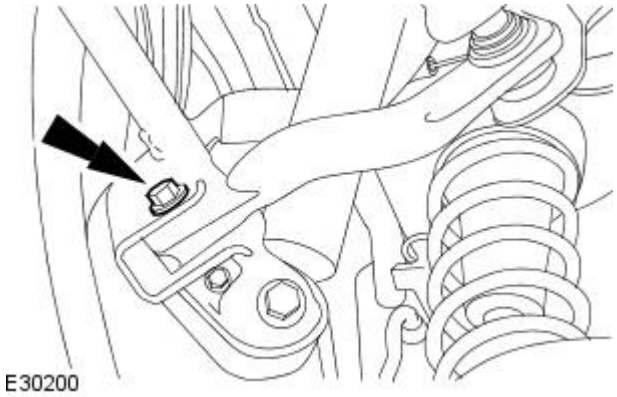

5. Tighten to 124 Nm.

Rear Suspension - Front Lower ArmWagon

Removal and Installation

Removal

All vehicles

1. Raise and support the vehicle.
   For additional information, refer to: Lifting (100-02 Jacking and Lifting, Description and Operation).

Vehicles with 2.0L engine

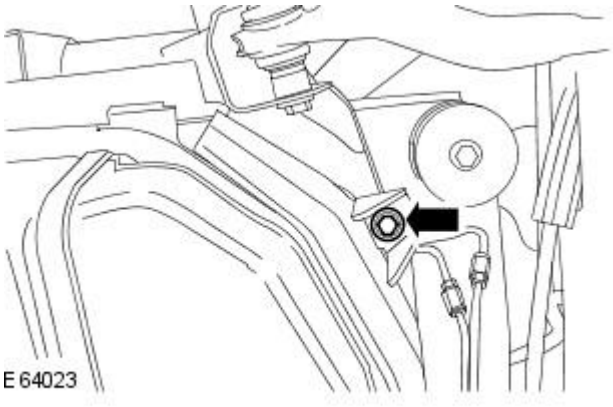

2. Remove the fuel tank protection bracket retaining bolt.

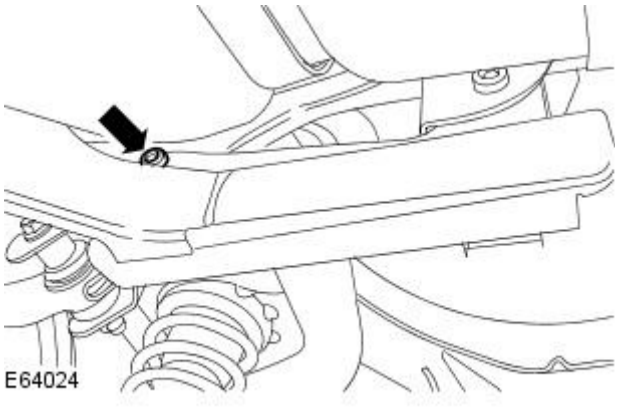

3. Remove the fuel tank protection bracket retaining bolt.

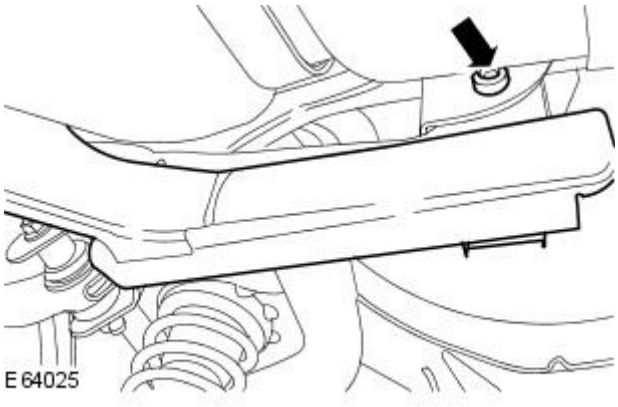

4. Reposition the fuel tank protection bracket.
   - Loosen the fuel tank protection bracket retaining bolt.

All vehicles

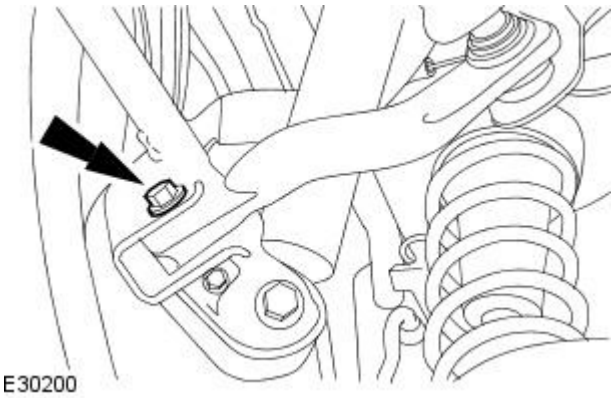

5. Detach the front lower arm.

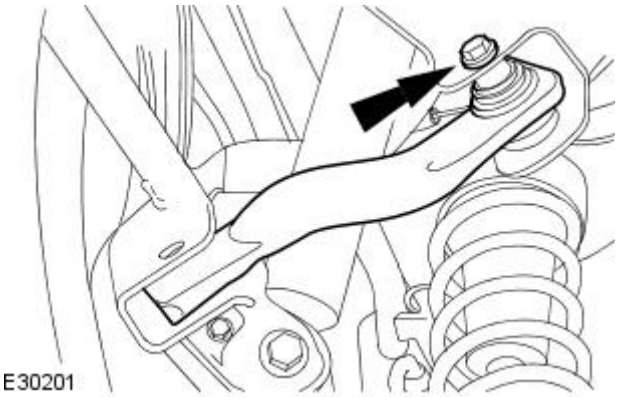

6. Remove the front lower arm.

Installation

All vehicles

• NOTE: The final tightening of the rear suspension components must be carried out with the vehicle on its wheels.

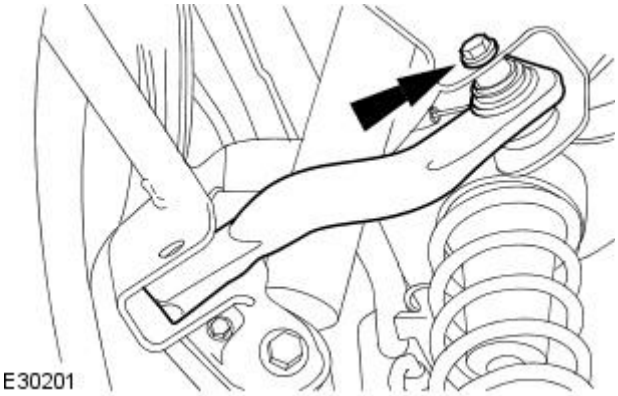

1. Install the front lower arm.

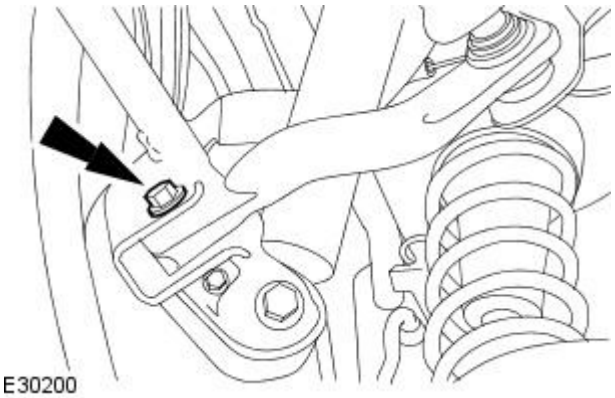

2. Attach the front lower arm.

Vehicles with 2.0L engine

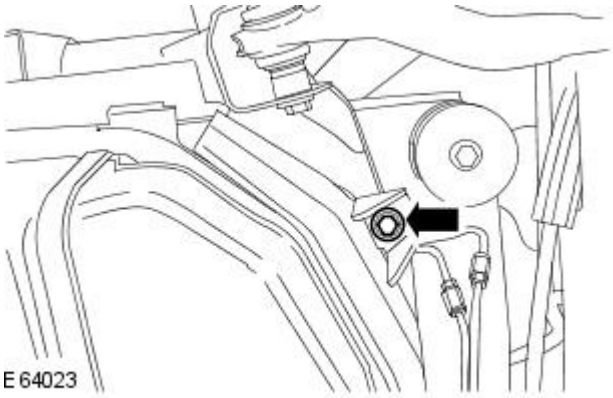

3. Loosely install the fuel tank protection bracket retaining bolt.

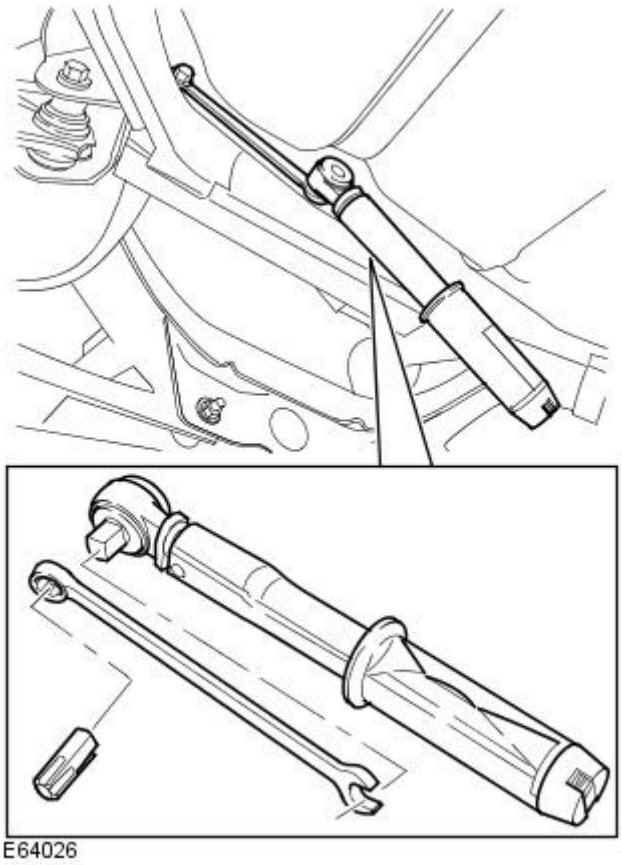

4. Using a suitable torx adaptor, 10 mm combination spanner and 3/8 drive torque wrench, install the fuel tank protection bracket retaining bolt.

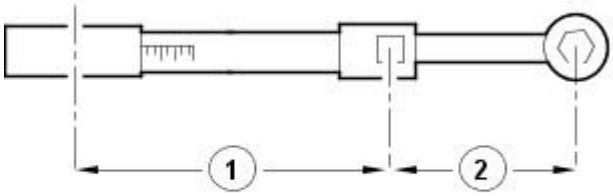

5. Using the torx adaptor, 10 mm combination spanner and 3/8 drive torque wrench, tighten the fuel tank protection bracket retaining bolt.

- To make sure the fuel tank protection bracket retaining bolt is torqued to the correct specification, the following calculation steps must be followed.
    1. Step 1. Multiply 25 Nm by the effective length of the torque wrench (1).
    2. Step 2. Add the effective length of the special tool (2) to the effective length of the torque wrench (1).
    3. Step 3. Divide the total of step 1 by the total of step 2.
    4. Step 4. Set the torque wrench to the figure arrived at in step 3.
- Tighten the fuel tank protection bracket retaining bolt to the torque given by the calculation.

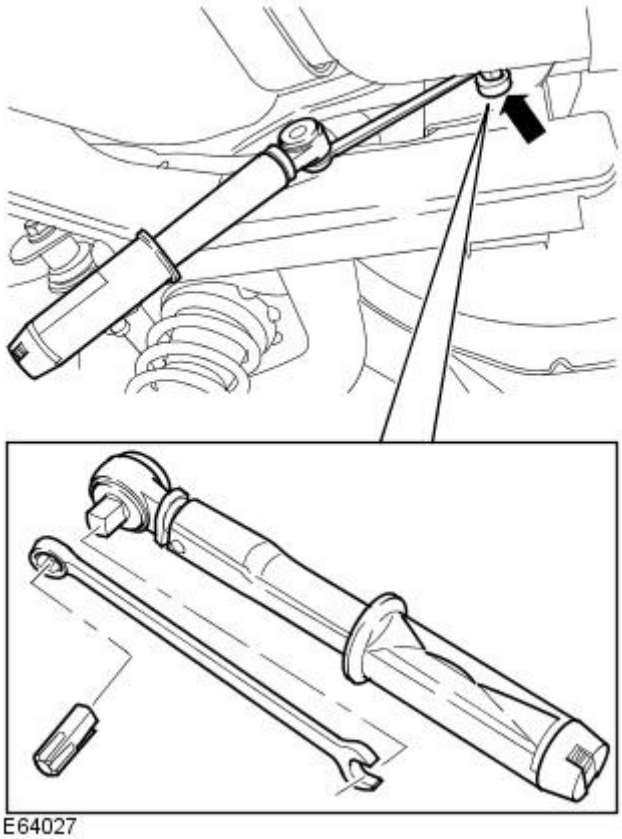

6. Using a suitable torx adaptor, 10 mm combination spanner and 3/8 drive torque wrench, install the fuel tank protection bracket retaining bolt.

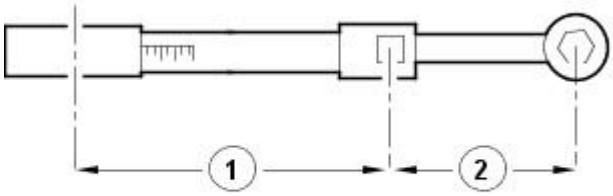

7. Using the torx adaptor, 10 mm combination spanner and 3/8 drive torque wrench, tighten the fuel tank protection bracket retaining bolt.
   - To make sure the fuel tank protection bracket retaining bolt is torqued to the correct specification, the following calculation steps must be followed.
     1. Step 1. Multiply 90 Nm by the effective length of the torque wrench (1).
     2. Step 2. Add the effective length of the special tool (2) to the effective length of the torque wrench (1).
     3. Step 3. Divide the total of step 1 by the total of step 2.
     4. Step 4. Set the torque wrench to the figure arrived at in step 3.
   - Tighten the fuel tank protection bracket retaining bolt to the torque given by the calculation.

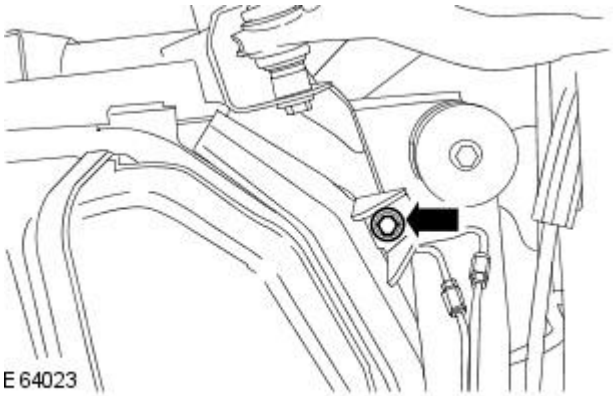

8. Tighten to 63 Nm.

All vehicles

9. Lower the vehicle.

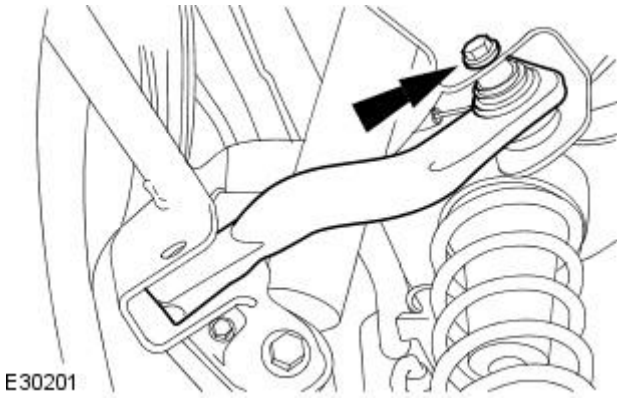

10. Tighten to 115 Nm.

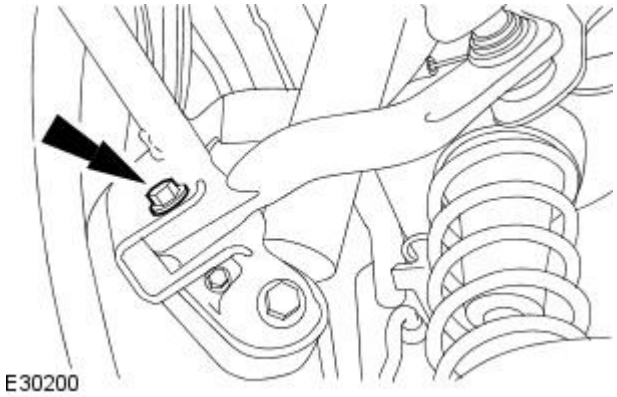

11. Tighten to 115 Nm.

Rear Suspension - Rear Lower Arm

Removal and Installation

Removal

1. Remove the rear wheel and tire.
   For additional information, refer to: Wheel and Tire (204-04 Wheels and Tires, Removal and Installation).
2. Using suitable tie straps, secure the spring to the subframe.

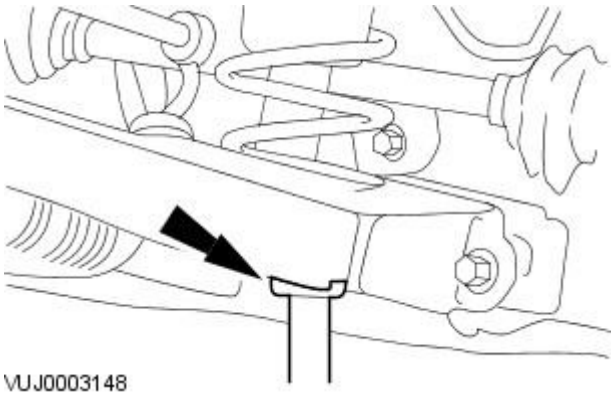

3. CAUTION: Make sure that excessive strain is not placed on the rear lower arm.

   Using a suitable transmission jack, support the rear lower arm.

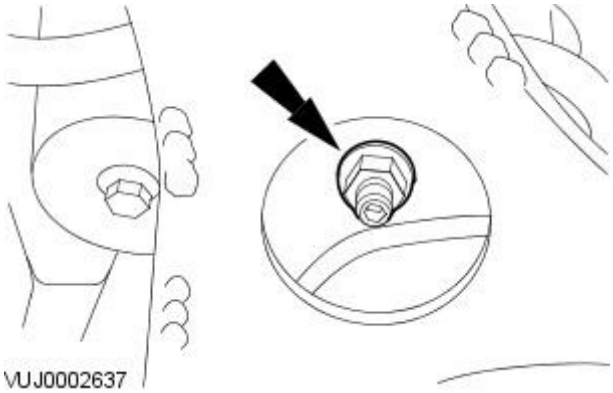

4. Detach the stabilizer bar link.

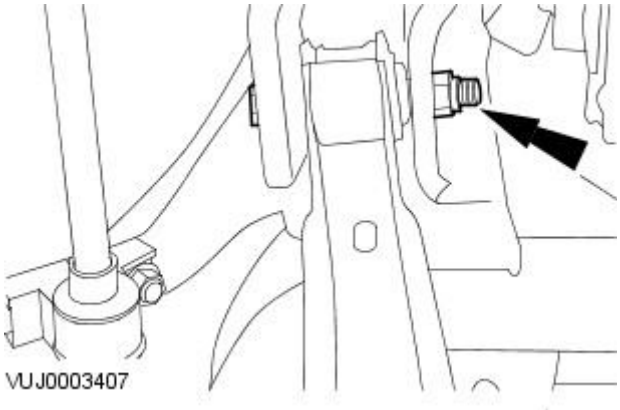

5. Detach the rear lower arm.

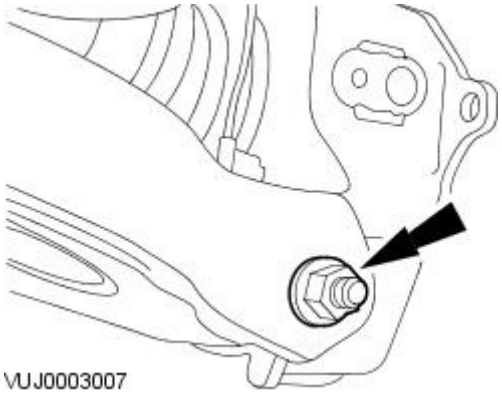

6. CAUTION: Carefully lower the transmission jack.

   Remove the rear lower arm.

Installation

- NOTE: The final tightening of the rear suspension components must be carried out with the vehicle on its wheels.

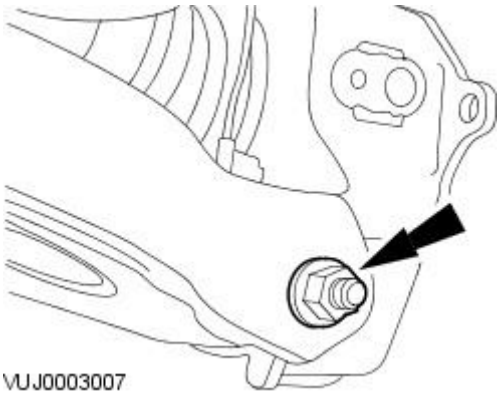

1. Install the rear lower arm.

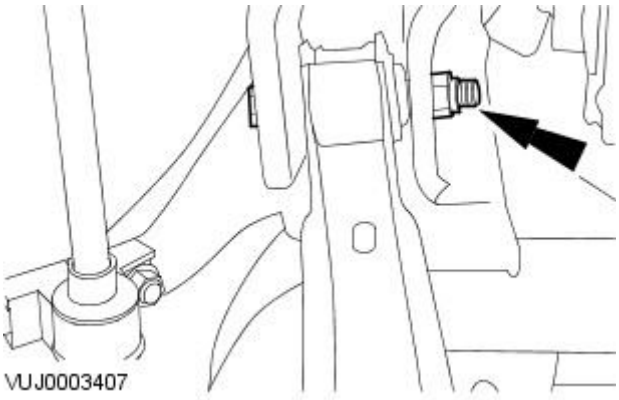

2. Attach the rear lower arm.

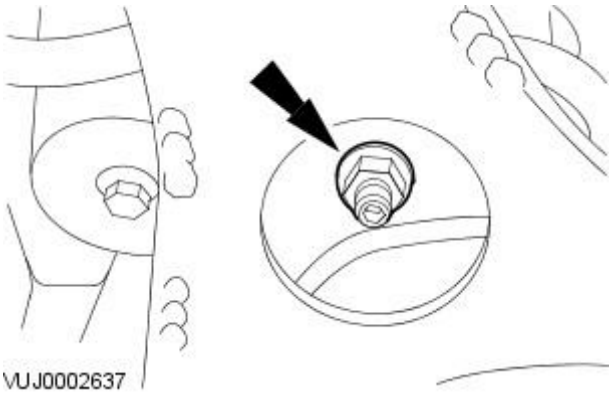

3. Attach the stabilizer bar link.

4. Install the rear wheel and tire.
For additional information, refer to: Wheel and Tire (204-04 Wheels and Tires, Removal and Installation).

5. Tighten to 124 Nm.

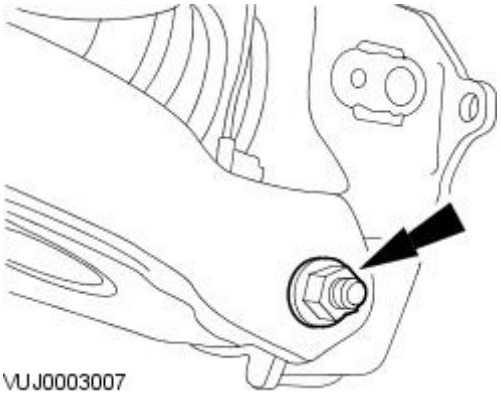

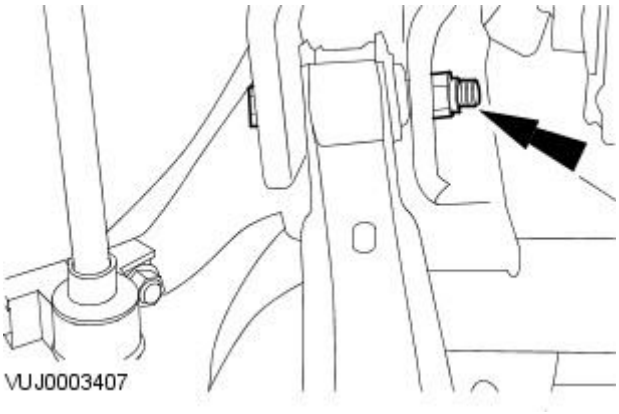

6. Tighten to 124 Nm.

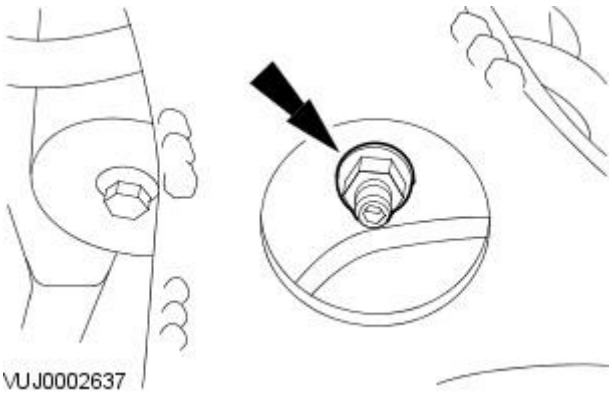

7. Tighten to 35 Nm.

8. Check the wheel alignment and adjust as necessary.
For additional information, refer to: Wheel Alignment Angles (204-00 Suspension System - General Information, Description and Operation).

Rear Suspension - Spring

Removal and Installation

Removal

1. Remove the rear wheel and tire.
   For additional information, refer to: Wheel and Tire (204-04 Wheels and Tires, Removal and Installation).
2. Using suitable tie straps, secure the spring to the subframe.

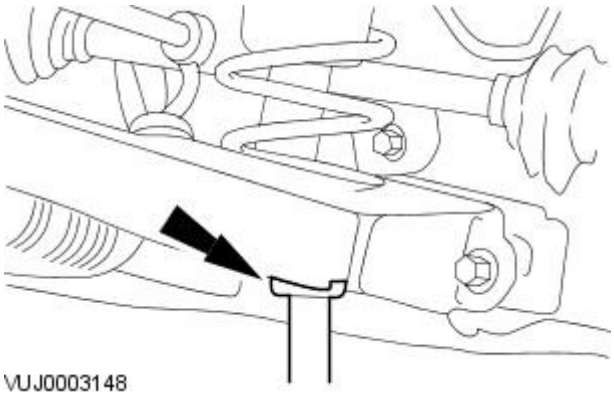

3. CAUTION: Make sure that excessive strain is not placed on the rear lower arm.

   Using a suitable transmission jack, support the rear lower arm.

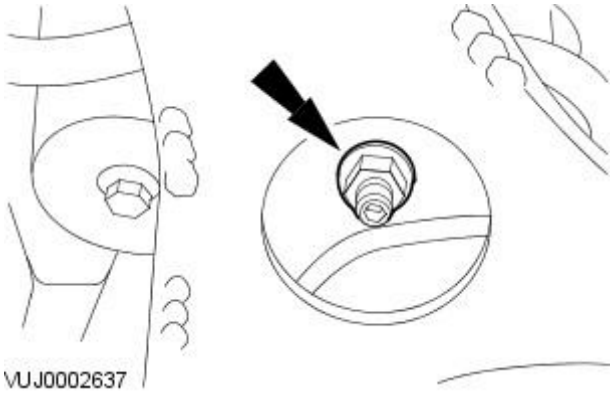

4. Detach the stabilizer bar link.

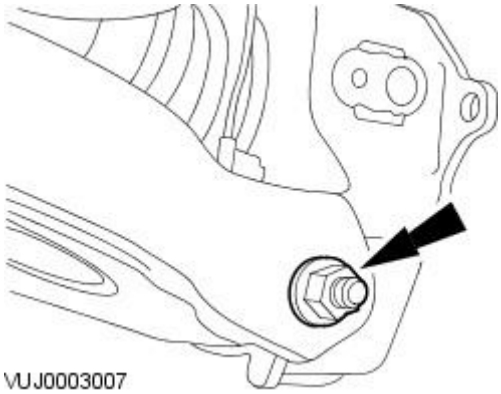

5. Detach the rear lower arm.

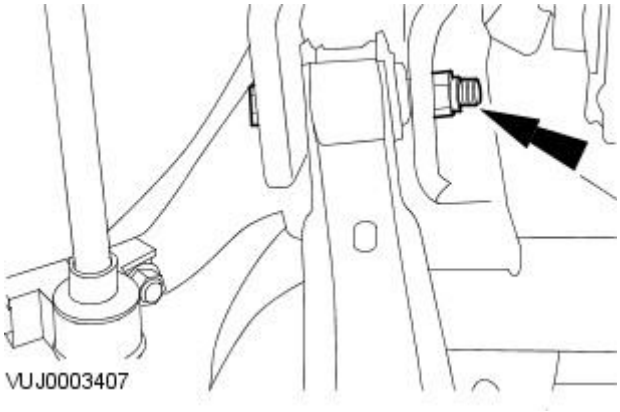

6. CAUTION: Carefully lower the transmission jack.

   Loosen the rear lower arm from the subframe.

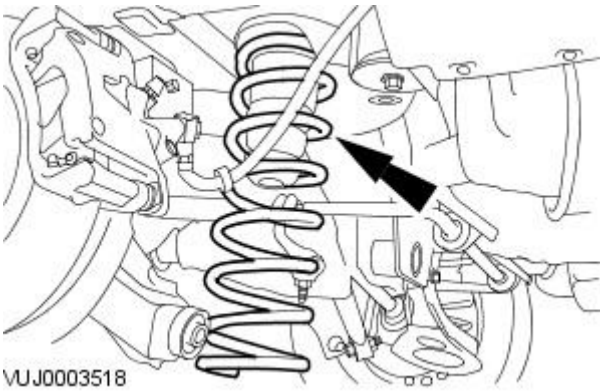

7. Remove the spring.

- Remove the isolator.

Installation

• NOTE: The final tightening of the rear suspension components must be carried out with the vehicle on its wheels.

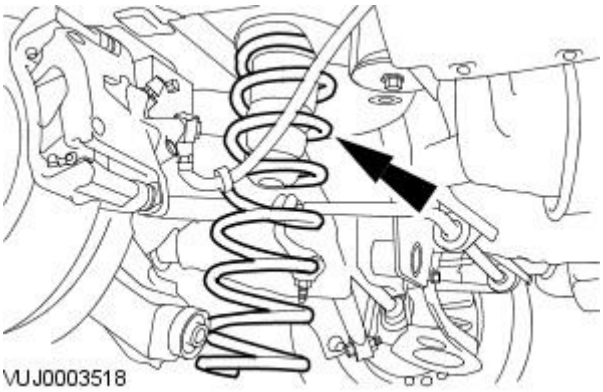

1. Install the spring.

- Install the isolator.

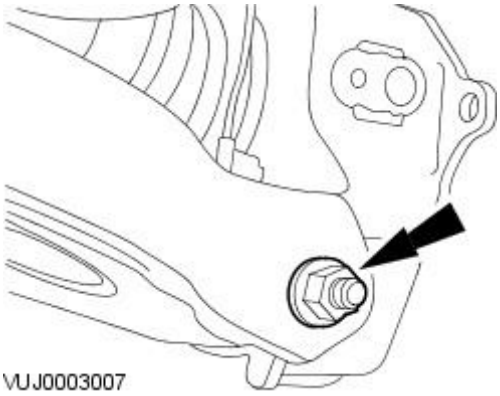

2. Attach the rear lower arm.

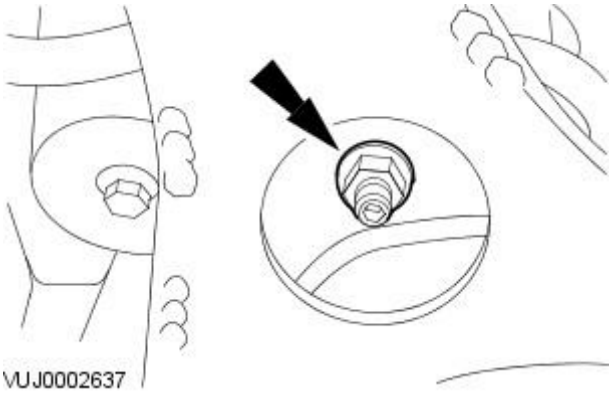

3. Attach the anti roll bar link.

4. Install the wheel rear wheel and tire.
For additional information, refer to: Wheel and Tire (204-04 Wheels and Tires, Removal and Installation).

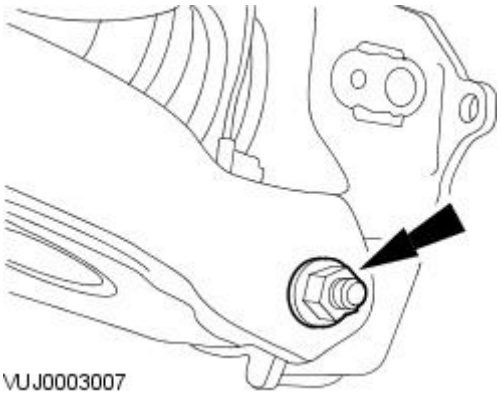

5. Tighten to 124 Nm.

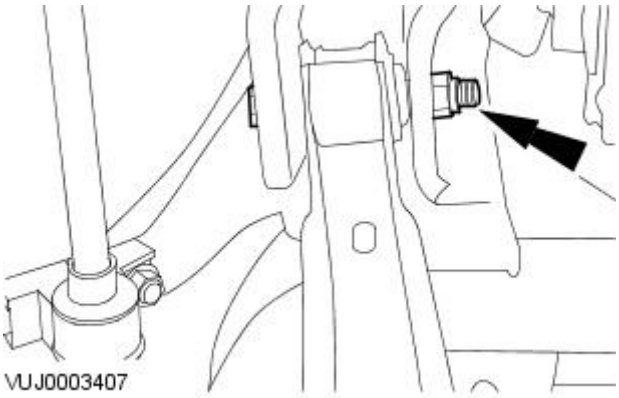

6. Tighten to 124 Nm.

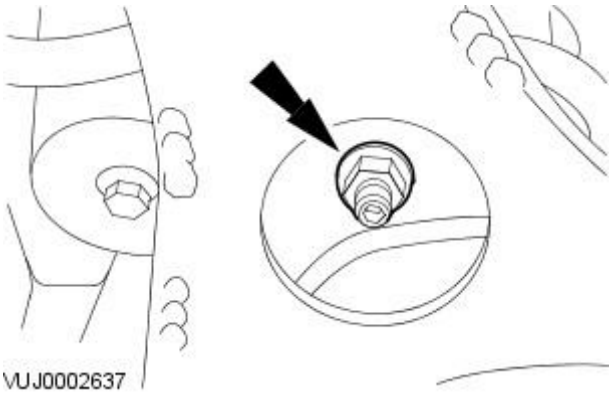

7. Tighten to 35 Nm.

8. Check the wheel alignment and adjust as necessary.
For additional information, refer to: Wheel Alignment Angles (204-00 Suspension System - General Information, Description and Operation).

Rear Suspension - Rear Stabilizer Bar

Removal and Installation

Removal

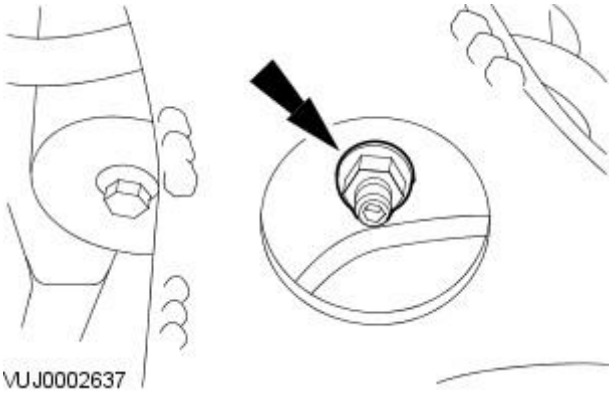

1. Raise and support the vehicle. For additional information, refer to Section 100-02 Jacking and Lifting.
2. Detach the stabilizer bar links.
   - Right-hand shown, left-hand similar.

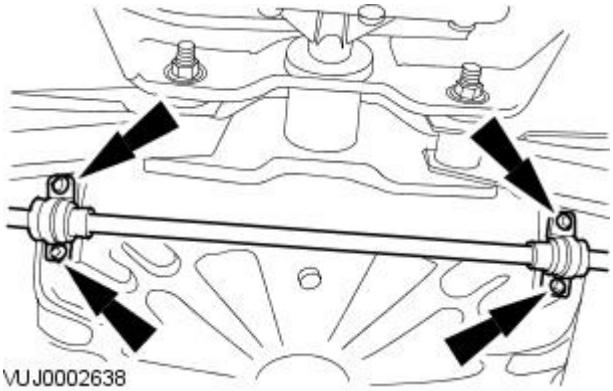

3. Remove the stabilizer bar.

Installation

• NOTE: The final tightening of the rear suspension components must be carried out with the vehicle on its wheels.

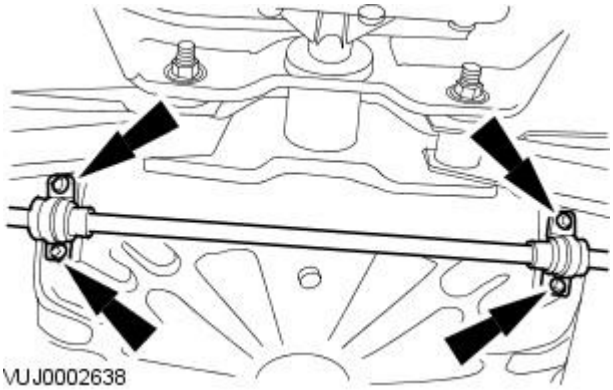

1. To install, reverse the removal procedure.
   - Tighten to 25 Nm.

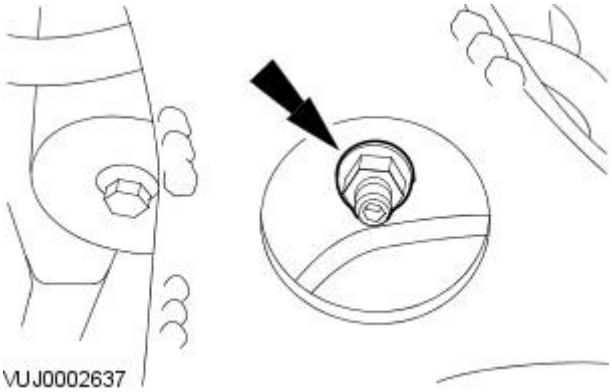

2. Tighten to 35 Nm.
   - Right-hand shown, left-hand similar.

Rear Suspension - Rear Stabilizer Bar Link

Removal and Installation

Removal

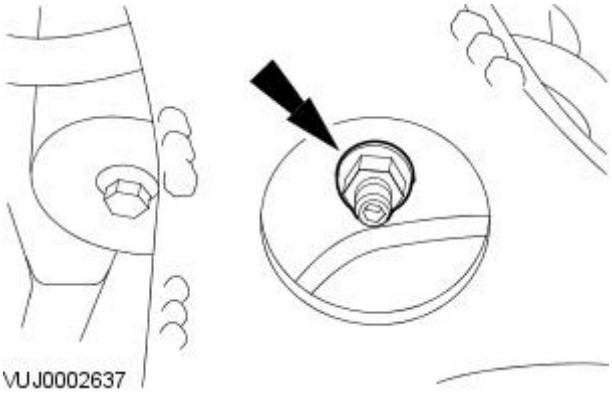

1. Raise and support the vehicle. For additional information, refer to Section 100-02 Jacking and Lifting.
2. Detach the stabilizer bar link.

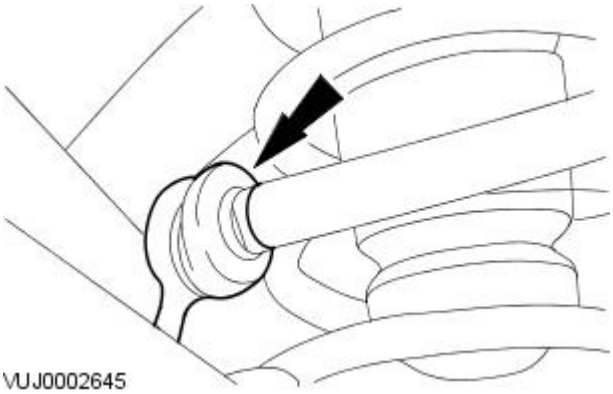

3. Remove the stabilizer bar link.

Installation

• NOTE: The final tightening of the rear suspension components must be carried out with the vehicle on its wheels.

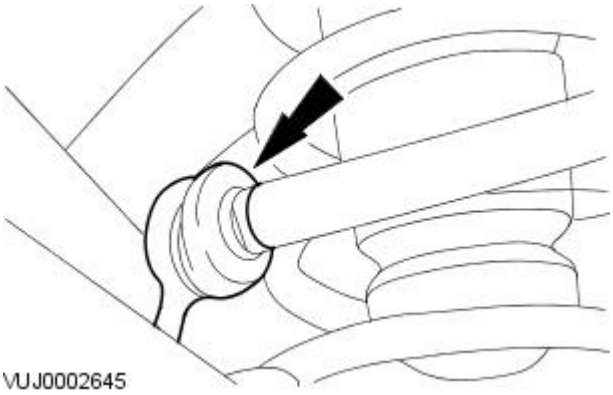

1. CAUTION: Make sure rubber boot does not twist while tightening.

   Tighten to 50 Nm.

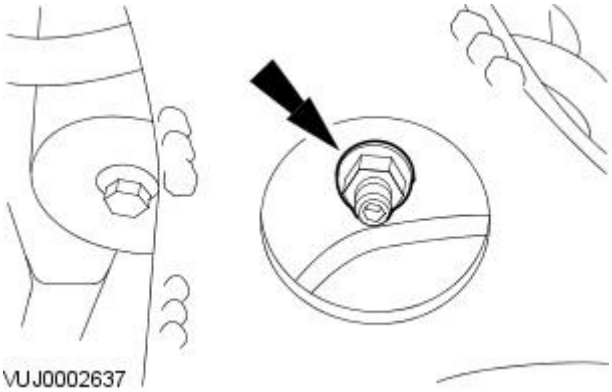

2. To install, reverse the removal procedure.
   - Tighten to 35 Nm.

Rear Suspension - Upper Arm

Removal and Installation

Removal

1. Remove the rear wheel and tire.
   For additional information, refer to: Wheel and Tire (204-04 Wheels and Tires, Removal and Installation).
2. Detach the upper arm.

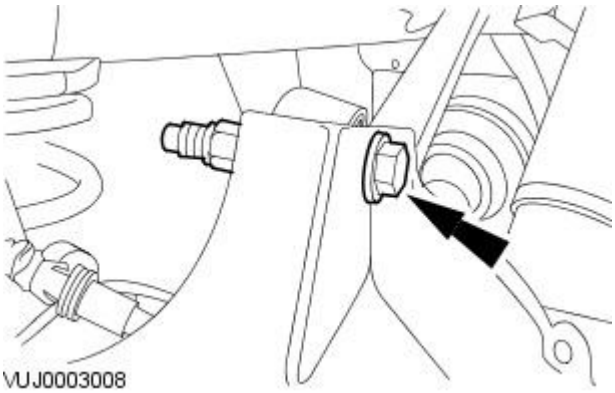

3. Remove the upper arm.

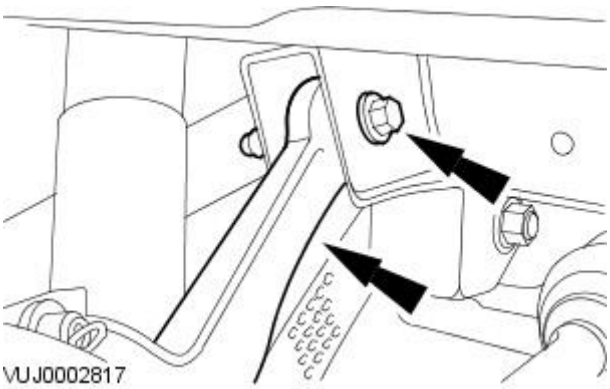

Installation

• NOTE: The final tightening of the rear suspension components must be carried out with the vehicle on its wheels.

1. Install the upper arm.

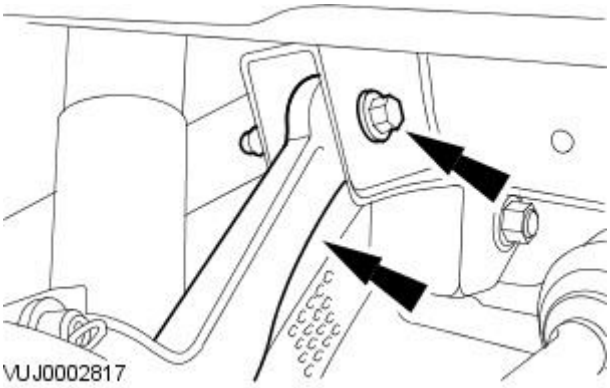

2. Attach the upper arm.

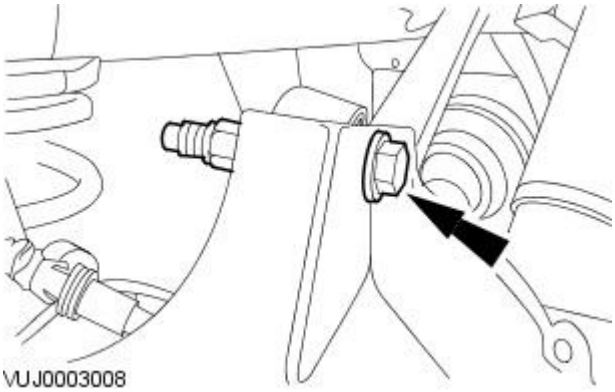

3. Install the wheel and tire assembly.
   For additional information, refer to: Wheel and Tire (204-04 Wheels and Tires, Removal and Installation).

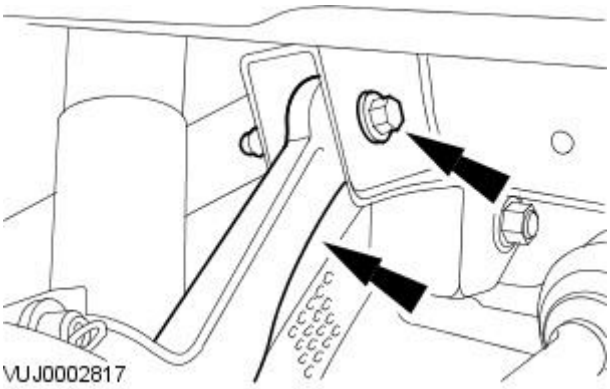

4. Tighten to 124 Nm.

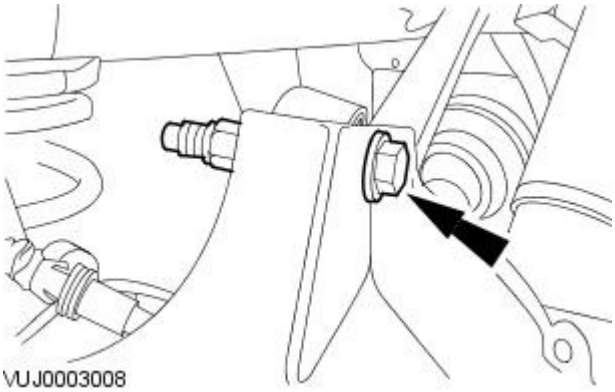

5. Tighten to 124 Nm.

6. Check the wheel alignment and adjust as necessary.
For additional information, refer to: Wheel Alignment Angles (204-00 Suspension System - General Information, Description and Operation).

Rear Suspension - Wheel Hub

Removal and Installation

Special Tool(s)	
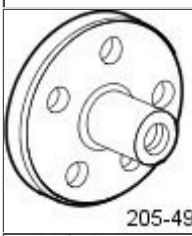 205-491	Puller, Wheel hub remover 205-491
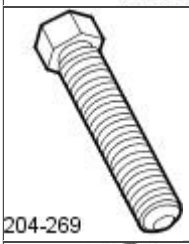 204-269	Forcing Screw, Wheel hub remover 204-269
20549101	Adaptor Nuts, Wheel hub remover 205-491-01

Removal

All vehicles

1. Remove the rear brake disc.
   For additional information, refer to: Brake Disc (206-04 Rear Disc Brake, Removal and Installation).

Vehicles with 2.5L or 3.0L engine

2. Remove and discard the rear halfshaft retaining nut.

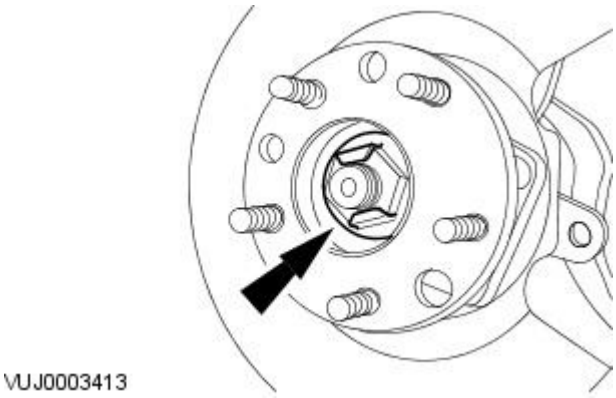

VUJ0003413

3. Remove the wheel hub retaining bolts.

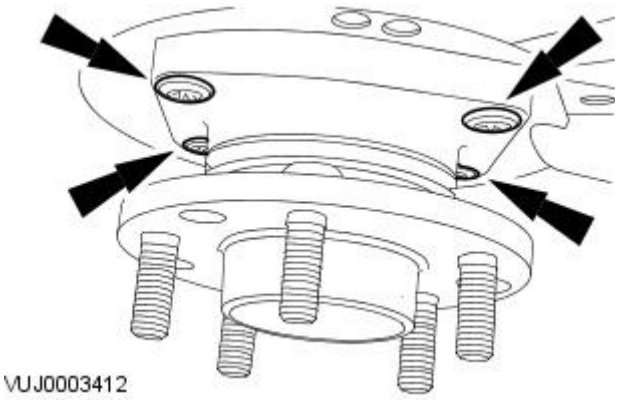

VUJ0003412

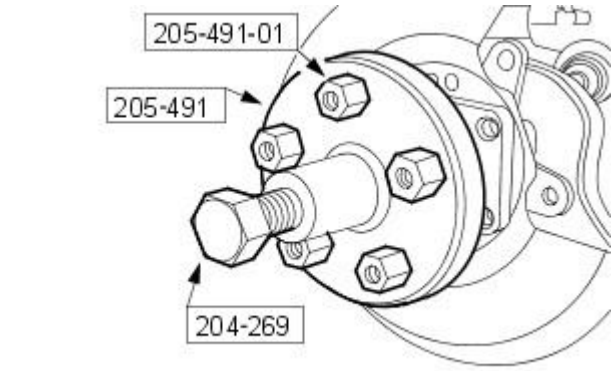

VUJ0003411

4. Using the special tools, remove the wheel hub.

Vehicles with 2.0L engine

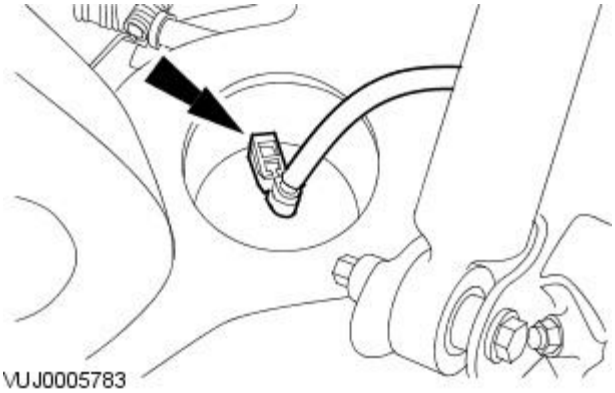
VUJ0005783

5. CAUTION: Failure to follow this procedure may result in damage to the anti-lock brake system (ABS) components.

Disconnect the anti-lock brake system (ABS) sensor electrical connector.

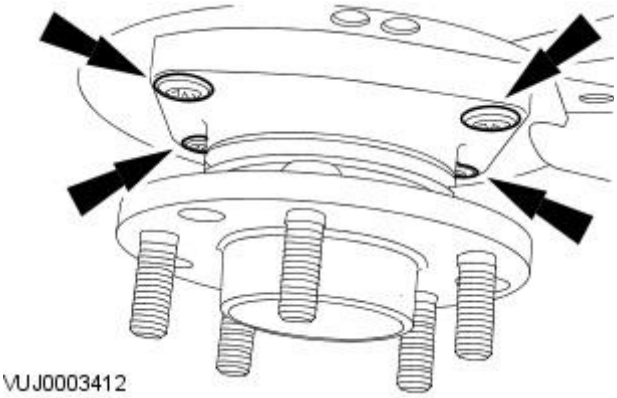
VUJ0003412

6. Remove the wheel hub.

- Remove the retaining bolts.

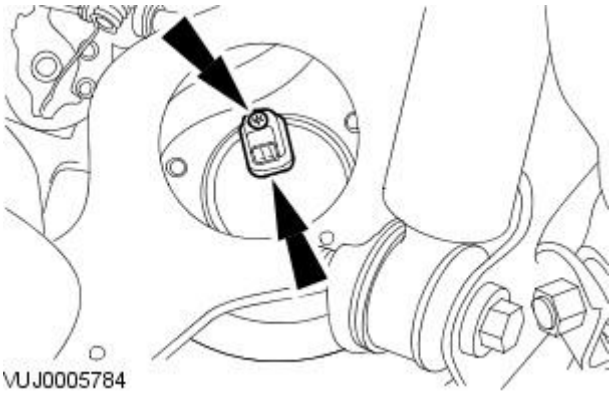
VUJ0005784

7. Remove the (ABS) sensor.

- Remove the retaining bolt.

Installation

All vehicles

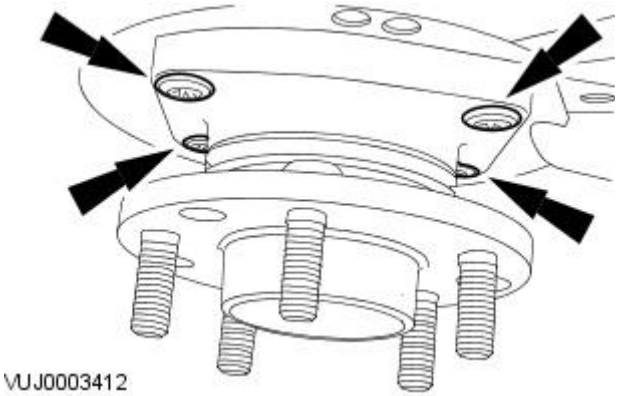

1. Install the wheel hub.

- Tighten to 63 Nm.

Vehicles with 2.5L or 3.0L engine

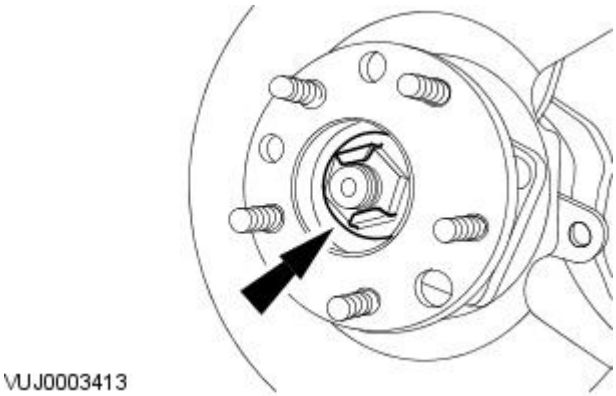

2. Install a new rear halfshaft retaining nut.

- Tighten to 270 Nm.

Vehicles with 2.0L engine

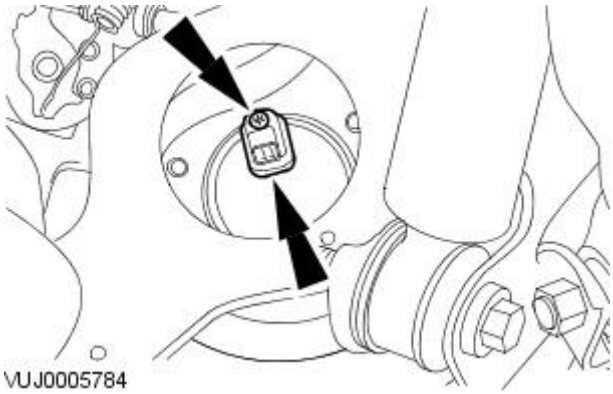

3. Install the (ABS) sensor.

- Tighten to 7 Nm.

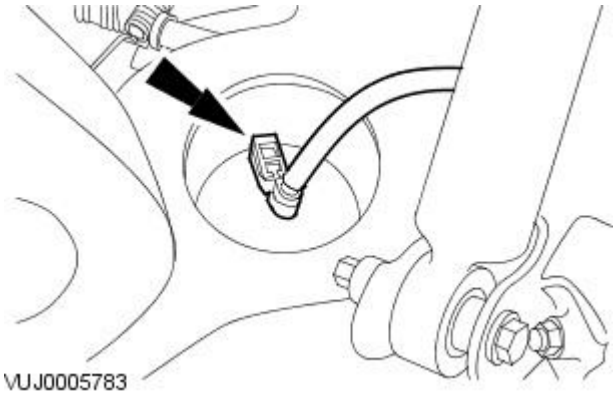

4. Reconnect the (ABS) sensor electrical connector.

All vehicles

5. Install the rear brake disc.
For additional information, refer to: Brake Disc (206-04 Rear Disc Brake, Removal and Installation).

Rear Suspension - Wheel Knuckle

Removal and Installation

Removal

1. Remove the wheel hub.
   For additional information, refer to: Wheel Hub (204-02, Removal and Installation).
2. Remove the anti-lock brake system (ABS) wheel speed sensor wiring harness retaining strap.

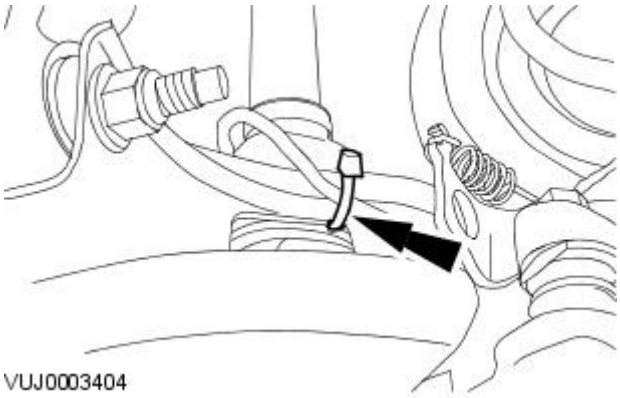

VUJ0003404

3. Detach the ABS wheel speed sensor wiring harness.

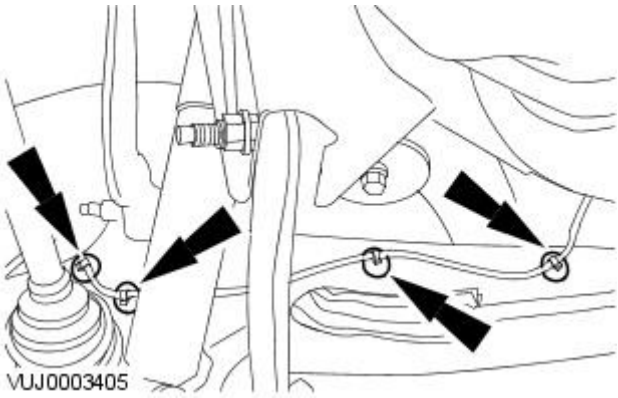

VUJ0003405

4. Detach the parking brake cable and conduit.

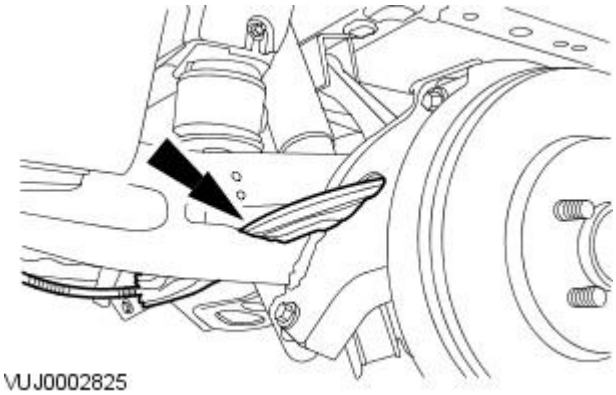

VUJ0002825

5. Detach the parking brake cable and conduit.

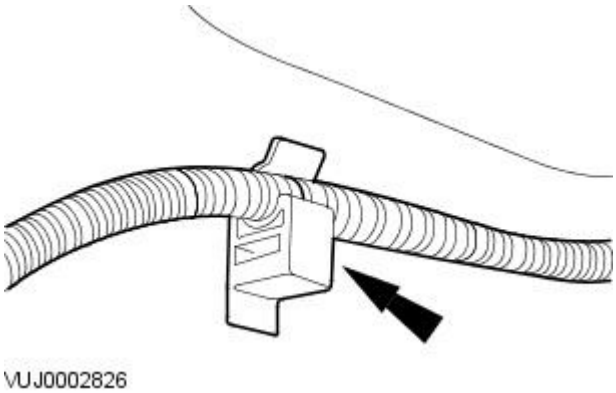

VUJ0002826

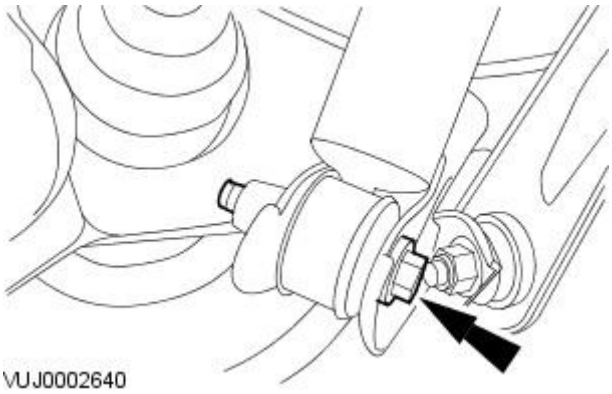

6. Detach the damper.

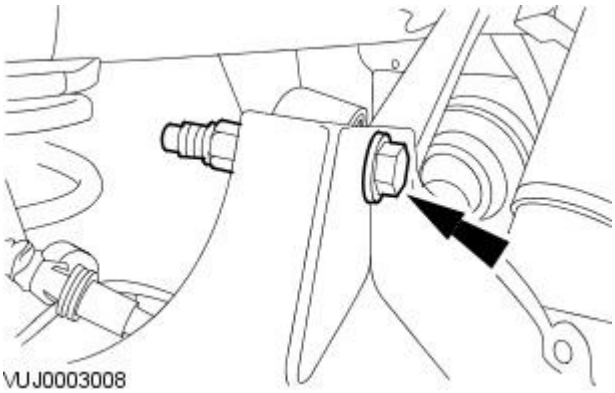

7. Detach the upper arm.

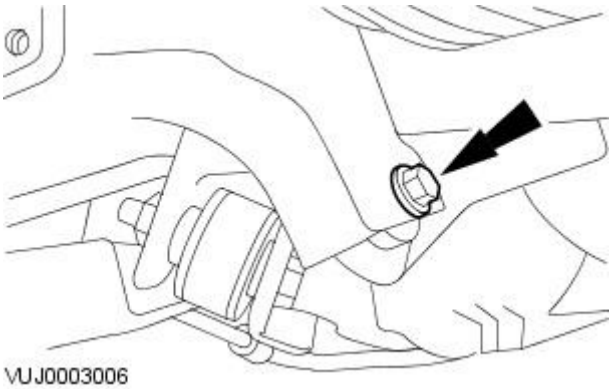

8. Detach the front lower arm.

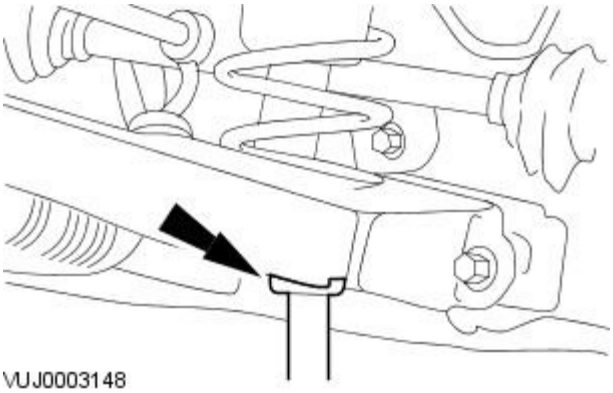

9. CAUTION: Make sure that excessive strain is not placed on the lower arm.

Using a suitable transmission jack, support the rear lower arm.

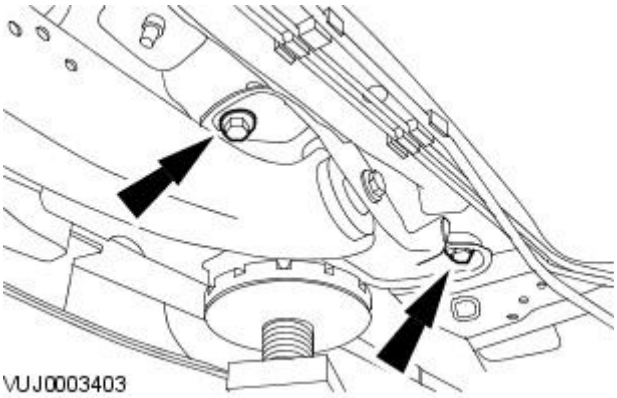

10. Detach the wheel knuckle mounting bracket.

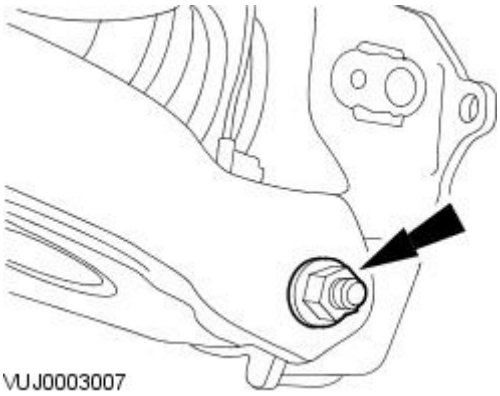

11. Remove the wheel knuckle.

- Detach the rear lower arm.

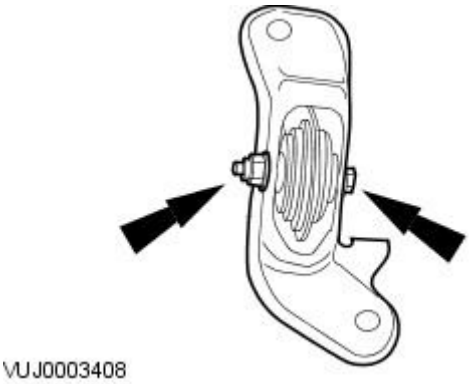

12. CAUTION: Make sure correct position of the mounting bracket is noted before removal.

Remove the wheel knuckle mounting bracket.

Installation

• NOTE: The final tightening of the rear suspension components must be carried out with the vehicle on its wheels.

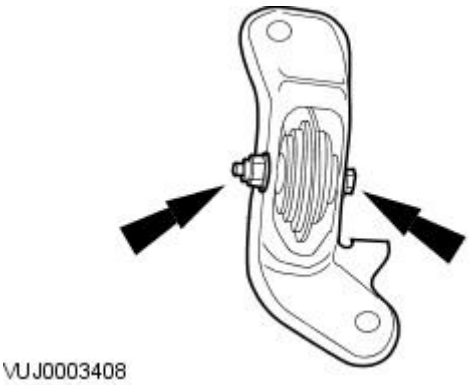

1. CAUTION: Make sure the mounting bracket is installed in the correct position.

Install the wheel knuckle mounting bracket.

- Tighten to 130 Nm.

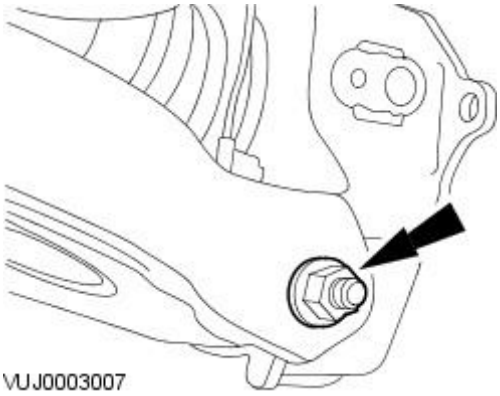

2. Install the wheel knuckle.

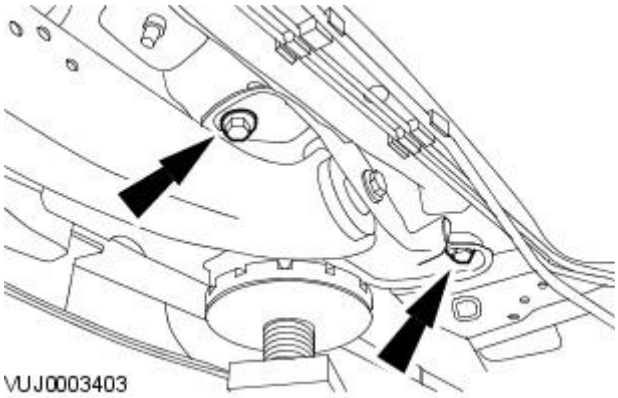

3. Attach the wheel knuckle mounting bracket.

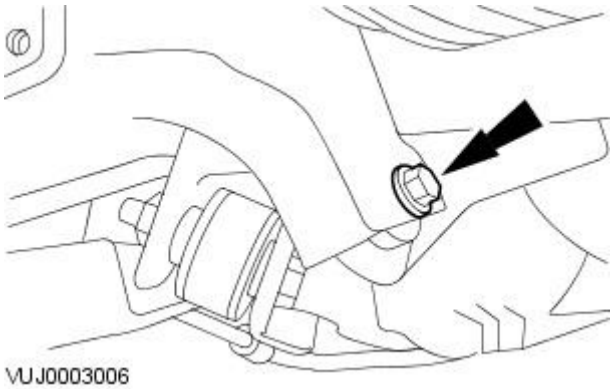

4. Install the front lower arm.

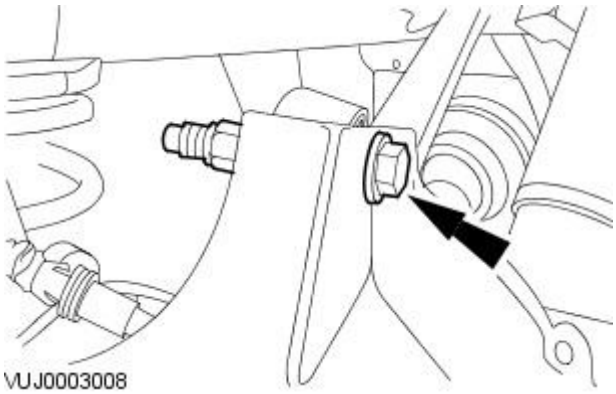

5. Attach the upper arm.

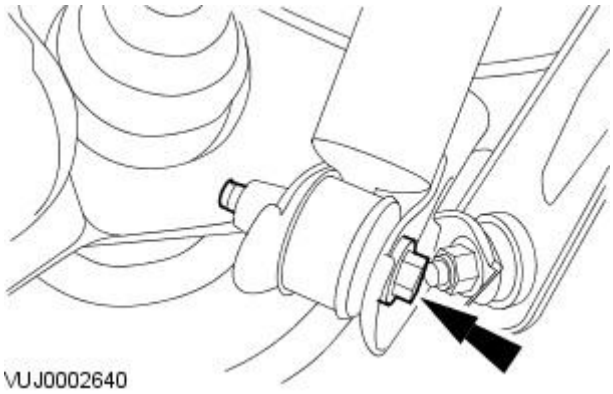

6. Attach the damper.

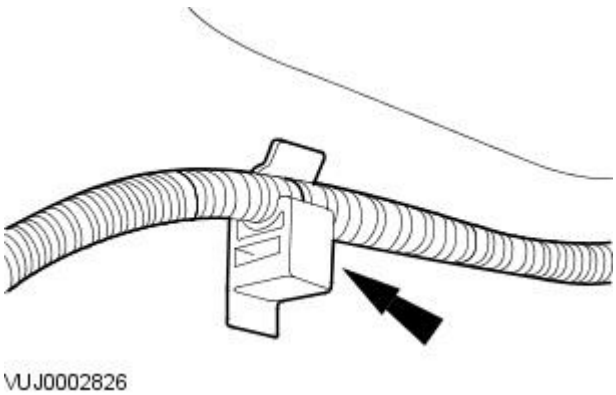

7. Attach the parking brake cable and conduit.

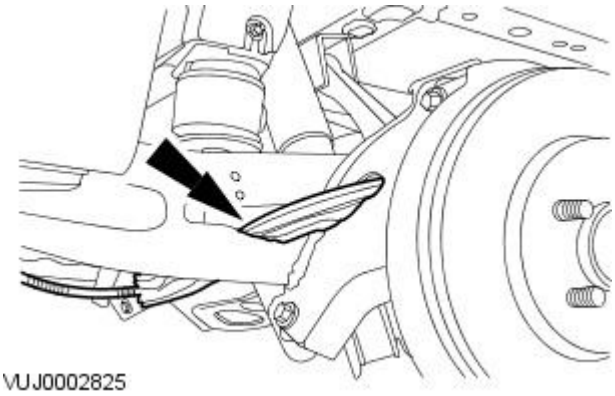

8. Attach the parking brake cable and conduit.

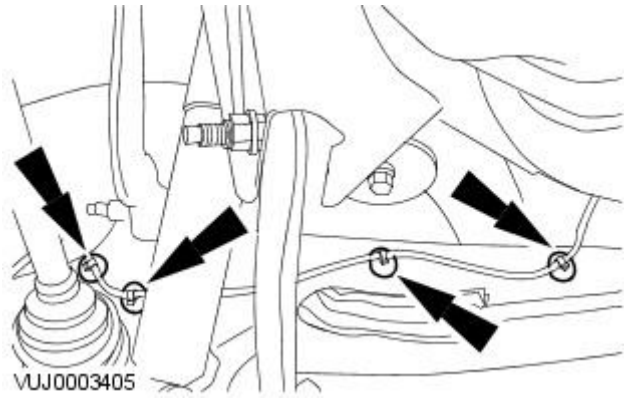

9. Attach the ABS wheel speed sensor wiring harness.

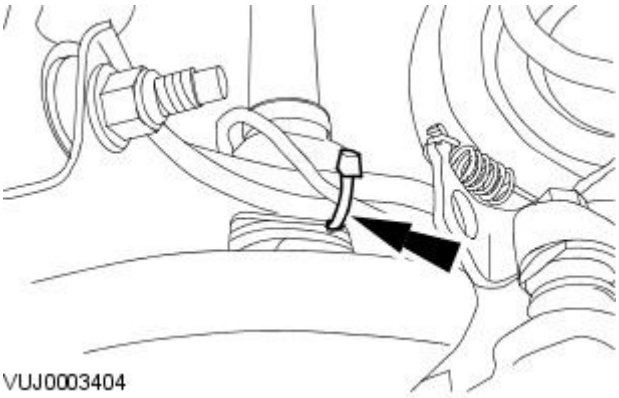

10. Install a new ABS wheel speed sensor wiring harness retaining strap.

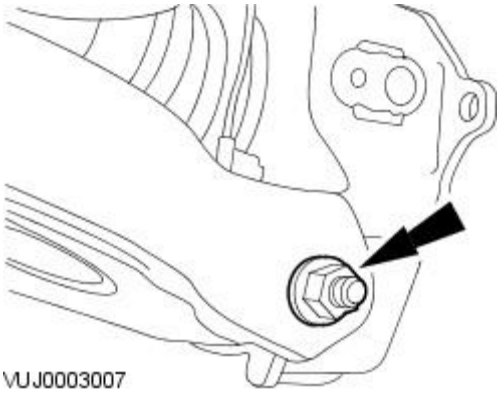

11. Install the wheel hub.
For additional information, refer to: Wheel Hub (204-02, Removal and Installation).

12. Tighten to 124 Nm.

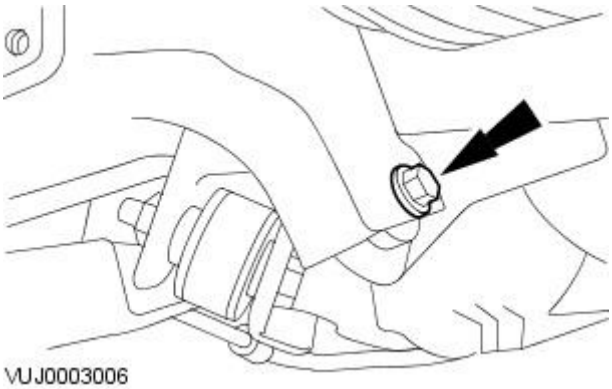

13. Tighten to 124 Nm.

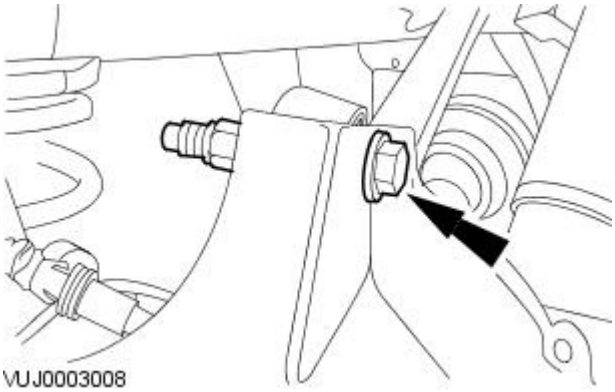

14. Tighten to 124 Nm.

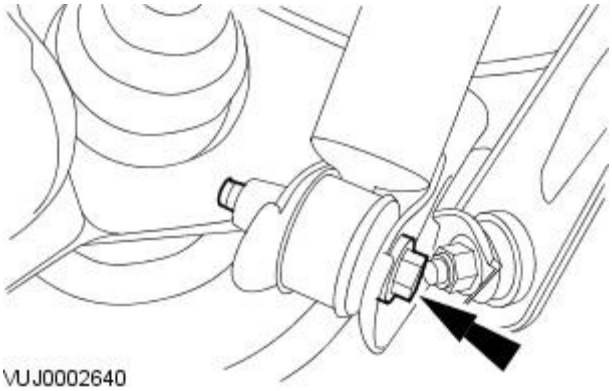

15. Tighten to 115 Nm.

- Note: If you are re-using this fixing on a vehicle built prior to VIN J29472, then tighten to 130 Nm. If you are replacing a fixing on any vehicle, then you must replace both nut and bolt and tighten to 115 Nm.

16. Check the wheel alignment and adjust as necessary.
For additional information, refer to: Wheel Alignment Angles (204-00 Suspension System - General Information, Description and Operation).

Published: 11-May-2011

Rear Suspension - Wheel Knuckle Front Bushing

Removal and Installation

Special Tool(s)	
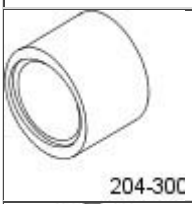 204-300	Support Cup, Rear wheel knuckle front bush 204-300
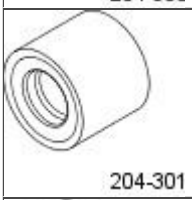 204-301	Remover, Rear wheel knuckle front bush 204-301
204-302	Installer, Rear wheel knuckle front bush 204-302

Removal

1. Remove the wheel knuckle. For additional information, refer to For additional information, refer to: Wheel Knuckle (204-02, Removal and Installation)..
2. Using the special tools, remove the wheel knuckle front bushing.

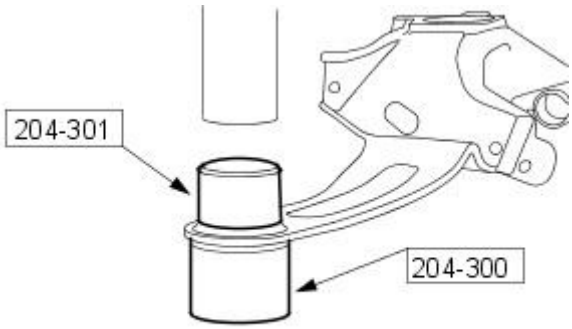

VUJ0003520

Installation

1. Using the special tools, install the wheel knuckle front bushing.

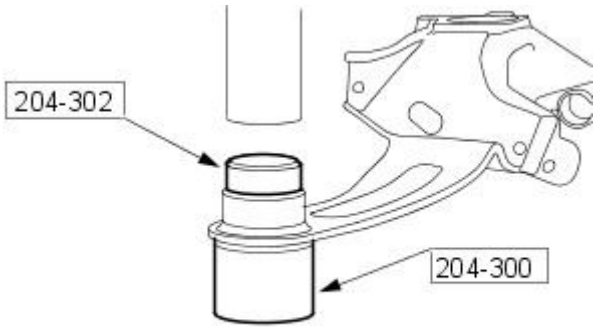

VUJ0003519

2. Install the wheel knuckle. For additional information, refer to For additional information, refer to: Wheel Knuckle (204-02, Removal and Installation)..

Rear Suspension - Wheel Knuckle Rear Bushing

Removal and Installation

Special Tool(s)	
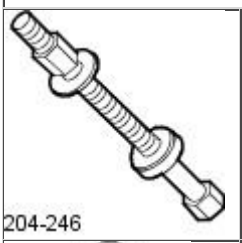 204-246	Forcing Screw, Rear Wheel Knuckle Rear Bush 204-246
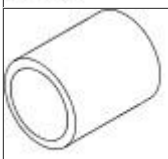 204-296	Support Cup, Rear Wheel Knuckle Rear Bush 204-296
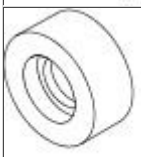 204-298	Remover, Rear Wheel Knuckle Rear Bush 204-298
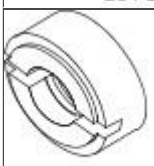 204-297	Installer, Rear Wheel Knuckle Rear Bush 204-297

Removal

1. Remove the rear wheel and tire.
   For additional information, refer to: Wheel and Tire (204-04 Wheels and Tires, Removal and Installation).
2. Detach the stabilizer bar link.

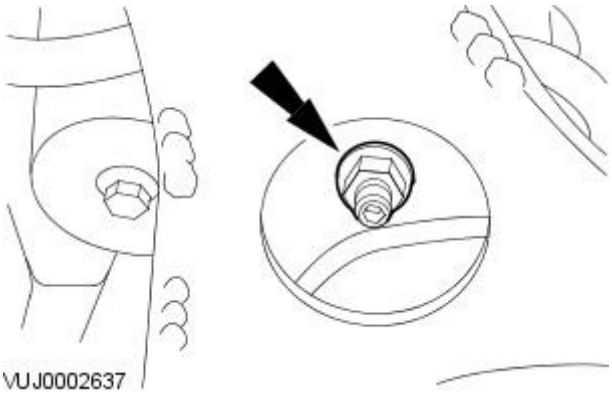

3. CAUTION: Make sure that excessive strain is not placed on the lower arm.

   Using a suitable transmission stand, support the rear lower arm.

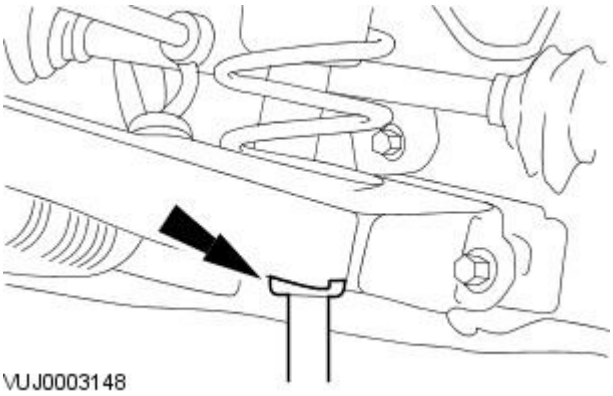

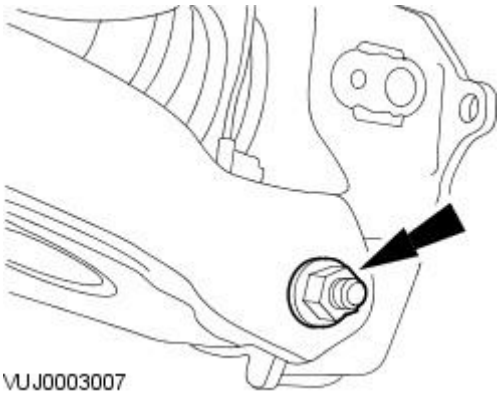

4. Detach the rear lower arm.

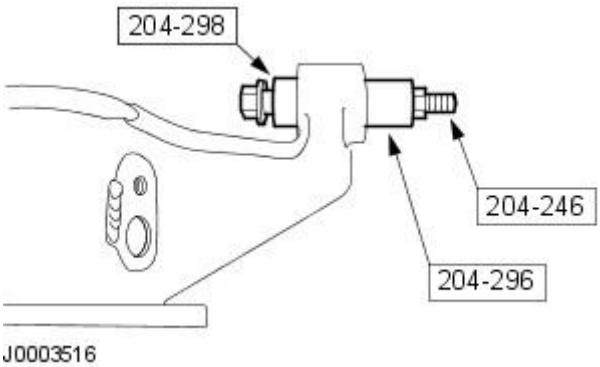

5. CAUTION: Carefully lower the transmission jack.

Using the special tools, remove the wheel knuckle rear bushing.

Installation

• NOTE: The final tightening of the rear suspension components must be carried out with the vehicle on its wheels.

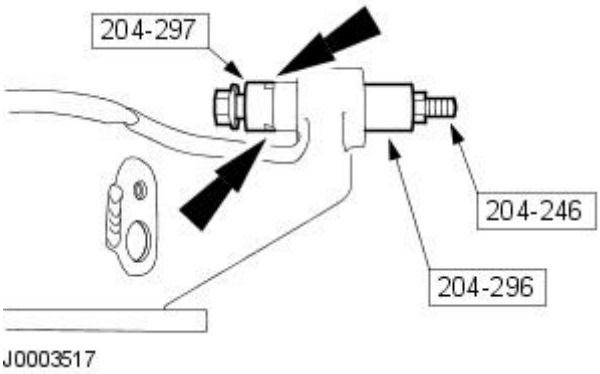

1. Using the special tools, install the wheel knuckle rear bushing.

- Align the bushing horizontally.

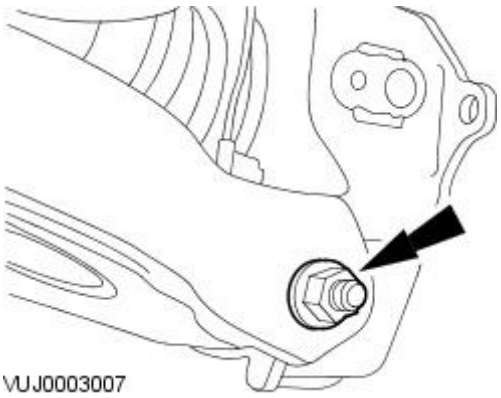

2. CAUTION: Carefully raise the transmission jack.

Attach the rear lower arm.

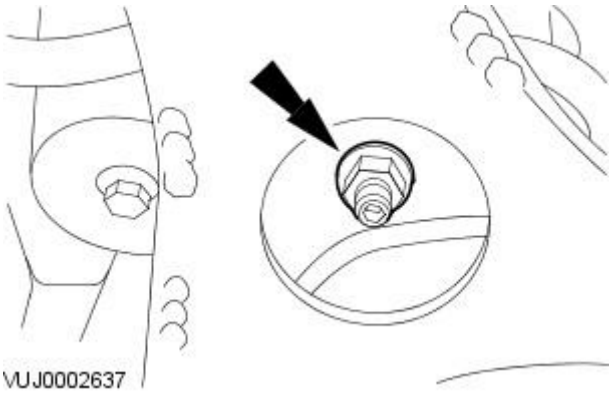

3. Attach the stabilizer bar link.

4. Install the rear wheel and tire.
For additional information, refer to: Wheel and Tire (204-04 Wheels and Tires, Removal and Installation).

5. Tighten to 124 Nm.

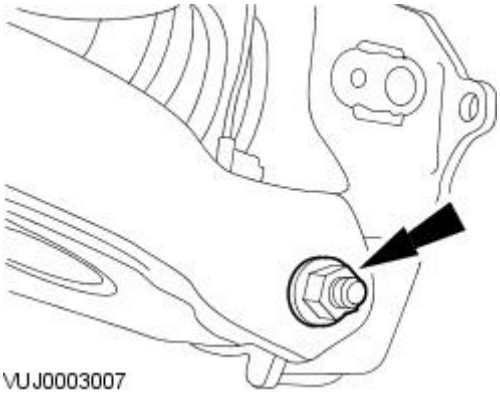

6. Tighten to 35 Nm.

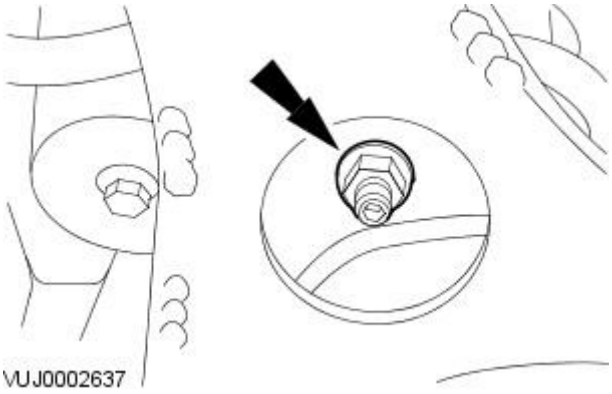

7. Check the wheel alignment and adjust as necessary.
For additional information, refer to: Wheel Alignment Angles (204-00 Suspension System - General Information, Description and Operation).

Wheels and Tires -

Tire Pressures

Wheel Size	Tire Size	Tire Manufacturer	Rim	Engine	Comfort		Normal	
					Front	Rear	Front	Rear
16"	205/55 R16 91 V	Pirelli P6000	6.5Jx16	2.0L	2.07 bar (30 lbf/in²)	2.07 bar (30 lbf/in²)	2.41 bar (35 lbf/in²)	2.21 bar (32 lbf/in²)
				2.5L and 3.0L	2.21 bar (32 lbf/in²)	2.21 bar (32 lbf/in²)	2.62 bar (38 lbf/in²)	2.41 bar (35 lbf/in²)
				2.0L and 2.2L Diesel	2.21 bar (32 lbf/in²)	2.07 bar (30 lbf/in²)	2.41 bar (35 lbf/in²)	2.21 bar (32 lbf/in²)
	205/55 R16 91 H	Continental CH95	6.5Jx16	2.5L and 3.0L	2.21 bar (32 lbf/in²)	2.21 bar (32 lbf/in²)	2.62 bar (38 lbf/in²)	2.41 bar (35 lbf/in²)
17"	225/45 R17 91 Y	Pirelli P Zero	7Jx17	2.5L and 3.0L	2.07 bar (30 lbf/in²)	2.07 bar (30 lbf/in²)	2.62 bar (38 lbf/in²)	2.41 bar (35 lbf/in²)
				2.0L and 2.2L Diesel	2.21 bar (32 lbf/in²)	2.07 bar (30 lbf/in²)	2.48 bar (36 lbf/in²)	2.34 bar (34 lbf/in²)
	225/45 R17 91 H	Continental CH95	7Jx17	2.5L and 3.0L	2.07 bar (30 lbf/in²)	2.07 bar (30 lbf/in²)	2.62 bar (38 lbf/in²)	2.41 bar (35 lbf/in²)
	225/45 R17 94 W	Continental SportContact	7Jx17	2.5L and 3.0L	2.34 bar (34 lbf/in²)	2.34 bar (34 lbf/in²)	2.62 bar (38 lbf/in²)	2.41 bar (35 lbf/in²)
				2.0L and 2.2L Diesel	2.34 bar (34 lbf/in²)	2.34 bar (34 lbf/in²)	2.62 bar (38 lbf/in²)	2.41 bar (35 lbf/in²)
	205/50 R17 93 Y	Pirelli P Zero Rosso	7Jx17	2.0L	2.34 bar (34 lbf/in²)	2.34 bar (34 lbf/in²)	2.48 bar (36 lbf/in²)	2.34 bar (34 lbf/in²)
18"	225/40 R18 92 Y	Pirelli P Zero Nero	7.5x18	2.0L	2.34 bar (34 lbf/in²)	2.21 bar (32 lbf/in²)	2.62 bar (38 lbf/in²)	2.41 bar (35 lbf/in²)
				2.5L and 3.0L	2.48 bar (36 lbf/in²)	2.34 bar (34 lbf/in²)	2.76 bar (40 lbf/in²)	2.41 bar (35 lbf/in²)
				2.0L and 2.2L Diesel	2.34 bar (34 lbf/in²)	2.21 bar (32 lbf/in²)	2.62 bar (38 lbf/in²)	2.41 bar (35 lbf/in²)
16" (temporary use spare wheel)	T125/85 R16 99 M	Pirelli	4Jx16	All Variants	4.14 bar (60 ibf/in²)			

Torque Specifications

Description	Nm	lb-ft	lb-in
Wheel nuts - Vehicles with steel wheels	80	59	-
Wheel nuts - Vehicles with aluminium wheels	103	76	-

Tire Specification

Tire Manufacturer	Tire Size
Pirelli P6000 Powergy	205/55R16 91V
Continental CH95	205/55R16 91 H
Continental SportContact	225/45R17 94W
Pirelli P-Zero	225/45R17 91 Y
Continental CH95	225/45 R17 91 H
Pirelli P-Zero Rosso	205/50R17 93 Y
Pirelli P-Zero Nero	225/40R18 92 Y
Pirelli (Spare Tire)	T125/85R16 99 M

Winter Tire Specification

Tire Manufacturer	Tire Size
Pirelli Snowsport	205/55R16 91 H
Continental Winter Contact TS790	205/55R16 91 H
Pirelli Snowsport	205/50R17 93 H
Pirelli Snowsport	225/45R17 91 H
Pirelli Snowsport	225/40R18 92 H
Continental Winter Contact TS790	225/40R18 92 H

Wheel Specification

Wheel Type	Wheel Size
16 Inch - Steel	16x6.5J
16 Inch - Alloy	16x6.5J
17 Inch - Alloy	17x7J
18 Inch - Alloy	18x7.5J
Spare wheel - steel	4Jx16

Published: 11-May-2011

Wheels and Tires - Safety Precautions

Description and Operation

• WARNINGS:

Do not mix different types of tires on the same vehicle such as radial, bias or bias belted tires except in emergencies (temporary spare usage). Failure to follow this instruction may result in personal injury.

Never run the engine with one wheel off the ground, for example when changing a wheel. The wheel resting on the ground may cause the vehicle to move. Failure to follow this instruction may result in personal injury.

Aftermarket aerosol tire sealants are extremely flammable. Always question the customer to make sure that these products have not been used. Failure to follow this instruction may result in personal injury.

Always wear safety goggles or a face shield when performing any work with wheel and tire assemblies. Failure to follow this instruction may result in personal injury.

Retighten the wheel nuts at (500 miles) 800 Km after any wheel change or anytime the wheel nuts are loosened. Failure to follow this instruction may result in personal injury.

Failure to retighten the wheel nuts at the specified mileage may cause the wheels to become detached while the vehicle is in motion. Failure to follow this instruction may result in personal injury.

Each individual axle, wheel and tire has its own maximum weight or tire inflation rating. Do not overload or over-inflate beyond the capacity of the lowest rated components of the system. Failure to follow these instructions may result in personal injury.

When changing a wheel, make sure that the vehicle cannot move. Always apply the parking brake and select the transmission park position. Failure to follow these instructions may result in personal injury.

Reduce air pressure as much as possible by pushing the valve core plunger in before removing the valve core. Failure to follow this instruction may result in personal injury.

CAUTION: Do not clean aluminium wheels with steel wool, abrasive type cleaners or detergents. Failure to follow these instructions may result in damage to the vehicle.

Published: 11-May-2011

Wheels and Tires - Wheels and Tires

Description and Operation

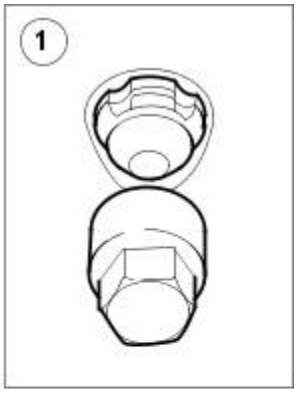

E45065

Item	Part Number	Description
1	—	Locking wheel nut and wrench socket

Locking Wheel Nuts

Locking wheel nuts are fitted to all UK and Mexico vehicles with alloy wheels, and are available as an accessory in certain other markets.

One locking wheel nut is fitted to each road wheel and may only be removed by using the correctly coded socket.

Locking wheel nuts are available in one length only. The correct socket, and cover removal tool if required, is supplied with the vehicle tool kit. Sets of sockets are available to Jaguar dealers.

Recommended Tires

The radial ply tires recommended by Jaguar meet the high speed performance of the vehicle. Only tires of identical specification may be fitted as replacements. Under no circumstances must cross-ply tires be fitted.

Tire Inflation Pressures

All recommended tires, including winter tires, must be inflated to the pressures shown in the Specifications sub-section. Inflation pressures must only be checked when the tires are cold.

If it is necessary to use non-recommended tires, they must be inflated to 0.14 bar (2 lbf/in^2) above the pressure for the recommended tires, Jaguar specified tires are marked with a letter 'J' on the side wall.

Tire Replacement and Wheel-Interchanging

When the replacement of a tire is necessary, it is preferable to fit a complete set. If two replacement tires are fitted (to one axle), they must be of the same manufacturer and type as those on the other axle.

No attempt must be made to interchange wheels from the front to the rear or vice-versa, as wear produces a characteristic pattern on each tire depending upon its position on the vehicle. If this position is changed after wear has occurred, the performance of the tire will be adversely affected.

New tires must be balanced before fitting to the vehicle.

Vehicles fitted with Tire Pressure Monitoring System

On vehicles fitted with TPMS, care must be taken when removing and refitting tires to ensure that the tire pressure sensor is not damaged.

Vehicles fitted with TPMS can be visually identified by an external metal locknut and valve of the tire pressure sensor on the road wheels. Vehicles without TPMS will have rubber tire valve.

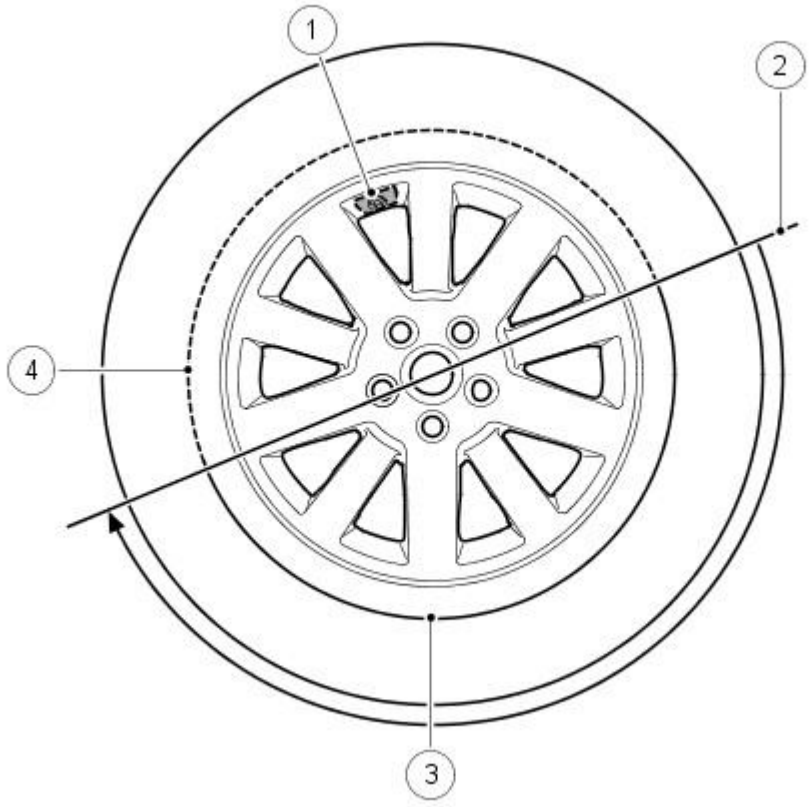

Item	Part Number	Description
1	-	Tire valve and pressure sensor
2	-	Tire fitting/removal tool initial start position
3	-	High tire and bead tension area
4	-	Low tire and bead tension area

When removing the tire, the bead breaker must not be used within 90º of the tire valve in each direction on each side of the tire.

When using the tire removal machine, the fitting arm start position must be positioned as shown in the tire changing illustration for each side of the tire. The wheel can then be rotated through 180 degrees in a counter-clockwise direction. This will relieve tension from the tire bead allowing the remaining 180 degrees of the tire to be manually pulled from the rim.

When refitting the tire, position the fitting arm as shown. Rotate the tire and take care that the bead on the low tension side of the tire does not damage the sensor.

Winter (Snow) Tires

Winter tires must only be fitted in complete four-wheel sets of the same type and size. The maximum speed with winter tires fitted (without snow chains) is 210 km/h (131 mile/h) for 'H' rated, and 240 km/h (150 mile/h) for 'V' rated.

When using snow chains, note that:

- Snow chains must only be fitted to the driven wheels.
- Only Jaguar approved snow chains should be used.
- Snow chains must not be used on roads which are clear of snow.
- The maximum speed with snow chains fitted is 48 km/h (30 mile/h).
- Traction control (where fitted) must be switched OFF when using snow chains.

Rotational Indicators

Some recommended winter tires may have an arrow moulded in the sidewall to indicate the correct direction of rotation. It is essential that these tires are fitted so that the arrow is pointing in the direction of rotation.

Some of the recommended tires for normal and winter use have an asymmetric tread pattern. These tires have inside and outside markers which should be fitted appropriately to the wheel.

Temporary-Use Spare Wheel

In certain markets, the spare wheel supplied with the vehicle is of the temporary-use type; it is narrower than the normal road wheel and takes up less room in the wheel luggage compartment.

When using this type of spare wheel note that:

- Maximum speed must not exceed 80 km/h (50 mile/h).
- The normal road wheel must be replaced as soon as possible.
- Only one temporary-use wheel may be fitted to the vehicle at any time.
- Traction control (where fitted) must be switched OFF.

Tread Wear Indicator

Tread wear indicators are molded into the bottom of the tread grooves across the width of the tire. The tire must be renewed when tread wear indicators become visible, at the surface of the tread, in two or more adjacent tread grooves.

Note that tire tread depth and condition must comply with prevailing local legislation.

Tire Pressure Monitoring System

The TPMS is a driver assistance system which assists the driver to maintain the tire pressures at the optimum level. The TPMS is a standard fitment on NAS vehicles and an optional fitment in other markets. The TPMS system has the following benefits:

- Improve fuel consumption
- Maintain ride and handling characteristics
- Reduce the risk of rapid tire deflation - which may be caused by under inflated tires
- Comply with legislation requirements in relevant markets.

CAUTION: The TPMS is not intended as a replacement for regular tire pressure and tire condition checks and should be considered as additional to good tire maintenance practices.

The TPMS measures the pressure in each of the tires on the vehicle and issues warnings to the driver if any of the pressures deviate from defined tolerances.

• NOTE: During a 'blow-out' a very rapid reduction in pressure is experienced. The system is not intended to warn the driver of a 'blow-out', since it is not possible to give the driver sufficient warning that such an event is occurring, due to its short duration. The design of the TPMS is to assist the driver in keeping the tires at the correct pressure, which will tend to reduce the likelihood of a tire 'blow-out' occurring.

The controlling software for the TPMS is located within a TPMS module. The software detects the following:

- the tire pressure is below the recommended low pressure value - under inflated tire
- the position of the tire on the vehicle
- malfunction warning.

The system comprises a TPMS module, a RF antenna, 4 initiators and 4 tire pressure sensors (the space saver spare wheel is not fitted with a sensor).

The TPMS module is located under the Right-Hand (RH) side of the rear seat. The RF antenna is located behind the rear bumper. The front initiators are positioned at the front of the wheel arches. The rear initiators are positioned at the rear of the rear wheel arches.

The 4 initiators are hardwired to the TPMS module. The initiators transmit 125 KHz Low Frequency (LF) signals to the tire pressure sensors which respond by modifying the mode status within the RF transmission. The 315 MHz RF signals are detected by the RF antenna which is connected directly to the TPMS module. The received RF signals from the tire pressure sensors are passed to the TPMS module and contain identification, pressure, temperature and acceleration information for each wheel and tire.

The TPMS module communicates with the instrument cluster via the high speed Controller Area Network (CAN) bus to provide the driver with appropriate warnings. The TPMS module also indicates status or failure of the TPMS or components.

Tire Location and Identification

The TPMS can identify the position of the wheels on the vehicle and assign a received tire pressure sensor identification to a specific position on the vehicle, for example FL (front left), FR (front right), RL (rear left) and RR (rear right). This feature is required because of the different pressure targets and threshold between the front and rear tires.

The wheel location is performed automatically by the TPMS module using an 'auto-location' function. This function is fully automatic and requires no input from the driver. The TPMS module automatically re-learns the position of the wheels on the vehicle if the tire pressure sensors are replaced or the wheel positions on the vehicle are changed.

The TPMS software can automatically detect, under all operating conditions, the following:

- one or more new tire pressure sensors have been fitted
- one or more tire pressure sensors have stopped transmitting
- reject identifications from tire pressure sensors which do not belong to the vehicle
- two 'running' wheels on the vehicle have changed positions.

If a new tire pressure sensor is fitted on any 'running' wheel, the module can learn the new sensor identification automatically when the vehicle is driven for more than 15 minutes at a speed of more than 20 km/h (12.5 mph).

The tire learn and location process is ready to commence when the vehicle has been stationary or traveling at less than 12 mph (20 km/h) for 15 minutes. This is known as 'parking mode'. The learn/locate process requires the vehicle to be driven at speeds of more than 20 km/h (12.5 mph) for 15 minutes. If the vehicle speed reduces to below 20 km/h (12.5 mph), the learn process timer is suspended until the vehicle speed increases to more than 20 km/h (12.5 mph), after which time the timer is resumed. If the vehicle speed remains below 20 km/h (12.5 mph) for more than 15 minutes, the timer is set to zero and process starts again.

If the tire pressure sensors fitted to the running wheels vehicle are changed, the module can learn the new sensor identifications automatically. The learn function requires no manual intervention by the driver.

Initiator

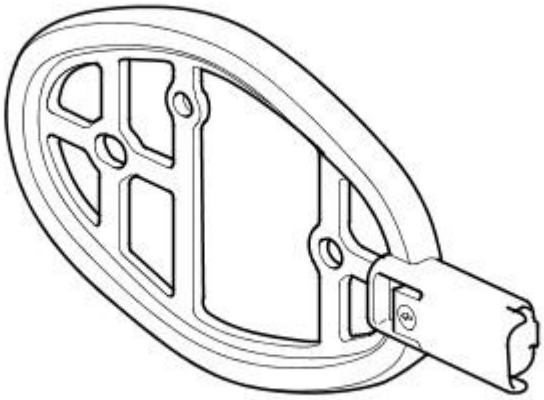

E45552

The initiator is a passive LF transmitter. It transmits signals which are received by the tire pressure sensors prompting them to modify their mode status.

The TPMS module energizes each initiator in turn using LF drivers. The corresponding tire pressure sensor detects the LF signal and responds by modifying the mode status within the RF transmission.

Tire Pressure Sensor

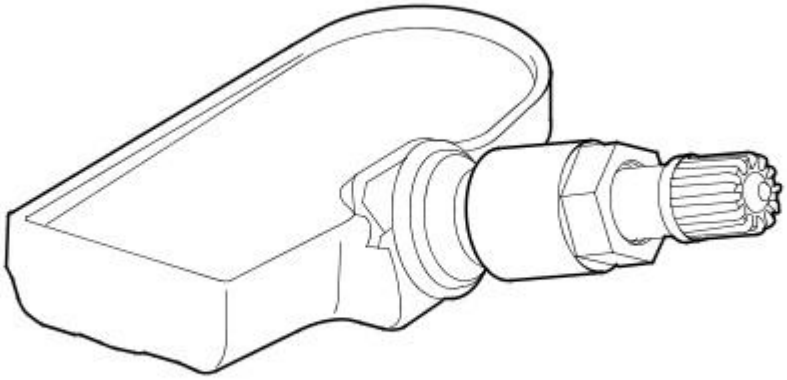

E45553

The TPMS uses active tire pressure sensors which are located on each wheel, inside the tire cavity. The sensor incorporates the tire valve and is secured in the wheel by a nut on the outside of the wheel. The sensor contains a Printed Circuit Board (PCB) which houses a Positive Temperature Coefficient (PTC) sensor, a Piezo pressure sensor, a radio receiver and transmitter and a lithium battery.

The tire pressure sensors use the PTC sensor and the Piezo sensor to periodically measure the pressure and temperature of the air inside the tire. The data is transmitted by RF data signals at 315 MHz.

The RF transmission from the sensor contains a unique identification code in its transmission data. This allows the TPMS to identify the wheel on the vehicle. If the sensor is replaced on a 'running' wheel, the new sensor identification will be learnt when the vehicle is driven at speed of more than 20 km/h (12.5 mph) for 15 minutes.

The tire pressure sensor can also detect when the wheel is rotating. In order to preserve battery power, the sensor uses different transmission rates when the wheel is stationary or moving.

The care points detailed in 'Tire Changing' earlier in this section must be followed to avoid damage to the sensor. If a new sensor is fitted, a new nut, seal and washer must also be fitted and the sensor nut tightened to the correct torque as given in the Removal and Installation section of this manual.

Instrument Cluster

The warning indications to the driver are common on all vehicles fitted with TPMS. The driver is alerted to system warnings by a low tire pressure warning indicator in the instrument cluster and an applicable text message in the message center.

The TPMS module passes system status information to the instrument cluster on the high speed CAN bus. The instrument cluster then converts this data into illumination of the warning indicator and display of an appropriate message.

When the ignition is switched on, the warning indicator is illuminated for 3 seconds for a bulb check.

• NOTE: If the vehicle is not fitted with the TPMS, the warning indicator will not illuminate.

The instrument cluster checks, within the 3 second bulb check period, for a CAN bus message from the TPMS. During this time the TPMS performs internal tests and CAN bus initialization. The warning indicator will be extinguished if the TPMS module does not issue a fault message or tire pressure warning message.

If a TPMS fault warning message is detected by the instrument cluster at ignition on, the warning indicator will flash for 72 seconds after the 3 second bulb check period and then remain permanently illuminated.

If a tire pressure warning message is detected by the instrument cluster at ignition on, the warning indicator will extinguish briefly after the 3 second bulb check period, before re-illuminating to indicate a tire pressure warning.

Principles of Operation

Each time the vehicle is driven the TPMS module activates each initiator in turn to transmit a LF 125 KHz signal to each tire pressure sensor. The LF signal is received by the tire pressure sensor which responds by transmitting a 315 MHz signal which is received by the RF antenna. The signal contains coded data which corresponds to sensor identification, air pressure, air temperature and acceleration data and is passed to the TPMS module.

When the vehicle has been parked for more than 15 minutes and then driven at a speed of more than 12.5 mph (20 km/h), the initiators fire in turn for 18 seconds in the following order:

- Front left
- 18 second pause (for the TPMS module to detect a response from the tire pressure sensor)
- Front right
- 18 second pause
- Rear right
- 18 second pause
- Rear left
- 18 second pause.

Each tire pressure sensor responds in turn which allows the TPMS module to establish the sensor positions at the start of the drive cycle. This process is repeated up to 3 times but less if the sensor positions are already known. The process is known as 'Auto Location' and takes 2 to 5 minutes to complete.

During this period the tire pressure sensors transmit at regular intervals, once every 15 seconds. For the remainder of the drive cycle the tire pressure sensors transmit once every 60 seconds or more often if a change of tire pressure is sensed until the vehicle stops and the TPMS returns to the parking mode.

Once the wheel positions have been established, the initiators stop transmitting the LF signal and do not transmit again until the vehicle has been parked for more than 15 minutes.

The TPMS enters 'Parking Mode' after the vehicle speed has been less than 20 km/h (12.5 mph) for 15 minutes. In parking mode the tire pressure sensors transmit a coded RF signal once every 13 hours. If the tire pressure decreases by more than 0.06 bar (1 lbf/in²), the sensor will transmit more often if pressure in the tire is being lost.

Wheels and Tires - Wheels and Tires

Diagnosis and Testing

General notes

Factory installed tires and wheels are designed to operate satisfactory when inflated to the recommended inflation pressures; refer to the Specifications sub-section. The recommended pressures apply to vehicle loads up to and including full-rated load capacity.

Correct tire pressures and driving technique have an important influence on tire life. Heavy cornering, excessively rapid acceleration and unnecessary sharp braking increase tire wear.

Replacement tires should follow the recommended:

- Size.
- Speed rating.
- Load range.
- Radial construction type.

The use of any other size or type may seriously affect:

- Safety.
- Ride.
- Handling.
- Speedometer and odometer calibration.
- Vehicle ground clearance.
- Tire clearance between body and chassis.
- Wheel bearing life.
- Brake cooling.

Wheels need to be renewed when:

- Impact damaged.
- Heavily corroded.
- Porous.
- Wheel stud holes or seats become damaged.
- They have excessive radial or lateral runout.

Safety notes

• WARNINGS:

Do not mix different types of tires on the same vehicle. Handling may be seriously affected resulting in loss of control. Failure to follow these instructions may result in personal injury.

When using winter tires, observe the direction of the sidewall moulded indicators; correct tire rotational direction is critical. Failure to follow these instructions may result in personal injury.

A tire and wheel must always be correctly matched. Wider or narrower tires than recommended could cause danger through sudden deflation. Failure to follow these instructions may result in personal injury.

When using the temporary spare wheel, maximum speed must not exceed 50 mile/h (80 km/h). Drive with caution and replace with the specified wheel / tire assembly as soon as possible. Failure to follow these instructions may result in personal injury.

Traction control (if available) must not be engaged with a temporary spare wheel fitted. Failure to follow these instructions may result in personal injury.

When changing a wheel, make sure that the vehicle cannot move. Always apply the parking brake and select the transmission park position. Failure to follow these instructions may result in personal injury.

Never run the engine with one wheel off the ground, for example, when changing the wheel. The wheel resting on the ground may cause the vehicle to move. Failure to follow these instructions may result in personal injury.

Tighten the wheel nuts to specification. Too tight may cause damage, too loose may allow the wheel to become detached. Failure to follow these instructions may result in personal injury.

Use only wheels and wheel nuts supplied by Jaguar. Aftermarket wheels or wheel nuts may not fit or function correctly and could cause injury or damage. Failure to follow these instructions may result in personal injury.

Inspection and Verification

1. **1.** Verify the customer's concern by driving the vehicle.
2. **2.** Visually inspect for obvious signs of damage:

Visual Inspection Chart

Mechanical
Incorrect tire pressure
Wheel imbalance
Tires worn beyond tread wear indicators
Cuts
Abrasions

Mechanical
Bulges (blister)
Ply separation
Embedded objects
Impact damage
Incorrect speed rating
Incorrect load rating
Incorrect rotational direction

3. **3.** If an obvious cause for an observed or reported concern is found, correct the cause (if possible) before proceeding to the next step.
4. **4.** If the concern is not visually evident, verify the symptom and refer to Symptom Chart.

Tire Wear Inspection

To maximize tire performance, inspect the tires for signs of incorrect inflation and uneven wear which may indicate a need for balancing, rotation or front suspension alignment. Tires should also be checked frequently for cuts, stone bruises, abrasions, blisters, and for objects that may have become embedded in the tread. More frequent inspections are recommended when rapid or extreme temperature changes occur or when road surfaces are rough or occasionally littered with debris.

Tire Wear Diagnosis

New tires should be installed if the wear indicators are exposed or if there is severe shoulder wear. Shoulder wear is usually caused by either excessive camber or excessive toe on radial tires.

Sometimes incorrect rear toe settings or damaged struts will cause severe cupping' or scalloped' tire wear on non-drive wheels.

Incorrect rear toe alignment will also cause other unusual wear patterns.

Road Test

A tire vibration diagnostic procedure always begins with a road test. The road test and customer interview (if available) will provide much of the information needed to find the source of a vibration.

During the road test, drive the vehicle on a road that is smooth and free of undulations. If vibration is apparent, note and record the following:

- The speed at which the vibration occurs.
- What type of vibration occurs in each speed range.
  - mechanical or audible.
- How the vibration is affected by changes in the following:
  - engine torque.
  - vehicle speed.
  - engine speed.
- Type of vibration-sensitivity: torque sensitive, vehicle speed sensitive or engine speed sensitive.

The following explanations help isolate the source of the vibration.

Torque Sensitive

This means that the condition may be improved or made worse by accelerating, decelerating, coasting, maintaining a steady vehicle speed or applying engine torque.

Vehicle Speed Sensitive

This means that the vibration always occurs at the same vehicle speed and is not affected by engine torque, engine speed or the transmission gear selected.

Engine Speed Sensitive

This means that the vibration occurs at varying vehicle speeds when a different transmission gear is selected. It may sometimes be isolated by increasing or decreasing engine speed with the transmission in NEUTRAL or by stall testing with the transmission in gear. If the condition is engine speed sensitive, the cause is probably not related to the tires.

If the road test indicates that there is tire whine, but no shake or vibration, the noise originates with the contact between the tire and the road surface.

A thumping noise usually means that the tire has a flat or soft spot making a noise as they slap the roadway. Tire whine may be distinguished from axle noise. Tire whine remains the same over a range of speeds.

Symptom Chart

Symptom	Possible Sources	Action
Tires show excess wear on edge of treads	* Tires under-inflated	* Correct pressure to specification.
	* Vehicle overloaded	* Correct as required.
Tires show excess wear on edge of treads (having the correct tire pressures).	* Incorrect toe setting	* Set to specification. For additional information refer toSection 204-00 Suspension System - General Information
Tires show excess wear in center of tread.	* Tires over-inflated	* Correct pressure to specification.
Other excessive tire wear problems	* Incorrect tire pressure	* Correct pressure to specification.
	* Incorrect tire / wheel usage	* Install correct tire and wheel combination.
	* Loose or leaking dampers	* Tighten or install a new as necessary. For additional information refer toSection 204-01 Front Suspension or Section 204-02 Rear Suspension.
	* Geometry out of alignment	* Check and adjust.
	* Loose, worn or damaged suspension components	* Inspect, repair or install a new as necessary.
	* Wheel and tire assembly out of balance	* Balance wheel and tire assembly.

	* Excessive lateral or radial runout of wheel or tire	* Check, repair or install a new as necessary. Refer to the procedure in this section.
Wheel mounting is difficult	* Incorrect application or mismatched parts, including wheel studs and wheel nuts. Corroded, worn or damaged parts	* Clean or install a new part.
Wobble or shimmy affecting wheel runout	* Damaged wheel (eventually damaging wheel bearings and causing uneven tire wear)	* Inspect wheel rims for damage and runout. Install a new wheel rim as necessary.
Excessive vibration, rough steering or severe tire wear	* Loose or incorrect attaching parts	* Tighten or install new parts.
Vehicle vibrations	* Tires / wheels mismatched	* Install correct tire / wheel combination.
	* Inflation pressure too high or low	* Correct pressure to specification.
	* Uneven tire wear	* Refer to Diagnosis and Testing in this section.
	* Out-of-balance wheel, tire, wheel hub or disc assembly	* Determine the out-of-balance component and balance or install a new part.
	* Damaged or distorted wheel from road impact hazard or incorrect handling	* Install a new wheel.
	* Excessive radial runout	* Install a new wheel or tire. Check for incorrect wheel and tire specifications.
	* Excessive lateral runout	* Install a new wheel or tire.
	* Incorrectly seated tire	* Remount the tire.
	* Loose wheel mountings - damaged wheel studs, wheel nuts, worn or broken wheel hub face or foreign material on mounting faces	* Tighten or install new parts. Clean mounting surfaces.
	* Defective wheel bearings	* Install a new bearing set. For additional information refer toSection 204-01 Front Suspensionor Section 204-02 Rear Suspension
	* Brake disc imbalance	* For additional information refer to SectionSection 206-00 Brake System - General Information
	* Water in tires	* Remove water.
	* Loose engine or transmission mounts	* Tighten or install a new mount.
	* Incorrect front end alignment	* Align front end. For additional information refer toSection 204-01 Front Suspension
	* Loose or worn driveline or suspension parts	* Repair or install new parts.
	* Excessive driveshaft runout or imbalance	* Install a new driveshaft, for additional information refer toSection 205-01 Driveshaft
	* Worn or damaged flexible drive joint	* Install a new drive shaft. For additional information refer toSection 205-01 Driveshaft
Damaged wheel hub stud threads	* Sliding wheel across the wheel studs during installation. Loose wheel nuts	* Install new wheel studs.
Broken wheel studs	* Loose or overtightened wheel nuts	* Install new wheel studs.
Corrosion / contamination streaks from the wheel hub wheel stud holes	* Loose wheel nuts	* Check complete assembly. Install new parts. Follow correct torque procedure.
Wheel difficult to remove from wheel hub	* Corrosion	* Apply a small amount of grease to the wheel hub face and spigot location.
Damaged wheel nuts	* Loose wheel assembly	* Install new wheel nuts. Follow correct torque procedure.
	* Over-tightened wheel nuts	* Install new wheel nuts. Follow correct torque procedure.
Frozen wheel nuts	* Corrosion or galling	CAUTION: Do not permit lubricant to contaminate wheel hub stud holes or wheel nut seats. * If corrosion is light, wire brush away corrosion. If corrosion is excessive install new wheel studs and wheel nuts.

Wheels and Tires - Tire Low Pressure SensorVIN Range: J28493->V99999

Removal and Installation

Removal

• NOTE: It is strongly recommended that a new tire low pressure sensor O-ring seal, washer, nut, valve core and cap are installed each time a tire is removed and installed. The O-ring seal, washer, nut, valve core and cap must be replaced if the tire low pressure sensor is removed. Removal of the tire low pressure sensor retaining nut must be regarded as tire low pressure sensor removal. The tire low pressure sensor valve cap must always be in place except when inflating, releasing pressure or checking pressure.

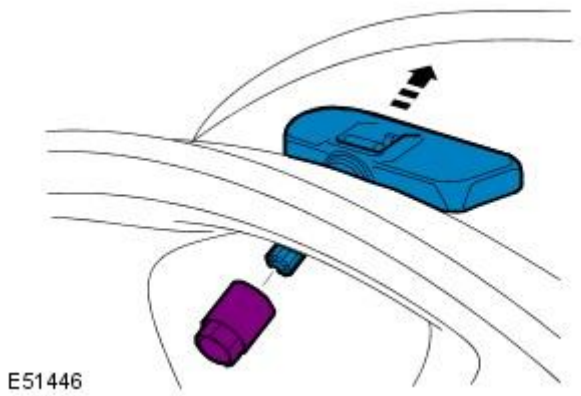

1. Remove the wheel and tire.
For additional information, refer to: Wheel and Tire (204-04 Wheels and Tires, Removal and Installation).

2. CAUTION: Make sure the tire bead is broken from the wheel rim 180 degrees from the tire low pressure sensor. Failure to follow this instruction may result in damage to the tire low pressure sensor.

Remove the tire.

3. CAUTION: Make sure you do not push on the tire low pressure sensor valve. Failure to follow this instruction may result in damage to the valve.

Remove the tire low pressure sensor.

- Remove and discard the tire low pressure sensor retaining nut, valve core, valve cap, O-ring seal and washer.

Installation

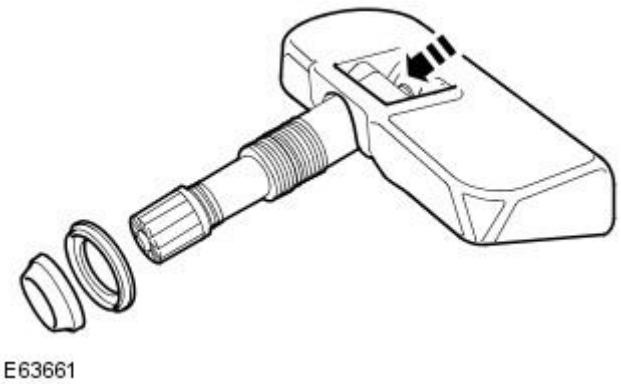

1. CAUTION: The base of the valve stem must be held whilst pushing on the new seal and washer. Failure to follow this instruction may result in damage to the tire low pressure sensor.

• NOTE: Make sure that the washer and O-ring seal are installed correctly. The flat face of washer must be seated against the sensor housing. The taper of O-ring seal points towards the wheel.

Install a new washer and O-ring seal.

- Install a new valve core and valve cap.

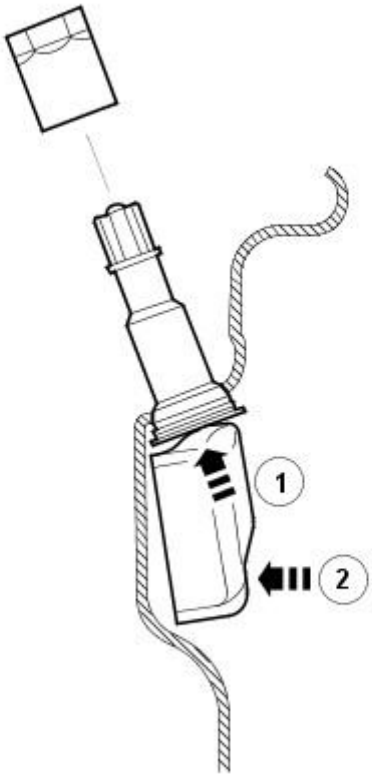

E63771

2. CAUTION: Make sure solvents or cleaning agents of any type are not used to clean the tire low pressure sensor. Failure to follow this instruction may result in damage to the tire low pressure sensor.

• NOTE: If the tire low pressure sensor is replaced on a road wheel, the new tire low pressure sensor identification code will be learnt when the vehicle is first driven. If a new tire low pressure sensor is fitted to the spare wheel the identification code for that tire low pressure sensor must be programmed into the tire pressure monitoring system module. The identification code is printed on the casing of each tire low pressure sensor and is prefixed with ID.

Install the tire low pressure sensor.

1. Support the base of the valve stem when installing the tire low pressure sensor.
2. Hold the tire low pressure sensor against the wheel rim when tightening the retaining nut.

- Install a new tire low pressure sensor retaining nut.
- Tighten the nut to 8 Nm.

3. CAUTION: Make sure no damage occurs to the tire low pressure sensor.

Install the tire and balance the wheel.

4. Install the wheel and tire.
For additional information, refer to: Wheel and Tire (204-04 Wheels and Tires, Removal and Installation).

Wheels and Tires - Tire Pressure Monitoring System (TPMS) Front AntennaVIN Range: J28493->V99999

Removal and Installation

Removal

1. Raise and support the vehicle.
   For additional information, refer to: Jacking (100-02 Jacking and Lifting, Description and Operation).
2. NOTE: Left-hand shown, right-hand similar.

   Detach the wheel arch liner.

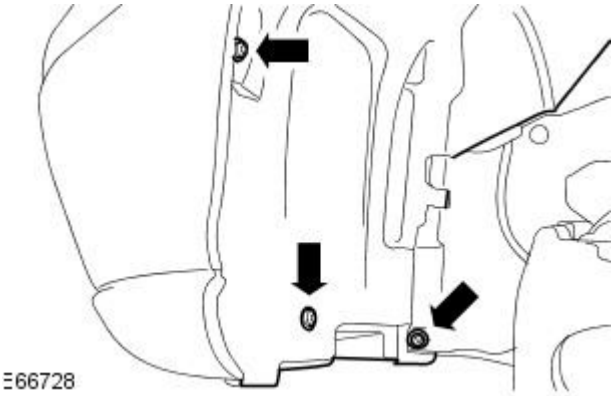

3. NOTE: Left-hand shown, right-hand similar.

   Disconnect the tire pressure monitoring system front antenna electrical connector.

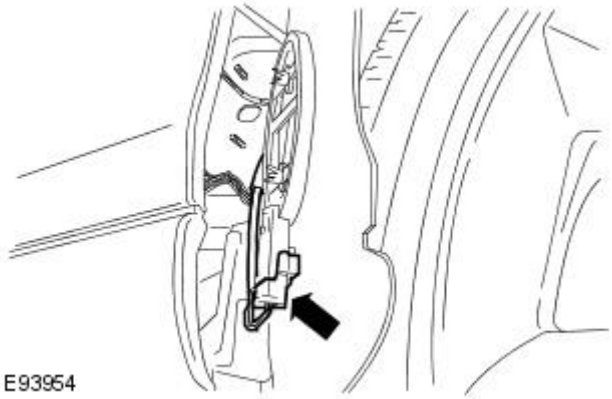

4. NOTE: Left-hand shown, right-hand similar.

   Remove the tire pressure monitoring system front antenna.

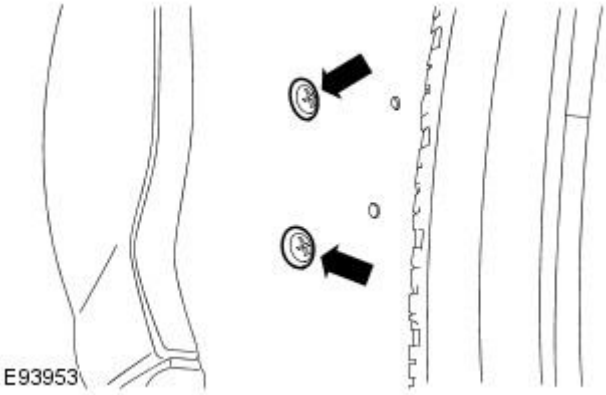

Installation

1. To install, reverse the removal procedure.

Wheels and Tires - Tire Pressure Monitoring System (TPMS) Main AntennaVIN Range: J28493->V99999

Removal and Installation

Removal

1. Raise and support the vehicle.
   For additional information, refer to: Jacking (100-02 Jacking and Lifting, Description and Operation).
2. Detach the rear bumper cover.

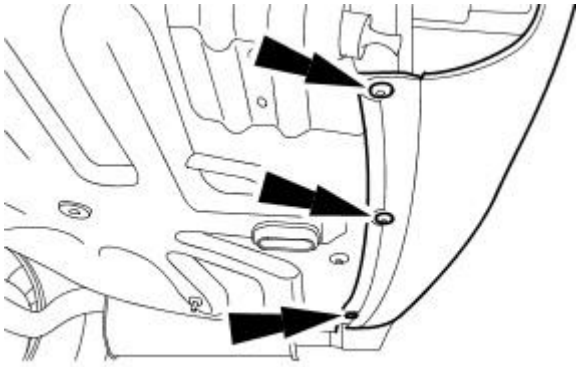
E94324

3. Disconnect the tire pressure monitoring system main antenna electrical connector.

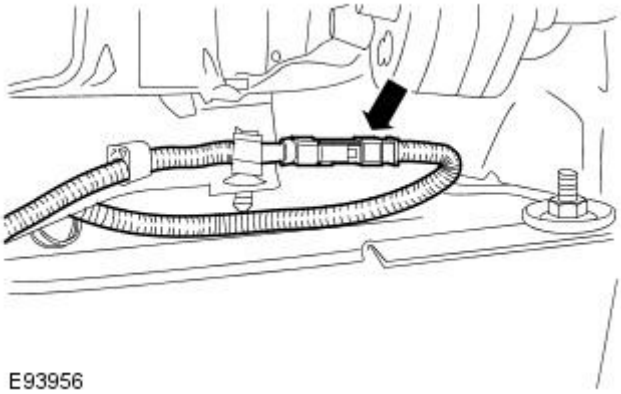
E93956

4. Release the tire pressure monitoring system main antenna electrical harness.

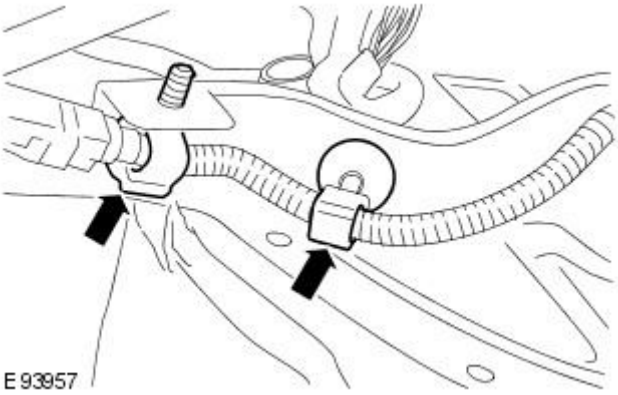
E93957

5. Remove the tire pressure monitoring system main antenna.

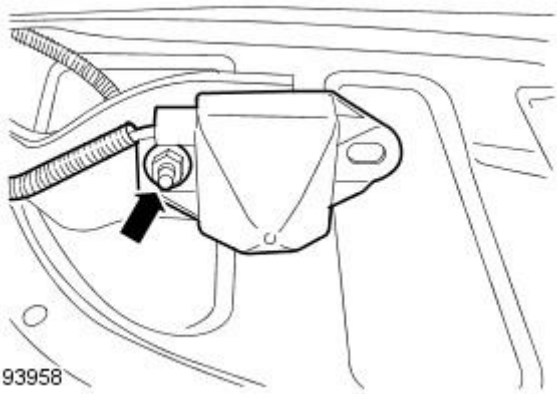
E93958

Installation

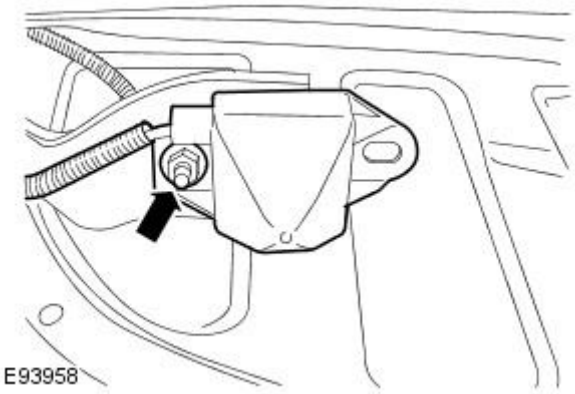

1. To install, reverse the removal procedure.

- Tighten to 5 Nm.

Wheels and Tires - Tire Pressure Monitoring System (TPMS) ModuleVIN Range: J28493->V99999

Removal and Installation

Removal

1. Remove the rear seat cushion.
   For additional information, refer to: Rear Seat Cushion (501-10 Seating, Removal and Installation).
2. Remove the rear scuff plate trim panel.
   For additional information, refer to: Rear Scuff Plate Trim Panel (501-05 Interior Trim and Ornamentation, Removal and Installation).
3. Reposition the floor covering.

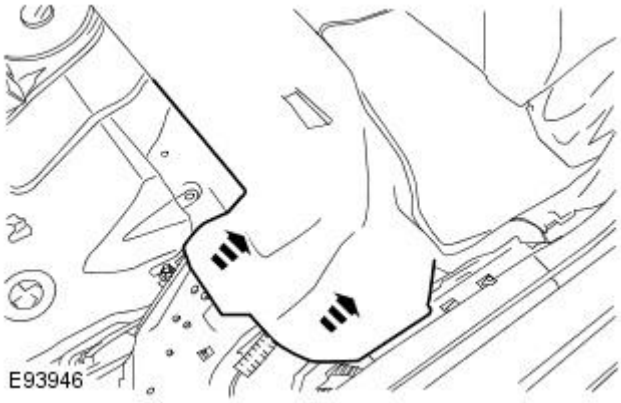

4. Disconnect the tire pressure monitoring system module electrical connectors.

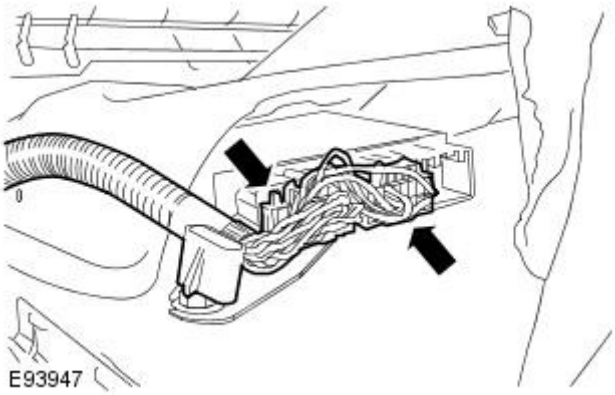

5. Reposition the tyre pressure monitoring system module harness.

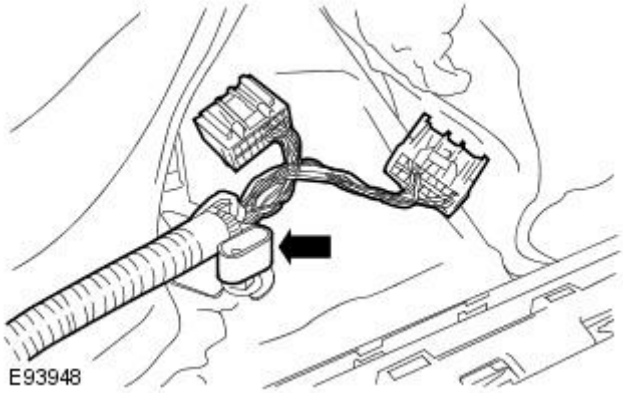

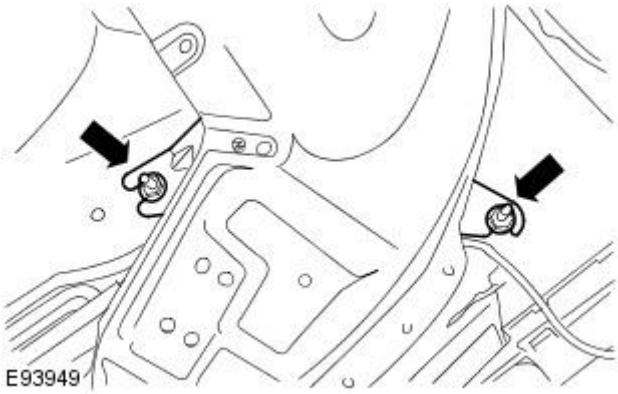

6. Reposition the tire pressure monitoring system module.

- Remove the retaining nuts.

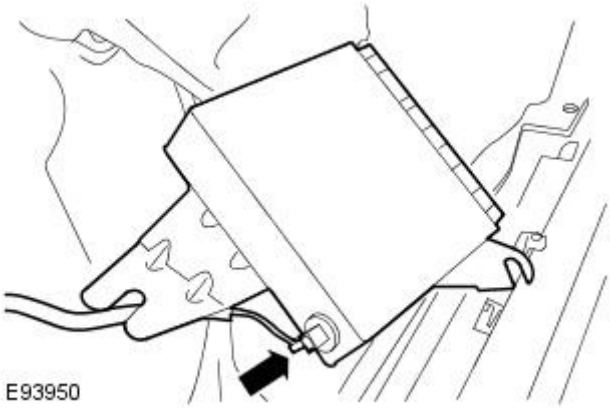

7. Remove the tire pressure monitoring system module.

- Disconnect the external antenna connector.

Installation

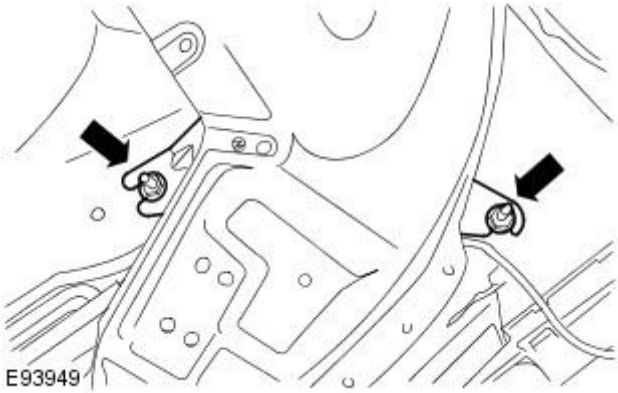

1. To install, reverse the removal procedure.

- Tighten to 5 Nm.

Wheels and Tires - Tire Pressure Monitoring System (TPMS) Rear AntennaVIN Range: J28493->V99999

Removal and Installation

Removal

1. Raise and support the vehicle.
   For additional information, refer to: Jacking (100-02 Jacking and Lifting, Description and Operation).
2. NOTE: Left-hand shown, right-hand similar.

   Disconnect the tire pressure monitoring system rear antenna electrical connector.

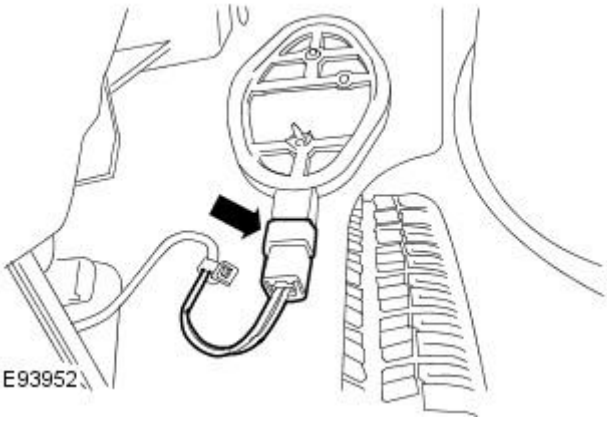

3. NOTE: Left-hand shown, right-hand similar.

   Remove the tire pressure monitoring system rear antenna.

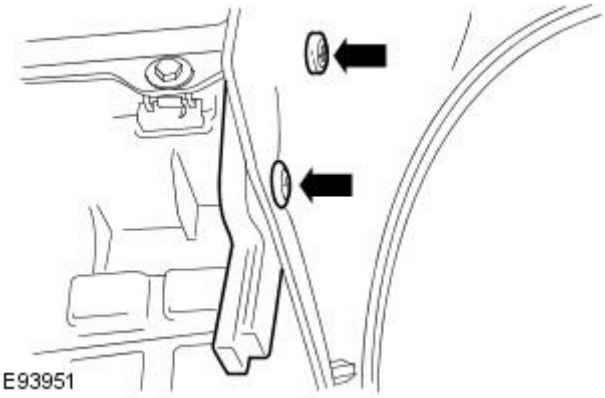

Installation

1. To install, reverse the removal procedure.

Wheels and Tires - Wheel and Tire

Removal and Installation

Removal

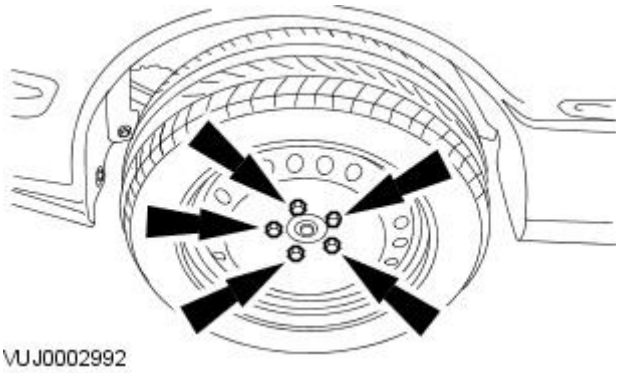

1. CAUTION: Do not use heat to loosen a seized wheel nut, excessive heat may cause damage to the wheel and the wheel bearings.

Loosen the wheel nuts.

2. Raise and support the vehicle. For additional information refer to Section 100-02 Jacking and Lifting.

3. Remove the wheel and tire assembly.

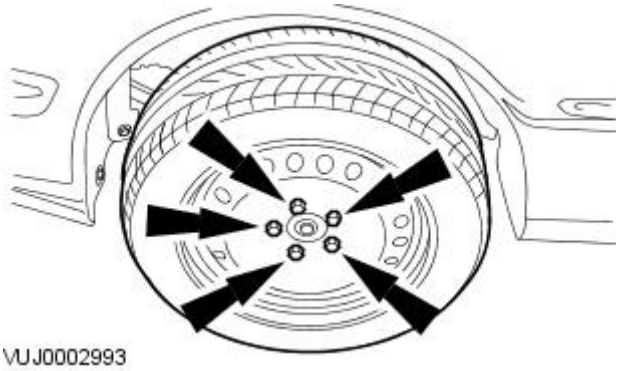

Installation

Vehicles with steel wheels

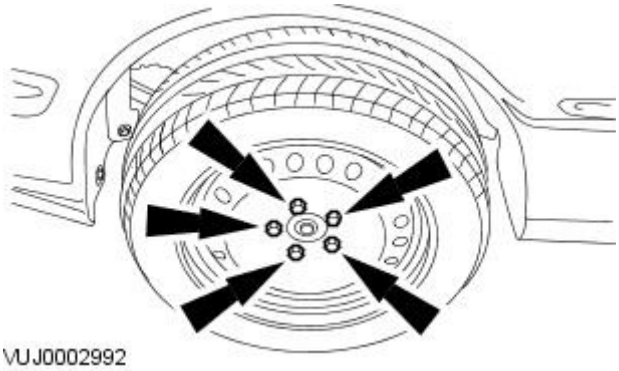

1. WARNINGS:

Make sure that there is no contamination of the wheel, hub or brake disc contact surfaces. Installation without metal to metal contact at the mounting surfaces may cause the wheel nuts to loosen and allow the wheel to detach while the vehicle is in motion. Failure to follow these instructions may result in personal injury.

Apply a small amount of grease to the hub and wheel mating surfaces before installation. Make sure that the grease does not come into contact with the wheel studs or vehicle braking system components. Failure to follow these instructions may result in personal injury.

To install, reverse the removal procedure.

- Tighten to 80 Nm.

Vehicles with aluminium wheels

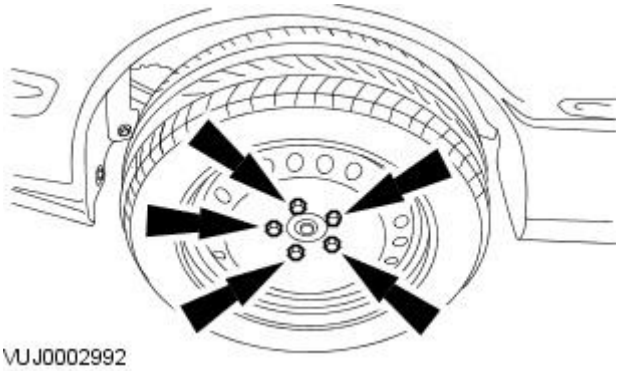

2. WARNINGS:

Make sure that there is no contamination of the wheel, hub or brake disc contact surfaces. Installation without metal to metal contact at the mounting surfaces may cause the wheel nuts to loosen and allow the wheel to detach while the vehicle is in motion. Failure to follow these instructions may result in personal injury.

Apply a small amount of grease to the hub and wheel mating surfaces before installation. Make sure that the grease does not come into contact with the wheel studs or vehicle braking system components. Failure to follow these instructions may result in personal injury.

To install, reverse the removal procedure.

- Tighten to 103 Nm.

Published: 11-May-2011

Driveline System - General Information - Driveline System

Description and Operation

The driveline transfers engine torque to the drive wheels. On vehicles with 2.0L or diesel engines the power is transmitted through the transaxle to the front drive halfshafts. On vehicles with 2.5L and 3.0L engines the power is transmitted through the transaxle to the transfer case. The transfer case then splits the torque 40% to the front drive halfshafts and 60% to the driveshaft which is connected to the rear drive differential and the rear drive halfshafts.

For additional information, refer to: Wheels and Tires (204-04 Wheels and Tires, Description and Operation).

For additional information, refer to: Front Drive Halfshafts (205-04 Front Drive Halfshafts, Description and Operation).

For additional information, refer to: Driveshaft (205-01 Driveshaft, Description and Operation).

For additional information, refer to: Transfer Case (308-07 Transfer Case, Description and Operation).

For additional information, refer to: Rear Drive Halfshafts (205-05 Rear Drive Halfshafts, Description and Operation).

For additional information, refer to: Rear Drive Axle and Differential (205-02 Rear Drive Axle/Differential, Description and Operation).

For additional information, refer to: Manual Transaxle - Vehicles With: 6-Speed Manual Transaxle - MMT6 (308-03 Manual Transmission/Transaxle, Description and Operation).

For additional information, refer to: Transmission Description (307-01 Automatic Transmission/Transaxle, Description and Operation).

The engine is installed at a specific angle. This is determined by the engine mounts. If the engine angle is out of specification, the engine mounts must be inspected for damage and new ones installed if necessary.

Driveline Vibration

Driveline vibration exhibits a higher frequency and lower amplitude than high-speed shake. Driveline vibration is directly related to the speed of the vehicle and is usually noticed at various speed ranges. Driveline vibration can be felt as a tremor in the floorpan or is heard as a rumble, hum or boom. Driveline vibration can exist in all drive modes, but may exhibit different symptoms depending upon whether the vehicle is accelerating, decelerating, cruising or coasting. Check the driveline angles if the vibration is particularly noticeable during acceleration or deceleration, especially at lower speeds.

In order to diagnose vibrations in the driveshaft, refer to the Jaguar Approved Diagnostic System.

Driveline Angle

On vehicles with 2.0L or diesel engines the driveline angularity is the angular relationship between the transaxle and the halfshafts. On vehicles with 2.5L and 3.0L engines the driveline angularity is the angular relationship between the transfer case drive pinion, the driveshaft and the rear differential drive pinion. On all engines variations the factors determining driveline angularity include ride height and engine mounts.

If the wheels and tires and driveline angle are not the cause, carry out the NVH tests to determine whether the concern is caused by a condition in the driveline.
For additional information, refer to: Noise, Vibration and Harshness (NVH) (100-04 Noise, Vibration and Harshness, Description and Operation).

Driveline System - General Information - Driveline System

Diagnosis and Testing

Inspection and Verification

Certain driveline conditions are also common to the engine, transaxle, transfer case, wheel bearings, wheels and tires and other parts of the vehicle. For this reason, make sure the cause of the trouble is in the driveline before adjusting, repairing or installing any new components. For additional information, refer to Section 100-04 Noise, Vibration and Harshness.

1. **1.** Verify the customer concern by carrying out a road test of the vehicle.
2. **2.** Visually inspect for obvious signs of mechanical damage.
3. **3.** If an obvious cause for an observed or reported concern is found, correct the cause (if possible) before proceeding to the next step.
4. **4.** If the concern is not visually evident, verify the symptom and refer to the Symptom Chart.

Transfer Case, Front Transaxle and Axle Noise

Gear Howl and Whine

Howling or whining of the ring gear and drive pinion are due to an incorrect gear pattern, gear damage or incorrect bearing preload.

Bearing Whine

Bearing whine is a high-pitched sound similar to a whistle. It is usually caused by worn/damaged pinion bearings. Bearing noise occurs at all driving speeds. This distinguishes it from gear whine which is speed dependent.

As noted, pinion bearings make a high-pitched, whistling noise, usually at all speeds. If however there is only one pinion bearing that is worn/damaged, the noise may vary in different driving phases.

A wheel bearing noise can be mistaken for a pinion bearing noise.

Knock

Knock, which can occur on all driving phases, has several causes including damaged teeth or gearset.

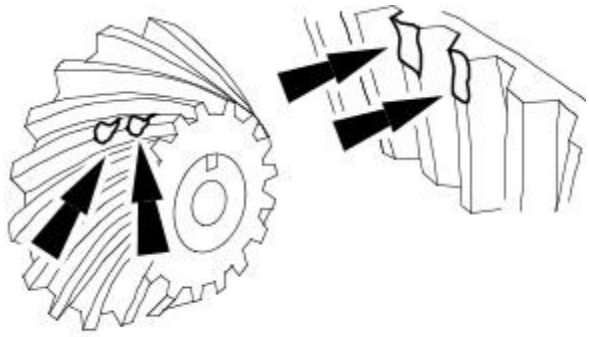

GE0793A

A gear tooth damaged on the drive side is a common cause of the knock.

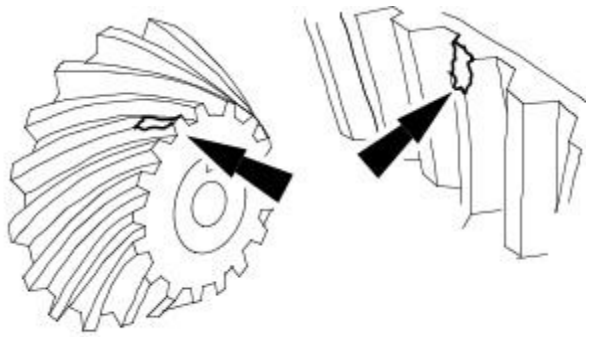

GE0792A

Clunk

Clunk is a metallic noise heard when the automatic transaxle is engaged in REVERSE or DRIVE. The noise may also occur when the throttle is applied or released. Clunk is caused by backlash in the driveline or loose suspension components.

Bearing Rumble

Bearing rumble is usually caused by a worn/damaged wheel bearing. The lower pitch is because the wheel bearing turns at only about one-third of the driveshaft speed. Wheel bearing noise may also be high-pitched, similar to gear noise, but will be evident in all four driving modes.

Symptom Chart

Symptom	Possible Sources	Action

Noise is at constant tone over a narrow vehicle speed range. Usually heard on light driving and coasting conditions	* Rear drive differential. * Transfercase. * Transaxle.	* For additional information, refer to Pinpoint Test A
Noise is the same on driving or coasting.	* Road. * Wheel bearing.	* Normal conditions. * CHECK and INSTALL a new wheel bearing as necessary. For additional information, refer to Section 204-02 Rear Suspension.
	* Worn or damaged driveshaft joint.	* INSTALL new components as necessary.
	* Driveshaft center bearing.	* INSTALL new components as necessary.
Noise is produced with the vehicle standing and driving	* Engine	* For additional information, refer to Section 303-00 Engine System - General Information.
	* Transmission	* For additional information, refer to Section 307-01A Automatic Transmission/TransaxleSection 307-01B Automatic Transmission/Transaxle. For additional information, refer to Section 308-03 Manual Transmission/Transaxle.
Noise is more pronounced while turning	* Front or rear differential side gears and pinion gears.	* For additional information, refer to Section 205-02 Rear Drive Axle/Differential and Section 308-07 Transfer Case.
Loud clunk in the driveline when Shifting from Reverse to Drive.	* Engine idle speed set too high. * Engine mount.	* CHECK and adjust as necessary. * INSPECT and INSTALL new engine mounts as necessary.
	* Transaxle Mount.	* INSPECT and INSTALL new transaxle mounts as necessary.
	* Transaxle.	* For additional information, refer to Section 307-01A Automatic Transmission/TransaxleSection 307-01B Automatic Transmission/Transaxle andSection 308-03 Manual Transmission/Transaxle.
	* Suspension.	* INSPECT and INSTALL new suspension components as necessary.
	* Backlash in the driveline.	* INSTALL new components as necessary.
Clicking, popping or grinding noises	* Inadequate or contaminated lubrication in the constant velocity (CV) joints. * Another component contacting the axle shaft. * Wheel bearings, brakes or suspension components.	* INSPECT, CLEAN and LUBRICATE with new grease as necessary. * INSPECT and REPAIR as necessary. * INSPECT and INSTALL new components as necessary.
Vibration at high speeds.	* Out-of-balance wheels and tires.	* INSTALL new wheels and tires as necessary. For additional information, refer toSection 204-04 Wheels and Tires.
	* Driveline out of balance/misalignment.	* For additional information, refer to the approved Jaguar diagnostic system.
Shudder or vibration during acceleration.	* Powertrain/driveline misalignment.	* CHECK for misalignment. INSTALL new components as necessary.
	* High CV joint operating angles caused by incorrect ride height.	* CHECK the ride height and VERIFY the correct spring rate. INSTALL new components as necessary.
Lubricant leak.	* Transaxle, transfer case or rear drive differential vent.	* INSTALL new components as necessary.
	* Transaxle halfshaft seal, transfer case halfshaft seal, transaxle to transfer case O/ring seal, transfer case drive pinion seal, rear drive differential pinion seal or rear drive halfshaft seal.	* INSTALL new components as necessary.
	* Filler plug.	* INSTALL new components as necessary.
	* Axle rear cover joint.	* INSTALL new components as necessary.

PINPOINT TEST A : EXCESSIVE DRIVELINE NOISE	
TEST CONDITIONS	**DETAILS/RESULTS/ACTIONS**
A1: CHECK NOISE FROM VEHICLE ON ROAD TEST	
	1 Road test vehicle to determine load and speed conditions when noise occurs.
	2 Assess the noise with different gears selected.
	Does the noise occur at the same vehicle speed? **Yes** INSTALL a new final drive. TEST the system for normal operation **No** REFER to Section 204-04 Wheels and Tires, Section 205-01 Driveshaft,Section 205-04 Front Drive Halfshafts, Section 205-05 Rear Drive Halfshafts, Section 303-00 Engine System - General Information, Section 307-01A Automatic Transmission/TransaxleSection 307-01B Automatic Transmission/Transaxle, Section 308-03 Manual Transmission/Transaxle andSection 308-07 Transfer Case.

Published: 11-May-2011

Driveshaft -

Torque Specifications

Description	Nm	lb-ft	lb-in
Driveshaft center bearing retaining bolts	25	18	-
Driveshaft front universal joint retaining bolts	44	32	-
Driveshaft rear universal joint retaining bolts	44	32	-

Driveshaft - Driveshaft

Description and Operation

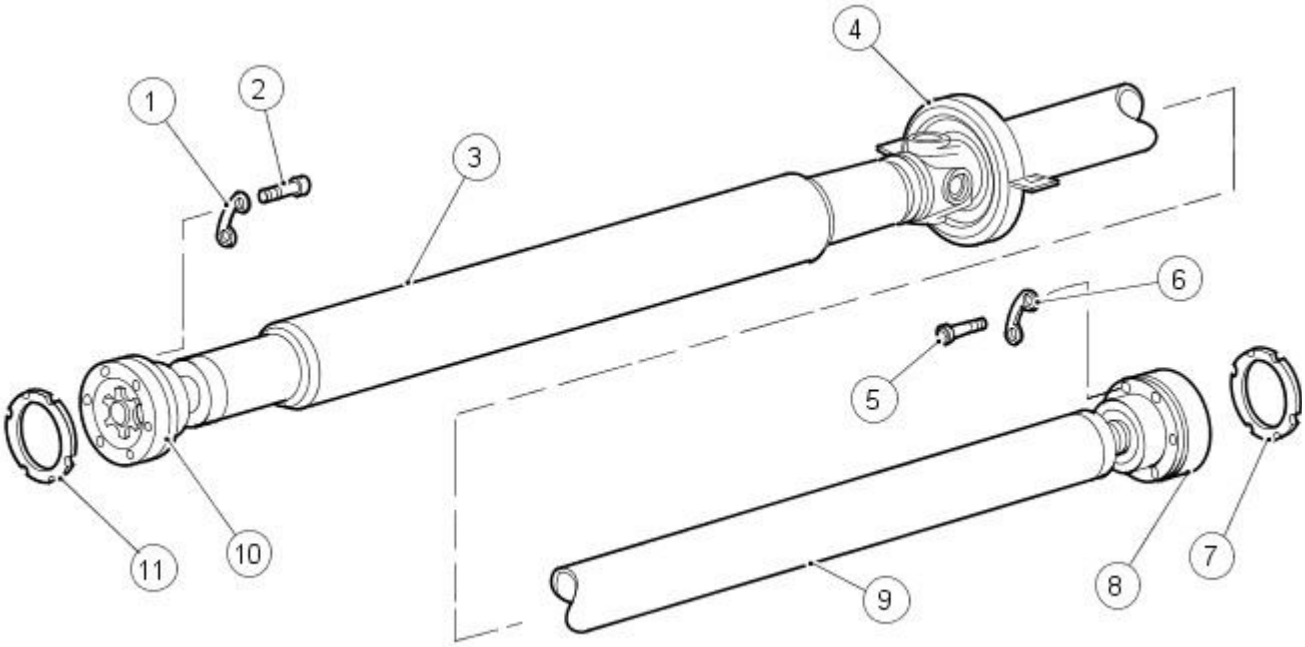

VUJ0002769

Item	Part Number	Description
1	—	Link washer
2	—	Driveshaft universal joint retaining bolt
3	—	Driveshaft front collapsible tube
4	—	Driveshaft center bearing
5	—	Driveshaft universal joint retaining bolt
6	—	Link washer
7	—	Paper gasket
8	—	Driveshaft rear universal joint
9	—	Driveshaft rear tube
10	—	Driveshaft front universal joint
11	—	Paper gasket

WARNING: Under no circumstances must a 2004.25 MY or earlier driveshaft assembly be fitted to a later vehicle. Failure to follow this instruction may result in personal injury.

CAUTION: To preserve 'drive line' refinement, individual parts, other than fixings, MUST NOT be renewed. In the event of any balance or driveshaft component related concern, the complete assembly must be renewed. Under no circumstances may the universal joint be removed from the driveshaft (or its fixings be loosened). Do not drop or subject the driveshaft to damage.

• NOTE: 2004.25 MY driveshaft assemblies may be fitted to earlier model year vehicles. For modification details refer to Driveshaft in this section.

• NOTE: All driveshaft assemblies are balanced. If undercoating the vehicle, protect the driveshaft, universal joints and the drive half shafts to prevent over-spray of the undercoating material.

The driveshaft consists of the following:

- A two piece welded steel tube.
- A center bearing.
- Two universal joints.

Universal Joint

The universal joints are:

- A lubed-for-life design and require no lubrication in service.

Published: 11-May-2011

Driveshaft - Driveshaft

Diagnosis and Testing

For additional information, refer toSection 205-00 Driveline System - General Information.

Driveshaft - Driveshaft Runout and Balancing

General Procedures

1. For additional information, refer to the approved Jaguar diagnostic system.

Driveshaft - Driveshaft

Removal and Installation

Removal

• NOTE: Removal of the driveshaft rear universal joint shown, removal of the driveshaft front universal joint similar.

1. Raise and support the vehicle.
For additional information, refer to: Lifting (100-02 Jacking and Lifting, Description and Operation).

2. NOTE: Mark the position of the driveshaft in relation to the drive pinion flange.

Remove two opposing driveshaft universal joint retaining bolts.

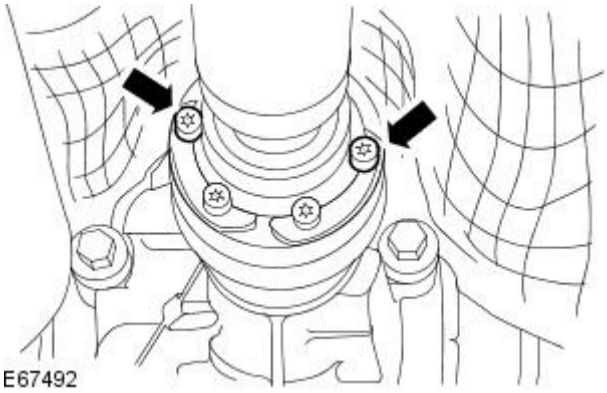
E67492

3. Loosen the remaining driveshaft universal joint retaining bolts.

- Using a suitable tool, detach the driveshaft from drive pinion flange.

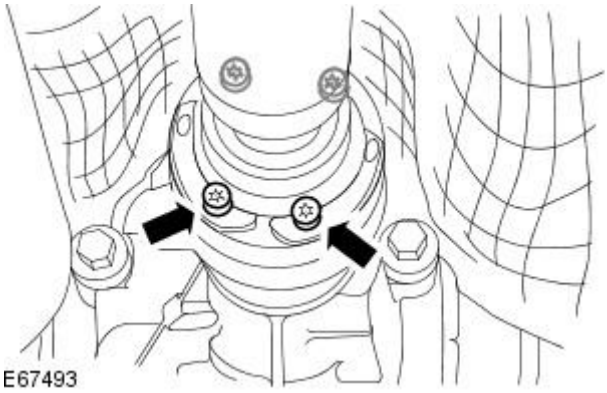
E67493

4. CAUTION: Make sure the outer casing of the driveshaft universal joint is secured to the driveshaft universal joint through the securing holes. Failure to follow this instruction may invalidate the warranty of the driveshaft.

Using suitable tie straps, secure the outer casing of the driveshaft universal joint.

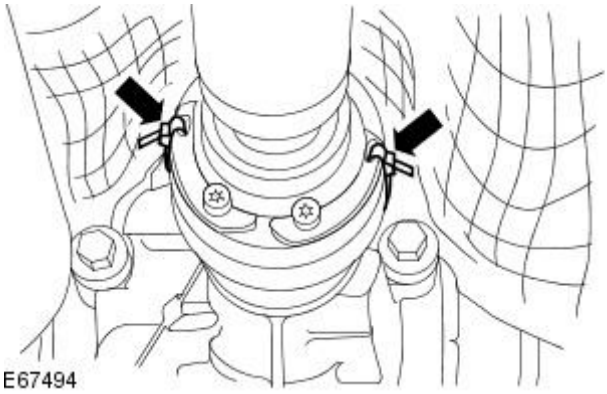
E67494

5. CAUTION: Make sure the front and rear driveshaft sections are supported.

• NOTE: If installed, remove and discard the gasket.

Detach the driveshaft universal joint.

- Remove and discard the driveshaft retaining bolts and link washers.

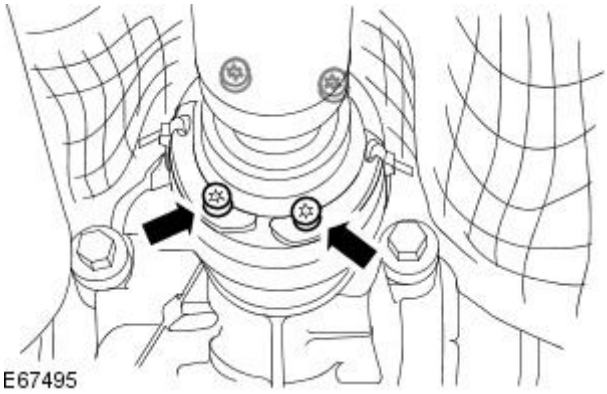
E67495

6. Repeat the above procedure for the driveshaft front universal joint.

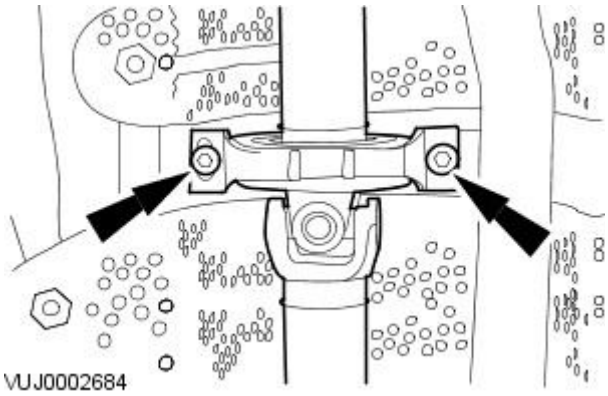

7. CAUTION: Make sure the front and rear driveshaft sections are supported.

Remove the driveshaft.

- Remove driveshaft center bearing retaining bolts.

Installation

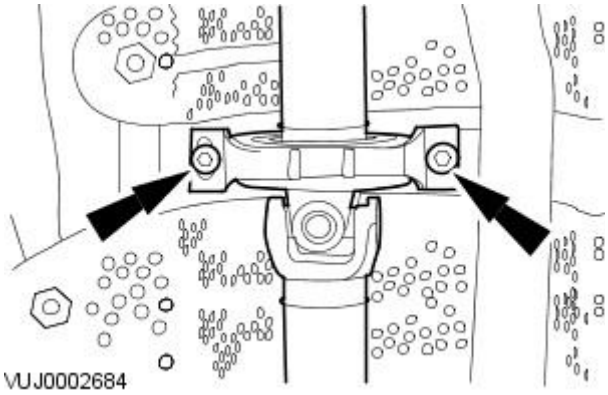

1. CAUTION: Make sure the front and rear driveshaft sections are supported.

Install the driveshaft.

- Loosely install the driveshaft center bearing retaining bolts.

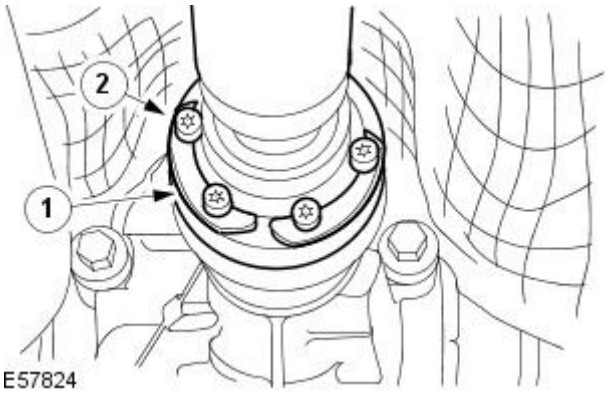

2. CAUTIONS:

INSTALLING A NEW DRIVESHAFT. If a new driveshaft is to be installed, no gasket is required between the driveshaft and the drive pinion flange. Failure to follow this instruction may result in damage to the vehicle.

INSTALLING THE ORIGINAL DRIVESHAFT. If a gasket was removed from between the driveshaft and the drive pinion flange on the driveshaft removal procedure, make sure to install a new gasket. If no gasket was removed from between the driveshaft and the drive pinion flange on the driveshaft removal procedure, a new gasket is not required. Failure to follow this instruction may result in damage to the vehicle.

• NOTE: If a new driveshaft is to be installed align the 'H' on the rear drive axle flange with the paint mark on the driveshaft.

• NOTE: Remove and discard the tie straps.

Attach the driveshaft rear universal joint.

1. Install new driveshaft retaining bolt link washers.
2. Install new driveshaft retaining bolts.
    1. Tighten to 44 Nm.

3. Repeat the above procedure for the driveshaft front universal joint.

4. Fully tighten the driveshaft center bearing retaining bolts.

- Tighten to 25 Nm.

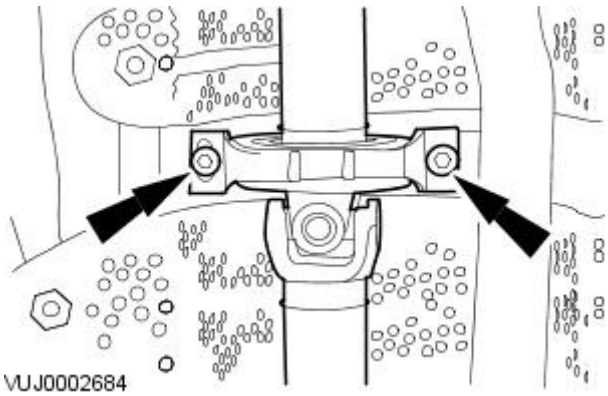

5. Carry out a driveshaft alignment check using specifications found in underbody misalignment checks.
For additional information, refer to: Underbody Misalignment Check (502-00 Uni-Body, Subframe and Mounting System, General Procedures).

Published: 11-May-2011

Rear Drive Axle / Differential -

General Specifications

Item	Specification
Oil type	M2C192A synthetic
Oil capacity	1.2 liters

Torque Specifications

Description	Nm	lb-ft	lb-in
Driveshaft front universal joint retaining bolts	40	30	-
Driveshaft rear universal joint retaining bolts	40	30	-
Axle front retaining bolts	90	66	-
Axle rear retaining bolt stage one	A	-	-
Driveshaft center bearing retaining bolts	25	18	-
Vibration damper retaining bolt	40*	30	-
Drive pinion flange preload lower than specification on used bearings	1.7	-	15
Drive pinion flange preload higher than specification on used bearings	1.7	-	15

A = refer to the procedure for the correct torque sequence.

*Tighten existing fittings on vehicles prior to VIN J24258 to 48 Nm.

Rear Drive Axle / Differential - Rear Drive Axle and Differential

Description and Operation

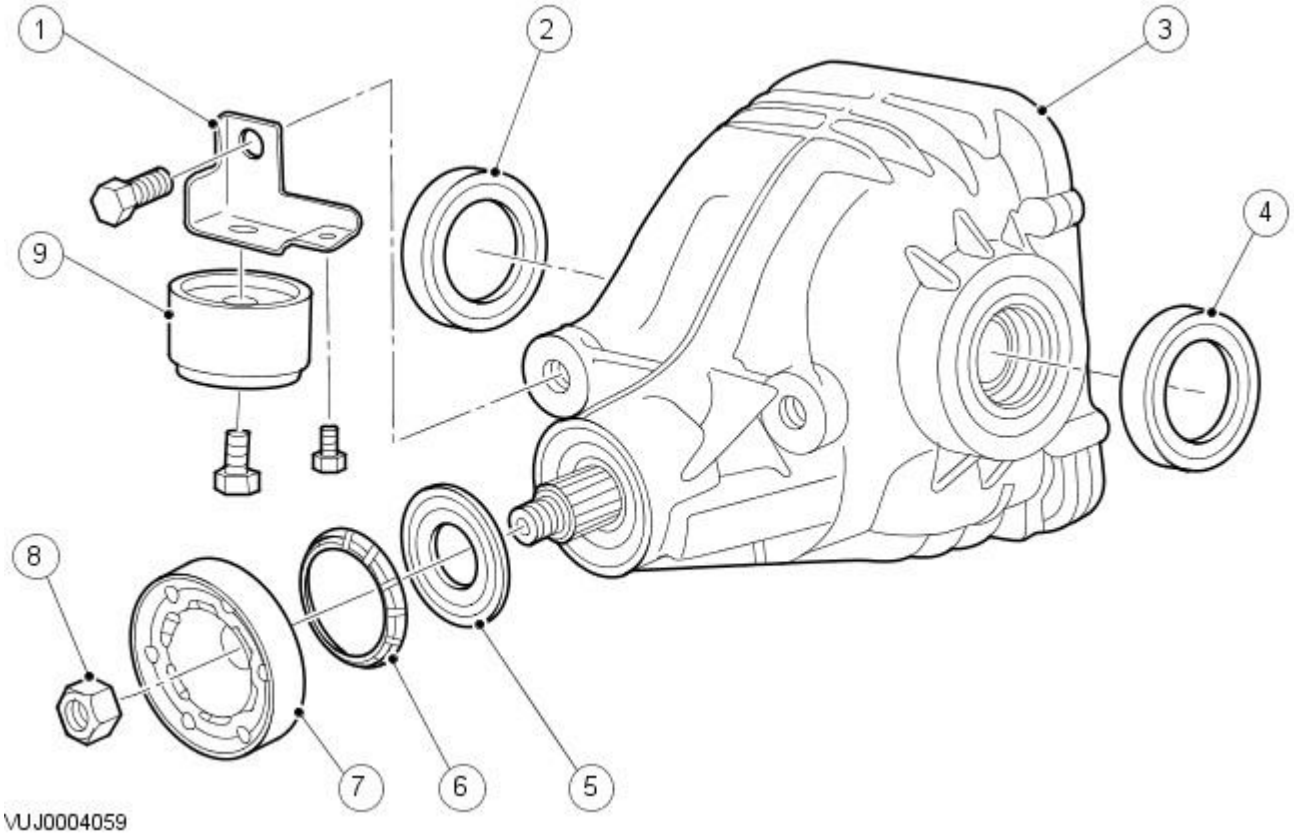

Item	Part Number	Description
1	—	Vibration damper bracket
2	—	Axle shaft oil seal
3	—	Axle housing
4	—	Axle shaft oil seal
5	—	Drive pinion seal
6	—	Drive pinion collapsible spacer
7	—	Drive pinion flange
8	—	Drive pinion flange retaining nut
9	—	Vibration damper

The rear axle drive pinion receives power from the engine through the transaxle and driveshaft. The drive pinion gear rotates the differential drive gear which is bolted to the axle housing outer flange. Inside the axle housing, two differential pinion gears are mounted on a differential shaft which is pinned to the axle housing. These differential pinion gears are engaged with the differential side gears to which the axle shafts are splined. As the differential gear turns, it rotates the axle shafts and rear wheels.

When it is necessary for one wheel and axle shaft to rotate faster than the other, the faster turning differential side gear causes the differential pinion gears to roll on the slower turning differential side gear. This allows differential action between the two axle shafts.

The vibration damper is designed to damp driveshaft boom. It is bolted to the rear differential vibration damper bracket which in turn is bolted to the rear axle.

Published: 11-May-2011

Rear Drive Axle / Differential - Rear Drive Axle and Differential

Diagnosis and Testing

For additional information, refer to Section 205-00 Driveline System - General Information.

Rear Drive Axle / Differential - Axle Shaft Seal

In-vehicle Repair

Special Tool(s)	
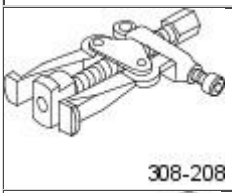	Remover, Axle Shaft Oil Seal 308-208
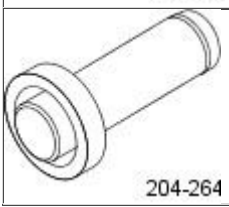	Installer, Oil Seal 204-264

Removal

1. Remove the rear halfshaft. For additional information, refer to Section 205-05 Rear Drive Halfshafts.
2. Using the special tool, remove and discard the axle shaft oil seal.

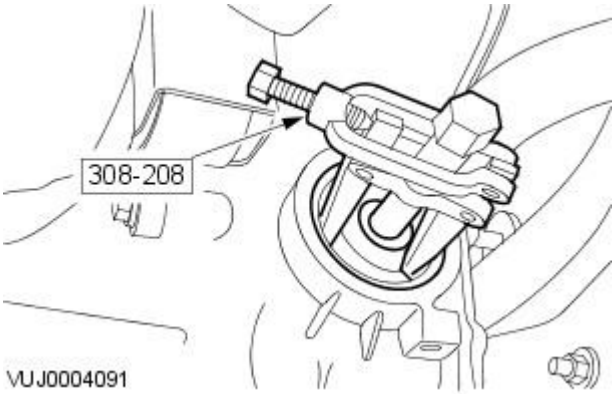

Installation

1. Using the special tool, install the axle shaft oil seal.

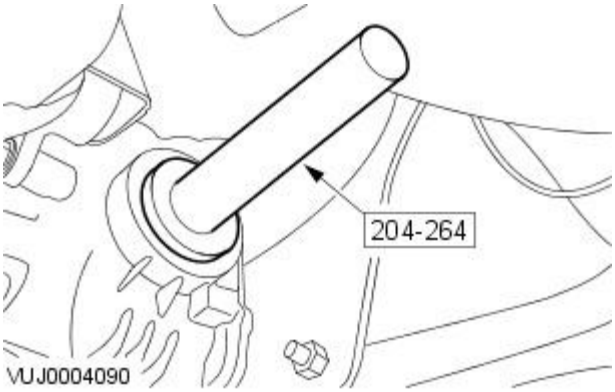

2. Install the halfshaft. For additional information, refer toSection 205-05 Rear Drive Halfshafts.

Rear Drive Axle / Differential - Drive Pinion Flange

In-vehicle Repair

Special Tool(s)	
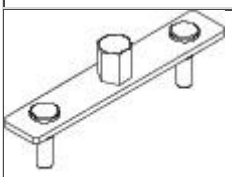 205-518	Torque To Turn Rotary Tool 205-518
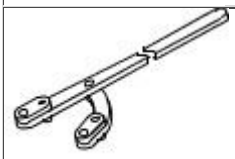 205053	Wrench, Flange 205-053
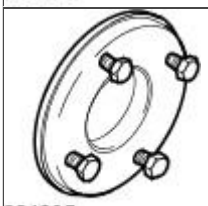 204295	Remover, Flange Plate 204-295
204-266	Remover, Flange Boss 204-266
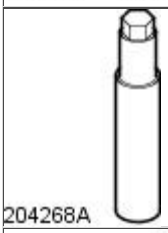 204268A	Remover, Flange Shaft 204-268A
204-264	Installer, Oil Seal 204-264

Removal

1. CAUTION: The following step must be carried out to make sure the correct drive pinion flange retaining nut torque is achieved.

Remove the rear brake pads.
For additional information, refer to: Brake Pads (206-04 Rear Disc Brake, Removal and Installation).

2. Remove the driveshaft.
For additional information, refer to: Driveshaft (205-01 Driveshaft, Removal and Installation).

3. Remove the vibration damper.

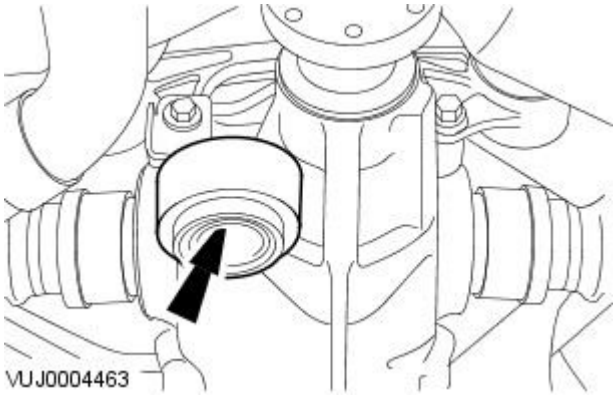

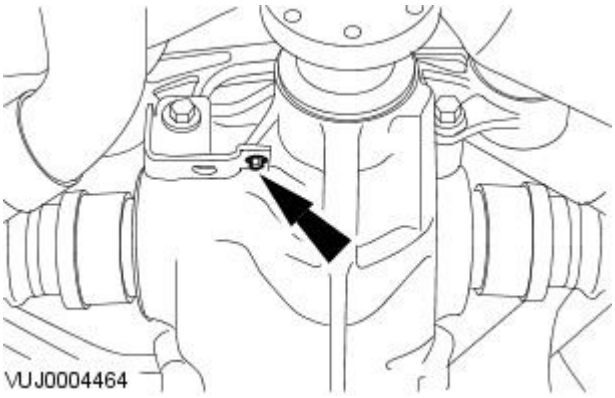

4. Remove the vibration damper retaining bolt.

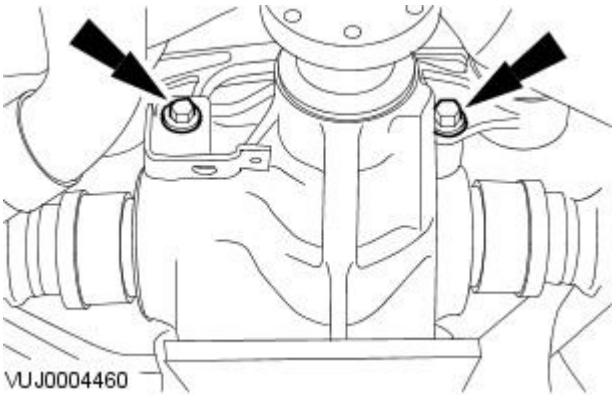

5. NOTE: Support the axle assembly.

Remove the axle front retaining bolts.

- Remove the vibration damper bracket.

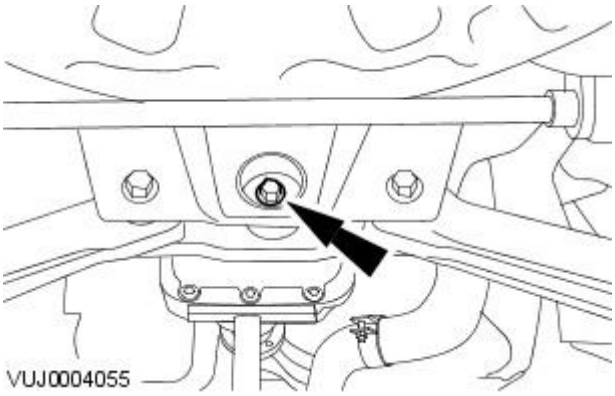

6. Remove the axle assembly rear retaining bolt.

7. CAUTION: Make sure CV joints do not exceed 18 degrees from the center line.

Lower the differential.

8. Install the special tool to the drive pinion flange.

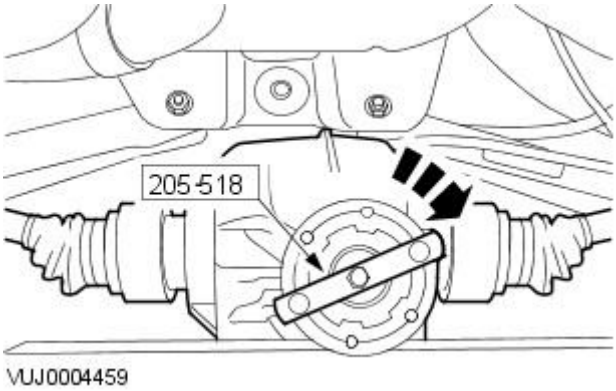

9. Install a Nm (pound/inch) torque wrench on the special tool and record the torque necessary to maintain rotation of the drive pinion gear through several revolutions.

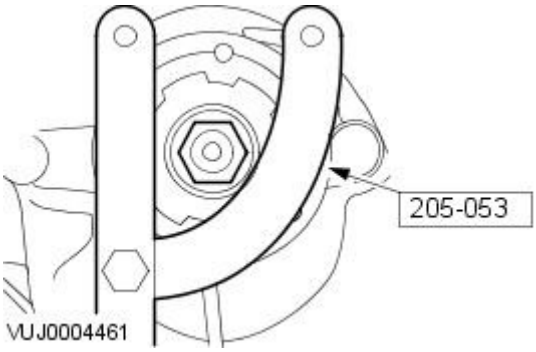

10. Using the special tool, install a breaker bar and remove and discard the drive pinion flange retaining nut.

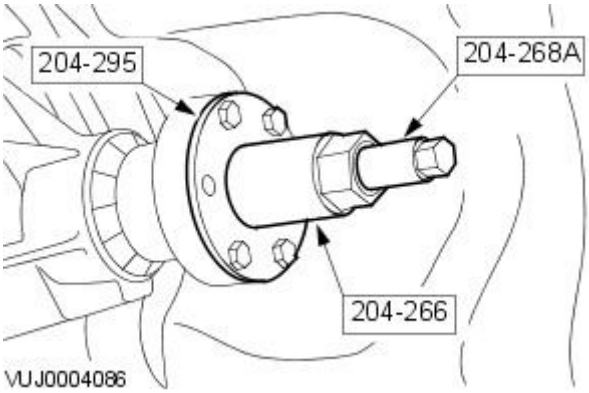

11. NOTE: Mark the pinion flange in relation to the drive pinion stem to ensure correct alignment during installation.

Using the special tools, remove the drive pinion flange.

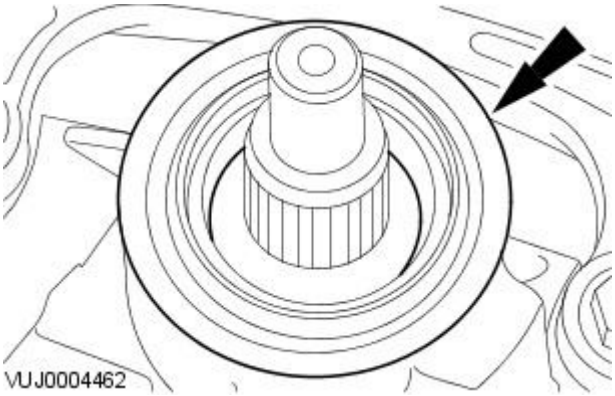

12. Using a suitable tool, remove and discard the drive pinion seal.

Installation

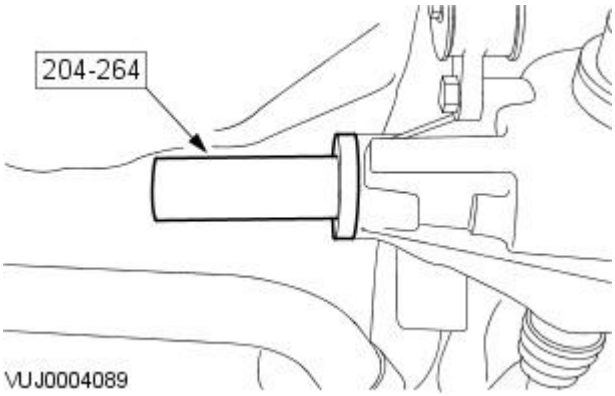

1. CAUTIONS:

Installation without the correct tool can result in early seal failure.

If the drive pinion seal becomes misaligned during installation , remove it and install a new one.

• NOTE: Lubricate the lips of the new drive pinion oil seal. Use a long life grease or equivalent.

Using the special tool, install the drive pinion seal.

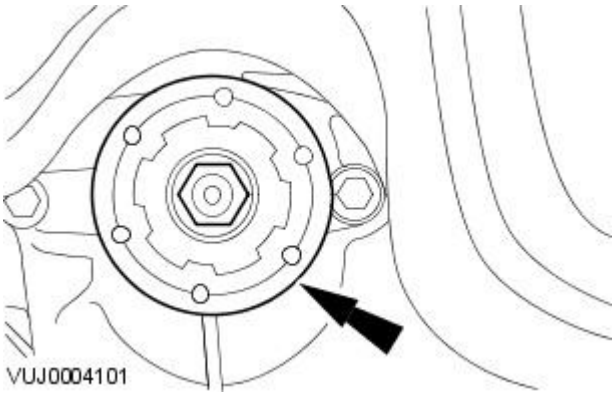

2. CAUTION: Inspect the pinion flange seal journal for rust or nicks/scratches prior to installing the pinion flange. Polish the seal journal with a fine crocus cloth, if required.

Install the drive pinion flange.

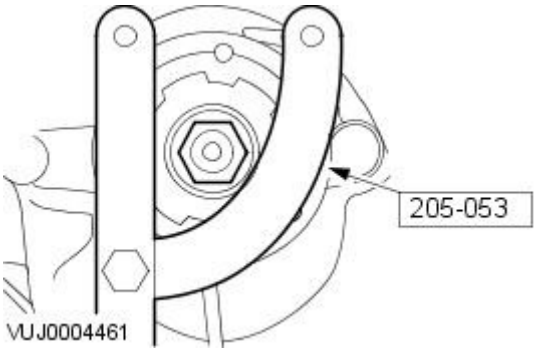

3. CAUTION: Do not under any circumstance, loosen the pinion nut to reduce preload, if preload is exceeded install a new collapsible spacer and pinion nut.

Using the special tool, hold the pinion flange while tightening the drive pinion retaining nut.

4. CAUTION: If the preload recorded prior to disassembly is lower than the specification (1.7 Nm / 15 lb-in) for used bearings, tighten the companion flange nut until the pinion preload reaches the specification (1.7 Nm / 15 lb-in). If the preload recorded prior to disassembly is higher than the specification for used bearings, tighten the companion flange nut to the original reading as recorded.

• NOTE: Rotate the pinion to allow the pinion bearing to seat correctly. Take frequent pinion bearing torque preload measurements by rotating the pinion with a (Nm / lb-in) torque wrench.

Using the special tool, carry out a pinion bearing preload check.

5. Install the axle assembly.

6. Loosely install the axle assembly rear retaining bolt.

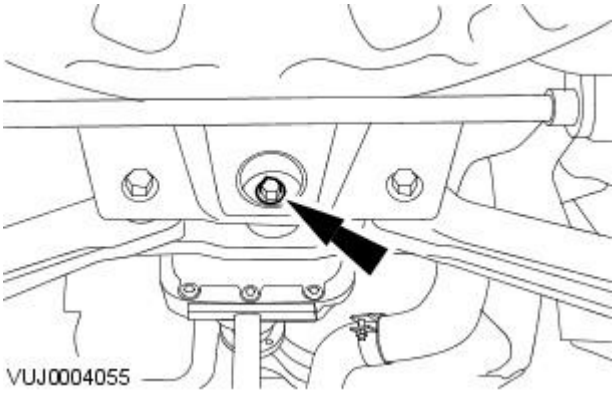

7. Loosely install the axle assembly front retaining bolts.

- Install the vibration damper bracket.

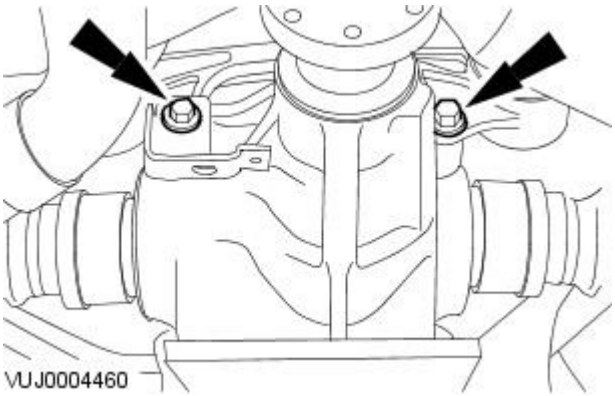

8. Install the vibration damper bracket retaining bolt.

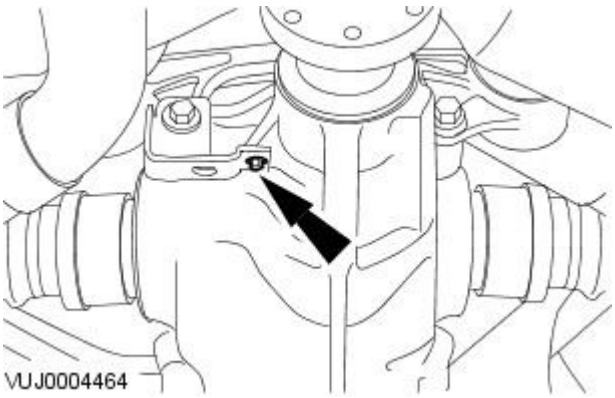

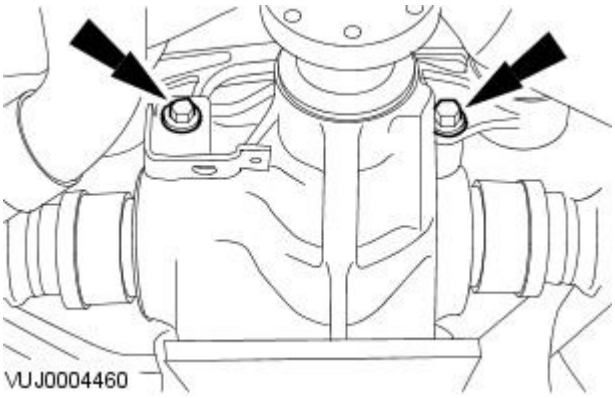

9. Tighten the axle assembly front retaining bolts to 90 Nm.

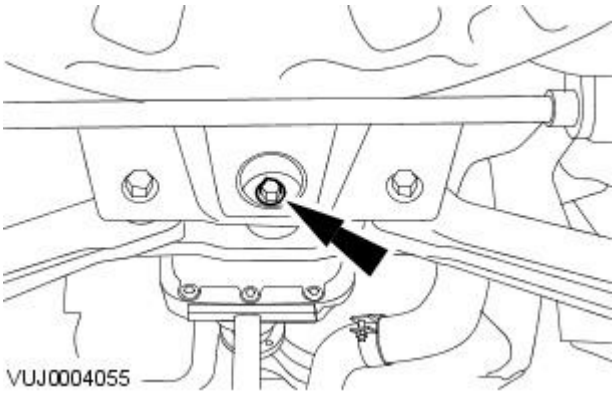

10. Tighten the axle assembly rear retaining bolt to 110 Nm and then slowly tighten to 135 Nm.

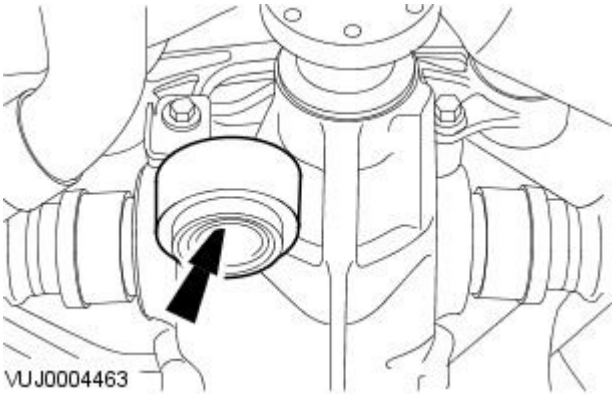

11. Install the vibration damper.

- Tighten to 48 Nm.

12. Install the driveshaft.
For additional information, refer to: Driveshaft (205-01 Driveshaft, Removal and Installation).

13. Install the rear brake pads.
For additional information, refer to: Brake Pads (206-04 Rear Disc Brake, Removal and Installation).

Rear Drive Axle / Differential - Drive Pinion Seal

In-vehicle Repair

Special Tool(s)	
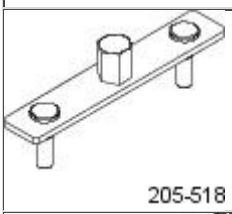 205-518	Torque To Turn Rotary Tool 205-518
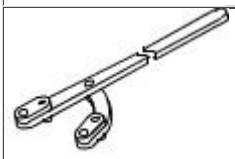 205053	Wrench, Flange 205-053
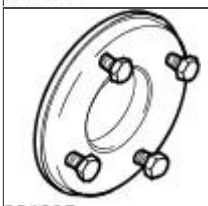 204295	Remover, Flange Plate 204-295
204-266	Remover, Flange Boss 204-266
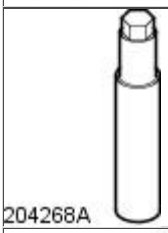 204268A	Remover, Flange Shaft 204-268A
204-264	Installer, Oil Seal 204-264

Removal

1. CAUTION: The following step must be carried out to make sure the correct drive pinion flange retaining nut torque is achieved.

Remove the rear brake pads.
For additional information, refer to: Brake Pads (206-04 Rear Disc Brake, Removal and Installation).

2. Remove the driveshaft.
For additional information, refer to: Driveshaft (205-01, Removal and Installation).

3. Remove the vibration damper.

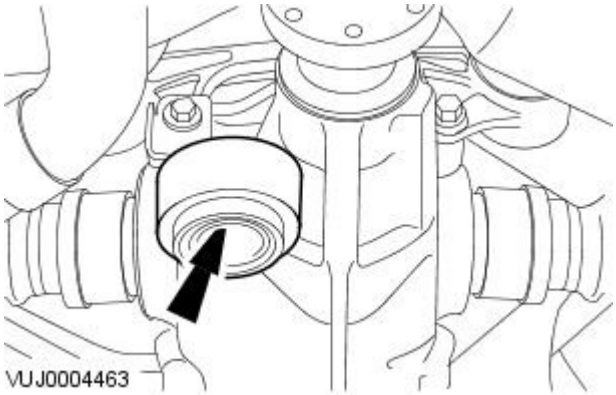

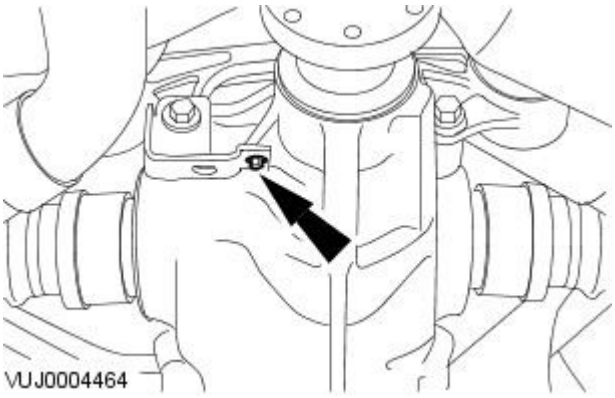

4. Remove the vibration damper retaining bolt.

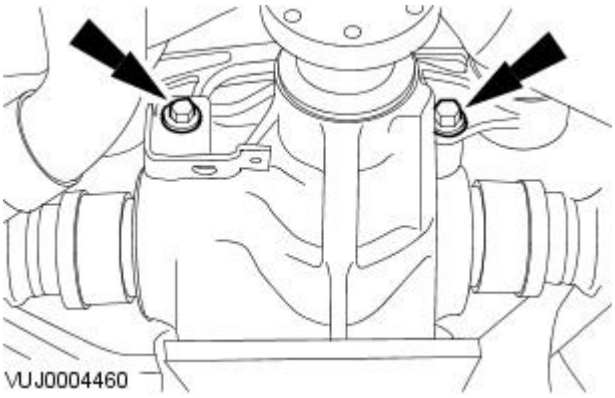

5. NOTE: Support the axle assembly.

Remove the axle front retaining bolts.

- Remove the vibration damper bracket.

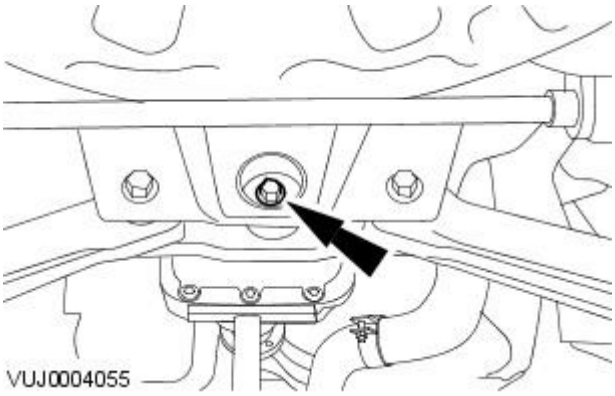

6. Remove the axle assembly rear retaining bolt.

7. CAUTION: Make sure CV joints do not exceed 18 degrees from the center line.

Lower the differential.

8. Install the special tool to the drive pinion flange.

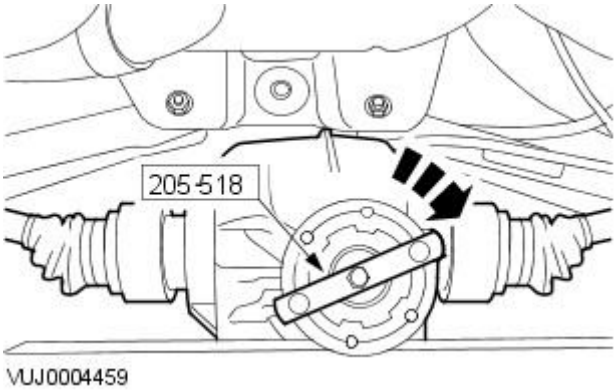

9. Install a Nm (pound/inch) torque wrench on the special tool and record the torque necessary to maintain rotation of the drive pinion gear through several revolutions.

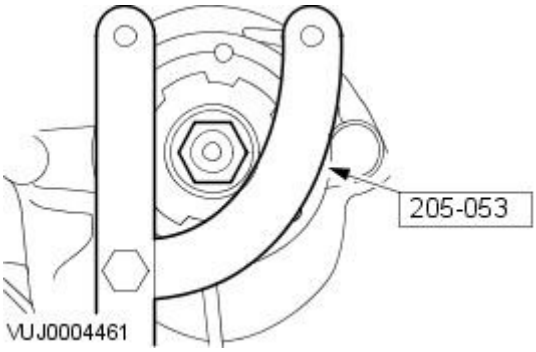

10. Using the special tool, install a breaker bar and remove and discard the drive pinion flange retaining nut.

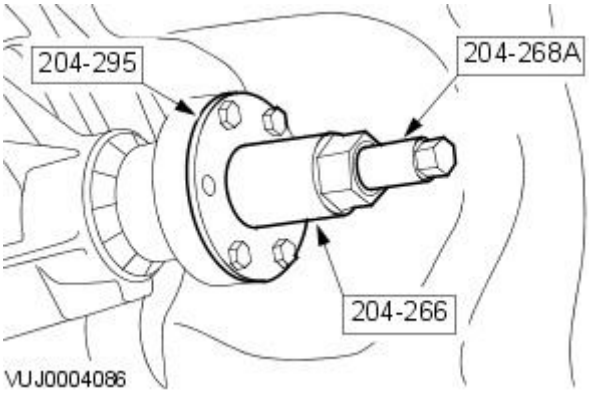

11. NOTE: Mark the pinion flange in relation to the drive pinion stem to ensure correct alignment during installation.

Using the special tools, remove the drive pinion flange.

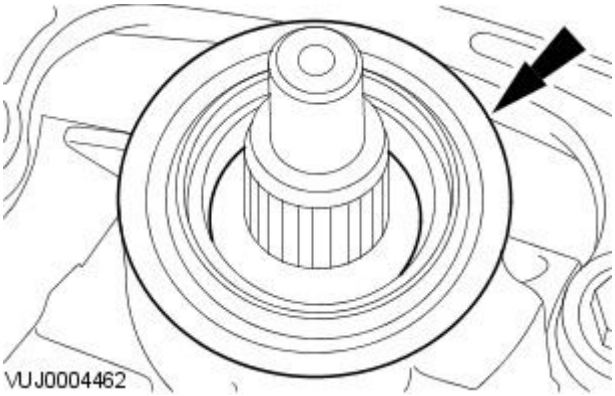

12. Using a suitable tool, remove and discard the drive pinion seal.

Installation

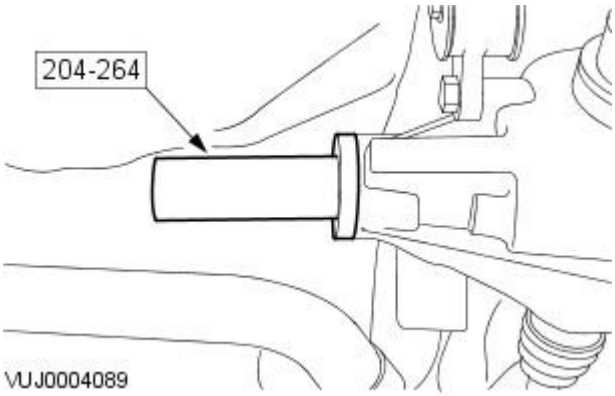

1. CAUTIONS:

Installation without the correct tool can result in early seal failure.

If the drive pinion seal becomes misaligned during installation , remove it and install a new one.

• NOTE: Lubricate the lips of the new drive pinion oil seal. Use a long life grease or equivalent.

Using the special tool, install the drive pinion seal.

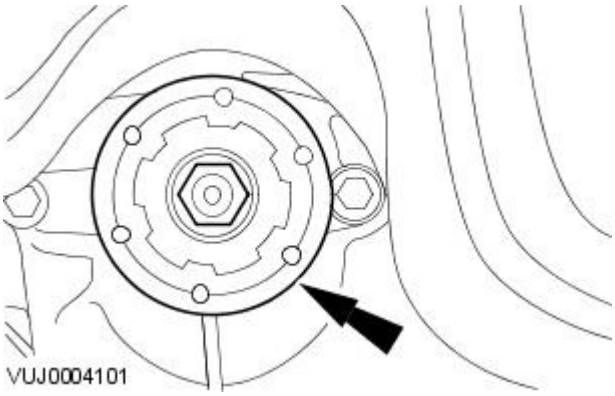

2. CAUTION: Inspect the pinion flange seal journal for rust or nicks/scratches prior to installing the pinion flange. Polish the seal journal with a fine crocus cloth, if required.

Install the drive pinion flange.

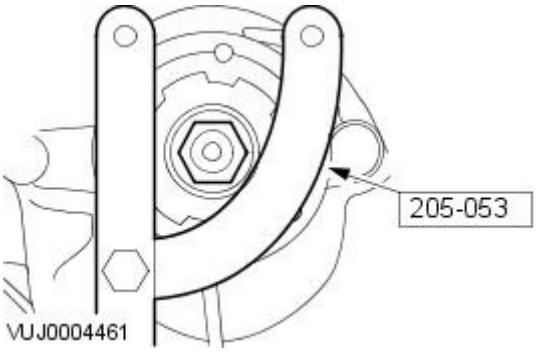

3. CAUTION: Do not under any circumstance, loosen the pinion nut to reduce preload, if preload is exceeded install a new collapsible spacer and pinion nut.

Using the special tool, hold the pinion flange while tightening the drive pinion retaining nut.

4. CAUTION: If the preload recorded prior to disassembly is lower than the specification (1.7 Nm / 15 lb-in) for used bearings, tighten the companion flange nut until the pinion preload reaches the specification (1.7 Nm / 15 lb-in). If the preload recorded prior to disassembly is higher than the specification for used bearings, tighten the companion flange nut to the original reading as recorded.

• NOTE: Rotate the pinion to allow the pinion bearing to seat correctly. Take frequent pinion bearing torque preload measurements by rotating the pinion with a (Nm / lb-in) torque wrench.

Using the special tool, carry out a pinion bearing preload check.

5. Install the axle assembly.

6. Loosely install the axle assembly rear retaining bolt.

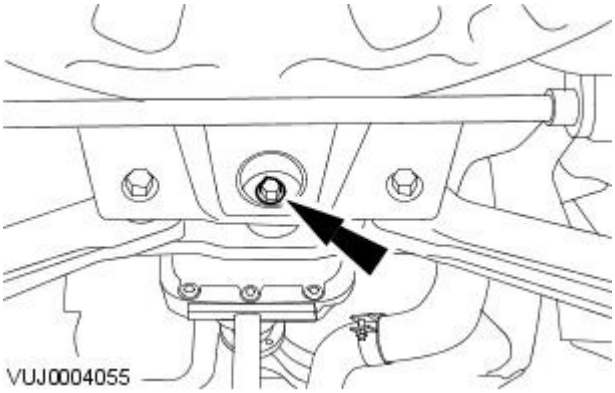

7. Loosely install the axle assembly front retaining bolts.

- Install the vibration damper bracket.

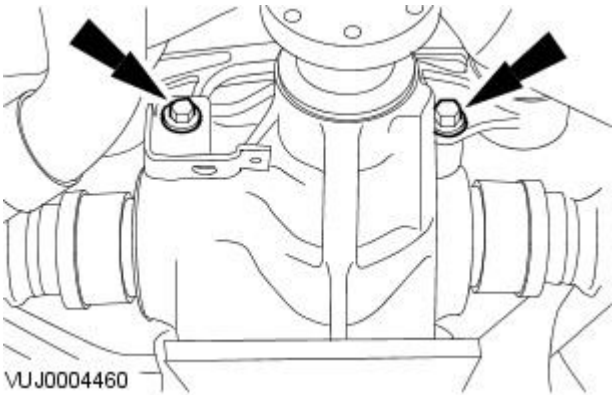

8. Install the vibration damper bracket retaining bolt.

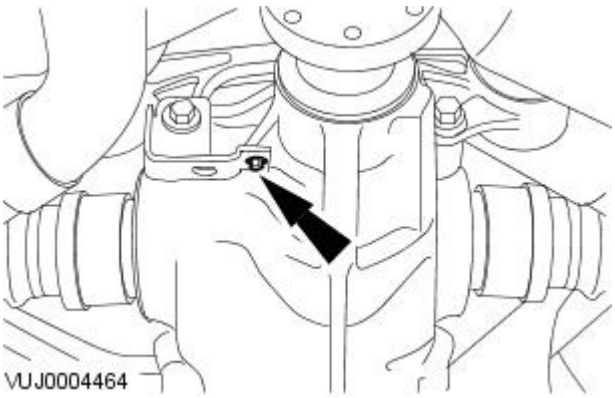

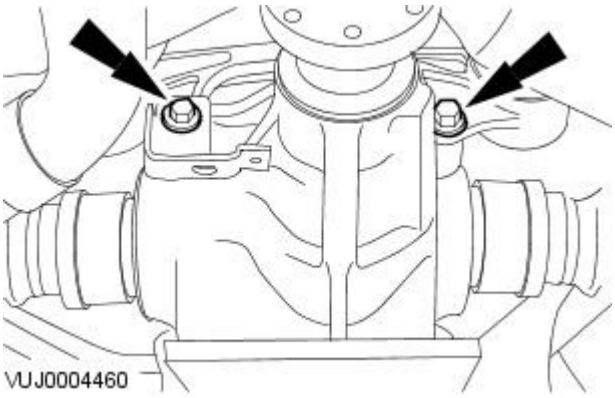

9. Tighten the axle assembly front retaining bolts to 90 Nm.

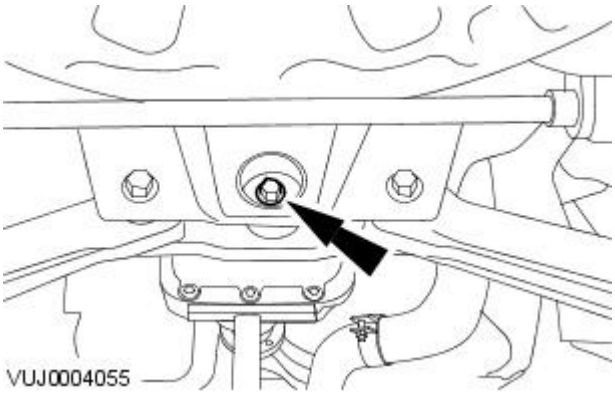

10. Tighten the axle assembly rear retaining bolt to 110 Nm and then slowly tighten to 135 Nm.

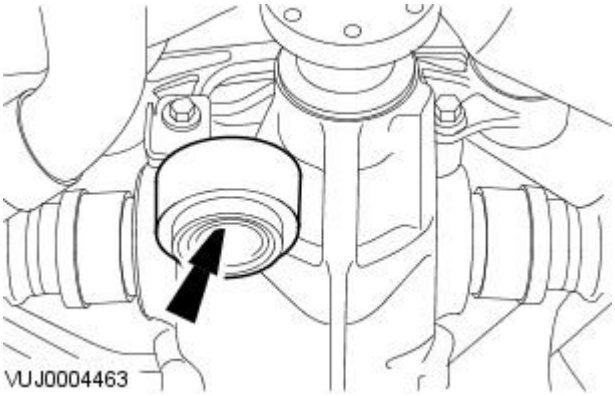

11. Install the vibration damper.

- Tighten to 48 Nm.

12. Install the driveshaft.
For additional information, refer to: Driveshaft (205-01, Removal and Installation).

13. Install the rear brake pads.
For additional information, refer to: Brake Pads (206-04 Rear Disc Brake, Removal and Installation).

Rear Drive Axle / Differential - Axle Assembly

Removal and Installation

Removal

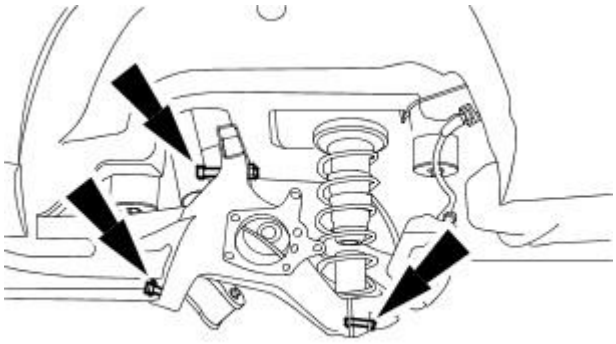

VUJ0004053

1. Remove the left-hand rear halfshaft.
   For additional information, refer to: Rear Halfshaft (205-05 Rear Drive Halfshafts, Removal and Installation).
2. Loosely install the rear wheel knuckle retaining bolts.

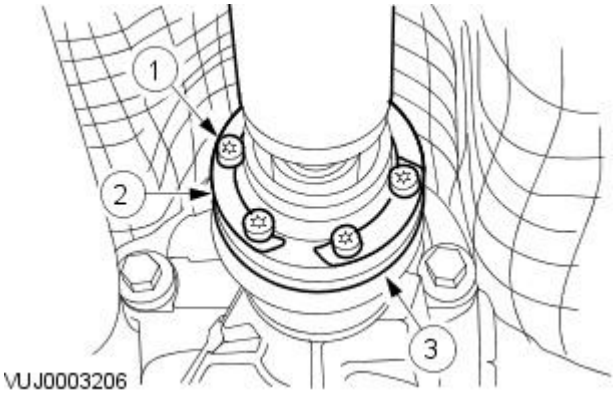

VUJ0003206

3. CAUTION: Support the driveshaft front and rear sections. Failure to follow this instruction may result in damage to the vehicle.

   Detach the driveshaft front universal joint.

   1. Remove and discard the driveshaft front universal joint retaining bolts.
   2. Remove and discard the driveshaft retaining bolts link washers.
   3. Detach the driveshaft front universal joint.
      1. Remove and discard the gasket.

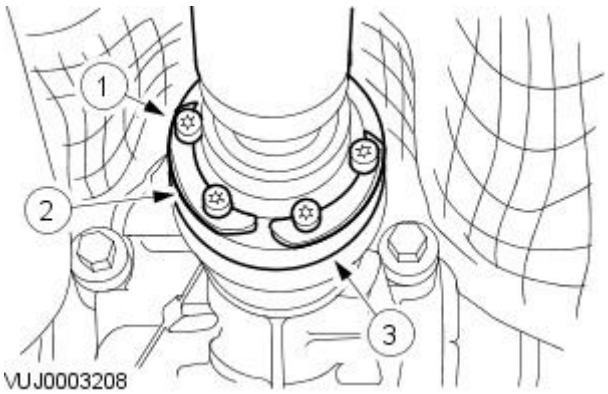

VUJ0003208

4. Detach the driveshaft rear universal joint.
   1. Remove and discard the driveshaft rear universal joint retaining bolts.
   2. Remove and discard the driveshaft retaining bolts link washers.
   3. Detach the driveshaft rear universal joint.
      1. Remove and discard the gasket.

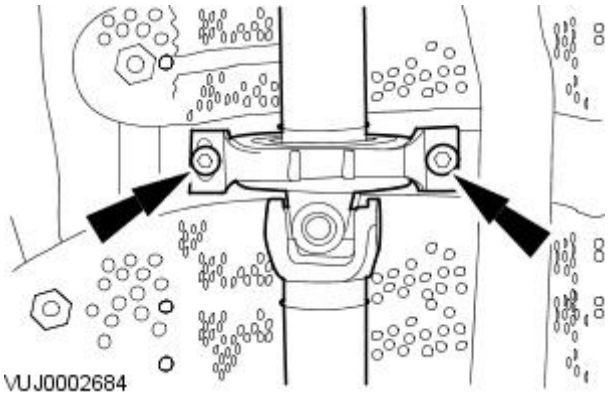

VUJ0002684

5. CAUTION: Support the driveshaft front and rear sections.

   Remove the driveshaft.

   - Discard the retaining bolts.

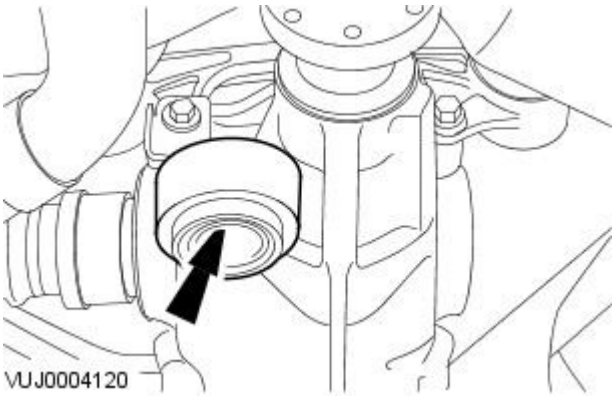

6. Remove the vibration damper.

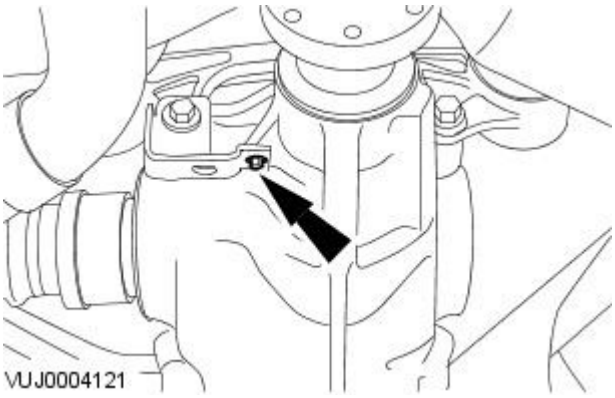

7. Remove the vibration damper bracket retaining bolt.

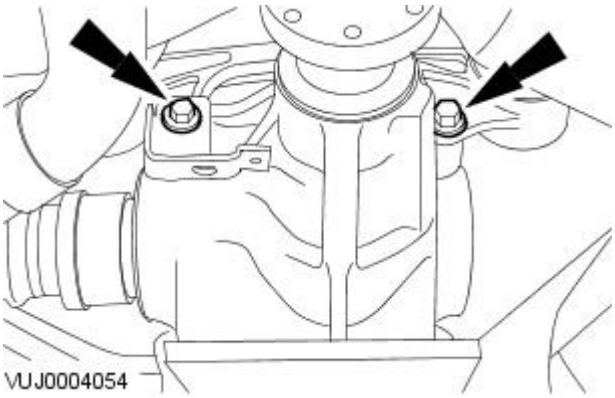

8. NOTE: Support the axle assembly.

Remove the axle assembly front retaining bolts.

- Remove the vibration damper bracket.

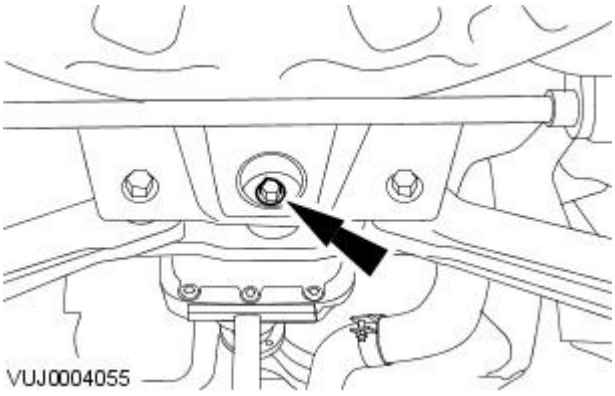

9. Remove and discard the axle assembly rear retaining bolt and lower the axle assembly.

- Remove and Discard the axle assembly washer.

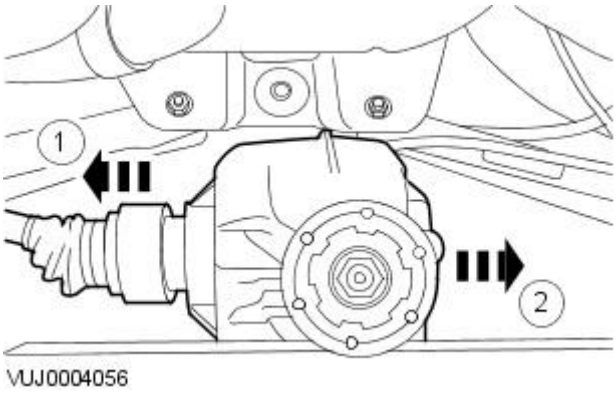

10. NOTE: The halfshaft is retained in the differential by a spring clip.

Remove the axle assembly.

1. Using a suitable pry tool detach the rear halfshaft.
2. Remove the axle assembly.

Installation

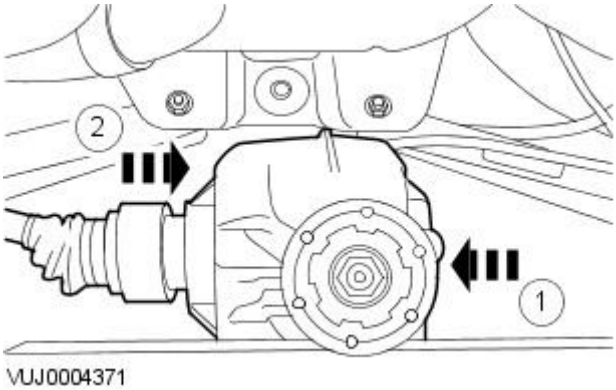

1. NOTE: Support the axle assembly.

• NOTE: When installing the halfshaft make sure the spring clip is fully engaged in the differential.

Install the axle assembly.

1. Install the axle assembly.
2. Install the halfshaft into the axle assembly.

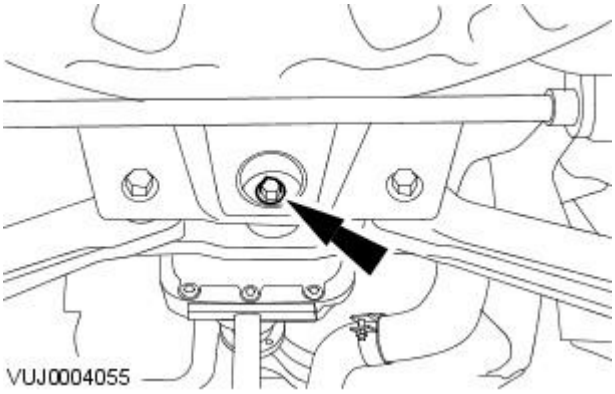

2. NOTE: Install a new axle assembly washer.

Loosely install new axle assembly rear retaining bolt.

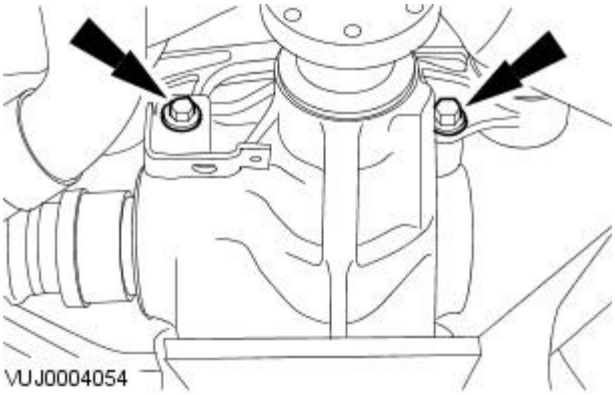

3. Loosely install the axle assembly front retaining bolts.

- Install the vibration damper bracket.

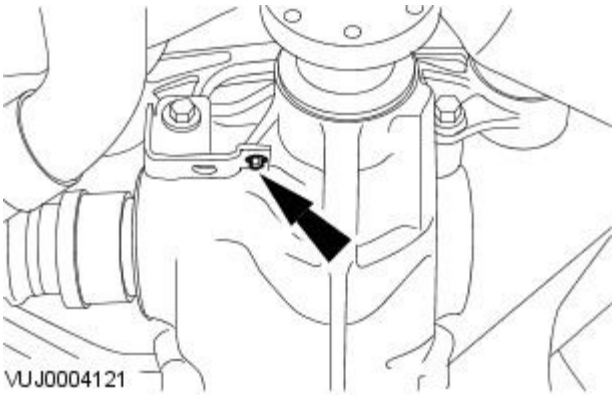

4. Install the vibration damper bracket retaining bolt.

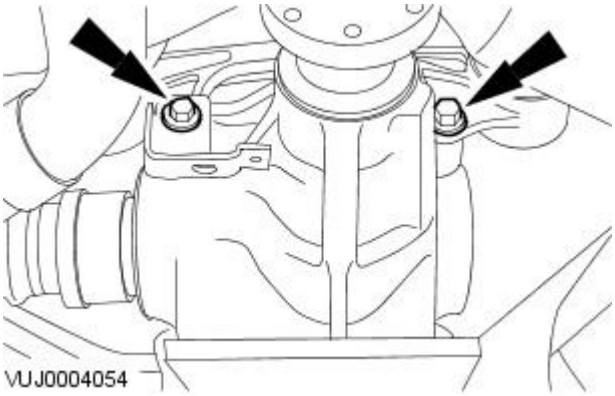

5. Tighten to 90 Nm.

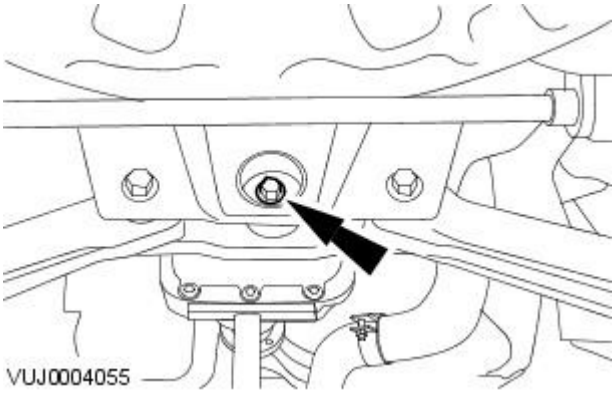

6. Tighten to 150 Nm.

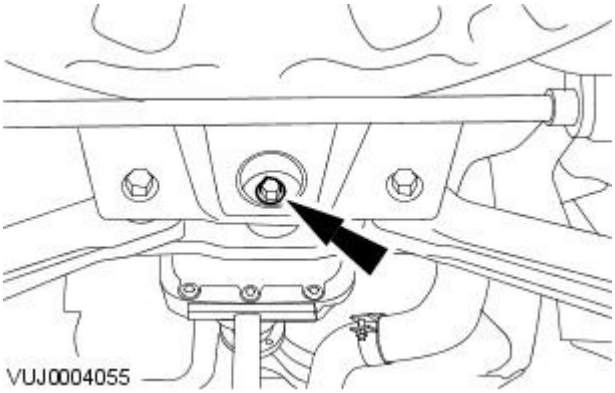

7. CAUTION: Slowly tighten the axle retaining bolt to final torque. Failure to follow this instruction may result in damage to the vehicle.

Tighten to 150 Nm. If you are refitting an old fixing (before VIN J24258), tighten to 135 Nm.

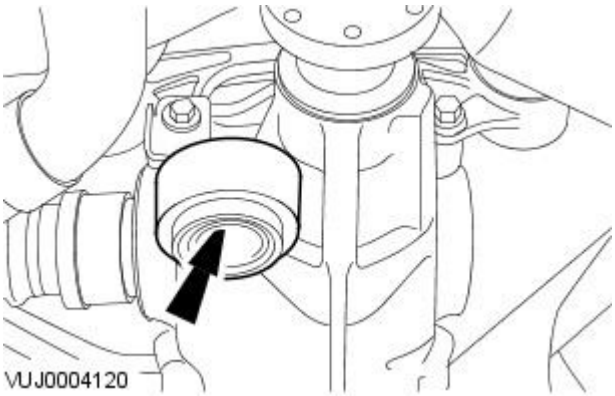

8. Tighten to 40 Nm.

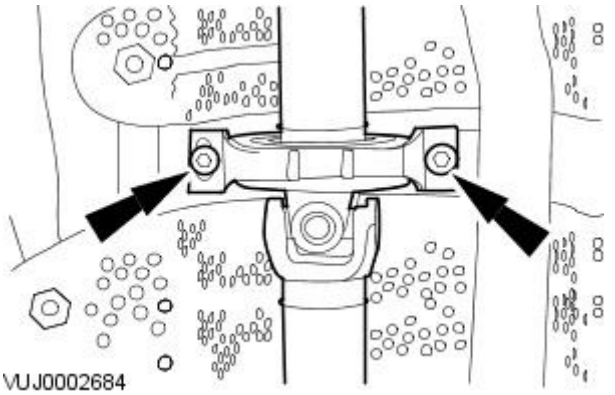

9. CAUTION: Support the driveshaft front and rear sections.

Loosely install the driveshaft center bearing retaining bolts.

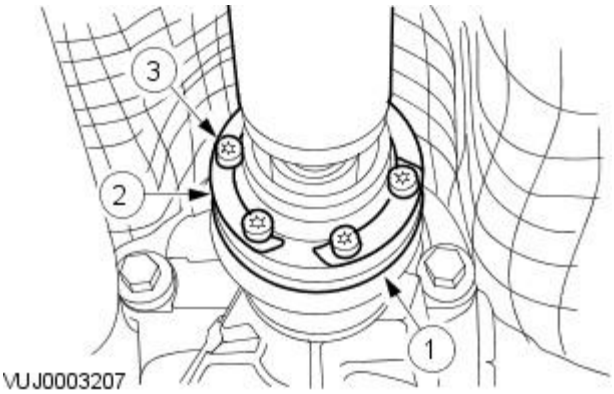

10. Attach the driveshaft front universal joint.

1. Install a new gasket.
2. Install new driveshaft retaining bolts link washers.
3. Install new driveshaft retaining bolts.
    1. Tighten to 40 Nm.

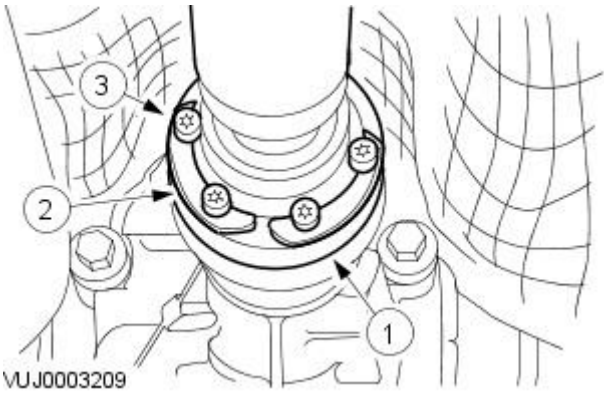

11. Attach the driveshaft rear universal joint.

1. Install a new gasket.
2. Install new driveshaft retaining bolt link washers.
3. Install new driveshaft retaining bolts.
    1. Tighten to 40 Nm.

12. Carry out the under body misalignment check.
For additional information, refer to: Underbody Misalignment Check (502-00 Uni-Body, Subframe and Mounting System, General Procedures).

13. Tighten to 25 Nm.

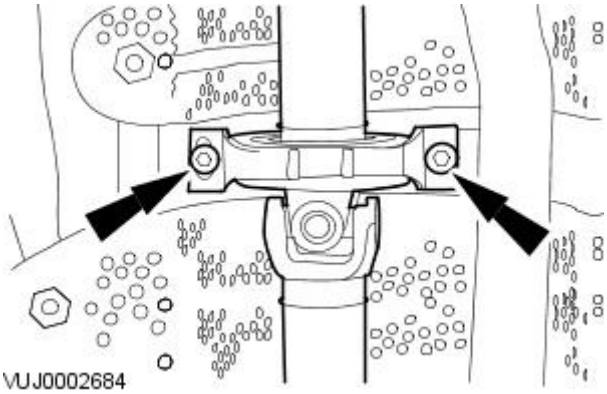

14. Remove the rear wheel knuckle retaining bolts.

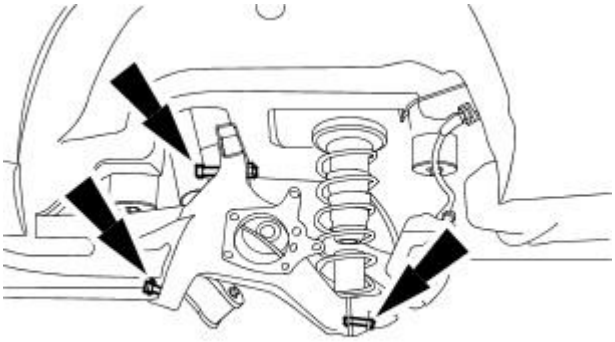

15. Install the left-hand rear halfshaft.
For additional information, refer to: Rear Halfshaft (205-05 Rear Drive Halfshafts, Removal and Installation).

Published: 11-May-2011

Front Drive Halfshafts -

Torque Specifications

Description	Nm	lb-ft	lb-in
Wheel hub nut	270	200	-
Tie rod end retaining nut	35	26	-
Lower arm ball joint retaining nut	83	61	-
Front subframe reinforcement plate retaining bolt	35	26	-
Front subframe rear mount retaining bolt	142	105	-
Front subframe front mount retaining bolt	142	105	-
Transfer case Y bracket retaining bolt	25	18	-
Intermediate shaft bearing carrier retaining bolts	25	18	-
Front right-hand halfshaft retaining nuts - Vehicles with 2.0L or diesel engine	25	18	-

Front Drive Halfshafts - Front Drive Halfshafts

Description and Operation

Front Drive Halfshafts

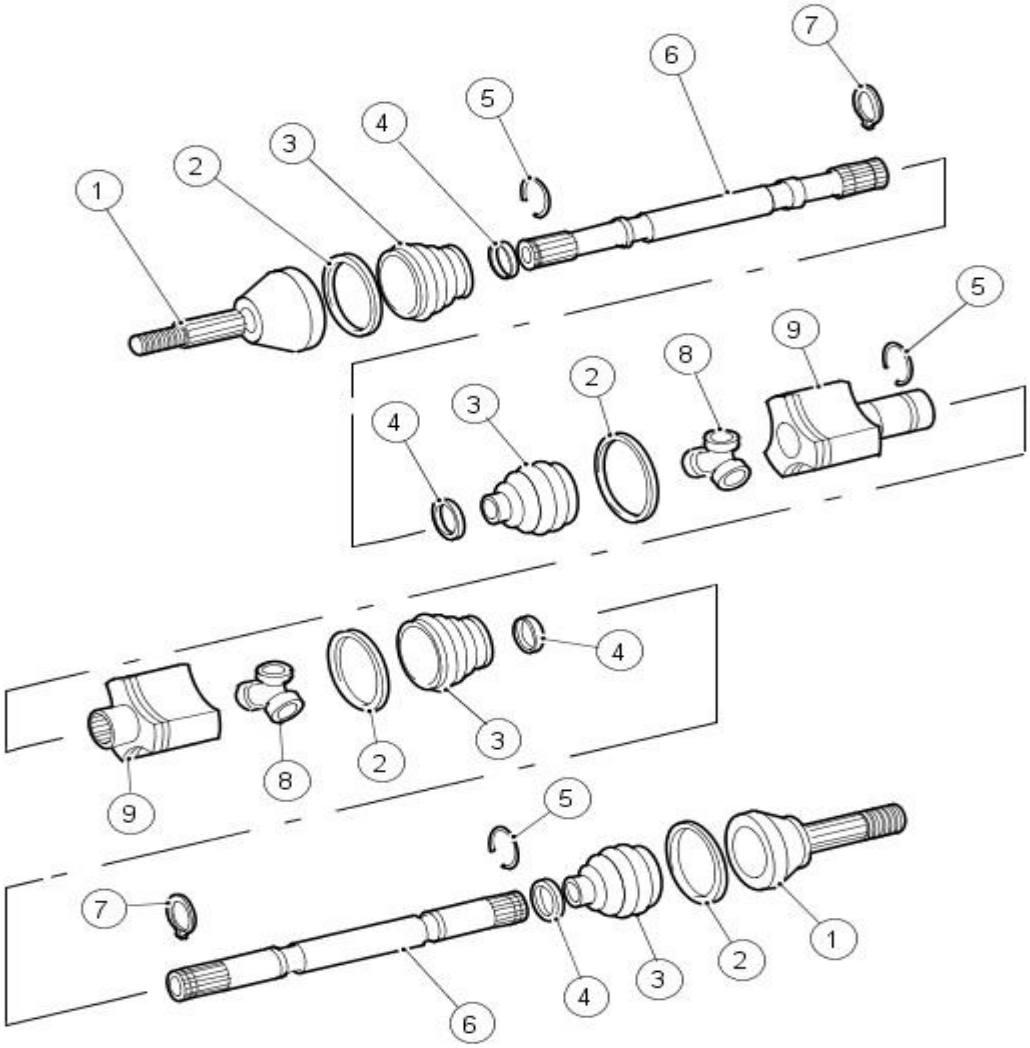

VUJ0005086

Item	Part Number	Description
1	—	Outer constant velocity (CV) joint
2	—	CV joint boot retaining clip
3	—	CV joint boot
4	—	CV joint boot retaining clip
5	—	Snap ring
6	—	Barshaft
7	—	Circlip
8	—	Tripod star
9	—	Tripod star housing

The front drive halfshafts are of equal lengths with the inner constant velocity (CV) joint being of the plunger type.

The inner and outer CV joints are linked by a solid barshaft. The inner CV joints are retained in the differential with the aid of a spring clip.

On vehicles with 2.0L or diesel engines there is an addition of an intermediate shaft which connects the right-hand side of the differential with the right-hand halfshaft. The right-hand halfshaft is retained in the intermediate shaft with the aid of a spring circlip. The intermediate shaft is supported by an additional bearing which is fitted to the outer end of the intermediate shaft and is attached to the right-hand catalytic converter retaining bracket.

Handling Front Drive Halfshafts

The following points should be observed when handling front drive halfshafts:

- Do not pull on the CV joints.
- Do not allow the CV joints to exceed 18 degrees of articulation.
- Check polished surfaces and splines for damage.
- Do not allow the CV joint boots to come into contact with sharp edges, hot vehicle components or the exhaust system.
- Do not drop the front drive halfshafts, this may cause damage to the interior of the boots which may not be visible.
- Do not support the front drive halfshaft by holding the CV joint alone.

Underbody Protection and Corrosion Prevention

The CV joint boots should be covered during application of underbody protection or corrosion prevention. Foreign matter on the CV boots may cause premature ageing of the material. Foreign material on the front drive halfshafts may cause imbalance.

Published: 11-May-2011

Front Drive Halfshafts - Front Drive Halfshafts

Diagnosis and Testing

For additional information, refer to Section 205-00 Driveline System - General Information.

Front Drive Halfshafts - Front Halfshaft LH

Removal and Installation

Special Tool(s)	
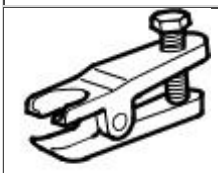 204-192	Ball joint splitter 204-192
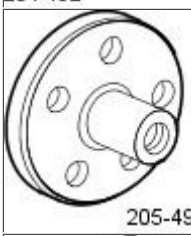 205-491	Wheel hub puller 205-491
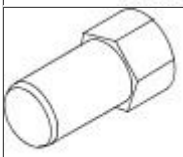 20549101	Adapter nuts 205-491-01
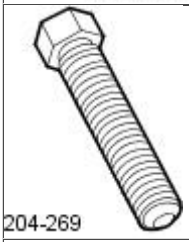 204-269	Forcing screw 204-269
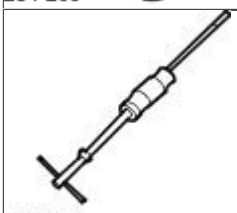 100012	Slide hammer 100-012
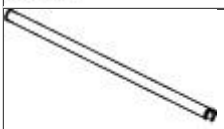 100-012-02	100-012-02 Slide hammer shaft
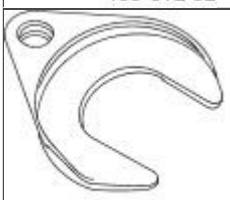 204-226	Halfshaft remover fork 204-226

Removal

All vehicles

1. Loosen the wheel hub nut.

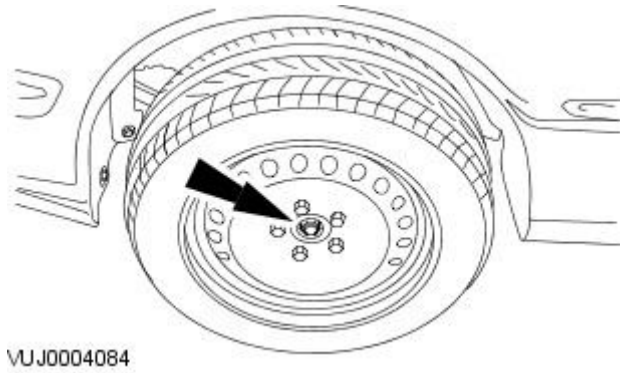

VUJ0004084

2. Remove the front road wheel and tire.
   For additional information, refer to: Wheel and Tire (204-04 Wheels and Tires, Removal and Installation).
3. Remove the tie rod end retaining nut.

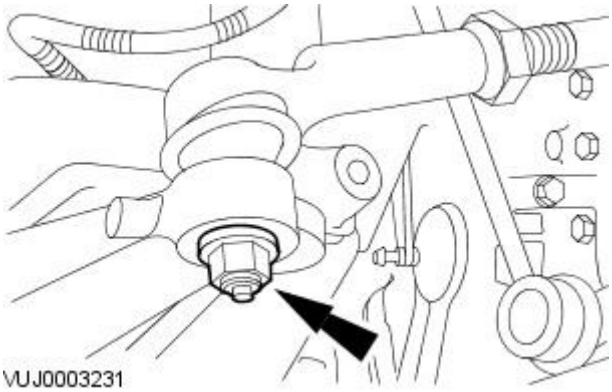

4. Using the special tool detach the tie rod end.

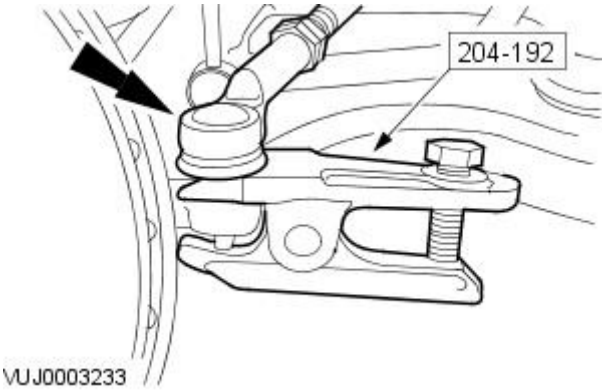

5. Remove the subframe reinforcement plate retaining bolts.

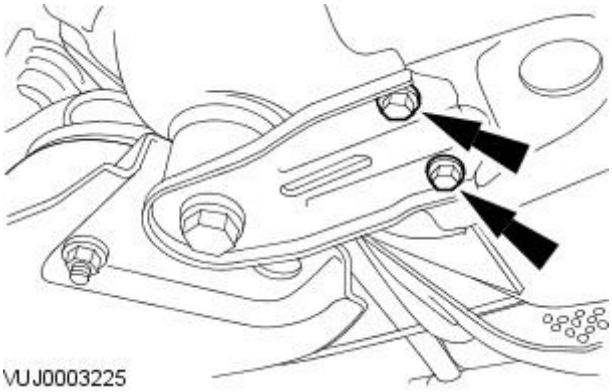

6. Loosen the subframe rear mount retaining bolt.

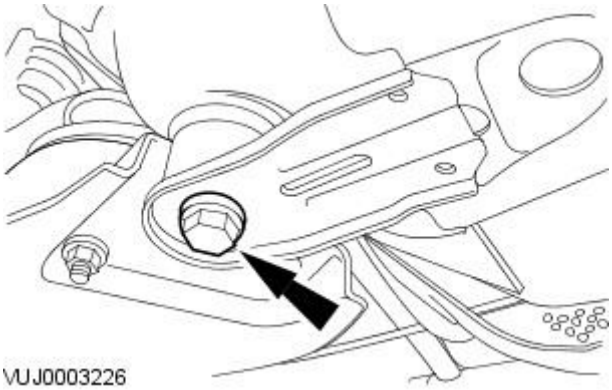

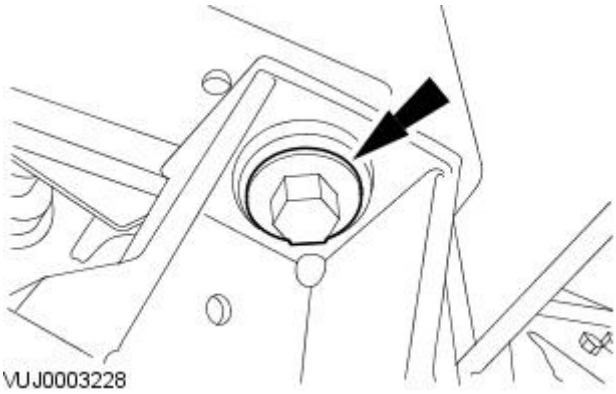

7. Loosen the subframe front mount retaining bolt.

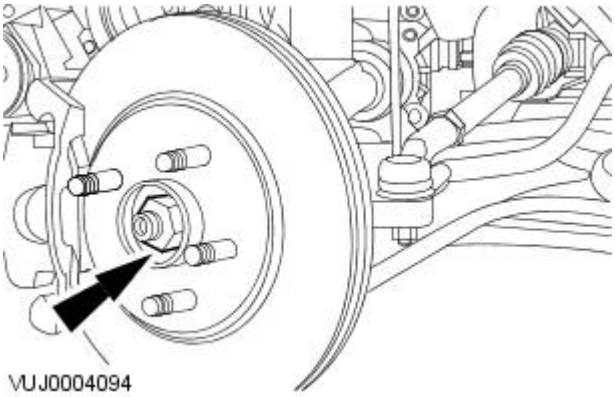

8. Remove and discard the wheel hub nut.

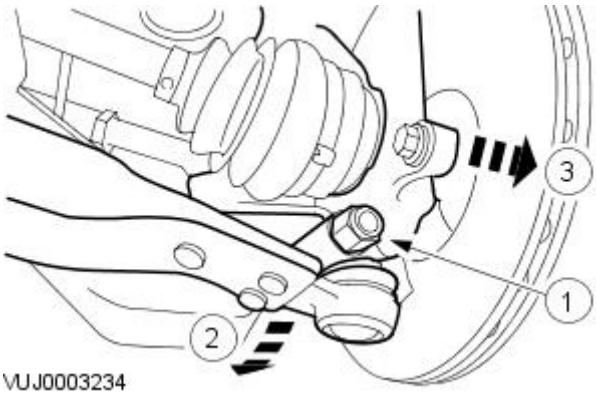

9. Detach the wheel knuckle.

1. Remove the lower arm ball joint retaining bolt.
2. Reposition the lower arm.
3. Detach the wheel knuckle.

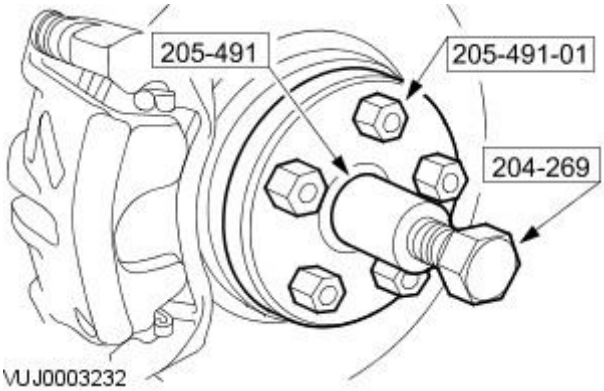

10. Using the special tools, detach the halfshaft.

Vehicle with automatic transmission

11. Drain the automatic transmission fluid.
For additional information, refer to: Transmission Fluid Drain and Refill (307-01B Automatic Transmission/Transaxle - Vehicles With: 6-Speed Automatic Transaxle - AWF21, General Procedures).

Vehicles with manual transmission

12. Drain the manual transmission fluid.
For additional information, refer to: Transaxle Draining and Filling - Vehicles With: 6-Speed Manual Transaxle - MMT6 (308-03 Manual Transmission/Transaxle, General Procedures).

All vehicles

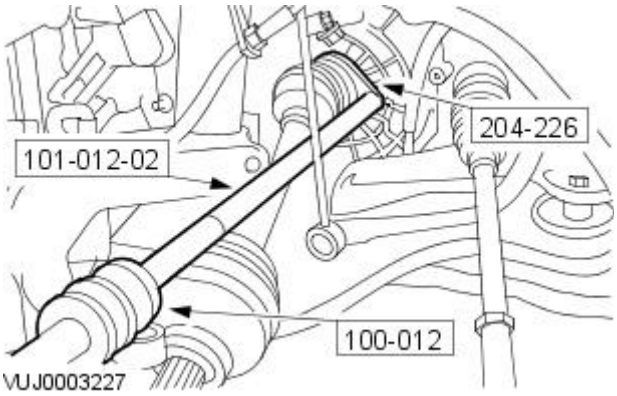

13. Using the special tools, remove the halfshaft.

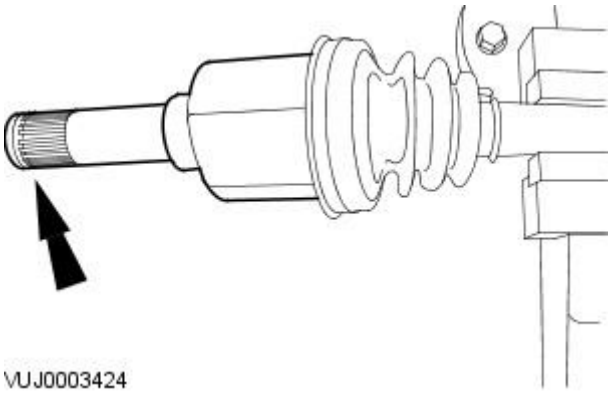

14. CAUTION: Use suitable protective covers to protect the barshaft.

Remove the halfshaft snap ring.

Installation

All vehicles

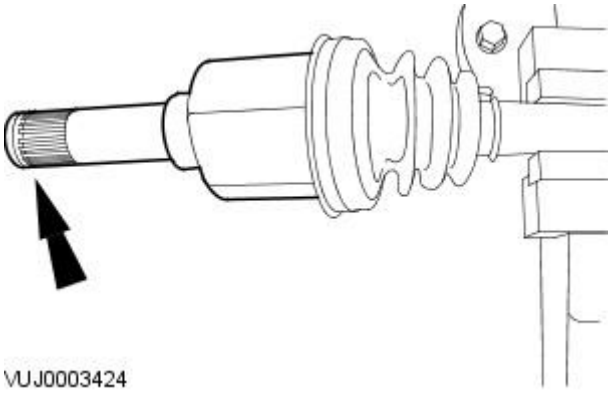

1. Install a new snap ring to the halfshaft.

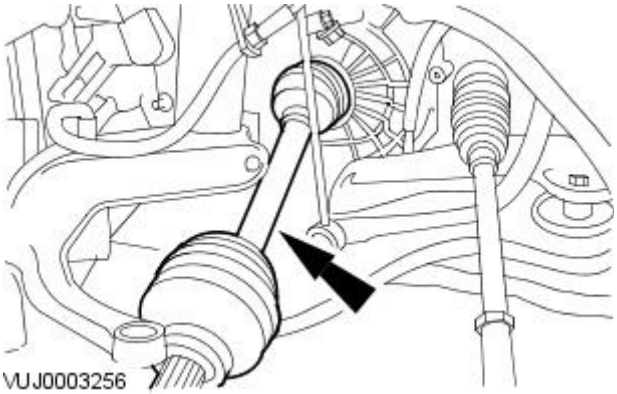

2. CAUTION: Make sure the CV joint splines are located fully. Do not use excessive force when engaging the CV joint into the transmission.

Install the halfshaft.

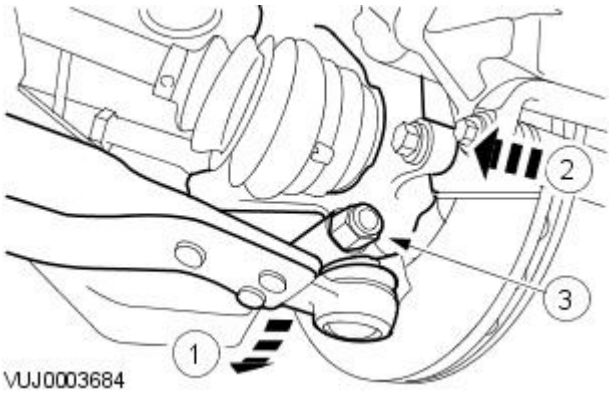

3. Attach the wheel knuckle.

1. Reposition the lower arm.
2. Attach the wheel knuckle.
3. Install the lower arm ball joint retaining bolt.

- Tighten to 83 Nm.

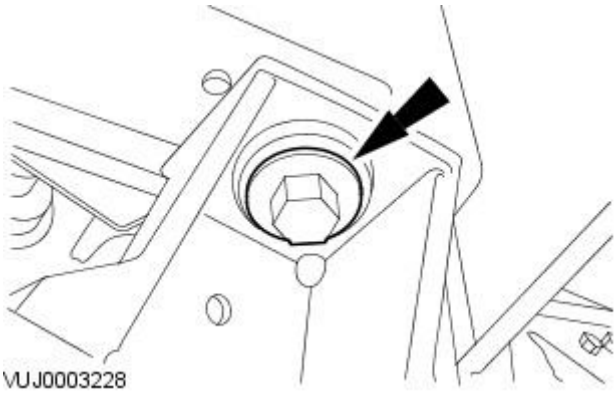

4. Tighten the front subframe front mount retaining bolt.

- Tighten to 142 Nm.

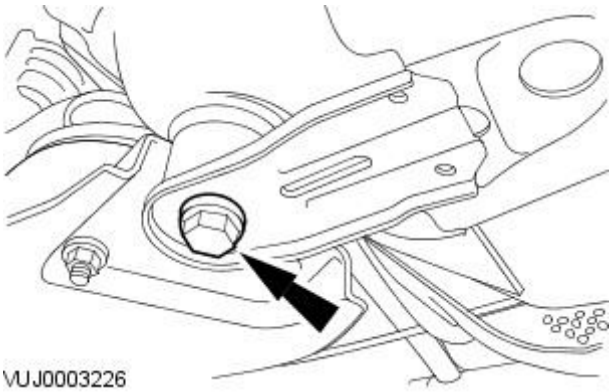

5. Loosely install the subframe rear mount retaining bolt.

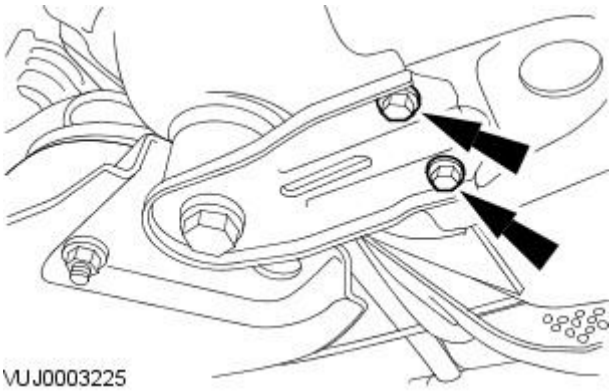

6. Install the subframe reinforcement plate retaining bolts.

- Tighten to 35 Nm.

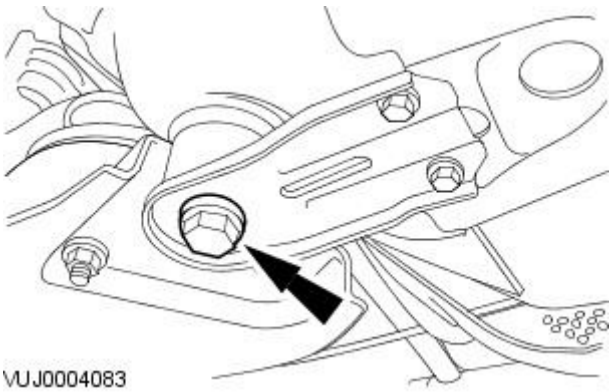

7. Tighten to 142 Nm.

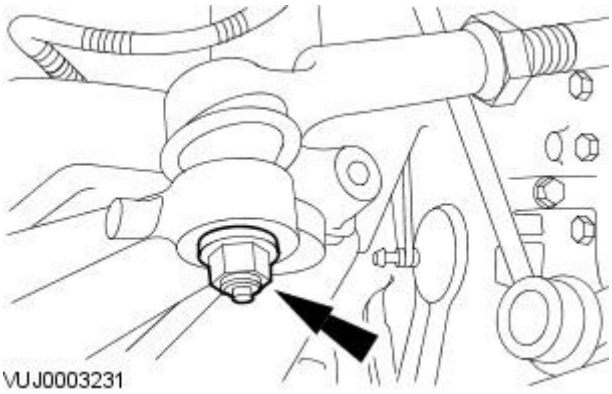

8. Install the tie rod end.

- Tighten to 35 Nm.

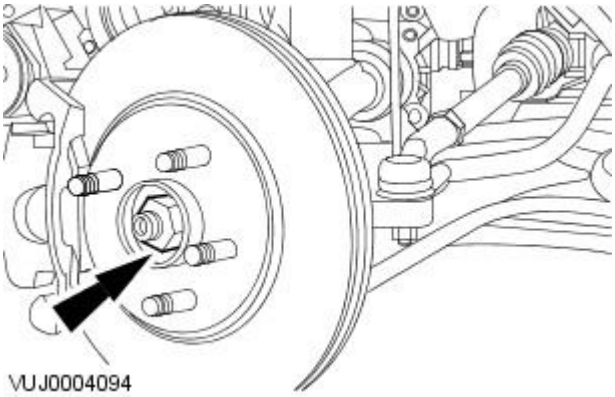

9. Loosely install a new wheel hub nut.

10. Install the front road wheel and tire.
For additional information, refer to: Wheel and Tire (204-04 Wheels and Tires, Removal and Installation).

Vehicle with automatic transmission

11. Refill the automatic transmission system.
For additional information, refer to: Transmission Fluid Drain and Refill (307-01B Automatic Transmission/Transaxle - Vehicles With: 6-Speed Automatic Transaxle - AWF21, General Procedures).

Vehicles with manual transmission

12. Refill the manual transmission system.
For additional information, refer to: Transaxle Draining and Filling - Vehicles With: 6-Speed Manual Transaxle - MMT6 (308-03 Manual Transmission/Transaxle, General Procedures).

13. Tighten the wheel hub nut.

- Tighten to 270 Nm.

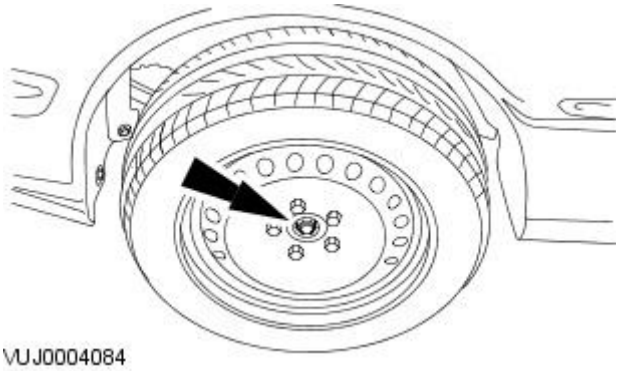

14. Check the subframe alignment.
For additional information, refer to: Underbody Misalignment Check (502-00 Uni-Body, Subframe and Mounting System, General Procedures).

Front Drive Halfshafts - Front Halfshaft RH2.0L NA V6 - AJV6 / 2.5L NA V6 - AJV6 / 3.0L NA V6 - AJ27

Removal and Installation

Special Tool(s)	
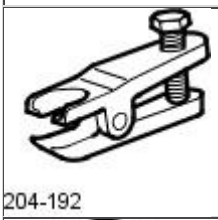 204-192	Ball joint splitter 204-192
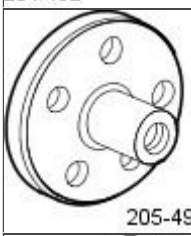 205-491	Wheel hub puller 205-491
20549101	Adapter nuts 205-491-01
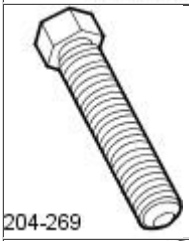 204-269	Forcing screw 204-269
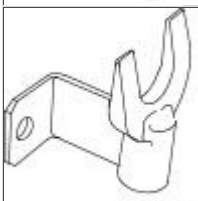 307-442	RH halfshaft splitter 307-442
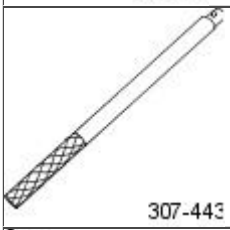 307-443	RH halfshaft splitter handle 307-443
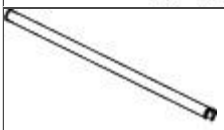 100-012-02	Slide hammer shaft 100-012-02
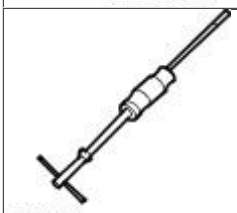 100012	Slide hammer 100-012
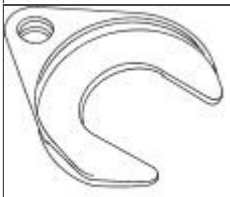 204-226	Halfshaft remover fork 204-226

Removal

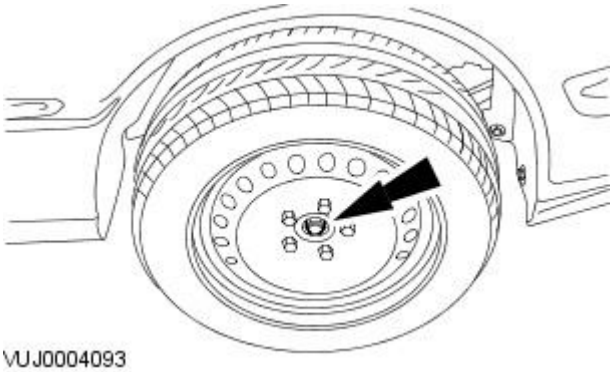

1. Loosen the wheel hub nut.

2. Remove the front road wheel and tire.
   For additional information, refer to: Wheel and Tire (204-04 Wheels and Tires, Removal and Installation).

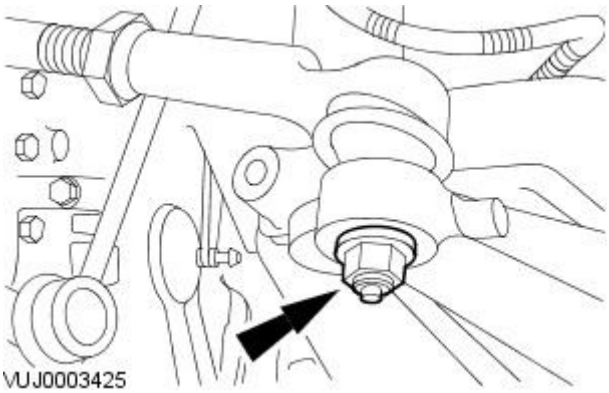

3. Remove the tie rod-end retaining nut.

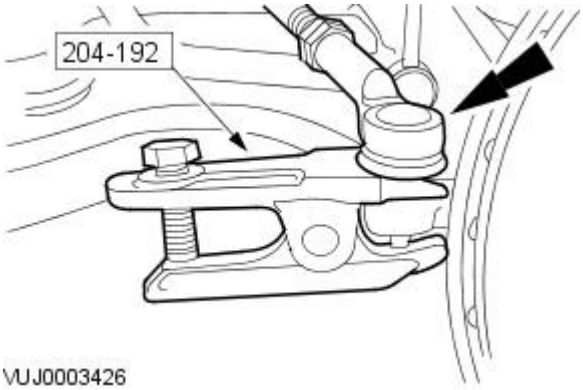

4. Using the special tool, detach the tie-rod end.

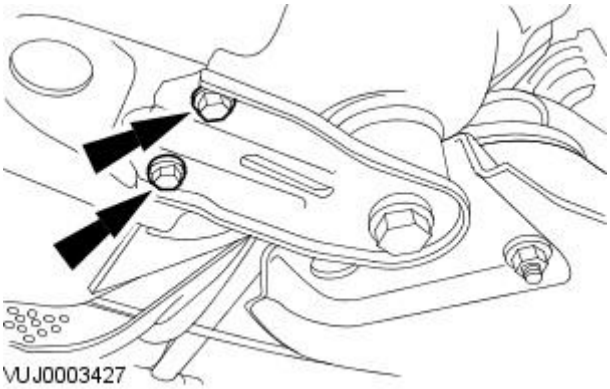

5. Remove the subframe reinforcement plate retaining bolts.

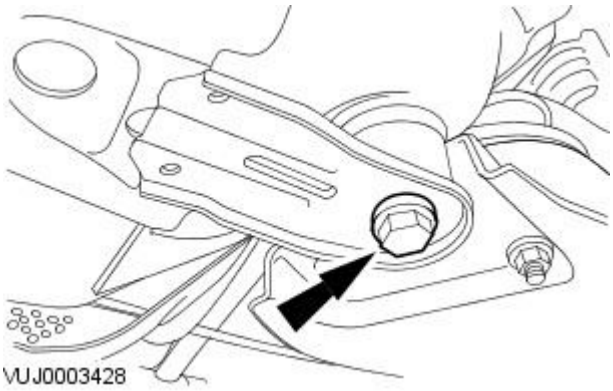

6. Loosen the subframe rear mount bolt.

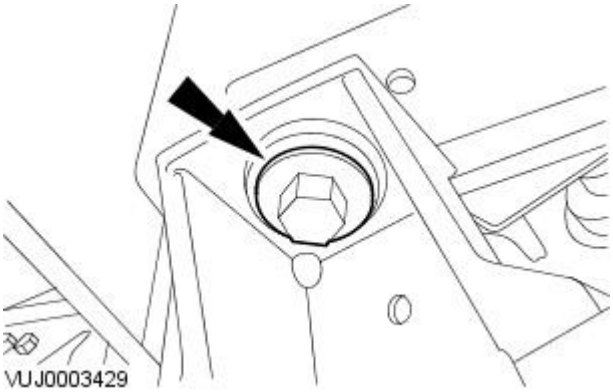

7. Loosen the subframe front mount bolt.

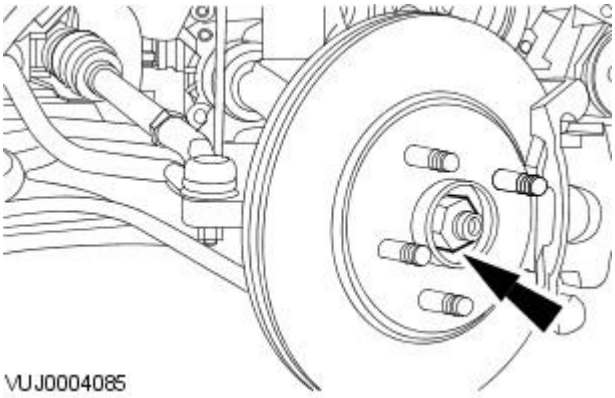

8. Remove and discard the wheel hub nut.

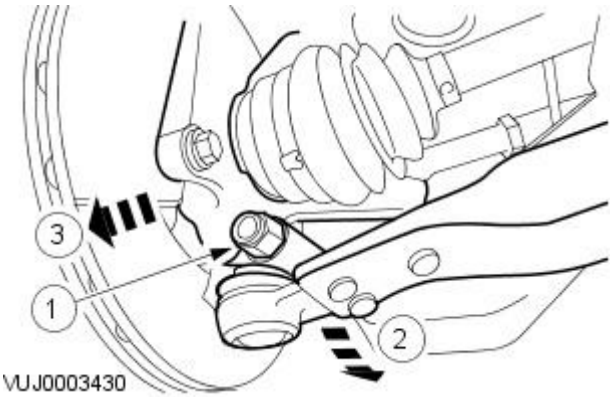

9. Detach the wheel knuckle.

1. Remove the lower arm ball joint retaining bolt.
2. Reposition the lower arm.
3. Detach the wheel knuckle.

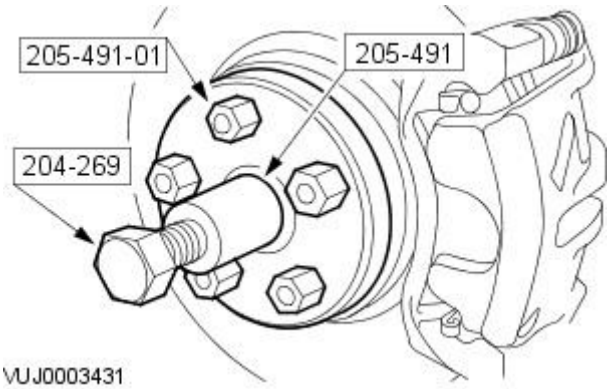

10. Using the special tools, detach the halfshaft.

Vehicles with 2.5L or 3.0L engine

11. Remove the exhaust muffler inlet pipe.
For additional information, refer to: Muffler Inlet Pipe - 2.0L NA V6 - AJV6/2.5L NA V6 - AJV6/3.0L NA V6 - AJ27 (309-00 Exhaust System, Removal and Installation).

12. Remove the halfshaft seal.

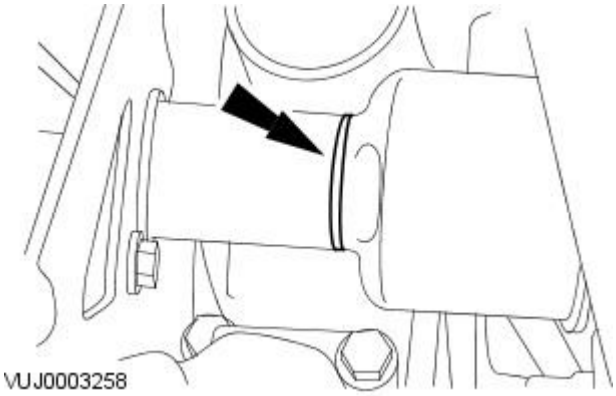

13. Remove the transfer case Y bracket retaining bolt.

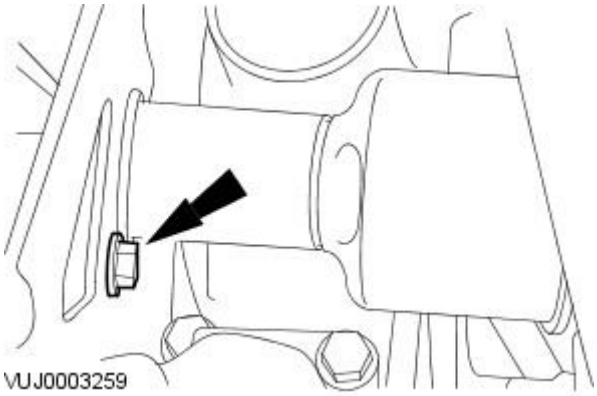

14. CAUTION: To prevent damage to the transfer box internal seal, make sure that the link shaft is not retracted further than 200 mm from the transfer box casing.

Using the special tools, remove the halfshaft.

1. Attach special tools to the halfshaft.
2. Lever the special tools to displace the halfshaft.
3. Install the transfer case Y bracket retaining bolt.
4. Remove the halfshaft.

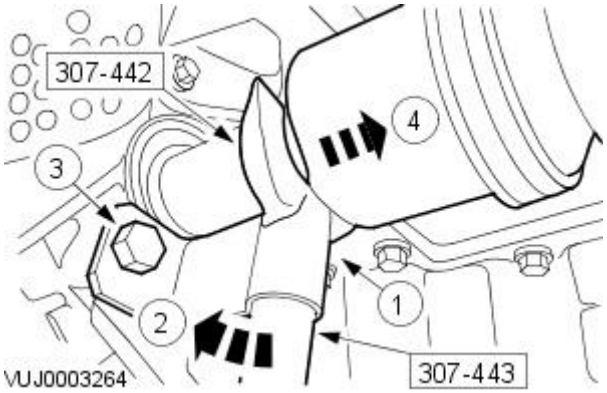

Vehicles with 2.0L engine

15. Remove the halfshaft.

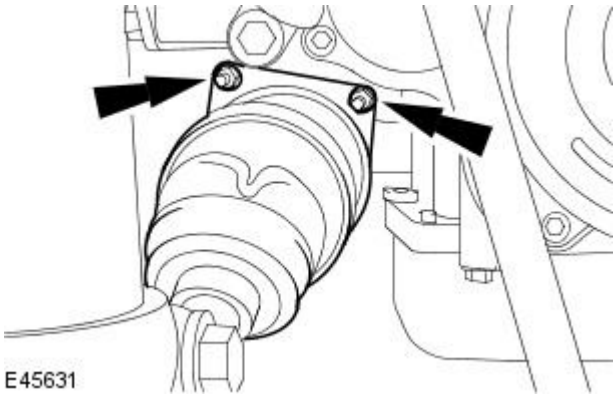

All vehicles

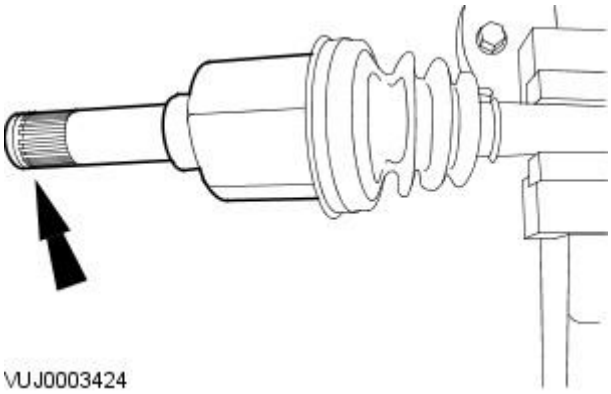

16. CAUTION: Use suitable protective covers to protect the barshaft.

Remove and discard the halfshaft snap ring.

Installation

All vehicles

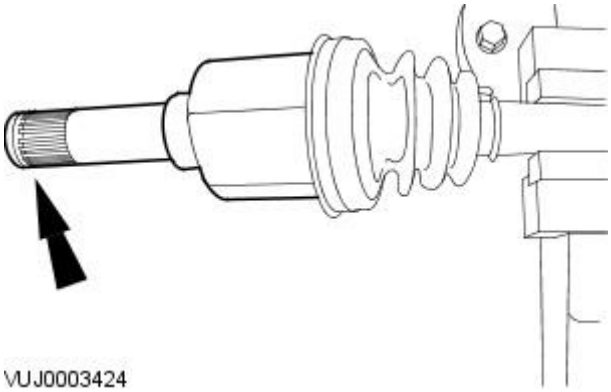

1. Install a new snap ring to the halfshaft.

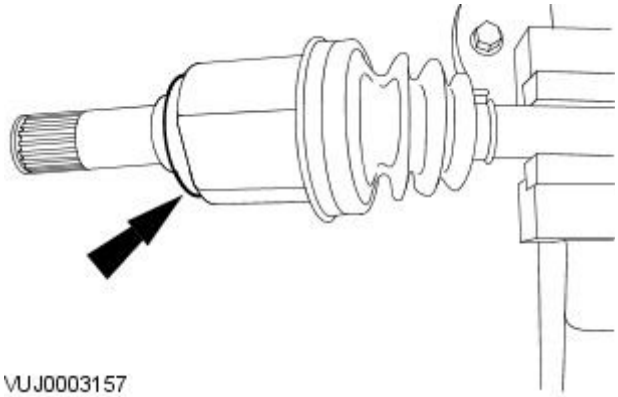

2. Install a new halfshaft seal.

Vehicles with 2.0L engine

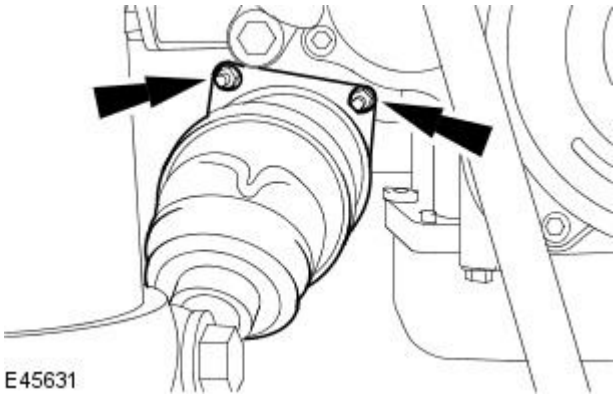

3. Install the halfshaft.

- Tighten to 25 Nm.

Vehicles with 2.5L or 3.0L engine

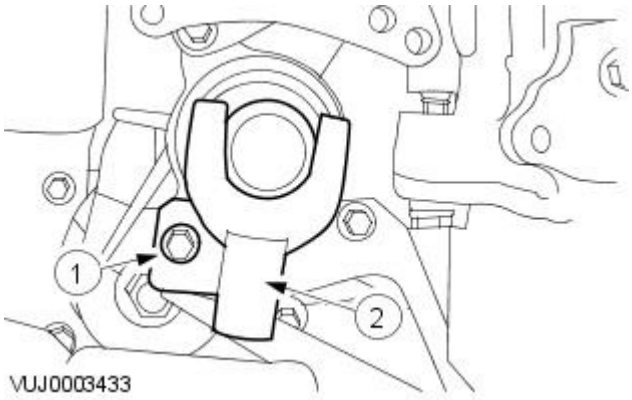

4. Remove the special tool.

1. Remove the transfer case Y bracket retaining bolt.
2. Remove the special tool.

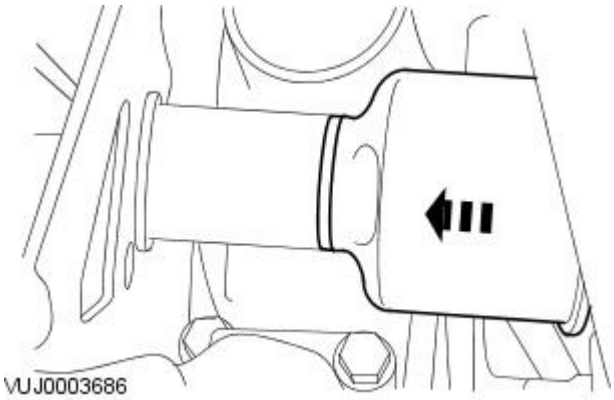

5. CAUTION: Make sure the CV joint splines are located fully. Do not use excessive force when engaging the CV joint into the link shaft.

Install the halfshaft.

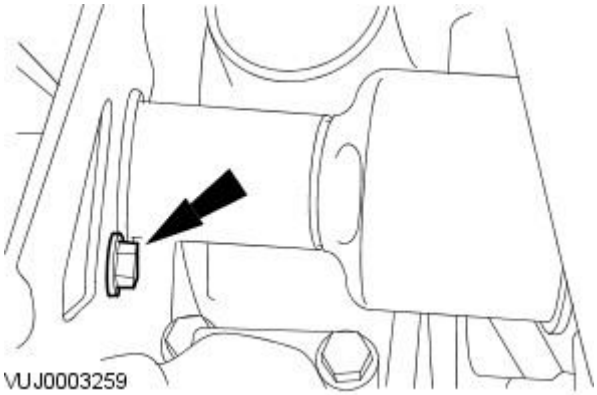

6. Install the transfer case Y bracket retaining bolt.

- Tighten to 25 Nm.

7. Install the exhaust muffler inlet pipe.
For additional information, refer to: Muffler Inlet Pipe - 2.0L NA V6 - AJV6/2.5L NA V6 - AJV6/3.0L NA V6 - AJ27 (309-00 Exhaust System, Removal and Installation).

All vehicles

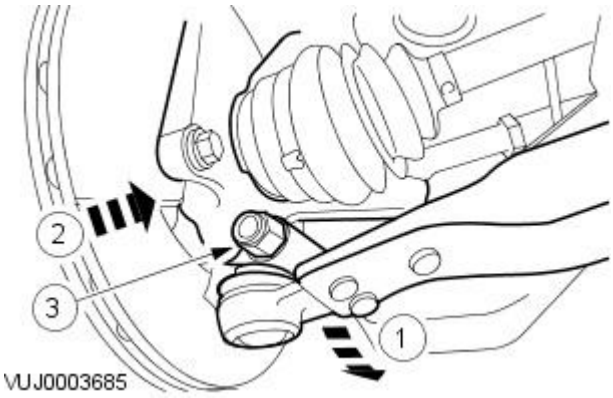

8. Attach the wheel knuckle.

1. Reposition the lower arm.
2. Attach the wheel knuckle.
3. Install the lower arm ball joint retaining bolt.

- Tighten to 83 Nm.

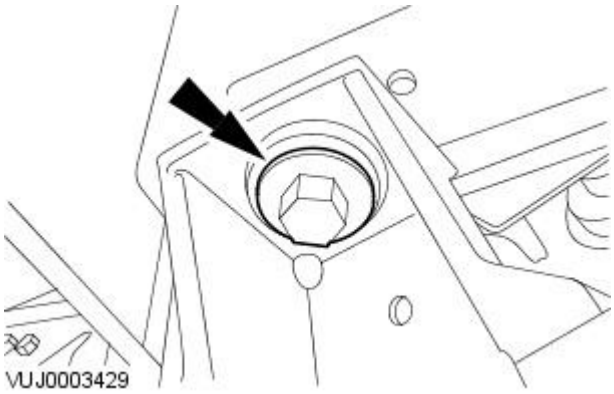

9. Tighten the subframe front mount retaining bolt.

- Tighten to 142 Nm.

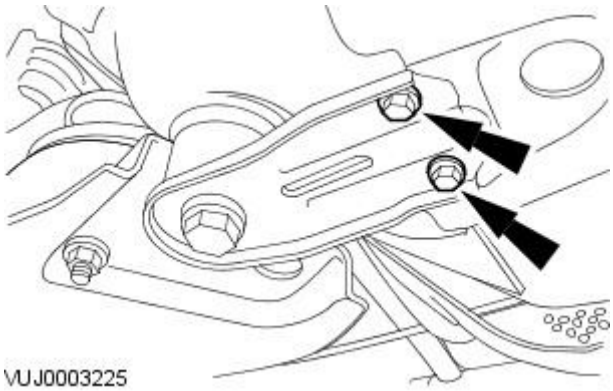

10. Install the subframe reinforcement plate retaining bolts.

- Tighten to 35 Nm.

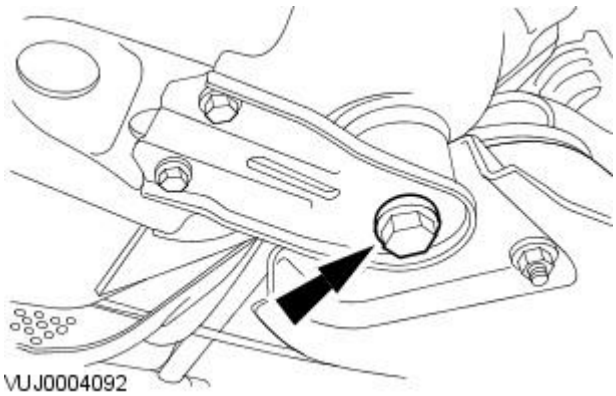

11. Tighten to 142 Nm.

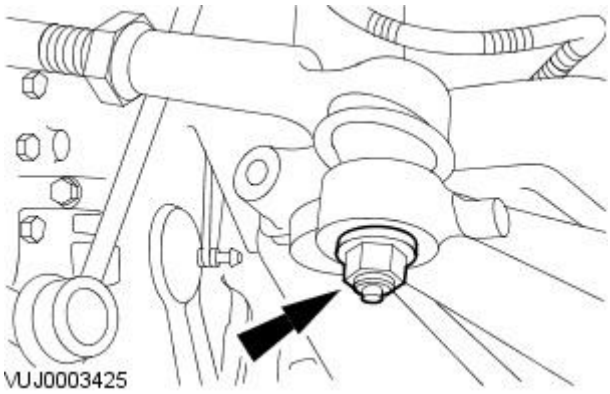

12. Install the tie-rod end.

- Tighten to 35 Nm.

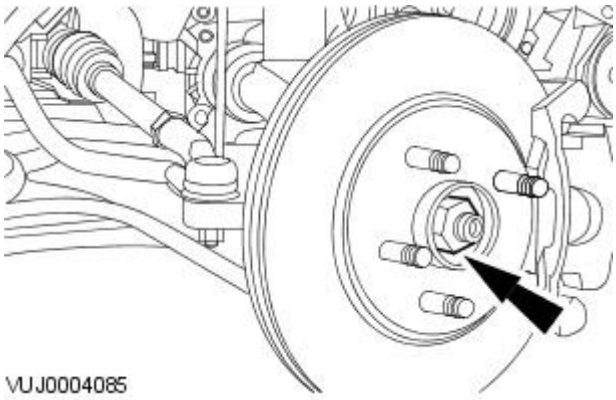

13. Loosely install a new wheel hub nut.

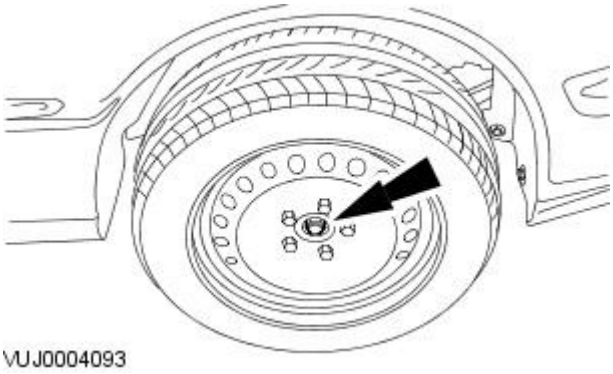

14. Install the front road wheel and tire.
For additional information, refer to: Wheel and Tire (204-04 Wheels and Tires, Removal and Installation).

15. Tighten the wheel hub nut.

- Tighten to 270 Nm.

16. Check the subframe alignment.
For additional information, refer to: Underbody Misalignment Check (502-00 Uni-Body, Subframe and Mounting System, General Procedures).

Front Drive Halfshafts - Front Halfshaft RH2.0L Duratorq-TDCi/2.2L Duratorq-TDCi (110kW/150PS) - Puma

Removal and Installation

Special Tool(s)	
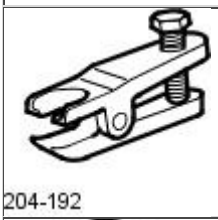 204-192	Ball joint splitter 204-192
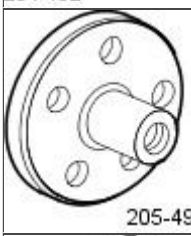 205-491	Wheel hub puller 205-491
20549101	Adapter nuts 205-491-01
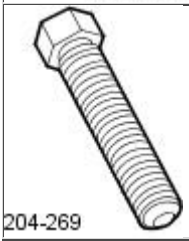 204-269	Forcing screw 204-269

Removal

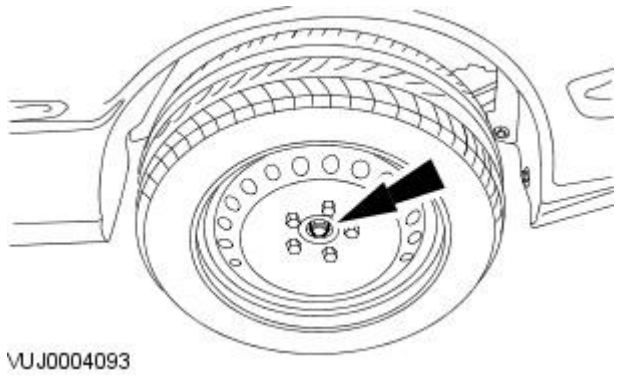

1. Loosen the wheel hub nut.

2. Remove the front road wheel and tire.
   For additional information, refer to: Wheel and Tire (204-04 Wheels and Tires, Removal and Installation).

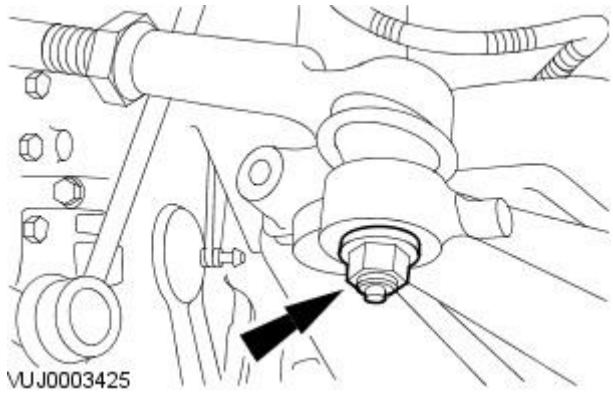

3. Remove the tie rod-end retaining nut.

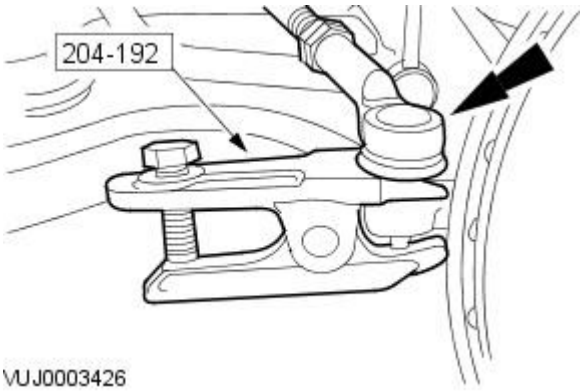

4. Using the special tool, detach the tie-rod end.

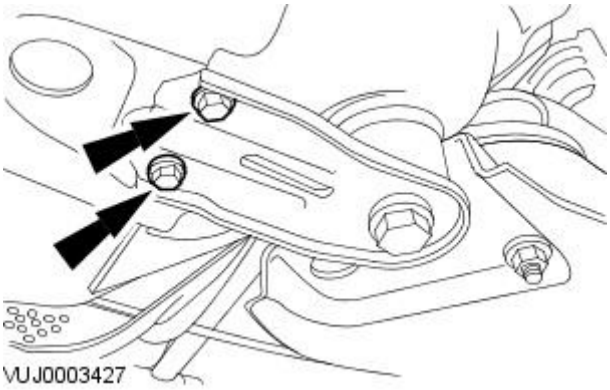

5. Remove the subframe reinforcement plate retaining bolts.

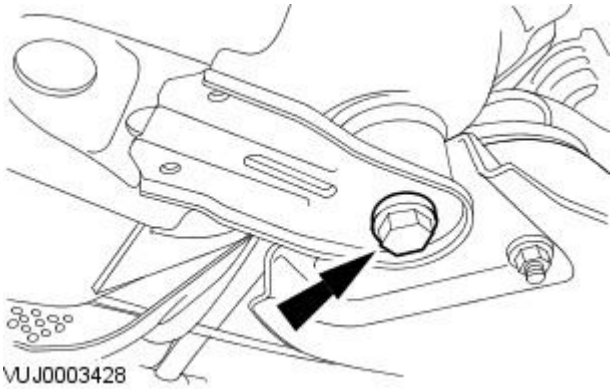

6. Loosen the subframe rear mount bolt.

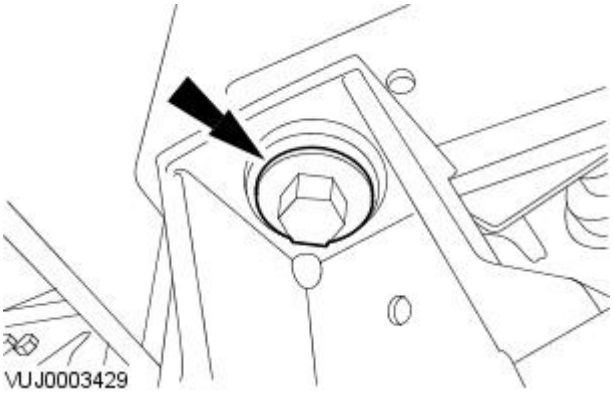

7. Loosen the subframe front mount bolt.

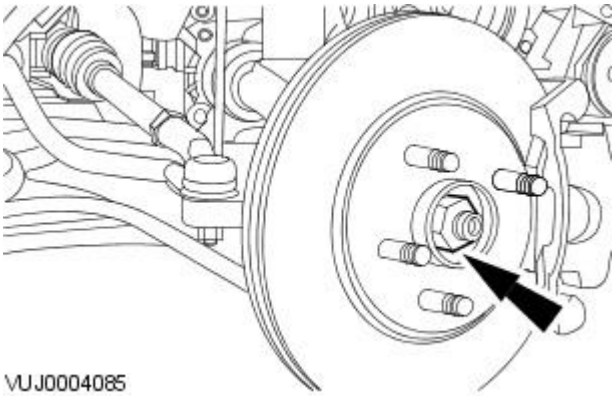

8. Remove and discard the wheel hub nut.

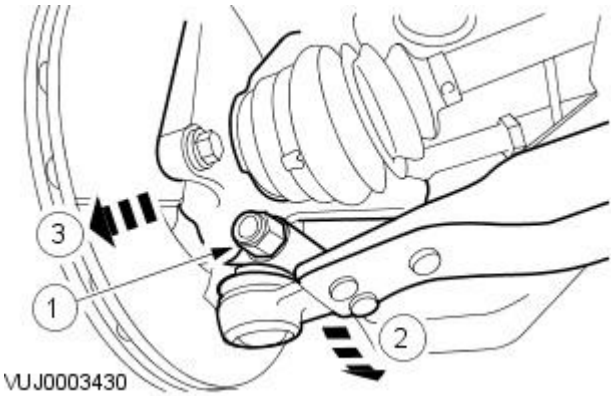

9. Detach the wheel knuckle.

1. Remove the lower arm ball joint retaining bolt.
2. Reposition the lower arm.
3. Detach the wheel knuckle.

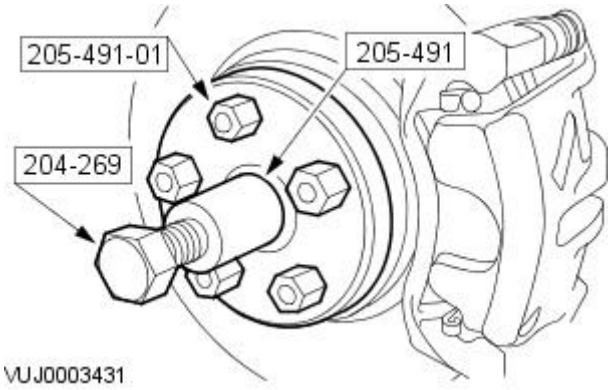

10. Using the special tools, detach the halfshaft.

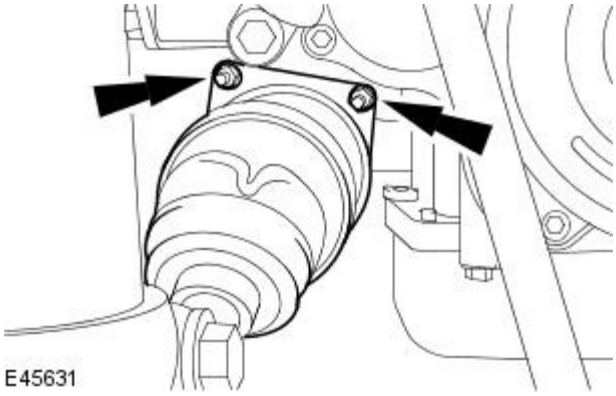

11. Remove the halfshaft.

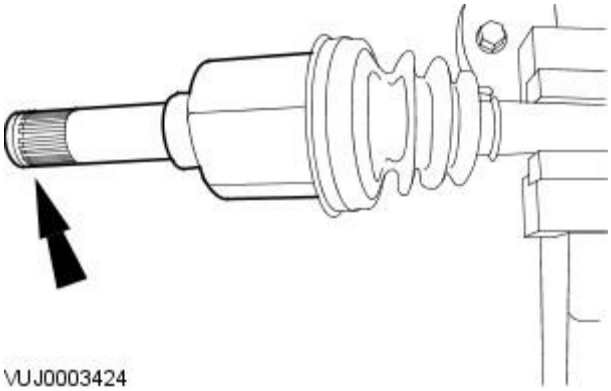

12. CAUTION: Use suitable protective covers to protect the barshaft.

Remove and discard the halfshaft snap ring.

Installation

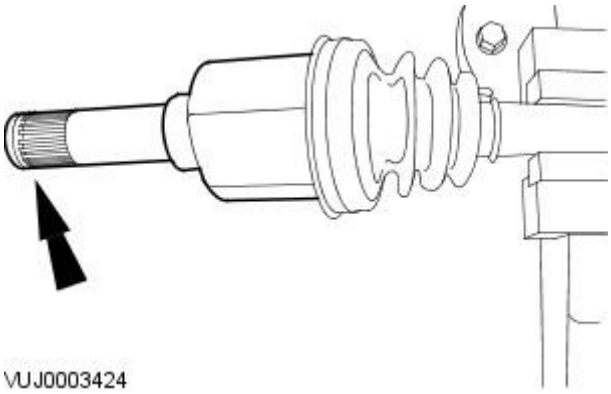

1. Install a new snap ring to the halfshaft.

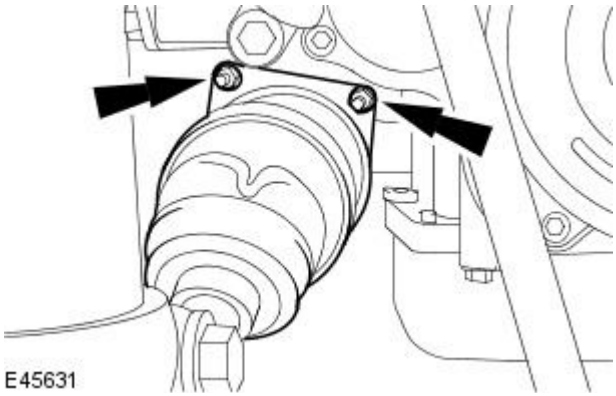

2. Install the halfshaft.

- Tighten to 25 Nm.

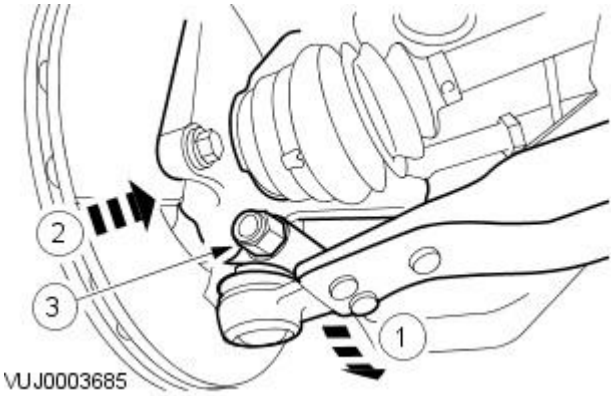

3. Attach the wheel knuckle.

1. Reposition the lower arm.
2. Attach the wheel knuckle.
3. Install the lower arm ball joint retaining bolt.

- Tighten to 83 Nm.

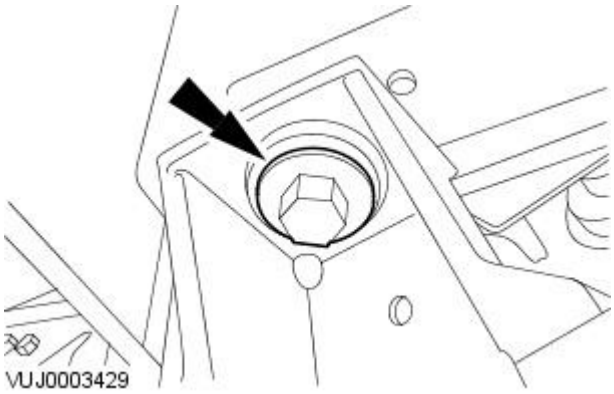

4. Tighten the subframe front mount retaining bolt.

- Tighten to 142 Nm.

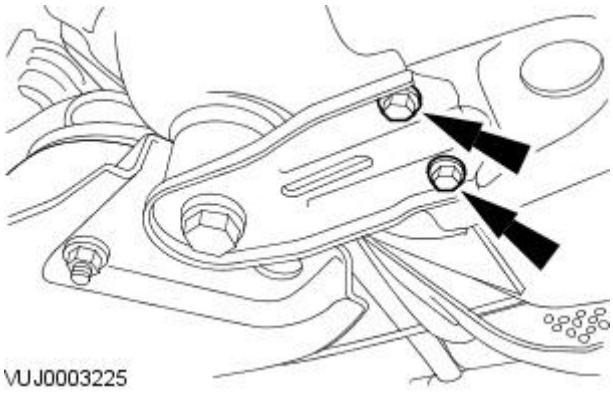

5. Install the subframe reinforcement plate retaining bolts.

- Tighten to 35 Nm.

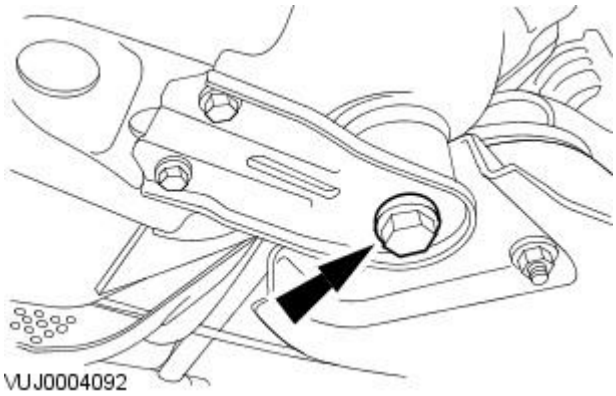

6. Tighten to 142 Nm.

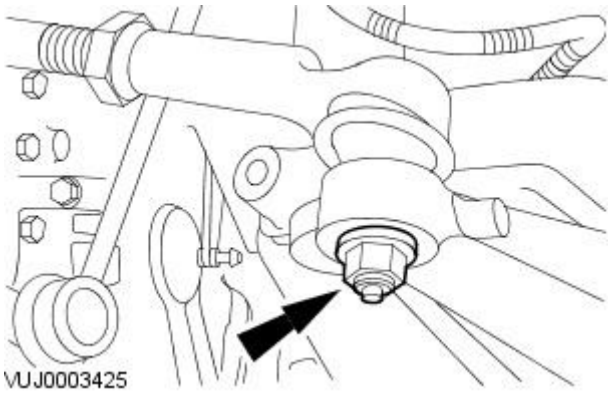

7. Install the tie-rod end.

- Tighten to 35 Nm.

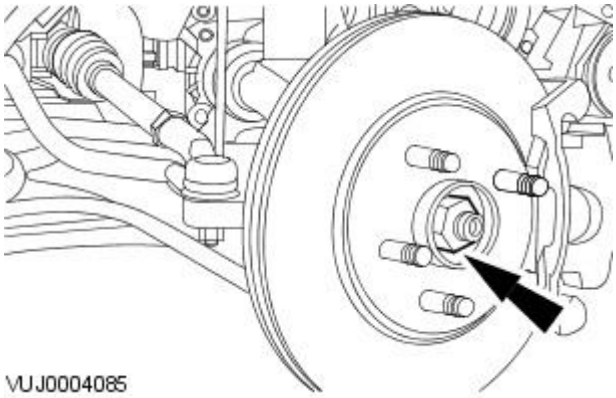

8. Loosely install a new wheel hub nut.

9. Install the front road wheel and tire.
For additional information, refer to: Wheel and Tire (204-04 Wheels and Tires, Removal and Installation).

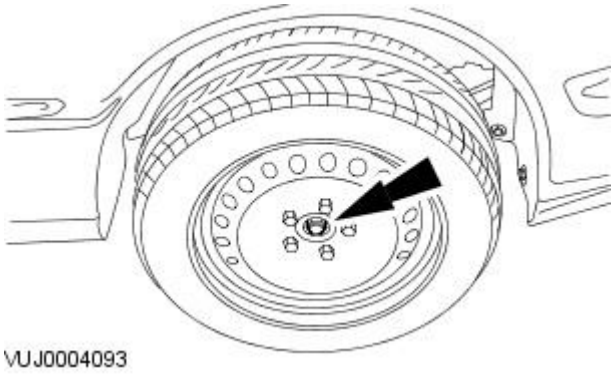

10. Tighten the wheel hub nut.

- Tighten to 270 Nm.

11. Check the subframe alignment.
For additional information, refer to: Underbody Misalignment Check (502-00 Uni-Body, Subframe and Mounting System, General Procedures).

Front Drive Halfshafts - Inner Constant Velocity (CV) Joint Boot

Removal and Installation

Removal

1. Remove the front halfshaft. For additional information, refer to Halfshaft LH. For additional information, refer to Halfshaft RH.

2. CAUTION: Use suitable protective covers to protect the barshaft.

   Using a suitable clamp, secure the front halfshaft.

3. Remove the inner constant velocity (CV) joint boot outer retaining clip.
   - Remove and discard the retaining clip.

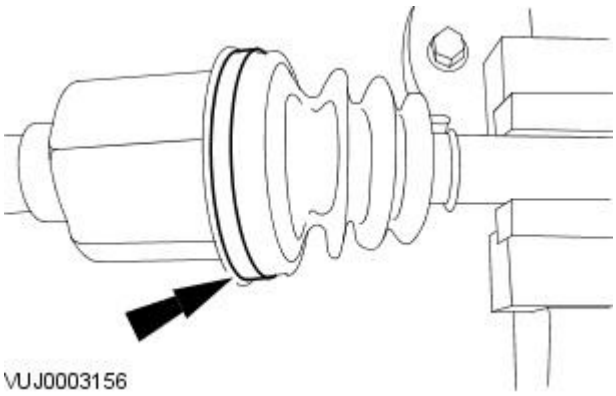

VUJ0003156

4. Remove the tripod star housing.
   - Remove and discard the grease.

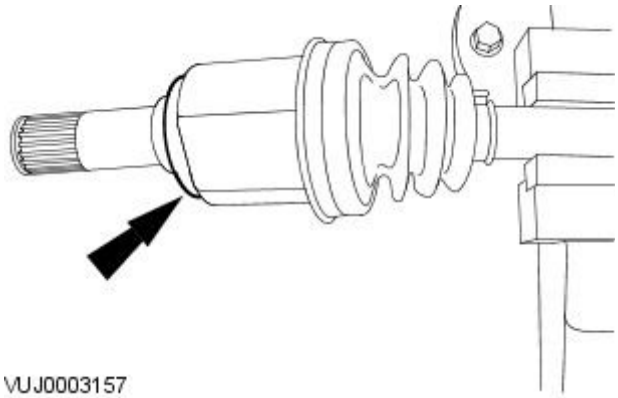

VUJ0003157

5. Remove the tripod star circlip.

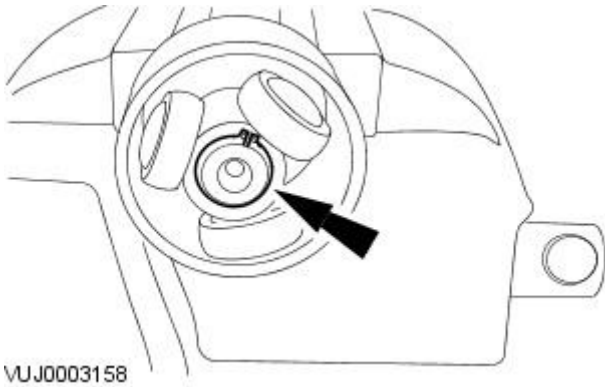

VUJ0003158

6. CAUTION: Do not damage the roller bearings.

   Using a suitable brass drift, remove the tripod star.

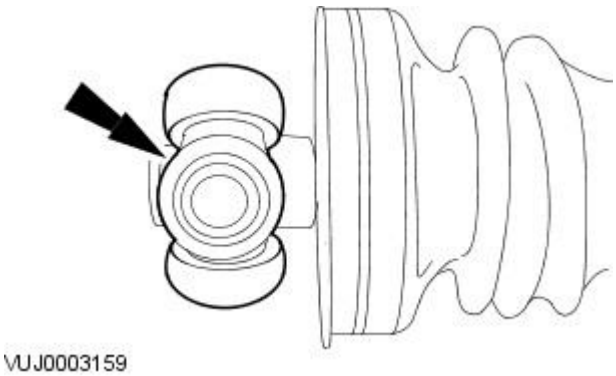

VUJ0003159

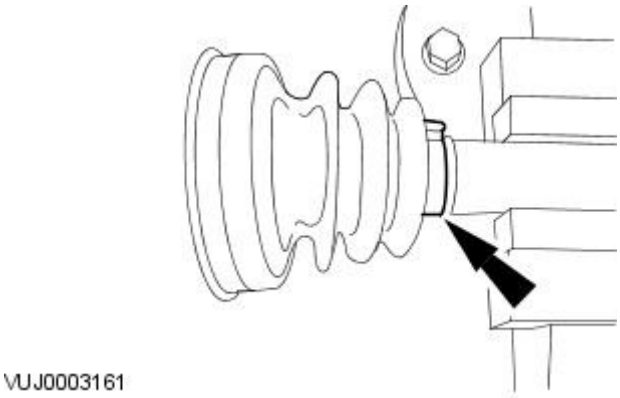

7. Remove the inner CV joint boot retaining clip.

- Remove and discard the retaining clip.

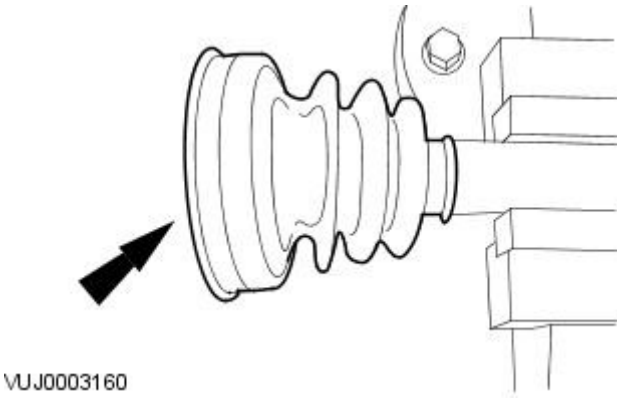

8. Remove the inner CV joint boot.

Installation

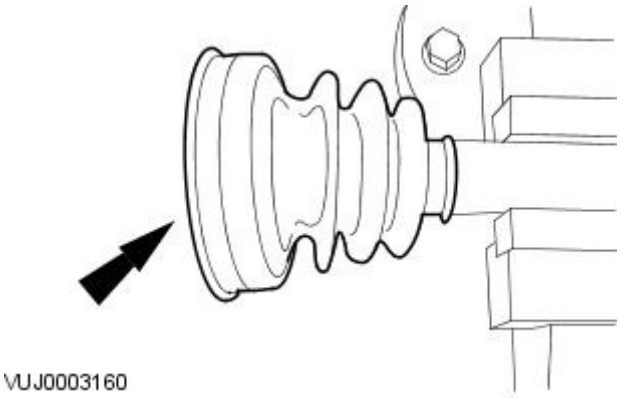

1. Install the inner CV joint boot.

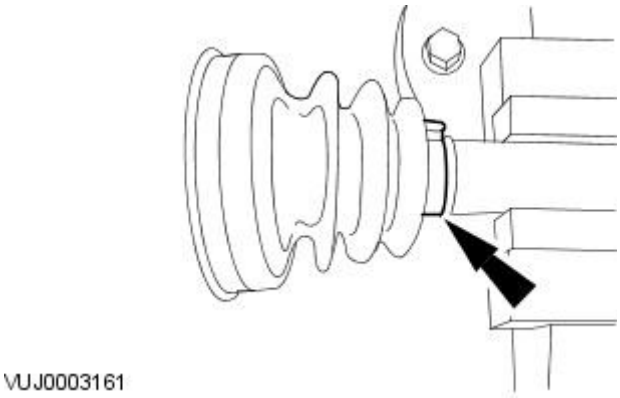

2. NOTE: Install a new retaining clip.

Using a suitable tool, install the inner CV joint boot retaining clip.

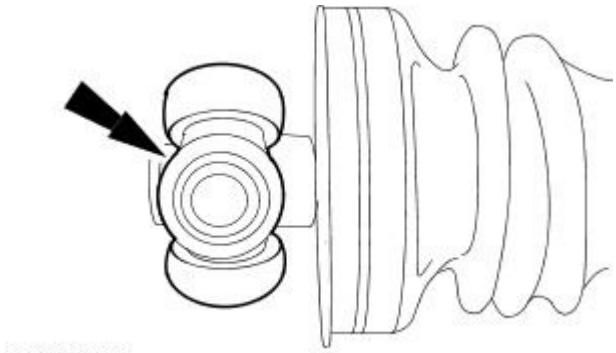

VUJ0003159

3. CAUTION: Do not damage the roller bearings.

Install the tripod star.

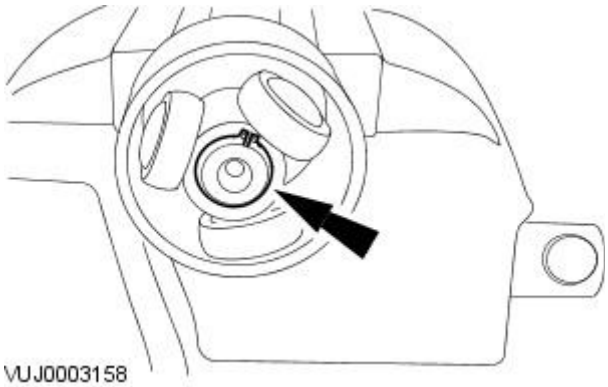

VUJ0003158

4. Install the tripod star circlip.

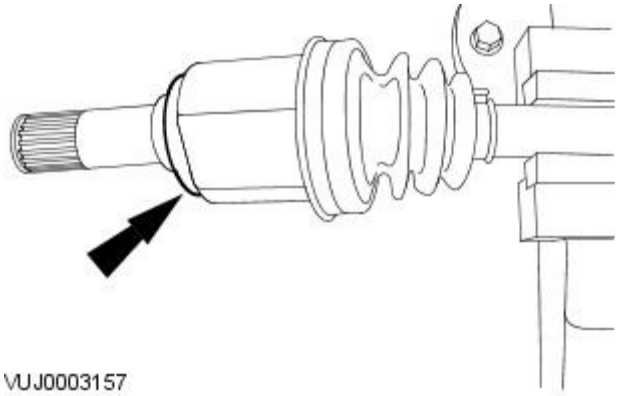

VUJ0003157

5. NOTE: Install new grease.

Install the tripod star housing.

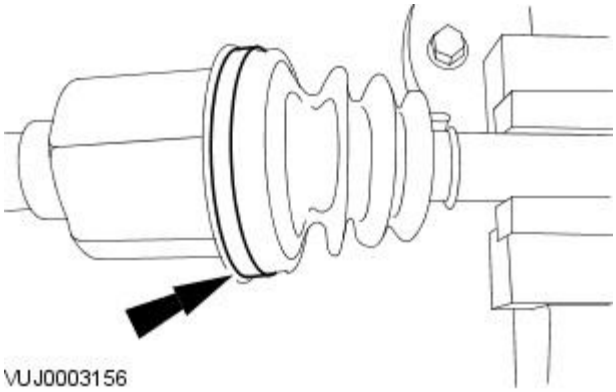

VUJ0003156

6. NOTE: Make sure enough air is present in the CV boot.

- NOTE: Install a new retaining clip.

Using a suitable tool, install the inner constant velocity (CV) joint boot outer retaining clip.

7. Remove the front halfshaft from the clamp.
8. Install the front halfshaft. For additional information, refer to Halfshaft LH. For additional information, refer to Halfshaft RH.

Front Drive Halfshafts - Intermediate Shaft

Removal and Installation

Removal

All vehicles

1. Remove the right-hand halfshaft.
   For additional information, refer to Halfshaft RH in this section.

Vehicles with automatic transmission

2. Drain the automatic transmission fluid. For additional information, refer to Section 307-01A Automatic Transmission/Transaxle / 307-01B Automatic Transmission/Transaxle.

Vehicles with manual transmission

3. Drain the manual transmission fluid.
   For additional information, refer to Section 308-03 Manual Transmission/Transaxle.

All vehicles

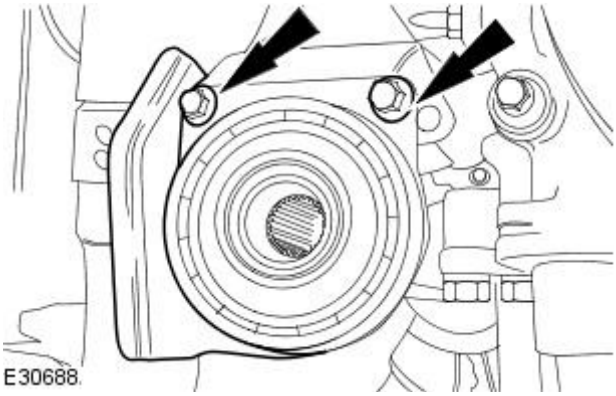

4. CAUTION: Before removing the bearing carrier retaining bolts, identify their correct position. Failure to follow this procedure will result in damage to the vehicle.

   Remove the intermediate shaft bearing carrier retaining bolts.

   - Remove the branch pipe heat shield.

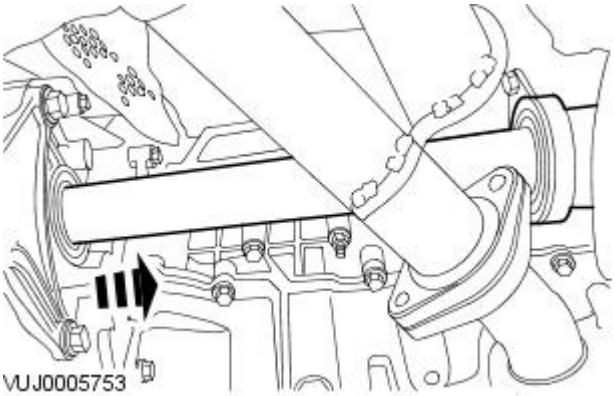

5. Remove the intermediate shaft.

Installation

All vehicles

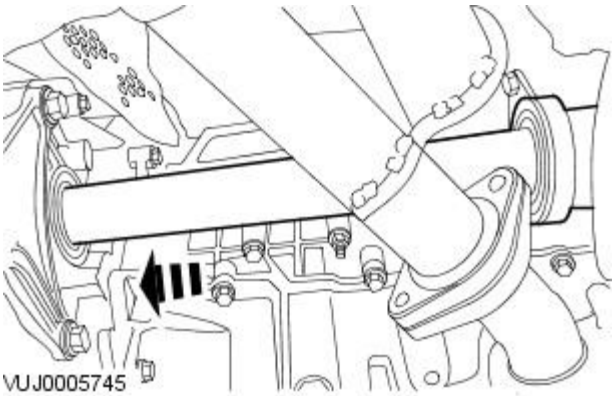

1. CAUTION: Make sure the intermediate shaft splines are located fully. Do not use excessive force when engaging the intermediate shaft into the transmission.

   Install the intermediate shaft.

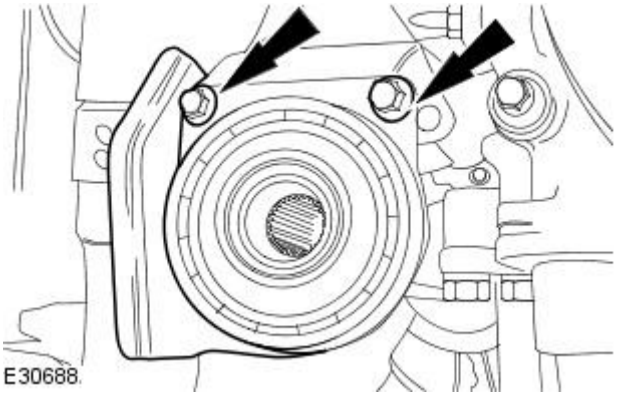

2. CAUTION: Before installing the bearing carrier retaining bolts make sure that the bearing carrier is located in the same position that it was removed from, failure to follow this procedure will result in damage to the vehicle.

Install the branch pipe heat shield.

- Tighten to 25 Nm.

Vehicles with automatic transmission

3. Refill the automatic transmission system. For additional information, refer to Section 307-01A Automatic Transmission/Transaxle / 307-01B Automatic Transmission/Transaxle.

Vehicles with manual transmission

4. Refill the manual transmission.
For additional information, refer to Section 308-03 Manual Transmission/Transaxle.

All vehicles

5. Install the right-hand halfshaft.
For additional information, refer to Halfshaft RH in this section.

Front Drive Halfshafts - Outer Constant Velocity (CV) Joint Boot

Removal and Installation

Removal

1. Remove the front halfshaft. For additional information, refer to Halfshaft LH. For additional information, refer to Halfshaft RH.

2. CAUTION: Use suitable protective covers to protect the barshaft.

   Using a suitable clamp, secure the front halfshaft

3. Remove the outer constant velocity (CV) joint retaining clips.
   - Remove and discard the retaining clips.

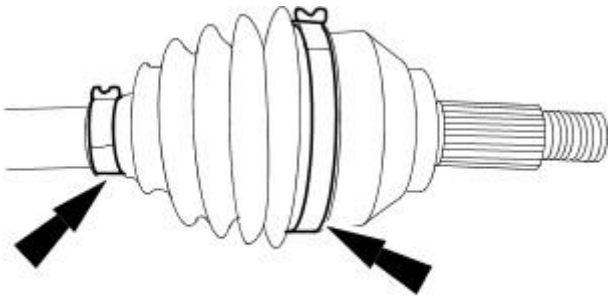

VUJ0003163

4. Detach the outer CV joint boot.
   - Remove and discard the grease.

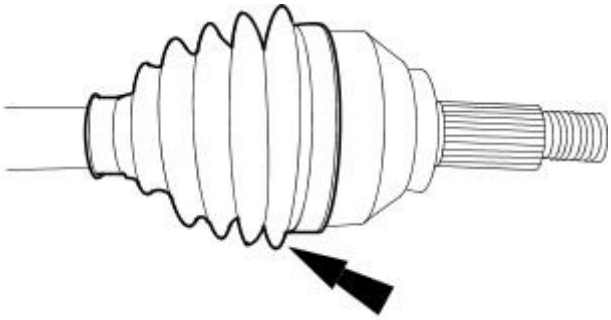

VUJ0003164

5. CAUTION: Do not damage the bearing retainer.

• NOTE: The outer CV joint is retained to the shaft by a spring clip.

   Using a suitable brass drift, remove the outer CV joint.

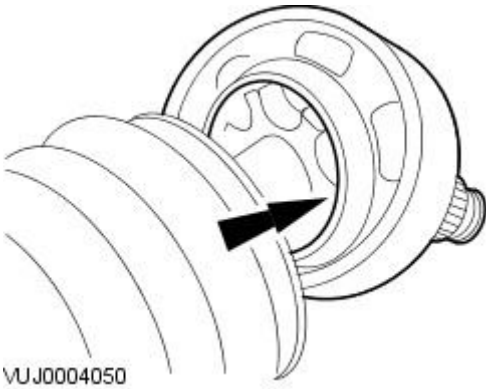

VUJ0004050

6. Remove the outer CV joint boot.

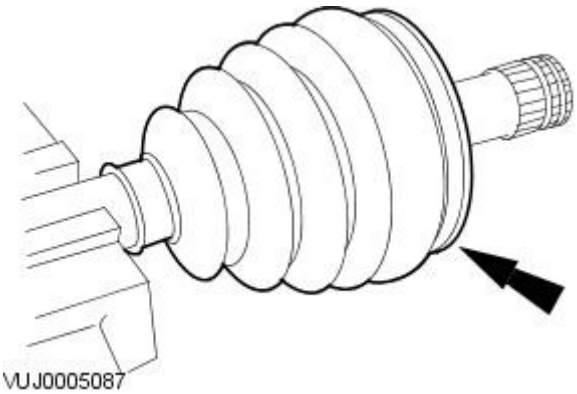

VUJ0005087

Installation

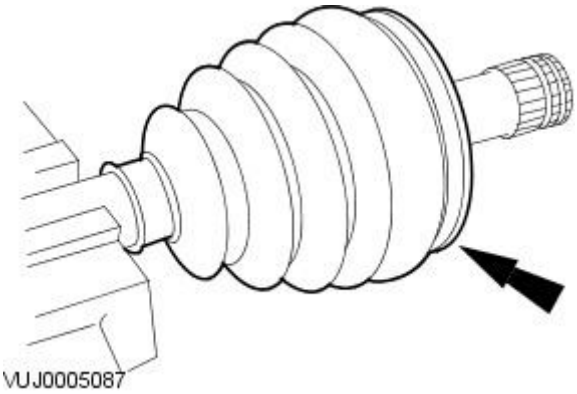

1. Install the outer CV joint boot.

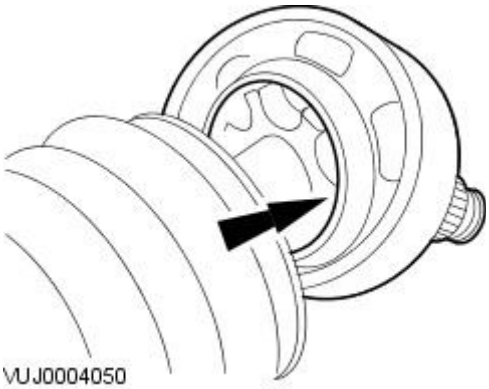

2. CAUTION: Do not damage the bearing retainer.

• NOTE: The outer CV joint is retained to the shaft by a spring clip.

Install the outer CV joint.

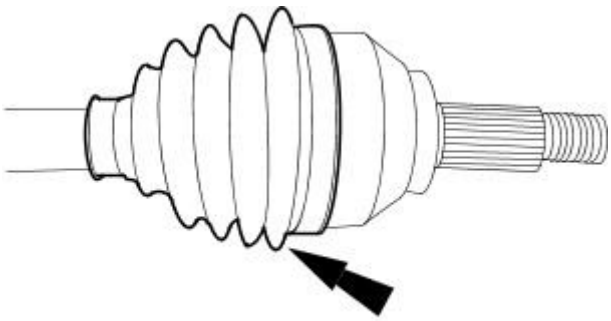

3. Attach the outer CV joint boot.

- Install new grease.

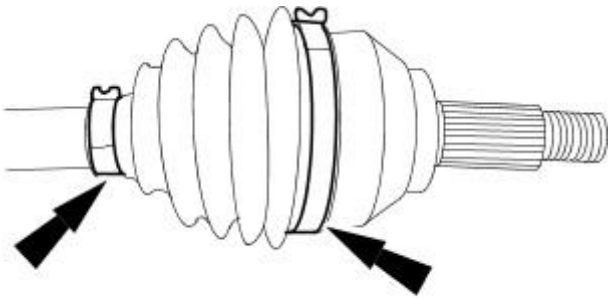

4. NOTE: Make sure enough air is present in the CV boot.

• NOTE: Install new retaining clips.

Using a suitable tool, install the CV joint retaining clips.

5. Remove the front halfshaft from the clamp.

6. Install the front halfshaft. For additional information, refer to Halfshaft LH. For additional information, refer to Halfshaft RH.

Published: 11-May-2011

Rear Drive Halfshafts -

Lubricants, Fluids, Sealers and Adhesives

Item	Specification
Constant velocity (CV) grease	Olistamoly LN 584 LO

Fill Capacities

Description	Grams
Grease for inner CV joint boot	90
Grease for inner CV joint	90
Grease for outer CV joint boot	90
Grease for outer CV joint	90

Rear Drive Halfshafts - Rear Drive Halfshafts

Description and Operation

Rear Drive Halfshafts

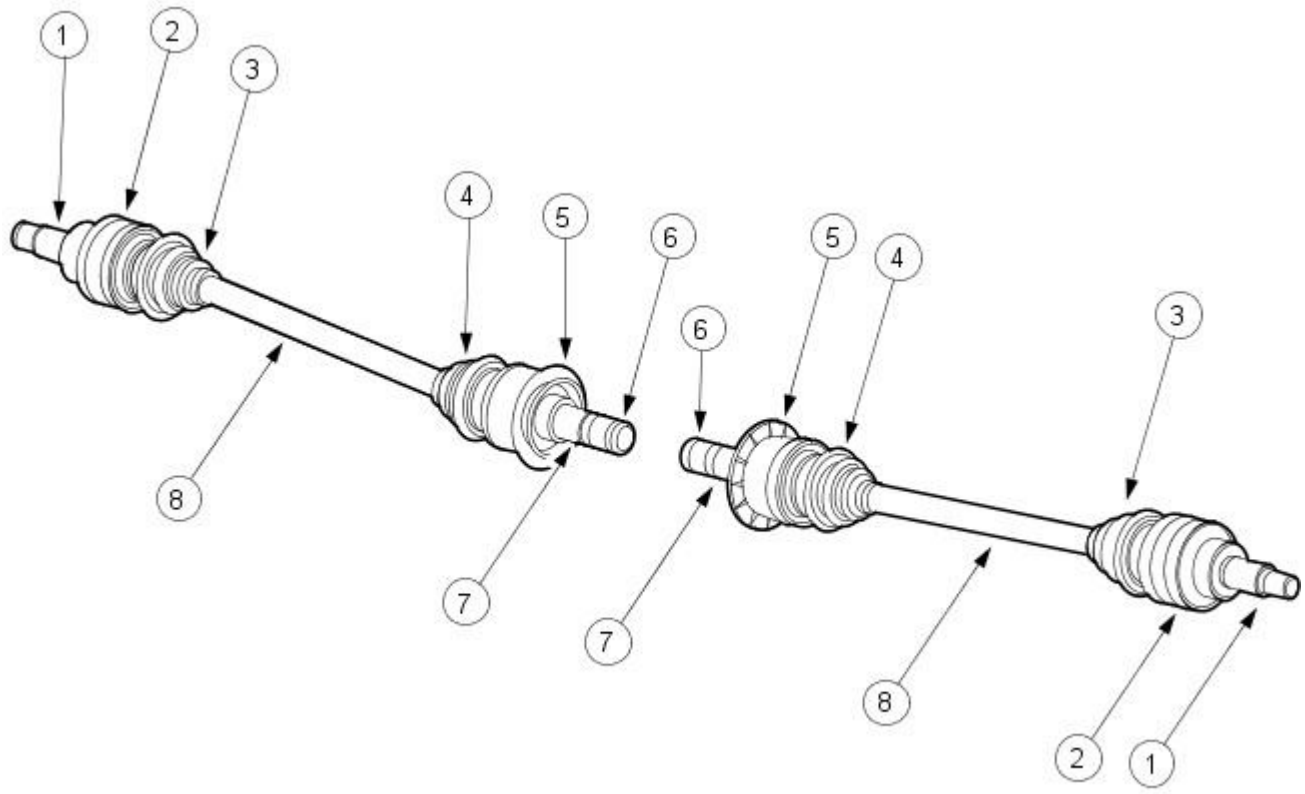

VUJ0003011

Item	Part Number	Description
1	—	Outer constant velocity (CV) joint
2	—	Anti-lock brake system (ABS) ring
3	—	Outer CV joint boot
4	—	Inner CV joint boot
5	—	Seal protector
6	—	Spring clip
7	—	Inner CV joint
8	—	Barshaft

The rear drive halfshafts are of unequal lengths and both the inner CV joint and outer CV joints are of the plunger type.

The outer CV joints are fitted with an ABS ring which is continuously monitored by the wheel speed sensor.

The inner and outer CV joints are linked by a solid barshaft. The inner CV joints are retained in the differential with the aid of a spring clip.

The inner CV joints are fitted with plastic seal protectors to protect the halfshaft oil seals located in the differential from debris.

Due to the unique construction of the rear drive halfshafts they are not a serviceable item. If a problem occurs the halfshaft must be replaced as a complete unit.

Handling Rear Drive Halfshafts

The following points should be observed when handling rear drive halfshafts:

- Do not pull on the CV joints
- Do not allow the CV joints to exceed 18 degrees of travel
- Check polished surfaces and splines for damage
- Do not allow the CV joint boots to come into contact with sharp edges, hot vehicle components or the exhaust system
- Do not drop the rear drive halfshafts, this may cause damage to the splined sections of the CV joints, the threaded sections of the CV joints or the interior of the boots which may not be visible
- Do not support the rear drive halfshaft by holding the CV joint alone

Underbody Protection and Corrosion Prevention

The CV joint boots should be covered during application of underbody protection or corrosion prevention. Foreign matter on the CV boots may cause premature ageing of the material. Foreign material on the rear drive halfshafts may cause imbalance.

Published: 11-May-2011

Rear Drive Halfshafts - Rear Drive Halfshafts

Diagnosis and Testing

For additional information, refer to Section 205-00 Driveline System - General Information.

Rear Drive Halfshafts - Rear Halfshaft

Removal and Installation

Special Tool(s)	
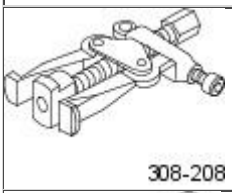 308-208	Remover, Axle Shaft Oil Seal 308-208
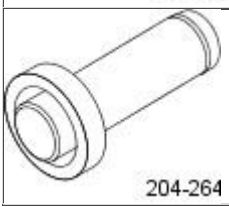 204-264	Installer, Oil Seal 204-264

Removal

1. Remove the wheel knuckle.
   For additional information, refer to: Wheel Knuckle (204-02 Rear Suspension, Removal and Installation).
2. Remove the halfshaft.

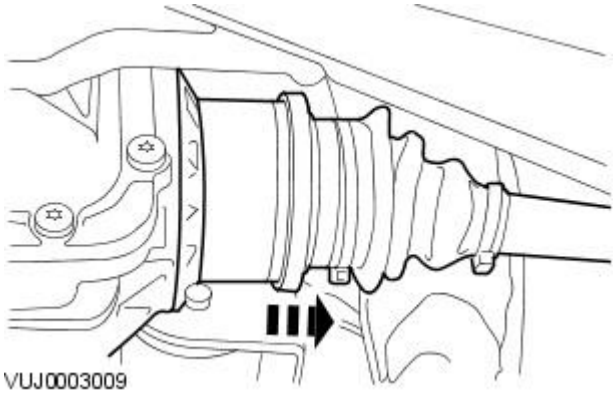

3. Using the special tool, remove and discard the axle shaft oil seal.

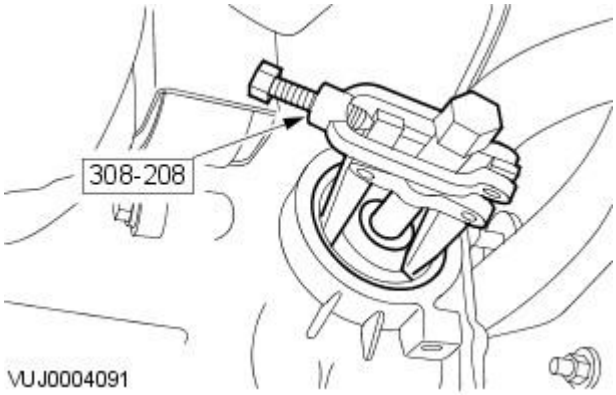

Installation

1. Using the special tool, install the axle shaft oil seal.

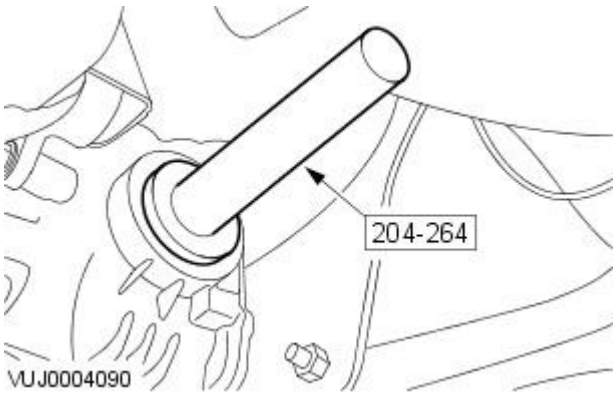

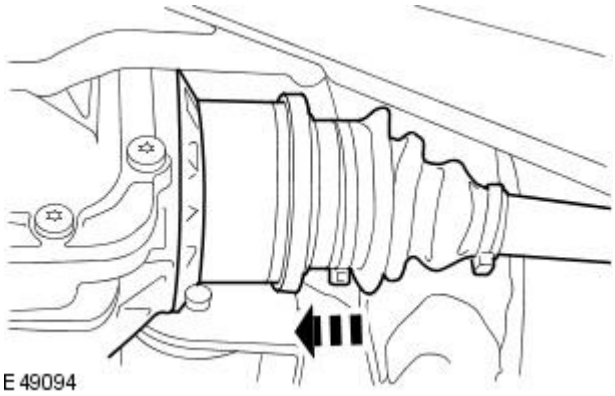

2. NOTE: When installing the halfshaft make sure the spring clip is fully engaged in the differential.

Install the halfshaft.

3. Install the wheel knuckle.
For additional information, refer to: Wheel Knuckle (204-02 Rear Suspension, Removal and Installation).

Rear Drive Halfshafts - Outer Constant Velocity (CV) Joint Boot

Removal and Installation

Removal

• NOTE: Outer Constant Velocity (CV) Joint Boot shown, inner Constant Velocity (CV) Joint Boot similar.

1. Remove the halfshaft.
For additional information, refer to: Rear Halfshaft (205-05 Rear Drive Halfshafts, Removal and Installation).

2. CAUTION: Use suitable protective covers to protect the halfshaft.

Using a suitable clamp, secure the halfshaft.

3. Remove the outer constant velocity (CV) joint boot retaining clip.

- Discard the retaining clip.

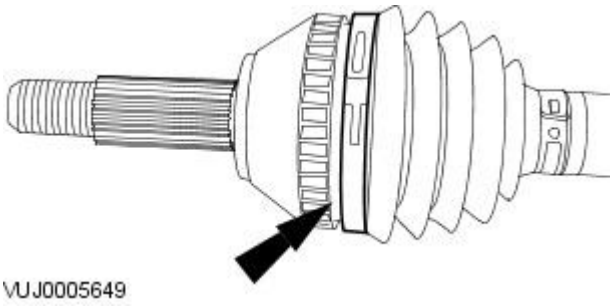

VUJ0005649

4. CAUTION: Do not damage the bearing retainer.

• NOTE: The outer CV joint is retained to the shaft by a spring clip.

Using a suitable brass drift, remove the outer CV joint.

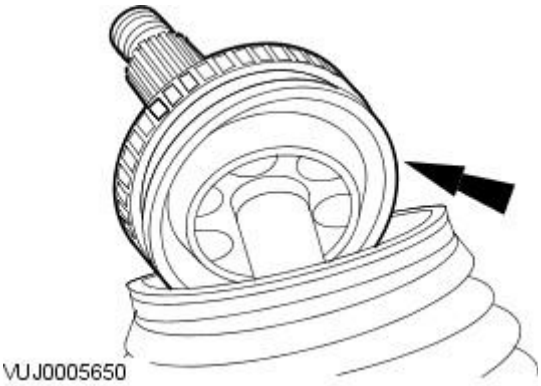

VUJ0005650

5. Remove the retaining clip.

- Discard the retaining clip.

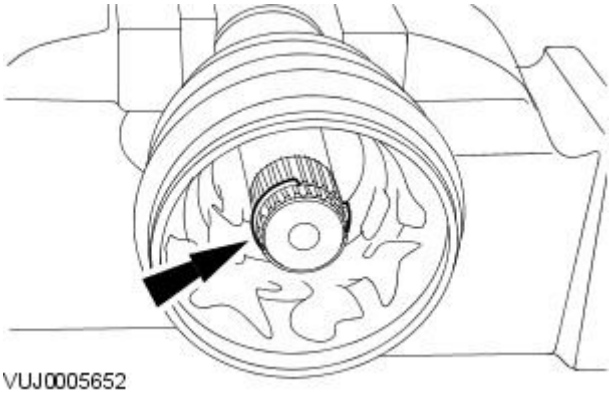

VUJ0005652

6. Remove the outer CV joint boot.

- Discard the retaining clip.

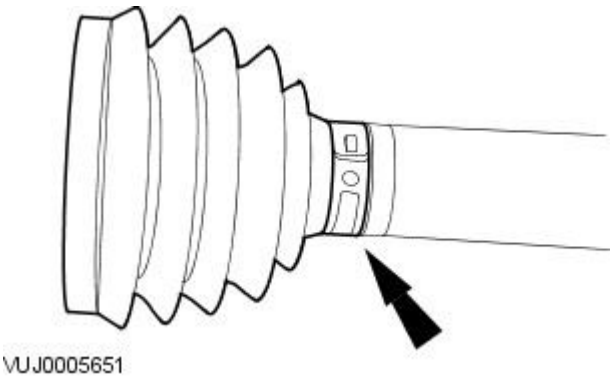

VUJ0005651

Installation

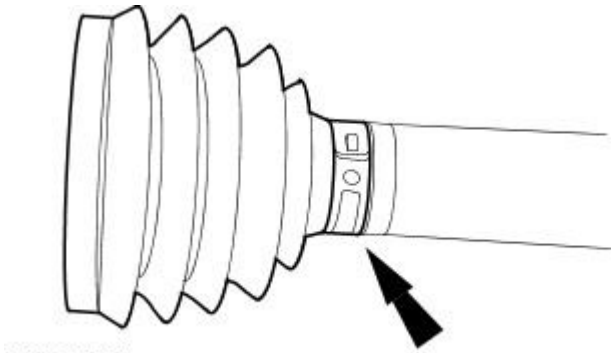

VUJ0005651

1. Install the outer CV joint boot.

- Install a new retaining clip.
- Using a suitable tool, install the retaining clip.

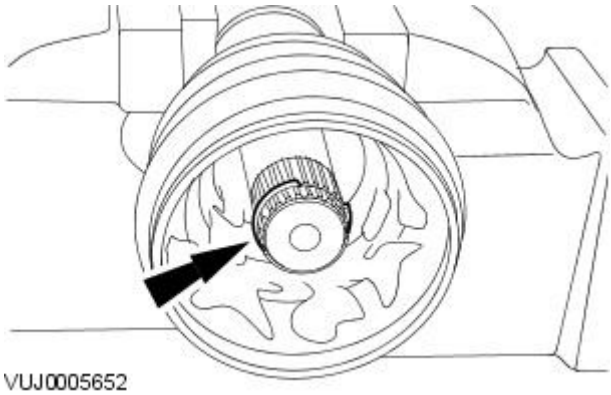

VUJ0005652

2. Install the new retaining clip.

- Install a new retaining clip.
- Using a suitable tool, install the retaining clip.

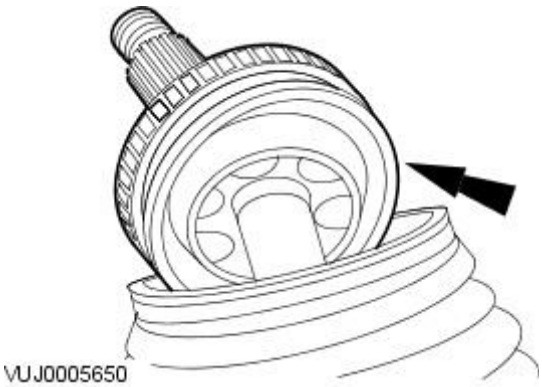

VUJ0005650

3. CAUTION: Make sure the CV joint ball bearings do not drop out of the CV joint.

• NOTE: Use a CV grease meeting Jaguar specification.

Install the outer CV joint.

- Fill the outer CV joint and outer CV gaitor with grease.

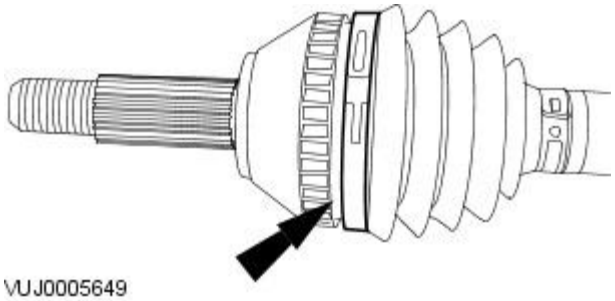

VUJ0005649

4. Install the new retaining clip.

- Using a suitable tool, install the retaining clip.

5. Remove the halfshaft from the clamp.

6. Install the halfshaft.
For additional information, refer to: Rear Halfshaft (205-05 Rear Drive Halfshafts, Removal and Installation).

Brake System - General Information -

Lubricants, Fluids, Sealers and Adhesives

CAUTION: Do not use brake fluid ITT Super Dot 4 on 2006my vehicles onwards. Failure to follow this instruction may result in damage to the vehicle.

• NOTE: Brake fluid ITT Super Dot 4 has now been superseded by Shell ESL Super Dot 4 which is the Jaguar recommended brake fluid. Shell ESL Super Dot 4 can be used on all model years.

Item	Specification
Brake fluid	ITT Super Dot 4
Brake fluid	Shell ESL Super Dot 4
Caliper slide pin grease	Klueber GLK1

Brake Lining and Disc Specifications

Item	Specification
Brake pad nominal thickness - front	10.4 mm (0.40 in)
Brake pad minimum thickness - front	2 mm (0.08 in)
Brake pad nominal thickness - rear	11.80 mm (0.43 in)
Brake pad minimum thickness - rear	2 mm (0.08 in)
Brake disc diameter - front	300 mm (12 in)
Brake disc diameter - rear	280 mm (11.032 in)
New disc nominal thickness - front	24 mm (0.95 in)
New disc nominal thickness - rear	12 mm (0.47 in)
Worn disc discard thickness - front	22.2 mm (0.87 in)
Worn disc discard thickness - rear	10.2 mm (0.40 in)
Maximum disc runout (installed) - front	0.076 mm (0.003 in)
Maximum hub face runout (installed) - front	0.05 mm (0.002 in)
Maximum disc runout (installed) - rear	0.076 mm (0.003 in)
Maximum hub face runout (installed) - rear	0.05 mm (0.002 in)
Maximum thickness variation - new disc - front	0.009 mm (0.0004 in) in 360°
Maximum thickness variation - new disc - rear	0.009 mm (0.0004 in) in 360°
Caliper piston diameter -single piston - front	57 mm (2.24 in)
Caliper piston diameter - rear	38 mm (1.49 in)

Published: 11-May-2011

Brake System - General Information - Brake System

Description and Operation

WARNING: Brake fluid contains polyglycol ethers and polyglycols. Avoid contact with the eyes. Wash hands thoroughly after handling. If brake fluid contacts the eyes, flush the eyes for 15 minutes with cold running water. Get medical attention if irritation persists. If taken internally, drink water and induce vomiting. Get medical attention immediately. Failure to follow these instructions may result in personal injury.

The braking system is a diagonally split, dual circuit design featuring front and rear disc brakes.

The hydraulic system provides separate circuits for each pair of diagonally opposed wheels (left front, right rear and right front, left rear). The front calipers, mounted on the front knuckle, are single pistoned floating caliper design which make sure that equal effort is applied through both brake pads. The rear calipers are a single pistoned floating caliper design. The pads in all cases are asbestos free.

The parking brake control is located between the front seats and operates the rear brakes through a cable system. The cable has a manual adjust mechanism incorperated into the parking brake control.

The master cylinder is of a tandem design and is linked to a brake booster to reduce the brake pedal effort. On 2.0L variants a vacuum pump is fitted to ensure assistance in certain circumstances. The tandem design will make sure that in the event of one brake circuit failure the other will remain fully operational. The booster operating rod is connected directly to the brake pedal.

Published: 11-May-2011

Brake System - General Information - Brake System

Diagnosis and Testing

Principles of Operations

The brake system operates by transferring effort applied to the brake pedal, by the driver, to the brakes at each wheel.

The braking effort is distributed to each wheel, using a hydraulic system. The system is assisted using a vacuum brake booster that reduces pedal effort for a given hydraulic pressure. The parking brake operates on the rear wheels and is applied using a hand operated control.

Inspection and Verification

• NOTE: Prior to carrying out any diagnosis, make sure that the brake system warning indicator is functional.

Visually examine the front and rear tire and wheel assemblies for damage such as uneven wear patterns, tread worn out or sidewall damage.Verify the tires are the same size, type and, where possible, same manufacture.Replace the damaged wheel or excessively worn tire. For additional information, refer to
REFER to: Wheel and Tire (204-04 Wheels and Tires, Removal and Installation).
.

Wheels and tires must be cleared of any foreign matter and tire pressures adjusted to the correct specification.

If the tires exhibit uneven wear or feathering, the cause must be corrected. Check the steering and suspension components for damage or wear, if necessary check and adjust the front wheel alignment. For additional information, refer to
REFER to: Front Toe Adjustment (204-00 Suspension System - General Information, General Procedures).
.

Road Test

Visual Inspection Chart

Mechanical	Electrical
Brake master cylinder	Parking brake switch
Brake caliper piston(s)	Damaged or corroded wiring harness
Brake discs	Brake master cylinder fluid level switch
Wheel bearings	Vacuum pump controller
Brake pads	Pedal box switches
Power brake booster	
Brake pedal linkage	
Booster vacuum hose	
Tires	
Debris	
Modulator	
Vacuum pump	

Carry out a road test to compare actual vehicle braking performance with the performance standards expected by the driver. The ability of the test driver to make valid comparisons and detect performance deficiencies will depend on experience.

The driver should have a thorough knowledge of brake system operation and accepted general performance guidelines to make good comparisons and detect performance concerns.

An experienced brake technician will always establish a route that will be used for all brake diagnosis road tests. The roads selected will be reasonably smooth and level. Gravel or bumpy roads are not suitable because the surface does not allow the tires to grip the road equally. Crowned roads should be avoided because of the large amount of weight shifted to the low set of wheels on this type of road. Once the route is established and consistently used, the road surface variable can be eliminated from the test results.

Before a road test, obtain a complete description of the customer concerns or suspected condition. From the description, the technician's experience will allow the technician to match possible causes with symptoms. Certain components will be tagged as possible suspects while others will be eliminated by the evidence. More importantly, the customer description can reveal unsafe conditions which should be checked or corrected before the road test. The description will also help form the basic approach to the road test by narrowing the concern to specific components, vehicle speed or conditions.

Begin the road test with a general brake performance check. Keeping the description of the concern in mind, test the brakes at different vehicle speeds using both light and heavy pedal pressure. To determine if the concern is in the front or rear braking system, use the brake pedal and then use the parking brake control. If the condition (pull, vibration, pulsation) occurs only with the parking brake, the concern is in the rear brake system.

If the concern becomes evident during this check, verify it fits the description given before the road test. If the concern is not evident, attempt to duplicate the condition using the information from the description.

If a concern exists, use the Symptom Chart in order to isolate it to a specific sub-system and condition description. From this description, a list of possible sources can be used to further narrow the cause to a specific component or condition.

Symptom Chart

Symptom	Possible Sources	Action
Brakes noisy	* Brake pads. * Brake discs.	* GO to Pinpoint Test A.
Vibration when brakes are applied	* Wheels require balancing. * Wheel hub nuts. * Caliper mounting bolts. * Brake pads. * Foreign material/scratches /corrosion on brake disc contact surfaces. * Excessive brake disc thickness variation. * Excessive brake disc runout. * Wheel bearing wear or failure. * Suspension bush wear or failure. * Steering bush wear or failure.	* Go to Pinpoint Test B.

The brakes pull or drift	* Tire pressures/wear. * Calipers. * Brake pads. * Brake discs. * Wheel alignment adjustment. * Wheel bearing. * Suspension bushes and ball joints.	* GO to Pinpoint Test C.
The pedal feels spongy	* Air in brake system. * Leak in hydraulic system. * Brake booster/master cylinder. * Brake pads.	* GO to Pinpoint Test D.
The pedal goes down fast	* Air in brake system. * Leak in hydraulic system. * Brake booster/master cylinder. * Brake pads.	* GO to Pinpoint Test E.
The pedal goes down slowly	* Air in brake system. * Brake booster/master cylinder.	* Go to Pinpoint Test F.
Excessive brake pedal effort	* Brake pads. * Brake booster. * Vacuum pump.	* GO to Pinpoint Test G.
Brake lockup during light brake pedal force	* Brake pads. * Calipers.	* GO to Pinpoint Test H.
Brakes drag	* Parking brake control applied/malfunction. * Seized parking brake cables. * Seized caliper slide pins. * Seized caliper. * Brake booster. * Pedal gear.	* GO to Pinpoint Test I.
Excessive/Erratic brake pedal travel	* Hydraulic system. * Brake pads. * Brake discs. * Hub and bearing assembly.	* GO to Pinpoint Test J.
The red brake warning indicator is always on	* Fluid level.	* FILL the system to specification. CHECK for leaks.
	* Brake fluid level sensor.	* INSTALL a new brake master cylinder fluid reservoir. For additional information, refer to REFER to: Brake Master Cylinder (206-06 Hydraulic Brake Actuation, Removal and Installation). .
	* Parking brake control.	* RELEASE and ADJUST the parking brake. For additional information, refer to REFER to: Parking Brake Cable Adjustment - Vehicles With: Manually Adjusted Parking Brake, VIN Range: D55322->E24053 (206-05 Parking Brake and Actuation, General Procedures). .
	* Electrical circuit.	* For additional information, refer to the approved Jaguar diagnostic system for analysis/rectification of the concern.
Slow or incomplete brake pedal return	* Brake pedal binding. * Brake booster/master cylinder.	* GO to Pinpoint Test K.

PINPOINT TEST A : BRAKES NOISY	
TEST CONDITIONS	**DETAILS/RESULTS/ACTIONS**
A1: INSPECT BRAKE PADS	
	1 Inspect the condition of the front and rear brake pads. Check for damage to any anti-squeal shims.
	Are the brake pads OK? **Yes** GO to A2. **No** CLEAN the front brake pads or INSTALL new front brake pads if necessary. For additional information, refer to REFER to: Brake Pads (206-03 Front Disc Brake, Removal and Installation). . CLEAN the rear brake pads or INSTALL new rear brake pads if necessary. For additional information, refer to REFER to: Brake Pads (206-04 Rear Disc Brake, Removal and Installation). .Test vehicle for presence of brake squeal.
A2: INSPECT BRAKE DISCS	
	1 Inspect the brake discs for excessive corrosion, wear or disc thickness variation.
	Does excessive corrosion, wear or disc thickness variation exist? **Yes** INSTALL new front brake discs and brake pads. For additional information, refer to REFER to: Brake Disc (206-03 Front Disc Brake, Removal and Installation). . INSTALL new rear brake discs and brake pads. For additional information, refer to REFER to: Brake Disc (206-04 Rear Disc Brake, Removal and Installation). . TEST the system for normal operation. **No** Vehicle is OK.

PINPOINT TEST B : VIBRATION WHEN BRAKES ARE APPLIED	
TEST CONDITIONS	**DETAILS/RESULTS/ACTIONS**
B1: ROAD TEST VEHICLE	
	1 Road test the vehicle between 40-80 km/h (25-50 mph) without applying brakes.
	Is the vibration present? **Yes** TEST for noise vibration and harshness. For additional information, refer to REFER to: Noise, Vibration and Harshness (NVH) (100-04 Noise, Vibration and Harshness, Diagnosis and Testing). . REPEAT road test if necessary. **No** GO to B2.
B2: CHECK FOR BRAKE VIBRATION	
	1 Road test the vehicle between 40-80 km/h (25-50 mph) with light and medium application on the brake pedal.

	Is a vibration present? **Yes** CHECK the brake caliper mounting bolts and wheel hub nuts and TIGHTEN as necessary. CHECK the balance of all road wheels and REPAIR as necessary. CHECK the brake discs for excessive wear, runout, thickness variation or cracks. For additional information refer to REFER to: Front Disc Brake (206-03 Front Disc Brake, Diagnosis and Testing). INSTALL new brake discs and brake pads as necessary. GO to B3. **No** Vehicle is OK.
B3: IS VIBRATION STILL PRESENT UNDER BRAKE APPLICATION?	
	1 Road test the vehicle between 40-80 km/h (25-50 mph) with light and medium application on the brake pedal.
	Is a vibration present? **Yes** CHECK for wear or failure of steering bushes. For additional information, refer to REFER to: Power Steering (211-02 Power Steering, Diagnosis and Testing). . CHECK for wear or failure of steering ball joints. For additional information, refer to REFER to: Steering Linkage (211-03 Steering Linkage, Diagnosis and Testing). . CHECK for wear or failure of front wheel bearings, suspension bushes and ball joints. For additional information, refer to REFER to: Front Suspension (204-01 Front Suspension, Diagnosis and Testing). . CHECK for wear or failure of rear wheel bearings, suspension bushes and ball joints. For additional information, refer to REFER to: Rear Suspension (204-02 Rear Suspension, Diagnosis and Testing). . **No** Vehicle is OK.

PINPOINT TEST C : THE BRAKES PULL OR DRIFT	
TEST CONDITIONS	**DETAILS/RESULTS/ACTIONS**
C1: ROAD TEST VEHICLE	
	1 Road test the vehicle and apply the brake pedal.
	Does the vehicle pull or drift? **Yes** GO to C2. **No** Vehicle is OK.
C2: INSPECT TIRE PRESSURE	
	1 Check for excessive tire wear or incorrect pressures.
	Are the tires at the correct pressure and in good condition? **Yes** GO to C3. **No** ADJUST the tire pressures or INSTALL new tires if excessively worn. TEST the system for normal operation.
C3: CHECK CALIPERS	
	1 Check the front caliper pistons for binding, leaking or sticking. For additional information, refer to REFER to: Front Disc Brake (206-03 Front Disc Brake, Diagnosis and Testing). . Check the rear caliper pistons for binding, leaking or sticking. For additional information, refer to REFER to: Rear Disc Brake (206-04 Rear Disc Brake, Diagnosis and Testing). .
	Do the disc brake caliper pistons and pins bind, leak or stick? **Yes** INSTALL new calipers as necessary. TEST the system for normal operation. **No** GO to C4.
C4: INSPECT BRAKE DISCS	
	1 Check the brake discs for excessive damage, thickness variation or runout. For additional information, refer to REFER to: Front Disc Brake (206-03 Front Disc Brake, Diagnosis and Testing). .
	Does excessive damage or runout exist? **Yes** INSTALL new brake discs and brake pads as necessary.TEST the system for normal operation. **No** GO to C5.
C5: INSPECT THE FRONT HUB AND WHEEL BEARING ASSEMBLY	
	1 Check the front hub and wheel bearing assembly. For additional information, refer to REFER to: Wheel Bearing Inspection (204-00 Suspension System - General Information, General Procedures). .
	Are the wheel bearings OK? **Yes** GO to C6. **No** INSTALL new wheel bearings. For additional information, refer to REFER to: Front Wheel Bearing and Wheel Hub (204-01 Front Suspension, Removal and Installation). .TEST the system for normal operation.
C6: CHECK SUSPENSION BUSHES AND BALL JOINTS.	
	1 Check all suspension bushes and ball joints.
	Are the suspension bushes and ball joints OK? **Yes** GO to C7. **No** INSTALL new front suspension bushes and ball joints as required. For additional information, refer to REFER to: Front Stabilizer Bar Bushing (204-01 Front Suspension, Removal and Installation). . INSTALL new rear suspension bushes and ball joints as required. For additional information, refer to REFER to: Rear Lower Arm (204-02 Rear Suspension, Removal and Installation). .
C7: CHECK VEHICLE ALIGNMENT	
	1 Check the vehicle alignment. For additional information, refer to REFER to: Underbody Misalignment Check (502-00 Uni-Body, Subframe and Mounting System, General Procedures). .

	Is the alignment within specification? **Yes** Vehicle is OK. **No** Adjust the alignment as necessary. For additional information, refer to REFER to: Underbody Misalignment Check (502-00 Uni-Body, Subframe and Mounting System, General Procedures). .

PINPOINT TEST D : THE PEDAL FEELS SPONGY	
TEST CONDITIONS	**DETAILS/RESULTS/ACTIONS**
D1: CHECK FOR SPONGY PEDAL (IGNITION OFF)	
	1 Check for a firm brake pedal.
	Is the brake pedal effort and brake pedal travel normal? **Yes** Vehicle is OK. **No** GO to D2.
D2: CHECK BRAKE PEDAL RESERVE (IGNITION OFF)	
	1 Pump the brake pedal 10 times and hold on the final application.
	Does the brake pedal feel firm on final application? **Yes** GO to D3. **No** BLEED the brake system. For additional information, refer to REFER to: Brake System Bleeding (206-00 Brake System - General Information, General Procedures). .TEST the system for normal operation.
D3: CHECK BRAKE PEDAL RESERVE (ENGINE ON)	
	1 Engine is idle.
	2 Apply the brake pedal lightly three or four times.
	3 Wait 15 seconds for the vacuum to recover.
	4 Push down on the brake pedal until it stops moving downward or an increased resistance to the brake pedal travel occurs.
	5 Hold the brake pedal in the applied position while increasing the engine speed to 2000 revs/min.
	6 Release the accelerator pedal.
	Does the brake pedal move downward as the engine speed returns to idle? **Yes** GO to D4. **No** CHECK the vacuum to brake booster. For additional information, refer to REFER to: Brake Booster - RHD AWD/RHD FWD (206-07 Power Brake Actuation, Removal and Installation). .
D4: CHECK BRAKE FLUID LEVEL	
	1 Check the brake master cylinder reservoir fluid level.
	Is the fluid level OK? **Yes** BLEED the brake system. For additional information, refer to REFER to: Brake System Bleeding (206-00 Brake System - General Information, General Procedures). .TEST the system for normal operation. **No** CHECK the brake master cylinder reservoir sealing points. For additional information, refer to Brake Master Cylinder Component Test in this section. ADD fluid and BLEED the brake system. For additional information, refer to REFER to: Brake System Bleeding (206-00 Brake System - General Information, General Procedures). .TEST the system for normal operation. REPEAT road test if necessary.

PINPOINT TEST E : THE PEDAL GOES DOWN FAST	
TEST CONDITIONS	**DETAILS/RESULTS/ACTIONS**
E1: ROAD TEST VEHICLE	
	1 Road test and apply the brake pedal.
	Is the brake pedal effort and brake pedal travel normal? **Yes** Vehicle is OK. **No** GO to E2.
E2: CHECK BRAKE FLUID LEVEL	
	1 Check the brake master cylinder reservoir fluid level.
	Is the fluid level within specification? **Yes** GO to E3. **No** CHECK the brake master cylinder reservoir sealing points. For additional information, refer to Brake Master Cylinder Component Test in this section. ADD fluid and BLEED the brake system. For additional information, refer to REFER to: Brake System Bleeding (206-00 Brake System - General Information, General Procedures). .TEST the system for normal operation. REPEAT road test if necessary.
E3: CHECK BRAKE PEDAL TRAVEL-PRESSURIZE SYSTEM (IGNITION OFF)	
	1 Pump the brake pedal rapidly (five times).
	Does the brake pedal travel build up and then hold? **Yes** BLEED the brake system. Refer to REFER to: Brake System Bleeding (206-00 Brake System - General Information, General Procedures). . TEST the system for normal operation. REPEAT road test. For additional information, refer to REFER to: Hydraulic Brake Actuation (206-06 Hydraulic Brake Actuation, Diagnosis and Testing). . **No** GO to E4.
E4: CHECK FOR BRAKE SYSTEM LEAKS	

	1 Check for external brake system leaks. For additional information, refer to Master Cylinder in this section.
	Are leaks found? **Yes** REPAIR as necessary, ADD fluid and BLEED brake system. For additional information, refer to REFER to: Brake System Bleeding (206-00 Brake System - General Information, General Procedures). .TEST the system for normal operation. REPEAT road test. **No** System is OK.

PINPOINT TEST F : THE PEDAL GOES DOWN SLOWLY	
TEST CONDITIONS	**DETAILS/RESULTS/ACTIONS**
F1: ROAD TEST VEHICLE - CHECK BRAKE PEDAL OPERATION	
	1 Check if the condition occurs during actual stopping application by applying the brake pedal while the vehicle is moving.
	Does the condition occur when the vehicle is moving? **Yes** GO to F2. **No** GO to F3.
F2: CHECK FOR BRAKE SYSTEM LEAKS	
	1 Check for external brake system leaks. For additional information, refer to Master Cylinder in this section.
	Are there any external brake system leaks? **Yes** REPAIR as necessary. ADD fluid and BLEED the brake system. For additional information, refer to REFER to: Brake System Bleeding (206-00 Brake System - General Information, General Procedures). .TEST the system for normal operation. **No** GO to F3.
F3: CARRY OUT A BRAKE MASTER CYLINDER BYPASS TEST	
	1 Test for brake master cylinder bypass condition. Refer to Brake Master Cylinder Component Test in this section.
	Are any concerns found? **Yes** INSTALL a new brake master cylinder, ADD fluid and BLEED the brake system. For additional information, refer to REFER to: Brake System Bleeding (206-00 Brake System - General Information, General Procedures). .TEST the system for normal operation. **No** System is OK.

PINPOINT TEST G : EXCESSIVE BRAKE PEDAL EFFORT	
TEST CONDITIONS	**DETAILS/RESULTS/ACTIONS**
G1: CHECK BRAKE PADS	
	1 Check the brake pads for wear, contamination, correct installation, damage and type.
	Are any concerns found? **Yes** INSTALL the front brake pads correctly or INSTALL new front brake pads if necessary. For additional information, refer to REFER to: Brake Pads (206-03 Front Disc Brake, Removal and Installation). .INSTALL the rear brake pads correctly or INSTALL new rear brake pads if necessary. For additional information, refer to REFER to: Brake Pads (206-04 Rear Disc Brake, Removal and Installation). .REPEAT road test. **No** GO to G2.
G2: CHECK VACUUM	
	1 Disconnect the vacuum booster hose from the booster.
	2 Connect a vacuum/pressure tester to the vacuum hose.
	3 Run the engine at normal operating temperature.
	4 Record the vacuum reading.
	Is the reading 40.5kPa (12 in-Hg) or greater? **Yes** GO to G3. **No** LOCATE and REPAIR the source of low vacuum. TEST the system for normal operation.
G3: INSPECT SYSTEM	
	1 Switch the engine off.
	2 Reconnect the vacuum hose.
	3 Inspect the brake booster, rubber grommet and all vacuum plumbing for cracks, holes, damaged connections or missing clamps.
	4 Pump the brake pedal several times to release the vacuum. Push down on the brake pedal and hold.
	Does the brake pedal move down when the engine is started? **Yes** Vacuum system is OK. **No** GO to G4.
G4: CHECK POWER BRAKE BOOSTER VALVE	
	1 Check the brake booster and vacuum pump valves. For additional information, refer to Brake Booster in this section.
	Is the power brake booster and vacuum pump valve OK? **Yes** CHECK the brake booster. For additional information, refer to Brake Booster in this section. INSTALL a new brake booster if necessary. TEST the system for normal operation. **No** INSTALL a new brake booster valve and vacuum pump valve. TEST the system for normal operation.

PINPOINT TEST H : BRAKE LOCKUP DURING LIGHT BRAKE PEDAL FORCE

TEST CONDITIONS	DETAILS/RESULTS/ACTIONS
H1: TEST BRAKE LOCKUP	
	1 Road test the vehicle and apply the brake pedal lightly.
	Do the brakes lockup? **Yes** GO to H2. **No** Vehicle is OK.
H2: INSPECT BRAKE PADS	
	1 Inspect brake pads for contamination, correct installation, damage and type.
	Are any concerns found? **Yes** CHECK the front brake pads. For additional information, refer to REFER to: Front Disc Brake (206-03 Front Disc Brake, Description and Operation). .CHECK the rear brake pads. For additional information, refer to REFER to: Rear Disc Brake (206-04 Rear Disc Brake, Description and Operation). .INSTALL new brake pads as necessary.REPEAT road test. **No** GO to H3.
H3: INSPECT BRAKE CALIPERS	
	1 Inspect brake calipers for binding, leaking or sticking.
	Are any concerns found? **Yes** CHECK the front brake calipers. For additional information, refer to REFER to: Front Disc Brake (206-03 Front Disc Brake, Diagnosis and Testing). .CHECK the rear brake calipers. For additional information, refer to REFER to: Rear Disc Brake (206-04 Rear Disc Brake, Diagnosis and Testing). .INSTALL the brake calipers correctly or INSTALL new brake calipers as necessary. TEST the system for normal operation. REPEAT road test if necessary. **No** Vehicle is OK.

PINPOINT TEST I : BRAKES DRAG

TEST CONDITIONS	DETAILS/RESULTS/ACTIONS
I1: ROAD TEST VEHICLE	
	1 Road test the vehicle and apply the brakes.
	Are the brakes functioning correctly? **Yes** Vehicle is OK. **No** GO to I2.
I2: CHECK CALIPERS	
	1 Check the front caliper pistons for binding, leaking or sticking. For additional information, refer to REFER to: Front Disc Brake (206-03 Front Disc Brake, Diagnosis and Testing). . Check the rear caliper pistons for binding, leaking or sticking. For additional information, refer to REFER to: Rear Disc Brake (206-04 Rear Disc Brake, Diagnosis and Testing). .
	Do the disc brake caliper pistons and pins bind, leak or stick? **Yes** INSPECT the brake calipers and parking brake cables. INSTALL new components as necessary. Road test vehicle. **No** GO to I3.
I3: CHECK BRAKE BOOSTER	
	1 Check the brake booster connecting rod alignment and travel. For additional information, refer to REFER to: Power Brake System (206-07 Power Brake Actuation, Diagnosis and Testing). .
	Is the connecting rod OK? **Yes** Vehicle is OK. **No** INSTALL a new brake booster. For additional information, refer to REFER to: Brake Booster - RHD AWD/RHD FWD (206-07 Power Brake Actuation, Removal and Installation). . TEST the system for normal operation.

PINPOINT TEST J : EXCESSIVE/ERRATIC BRAKE PEDAL TRAVEL

TEST CONDITIONS	DETAILS/RESULTS/ACTIONS
J1: TEST ON ROUGH ROAD	
	1 Road test the vehicle on rough road conditions.
	2 Apply the brakes slowly.
	Is the brake pedal effort and brake pedal travel normal? **Yes** Vehicle is OK. **No** GO to J2.
J2: CHECK BRAKE FLUID LEVEL	
	1 Check the brake master cylinder reservoir fluid level.
	Is the fluid level OK? **Yes** GO to J3. **No** CHECK brake master cylinder reservoir sealing points. For additional information, refer to Brake Master Cylinder in this section. ADD brake fluid and BLEED the brake system. For additional information, refer to REFER to: Brake System Bleeding (206-00 Brake System - General Information, General Procedures). .TEST the system for normal operation. REPEAT road test if necessary.
J3: CHECK BRAKE PEDAL RESERVE	
	1 Engine is idle.

	2 Apply the brake pedal lightly three or four times.
	3 Wait 15 seconds for the vacuum to replenish.
	4 Push down on the brake pedal until it stops moving downward or an increased resistance to the brake pedal travel occurs.
	5 Hold the brake pedal in the applied position while increasing the engine speed to 2000 revs/min.
	6 Release the accelerator pedal.
	Does the brake pedal move downward as the engine speed returns to idle? **Yes** GO to J4. **No** CHECK the vacuum to the brake booster. For additional information, refer to REFER to: Power Brake System (206-07 Power Brake Actuation, Diagnosis and Testing). .
J4: CHECK THE FRONT HUB AND BEARING ASSEMBLY	
	1 Check the front hub and bearing assembly. For additional information, refer to REFER to: Front Suspension (204-01 Front Suspension, Diagnosis and Testing). .
	Are the front wheel bearings loose? **Yes** INSTALL a new front wheel bearing if damaged. For additional information, refer to REFER to: Front Wheel Bearing and Wheel Hub (204-01 Front Suspension, Removal and Installation). . TEST the system for normal operation. **No** CHECK the front brake discs for thickness variances. For additional information, refer to REFER to: Brake Disc Runout Check (206-00 Brake System - General Information, General Procedures). .

PINPOINT TEST K : SLOW OR INCOMPLETE BRAKE PEDAL RETURN	
TEST CONDITIONS	**DETAILS/RESULTS/ACTIONS**
K1: CHECK FOR BRAKE PEDAL RETURN	
	1 Run the engine at fast idle while making several brake applications.
	2 Pull the brake pedal rearward with approximately 44 N force.
	3 Release the brake pedal and measure the distance to the toe board.
	4 Make a hard brake application.
	5 Release the brake pedal and measure the brake pedal to toe board distance. The brake pedal should return to its original position.
	Does the brake pedal return to its original position? **Yes** Vehicle is OK. **No** GO to K2.
K2: CHECK FOR BRAKE PEDAL BINDING	
	1 Check the brake pedal to make sure it is operating OK.
	Is the brake pedal operating OK? **Yes** INSTALL a new brake booster. For additional information, refer to REFER to: Brake Booster - RHD AWD/RHD FWD (206-07 Power Brake Actuation, Removal and Installation). .TEST the system for normal operation. **No** REPAIR or INSTALL new brake pedal. TEST the system for normal operation.

Component Tests

Brake Booster

1. **1.** Check all hoses and connections. All unused vacuum connectors should be capped. Hoses and their connections should be correctly secured and in good condition with no holes and no collapsed areas. Inspect the valve on the brake booster for damage.

2. **2.** Check the hydraulic brake system for leaks or low fluid.

3. **3.** With the transmission in PARK (automatic transmissions) or in NEUTRAL (manual transmissions), stop the engine and apply the parking brake. Pump the brake pedal several times to exhaust all vacuum in the system.

4. **4.** With the engine switched off and all vacuum in the system exhausted, apply the brake pedal and hold it down. Start the engine. If the vacuum system is operating, the brake pedal will tend to move downward under constant foot pressure. If no motion is felt, the vacuum booster system is not functioning.

5. **5.** Remove the vacuum hose from the brake booster. Manifold vacuum should be available at the brake booster end of the hose with the engine at idle speed and the transmission in PARK or NEUTRAL. Make sure that all unused vacuum outlets are correctly capped, hose connectors are correctly secured and vacuum hoses are in good condition. When it is established that manifold vacuum is available to the brake booster, connect the vacuum hose to the brake booster and repeat Step 3. If no downward movement of the brake pedal is felt, install a new brake booster.

6. **6.** Operate the engine for a minimum of 10 seconds at a fast idle. Stop the engine and allow the vehicle to stand for 10 minutes. Then, apply the brake pedal with approximately 89 N of force. The pedal feel (brake application) should be the same as that noted with the engine running. If the brake pedal feels hard (no power assist), install a new valve and then repeat the test. If the brake pedal still feels hard, install a new brake booster. If the brake pedal movement feels spongy, bleed the brake system. For additional information, refer to
REFER to: Brake System Bleeding (206-00 Brake System - General Information, General Procedures).
in this section.

Brake Master Cylinder

Usually, the first and strongest indicator of anything wrong in the brake system is a feeling through the brake pedal. In diagnosing the condition of the brake master cylinder, check pedal feel as evidence of a brake concern. Check for brake warning lamp illumination and the brake fluid level in the brake master cylinder reservoir.

Normal Conditions

The following conditions are considered normal and are not indications that the brake master cylinder is in need of repair.

- New brake systems are designed to produce a pedal effort that is not as hard as in the past. Complaints of light pedal efforts should be compared to the pedal efforts of another vehicle of the same model and year.
- The fluid level will fall with brake pad wear.

Abnormal Conditions

• NOTE: Prior to carrying out any diagnosis, make sure the brake system warning indicator is functional.

Changes in the brake pedal feel or brake pedal travel are indicators that something could be wrong in the brake system. The diagnostic procedure and techniques use brake pedal feel, warning indicator illumination and low brake fluid level as indicators to diagnosing brake system concerns. The following conditions are considered abnormal and indicate that the brake master cylinder is in need of repair:

- Brake pedal goes down fast. This could be caused by an external or internal leak.
- Brake pedal goes down slowly. This could be caused by an internal or external leak.
- Brake pedal is low or feels spongy. This condition may be caused by no fluid in the brake master cylinder, reservoir cap vent holes clogged or air in the hydraulic system.
- Brake pedal effort is excessive. This may be caused by a bind or obstruction in the pedal/linkage, a faulty non return valve, booster or insufficient booster vacuum.
- Rear brakes lock up during light pedal force. This may be caused by damaged brake pads, an incorrectly adjusted parking brake, a partially applied parking brake, a damaged ABS sensor or bearing failure.
- Brake pedal effort erratic. This condition could be caused by the brake booster or incorrectly installed brake pads.
- Brake warning indicator is on. This may be caused by low fluid level or float assembly damaged.

Non Pressure Leaks

Any reduced fluid volume in the brake master cylinder reservoir condition may be caused by two types of pressure external leaks.

Type 1: An external leak may occur at the master cylinder reservoir cap because of incorrect positioning of gasket and cap. Reposition cap and gasket.

Type 2: An external leak may occur at the reservoir mounting seals. Repair such a leak by installing new seals and make sure that the reservoir retaining pin is correctly installed.

Type 3: An external leak may occur in the manual transmission clutch operating system. For additional information, refer to
REFER to: Manual Transmission and Clutch (308-00 Manual Transmission/Transaxle and Clutch - General Information, Diagnosis and Testing).

Brake System - General Information - Brake Disc Runout Check

General Procedures

Check

1. Raise and support the vehicle.
   For additional information, refer to: Lifting (100-02 Jacking and Lifting, Description and Operation).
2. Remove the wheel and tire assembly.
   For additional information, refer to: Wheel and Tire (204-04 Wheels and Tires, Removal and Installation).
3. Remove the front brake calipers.
   For additional information, refer to: Brake Caliper (206-03 Front Disc Brake, Removal and Installation).
   Or remove the rear brake calipers.
   For additional information, refer to: Brake Caliper (206-04 Rear Disc Brake, Removal and Installation).
4. Install all wheel nuts and tighten equally to 20 Nm.
   - Make sure that the disc is fully seated against the hub face.
5. Install a dial test indicator gauge and holding fixture to a suitable mounting point.
6. NOTE: If the runout is outside specification, check the hub face runout.

   Using the dial test indicator with a suitable adaptor, measure the inner and outer faces of the disc.

   1. Position the gauge so that it contacts the disc 10 mm from the outer edge.
   2. Slowly rotate the hub/disc assembly. Note the reading range.
7. If a front hub runout check is required, remove the front brake disc.
   For additional information, refer to: Brake Disc (206-03 Front Disc Brake, Removal and Installation).
   If a rear hub runout check is required, remove the rear brake disc. For additional information, refer to
   For additional information, refer to: Brake Disc (206-04 Rear Disc Brake, Removal and Installation).
8. NOTE: The hub surface should be free from dirt and corrosion. Do not use abrasive cloths to clean hub faces.

   Using the dial test indicator, measure the hub face runout.

   1. Position the gauge so that it contacts the mounting tube between the stud and the chamfer.
   2. Slowly rotate the hub and note the runout. For additional information, refer to the specification chart.

   - If the front hub runout exceeds the specifications, install a new hub, brake disc and recheck.
     For additional information, refer to: Front Wheel Bearing and Wheel Hub (204-01 Front Suspension, Removal and Installation).
     If the rear hub runout exceeds the specifications, install a new hub, brake disc and recheck.
     For additional information, refer to: Wheel Hub (204-02 Rear Suspension, Removal and Installation).
9. If the front hub face is within specification, install a new disc.
   For additional information, refer to: Brake Disc (206-03 Front Disc Brake, Removal and Installation).
   If the rear hub face is within specification, install a new disc.
   For additional information, refer to: Brake Disc (206-04 Rear Disc Brake, Removal and Installation).
10. Install the wheel and tire assembly.
    For additional information, refer to: Wheel and Tire (204-04 Wheels and Tires, Removal and Installation).

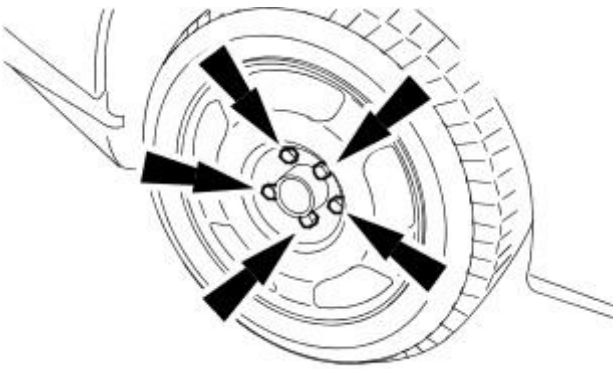

VUJ0002696

Brake System - General Information - Brake System Bleeding

General Procedures

WARNING: Brake Fluid contains polyglycol ethers and polyglycols. Avoid contact with the eyes. Wash hands thoroughly after handling. If brake fluid contacts the eyes, flush the eyes for 15 minutes with cold running water. Get medical attention if irritation persists. If taken internally, drink water and induce vomiting. Get medical attention immediately. Failure to follow these instructions can result in personal injury.

• CAUTIONS:

Make sure that the vehicle is standing on a level surface or supported on a wheel free lift.

If brake fluid is spilt on the paintwork, the affected areas must be immediately washed down with cold water.

• NOTE: The system consists of separate circuits for each front and diagonally opposite rear wheel.Each front to rear circuit and each wheel circuit can be bled individually of each other.

• NOTE: The service ABS hydraulic control unit is supplied pre-filled with brake fluid. Therefore, a conventional bleed procedure should be adequate to remove all the air from the brake system.

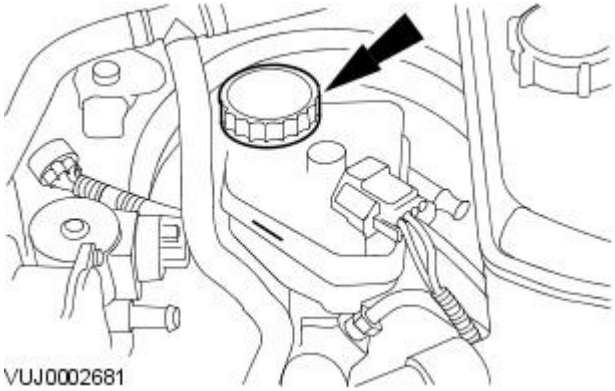

1. CAUTION: Make sure that the filler cap does not become contaminated.

Remove the master cylinder reservoir filler cap.

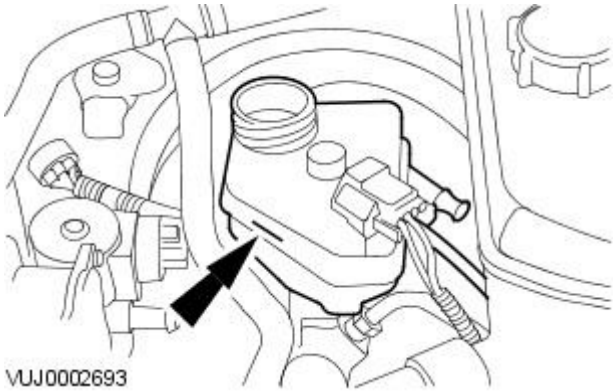

2. NOTE: Always use fluid from a sealed container and dispose of used fluid safely.

Fill up the master cylinder reservoir to the MAX mark as necessary.

3. Install a bleed tube to the rear right-hand brake caliper bleed nipple.

4. Bleed the circuit.

- Make sure the bleed tube is firmly attached to the bleed nipple.
- Submerge the end of the bleed tube in a bleed jar containing a small quantity of approved brake fluid.
- Position the bleed jar base at least 300 mm above the bleed nipple to maintain fluid pressure and prevent air leaking past the bleed nipple threads.
- Open the bleed nipple half a turn.
- Slowly apply the brake pedal to its maximum travel (this forces brake fluid into the bleed jar).
- Close the bleed nipple.
- Return the brake pedal to the rest position.
- Wait 2 seconds to allow the brake fluid to replenish the system.
- Fill up the master cylinder reservoir to the MAX mark as necessary.
- Continue to bleed the circuit until air-free brake fluid is pumped into the jar.
- Fully tighten the bleed nipple.

5. Repeat the procedure for the rear left, front right and front left-hand

brake circuits.

6. Fill up the master cylinder reservoir to the MAX mark.

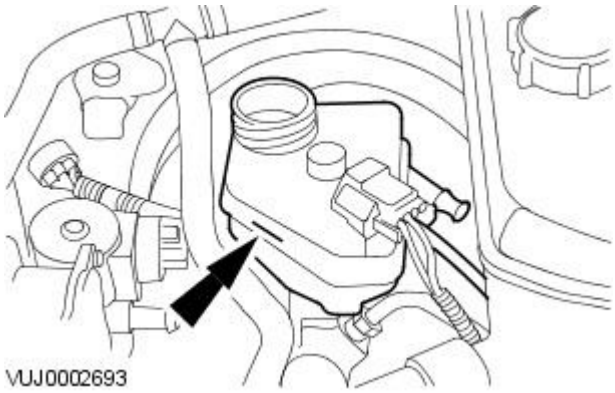

7. Install the master cylinder reservoir cap.

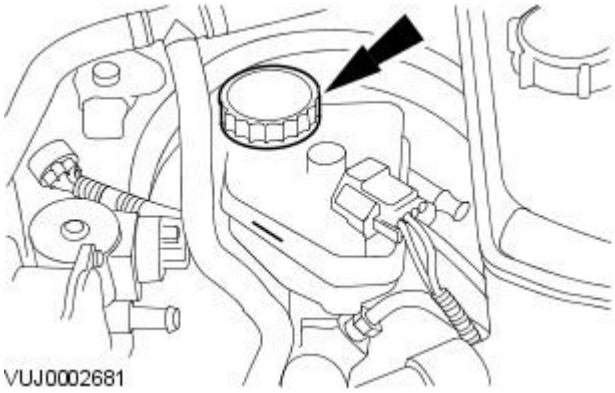

Front Disc Brake -

Lubricants, Fluids, Sealers and Adhesives

CAUTION: Do not use brake fluid ITT Super Dot 4 on 2006my vehicles onwards. Failure to follow this instruction may result in damage to the vehicle.

• NOTE: Brake fluid ITT Super Dot 4 has now been superseded by Shell ESL Super Dot 4 which is the Jaguar recommended brake fluid. Shell ESL Super Dot 4 can be used on all model years.

Item	Specification
Brake fluid	ITT Super Dot 4
Brake fluid	Shell ESL Super Dot 4
Brake caliper slide pin grease	Klueber GLK1

Torque Specifications

Description	Nm	lb-ft	lb-in
Brake pipe union	15	11	-
Brake caliper anchor plate retaining bolts	133	98	-
Brake caliper retaining bolts	30	22	-
Brake hose retaining bracket	40	30	-
Brake hose to brake caliper	10	7	-

Front Disc Brake - Front Disc Brake

Description and Operation

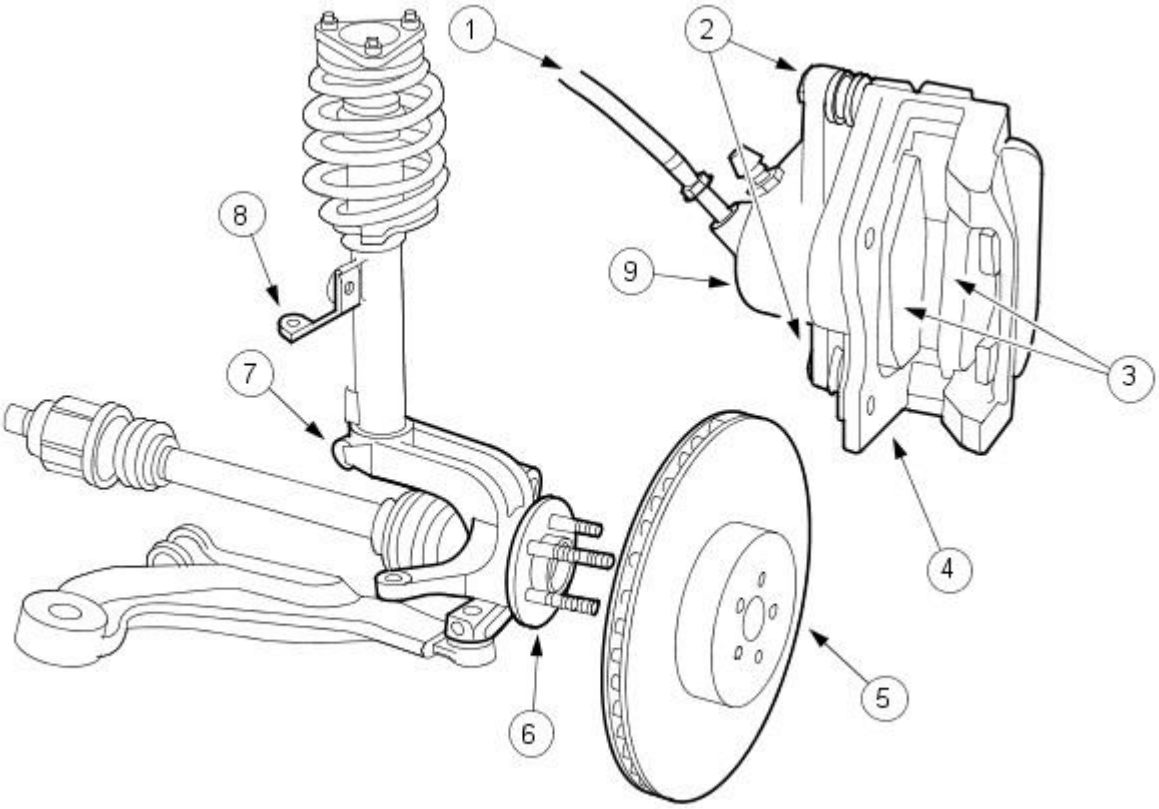

VUJ0002694

Item	Part Number	Description
1	—	Brake hose
2	—	Brake caliper retaining bolts
3	—	Brake pads
4	—	Brake caliper anchor plate
5	—	Brake disc
6	—	Wheel hub
7	—	Wheel knuckle
8	—	Brake hose retaining bracket
9	—	Brake caliper

WARNING: Brake fluid contains polyglycol ethers and polyglycols. Avoid contact with the eyes. Wash hands thoroughly after handling. If brake fluid contacts the eyes, flush the eyes for 15 minutes with cold running water. Get medical attention if irritation persists. If taken internally, drink water and induce vomiting. Get medical attention immediately. Failure to follow these instructions can result in personal injury.

• NOTE: Brake system materials inherently generate heat in order to dissipate energy. As a result, occasional squeal is possible, which may be compounded by severe environmental conditions, such as cold, heat, rain, snow, salt and mud.

The front disc brake system consists of the following components:

- Brake pads.
- Single piston, floating brake calipers.
- Brake discs.
- Brake caliper anchor plates.
- Brake hoses.

The brake caliper has two retaining bolts that attach it to the brake caliper anchor plate. The brake caliper anchor plate is attached to the wheel knuckle with two retaining bolts. The hydraulic system provides separate circuits for each pair of diagonally opposed wheels (i.e. left front, right rear and right front, left rear).

The brake disc is manufactured from cast iron and is of the vented type. It is retained on the wheel hub studs by the wheel and wheel nuts.

The brake calipers are mounted on the wheel knuckles. These are of single, sliding piston type which ensures that equal effort is applied through both brake pads.

Published: 11-May-2011

Front Disc Brake - Front Disc Brake

Diagnosis and Testing

For additional information, refer toSection 206-00 Brake System - General Information.

Front Disc Brake - Brake Caliper

Removal and Installation

Special Tool(s)	
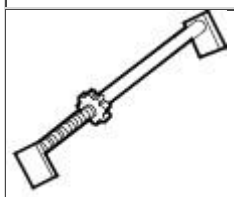 JDS9013	Brake pedal hold-down tool JDS 9013

Removal

1. Remove the wheel and tire. For additional information, refer toSection 204-04 Wheels and Tires.

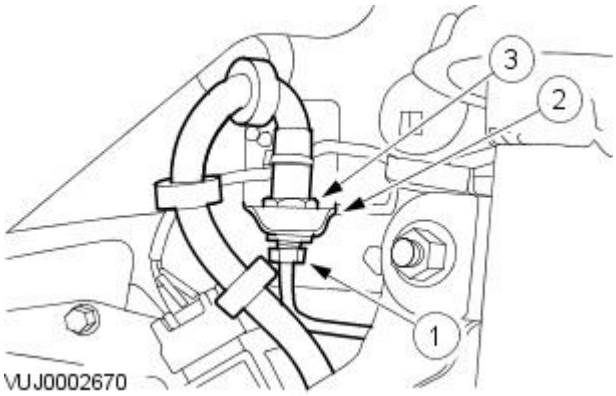

2. CAUTION: If brake fluid is spilt on the paintwork, the affected area must be immediately washed down with cold water.

• NOTE: To prevent the loss of brake fluid, apply the brake pedal hold down tool and adjust to hold the brake pedal down 40mm. Install a bleeder bottle to the bleed nipple and loosen.

Detach the brake hose.

1. Detach the brake pipe.
2. Remove the retaining clip.
3. Detach the brake hose.

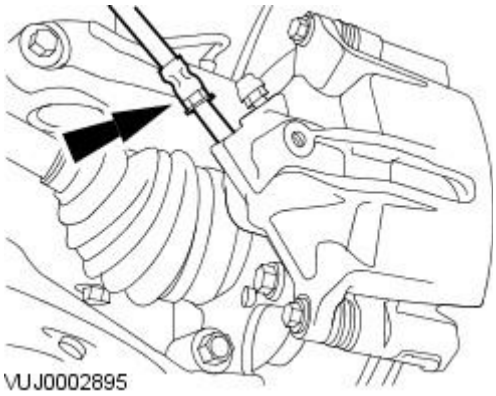

3. Detach the brake hose.

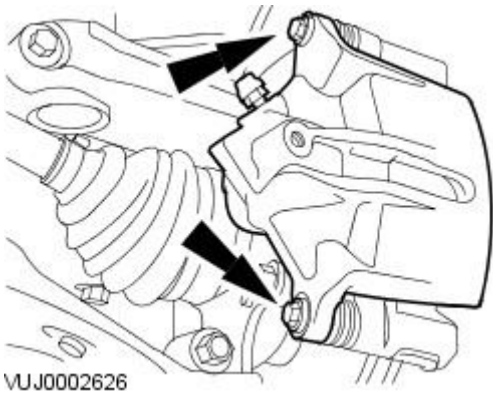

4. NOTE: Tighten the bleed nipple and remove the bleeder tube and bottle.

Remove the brake caliper.

- Remove and discard the brake caliper retaining bolts.

Installation

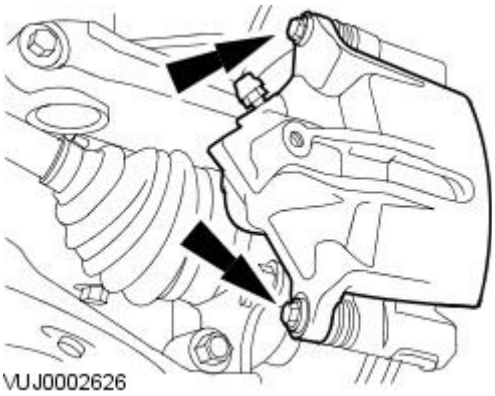

1. CAUTIONS:

If the pistons are pushed back into the housing, brake fluid will be forced out of the inlet port of the brake caliper.

Make sure that the brake disc faces are clean before installation.

• NOTE: Install new brake caliper retaining bolts.

Install the brake caliper.

- Tighten to 30 Nm.

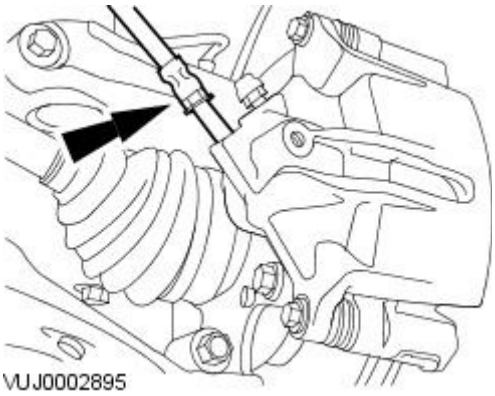

2. Attach the brake hose to the brake caliper.

- Tighten to 10 Nm.

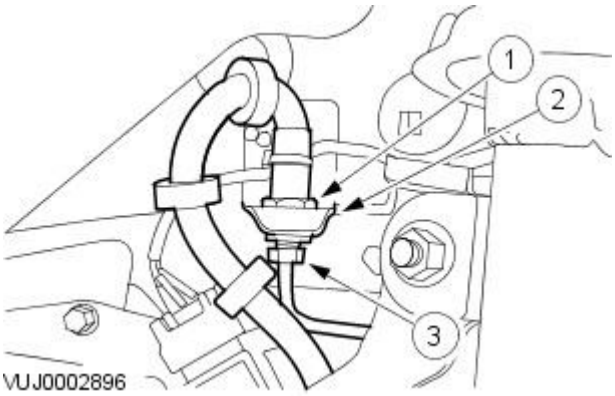

3. Attach the brake hose.

1. Attach the brake hose.
2. Install the retaining clip.
3. Attach the brake pipe.

4. Remove the brake pedal hold down tool.

5. Bleed the brake system. For additional information, refer toSection 206-00 Brake System - General Information.

6. Install the wheel and tire. For additional information, refer to Section 204-04 Wheels and Tires.

Front Disc Brake - Brake Disc

Removal and Installation

Removal

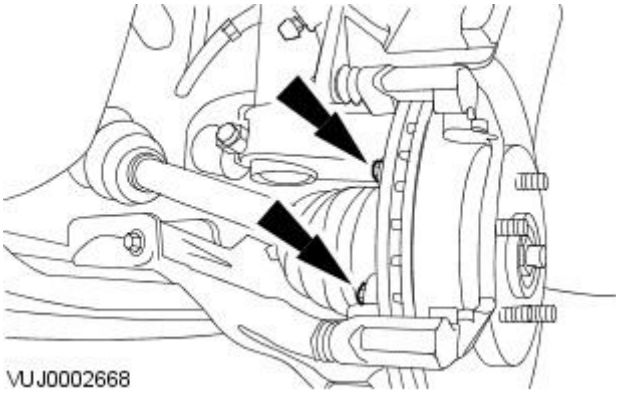

1. Remove the brake pads, refer to the procedure in this section :Pads .
2. Remove and discard the brake caliper anchor plate retaining bolts.

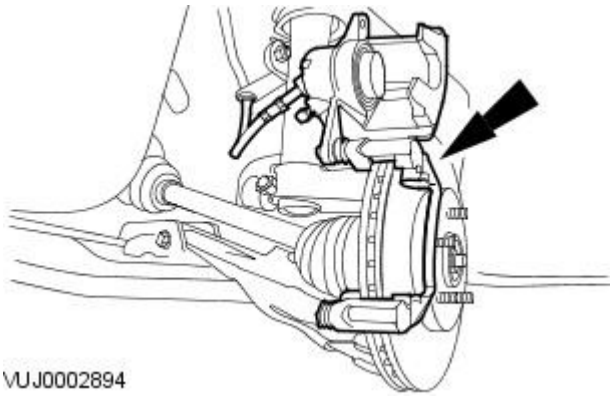

3. Detach the brake caliper, brake caliper anchor plate assembly and secure to one side.

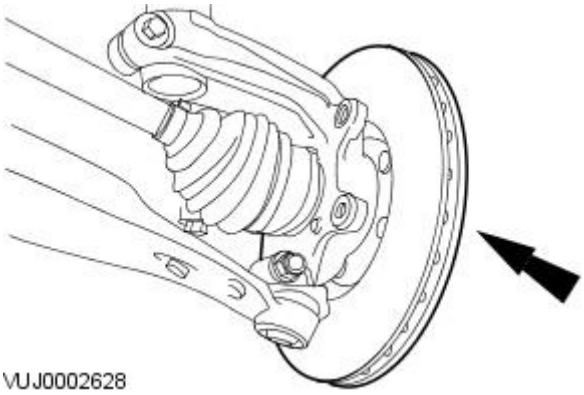

4. NOTE: If the brake disc is being refitted, the tip of a wheel hub stud must be marked with a corresponding part of the brake disc for correct re-alignment.

   Remove the brake disc.

Installation

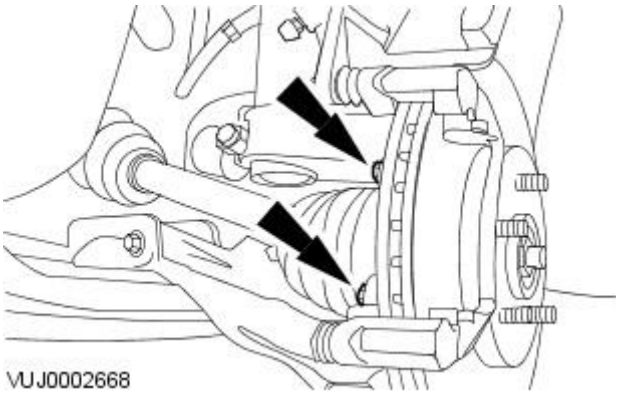

1. NOTE: Install new brake caliper anchor plate retaining bolts.

   To install, reverse the removal procedure.

   - Tighten to 133 Nm.

Front Disc Brake - Brake Pads

Removal and Installation

Removal

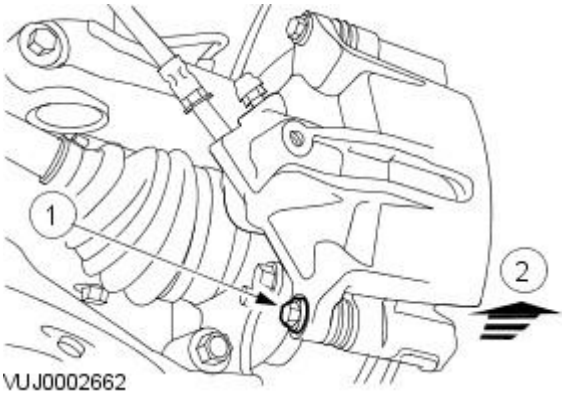

1. Remove the wheel and tire. For additional information, refer toSection 204-04 Wheels and Tires.

2. Pivot the brake caliper upwards.

1. Remove and discard the brake caliper lower retaining bolt.
2. Pivot the brake caliper upwards.

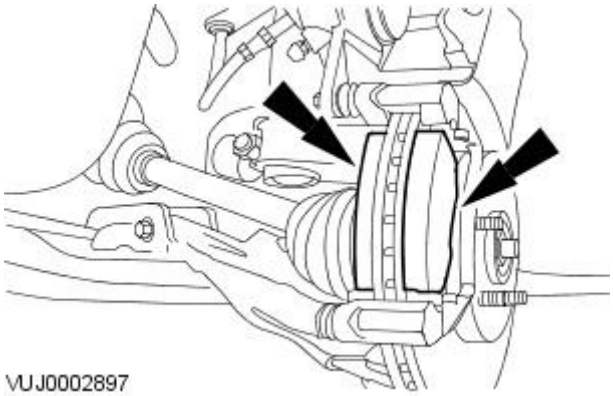

3. Remove the brake pads.

Installation

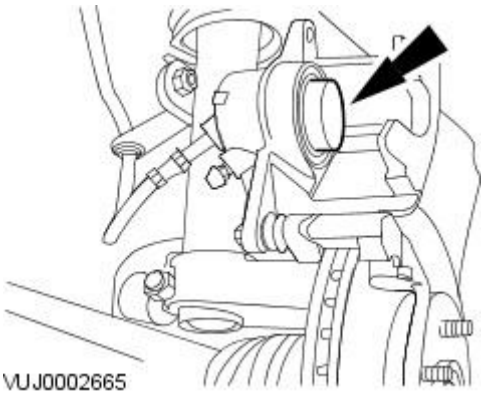

1. CAUTIONS:

If the piston is pushed back into the housing, brake fluid will be forced into the fluid reservoir.

Make sure that the brake disc faces are clean before installation.

Push the piston into the housing.

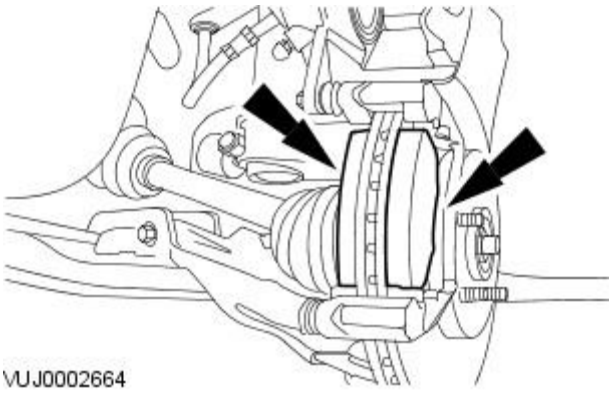

2. Install the brake pads.

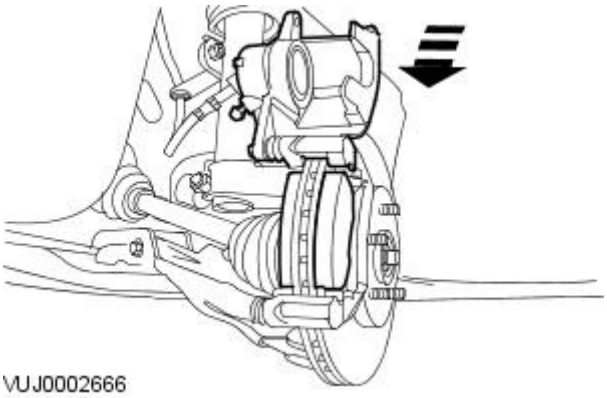

3. Pivot the brake caliper downwards.

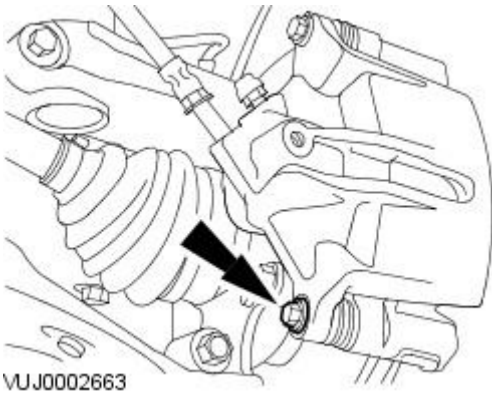

4. Install a new brake caliper lower retaining bolt.

- Tighten to 30 Nm.

5. Install the wheel. For additional information, refer to Section 204-04 Wheels and Tires.

Rear Disc Brake -

Lubricants, Fluids, sealers and Adhesives

CAUTION: Do not use brake fluid ITT Super Dot 4 on 2006my vehicles onwards. Failure to follow this instruction may result in damage to the vehicle.

• NOTE: Brake fluid ITT Super Dot 4 has now been superseded by Shell ESL Super Dot 4 which is the Jaguar recommended brake fluid. Shell ESL Super Dot 4 can be used on all model years.

Item	Specification
Brake fluid	ITT Super Dot 4
Brake fluid	Shell ESL Super Dot 4
Caliper slide pin grease	Dow Corning G807

Torque Specifications

Description	Nm	lb-ft	lb-in
Brake hose union	38	28	-
Brake caliper anchor plate retaining bolt	70	52	-
Brake caliper retaining bolt	32	24	-

Rear Disc Brake - Rear Disc Brake

Description and Operation

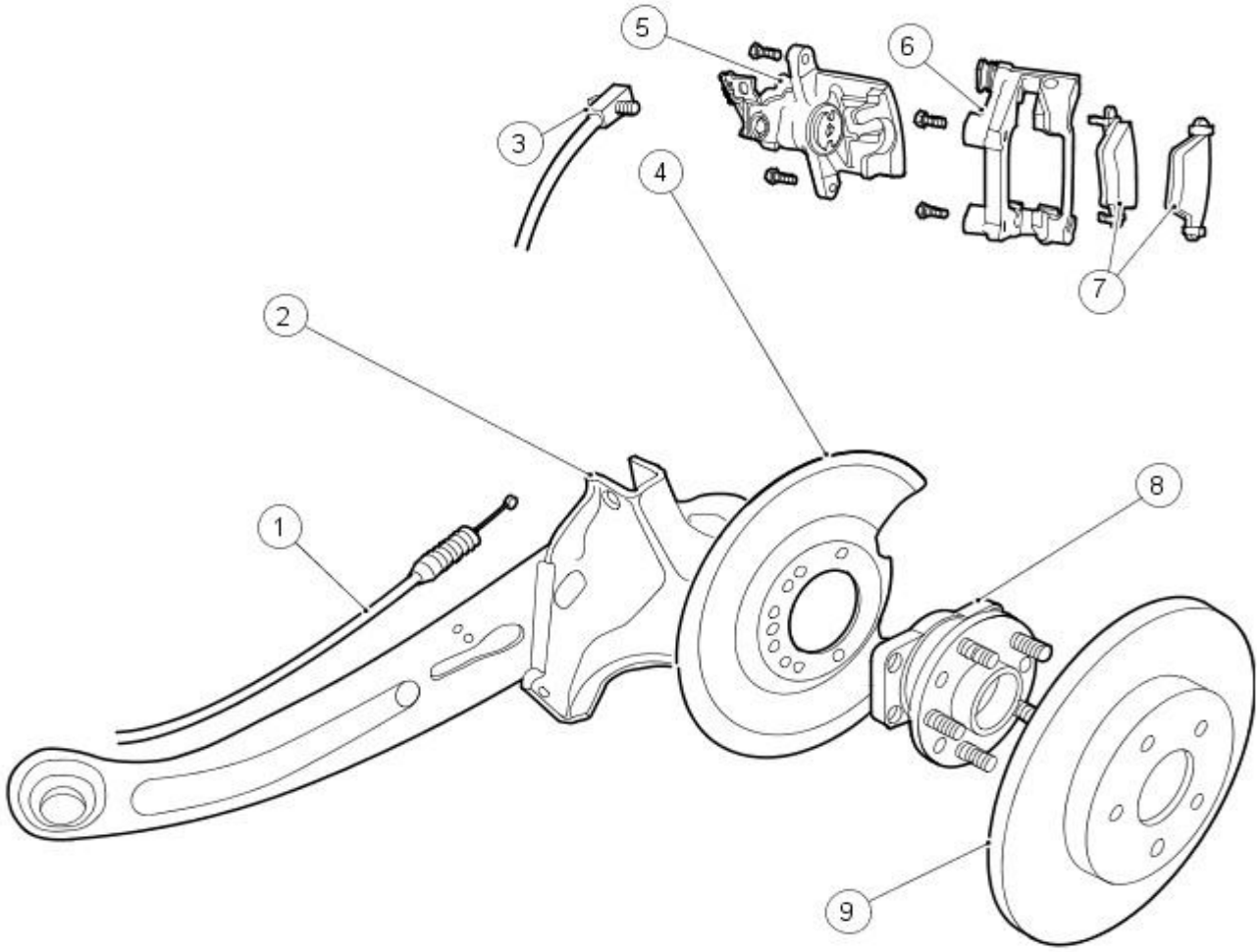

VUJ0003152

Item	Part Number	Description
1	—	Parking brake cable
2	—	Hub carrier
3	—	Brake hose
4	—	Brake disc shield
5	—	Brake caliper
6	—	Brake caliper anchor plate
7	—	Brake pads
8	—	Wheel hub
9	—	Brake disc

WARNING: Brake fluid contains polyglycol ethers and polyglycols. Avoid contact with the eyes. Wash hands thoroughly after handling. If brake fluid contacts the eyes, flush the eyes for 15 minutes with cold running water. Get medical attention if irritation persists. If taken internally, drink water and induce vomiting. Get medical attention immediately. Failure to follow these instructions may result in personal injury.

• NOTE: Brake system materials inherently generate heat in order to dissipate energy. As a result, occasional squeal is possible, which may be compounded by severe environmental conditions, such as cold, heat, rain, snow, salt and mud.

The rear disc brake system consists of the following components:

- Brake pads.
- Single piston, floating disc calipers.
- Brake discs.
- Brake caliper anchor plates.
- Brake hoses.
- Parking brake cables.

The caliper has two retaining bolts that attach the caliper to the anchor plate. The anchor plate is attached to the hub carrier with two bolts. The hydraulic system provides separate circuits for each pair of diagonally opposed wheels (i.e.left front, right rear and right front, left rear).

The brake disc is manufactured from cast iron and is of the solid type. It is retained on the hub by the wheel and the wheel studs.

The rear brake calipers are mounted on the hub carrier. These are of single, sliding piston type which ensures that equal effort is applied through both brake pads.

The rear brake caliper incorporates the parking brake which is self adjusting according to brake pad wear.

Published: 11-May-2011

Rear Disc Brake - Rear Disc Brake

Diagnosis and Testing

For additional information, refer toSection 206-00 Brake System - General Information.

Rear Disc Brake - Brake Caliper

Removal and Installation

Special Tool(s)	
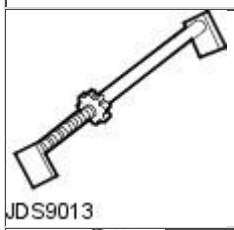	Brake pedal hold-down tool JDS 9013
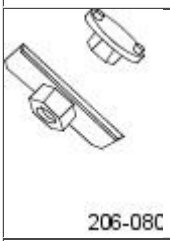	Brake caliper piston retractor tool 206-080
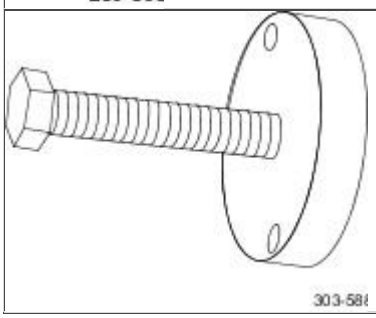	Crankshaft pulley/damper remover 303-588

Removal

1. Remove the wheel and tire.
For additional information, refer to: Wheel and Tire (204-04 Wheels and Tires, Removal and Installation).

2. Detach the parking brake cable.

1. Release the tension.
2. Detach the parking brake cable.

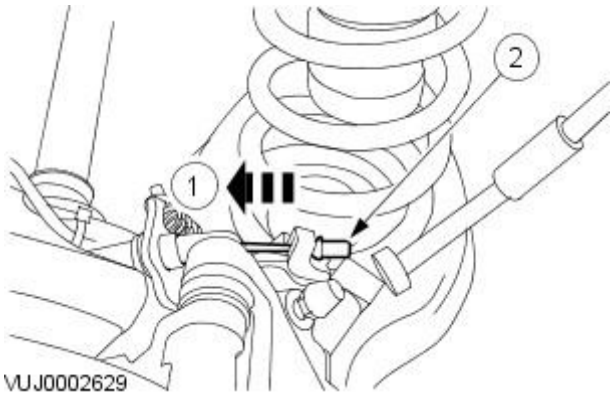

3. Remove the parking brake cable retaining clip.

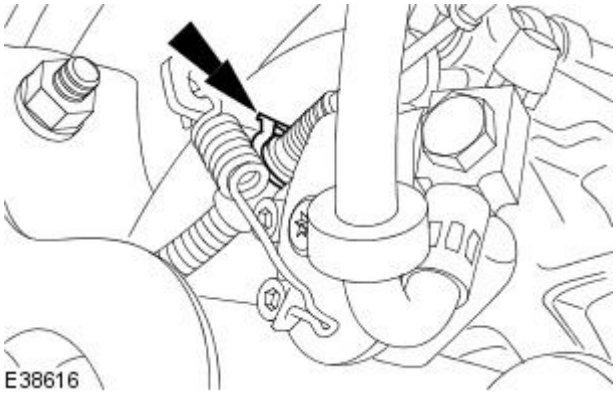

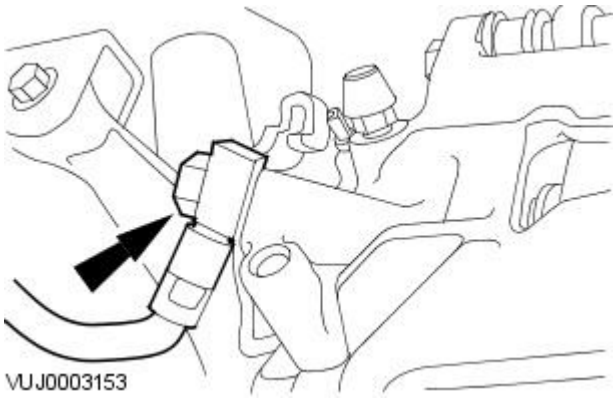

4. CAUTION: If brake fluid is spilt on the paintwork, the affected area must be immediately washed down with cold water.

• NOTE: To prevent the loss of brake fluid, apply the brake pedal hold down tool and adjust to hold the brake pedal down 40mm. Install a bleeder bottle to the bleed nipple and loosen.

• NOTE: Remove and discard the brake hose sealing washers.

Detach the brake hose.

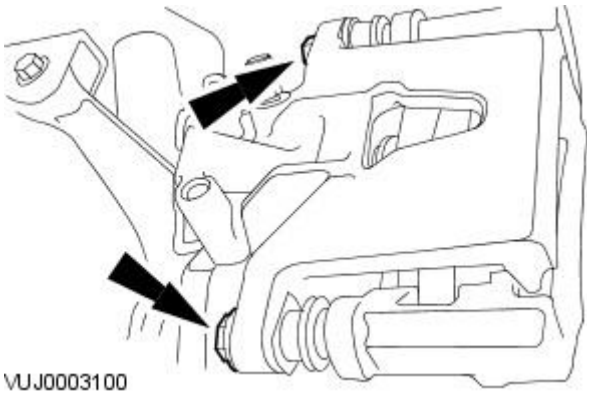

5. NOTE: Tighten the bleed nipple and remove the bleeder tube and bottle.

Remove the brake caliper.

- Remove and discard the brake caliper retaining bolts.

Installation

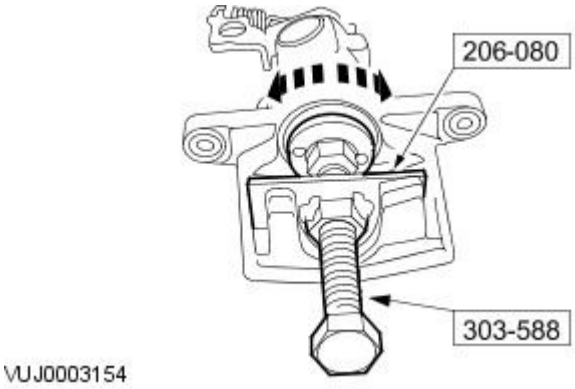

1. CAUTION: If the piston is pushed back into the housing, brake fluid will be forced out of the inlet port of the brake caliper.

• NOTE: The left-hand brake caliper piston retracts counter clockwise and the right-hand retracts clockwise.

Using the special tools, fully retract the brake caliper piston.

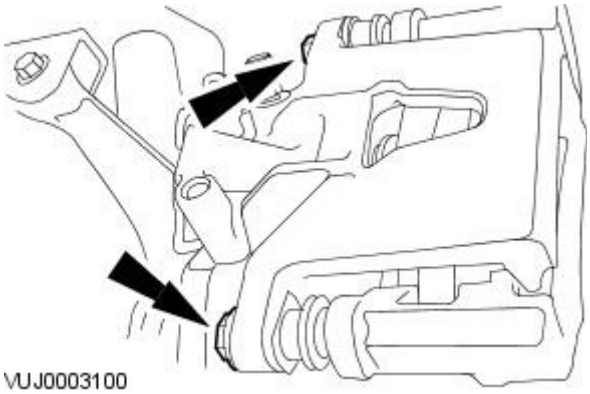

2. CAUTIONS:

Make sure the piston location mark is in the correct position so that the locator pin on the brake pad backing plate locates correctly into the piston.

Make sure that the brake disc faces are clean before installation.

• NOTE: Install new brake caliper retaining bolts.

Install the brake caliper.

- Tighten to 32 Nm.

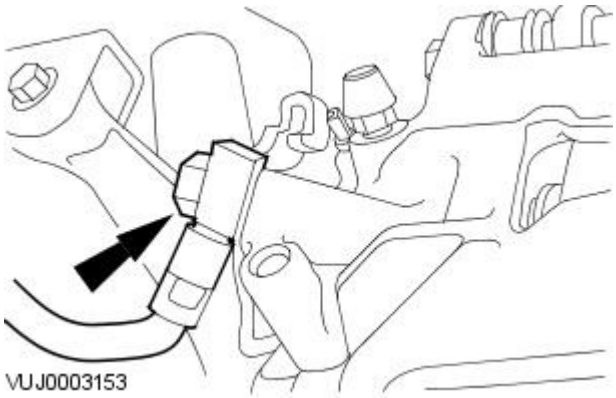

3. NOTE: Install new brake hose sealing washers.

Attach the brake hose.

- Tighten to 38 Nm.

4. Remove the brake pedal hold down tool.

5. Bleed the brake system.
For additional information, refer to: Brake System Bleeding (206-00 Brake System - General Information, General Procedures).

6. Attach the parking brake cable retaining clip.

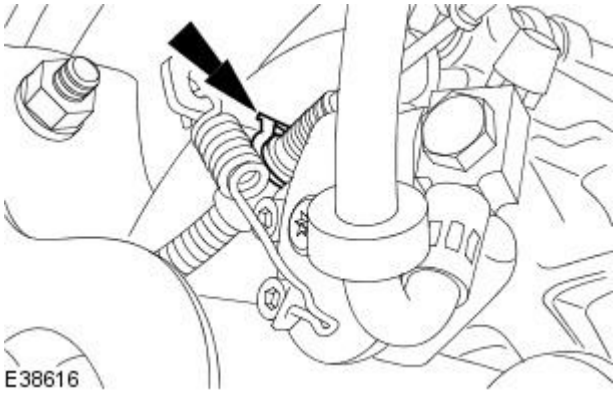

7. Attach the parking brake cable.

1. Release the tension.
2. Attach the parking brake cable.

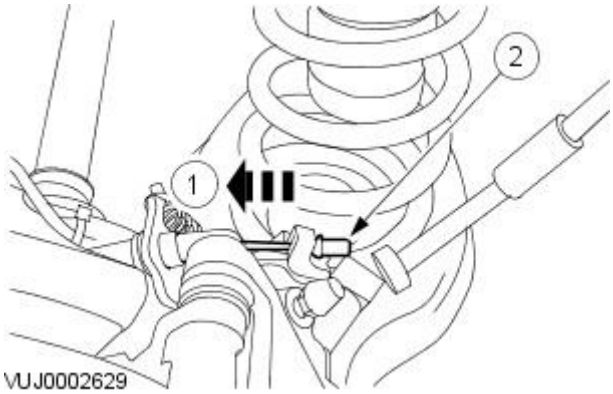

8. Install the wheel and tire.
For additional information, refer to: Wheel and Tire (204-04 Wheels and Tires, Removal and Installation).

Rear Disc Brake - Brake Disc

Removal and Installation

Removal

All vehicles

1. Remove the brake pads.
   For additional information, refer to: Brake Pads (206-04 Rear Disc Brake, Removal and Installation).

Vehicles with 2.5L or 3.0L engine

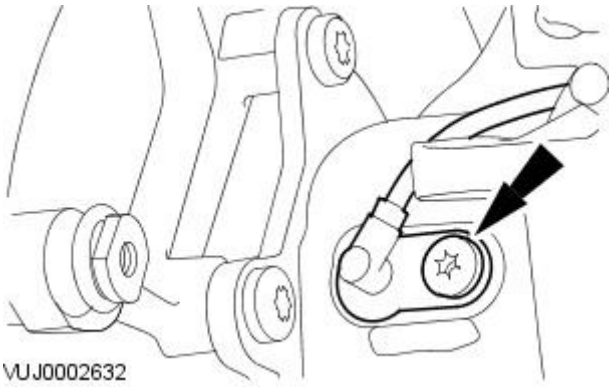

2. Detach the Anti-lock brake system (ABS) wheel speed sensor.
   - Remove the ABS wheel speed sensor retaining bolt.

All vehicles

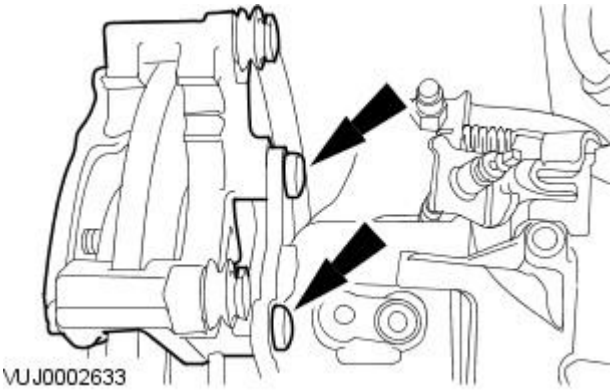

3. Remove the brake caliper anchor plate.
   - Remove and discard the brake caliper anchor plate retaining bolts.

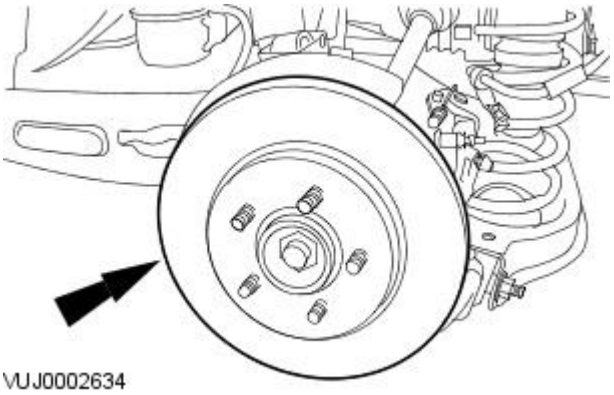

4. NOTE: If the brake disc is being refitted, the tip of a wheel hub stud must be marked with a corresponding part of the brake disc for correct re-alignment.

   Remove the brake disc.

Installation

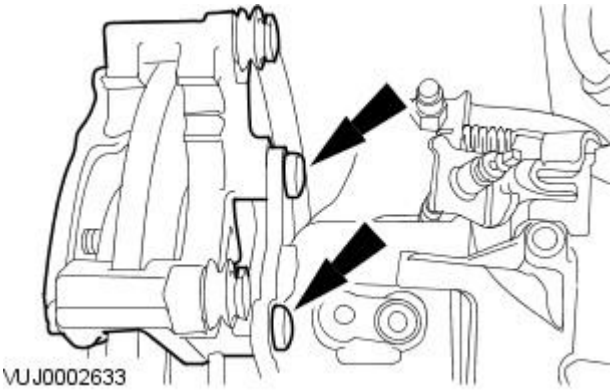

1. NOTE: Install new brake caliper anchor plate retaining bolts.

   To install, reverse the removal procedure.
   - Tighten to 70 Nm.

Published: 11-May-2011

Rear Disc Brake - Brake Disc Shield

Removal and Installation

1. Remove the rear wheel hub. For additional information, refer to Section 204-02 Rear Suspension.

Rear Disc Brake - Brake Pads

Removal and Installation

Special Tool(s)	
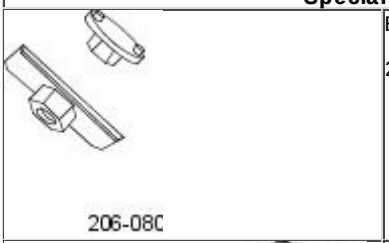	Brake caliper piston retractor tool 206-080
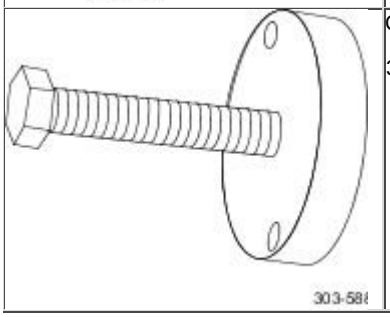	Crankshaft pulley/damper remover 303-588

Removal

1. Remove the wheel and tire.
For additional information, refer to: Wheel and Tire (204-04 Wheels and Tires, Removal and Installation).

2. Detach the parking brake cable.

1. Release the tension.
2. Detach the parking brake cable.

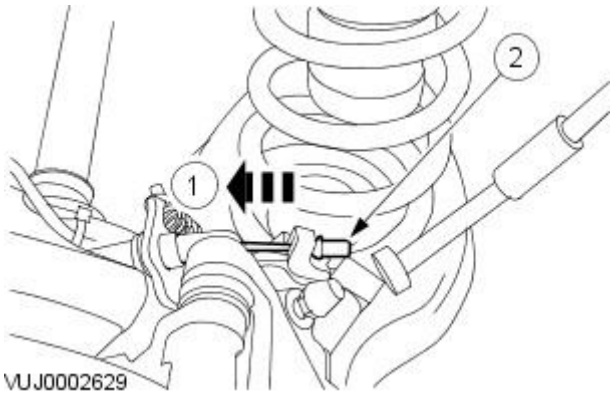

3. Remove the parking brake cable retaining clip.

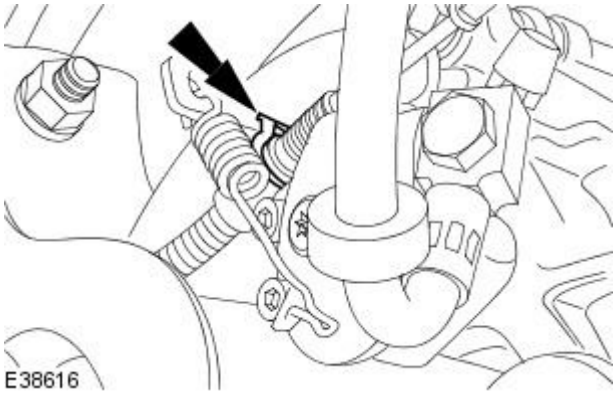

4. Detach the brake caliper and secure to one side.

- Remove and discard the brake caliper retaining bolts.

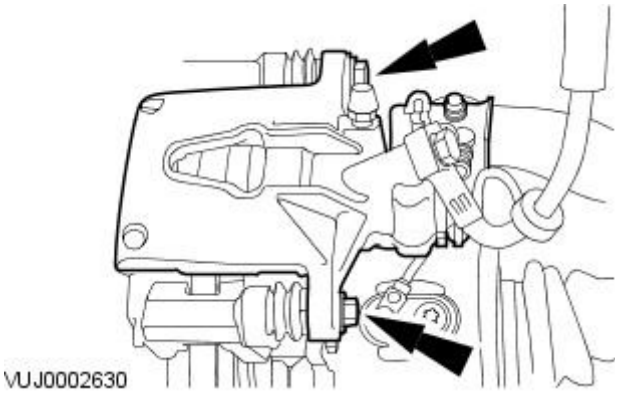

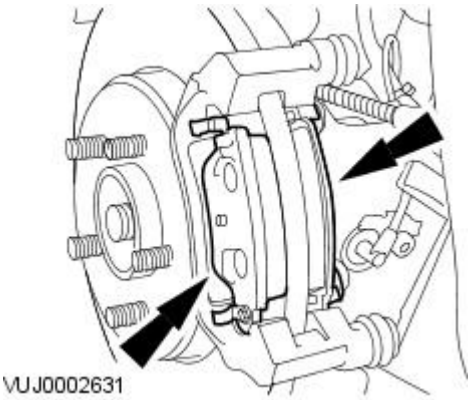

5. Remove the brake pads.

Installation

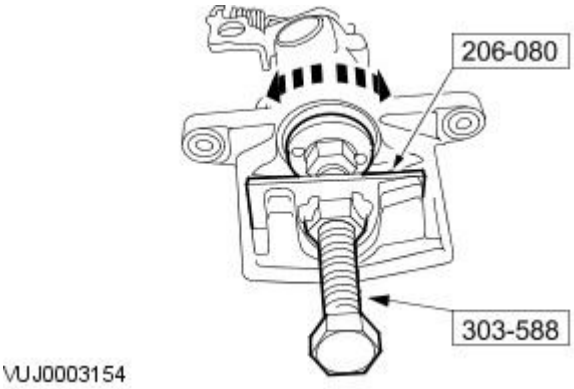

1. CAUTION: If the piston is pushed back into the housing, brake fluid will be forced back into the fluid reservoir.

• NOTE: The left-hand brake caliper piston retracts counter clockwise and the right-hand retracts clockwise.

Using the special tools, fully retract the brake caliper piston.

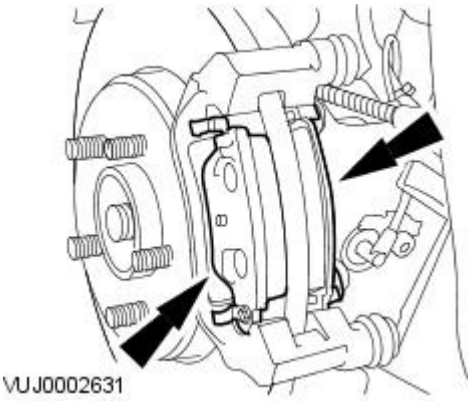

2. Install the brake pads.

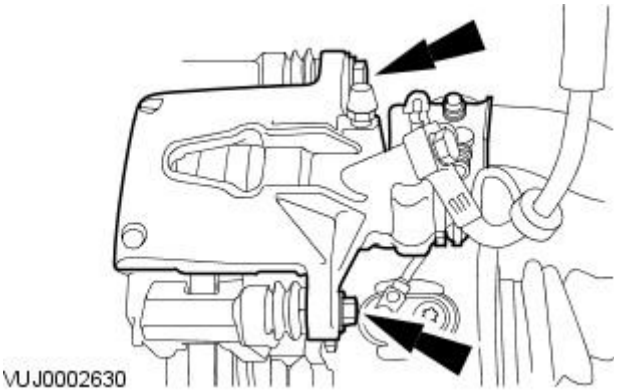

3. CAUTIONS:

Make sure that the brake disc faces are clean before installation.

Make sure the piston location mark is in the correct position so that the locator pin on the brake pad backing plate locates correctly into the piston.

• NOTE: Install new brake caliper retaining bolts.

Attach the brake caliper.

- Tighten to 32 Nm.

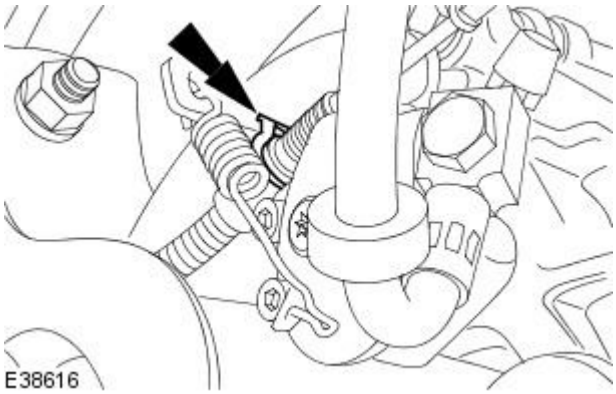

4. Attach the parking brake cable retaining clip.

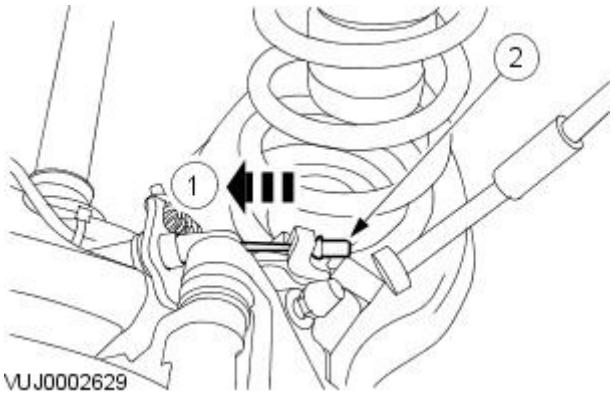

5. Attach the parking brake cable.

1. Release the tension.
2. Attach the parking brake cable.

6. Install the wheel and tire.
For additional information, refer to: Wheel and Tire (204-04 Wheels and Tires, Removal and Installation).

Published: 11-May-2011

Parking Brake and Actuation -

Torque Specifications

Description	Nm	lb-ft	lb-in
Parking brake control retaining nuts	20	15	-

Parking Brake and Actuation - Parking Brake

Description and Operation

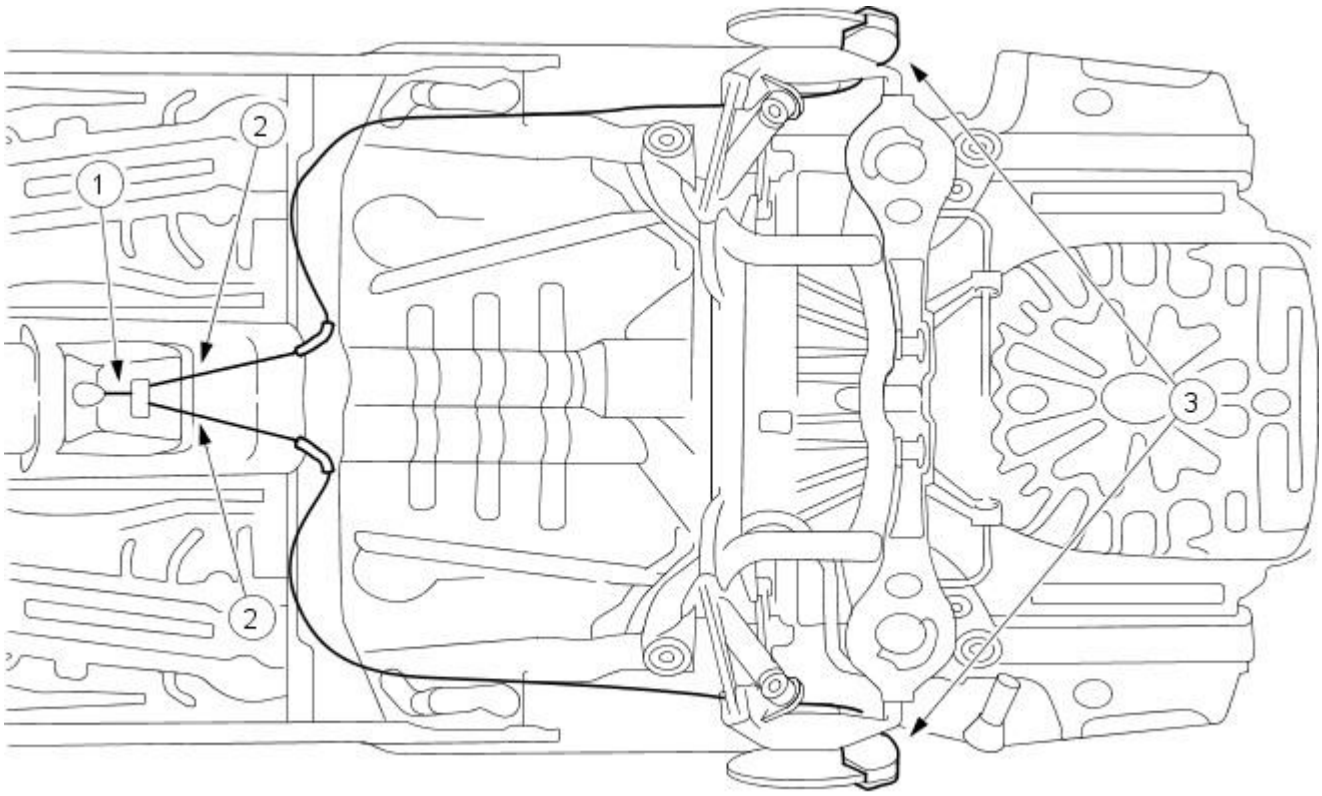

VUJ0002888

Item	Part Number	Description
1	—	Front cable
2	—	Rear cable
3	—	Brake calipers

The parking brake control system is cable-operated and controlled by an independent hand-operated parking brake control lever. The parking brake control lever activates the rear brake calipers through a cable and rear caliper lever with a ball in ramp mechanism. The rear caliper self adjusts to compensate for pad wear through hydraulic operation.

To adjust the cable, operate the parking brake control lever several times.

Parking Brake and Actuation - Parking Brake

Diagnosis and Testing

Inspection and Verification

1. **1.** Verify the customer concern by operating the system to duplicate the condition.
2. **2.** Visually inspect for obvious signs of mechanical or electrical damage.

Visual Inspection Chart

Mechanical	Electrical
Mechanical	**Electrical**
Parking brake control	Parking brake control warning circuit. For additional information, refer to REFER to: Instrument Cluster (413-01 Instrument Cluster, Diagnosis and Testing). .
Cable and conduit	
Equalizer	

3. **3.** If an obvious cause for an observed or reported concern is found, correct the cause (if possible) before proceeding to the next step.
4. **4.** If the concern is not visually evident, verify the symptom and refer to the Symptom Chart.

Symptom Chart

Symptom	Possible Sources	Action
The parking brake will not engage	* Parking brake control. * Cable and conduit.	* Go to Pinpoint Test A.
The parking brake will not release	* Cable and conduit. * Parking brake control.	* Go to Pinpoint Test B.

Pinpoint tests

PINPOINT TEST A : THE PARKING BRAKE WILL NOT ENGAGE	
TEST CONDITIONS	**DETAILS/RESULTS/ACTIONS**
A1: CHECK FOR INCORRECTLY ADJUSTED REAR PARKING BRAKE CABLE	
	1 Operate the parking brake control several times to adjust the cable.
	Does the parking brake now engage correctly? **Yes** Vehicle OK. **No** GO to A2.
A2: CHECK FOR WORN BRAKE PADS	
	1 Inspect the brake pads for excessive wear. For additional information, refer to REFER to: Brake System (206-00 Brake System - General Information, Diagnosis and Testing). .
	Are brake pads OK? **Yes** GO to A3. **No** INSTALL new brake pads. Test the system for normal operation.
A3: CHECK FOR DAMAGED PARKING BRAKE CABLES	
	1 Inspect the parking brake cables and conduit for damage, rust or fraying.
	Are the parking brake cables and conduits OK? **Yes** CHECK for other causes such as loose parking brake control or conventional brake system components. **No** REPAIR or INSTALL new cables and conduit as necessary. TEST the system for normal operation.

PINPOINT TEST B : THE PARKING BRAKE WILL NOT RELEASE	
TEST CONDITIONS	**DETAILS/RESULTS/ACTIONS**
B1: CHECK PARKING BRAKE CONTROL	
	1 Raise and support the vehicle with the parking brake fully applied. For additional information, refer to REFER to: Lifting (100-02 Jacking and Lifting, Description and Operation). . ● Release the parking brake by pulling upwards on the control lever and pushing the release button.
	Did the parking button release? **Yes** CHECK for other causes such as conventional brake system components, REPAIR or INSTALL new components as necessary. **No** GO to B2.
B2: CHECK PARKING BRAKE CABLES	
	1 Loosen the parking brake cable tension. ● Rotate the wheels by hand.
	Did the rear wheels rotate OK? **Yes** INSTALL a new parking brake control; Refer to the procedures in this section. TEST the system for normal operation. **No** GO to B3.
B3: CHECK FRONT PARKING BRAKE CABLE	

	1 Disconnect the parking brake front cable from the rear brake cable and conduit at the equalizer. ● Rotate the wheels by hand.
	Did the rear wheels rotate OK? **Yes** INSTALL a new front parking brake cable. For additional information, refer to the procedure in this section: REFER to: Parking Brake Cable - Vehicles With: Manually Adjusted Parking Brake (206-05 Parking Brake and Actuation, Removal and Installation). . TEST the system for normal operation. **No** GO to B4.
B4: CHECK REAR PARKING BRAKE CABLES	
	1 Disconnect the parking brake rear cable from the rear brake calipers, one at a time. ● Rotate the wheel affected by the disconnected parking brake.
	Did the rear wheel rotate OK? **Yes** INSTALL a new rear parking brake cable. For additional information, refer to the procedure in this section: REFER to: Parking Brake Cable - Vehicles With: Manually Adjusted Parking Brake (206-05 Parking Brake and Actuation, Removal and Installation). . TEST the system for normal operation. **No** For additional information, refer to REFER to: Brake System (206-00 Brake System - General Information, Description and Operation). .

Parking Brake and Actuation - Parking Brake CableVehicles With: Manually Adjusted Parking Brake

Removal and Installation

Special Tool(s)	
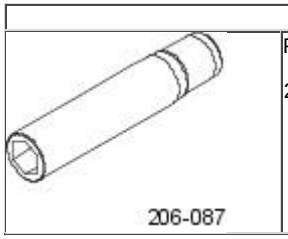	Parking brake cable adjuster socket. 206-087

Removal

1. Release the parking brake.

2. Raise and support the vehicle.
For additional information, refer to Section 100-02 Jacking and Lifting.

3. NOTE: 2.5L or 3.0L shown, 2.0L similar.

• NOTE: Using special tool 206-087 loosen the rear parking brake cable.

Loosen the rear parking brake cables retaining nut.

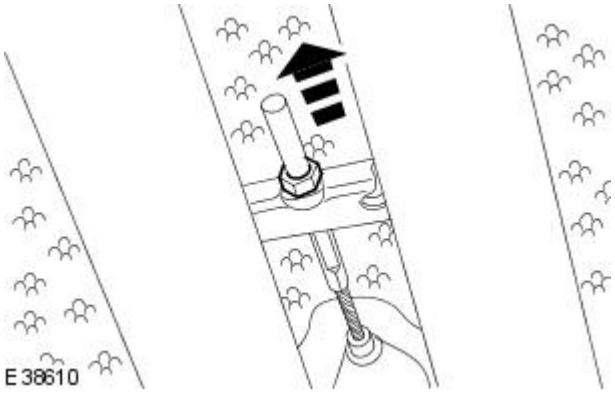

4. NOTE: 2.5L or 3.0L shown, 2.0L similar.

Detach the rear parking brake cables.

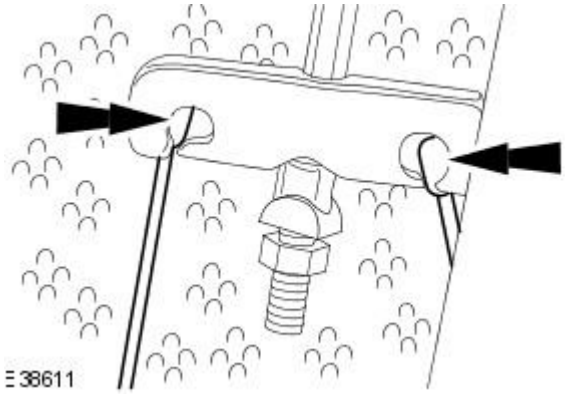

5. Detach the rear parking brake cable.

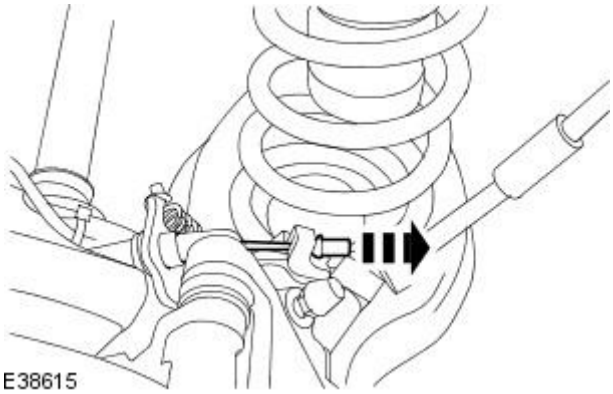

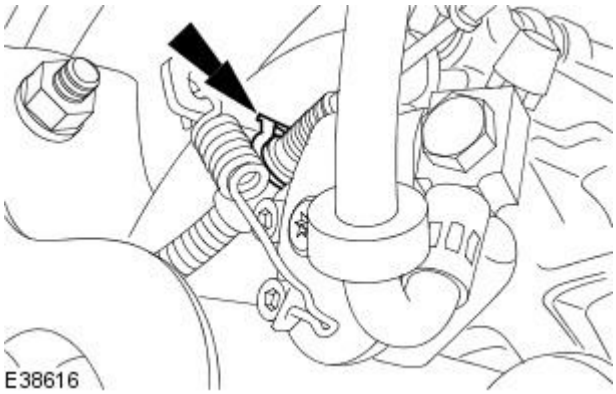

6. Remove the rear parking brake cable retaining clip.

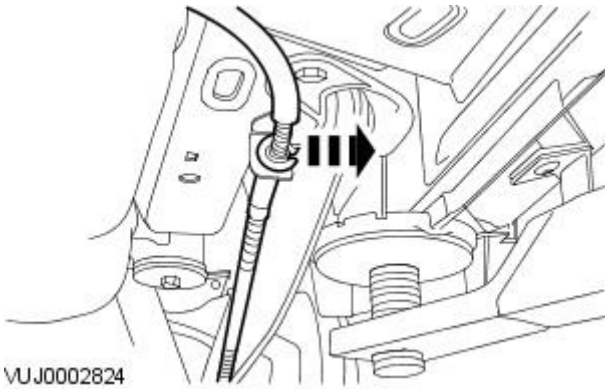

7. Detach the rear parking brake cable and conduit.

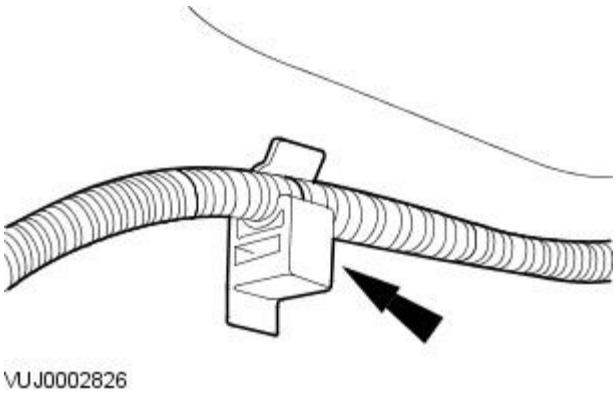

8. Detach the rear parking brake cable and conduit.

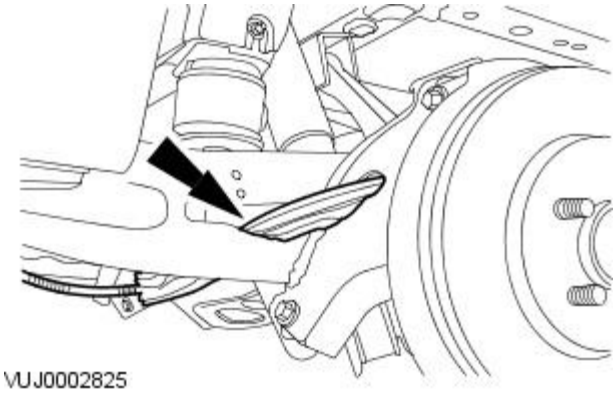

9. Detach the rear parking brake cable and conduit.

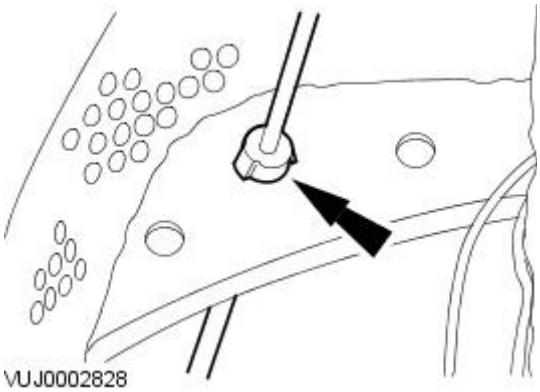

10. Remove the rear parking brake cable and conduit.

Installation

1. To install, reverse the removal procedure.
2. Carry out the parking brake cable adjustment.
   For additional information, refer to Parking Brake Cable Adjustment - in this section.

Parking Brake and Actuation - Parking Brake CableVehicles With: Self-Adjusting Parking Brake

Removal and Installation

Removal

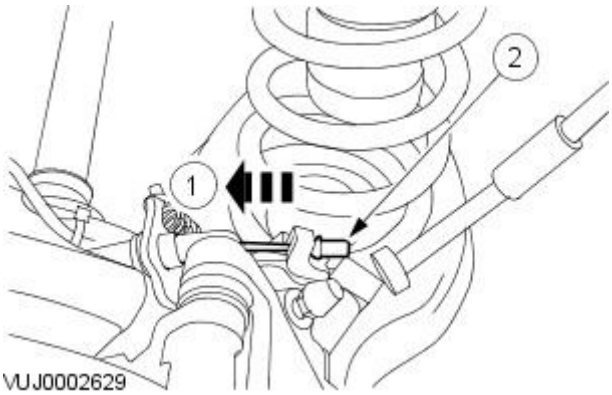

1. Remove the rear road wheel and tire. For additional information, refer toSection 204-04 Wheels and Tires.
2. Detach the rear parking brake cable.
    1. Release the tension.
    2. Detach the rear parking brake cable.

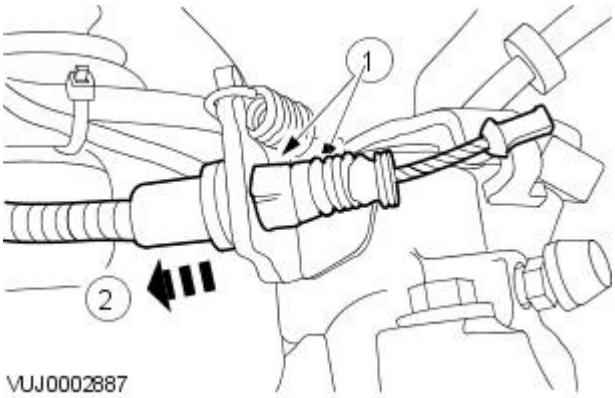

3. Detach the parking brake cable and conduit.
    1. Release the parking brake conduit retaining tangs.
    2. Detach the parking brake cable and conduit.

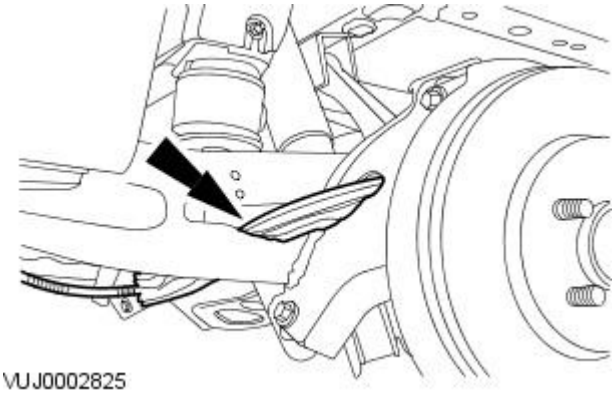

4. Detach the parking brake cable and conduit.

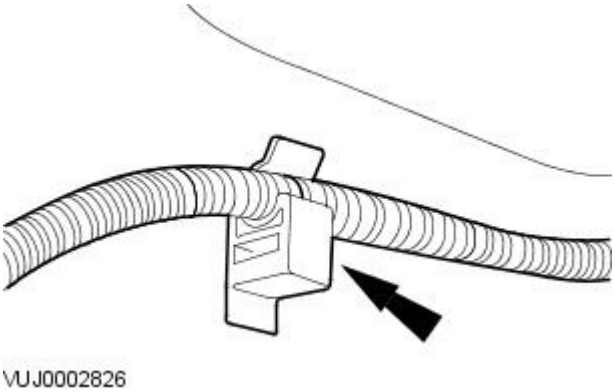

5. Remove the body undertray. For additional information, refer to Section 501-08 Exterior Trim and Ornamentation.
6. Detach the parking brake cable and conduit.

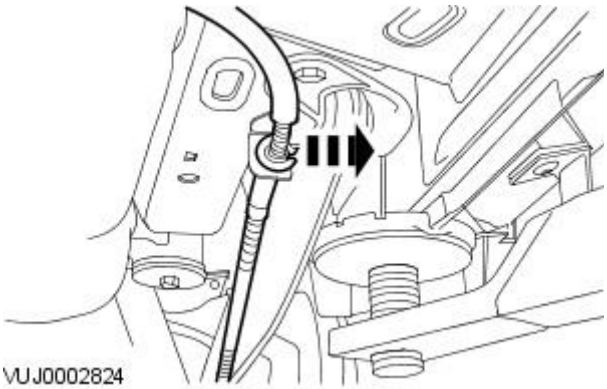

7. Detach the parking brake cable and conduit.

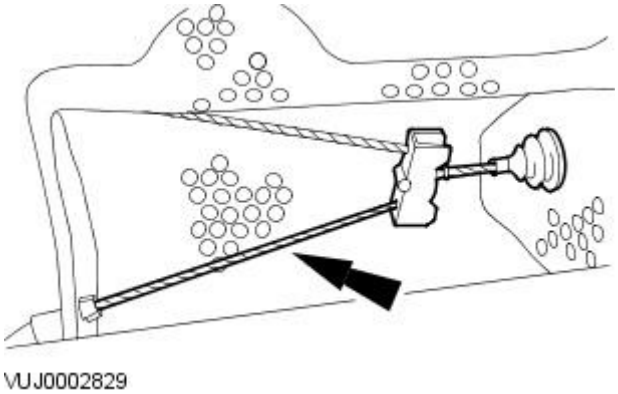

8. Detach the rear parking brake cable.

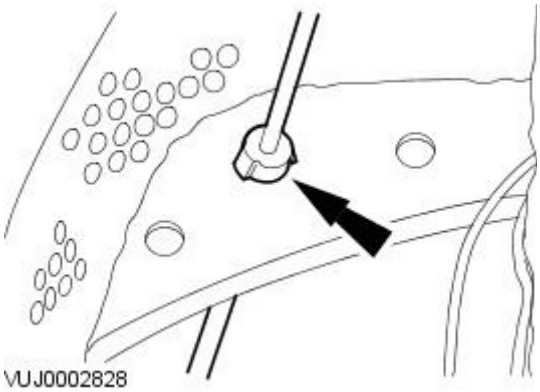

9. Remove the parking brake rear cable and conduit.

Installation

1. To install, reverse the removal procedure.

Parking Brake and Actuation - Parking Brake ControlVehicles With: Manually Adjusted Parking Brake

Removal and Installation

Special Tool(s)	
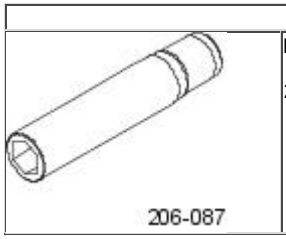	Parking brake cable adjuster socket. 206-087

Removal

All vehicles

1. Remove the center console. For additional information, refer to Section 501-12 Instrument Panel and Console.
2. Disconnect the parking brake warning indicator switch electrical connector.

3. Detach the park brake grommet.

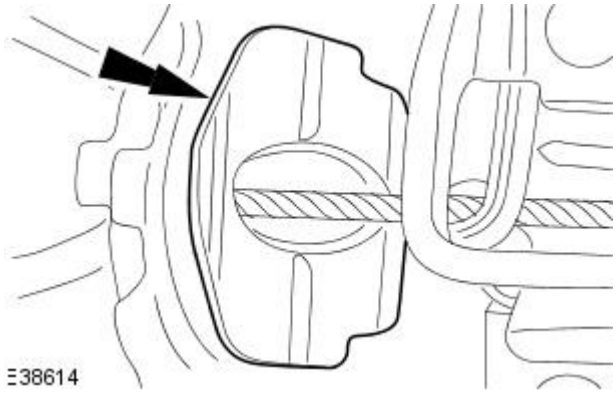

4. Release the parking brake.
5. Raise and support the vehicle.
   For additional information, refer to Section 100-02 Jacking and Lifting.
6. NOTE: 2.5L or 3.0L shown, 2.0L similar.

- NOTE: Using special tool 206-087 loosen the rear parking brake cables.

  Loosen the rear parking brake cables retaining nut.

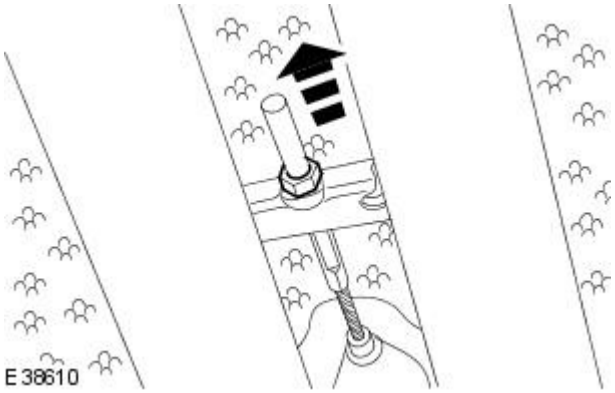

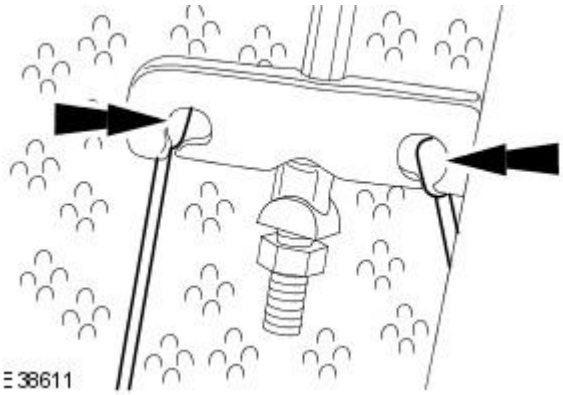

7. NOTE: 2.5L or 3.0L shown, 2.0L similar.

Detach the rear parking brake cables.

Vehicles with 2.5L or 3.0L engine

8. Remove the driveshaft. For additional information refer to Section 205-01 Driveshaft.

All vehicles

9. Remove the parking brake.

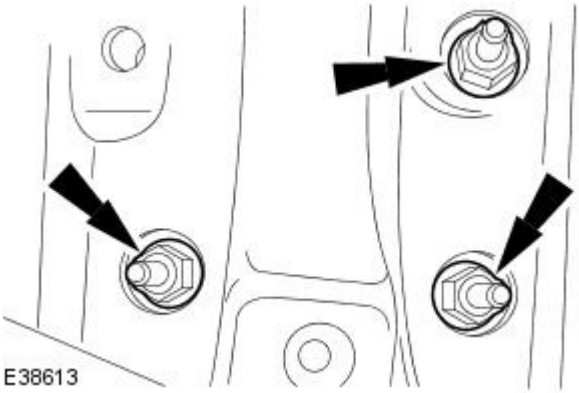

Installation

1. To install, reverse the removal procedure.

- Tighten to 25 Nm.

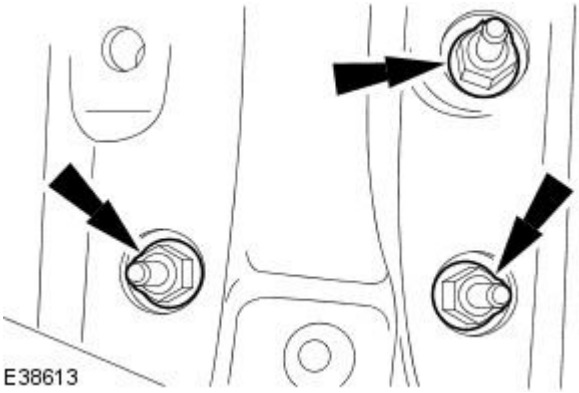

2. Carry out the parking brake cable adjustment.
For additional information, refer to Parking Brake Cable Adjustment - in this section.

Parking Brake and Actuation - Parking Brake ControlVehicles With: Self-Adjusting Parking Brake

Removal and Installation

Removal

All vehicles

1. Remove the center console. For additional information, refer to Section 501-12 Instrument Panel and Console.
2. Disconnect the parking brake warning indicator switch electrical connector.

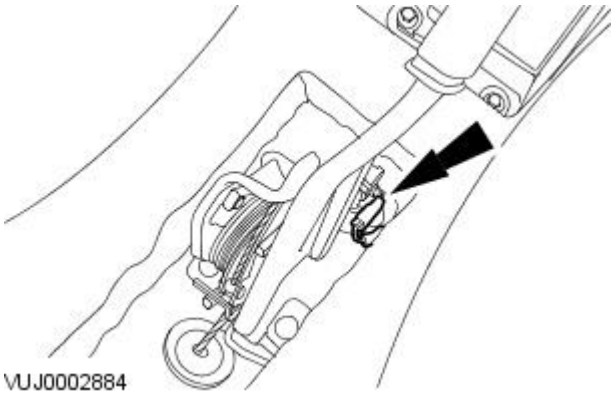

VUJ0002884

3. Release the parking brake.
4. Remove the rear road wheels and tires. For additional information, refer to Section 204-04 Wheels and Tires.

Vehicles with 2.5L or 3.0L engine

5. Remove the driveshaft. For additional information refer to Section 205-01 Driveshaft.

All vehicles

6. Remove the exhaust front muffler. For additional information, refer to Section 309-00 Exhaust System.
7. Detach the parking brake rear cables.

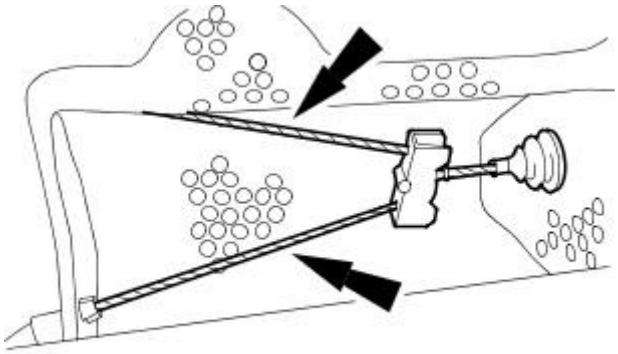

VUJ0003184

8. Remove the exhaust front heat shield.

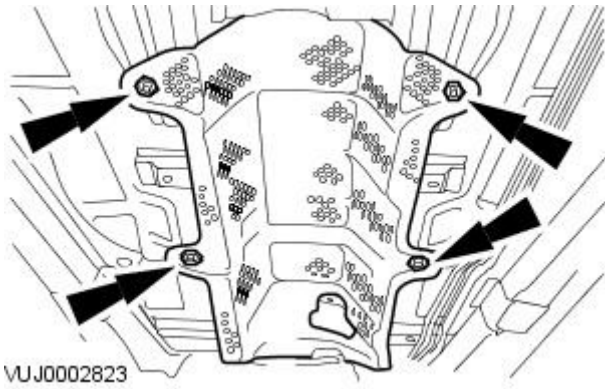

VUJ0002823

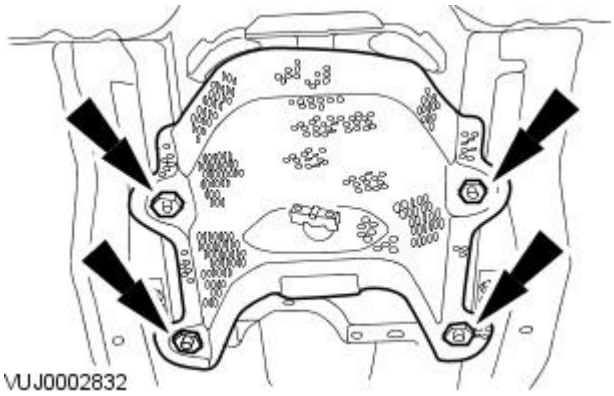

9. Remove the exhaust rear heat shield.

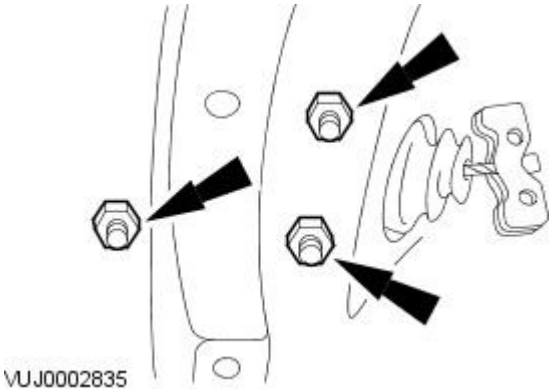

10. Remove the parking brake control retaining nuts.

11. Lower the vehicle.

12. Detach the parking brake control.

1. Detach the parking brake cable grommet.
2. Detach the parking brake control.

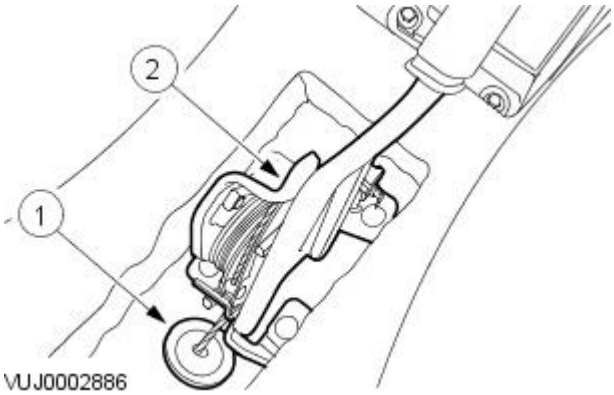

13. Remove the parking brake control.

1. Align the flat on the nipple to clear the spring.
2. Remove the parking brake control.

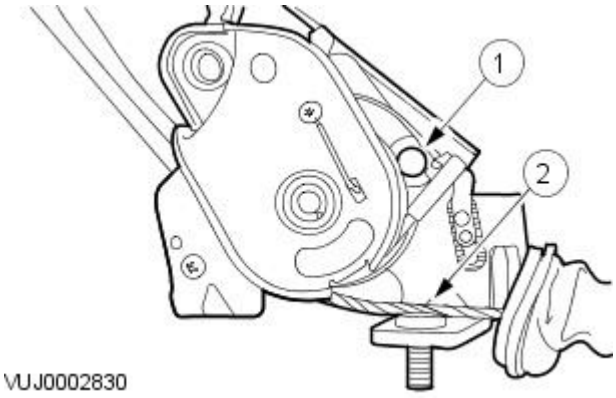

Installation

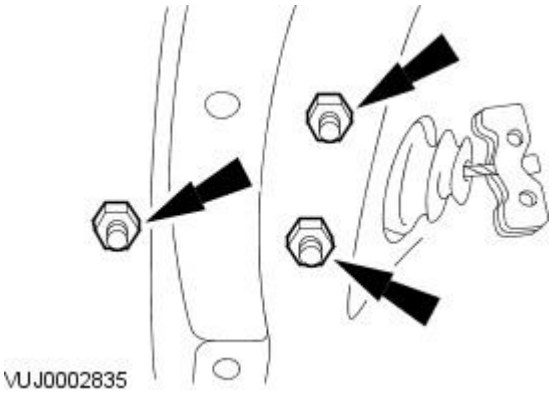

1. To install, reverse the removal proceedure.

- Tighten to 20 Nm.

Hydraulic Brake Actuation -

Lubricants, Fluids, Sealers and Adhesives

CAUTION: Do not use brake fluid ITT Super Dot 4 on 2006my vehicles onwards. Failure to follow this instruction may result in damage to the vehicle.

• NOTE: Brake fluid ITT Super Dot 4 has now been superseded by Shell ESL Super Dot 4 which is the Jaguar recommended brake fluid. Shell ESL Super Dot 4 can be used on all model years.

Item	Specification
Brake fluid	ITT Super Dot 4
Brake fluid	Shell ESL Super Dot 4

Torque Specifications

Description	Nm	lb-ft	lb-in
Brake master cylinder retaining nuts.	20	15	-
Brake tube to brake master cylinder unions.	15	11	-

Hydraulic Brake Actuation - Hydraulic Brake Actuation

Description and Operation

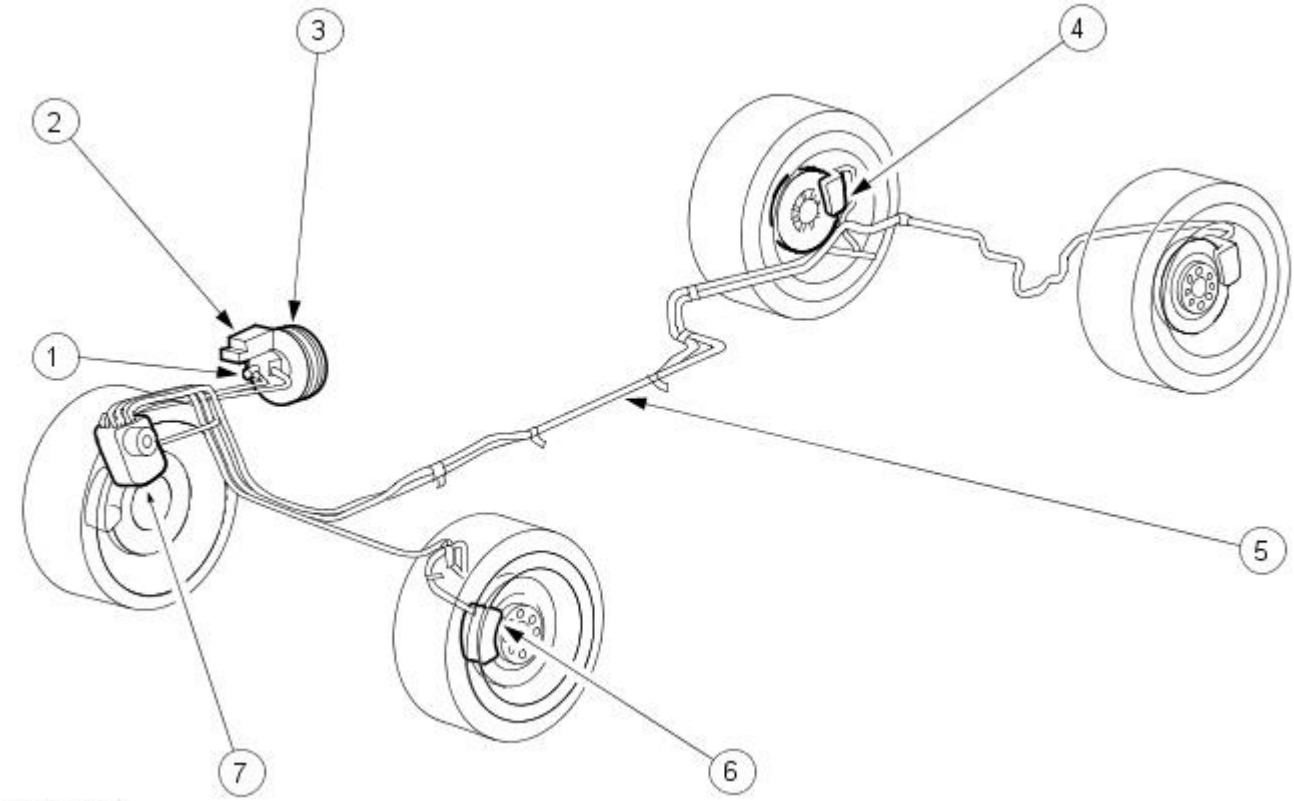

VUJ0003005

Item	Part Number	Description
1	—	Brake master cylinder
2	—	Brake fluid reservoir
3	—	Brake booster
4	—	Rear brake caliper
5	—	Brake tubes
6	—	Front brake caliper
7	—	Hydraulic control unit

WARNING: Brake fluid contains polyglycol ethers and polyglycols. Avoid contact with the eyes. Wash hands thoroughly after handling. If brake fluid contacts the eyes, flush the eyes for 15 minutes with cold running water. Get medical attention if irritation persists. If taken internally, drink water and induce vomiting. Get medical attention immediately. Failure to follow these instructions may result in personal injury.

The hydraulic brake system is of a pedal operated, diagonally split dual line brake system that consists of the following components:

- a brake booster
- a master cylinder and reservoir
- front brake calipers
- rear brake calipers
- brake tubes and hoses
- Anti-lock brake system (ABS)
- Traction control system (TCS)/Interactive vehicle dynamics (IVD)

Brake Master Cylinder

The brake master cylinder is a dual piston type. The master cylinder operates as follows:

- when the brake pedal is applied, pressure is applied by mechanical linkage to the primary and secondary systems
- brake master cylinder pistons apply hydraulic pressure to the two circuits

The master cylinder consists of the following components:

- primary and secondary pistons
- brake fluid reservoir with integral fluid level warning indicator

Published: 11-May-2011

Hydraulic Brake Actuation - Hydraulic Brake Actuation

Diagnosis and Testing

For additional information, refer to Section 206-00 Brake System - General Information.

Hydraulic Brake Actuation - Brake Fluid Reservoir

Removal and Installation

Removal

All vehicles

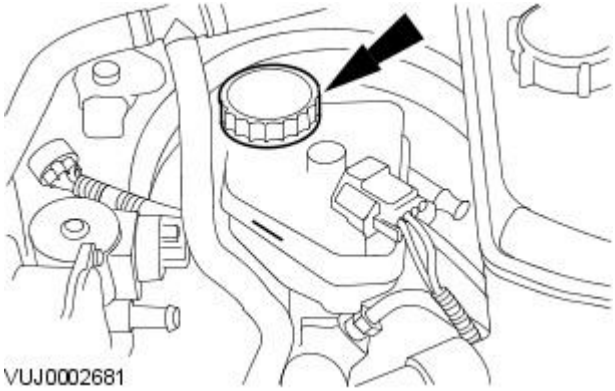

1. CAUTION: If brake fluid is spilt on the paintwork, the affected area must be immediately washed down with cold water.

- NOTE: Make sure the filler cap does not become contaminated.

Remove the brake fluid reservoir filler cap.

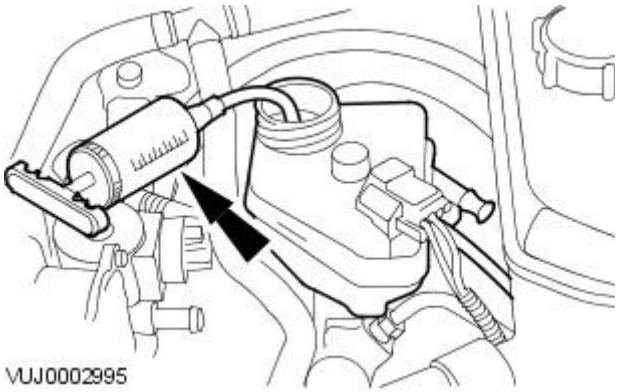

2. Using a suitable suction device drain the brake fluid reservoir.

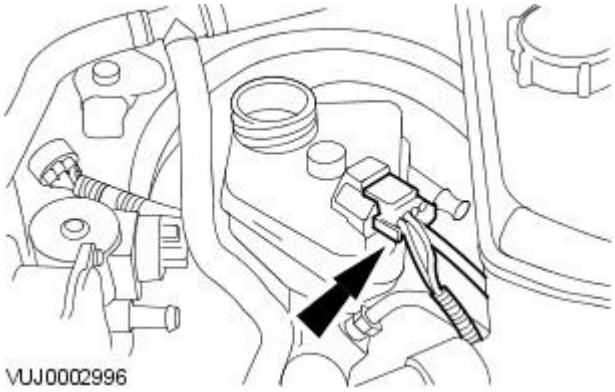

3. Disconnect the brake fluid low level warning indicator electrical connector.

Vehicles with manual transmission

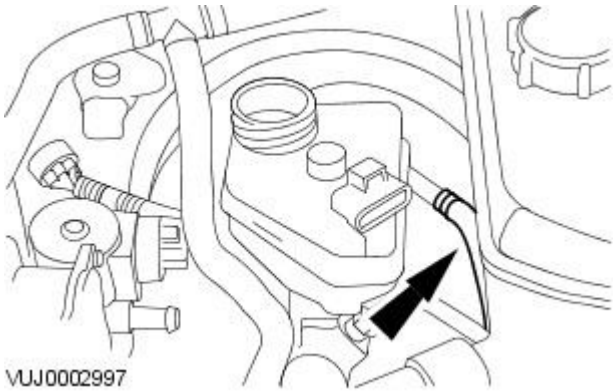

4. Detach the clutch master cylinder feed hose.

All vehicles

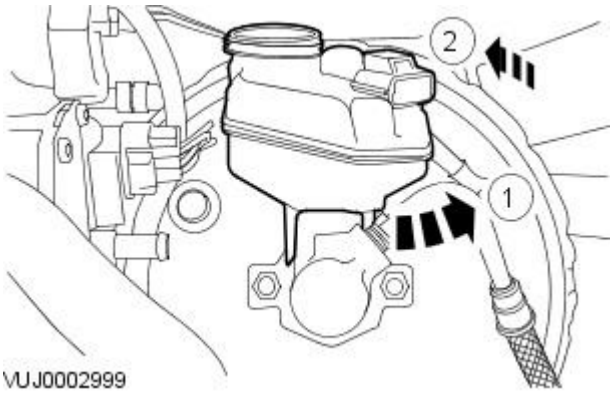

5. NOTE: Remove and discard the O-ring seals from the brake master cylinder.

Remove the brake fluid reservoir.

1. Release one leg of the reservoir from the retaining pin.
2. Remove the brake fluid reservoir.

Installation

All vehicles

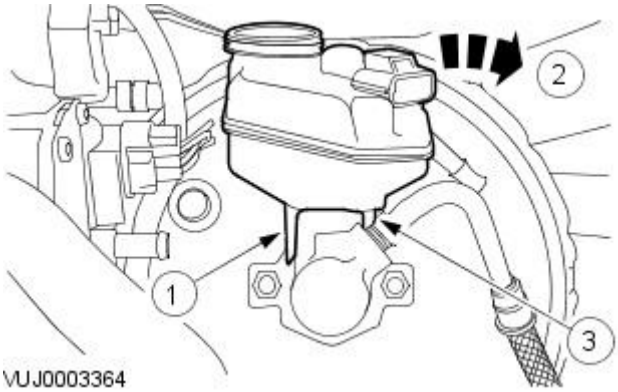

1. NOTE: Install new O-ring seals to the brake master cylinder.

Install the brake fluid reservoir.

1. Locate the left hand brake fluid reservoir leg to the retaining pin.
2. Fully seat the brake fluid reservoir to the master cylinder.
3. Fully seat the right hand brake fluid reservoir leg to the retaining pin.

Vehicles with manual transmission

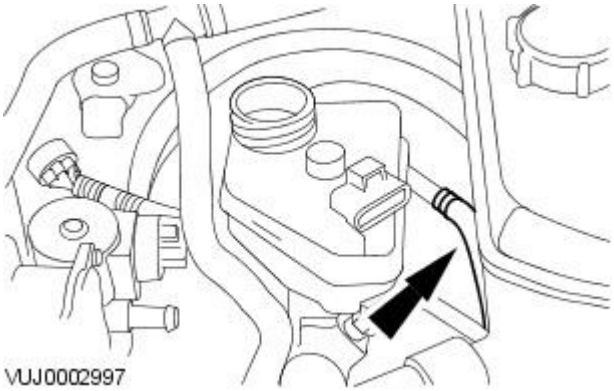

2. Attach the clutch master cylinder feed hose.

All vehicles

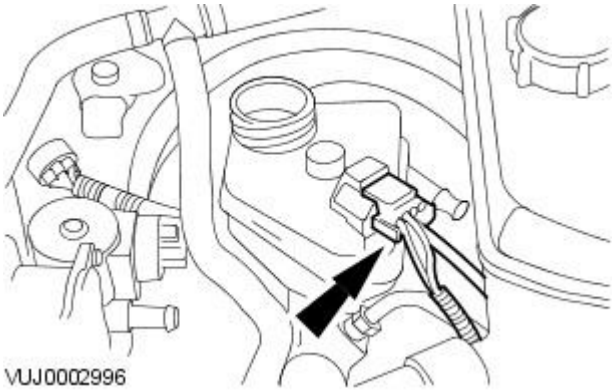

3. Connect the brake fluid low level warning indicator electrical connector.

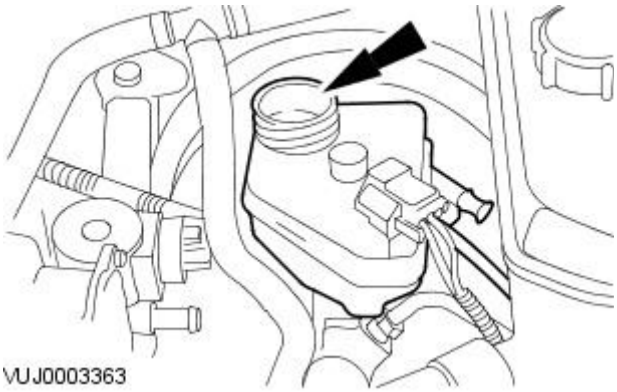

4. Fill the brake fluid reservoir.

5. Bleed the brake system. For additional information, refer to Section 206-00 Brake System - General Information.

6. Install the brake fluid reservoir filler cap.

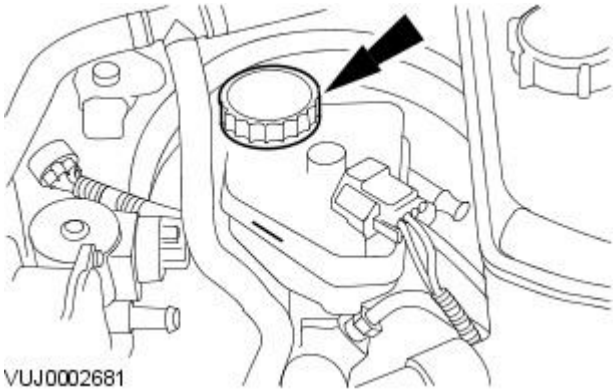

Hydraulic Brake Actuation - Brake Master Cylinder

Removal and Installation

Removal

All vehicles

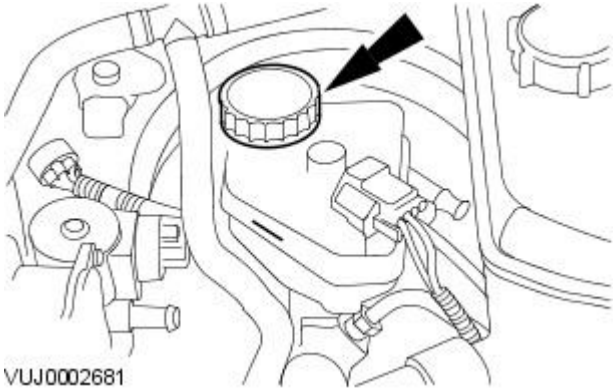

1. CAUTION: If brake fluid is spilt on the paintwork, the affected area must be immediately washed down with cold water.

• NOTE: Make sure the filler cap does not become contaminated.

Remove the brake fluid reservoir filler cap.

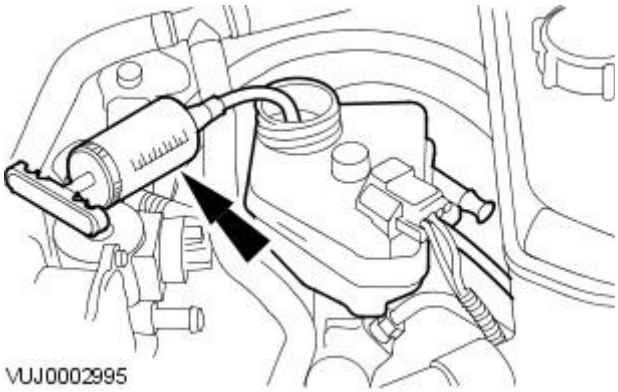

2. Using a suitable suction device drain the brake fluid reservoir.

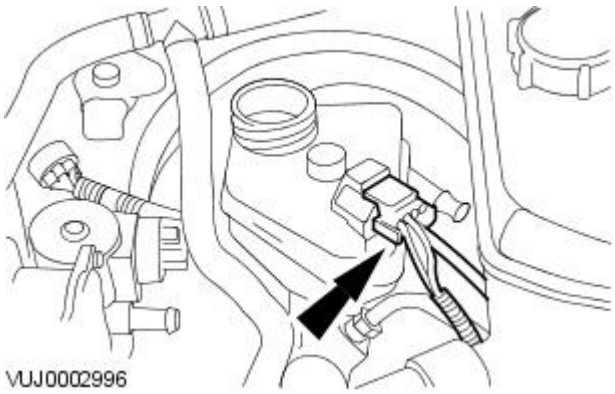

3. Disconnect the brake fluid low level warning indicator electrical connector.

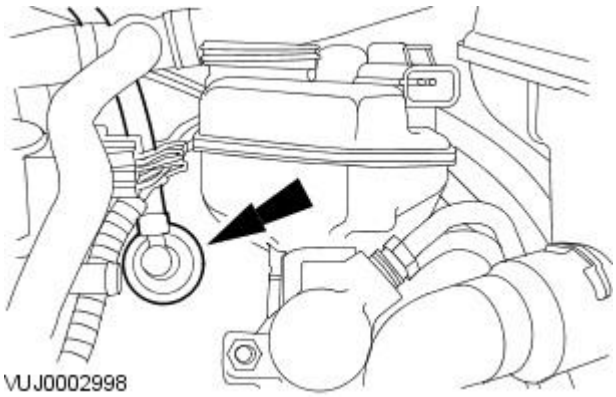

4. Detach the brake booster vacuum hose.

Vehicles with manual transmission

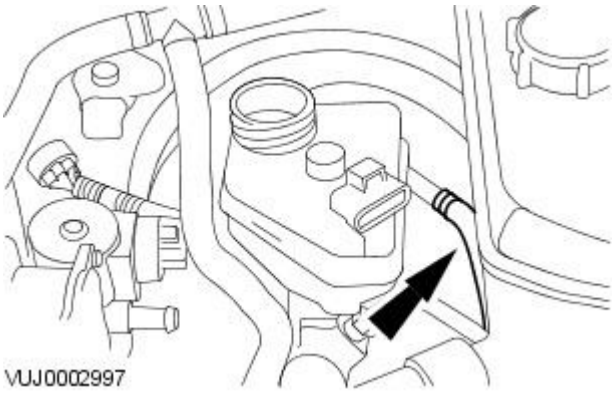

5. Detach the clutch master cylinder feed hose.

All vehicles

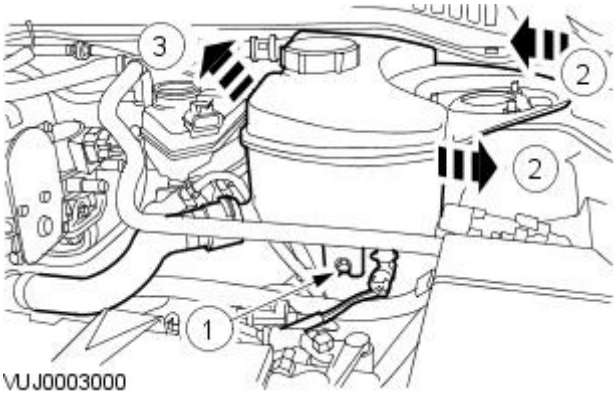

6. Reposition the coolant expansion tank.

1. Remove the coolant expansion tank retaining bolt.
2. Turn the coolant expansion tank counter clockwise.
3. Reposition the coolant expansion tank.

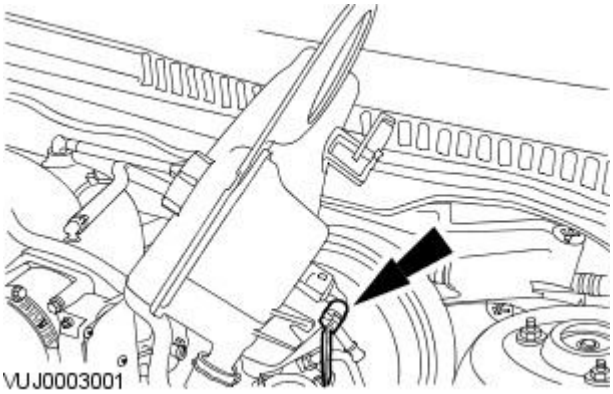

7. Disconnect the coolant low level warning indicator electrical connector.

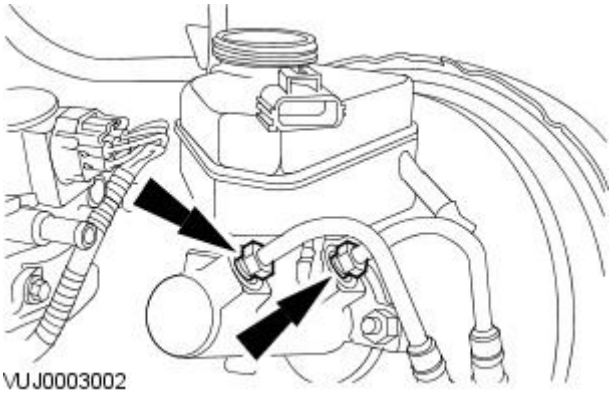

8. Disconnect the brake fluid supply tubes.

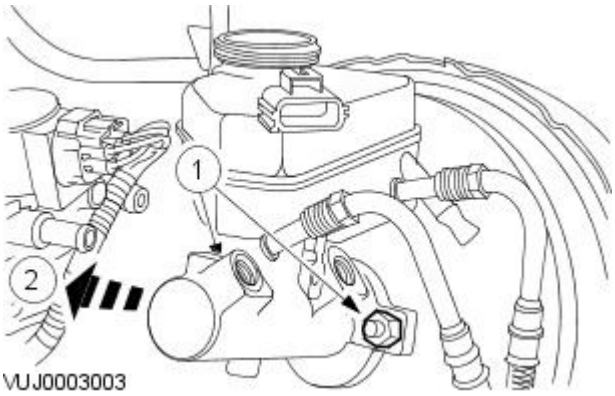

9. NOTE: Remove and discard the O-ring seal at the rear of the brake master cylinder.

Remove the brake master cylinder and reservoir.

1. Remove the brake master cylinder retaining nuts.
2. Remove the brake master cylinder and reservoir.

Installation

All vehicles

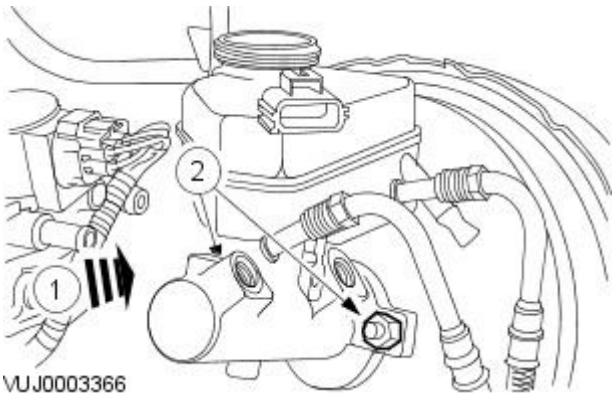

1. NOTE: Install a new O-ring seal to the rear of the brake master cylinder.

Install the brake master cylinder and reservoir.

1. Install the brake master cylinder and reservoir.
2. Install the brake master cylinder retaining nuts.
   1. Tighten to 20 Nm.

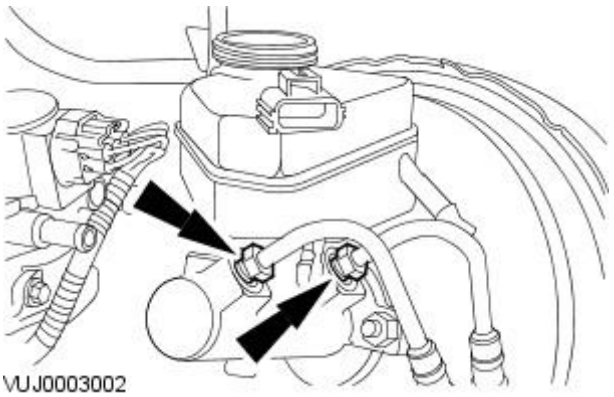

2. Connect the brake fluid supply tubes.

- Tighten to 15 Nm.

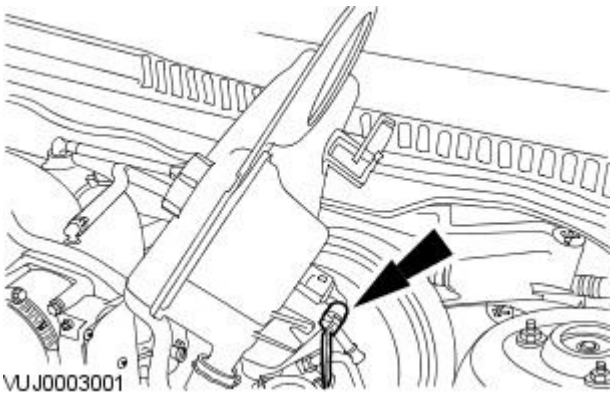

3. Connect the coolant low level warning indicator electrical connector.

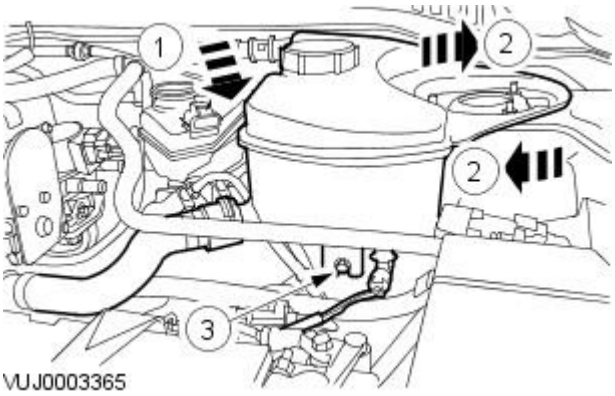

4. Attach the coolant expansion tank.

1. Reposition the coolant expansion tank.
2. Turn the coolant expansion tank clockwise.
3. Install the coolant expansion tank retaining bolt.

Vehicles with manual transmission

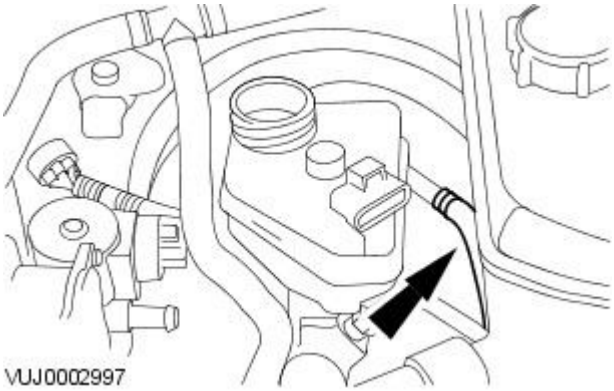

5. Attach the clutch master cylinder feed hose.

All vehicles

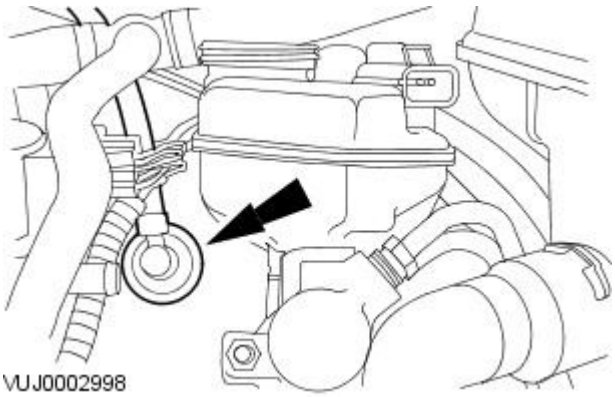

6. Attach the brake booster vacuum hose.

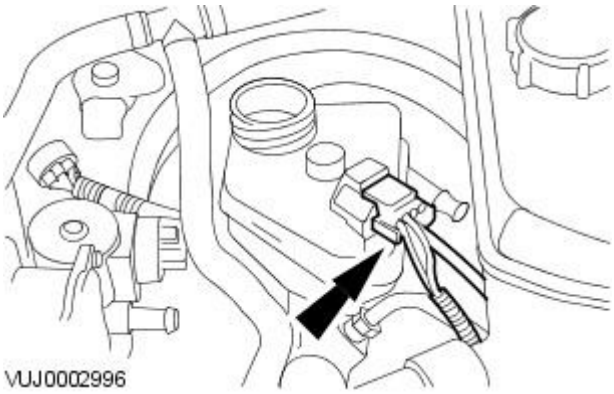

7. Connect the brake fluid low level warning indicator electrical connector.

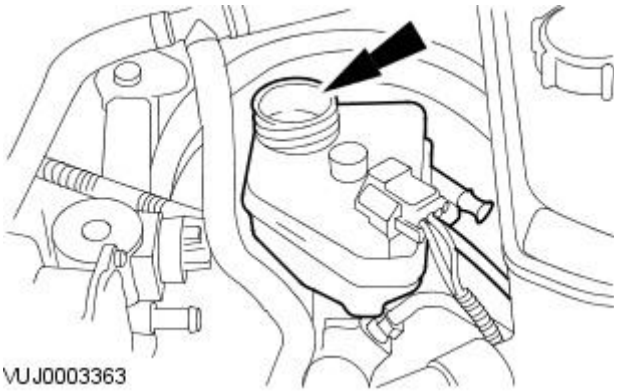

8. Fill the brake fluid reservoir.

9. Bleed the brake system. For additional information, refer to Section 206-00 Brake System - General Information.

10. Install the brake fluid reservoir filler cap.

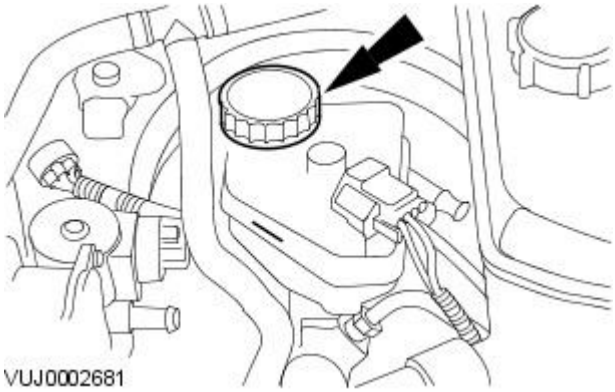

Hydraulic Brake Actuation - Brake Pedal and Bracket

Removal and Installation

Removal

Vehicles with manual transmission

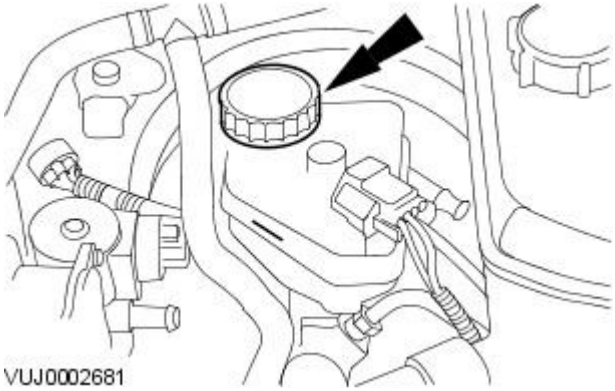

1. WARNING: Brake fluid contains polyglycol ethers and polyglycols. Avoid contact with the eyes. Wash hands thoroughly after handling. If brake fluid contacts the eyes, flush the eyes for 15 minutes with cold water. Get medical attention immediately if irritation persists. If taken internally, drink water and induce vomiting. Get medical attention immediately. Failure to follow these instructions may result in personal injury.

CAUTION: If brake fluid is spilt on the paintwork, the affected area must be immediately washed down with cold water.

- NOTE: Make sure the filler cap does not become contaminated.

Remove the brake fluid reservoir filler cap.

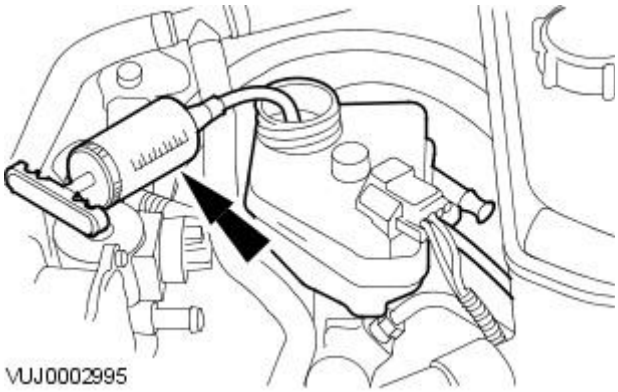

2. CAUTION: If brake fluid is spilt on the paintwork, the affected area must be immediately washed down with cold water.

Using a suitable suction device, drain the brake fluid reservoir.

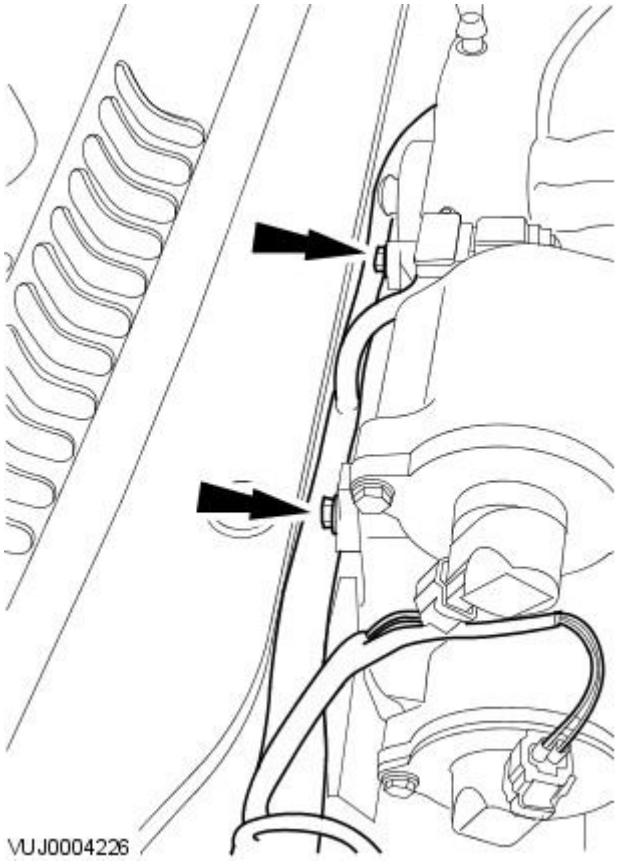

3. NOTE: Vehicles with 2.5L or 3.0L engine only.

Detach the engine wiring harness.

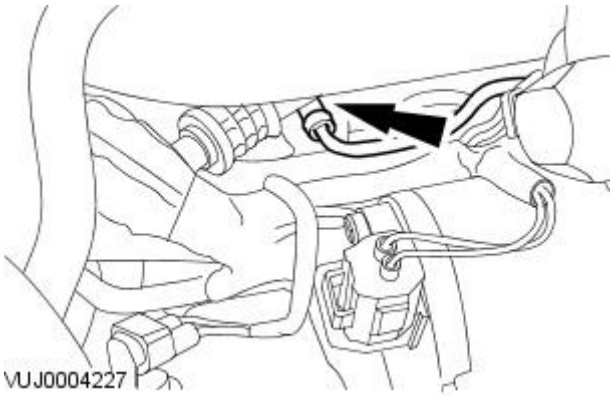

4. CAUTION: If brake fluid is spilt on the paintwork, the affected area must be immediately washed down with cold water.

- NOTE: Install suitable blanking plugs.
- NOTE: Right-hand drive shown, left-hand drive similar.

Disconnect the clutch master cylinder supply line.

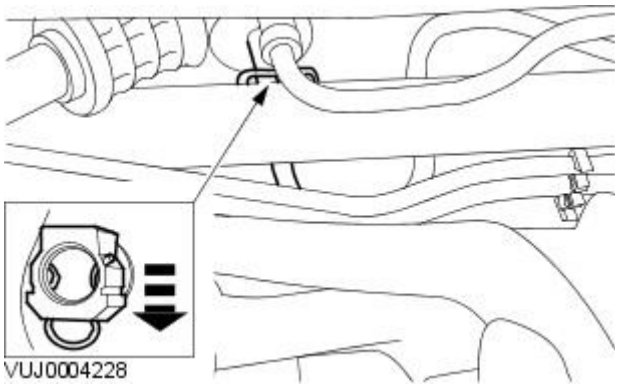

5. CAUTION: If brake fluid is spilt on the paintwork, the affected area must be immediately washed down with cold water.

- NOTE: Install suitable blanking plugs.
- NOTE: Right-hand drive shown, left-hand drive similar.

Disconnect the clutch slave cylinder supply line from the clutch master cylinder.

- Release the retaining clip to disconnect the line.

Right-hand drive vehicles

6. Remove the brake pedal and bracket retaining nuts.

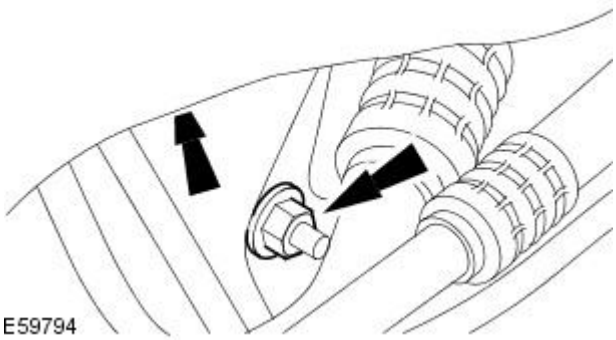

Vehicles without driver lower air bag

7. Remove the driver side instrument panel lower trim panel.

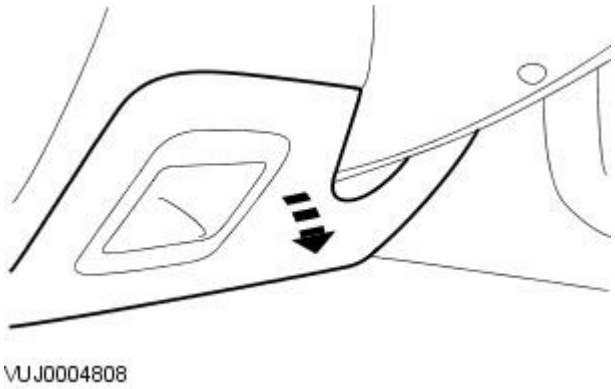

Vehicles with driver lower air bag

8. Remove the driver lower air bag.
For additional information, refer to: Driver Lower Air Bag Module (501-20B Supplemental Restraint System, Removal and Installation).

All vehicles

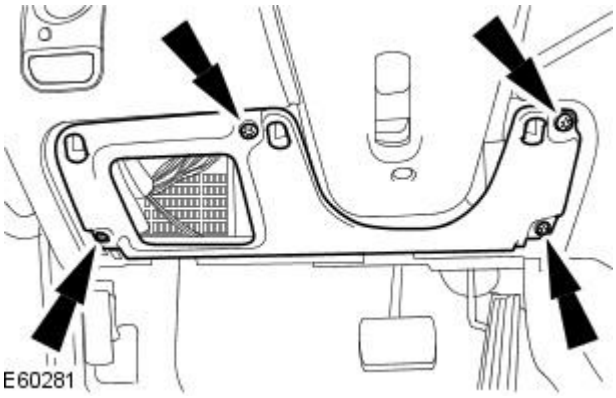

9. Remove the support panel.

Left-hand drive vehicles

10. Position the front wheels in a straight ahead position and centralize the steering wheel.

- Lock in position and remove the ignition key.

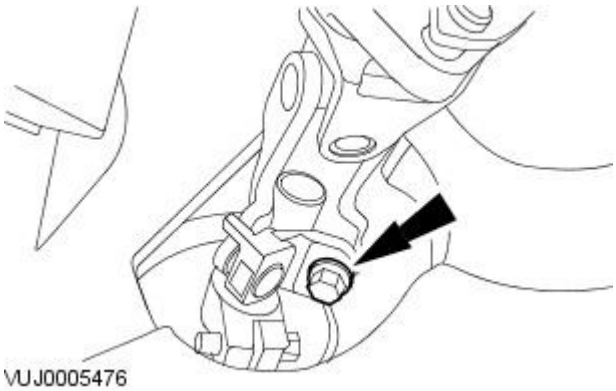

11. Detach the steering column.

- Remove and discard the steering column lower retaining bolt.

All vehicles

12. Remove the accelerator pedal.
For additional information, refer to: Accelerator Pedal (310-02 Acceleration Control, Removal and Installation).

13. Detach the wiring harness.

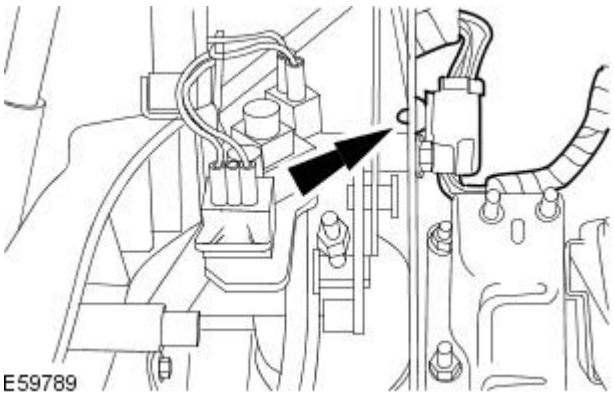

14. Remove the anti-collapse bracket clevis pin.

1. Remove the anti-collapse bracket clevis pin retaining clip.
2. Remove the anti-collapse bracket clevis pin.

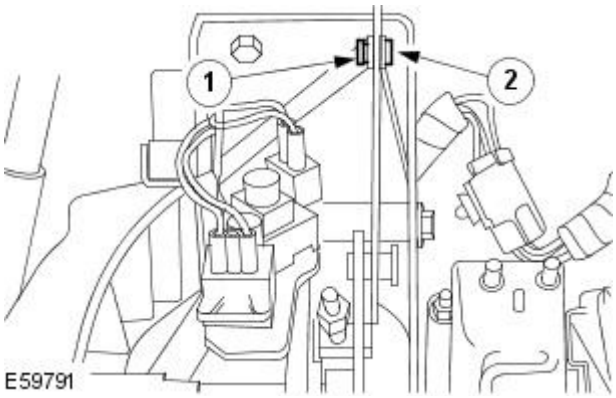

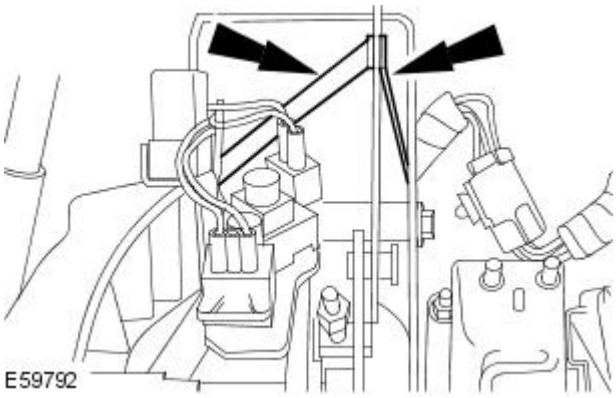

15. Reposition the anti-collapse bracket.

Right-hand drive vehicles

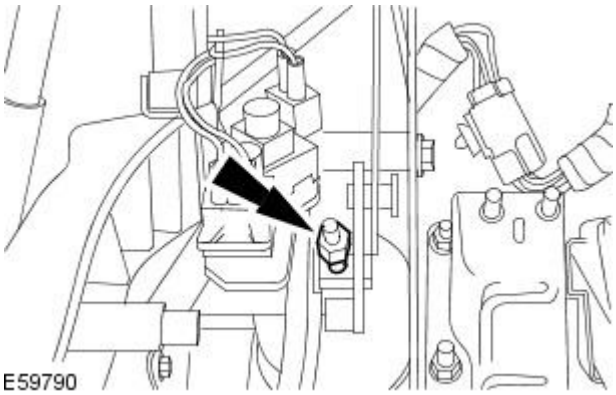

16. Remove the brake booster push rod retaining nut.

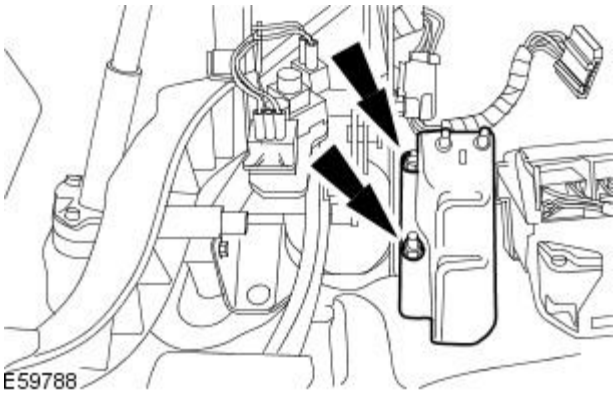

17. Remove the accelerator pedal mount bracket.

Left-hand drive vehicles

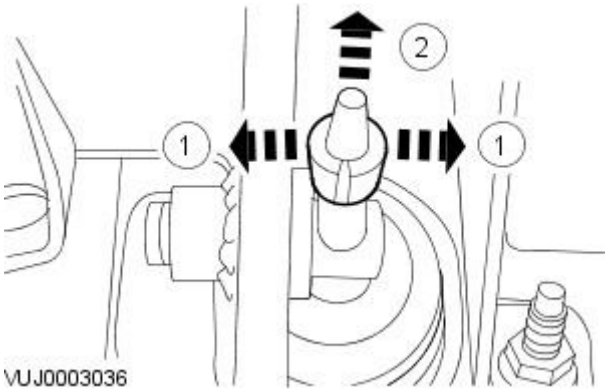

18. Remove the brake booster push rod retaining clip.

1. Release the brake booster push rod retaining clip.
2. Remove the brake booster push rod retaining clip.

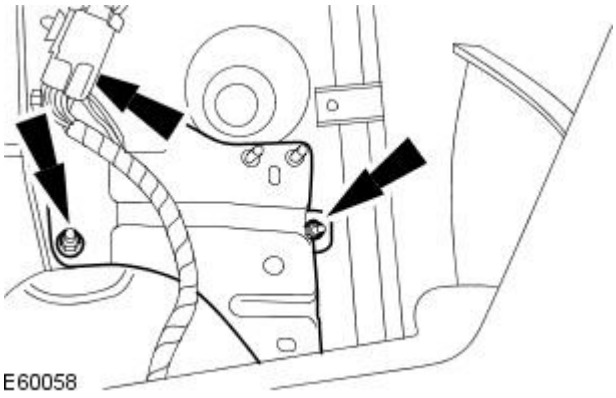

19. Remove the accelerator pedal mount bracket.

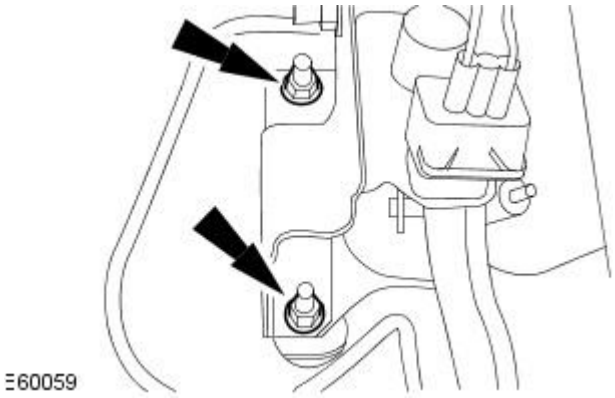

20. Remove the brake pedal and bracket retaining nuts.

All vehicles

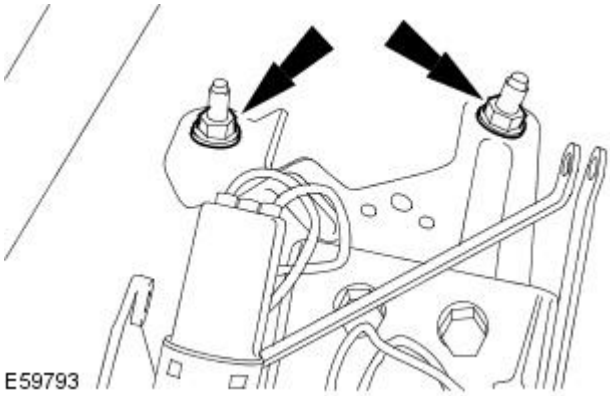

21. Remove the brake pedal and bracket retaining nuts.

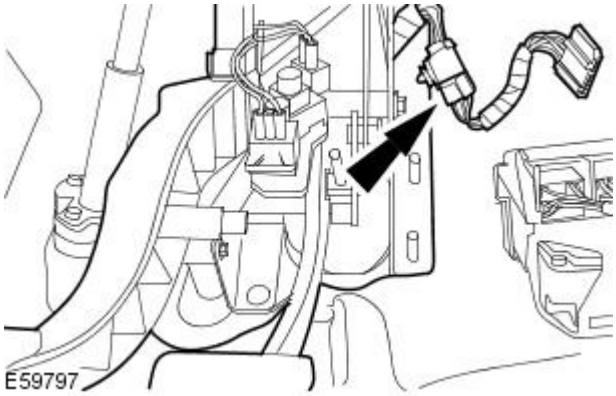

22. NOTE: Right-hand drive shown, left-hand drive similar.

Remove the brake pedal and bracket.

- Disconnect the electrical connector.

Installation

All vehicles

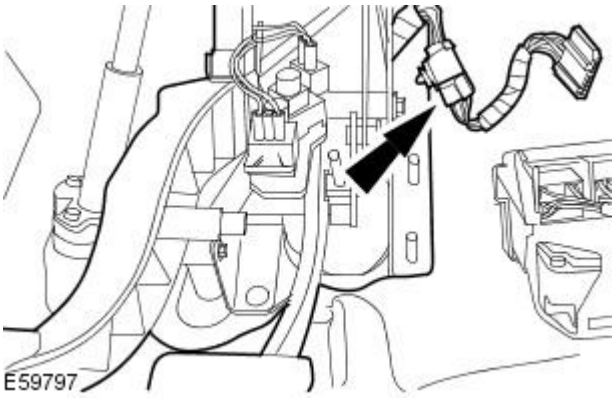

1. NOTE: Right-hand drive shown, left-hand drive similar.

Install the brake pedal and bracket.

- Connect the electrical connector.

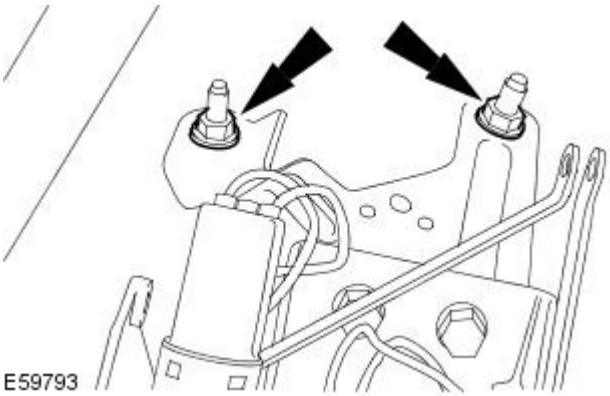

2. Install the brake pedal and bracket retaining nuts.

- Tighten to 25 Nm.

Left-hand drive vehicles

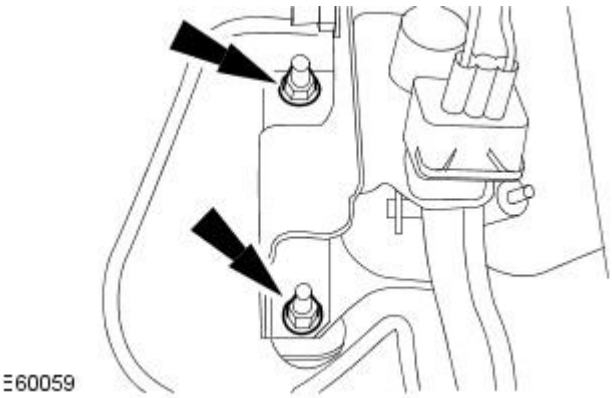

3. Install the brake pedal and bracket retaining nuts.

- Tighten to 25 Nm.

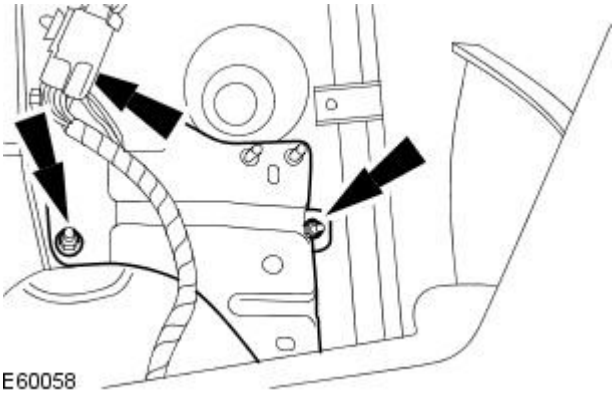

4. Install the accelerator pedal mount bracket.

- Tighten to 25 Nm.

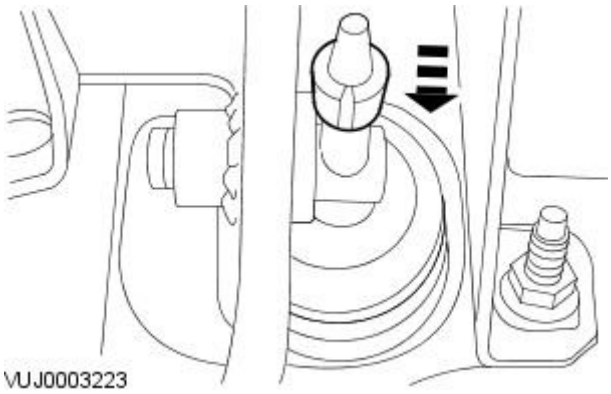

5. Install the brake booster push rod retaining clip.

Right-hand drive vehicles

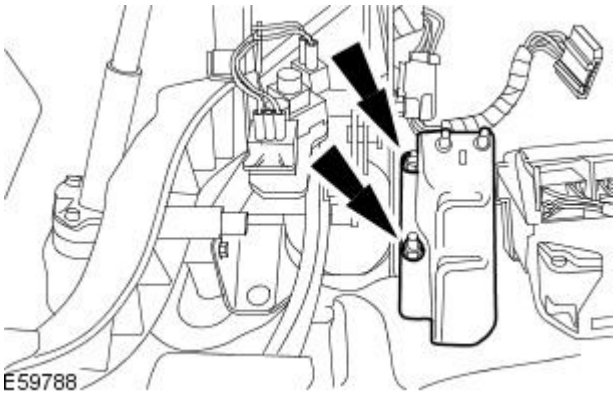

6. Install the accelerator pedal mount bracket.

- Tighten to 25 Nm.

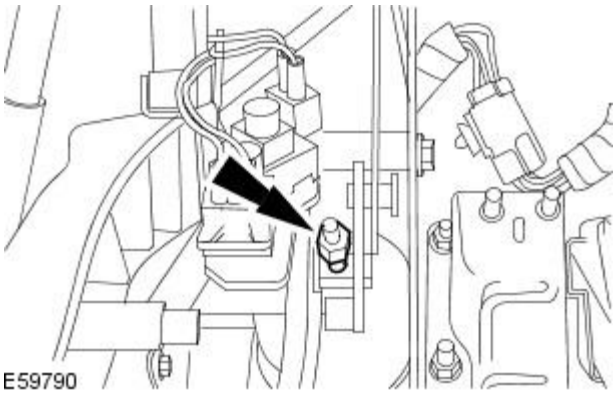

7. Install the brake booster push rod retaining nut.

- Tighten to 3 Nm.

All vehicles

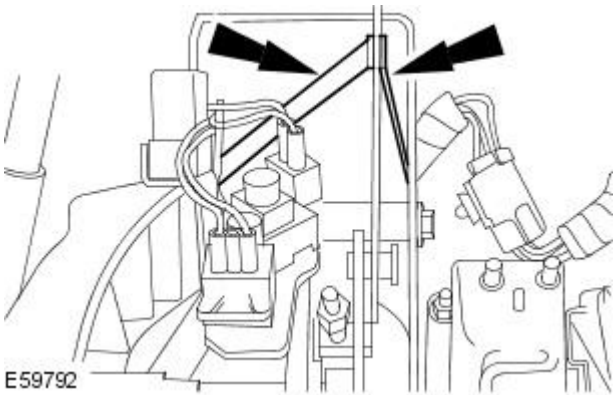

8. Reposition the anti-collapse bracket.

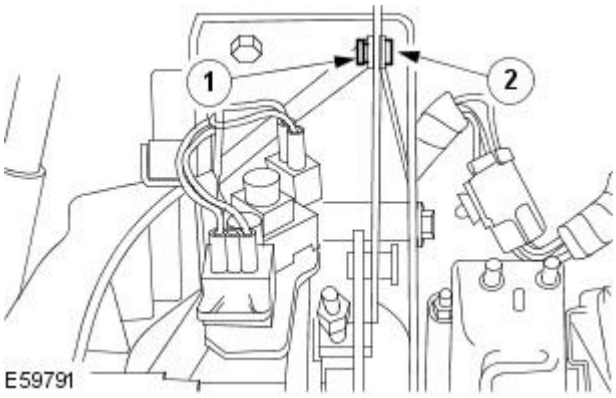

9. Install the anti-collapse bracket clevis pin retaining clip.

1. Install the anti-collapse bracket clevis pin.
2. Install the anti-collapse bracket clevis pin retaining clip.

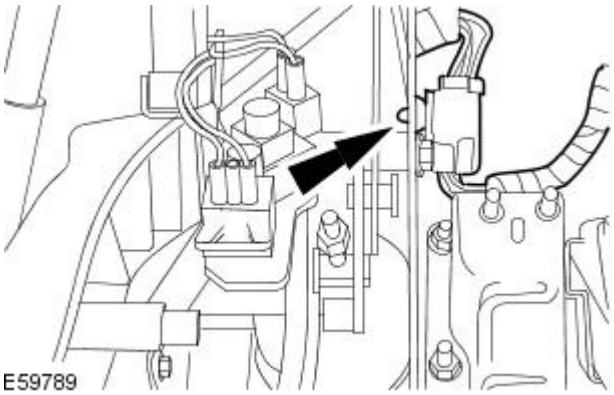

10. Attach the wiring harness.

11. Install the accelerator pedal.
For additional information, refer to: Accelerator Pedal (310-02 Acceleration Control, Removal and Installation).

Left-hand drive vehicles

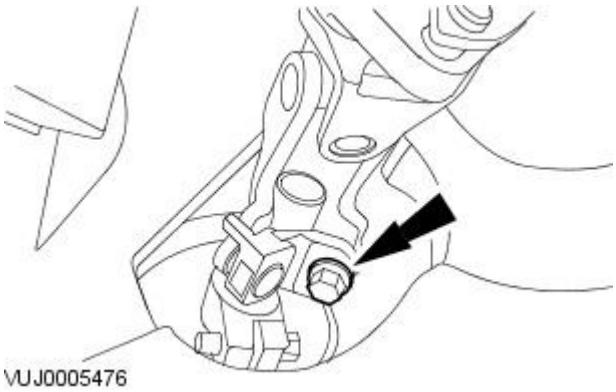

12. Attach the steering column.

- Install a new steering column lower retaining bolt.
- Tighten to 25 Nm.

All vehicles

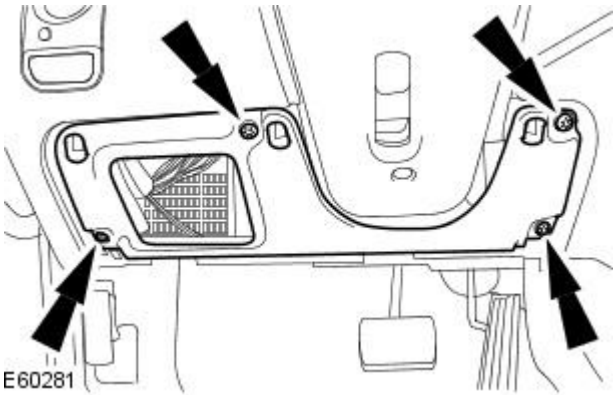

13. Install the support panel.

Vehicles with driver lower air bag

14. Install the driver lower air bag.
For additional information, refer to: Driver Lower Air Bag Module (501-20B Supplemental Restraint System, Removal and Installation).

Vehicles without driver lower air bag

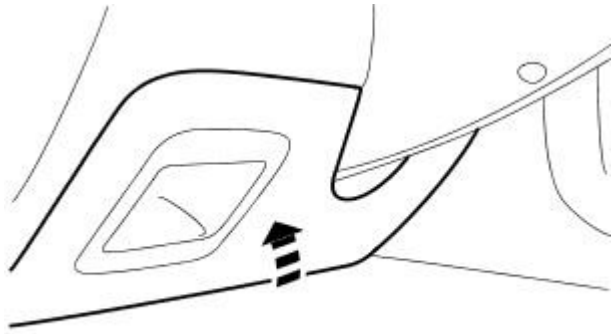

E60245

15. Install the driver side instrument panel lower trim panel.

Right-hand drive vehicles

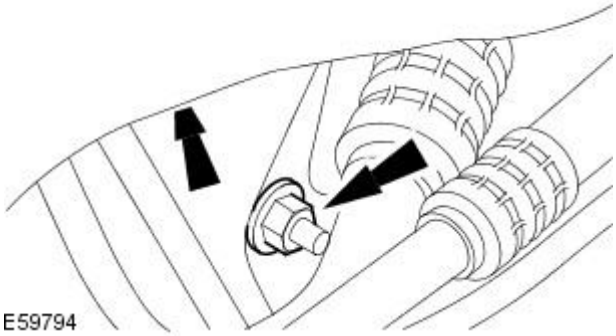

E59794

16. Install the brake pedal and bracket retaining nuts.

- Tighten to 25 Nm.

Vehicles with manual transmission

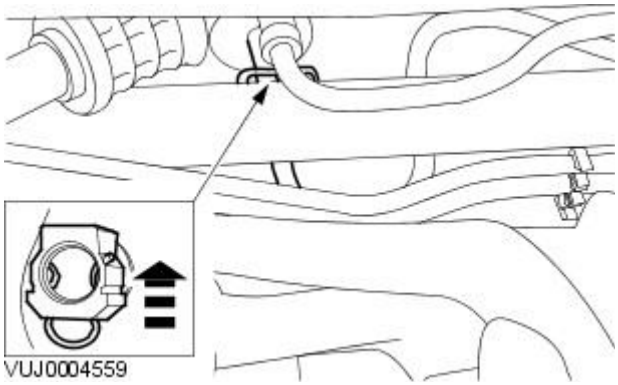

VUJ0004559

17. CAUTION: If brake fluid is spilt on the paintwork, the affected area must be immediately washed down with cold water.

• NOTE: Remove the blanking plugs.

• NOTE: Reposition the retaining clip.

• NOTE: Right-hand drive shown, left-hand drive similar.

Connect the clutch slave cylinder supply line to the clutch master cylinder.

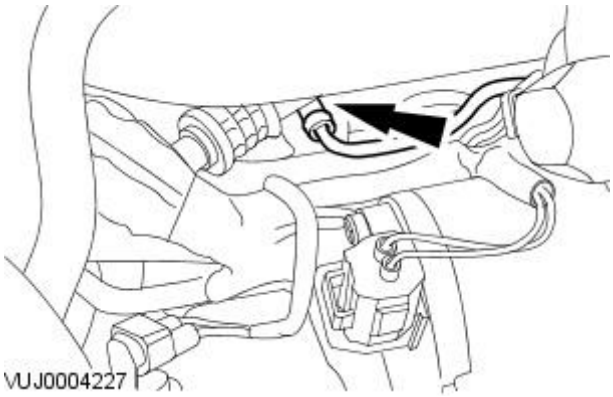

VUJ0004227

18. CAUTION: If brake fluid is spilt on the paintwork, the affected area must be immediately washed down with cold water.

• NOTE: Remove the blanking plugs.

• NOTE: Right-hand drive shown, left-hand drive similar.

Connect the clutch master cylinder supply line.

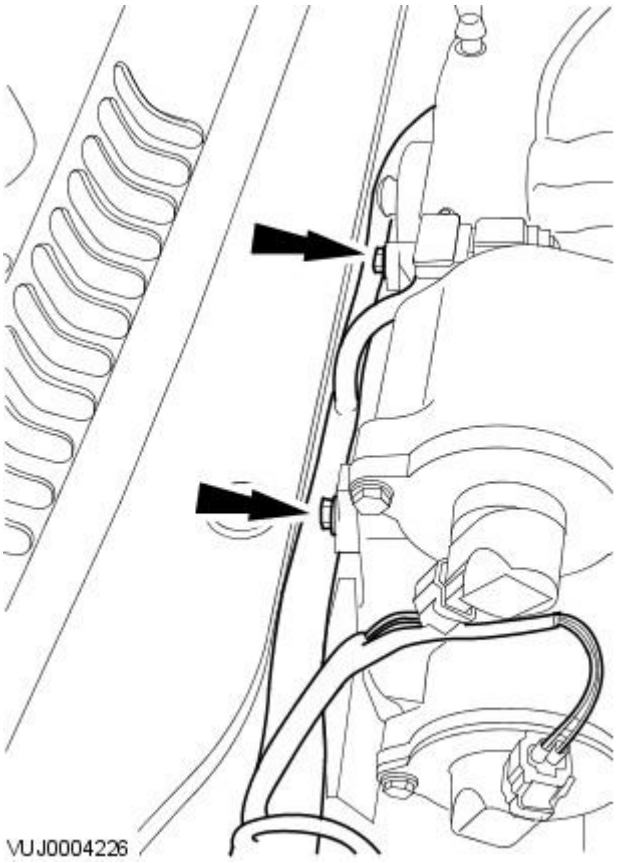

19. NOTE: Vehicles with 2.5L or 3.0L engine only.

Attach the engine wiring harness.

- Tighten to 10 Nm.

20. Bleed the hydraulic clutch system.
For additional information, refer to: Clutch System Bleeding - Vehicles With: 6-Speed Manual Transaxle - MMT6 (308-00 Manual Transmission/Transaxle and Clutch - General Information, General Procedures).

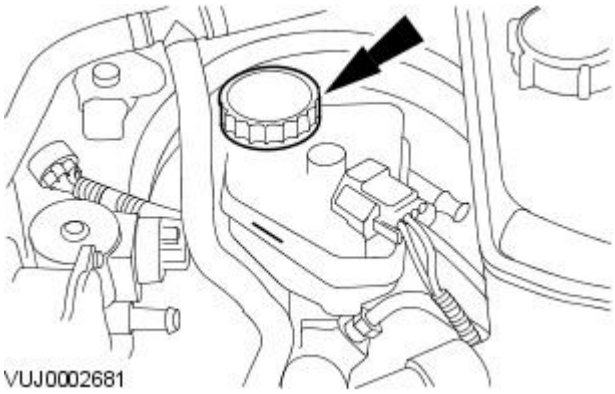

21. CAUTION: If brake fluid is spilt on the paintwork, the affected area must be immediately washed down with cold water.

• NOTE: Make sure the filler cap does not become contaminated.

Install the brake fluid reservoir filler cap.

Hydraulic Brake Actuation - Brake Pedal Cross-Shaft

Removal and Installation

Special Tool(s)	
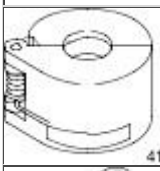 41203	Disconnect tool, fuel line. 310-076
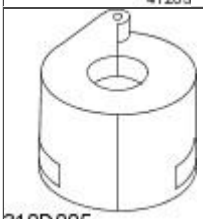 310D005	Disconnect tool, fuel line. 310-D005
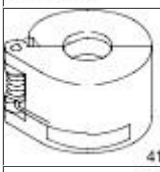 41203	Disconnect tool, fuel line. 412-038
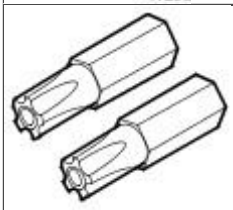 418-535	5 Point Security Torx Bit. 418-535

Removal

All vehicles

1. Disconnect the battery ground cable.
   For additional information, refer to: Battery Disconnect and Connect (414-01 Battery, Mounting and Cables, General Procedures).
2. Recover the air conditioning (A/C) refrigerant.
   For additional information, refer to: Air Conditioning (A/C) System Recovery, Evacuation and Charging (412-00 Climate Control System - General Information, General Procedures).

Vehicles with diesel particulate filter

3. Remove the air cleaner outlet pipe.
   For additional information, refer to: Air Cleaner Outlet Pipe (303-12B Intake Air Distribution and Filtering - 2.0L Duratorq-TDCi/2.2L Duratorq-TDCi (110kW/150PS) - Puma, Removal and Installation).
4. NOTE: Note the orientation of the retaining clip.

   Detach the diesel particulate filter (DPF) high-pressure and low-pressure hoses.

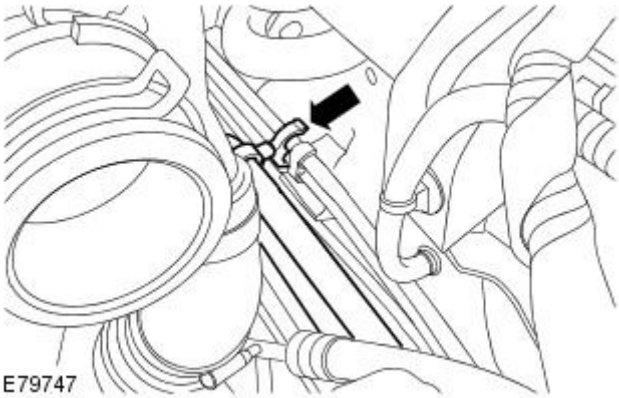

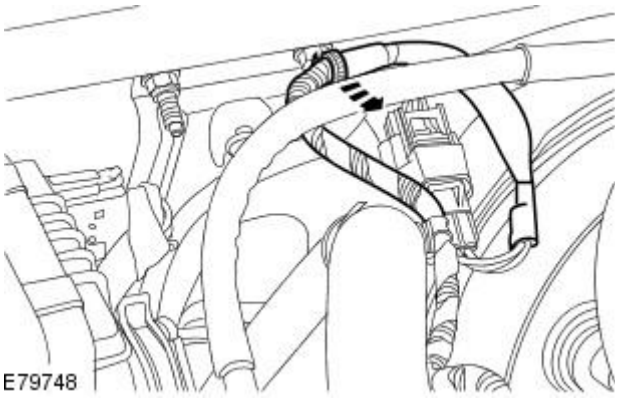

5. Detach the wiring harness.

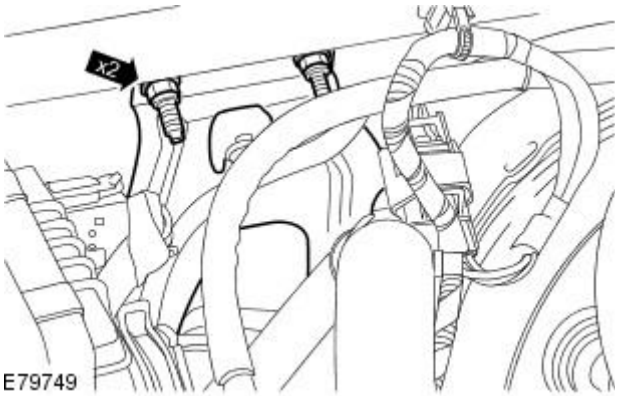

6. Detach the DPF differential pressure sensor retaining bracket.

- Remove the retaining nuts.

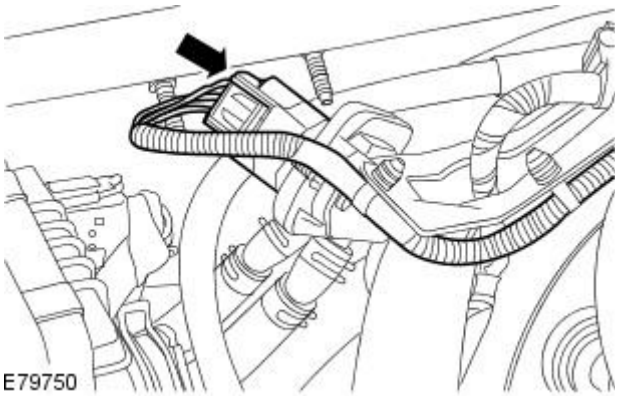

7. Disconnect the DPF differential pressure sensor electrical connector.

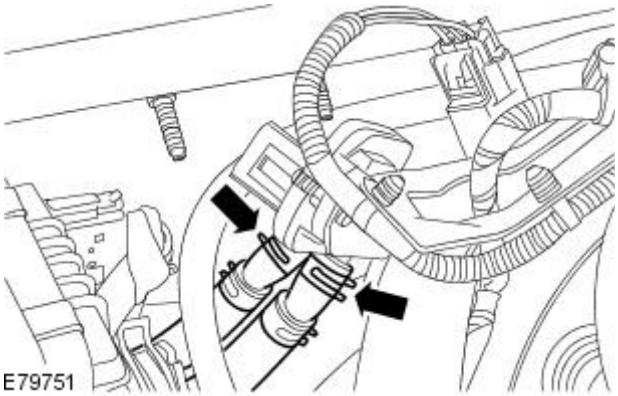

8. NOTE: Note the orientation of the DPF differential pressure high-pressure and low-pressure hoses and make sure they are installed in the same position.

Disconnect the DPF differential pressure sensor high-pressure and low-pressure hoses.

All vehicles

9. Remove the brake booster.
For additional information, refer to: Brake Booster - RHD AWD/RHD FWD (206-07 Power Brake Actuation, Removal and Installation).

All except vehicles with diesel engine

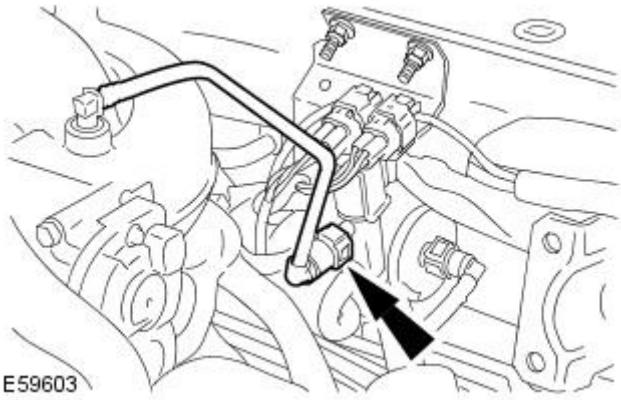

10. Disconnect the upper fuel vapor hose from the evaporative emission canister purge valve.

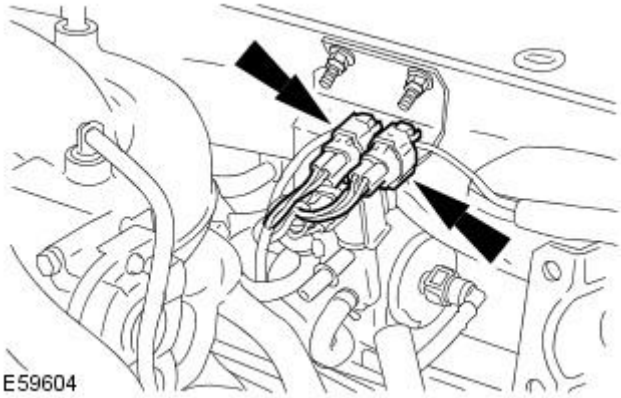

11. Detach the oxygen sensor electrical connectors.

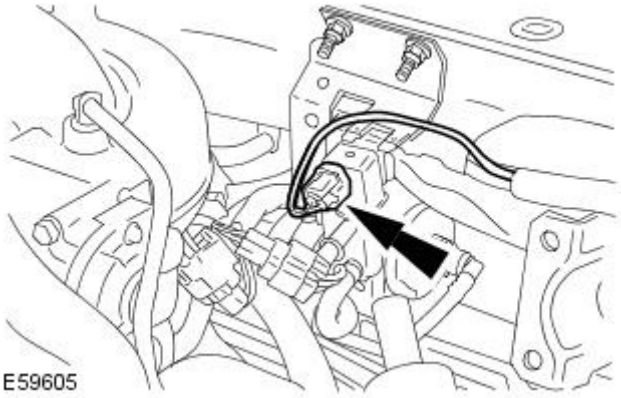

12. Disconnect the evaporator solenoid electrical connector.

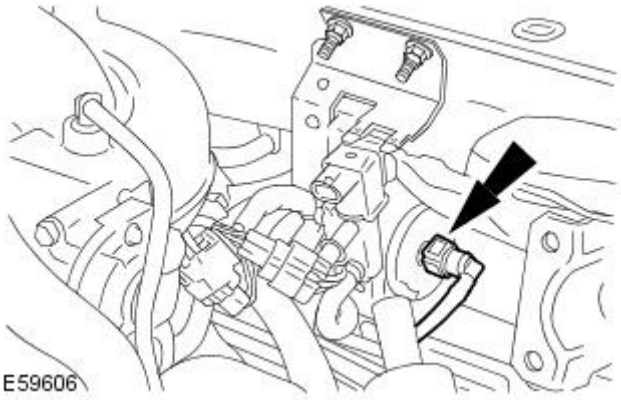

13. Disconnect the lower fuel vapor hose from the evaporative emission canister purge valve.

14. Detach the wiring harness from the retaining bracket.

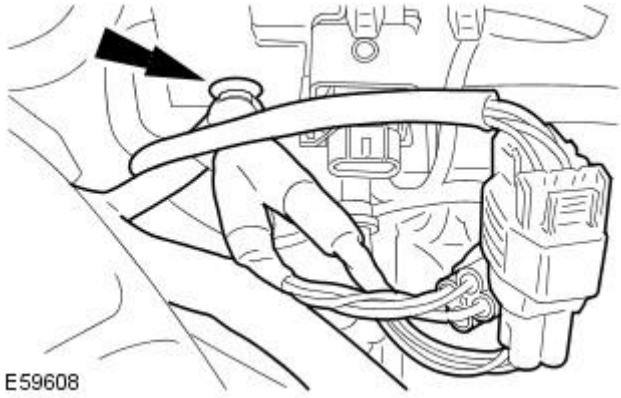

15. Remove the evaporative emission canister purge valve retaining bracket.

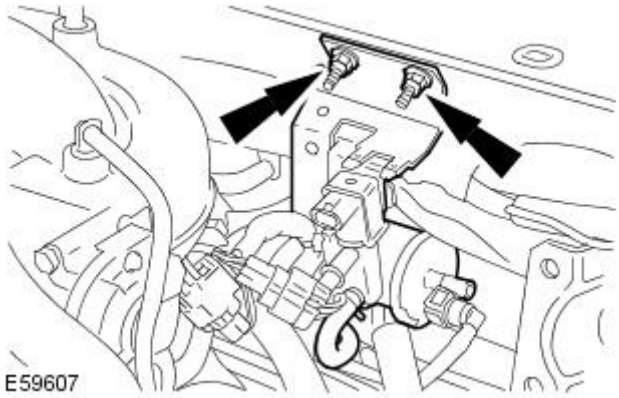

Vehicles with 2.0L engine

16. Remove the intake manifold.
For additional information, refer to: Intake Manifold (303-01A Engine - 2.0L NA V6 - AJV6/2.5L NA V6 - AJV6/3.0L NA V6 - AJ27, In-vehicle Repair).

All vehicles

17. Remove the A/C refrigerant line retaining clip.

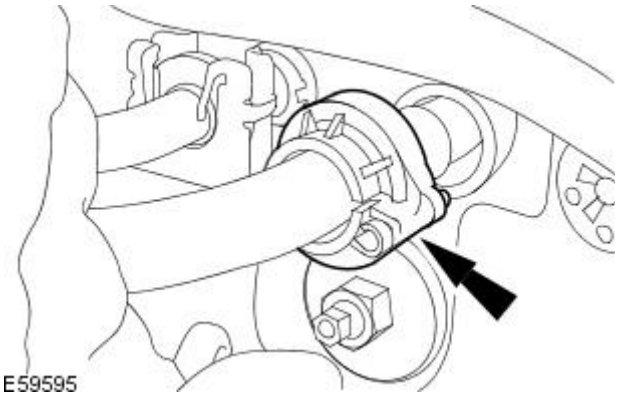

18. NOTE: Install blanking plugs to the exposed ports.

Using the special tool, disconnect the A/C refrigerant line.

- Remove and discard the O-ring seals.

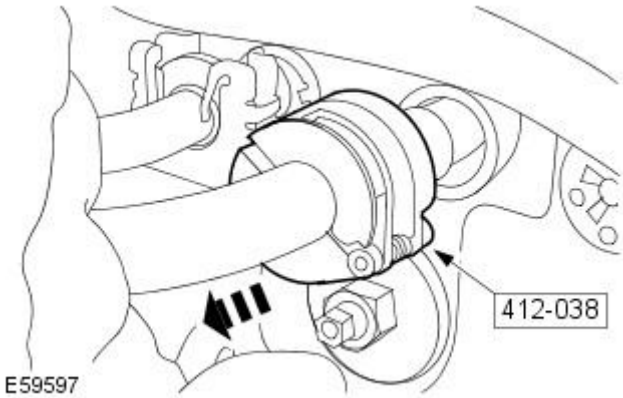

19. Remove the A/C refrigerant line retaining clip.

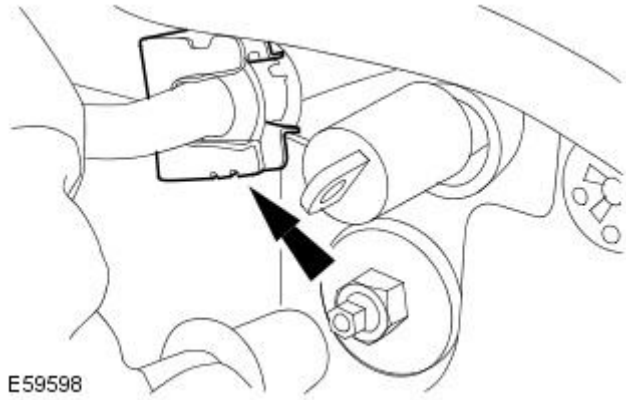

20. NOTE: Install blanking plugs to the exposed ports.

Using the special tool, disconnect the A/C refrigerant line.

- Remove and discard the O-ring seals.

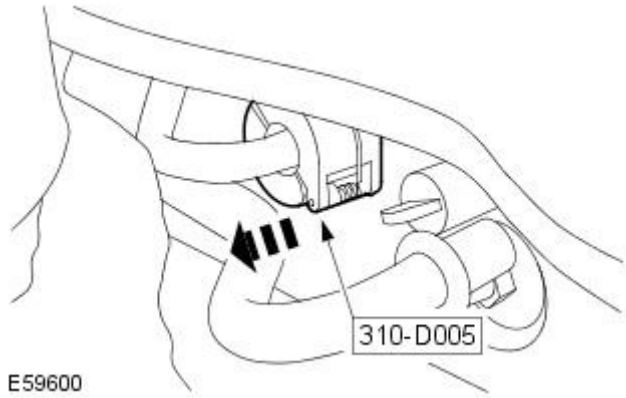

All except vehicles with diesel engine

21. NOTE: The bolt remains captive in the engine control module (ECM) electrical connector.

Using special tool 418-535, disconnect the ECM electrical connector.

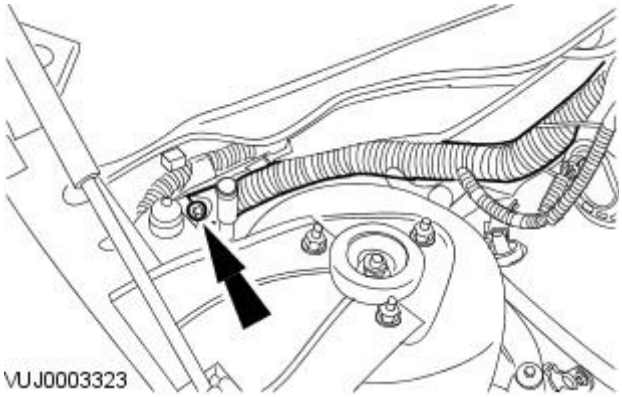

Vehicles with diesel engine

22. NOTE: Install blanking plugs to the fuel pump fuel supply and return line male and female connectors.

Disconnect the fuel pump fuel supply and return lines.
For additional information, refer to: Quick Release Coupling - Push Connect (310-00 Fuel System - General Information, General Procedures).

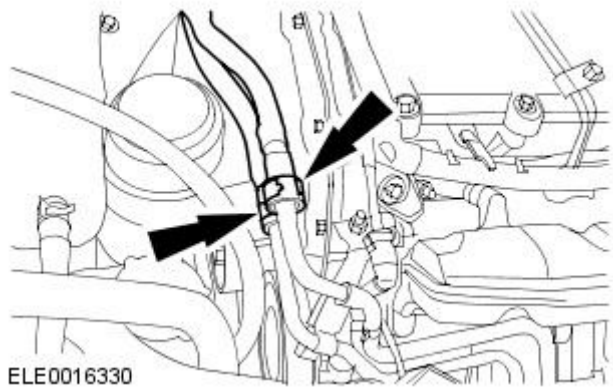

23. Disconnect the engine wiring harness electrical connector.

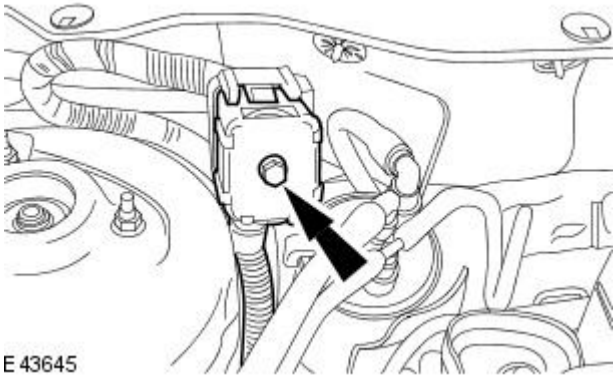

24. Detach the engine wiring harness retaining clip.

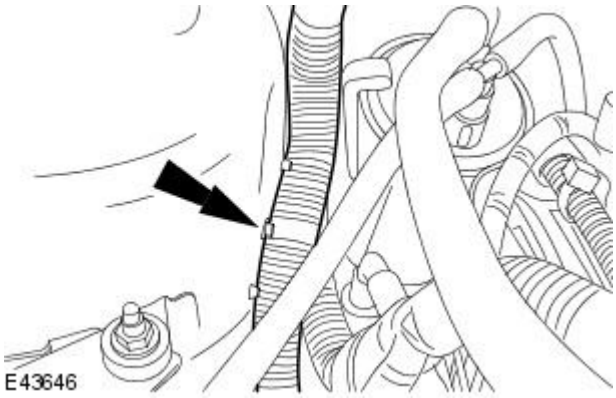

25. Detach the engine wiring harness electrical connector.

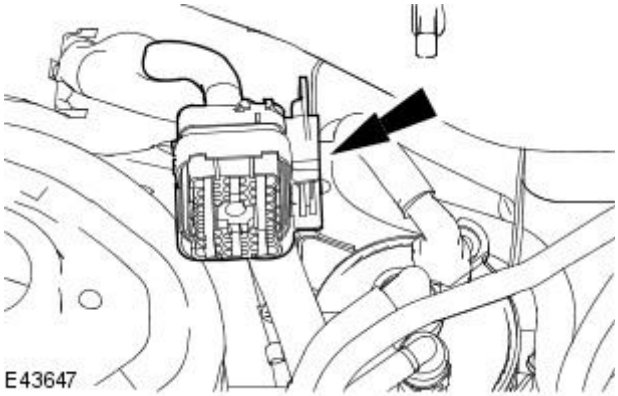

26. NOTE: The bolt remains captive in the ECM electrical connector.

Disconnect the ECM harness electrical connector.

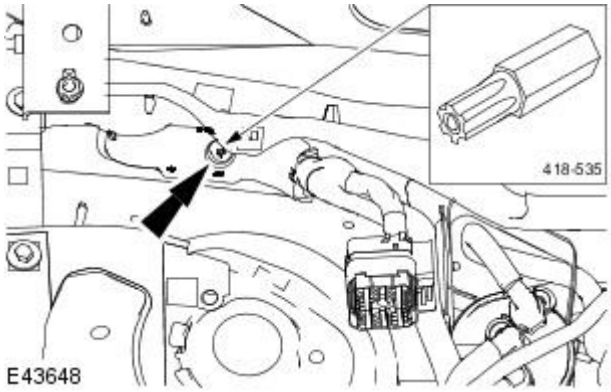

27. Detach the engine wiring harness retaining clip.

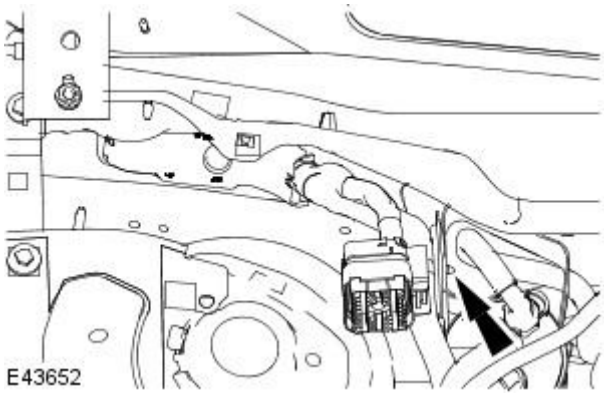

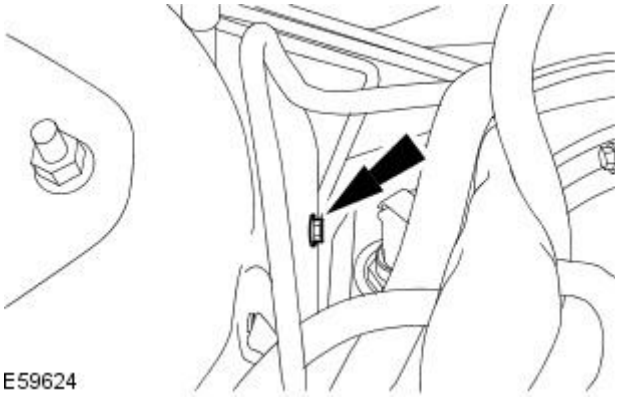

28. Remove the brake pedal cross-shaft support bracket retaining bolt.

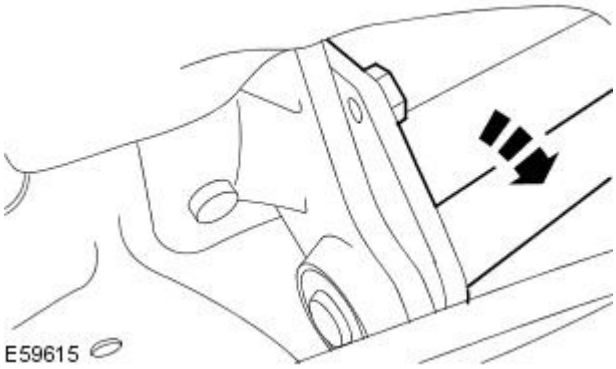

29. Rotate the brake pedal cross-shaft clockwise.

30. Remove the brake pedal and bracket.
For additional information, refer to: Brake Pedal and Bracket (206-06 Hydraulic Brake Actuation, Removal and Installation).

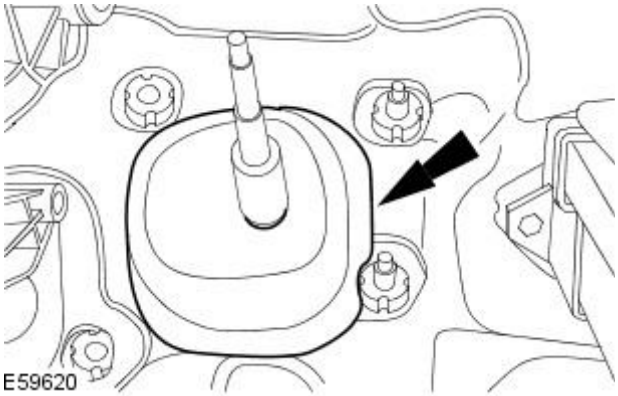

31. Remove the sound insulation.

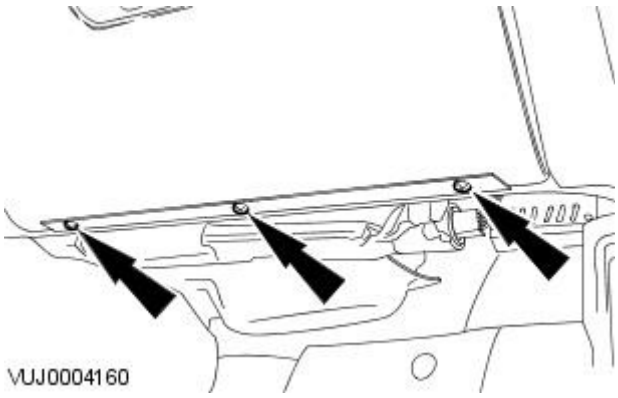

32. Remove the glove compartment hinge retaining screws.

33. Remove the glove compartment finisher trim.

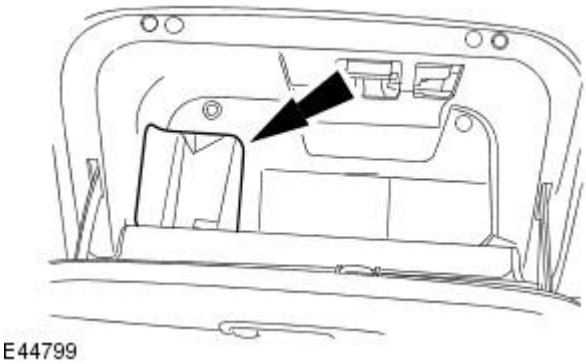

34. Remove the glove compartment.

- Remove the glove compartment retaining screws.

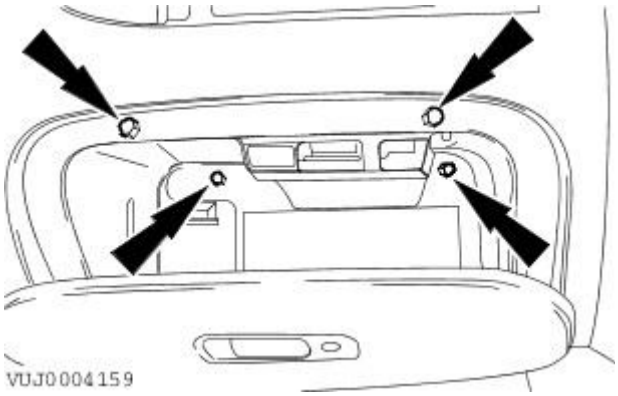

35. Remove the blower motor trim.

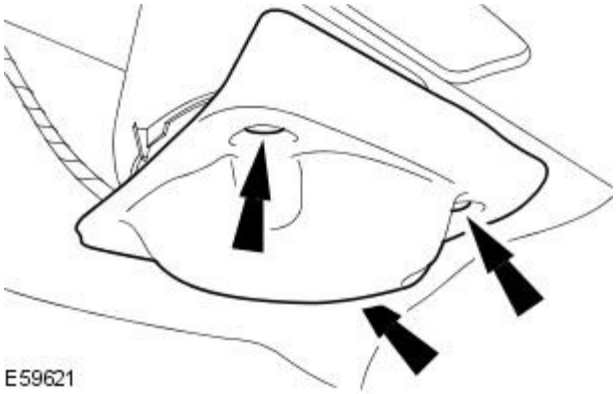

36. Remove the central junction box (CJB) retaining nut.

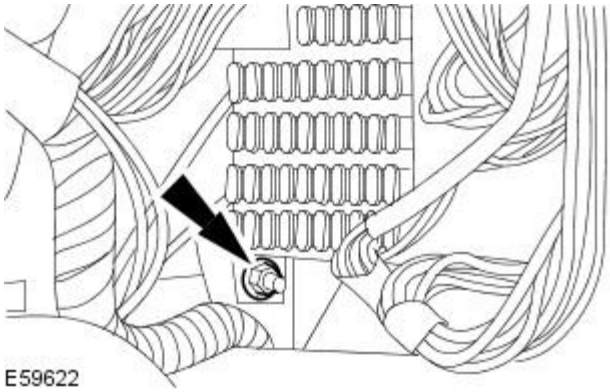

37. Detach the CJB.

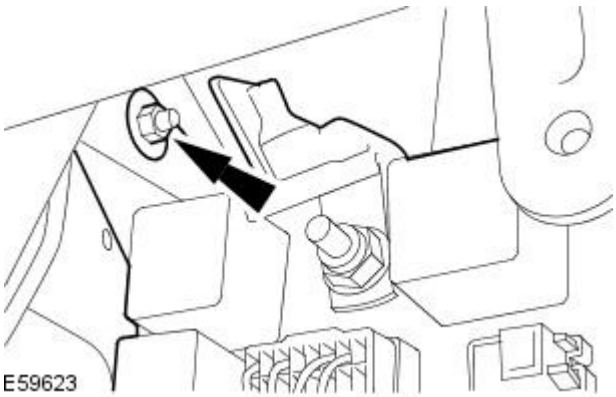

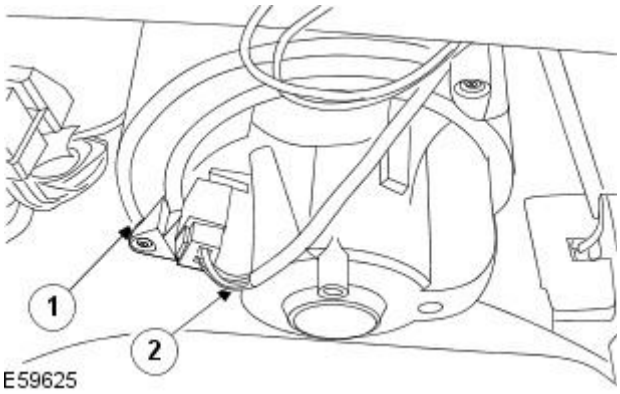

38. Reposition the brake pedal cross-shaft securing bracket.

1. Undo but do not remove the brake pedal cross-shaft securing bracket retaining nut.
2. Reposition the brake pedal cross-shaft securing bracket.

39. Remove the right-hand fender splash shield.
For additional information, refer to: Fender Splash Shield (501-02 Front End Body Panels, Removal and Installation).

40. Remove the refrigerant lines retaining clips.

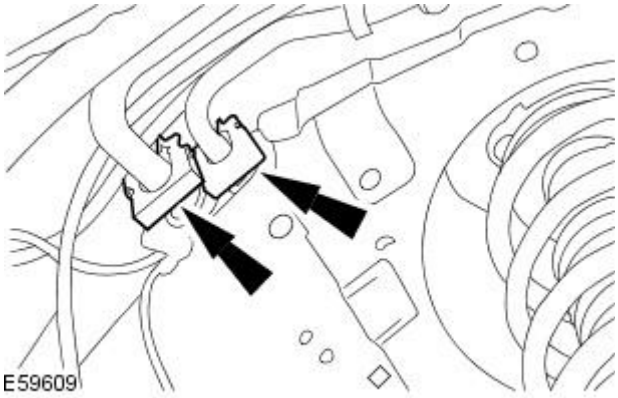

41. NOTE: Install blanking plugs to the exposed ports.

Using the special tool, disconnect the A/C refrigerant line.

- Remove and discard the O-ring seals.

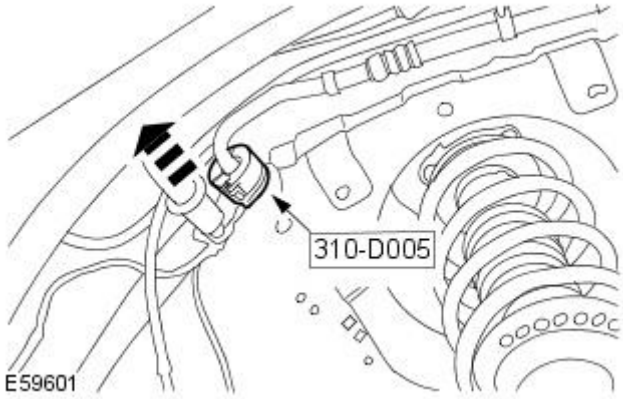

42. NOTE: Install blanking plugs to the exposed ports.

Using the special tool, disconnect the A/C refrigerant line.

- Remove and discard the O-ring seals.

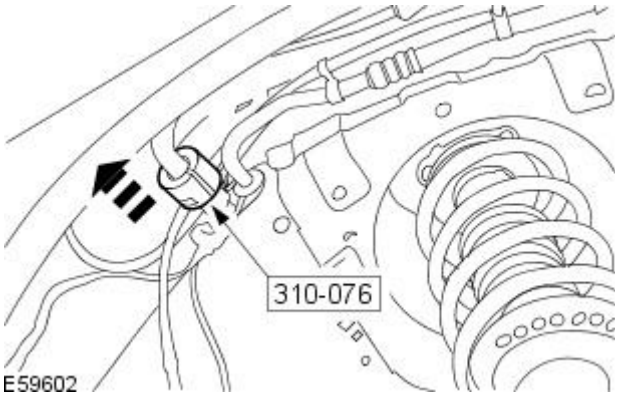

43. Detach the brake lines.

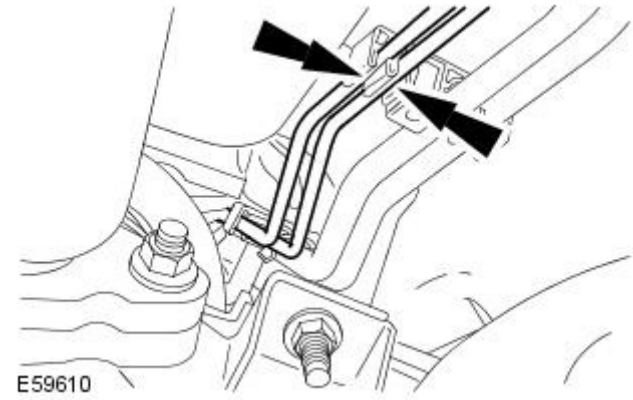

44. Remove the A/C refrigerant line.

- Remove the retaining clip.

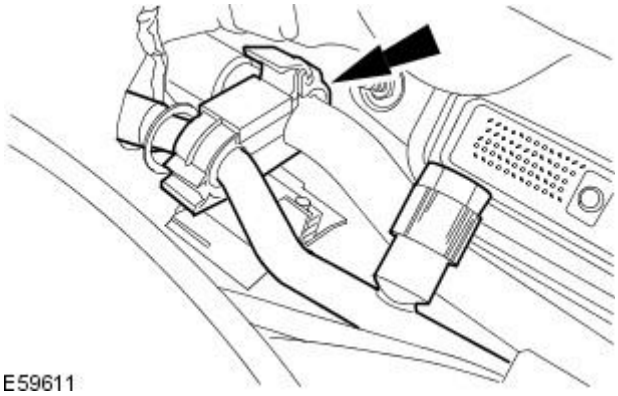

45. Remove the A/C refrigerant line.

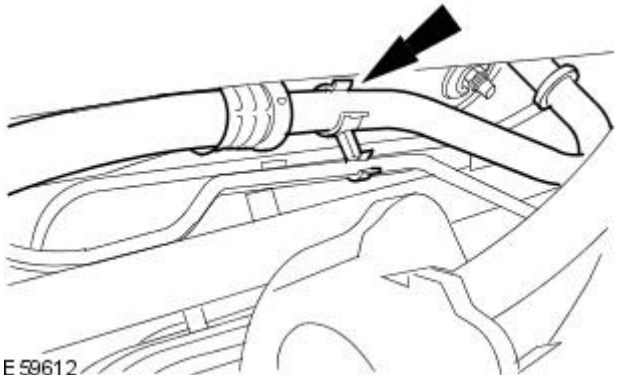

46. NOTE: Note the position of the brake pedal cross-shaft spring.

Detach the brake pedal cross-shaft spring.

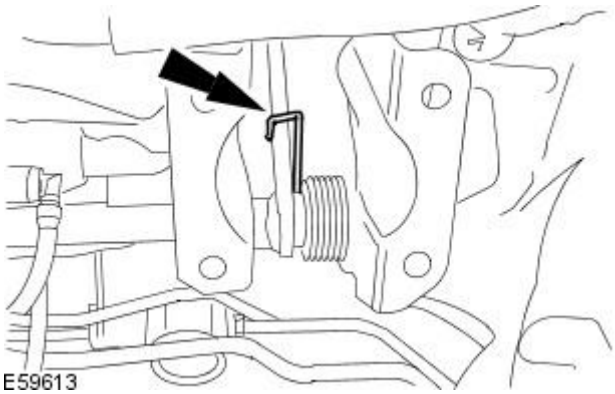

47. Detach the brake pedal cross-shaft left-hand mounting bracket.

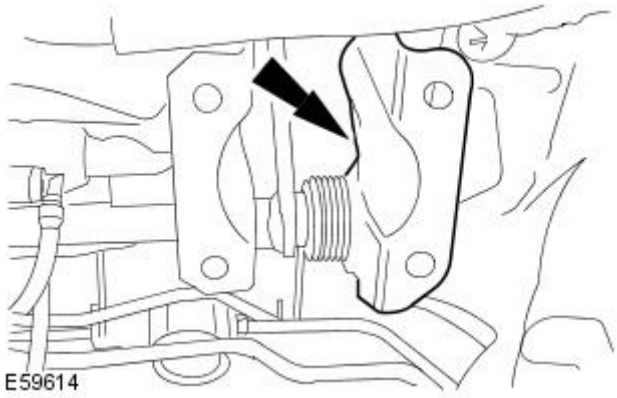

48. Detach the brake pedal cross-shaft grommet.

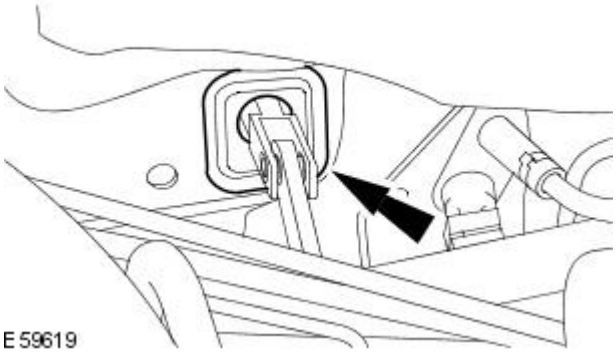

49. NOTE: Remove the brake pedal cross-shaft spring bush.

Remove the brake pedal cross-shaft.

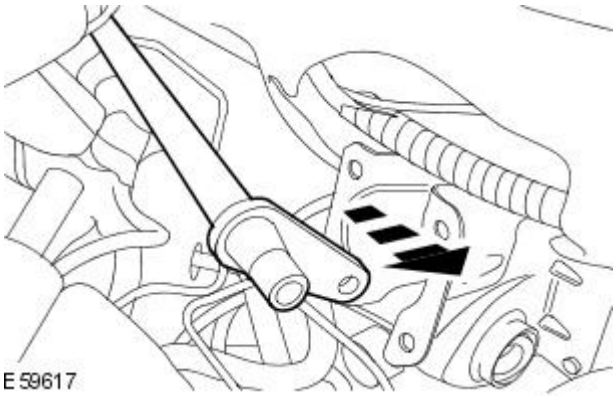

Installation

All vehicles

1. NOTE: Make sure that the brake pedal cross-shaft bush is correctly positioned.

Install the brake pedal cross-shaft.

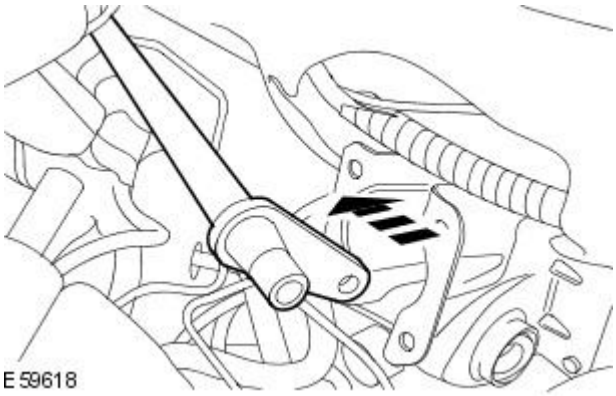

2. Attach the brake pedal cross-shaft grommet.

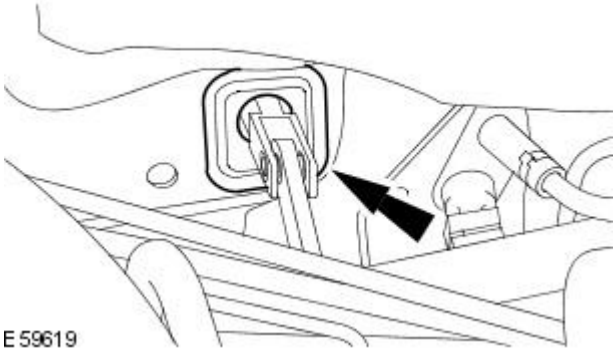

3. Attach the brake pedal cross-shaft left-hand mounting bracket.

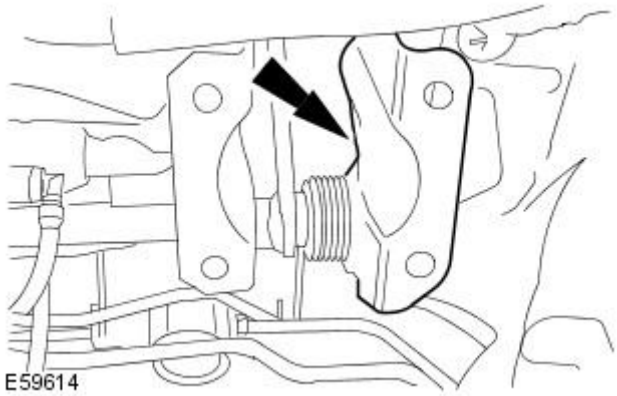

4. NOTE: Make sure the brake pedal cross-shaft spring is located in its original position.

Attach the brake pedal cross-shaft spring.

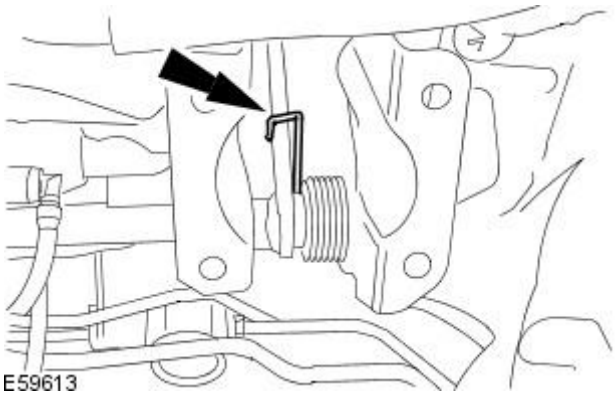

5. Install the A/C refrigerant line.

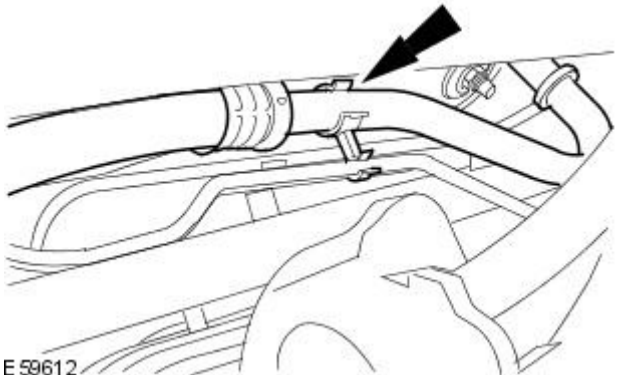

6. Install the A/C refrigerent line.

- Install the retaining clip.

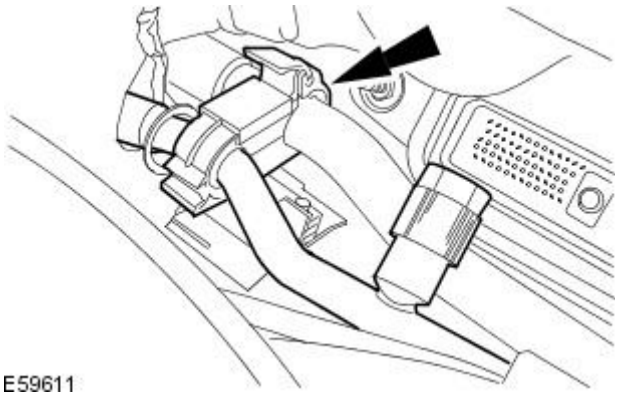

7. Attach the brake lines.

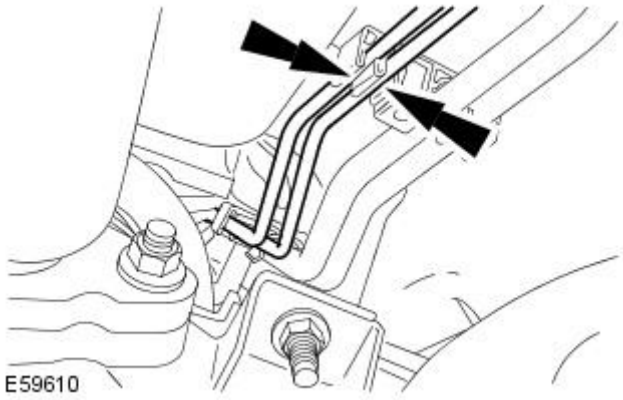

8. NOTE: Remove the blanking plugs.

Connect the A/C refrigerant line.

- Install new O-ring seals.

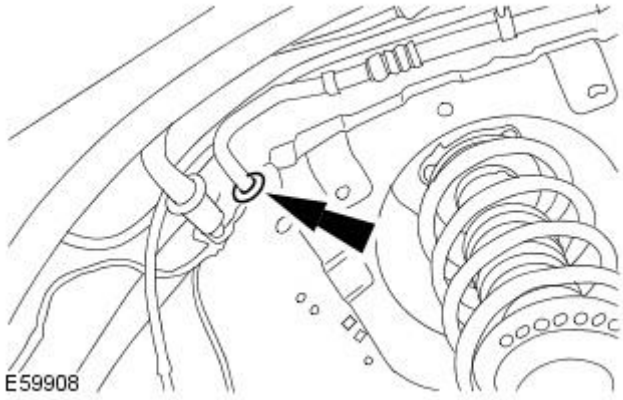

9. NOTE: Remove the blanking plugs.

Connect the A/C refrigerant line.

- Install new O-ring seals.

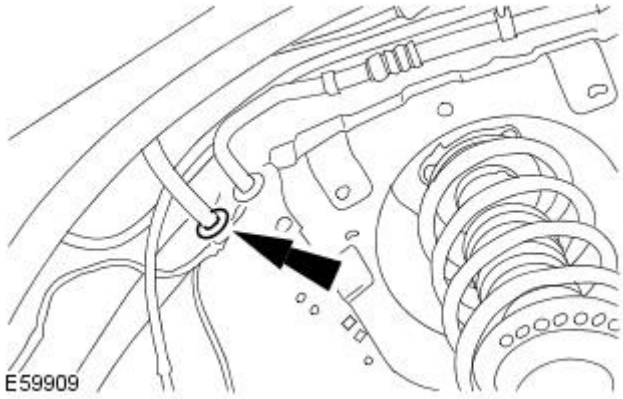

10. Install the A/C refrigerant lines retaining clips.

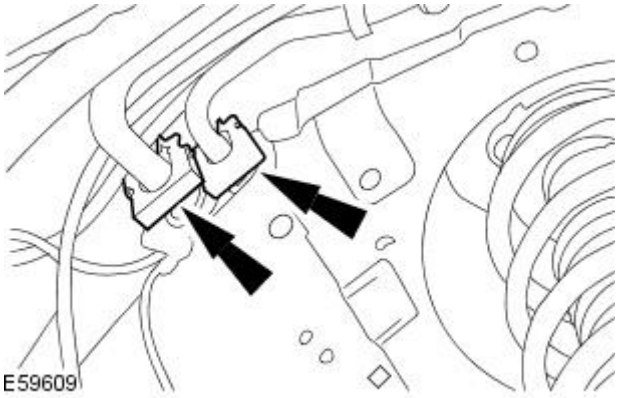

11. Install the right-hand fender splash shield.
For additional information, refer to: Fender Splash Shield (501-02 Front End Body Panels, Removal and Installation).

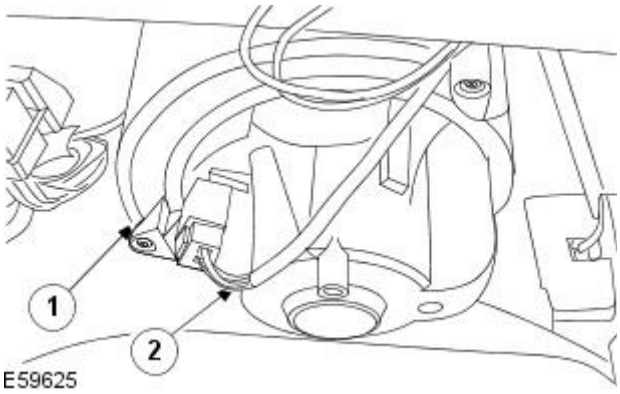

12. Reposition the brake pedal cross-shaft securing bracket.

1. Tighten the brake pedal cross-shaft securing bracket retaining nut.
2. Reposition the brake pedal cross-shaft securing bracket.

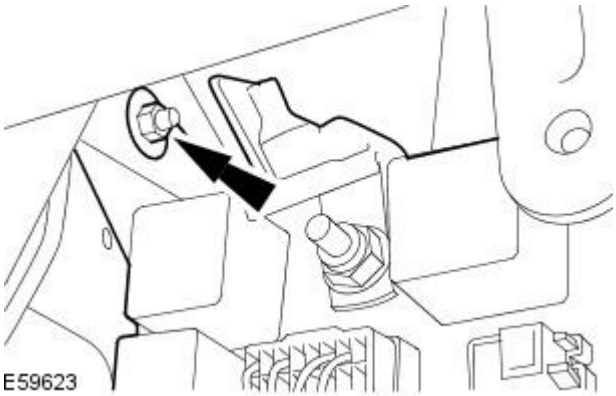

13. Attach the CJB.

- Tighten to 6 Nm.

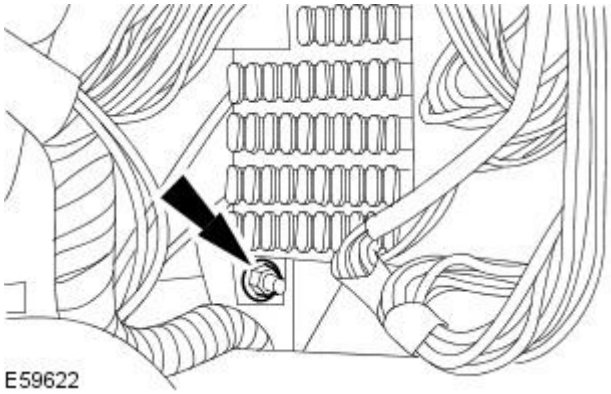

14. Install the CJB retaining nut.

- Tighten to 6 Nm.

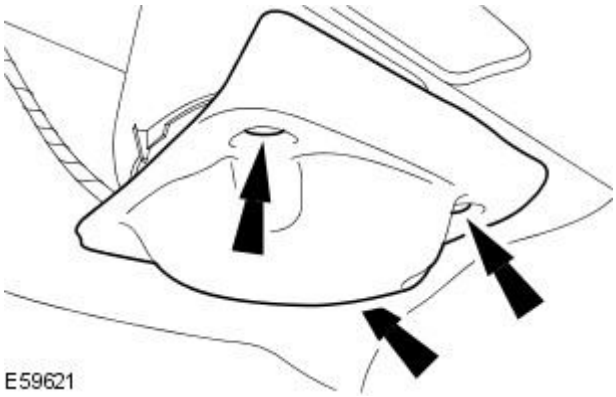

15. Install the blower motor trim.

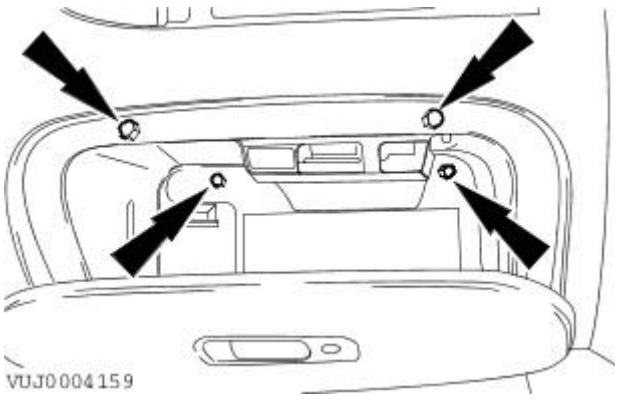

16. Install the glove compartment.

- Install the passenger compartment retaining screws.

17. Install the glove compartment finisher trim.

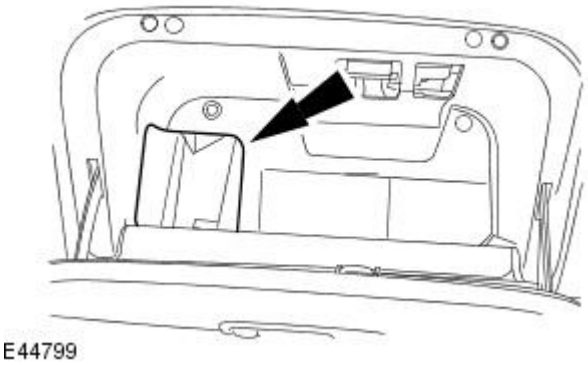

18. Install the glove compartment hinge retaining screws.

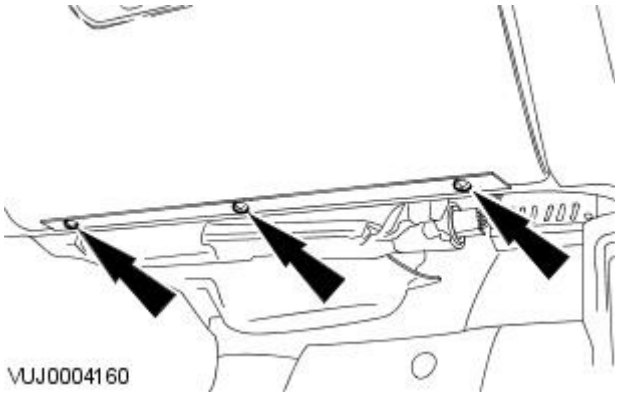

19. Install the sound insultation.

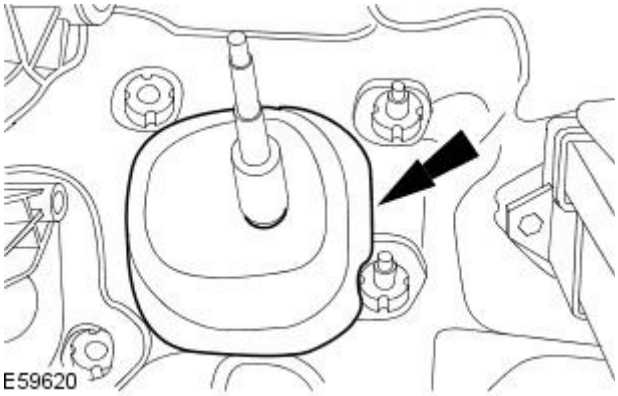

20. Install the pedal box.
For additional information, refer to: Brake Pedal and Bracket (206-06 Hydraulic Brake Actuation, Removal and Installation).

21. Rotate the brake pedal cross-shaft counter-clockwise.

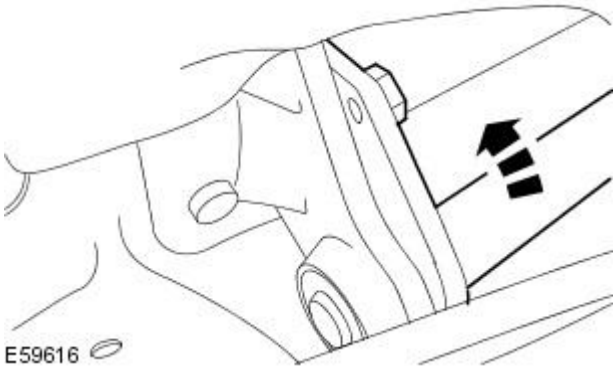

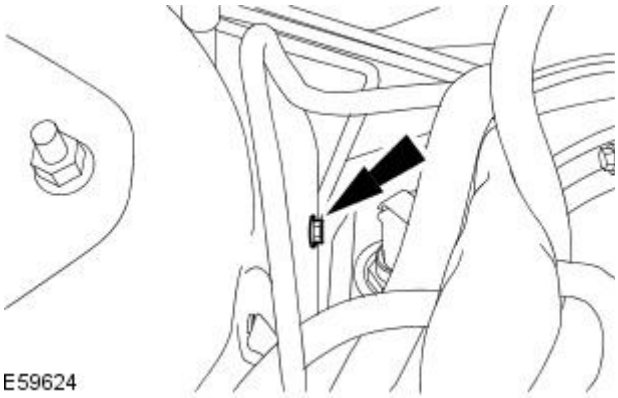

22. Install the brake pedal cross-shaft support bracket retaining bolt.

- Tighten to 25 Nm.

All except vehicles with diesel engine

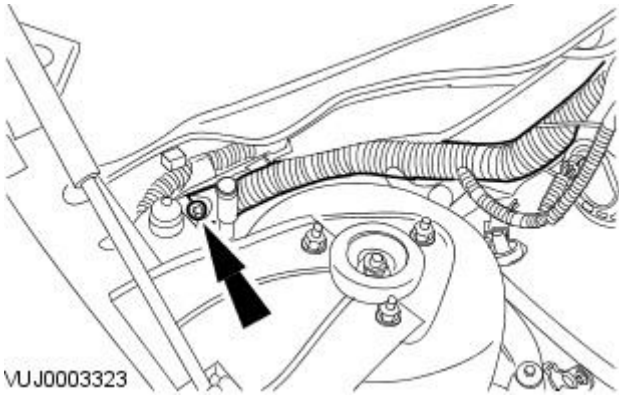

23. Connect the ECM electrical connector.

- Using special tool 418-535, tighten to 5 Nm.

Vehicles with diesel engine

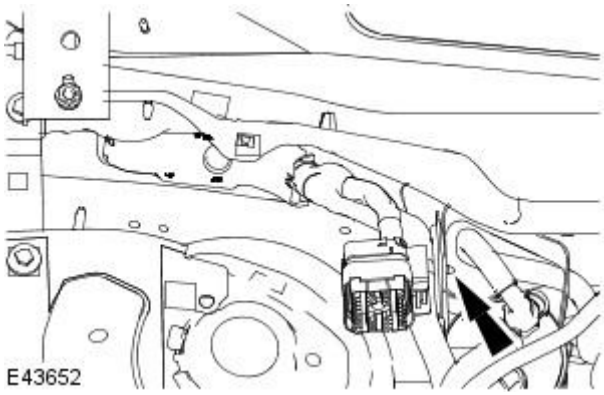

24. Attach the engine wiring harness retaining clip.

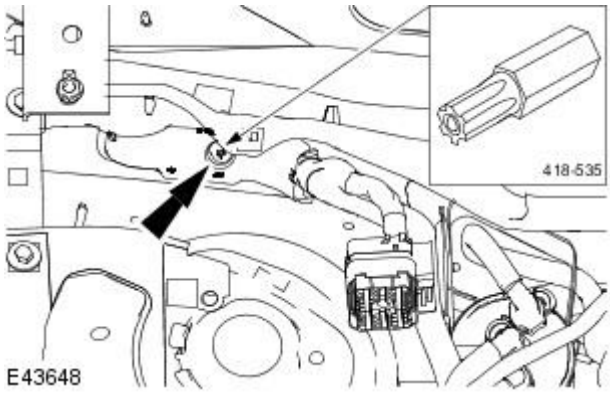

25. Connect the ECM electrical connector.

- Tighten to 5 Nm.

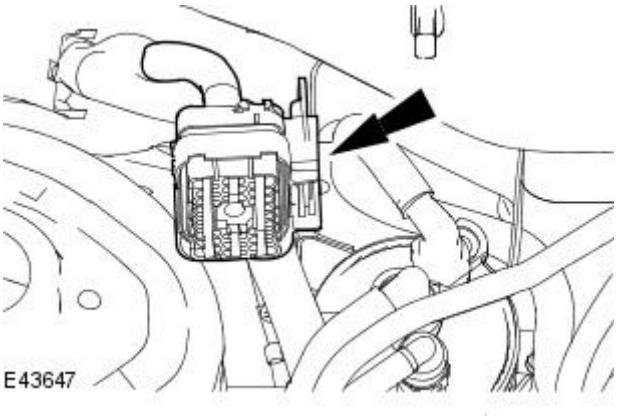

26. Attach the engine wiring harness electrical connector.

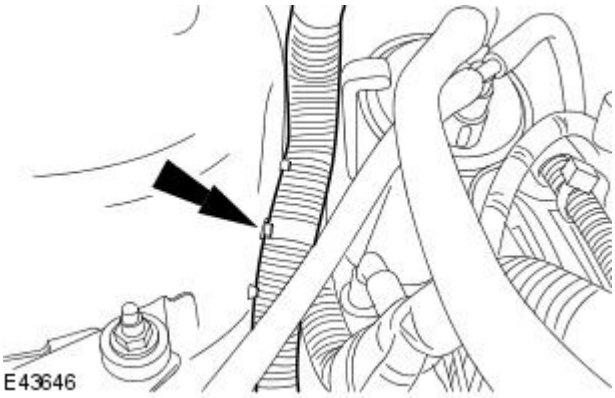

27. Attach the engine wiring harness retaining clip.

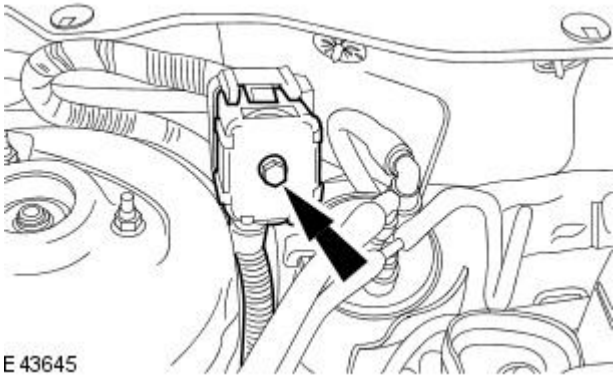

28. Connect the engine wiring harness electrical connector.

- Tighten to 10 Nm.

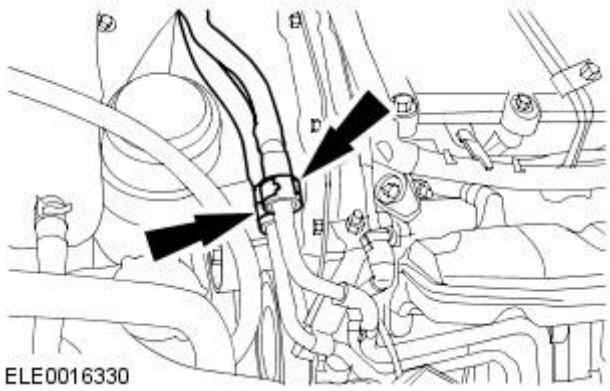

29. NOTE: Remove the blanking plugs from the fuel pump fuel supply and return line male and female connectors.

Connect the fuel pump fuel supply and return lines.
For additional information, refer to: Quick Release Coupling - Push Connect (310-00 Fuel System - General Information, General Procedures).

All vehicles

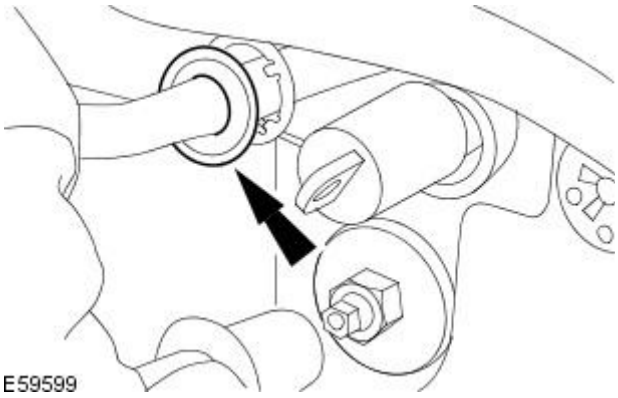

30. NOTE: Remove the blanking plugs.

Connect the A/C refrigerant line.

- Install new O-ring seals.

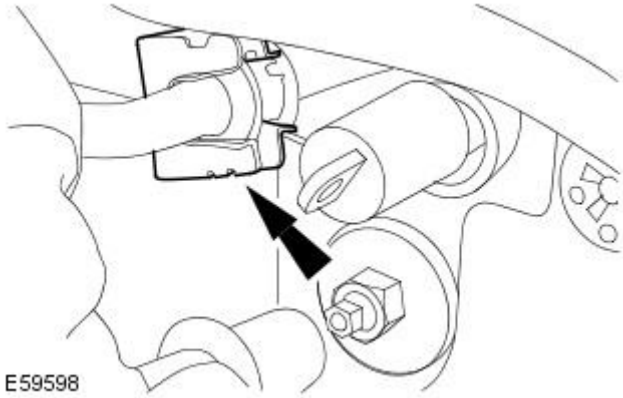

31. Install the A/C refrigerant line retaining clip.

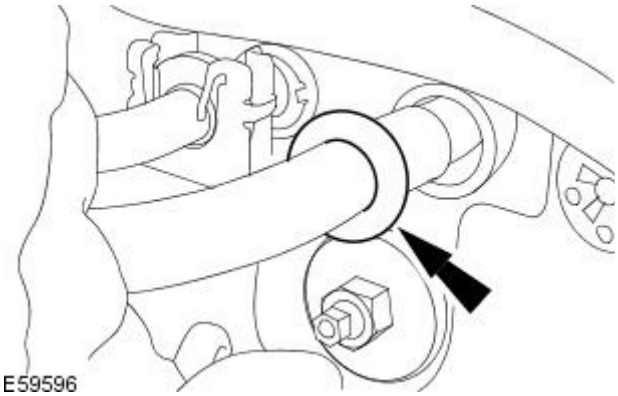

32. NOTE: Remove the blanking plugs.

Connect the A/C refrigerant line.

- Install new O-ring seals.

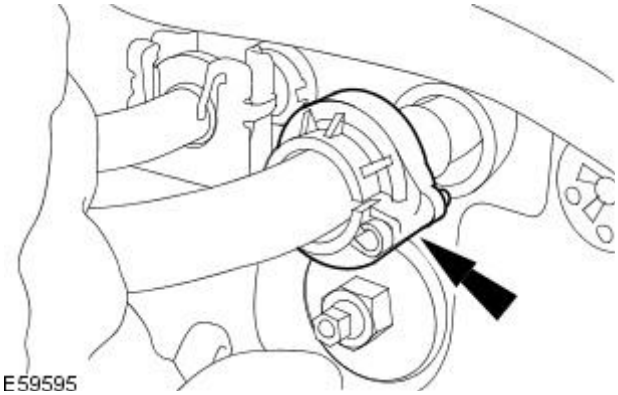

33. Install the refrigerant line retaining clip.

Vehicles with 2.0L engine

34. Install the intake manifold.
For additional information, refer to: Intake Manifold (303-01A Engine - 2.0L NA V6 - AJV6/2.5L NA V6 - AJV6/3.0L NA V6 - AJ27, In-vehicle Repair).

All except vehicles with diesel engine

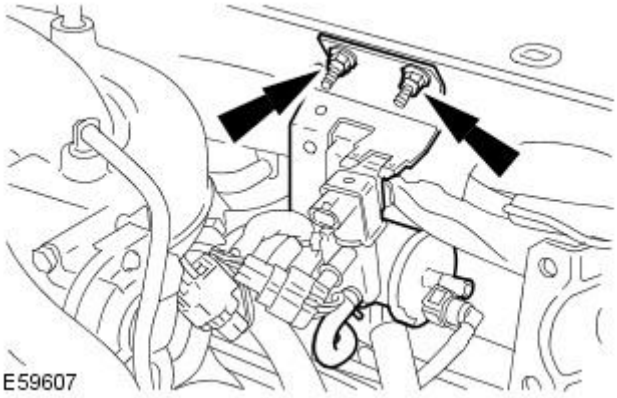

35. Install the evaporative emission canister purge valve retaining bracket.

- Install the retaining nuts.
- Tighten to 5 Nm.

36. Attach the wiring harness to the retaining bracket.

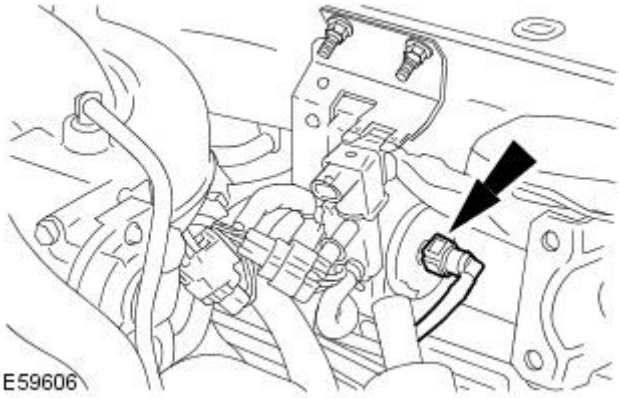

37. Connect the lower fuel vapor hose to the evaporative emission canister purge valve.

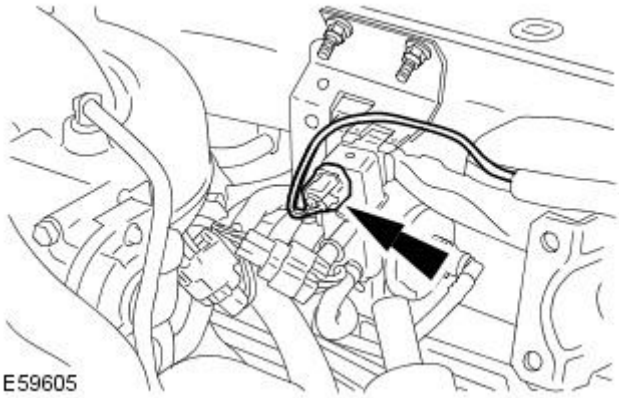

38. Connect the evaporator solenoid electrical connector.

39. Attach the oxygen sensor electrical connectors.

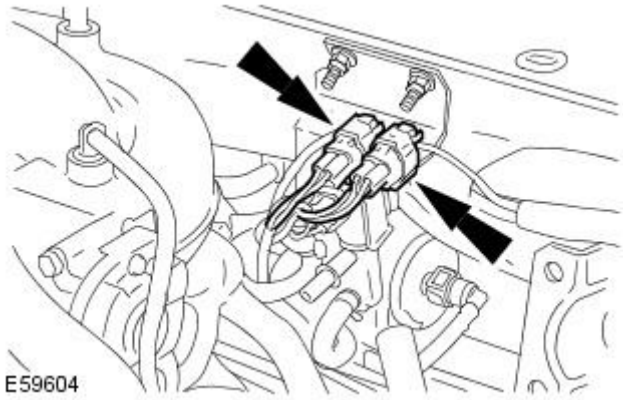

40. Connect the upper fuel vapor hose to the evaporative emission canister purge valve.

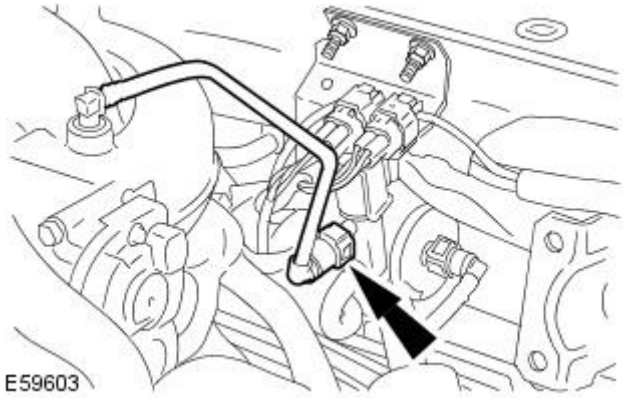

All vehicles

41. Install the brake booster.
For additional information, refer to: Brake Booster - RHD AWD/RHD FWD (206-07 Power Brake Actuation, Removal and Installation).

Vehicles with diesel particulate filter

42. NOTE: Note the orientation of the DPF differential pressure high-pressure and low-pressure hoses and make sure they are installed in the same position.

Connect the DPF differential pressure sensor high-pressure and low-pressure hoses.

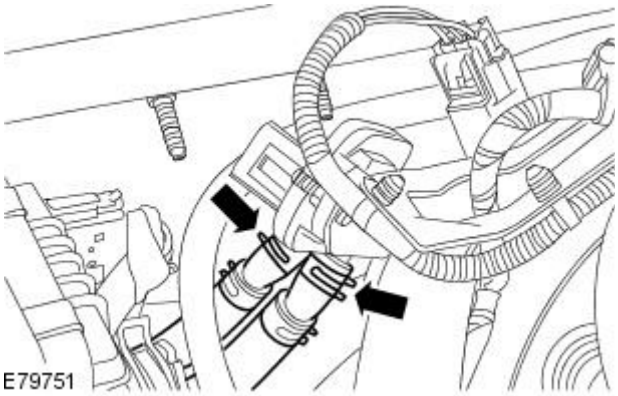

43. Connect the DPF differential pressure sensor electrical connector.

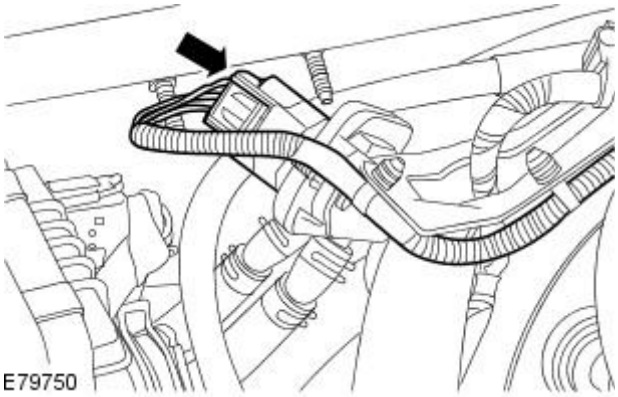

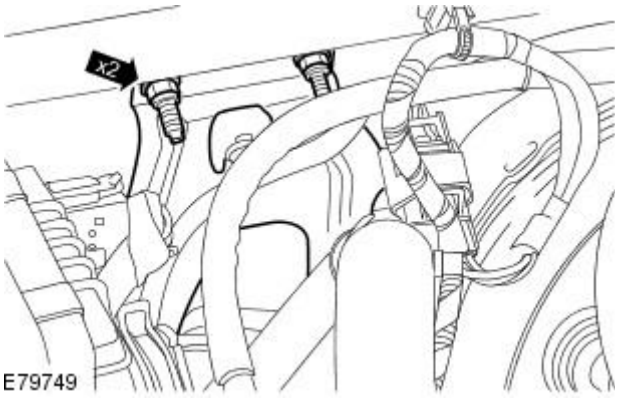

44. Attach the DPF differential pressure sensor retaining bracket.

- Install the retaining nuts.
- Tighten to 5 Nm.

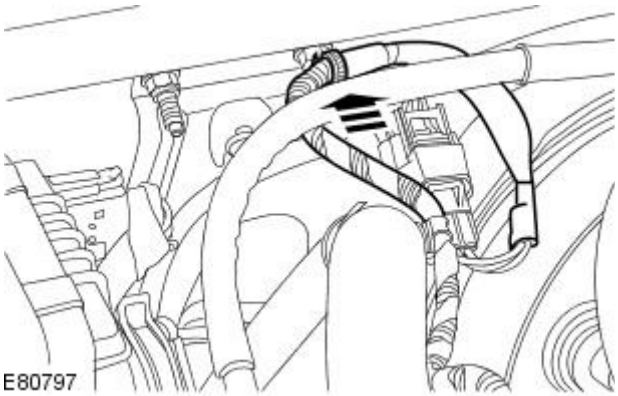

45. Attach the wiring harness.

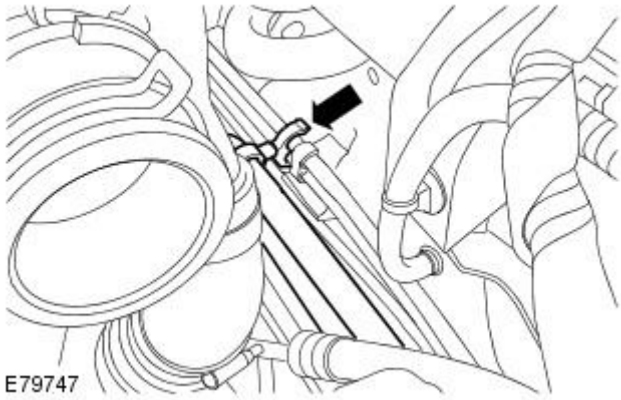

46. CAUTION: Install the retaining clip to the original position. Failure to follow this instruction may result in damage to the vehicle.

Attach the the DPF high-pressure and low-pressure hoses.

47. Install the air cleaner outlet pipe.
For additional information, refer to: Air Cleaner Outlet Pipe (303-12B Intake Air Distribution and Filtering - 2.0L Duratorq-TDCi/2.2L Duratorq-TDCi (110kW/150PS) - Puma, Removal and Installation).

All vehicles

48. Recharge the A/C refrigerant.
For additional information, refer to: Air Conditioning (A/C) System Recovery, Evacuation and Charging (412-00 Climate Control System - General Information, General Procedures).

49. Connect the battery ground cable.
For additional information, refer to: Battery Connect (414-01 Battery, Mounting and Cables, General Procedures).

Published: 11-May-2011

Power Brake Actuation -

Torque Specifications

Description	Nm	lb-ft	lb-in
Brake booster retaining nuts	25	18	-
Brake master cylinder retaining nuts	25	18	-
Coolant expansion tank retaining bolt	3	-	27
Speed control module retaining bolt - Vehicles with 2.0L engine	4	-	35
Vacuum pump retaining nuts - Vehicles with 2.0L engine	10	-	89
Vacuum pump retaining bolts - Vehicles with diesel engine	23	17	-

Power Brake Actuation - Brake Booster

Description and Operation

WARNING: Brake fluid contains polyglycol ethers and polyglycols. Avoid contact with eyes. Wash hands after handling. If brake fluid contacts the eyes, flush the eyes for 15 minutes with cold running water. Get medical attention if irritation persists. If taken internally, drink water and induce vomiting. Get medical attention immediately. Failure to follow these instructions may result in personal injury.

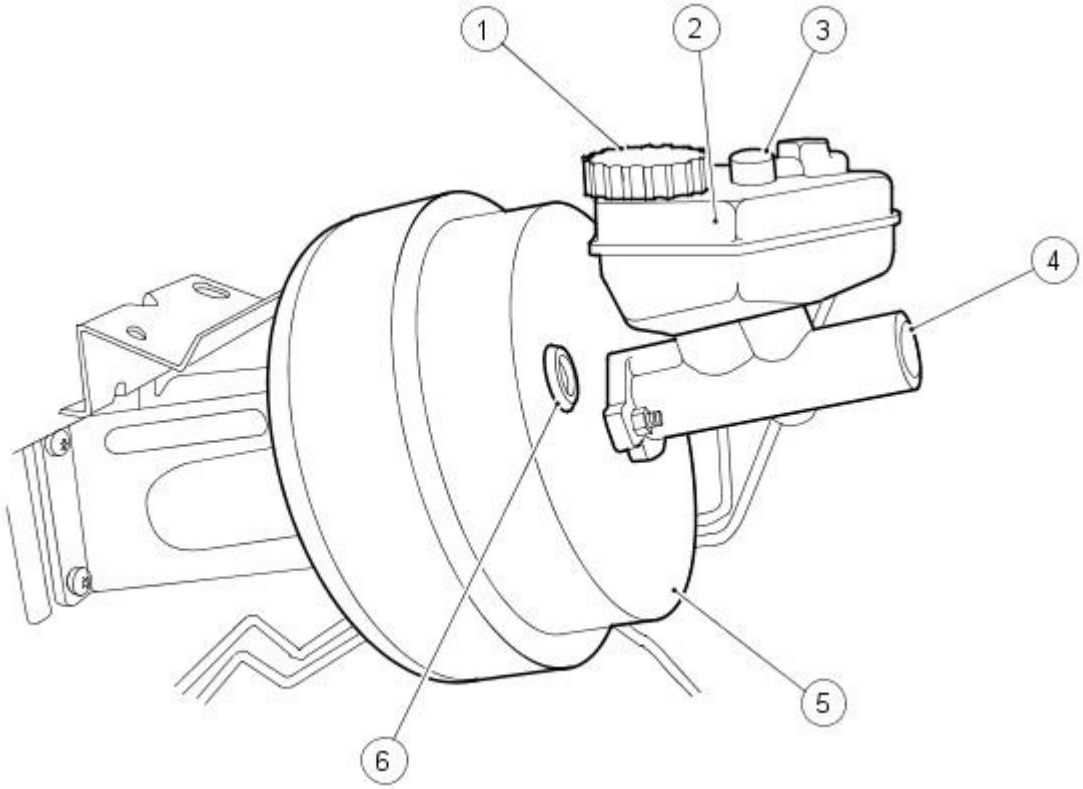

VUJ0003042

Item	Part Number	Description
1	—	Brake fluid reservoir filler cap
2	—	Brake fluid reservoir
3	—	Brake fluid low level warning indicator
4	—	Brake master cylinder
5	—	Brake booster
6	—	Brake booster vacuum hose grommet

The diaphragm type power brake booster:

- is self contained.
- is mounted on the engine side of the bulkhead.
- uses engine intake manifold vacuum, vacuum pump and atmospheric pressure for its assistance.
- is connected to a manifold vacuum hose with a built in non return valve.

Published: 11-May-2011

Power Brake Actuation - Power Brake System

Diagnosis and Testing

For additional information, refer to Section 206-00 Brake System - General Information.

Power Brake Actuation - Brake BoosterLHD AWD / LHD FWD

Removal and Installation

Removal

All vehicles

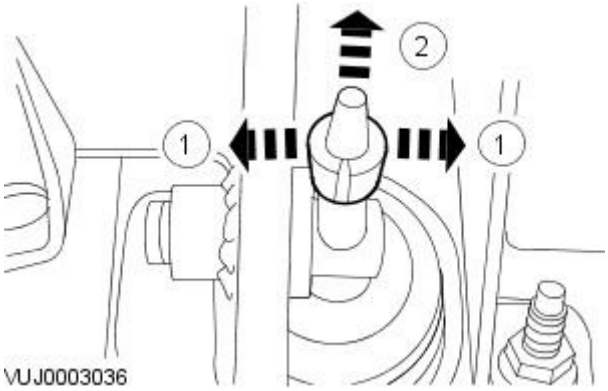

1. Remove the brake booster push rod retaining clip.

1. Release the brake booster push rod retaining clip.
2. Remove the brake booster push rod retaining clip.

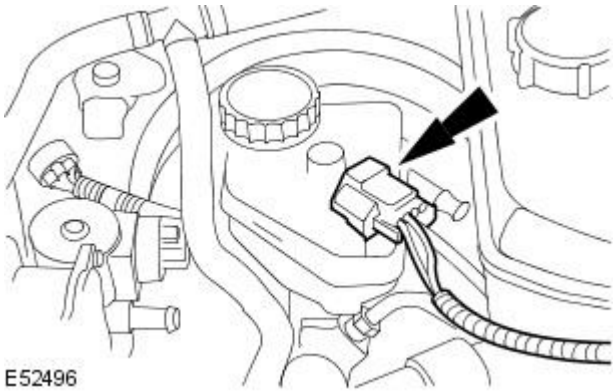

2. Disconnect the brake fluid low level warning indicator electrical connector.

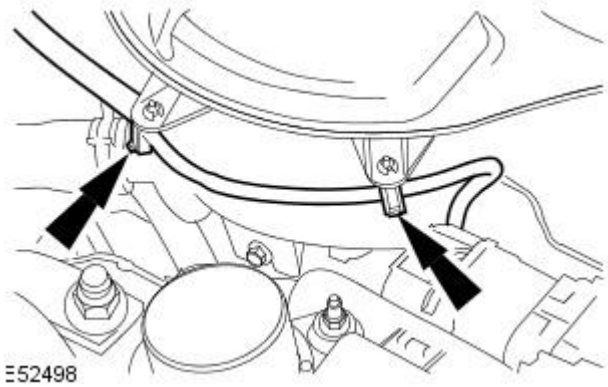

3. Detach the brake fluid low level warning indicator wiring harness from the coolant expansion tank.

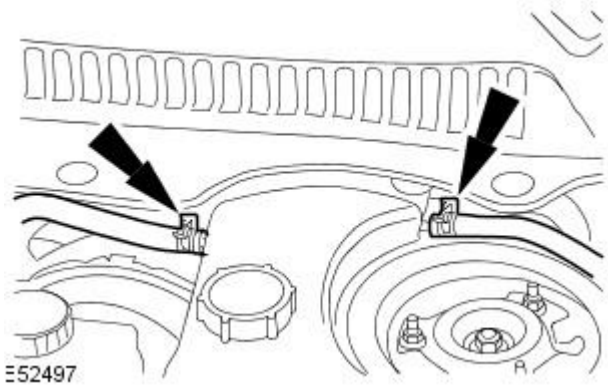

4. NOTE: Install blanking plugs to the cooling system vent hoses and the coolant expansion tank.

Detach the cooling system vent hoses from the coolant expansion tank.

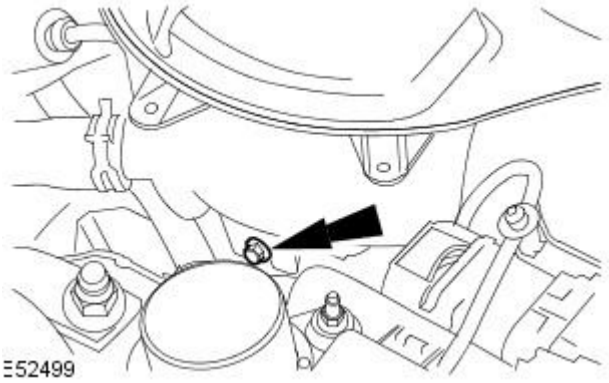

5. Remove the coolant expansion tank retaining bolt.

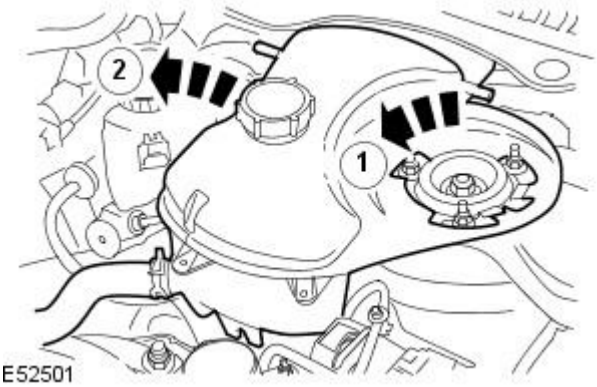

6. Reposition the coolant expansion tank.

1. Detach the coolant expansion tank.
2. Reposition the coolant expansion tank.

Vehicles with 2.0L engine

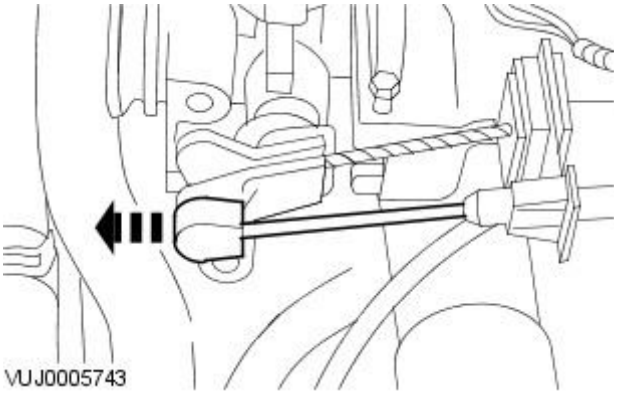

7. Detach the cruise control cable.

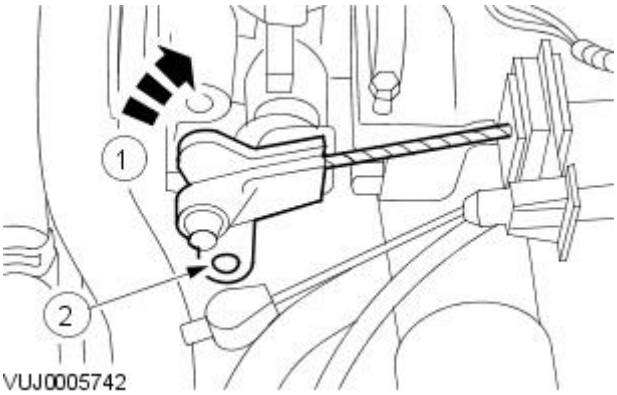

8. Detach the throttle cable.

1. Reposition the throttle lever to the fully open position.
2. Detach the throttle cable.

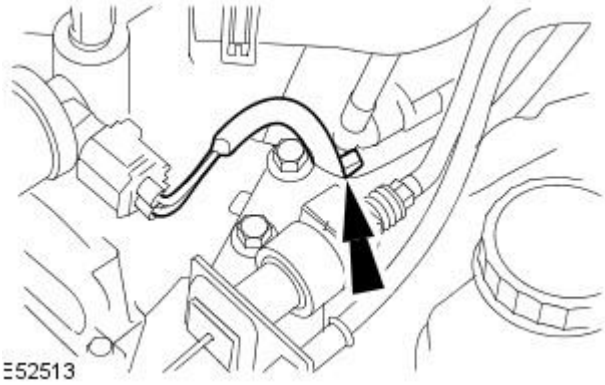

9. Detach the idle air control (IAC) valve wiring harness.

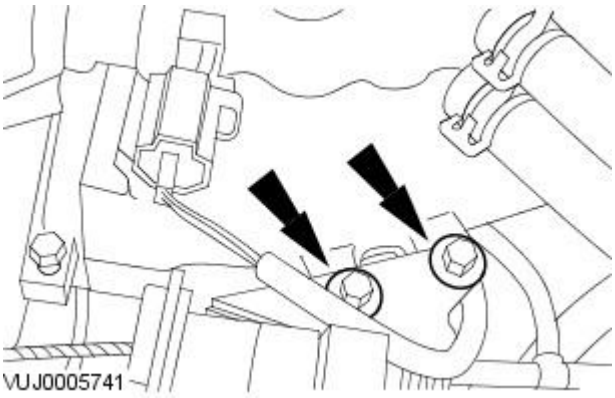

10. Detach the throttle cable retaining bracket.

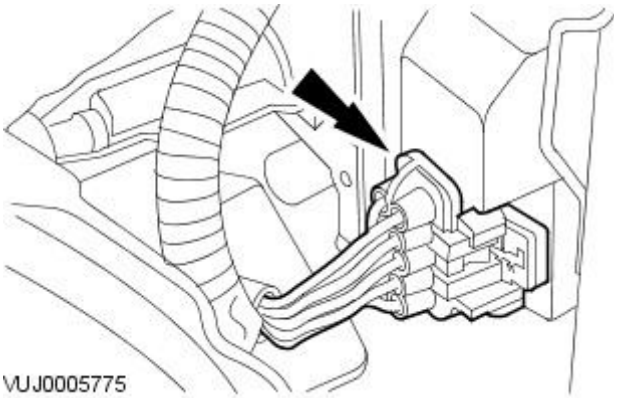

11. Disconnect the speed control module electrical connector.

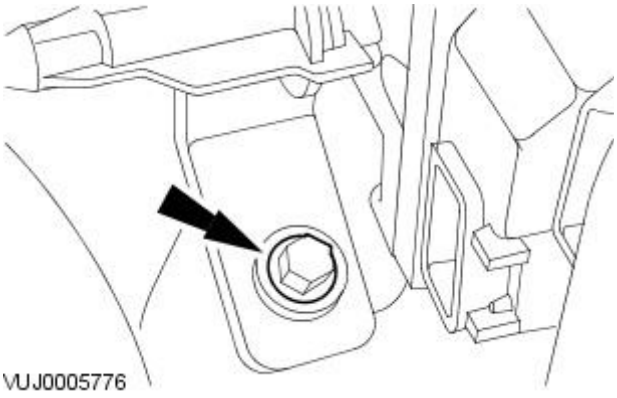

12. Remove the speed control module retaining bolt.

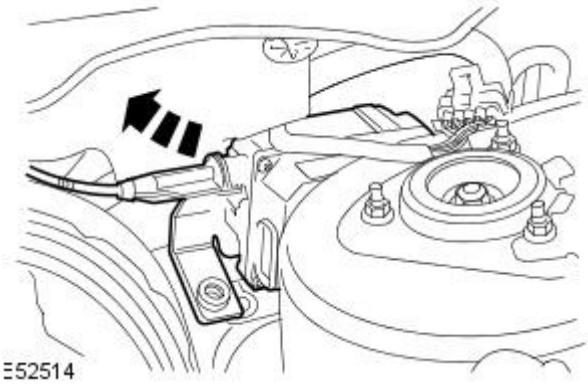

13. Reposition the speed control module.

Vehicles with manual transmission

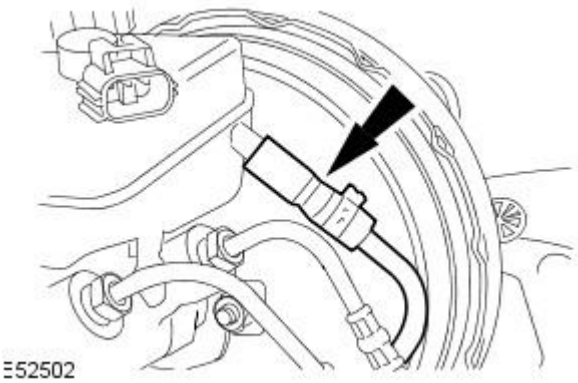

14. CAUTION: If brake fluid is split on the paintwork, the affected area must be immediately washed down with cold water. Failure to follow this instruction may result in damage to the vehicle.

• NOTE: Install blanking plugs to the clutch master cylinder feed hose and the brake fluid reservoir.

Detach the clutch master cylinder feed hose.

All vehicles

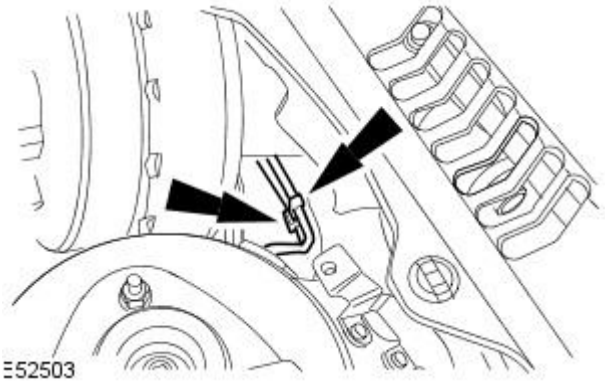

15. Detach the brake fluid supply tubes from the retaining clip.

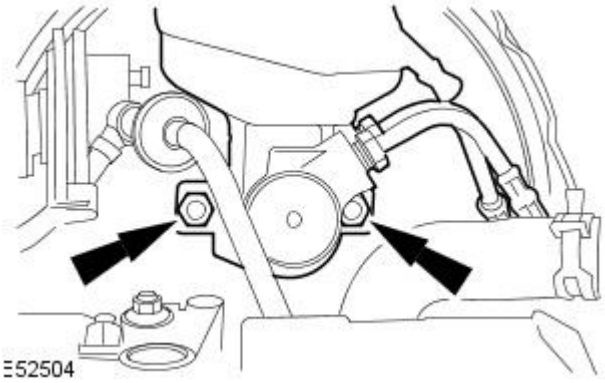

16. Detach the brake master cylinder assembly from the brake booster.

- Remove and discard the O-ring seal at the rear of the brake master cylinder.

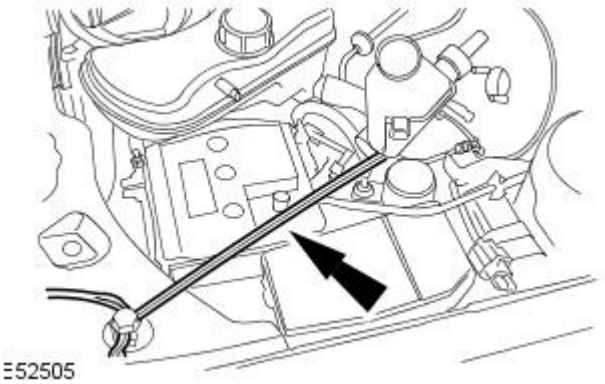

17. Using a suitable cord, reposition the brake master cylinder assembly.

18. Detach the brake booster vacuum hose.

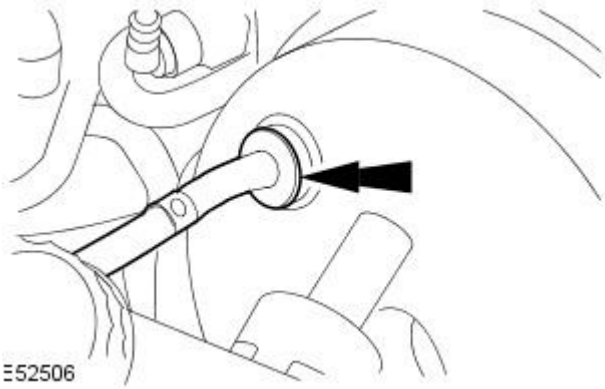

19. Detach the brake booster.

- Remove the brake booster retaining nuts.

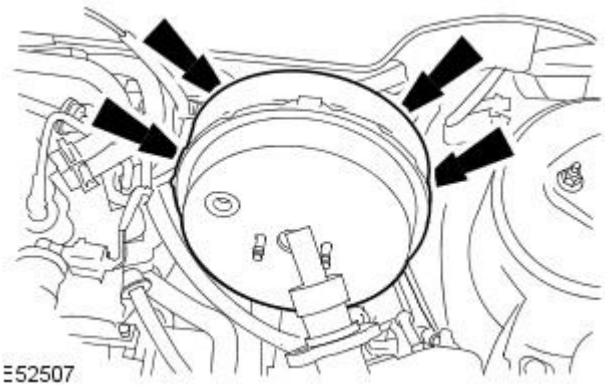

20. Remove the brake booster support bracket.

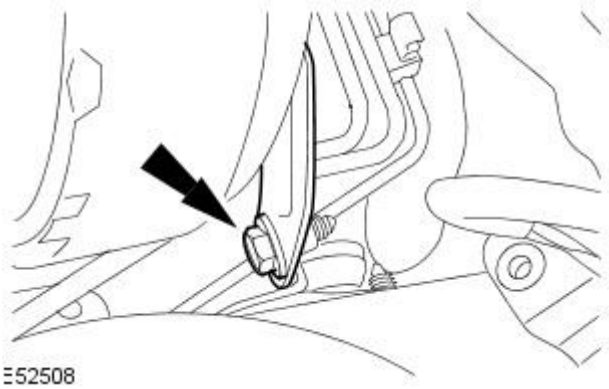

21. Remove the brake booster.

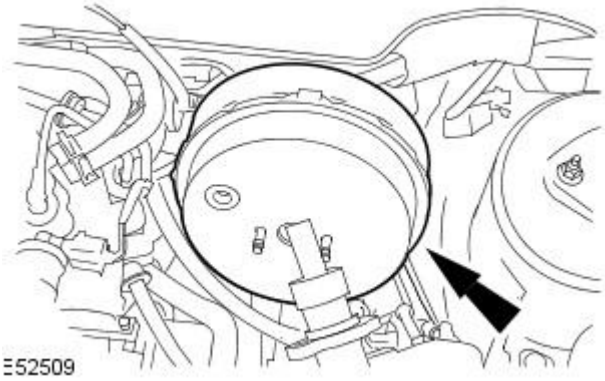

Installation

All vehicles

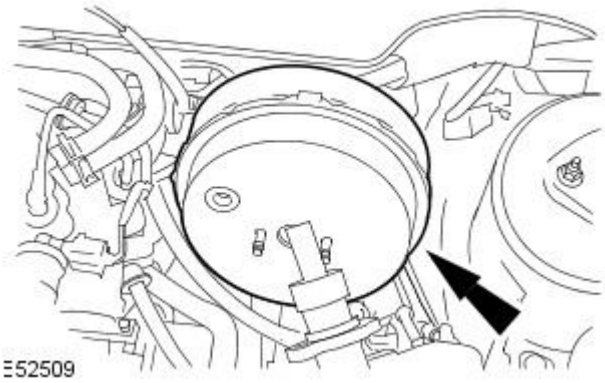

1. NOTE: Make sure the brake booster push rod is correctly aligned to the brake pedal.

• NOTE: Do not install the brake booster retaining nuts at this stage.

Install the brake booster.

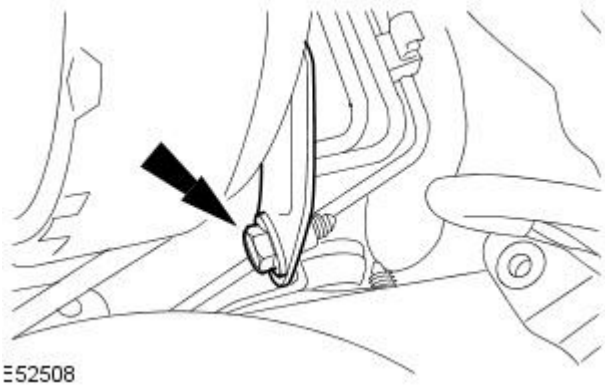

2. Install the brake booster support bracket.

- Loosely install the brake booster support bracket retaining bolt.

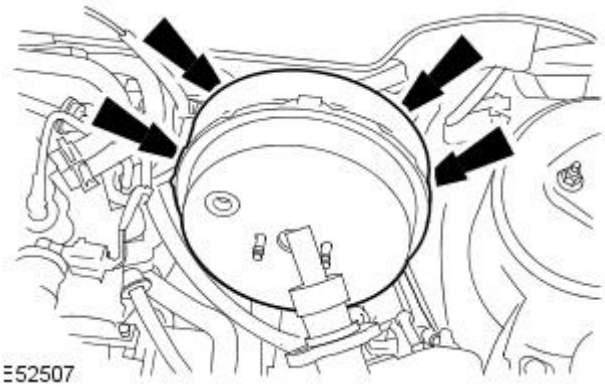

3. Attach the brake booster.

- Tighten to 25 Nm.

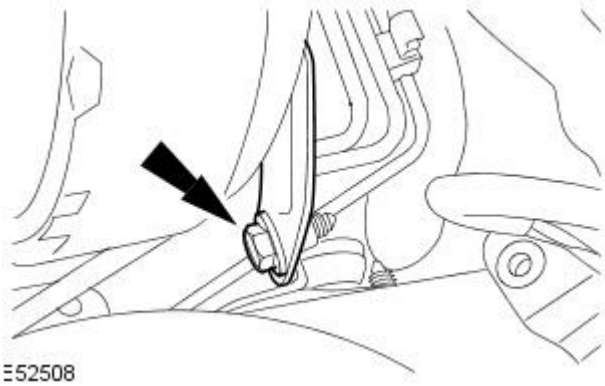

4. Tighten the brake booster support bracket retaining bolt.

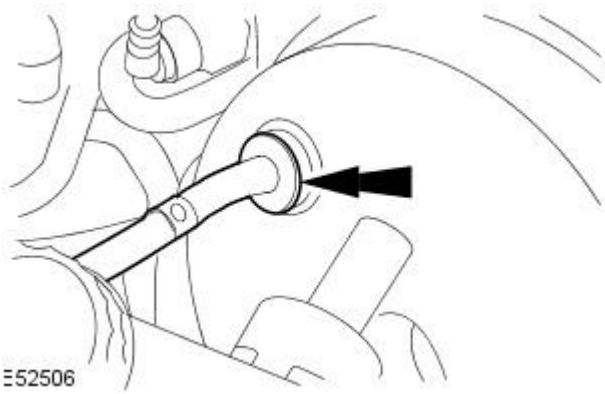

5. Attach the brake booster vacuum hose.

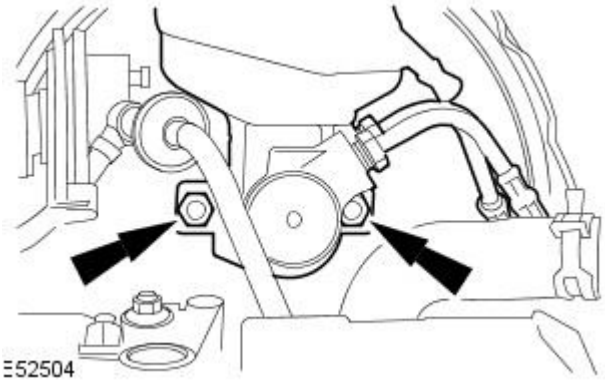

6. NOTE: Install a new brake master cylinder to brake booster O-ring seal.

• NOTE: Make sure the brake booster push rod is correctly aligned to the brake master cylinder assembly.

Attach the brake master cylinder assembly to the brake booster.

- Tighten to 25 Nm.

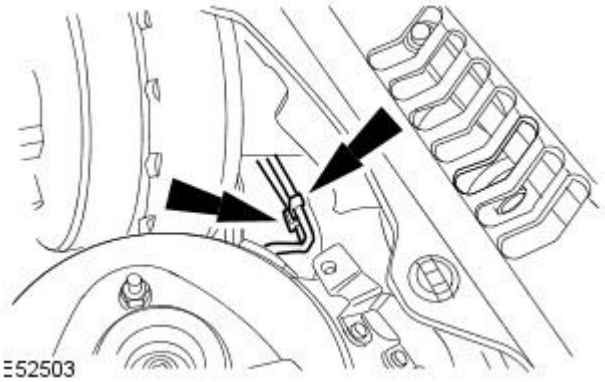

7. Attach the brake fluid supply tubes to the retaining clip.

Vehicles with manual transmission

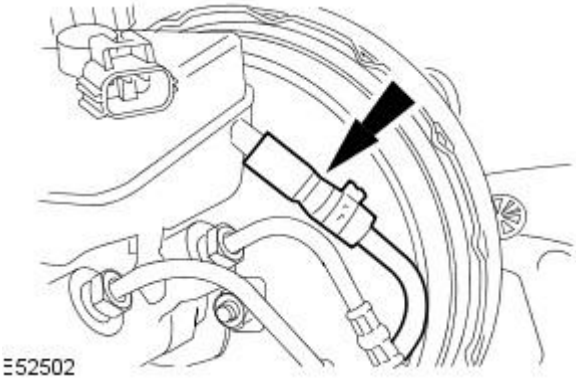

8. CAUTION: If brake fluid is split on the paintwork, the affected area must be immediately washed down with cold water. Failure to follow this instruction may result in damage to the vehicle.

• NOTE: Remove the blanking plugs from the clutch master cylinder feed hose and the brake fluid reservoir.

Attach the clutch master cylinder feed hose.

Vehicles with 2.0L engine

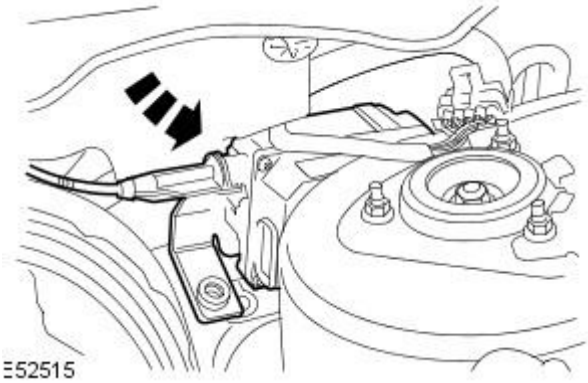

9. Reposition the speed control module.

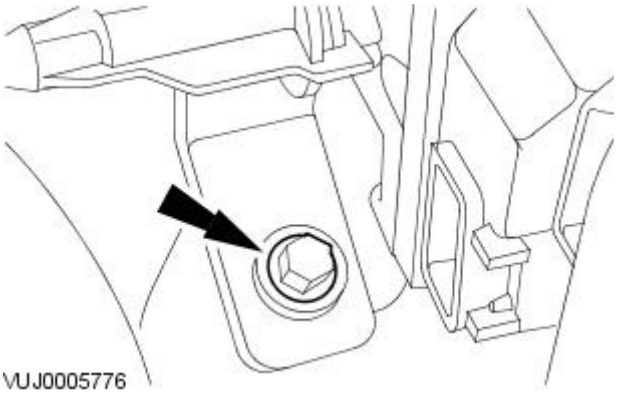

10. Install the speed control module retaining bolt.

- Tighten to 4 Nm.

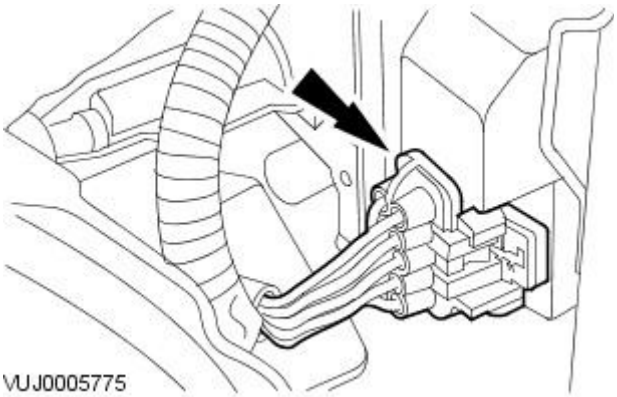

11. Connect the speed control module electrical connector.

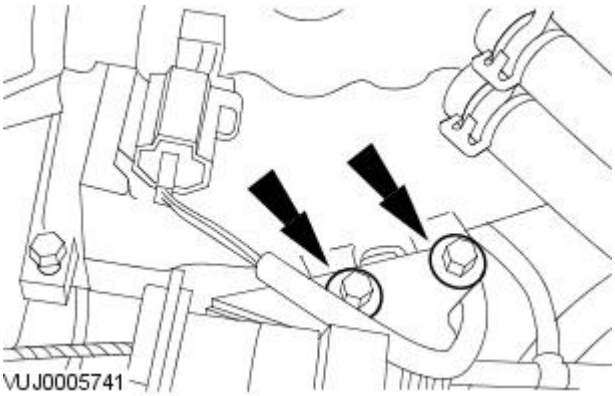

12. Attach the throttle cable retaining bracket.

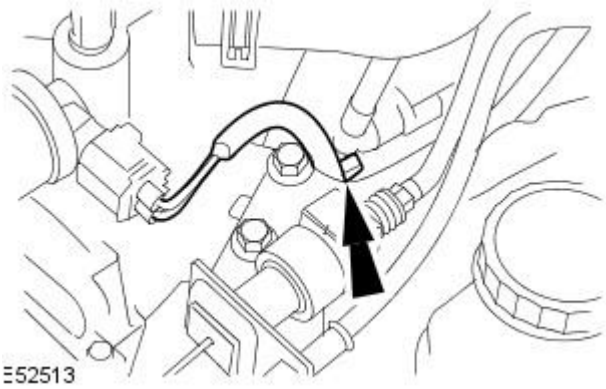

13. Attach the IAC valve wiring harness.

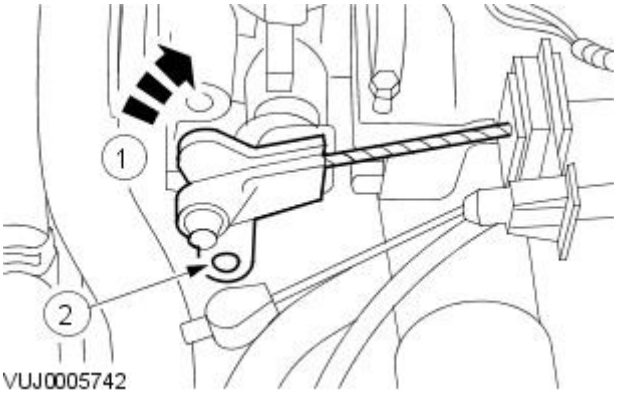

14. Attach the throttle cable.

1. Reposition the throttle lever to the fully open position.
2. Attach the throttle cable.

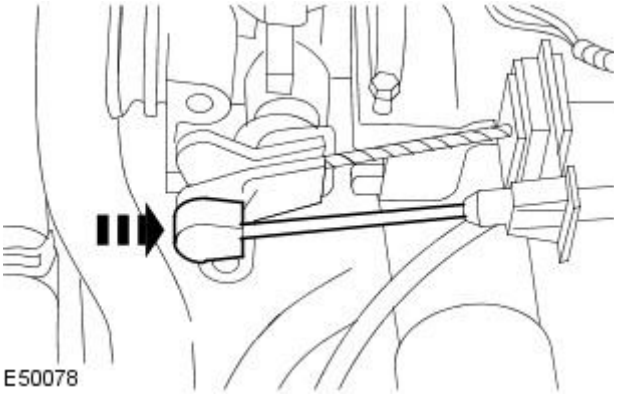

15. Attach the cruise control cable.

All vehicles

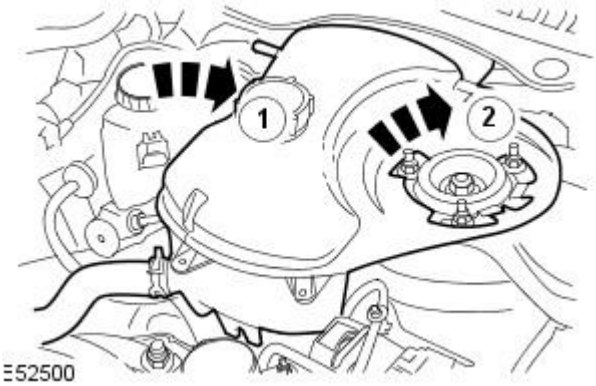

16. Attach the coolant expansion tank.

1. Reposition the coolant expansion tank.
2. Attach the coolant expansion tank.

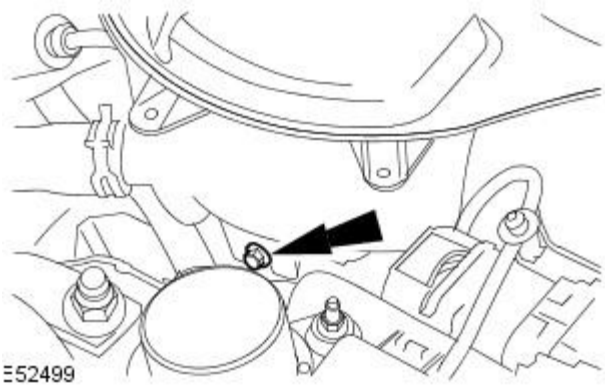

17. Install the coolant expansion tank retaining bolt.

- Tighten to 3 Nm.

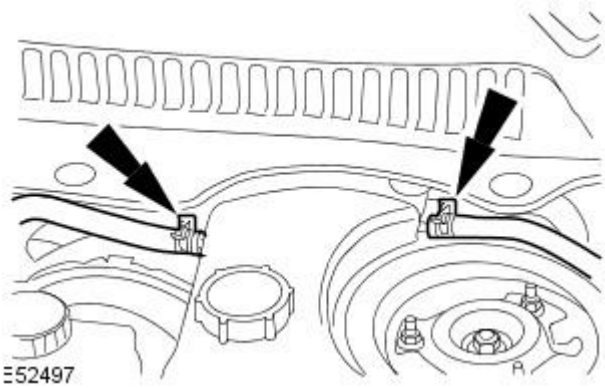

18. NOTE: Remove the blanking plugs from the cooling system vent hoses and the coolant expansion tank.

Attach the cooling system vent hoses to the coolant expansion tank.

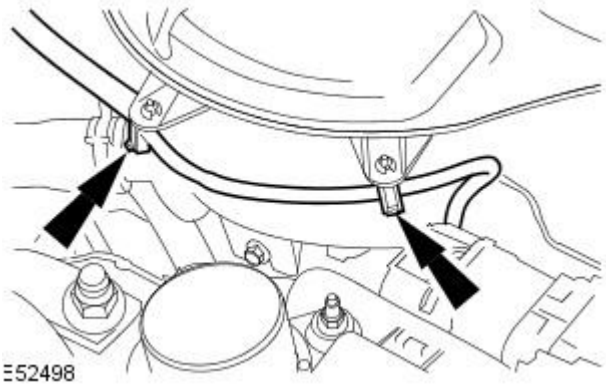

19. Attach the brake fluid low level warning indicator wiring harness to the coolant expansion tank.

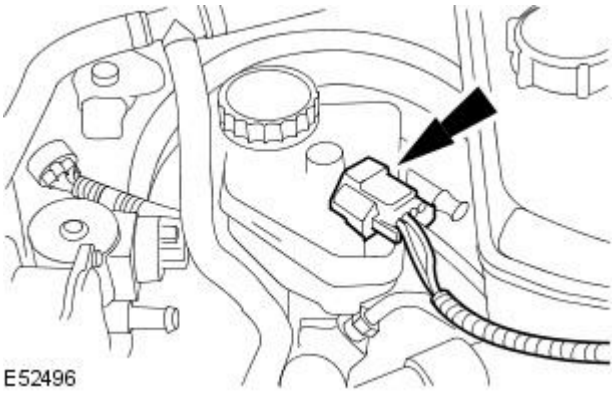

20. Connect the brake fluid low level warning indicator electrical connector.

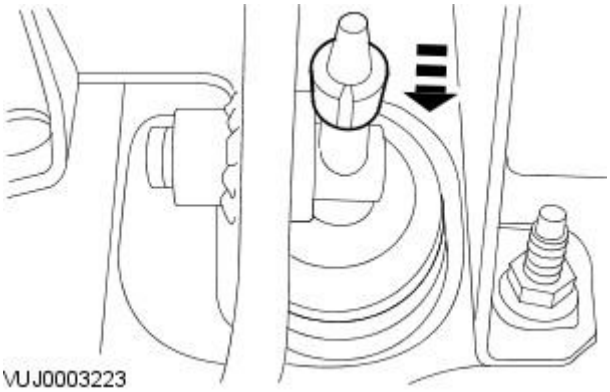

21. Install the brake booster push rod retaining clip.

22. Check and top up the cooling system as required.

Vehicles with manual transmission

23. Bleed the clutch system.
For additional information, refer to: Clutch System Bleeding - Vehicles With: 6-Speed Manual Transaxle - MMT6 (308-00 Manual Transmission/Transaxle and Clutch - General Information, General Procedures).

Power Brake Actuation - Brake BoosterRHD AWD / RHD FWD

Removal and Installation

Special Tool(s)	
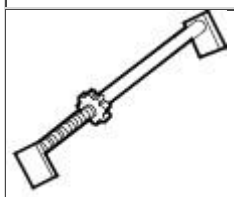 JDS9013	Brake pedal hold down tool JDS 9013

Removal

All vehicles

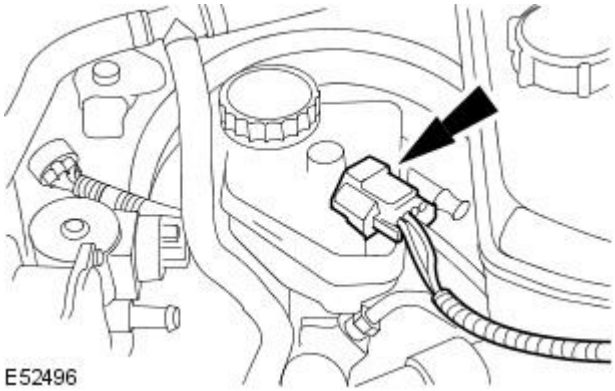

1. Disconnect the brake fluid low level warning indicator electrical connector.

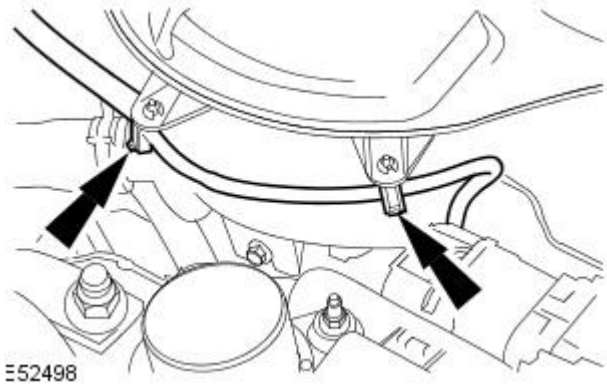

2. Detach the brake fluid low level warning indicator wiring harness from the coolant expansion tank.

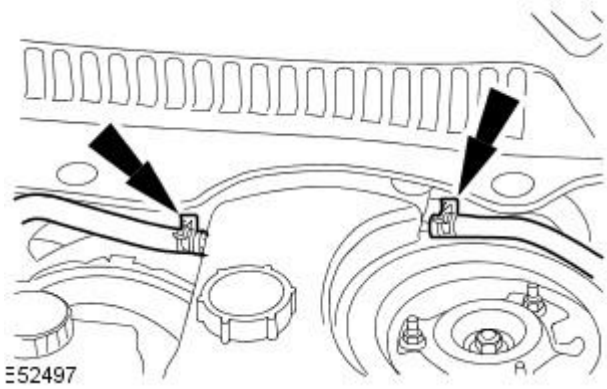

3. NOTE: Install blanking plugs to the cooling system vent hoses and the coolant expansion tank.

Detach the cooling system vent hoses from the coolant expansion tank.

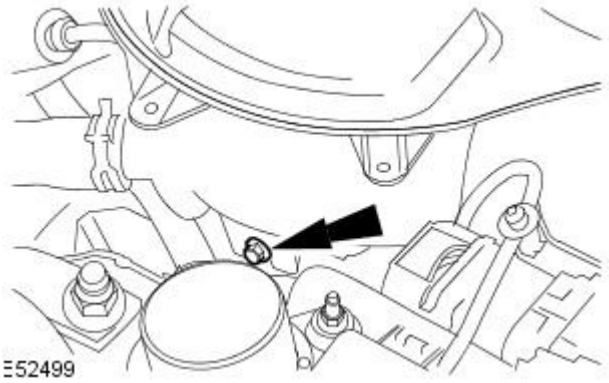

4. Remove the coolant expansion tank retaining bolt.

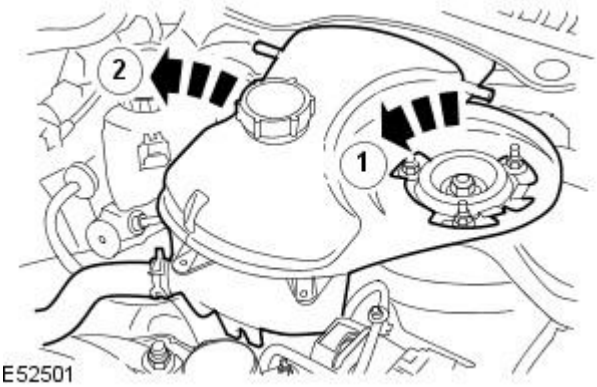

5. Reposition the coolant expansion tank.

1. Detach the coolant expansion tank.
2. Reposition the coolant expansion tank.

Vehicles with 2.0L engine

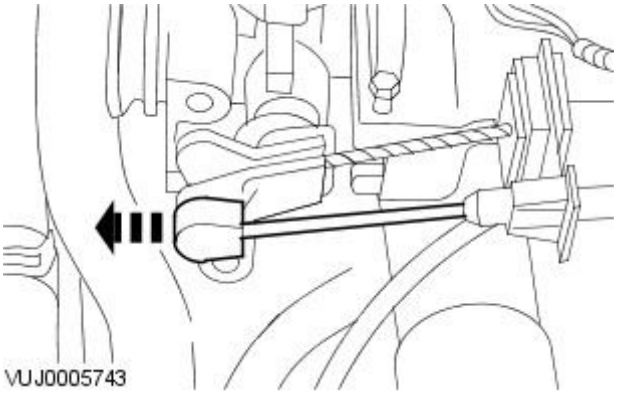

6. Detach the cruise control cable.

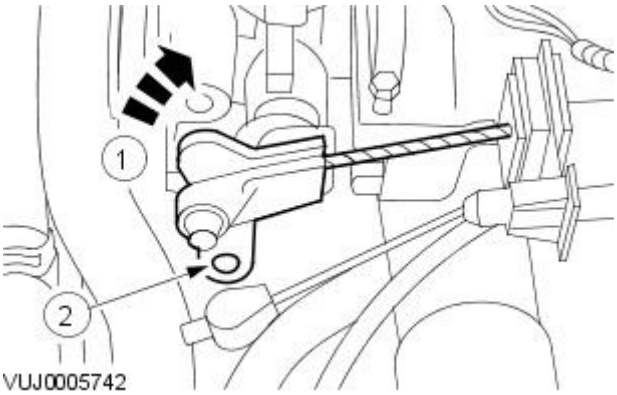

7. Detach the throttle cable.

1. Reposition the throttle lever to the fully open position.
2. Detach the throttle cable.

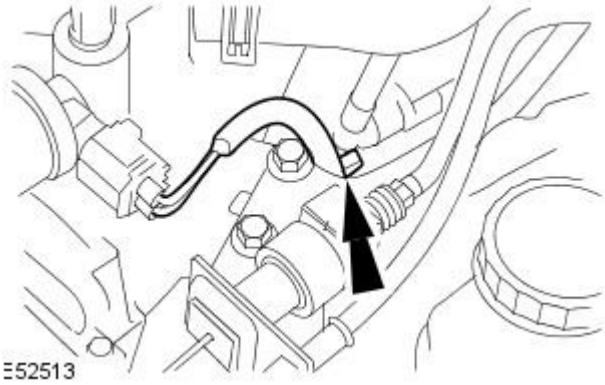

8. Detach the idle air control (IAC) valve wiring harness.

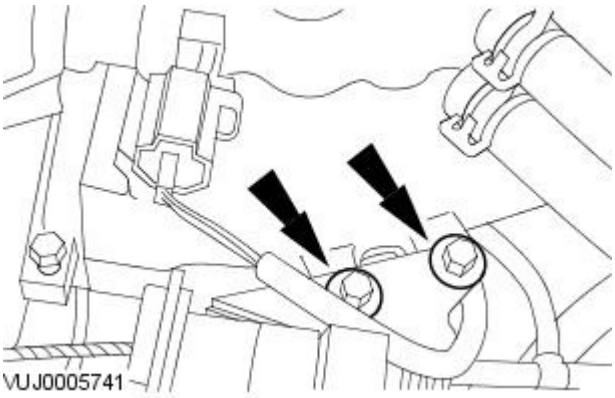

9. Detach the throttle cable retaining bracket.

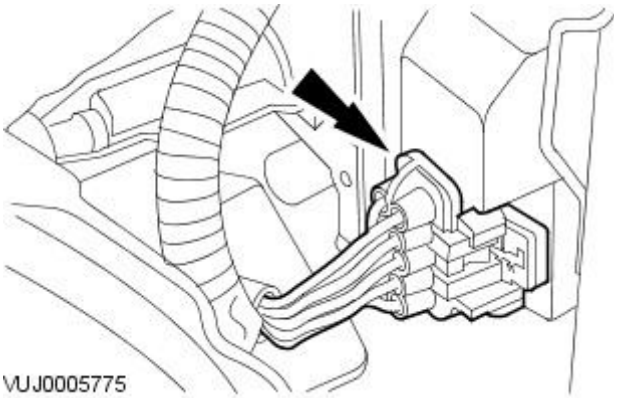

10. Disconnect the speed control module electrical connector.

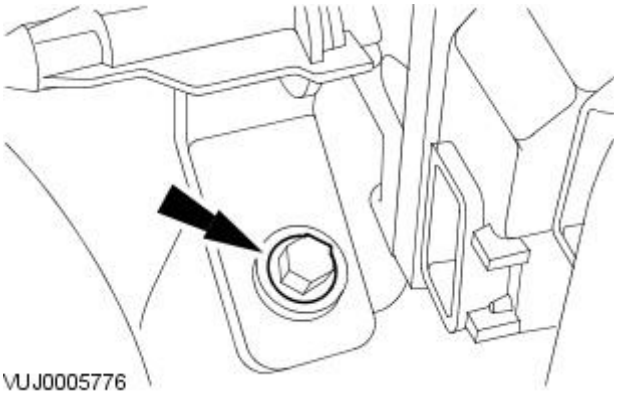

11. Remove the speed control module retaining bolt.

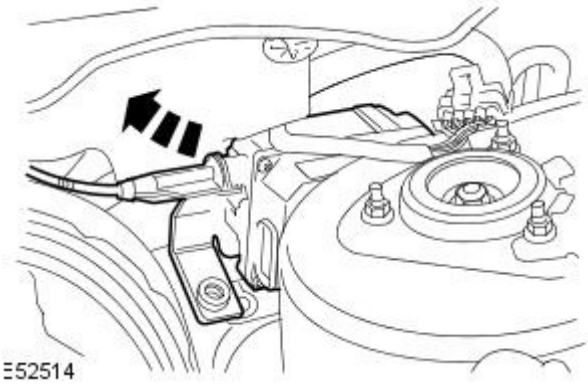

12. Reposition the speed control module.

Vehicles with manual transmission

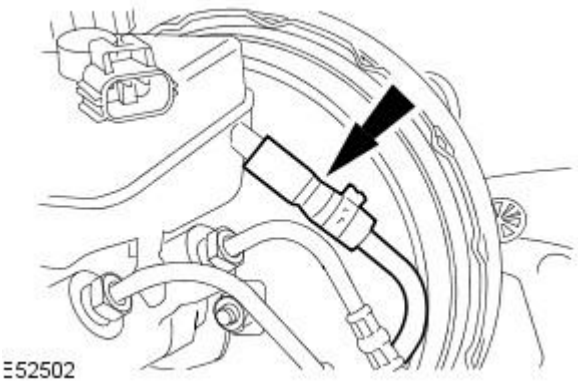

13. CAUTION: If brake fluid is split on the paintwork, the affected area must be immediately washed down with cold water. Failure to follow this instruction may result in damage to the vehicle.

• NOTE: Install blanking plugs to the clutch master cylinder feed hose and the brake fluid reservoir.

Detach the clutch master cylinder feed hose.

All vehicles

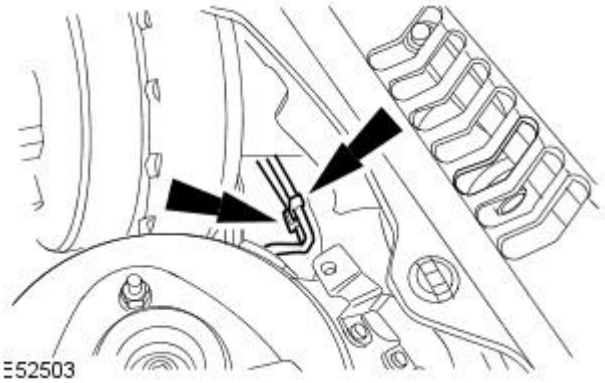

14. Detach the brake fluid supply tubes from the retaining clip.

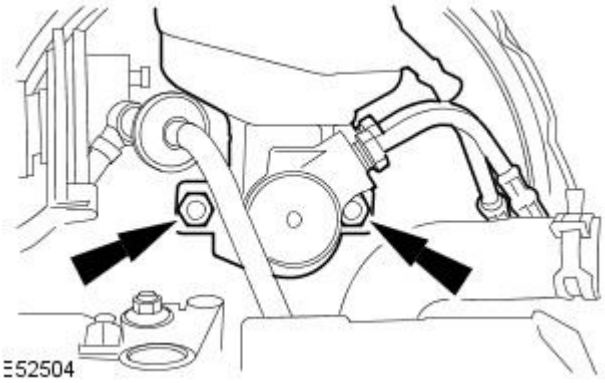

15. Detach the brake master cylinder assembly from the brake booster.

- Remove and discard the O-ring seal at the rear of the brake master cylinder.

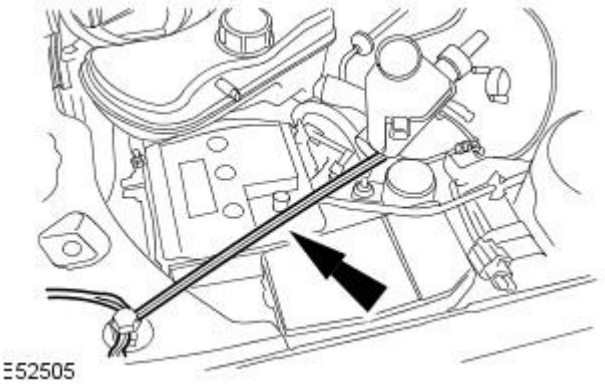

16. Using a suitable cord, reposition the brake master cylinder assembly.

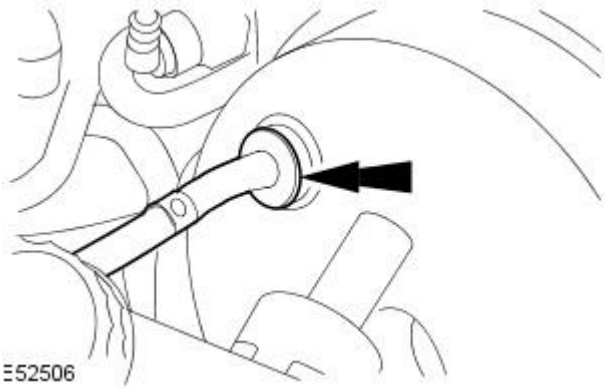

17. Detach the brake booster vacuum hose.

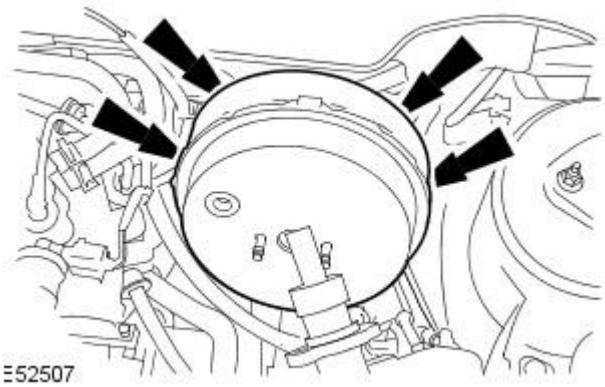

18. Detach the brake booster.

- Remove the brake booster retaining nuts.

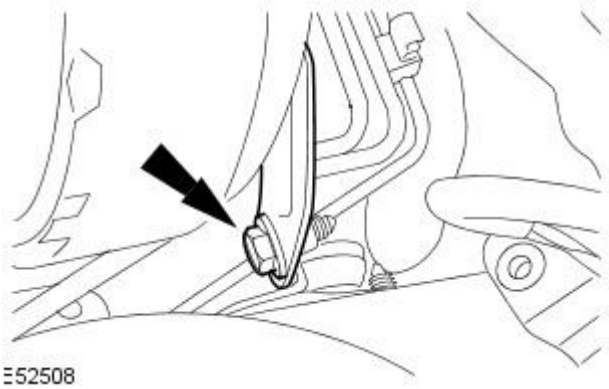

19. Remove the brake booster support bracket.

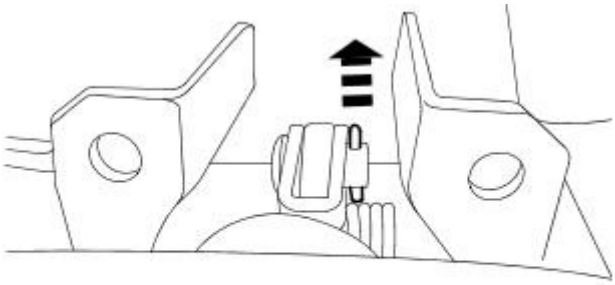

20. Using the brake pedal hold down tool, apply the brake pedal until the brake booster push rod pin can be removed.

21. Remove the brake booster push rod pin retaining clip.

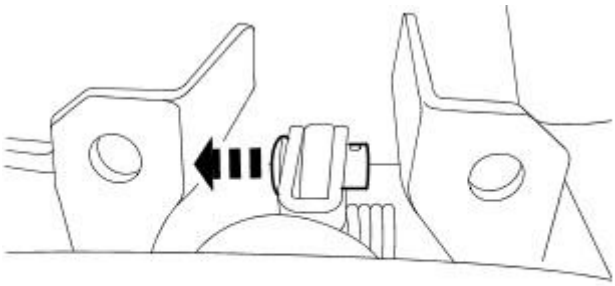

VUJ0003218

22. Remove the brake booster push rod pin.

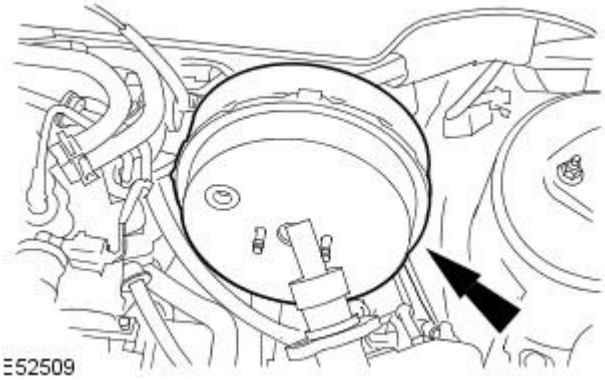

E52509

23. Remove the brake booster.

Installation

All vehicles

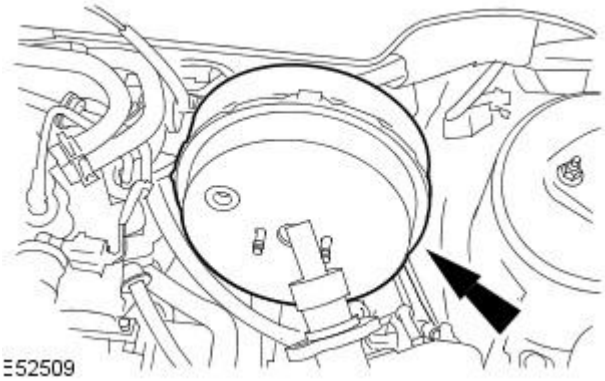

E52509

1. NOTE: Do not install the brake booster retaining nuts at this stage.

Install the brake booster.

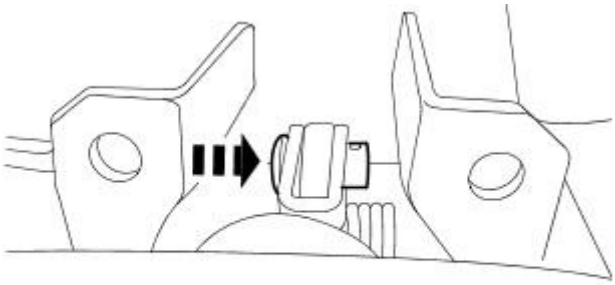

VUJ0003220

2. Install the brake booster push rod pin.

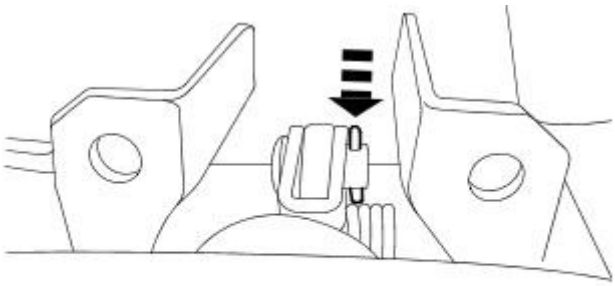

VUJ0003221

3. Install the brake booster push rod pin retaining clip.

4. Remove the brake pedal hold down tool.

5. Install the brake booster support bracket.

- Loosely install the brake booster support bracket retaining bolt.

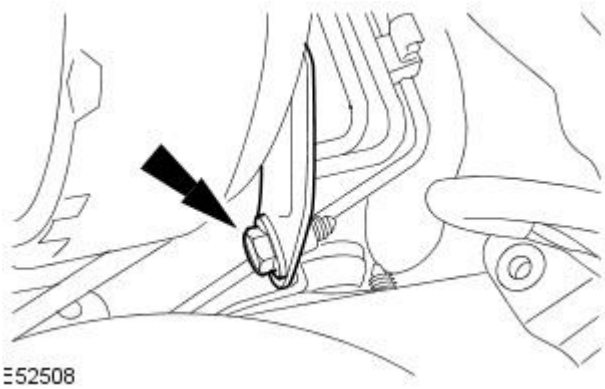

E52508

6. Attach the brake booster.

- Tighten to 25 Nm.

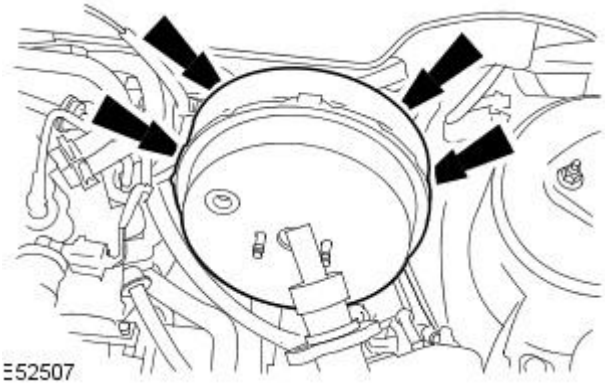

E52507

7. Tighten the brake booster support bracket retaining bolt.

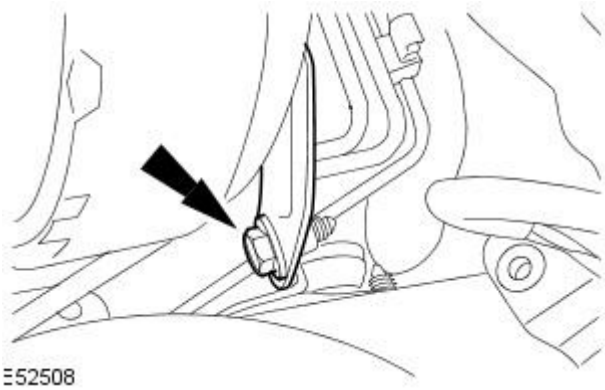

E52508

8. Attach the brake booster vacuum hose.

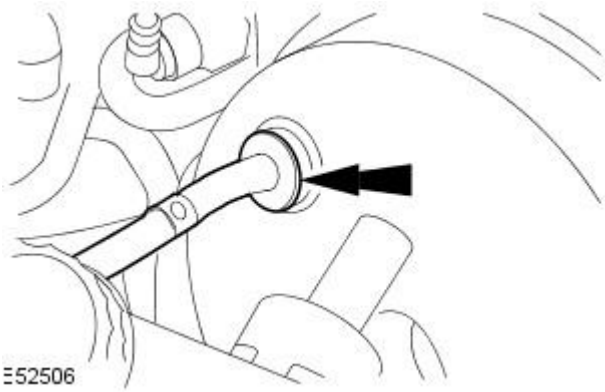

E52506

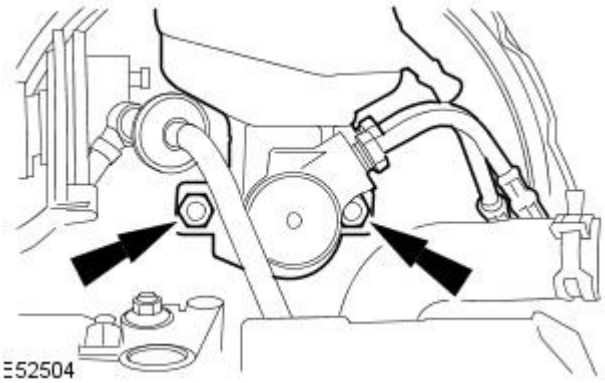

9. NOTE: Install a new brake master cylinder to brake booster O-ring seal.

• NOTE: Make sure the brake booster push rod is correctly aligned to the brake master cylinder assembly.

Attach the brake master cylinder assembly to the brake booster.

- Tighten to 25 Nm.

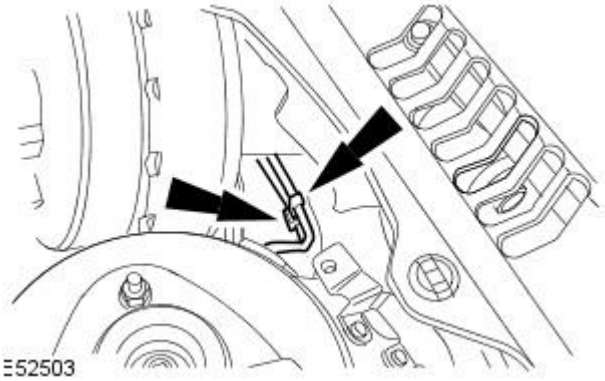

10. Attach the brake fluid supply tubes to the retaining clip.

Vehicles with manual transmission

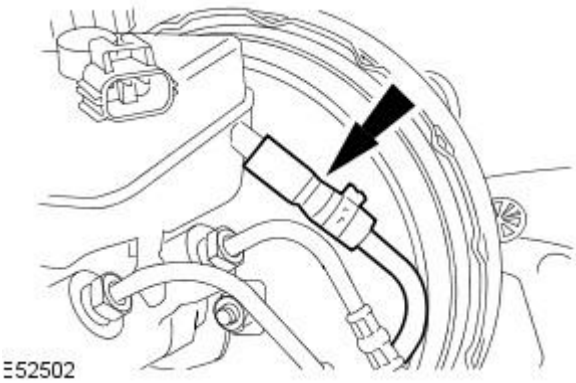

11. CAUTION: If brake fluid is split on the paintwork, the affected area must be immediately washed down with cold water. Failure to follow this instruction may result in damage to the vehicle.

• NOTE: Remove the blanking plugs from the clutch master cylinder feed hose and the brake fluid reservoir.

Attach the clutch master cylinder feed hose.

Vehicles with 2.0L engine

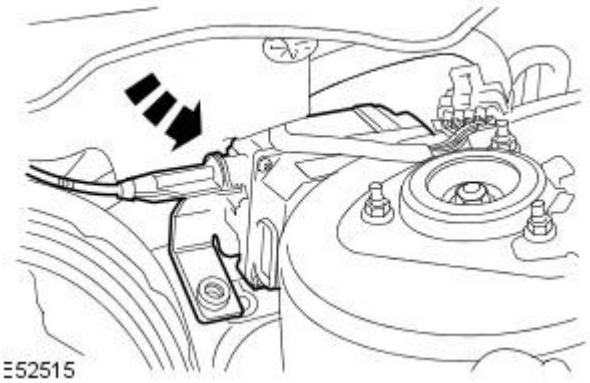

12. Reposition the speed control module.

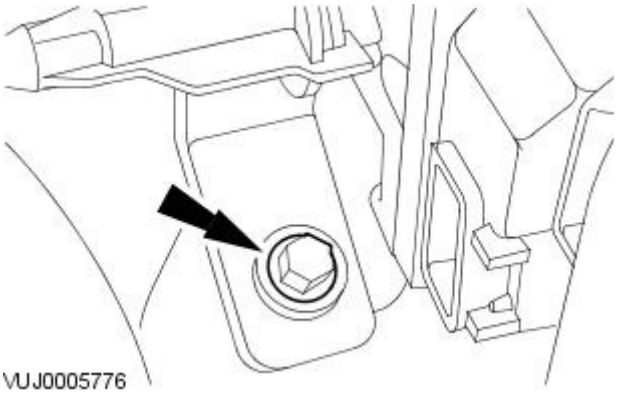

13. Install the speed control module retaining bolt.

- Tighten to 4 Nm.

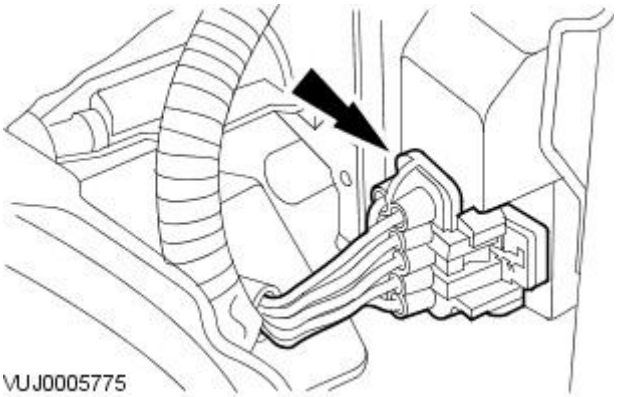

14. Connect the speed control module electrical connector.

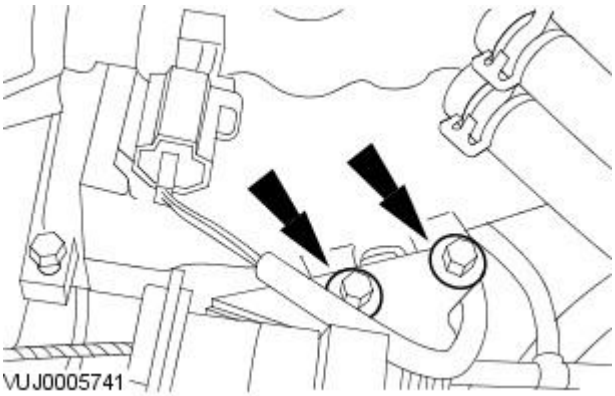

15. Attach the throttle cable retaining bracket.

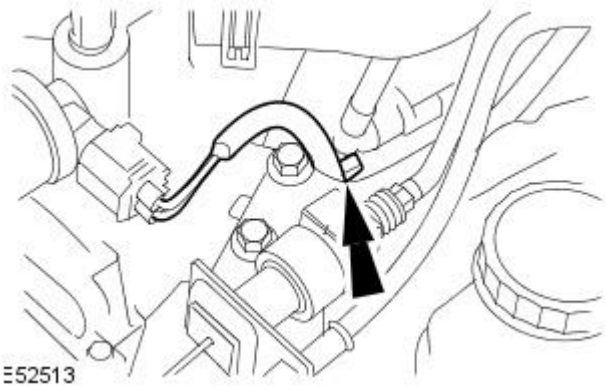

16. Attach the IAC valve wiring harness.

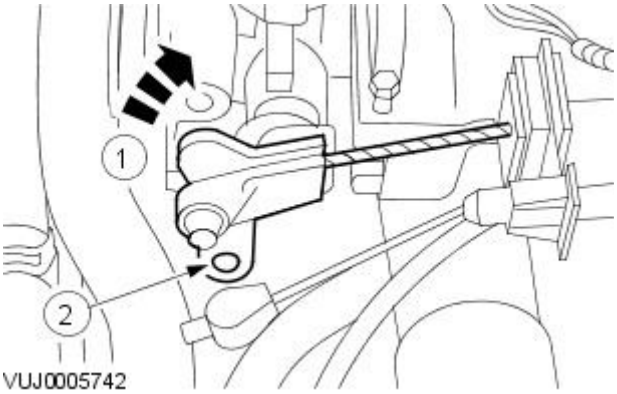

17. Attach the throttle cable.

1. Reposition the throttle lever to the fully open position.
2. Attach the throttle cable.

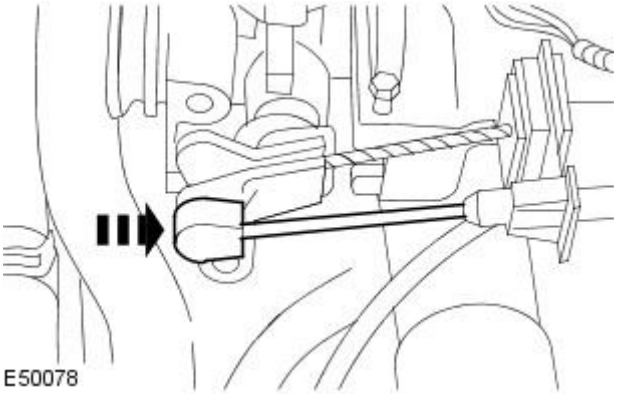

18. Attach the cruise control cable.

All vehicles

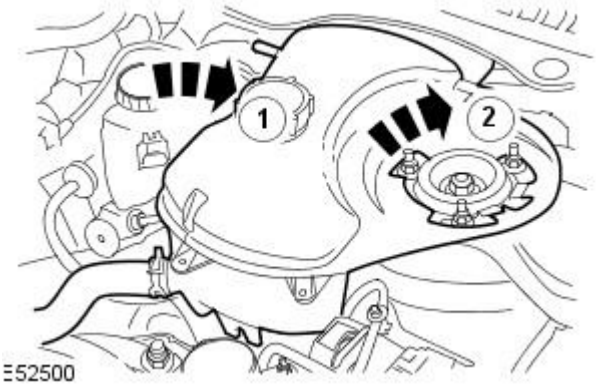

19. Attach the coolant expansion tank.

1. Reposition the coolant expansion tank.
2. Attach the coolant expansion tank.

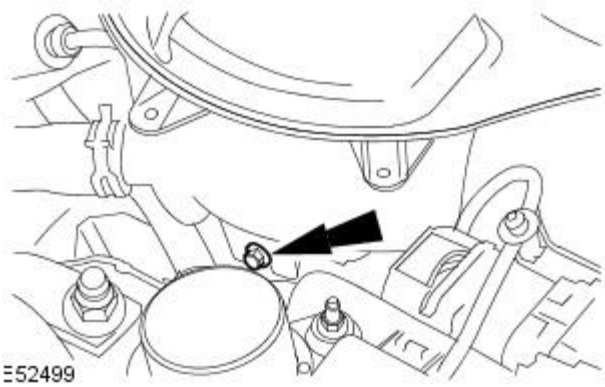

20. Install the coolant expansion tank retaining bolt.

- Tighten to 3 Nm.

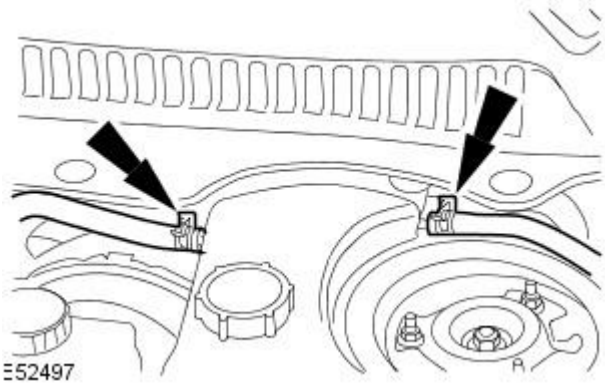

21. NOTE: Remove the blanking plugs from the cooling system vent hoses and the coolant expansion tank.

Attach the cooling system vent hoses to the coolant expansion tank.

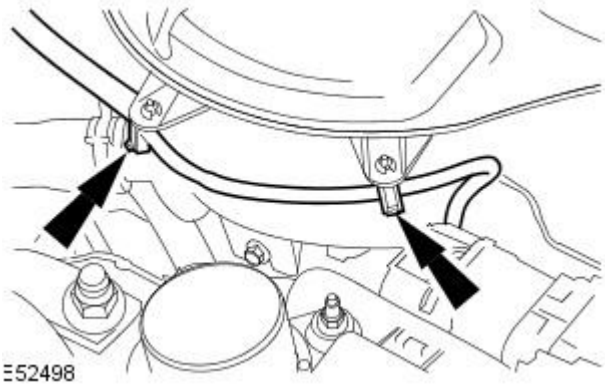

22. Attach the brake fluid low level warning indicator wiring harness to the coolant expansion tank.

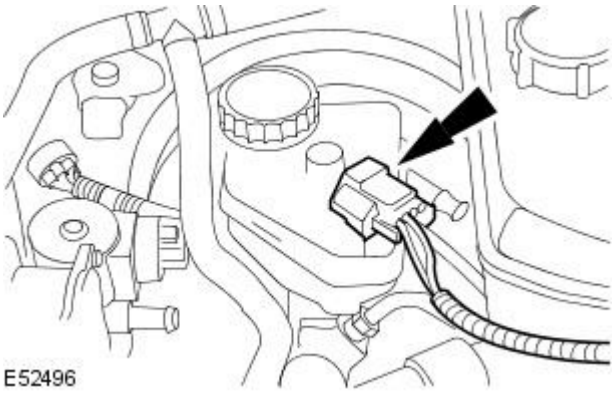

23. Connect the brake fluid low level warning indicator electrical connector.

24. Check and top up the cooling system as required.

Vehicles with manual transmission

25. Bleed the clutch system.
For additional information, refer to: Clutch System Bleeding - Vehicles With: 6-Speed Manual Transaxle - MMT6 (308-00 Manual Transmission/Transaxle and Clutch - General Information, General Procedures).

Power Brake Actuation - Brake Vacuum Pump2.0L NA V6 - AJV6

Removal and Installation

Removal

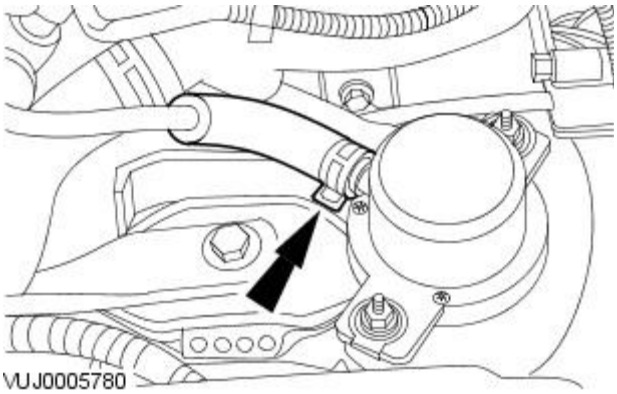

1. Disconnect the vacuum hose.

- Release the retaining clip.

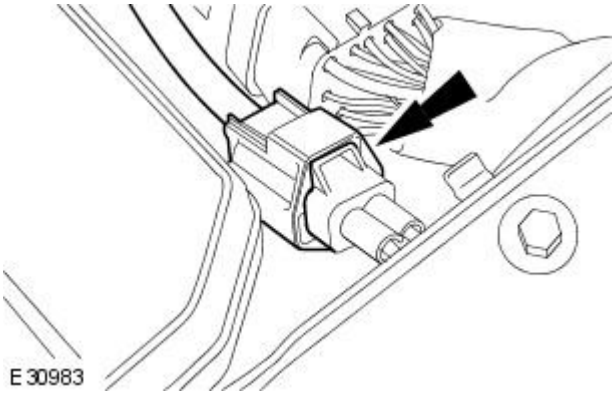

2. Disconnect the electrical connector.

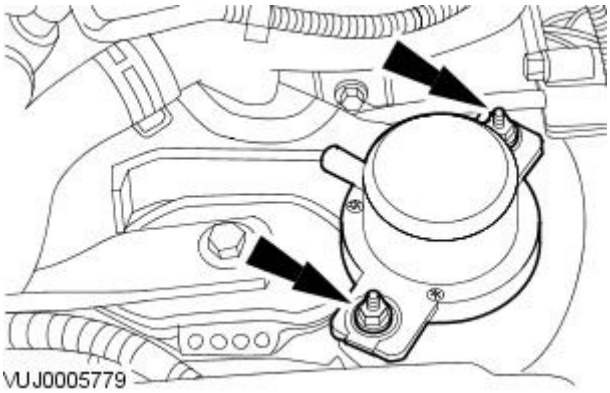

3. Remove the vacuum pump.

Installation

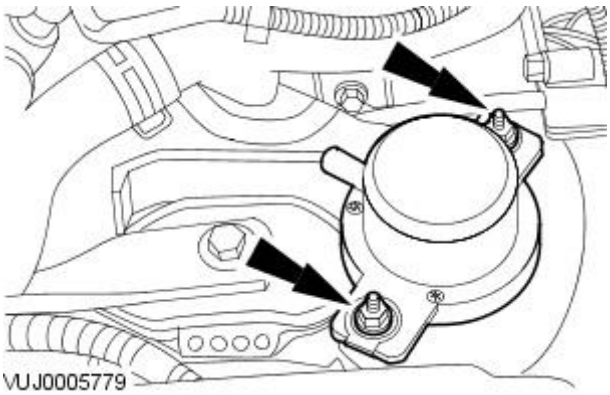

1. To install, reverse the removal procedure.

- Tighten to 25 Nm.

Power Brake Actuation - Brake Vacuum Pump2.0L Duratorq-TDCi/2.2L Duratorq-TDCi (110kW/150PS) - Puma

Removal and Installation

Special Tool(s)	
	Remover/Install, Cooling Hose Clamp 303-397

Removal

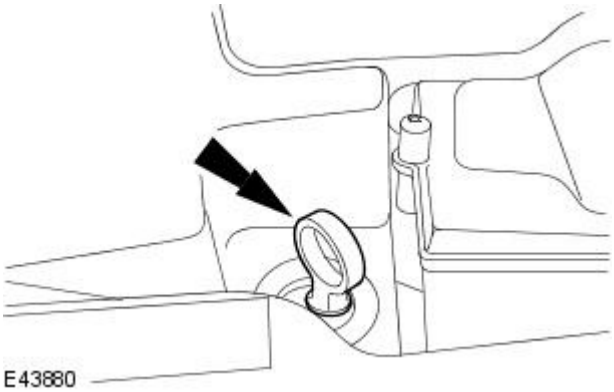

1. Remove the oil level indicator.

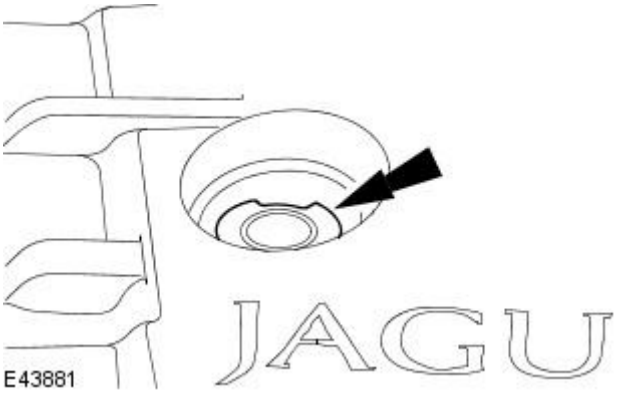

2. Remove the oil filler cap.

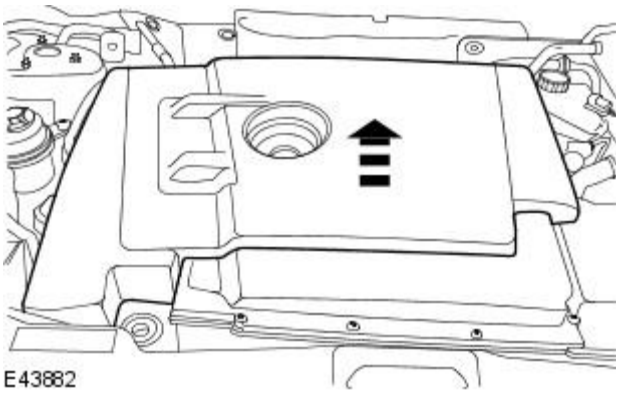

3. Remove the engine cover.

4. Drain the cooling system.
For additional information, refer to: Cooling System Draining, Filling and Bleeding (303-03B Engine Cooling - 2.0L Duratorq-TDCi/2.2L Duratorq-TDCi (110kW/150PS) - Puma, General Procedures).

5. Remove the air cleaner outlet pipe.
For additional information, refer to: Air Cleaner Outlet Pipe (303-12B Intake Air Distribution and Filtering - 2.0L Duratorq-TDCi/2.2L Duratorq-TDCi (110kW/150PS) - Puma, Removal and Installation).

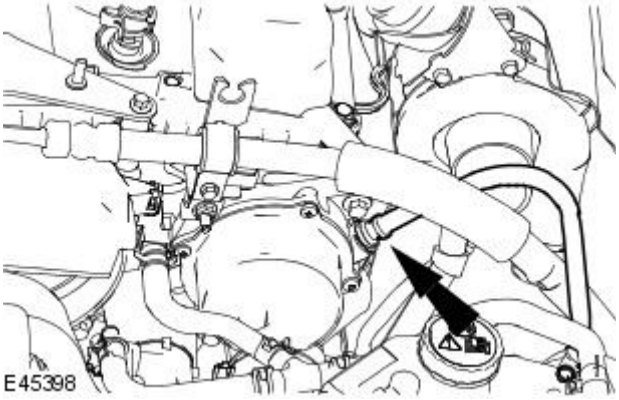

6. Disconnect the brake vacuum hose from the brake vacuum pump.

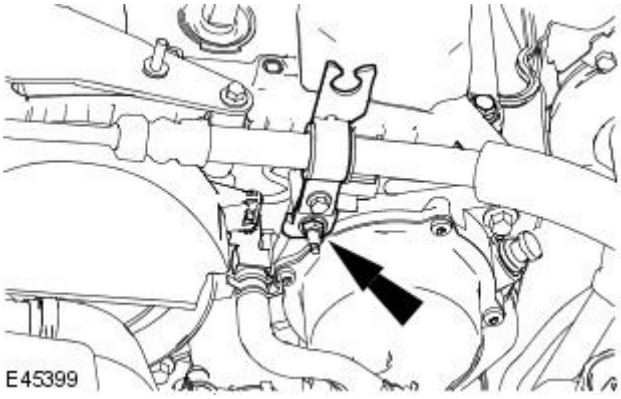

7. Remove the power steering hose support bracket.

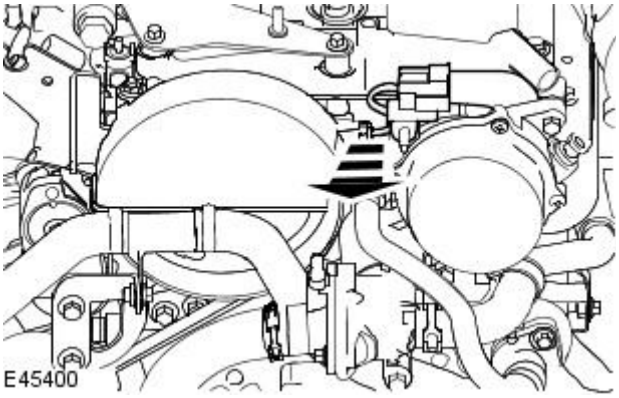

8. Detach the cylinder head temperature (CHT) sensor electrical connector away from the brake vacuum pump.

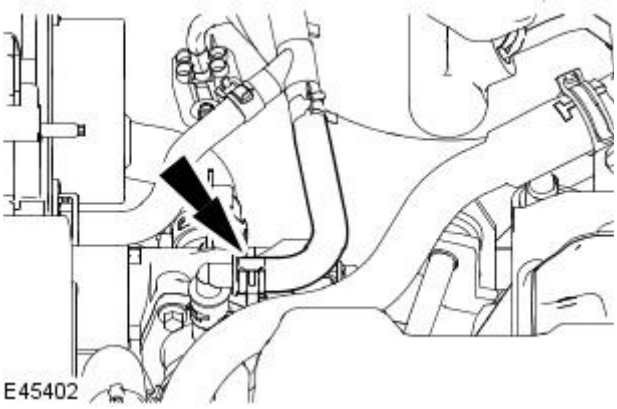

9. Using the special tool 303-397, disconnect the coolant hose.

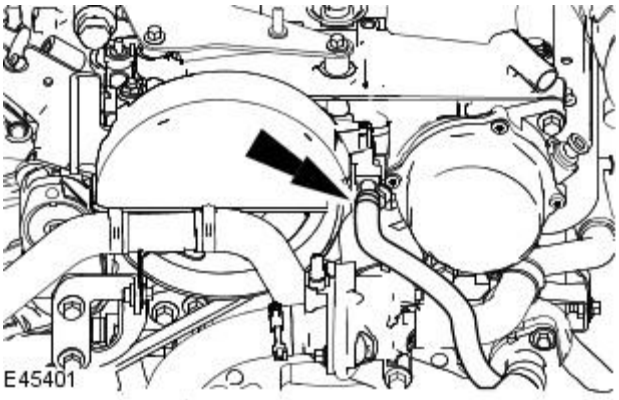

10. Using the special tool 303-397, disconnect the coolant expansion tank hose from the brake vacuum pump.

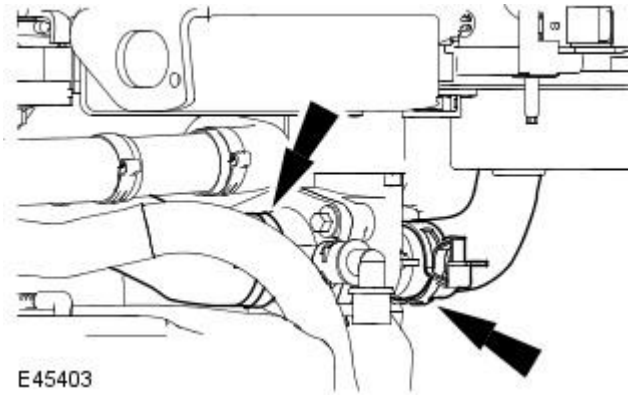

11. Using the special tool 303-397, disconnect the coolant hoses.

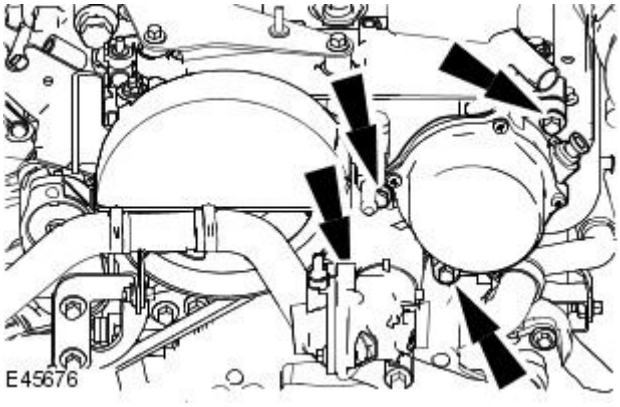

12. Remove the brake vacuum pump.

- Remove and discard the gasket.

Installation

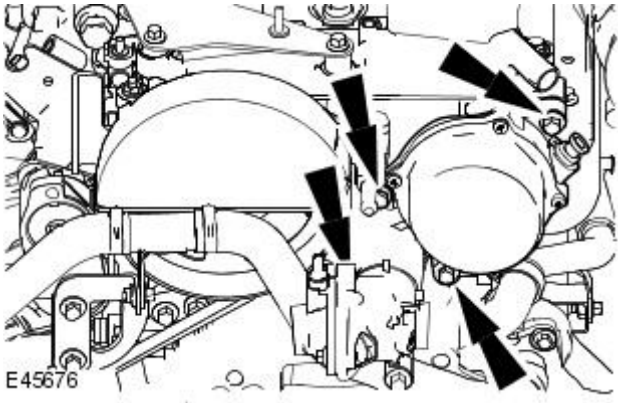

1. CAUTION: Make sure the drive coupling is aligned with the camshaft coupling.

• NOTE: Install a new brake vacuum pump gasket.

To install, reverse the removal procedure.

- Tighten to 23 Nm.

Anti-Lock Control - Stability Assist -

Lubricants, Fluids, Sealers and Adhesives

CAUTION: Do not use brake fluid ITT Super Dot 4 on 2006my vehicles onwards. Failure to follow this instruction may result in damage to the vehicle.

• NOTE: Brake fluid ITT Super Dot 4 has now been superseded by Shell ESL Super Dot 4 which is the Jaguar recommended brake fluid. Shell ESL Super Dot 4 can be used on all model years.

Item	Specification
Brake fluid	ITT Super Dot 4
Brake fluid	Shell ESL Super Dot 4

Torque Specifications

Description	Nm	lb-ft	lb-in
Brake line connections to brake pressure control valve block	17	13	-
Steering wheel sensor securing screws	1	-	9
Yaw rate sensor securing nut	6	-	53
Front wheel speed sensor securing screw	5	-	44
Rear wheel speed sensor securing screw - Vehicles with 2.5L and 3.0L engine	22	16	-
Rear wheel speed sensor securing screw - Vehicles with 2.0L or diesel engine	7	-	62

Anti-Lock Control - Stability Assist - Anti-Lock Control - Stability Assist

Description and Operation

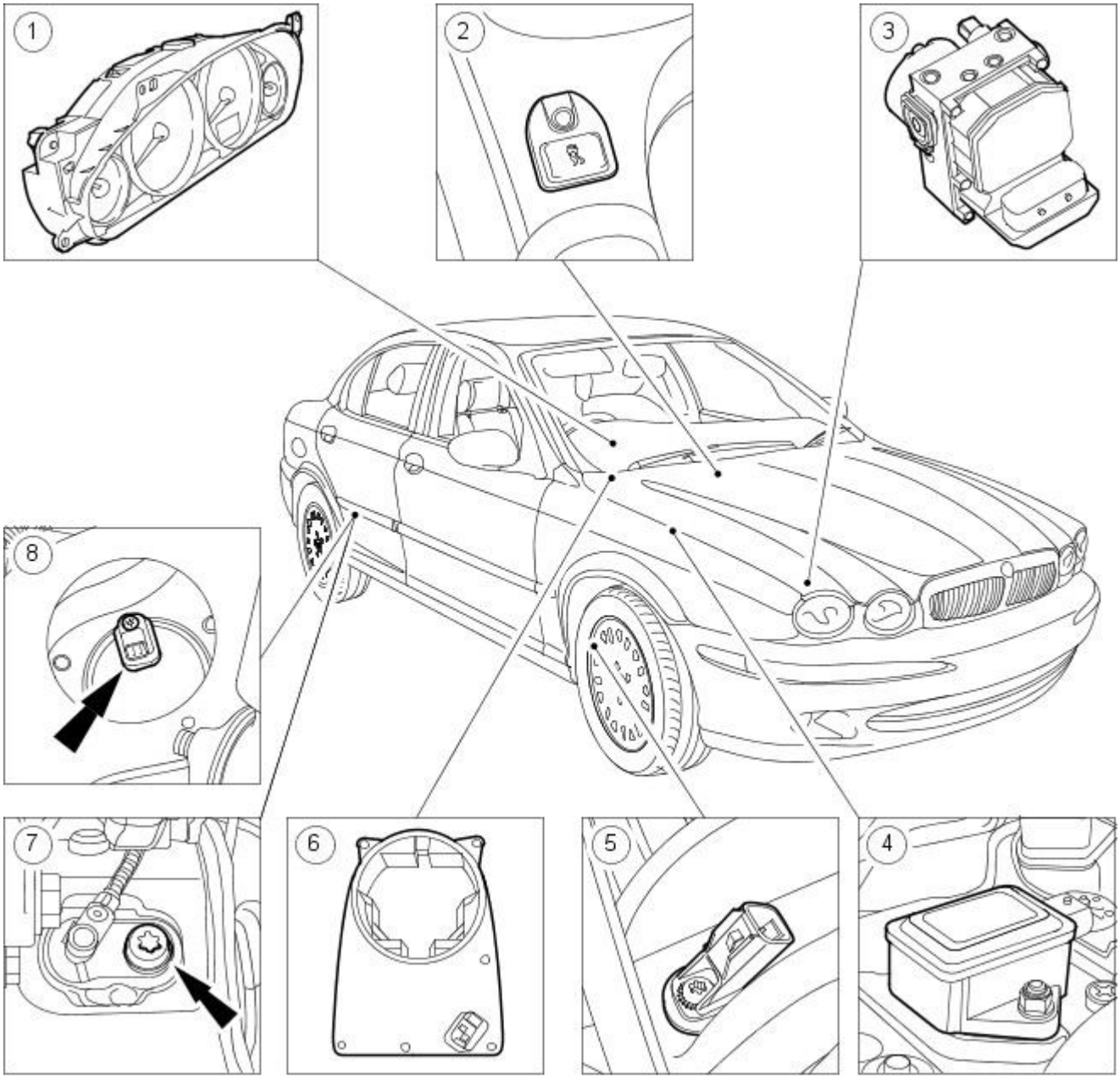

E30961

Item	Part Number	Description
1	—	Instrument cluster
2	-	Dynamic stability control 'ON/OFF' switch
3	-	ABS/Traction control hydraulic unit
4	-	Yaw rate sensor
5	-	Front wheel speed sensor
6	-	Steering wheel angle sensor
7	-	Rear wheel speed sensor - Vehicles with 2.5L and 3.0L engines
8	-	Rear wheel speed sensor - Vehicles with 2.0L or diesel engines

The anti-lock brake system (ABS) modulates brake pressure on each wheel independently to maintain vehicle stability during braking. The ABS continually monitors the rotational velocity of each wheel anytime the ignition switch is in the RUN position and determines if a tire is loosing traction when the brakes are applied. Only then does the ABS intervene to modulate the brake pressure to the necessary wheel. The modulation continues until the wheel rotates freely. The brake pressure is then restored and the modulate/restore cycle is repeated whenever loss of traction is detected. This cycle occurs at a rate of several times per second.

The ABS module is capable of detecting the following system conditions:

- Hydraulic valve failure
- Wheel speed sensor failure
- ABS power relay short circuit
- Interconnect failures to the ABS sensors, power and ground to the ABS module
- Over/under voltage conditions

The ABS provides self-diagnostics and displays failure messages, via the ABS indicator, in the instrument cluster. Failure of the ABS module, for whatever reason, will not compromise the normal operation of the brake system.

Dynamic stability control (DSC) maximizes vehicle stability under all conditions. The DSC system compares actual vehicle course to that intended by the driver. If the intended course differs from the actual course due to over steer or under steer conditions, the DSC system will brake individual wheels and reduce engine torque to bring the vehicle back to the driver's intended direction. By using a combined yaw rate sensor and lateral accelerometer, the vehicles rotational motion around its vertical axis and centrifugal forces generated while cornering are calculated to determine the vehicle's actual behavior. Using additional sensors for detecting steering wheel position and road wheel speed

enables the system to recognize the driver's intentions.

The DSC system also incorporates emergency brake assist (EBA), which measures the rate at which the brake pressure increases during a braking manoeuvre. If the system detects an emergency braking situation, EBA automatically initiates the full braking effect. This can reduce the stopping distances in critical situations, therefore allowing an inexperienced driver to stop in the same distance as an experienced driver.

On vehicles with 2.0L or diesel engines the traction control system (TCS) is incorporated into the anti-lock brake system (ABS). On vehicles with 2.5L and 3.0L engines the traction control is an additional function added to the DSC system. The vehicles driven wheels are continually monitored for wheel spin relative to the calculated reference speed and to each other. If wheel spin is detected, the traction control function intervenes independently of the driver, applying brake pressure to the slipping wheel and reducing the engine drive torque supply. Meanwhile, brake pressure is modulated by the traction control until traction is re-established. Traction control brake actuation is diminished above 40 kph (25 mph). Above this speed traction control relies primarily on engine torque reduction.

Dynamic stability control is enabled/disabled via the DSC 'ON/OFF' switch. When the switch is in the 'OFF' position, the amber DSC warning lamp solidly illuminates within the instrument cluster message center. The DSC is automatically activated when the ignition is switched on. The DSC provides self-diagnostics also via the instrument cluster message center.

The traction control brake intervention is automatically disabled whenever the brakes exceed a temperature limit. The traction brake intervention will remain disabled until the brakes have cooled, irrespective of ignition switch position or ignition switch cycling.

Published: 11-May-2011

Anti-Lock Control - Stability Assist - Anti-Lock Control - Stability AssistVIN Range: C00344->J12991

Diagnosis and Testing

Principle of operation

The anti-lock brake system (ABS) modulates brake pressure on each wheel independently to maintain vehicle stability during braking. The ABS continually monitors the rotational velocity of each wheel anytime the ignition switch is in the **ON** position and determines if a tire is skidding when the brakes are applied. Only then does the ABS intervene to modulate the brake pressure to the skidding wheel. The modulation continues until the wheel rotates freely. The brake pressure is then restored and the modulate/restore cycle is repeated whenever skidding is detected. This cycle occurs at a rate of several times per second.

The ABS module is capable of detecting the following system conditions:

- hydraulic valve failure
- wheel speed sensor failure
- ABS power relay short circuit
- interconnect failures to the ABS sensors, power and ground to the ABS module
- over/under voltage conditions

The ABS provides failure messages, via the ABS indicator, in the instrument cluster. Failure of the ABS module, for whatever reason, will not compromise the normal operation of the brake system.

Dynamic Stability Control (DSC) equipped vehicles

DSC maximizes vehicle stability under all conditions. The DSC system compares actual vehicle course to that intended by the driver. If the intended course differs from the actual course due to over steer or under steer conditions, the DSC system will brake individual wheels and reduce engine torque to bring the vehicle back to the driver's intended direction. By using a combined yaw rate sensor and lateral accelerometer, the vehicles rotational motion around its vertical axis and centrifugal forces generated while cornering are calculated to determine the vehicle's actual behavior. Using additional sensors for detecting steering wheel position and road wheel speed enables the system to recognize the driver's intentions.

DSC/TCS is enabled/disabled via the DSC/TCS **ON/OFF** switch. When the switch is in the **OFF** position, the amber DSC/TCS warning lamp solidly illuminates within the instrument cluster message center. The DSC/TCS is automatically activated when the ignition is switched on. The DSC/TCS also provides failure messages via the instrument cluster message center.

On 2.0L vehicles the traction control system (TCS) is incorporated into the anti-lock brake system (ABS). Where DSC is fitted, traction control is a function within the DSC system. The vehicle's driven wheels are continually monitored for wheel spin relative to the calculated reference speed and to each other. If wheel spin is detected, the traction control function intervenes independently of the driver, applying brake pressure to the slipping wheel and reducing the engine drive torque supply. Meanwhile, brake pressure is modulated by the traction control until traction is re-established. Traction control brake actuation is diminished above 40 km/h (25 mph). Above this speed traction control relies primarily on engine torque reduction.

The traction control brake intervention is automatically disabled whenever the brakes exceed a temperature limit. The traction brake intervention will remain disabled until the brakes have cooled, irrespective of ignition switch position or ignition switch cycling.

Inspection and Verification

1. **1.** Verify the customer concern.
2. **2.** Confirm if the ABS warning light was illuminated, or still is.

• NOTE: An intermittent fault may allow the warning light to go off. This does not necessarily mean the fault is not present. Some warnings will appear to clear when the ignition is cycled. This is often because the warning has flagged as a result of one of the vehicle's on-board diagnostic routines having run to detect the fault. If the same routine is not run when the ignition is switched **ON**, the warning will not reflag until the routine does run.

3. **3.** In order to confirm the customer concern, it may be necessary to follow a drive cycle which will enable the system to perform it's diagnostic routine (see below).

Diagnostic Drive Cycles

• NOTE: See the DTC index for details of codes and possible sources/actions.

DTC	Cycle to detect fault	Cycle to clear fault	System response to fault detection
C1095	Turn the ignition switch to the **OFF** position. Restart and drive the vehicle to activate ABS	Drive vehicle at more than 40 km/h (25 mph) for more than 2 minutes	ABS shut-down, ABS light **ON**, DSC/TCS shut-down, DSC/TCS light **ON**
C1137	Turn the ignition switch to the **OFF** position, then **ON** for more than 8 minutes	Turn the ignition switch to the **ON** position	ABS shut-down, ABS light **ON**, DSC/TCS shut-down, DSC/TCS light **ON**
C1145/C1155 /C1165/C1175	Turn the ignition switch to the **OFF** position. Restart and drive the vehicle at more than 20 km/h (12.5 mph) for more than 2 minutes	Drive vehicle at more than 20 km/h (12.5 mph)	ABS shut-down, ABS light **ON**, DSC/TCS shut-down, DSC/TCS light **ON**
C1233/C1234 /C1235/C1236	Turn the ignition switch to the **OFF** position. Restart and drive the vehicle at more than 40 km/h (25 mph) for more than 2 minutes	Drive vehicle at more than 20 km/h (12.5 mph)	ABS shut-down, ABS light **ON**, DSC/TCS shut-down, DSC/TCS light **ON**
C1267	Turn the ignition switch to the **OFF** position. Restart and drive the vehicle at more than 40 km/h (25 mph)	Turn the ignition switch to the **ON** position	ABS shut-down, ABS light **ON**, DSC/TCS shut-down, DSC/TCS light **ON**
B1342	Turn the ignition switch to the **OFF** position. Restart and drive the vehicle at more than 20 km/h (12.5 mph)	Turn the ignition switch to the **ON** position	ABS shut-down, ABS light **ON**, DSC/TCS shut-down, DSC/TCS light **ON**
B1676	Turn the ignition switch to the **OFF** position, then turn the ignition switch to the **ON** position	Turn the ignition switch to the **ON** position	System functions between 9 and 19 volts

Visual Inspection

1. **1.** Visually inspect for obvious signs of mechanical or electrical damage.

Mechanical	Electrical
• Check the tire sizes, condition, and inflation • Brake fluid level or leakage • Wheel speed sensor fitment • Wheel speed sensor air gap • Wheel speed sensor toothed wheels (missing teeth/contamination)	• Warning light operation • Fuses (see table) • ABS/Traction control control unit • Wheel speed sensors • Wheel speed sensor link leads • Connectors/pins • Harnesses • Grounds

Fuse Identification Table

Location	Fuse Number	Rating	Circuit
Battery junction box	05	30 Amp	Vacuum module battery supply (2 ltr only)
Central junction box	67	5 Amp	Vacuum module ignition supply (2 ltr only)
Battery junction box	03	60 Amp	ABS/DSC/TCS module battery supply
Central junction box	96	7.5 Amp	ABS/DSC/TCS module ignition supply
Central junction box	90	7.5 Amp	Brake light switch circuit

1. **1.** If an obvious cause for an observed or reported concern is found, correct the cause (if possible) before proceeding to the next step.
2. **2.** If the cause is not visually evident and the Jaguar approved diagnostic system is not available, use a fault code reader to retrieve the fault codes before proceeding to the Diagnostic Trouble Code (DTC) Index Chart.

DTC Index

DTC	Description	Possible Source	Action
C1095	Pump motor circuit fault	• Pump motor circuit; open circuit, short circuit, high resistance • Pump motor failure • Pump motor power supply circuit; open circuit, short circuit to GROUND • Pump motor GROUND circuit; open circuit	The pump motor is internal to the control module. For pump circuit tests, GO to Pinpoint Test I. Please check part is not on any form of prior authorisation before replacement.
C1137	Control module circuit failure	• Control module failure	Please check part is not on any form of prior authorisation before replacement.
C1145	Right-hand front wheel speed sensor (WSS) circuit failure	• Wheel speed sensor circuit(s); open circuit, short circuit	For right-hand front WSS circuit tests, GO to Pinpoint Test A.
C1155	Left-hand front wheel speed sensor (WSS) circuit failure	• Wheel speed sensor circuit(s); open circuit, short circuit	For left-hand front WSS circuit tests, GO to Pinpoint Test B.
C1165	Right-hand rear wheel speed sensor (WSS) circuit failure	• Wheel speed sensor circuit(s); open circuit, short circuit	For right-hand rear WSS circuit tests, GO to Pinpoint Test C.
C1175	Left-hand rear wheel speed sensor (WSS) circuit failure	• Wheel speed sensor circuit(s); open circuit, short circuit	For left-hand rear WSS circuit tests, GO to Pinpoint Test D.
C1222	Wheel speed signal conflict	• Vehicle operating with punctured tire(s) • Mismatched wheel/tire sizes • Wheel speed sensor reluctor tooth damage - one or more wheels	Check wheel/tire sizes and conditions, check for sensor/reluctor damage. Check for associated DTCs. Clear the DTC, check the system for normal operation.
C1233	Left-hand front wheel speed sensor (WSS) signal fault	• Wheel speed sensor failure • Harness damage/kinks • Incorrect air gap • Contamination of the sensor wheel	Check the air gap at the left-hand front WSS, check the harness for damage/kinks. For left-hand front WSS circuit tests, GO to Pinpoint Test B.
C1234	Right-hand front wheel speed sensor (WSS) signal failure	• Wheel speed sensor failure • Harness damage/kinks • Incorrect air gap • Contamination of the sensor wheel	Check the air gap at the right-hand front WSS, check the harness for damage/kinks. For right-hand front WSS circuit tests, GO to Pinpoint Test A.
C1235	Right-hand rear wheel speed sensor (WSS) signal failure	• Wheel speed sensor failure • Harness damage/kinks • Incorrect air gap • Wheel speed sensor reluctor damage (AWD) • Contamination of the sensor wheel	Check the air gap at the right-hand rear WSS, check for reluctor damage (AWD). Check the harness for damage/kinks. For right-hand rear WSS circuit tests, GO to Pinpoint Test C.
C1236	Left-hand rear wheel speed sensor (WSS) signal failure	• Wheel speed sensor failure • Harness damage/kinks • Incorrect air gap • Wheel speed sensor reluctor damage (AWD) • Contamination of the sensor wheel	Check the air gap at the left-hand rear WSS, check for reluctor damage (AWD). Check the harness for damage/kinks. For left-hand rear WSS circuit tests, GO to Pinpoint Test D.
C1266	Modulator solenoids power supply circuit fault	• Power supply failure to valve relay • ABS modulator failure • DSC modulator failure	Check the fuses and power circuit. For additional information, refer to the wiring diagrams. Please check part is not on any form of prior authorisation before replacement.
C1267	Modulator valve fault	• Modulator valve failure	Please check part is not on any form of prior authorisation before replacement.

DTC	Description	Possible Source	Action
C1278	Steering angle sensor CAN message not plausible	• Steering angle sensor not calibrated • Steering angle sensor power supply circuit; open circuit, high resistance • Steering angle sensor failure	For steering angle sensor power supply circuit tests, GO to Pinpoint Test E.
C1279	Yaw rate sensor circuit fault	• Yaw rate sensor circuit; open circuit, short circuit, high resistance • Yaw rate sensor CAN circuit; open circuit • Yaw rate sensor failure	For yaw rate sensor power supply circuit tests,GO to Pinpoint Test F. For yaw rate sensor CAN circuit tests, REFER to: Communications Network - VIN Range: E96603->J28492 (418-00 Module Communications Network, Diagnosis and Testing).
C1280	Yaw rate sensor CAN message not plausible	• Yaw rate sensor failure	Use the Jaguar approved diagnostic system to measure the yaw rate offset. For CAN circuit tests, REFER to: Communications Network - VIN Range: E96603->J28492 (418-00 Module Communications Network, Diagnosis and Testing).
C1282	Lateral acceleration CAN message not plausible	• Yaw rate sensor installation • Yaw rate sensor failure	Check the power supply to the sensor. For additional information, refer to the wiring diagrams. Use the Jaguar approved diagnostic system to measure the lateral accelerator signal. For CAN circuit tests, REFER to: Communications Network - VIN Range: E96603->J28492 (418-00 Module Communications Network, Diagnosis and Testing).
C1288	Brake pressure sensor circuit fault	• Brake pressure sensor circuit; open circuit, short circuit, high resistance • Brake pressure sensor failure	For brake pressure sensor circuit tests, GO to Pinpoint Test G.
C1440	Brake pressure signal fault	• Brake pressure sensor failure • Control module failure	Use the Jaguar approved diagnostic system to measure the brake pressure signals.
C1956	Steering angle sensor fault	• Steering angle sensor CAN circuit; open circuit • Steering angle sensor failure	For CAN circuit tests, REFER to: Communications Network - VIN Range: E96603->J28492 (418-00 Module Communications Network, Diagnosis and Testing).
C1975	DSC signal conflict	• Steering angle sensor incorrectly installed • Steering angle sensor not calibrated - recalibrate using the Jaguar approved diagnostic system • Steering angle sensor failure	Check the installation of the steering angle sensor. Recalibrate as necessary. INSTALL a new sensor if necessary.
B1676	Battery voltage out of range: 9 - 16 volts	• Charging system high/low voltage • Control module failure	For charging system tests, REFER to: (414-00 Battery and Charging System - General Information) Charging System - 2.0L NA V6 - AJV6/2.5L NA V6 - AJV6/3.0L NA V6 - AJ27 (Diagnosis and Testing), Charging System - 2.0L Duratorq-TDCi/2.2L Duratorq-TDCi (110kW/150PS) - Puma (Diagnosis and Testing). Please check part is not on any form of prior authorisation before replacement.
None	Brake light switch circuit fault	• Brake light switch power supply circuit fault • Brake light switch to ABS/DSC module circuit fault • Brake light switch fault	For brake light switch circuit tests, GO to Pinpoint Test H.

Pinpoint Tests

PINPOINT TEST A : DTC C1145, C1234; RIGHT-HAND FRONT WHEEL SPEED SENSOR (WSS) CIRCUIT FAILURE	
CAUTION: To protect against over-voltage and static discharge, the contacts of the wheel speed sensor must not be touched by hand. • NOTE: Where the Jaguar approved diagnostic system is available, use datalogger to monitor the wheel speed sensor values when driving in the straight-ahead position (all sensors should have the same value).	
TEST CONDITIONS	**DETAILS/RESULTS/ACTIONS**
A1: CHECK THE RIGHT-HAND FRONT WSS SENSOR CIRCUIT FOR HIGH RESISTANCE	
	1 Make sure the ignition switch is in the **OFF** position.
	2 Disconnect the ABS/DSC module electrical connector, JB45/JB185.
	3 Disconnect the wheel speed sensor electrical connector, RF01.
	4 Measure the resistance between RF01, pin 02 (W) and JB45/JB185, pin 16 (WR).
	Is the resistance greater than 5 ohms? **Yes** REPAIR the high resistance circuit. For additional information, refer to the wiring diagrams. CLEAR the DTC, test the system for normal operation. **No** GO to A2.
A2: CHECK THE RIGHT-HAND FRONT WSS SENSOR CIRCUIT FOR SHORT CIRCUIT TO BATTERY	
	1 Measure the voltage between RF01, pin 02 (W) and GROUND.
	Is the voltage greater than 3 volts? **Yes** REPAIR the short circuit. For additional information, refer to the wiring diagrams. CLEAR the DTC, test the system for normal operation. **No** GO to A3.
A3: CHECK THE RIGHT-HAND FRONT WSS SENSOR CIRCUIT FOR SHORT CIRCUIT TO GROUND	
	1 Measure the resistance between RF01, pin 02 (W) and GROUND.

	Is the resistance less than 10,000 ohms? **Yes** REPAIR the short circuit. For additional information, refer to the wiring diagrams. CLEAR the DTC, test the system for normal operation. **No** GO to A4.
A4: CHECK THE RIGHT-HAND FRONT WSS POWER CIRCUIT FOR HIGH RESISTANCE	
	1 Disconnect the wheel speed sensor.
	2 Measure the resistance between RF01, pin 01 (R) and JB45/JB185, pin 15 (NR).
	Is the resistance greater than 5 ohms? **Yes** REPAIR the high resistance circuit. For additional information, refer to the wiring diagrams. CLEAR the DTC, test the system for normal operation. **No** GO to A5.
A5: CHECK THE RIGHT-HAND FRONT WSS POWER CIRCUIT FOR SHORT CIRCUIT TO BATTERY	
	1 Measure the voltage between RF01, pin 01 (R) and GROUND.
	Is the voltage greater than 3 volts? **Yes** REPAIR the short circuit. For additional information, refer to the wiring diagrams. CLEAR the DTC, test the system for normal operation. **No** GO to A6.
A6: CHECK THE RIGHT-HAND FRONT WSS POWER CIRCUIT FOR SHORT CIRCUIT TO GROUND	
	1 Measure the resistance between RF01, pin 01 (R) and GROUND.
	Is the resistance less than 10,000 ohms? **Yes** REPAIR the short circuit. For additional information, refer to the wiring diagrams. CLEAR the DTC, test the system for normal operation. **No** INSTALL a new WSS, REFER to: Front Wheel Speed Sensor (206-09 Anti-Lock Control - Stability Assist, Removal and Installation). CLEAR the DTC, test the system for normal operation. If the DTC is repeated, please check part is not on any form of prior authorisation before replacement.

PINPOINT TEST B : DTC C1155, C1233; LEFT-HAND FRONT WHEEL SPEED SENSOR (WSS) CIRCUIT FAILURE

CAUTION: To protect against over-voltage and static discharge, the contacts of the wheel speed sensor must not be touched by hand.

• NOTE: Where the Jaguar approved diagnostic system is available, use datalogger to monitor the wheel speed sensor values when driving in the straight-ahead position (all sensors should have the same value).

TEST CONDITIONS	DETAILS/RESULTS/ACTIONS
B1: CHECK THE LEFT-HAND FRONT WSS SENSOR CIRCUIT FOR HIGH RESISTANCE	
	1 Make sure the ignition switch is in the **OFF** position.
	2 Disconnect the ABS/DSC module electrical connector, JB45/JB185.
	3 Disconnect the wheel speed sensor electrical connector, LF01.
	4 Measure the resistance between LF01, pin 02 (W) and JB45/JB185, pin 12 (W).
	Is the resistance greater than 5 ohms? **Yes** REPAIR the high resistance circuit. For additional information, refer to the wiring diagrams. CLEAR the DTC, test the system for normal operation. **No** GO to B2.
B2: CHECK THE LEFT-HAND FRONT WSS SENSOR CIRCUIT FOR SHORT CIRCUIT TO BATTERY	
	1 Measure the voltage between LF01, pin 02 (W) and GROUND.
	Is the voltage greater than 3 volts? **Yes** REPAIR the short circuit. For additional information, refer to the wiring diagrams. CLEAR the DTC, test the system for normal operation. **No** GO to B3.
B3: CHECK THE LEFT-HAND FRONT WSS SENSOR CIRCUIT FOR SHORT CIRCUIT TO GROUND	
	1 Measure the resistance between LF01, pin 02 (W) and GROUND.
	Is the resistance less than 10,000 ohms? **Yes** REPAIR the short circuit. For additional information, refer to the wiring diagrams. CLEAR the DTC, test the system for normal operation. **No** GO to B4.
B4: CHECK THE LEFT-HAND FRONT WSS POWER CIRCUIT FOR HIGH RESISTANCE	
	1 Disconnect the wheel speed sensor.
	2 Measure the resistance between LF01, pin 01 (N) and JB45/JB185, pin 28 (N).
	Is the resistance greater than 5 ohms? **Yes** REPAIR the high resistance circuit. For additional information, refer to the wiring diagrams. CLEAR the DTC, test the system for normal operation. **No** GO to B5.
B5: CHECK THE LEFT-HAND FRONT WSS POWER CIRCUIT FOR SHORT CIRCUIT TO BATTERY	
	1 Measure the voltage between LF01, pin 01 (N) and GROUND.
	Is the voltage greater than 3 volts? **Yes** REPAIR the short circuit. For additional information, refer to the wiring diagrams. CLEAR the DTC, test the system for normal operation. **No** GO to B6.
B6: CHECK THE LEFT-HAND FRONT WSS POWER CIRCUIT FOR SHORT CIRCUIT TO GROUND	

	1 Measure the resistance between LF01, pin 01 (N) and GROUND.
	Is the resistance less than 10,000 ohms? **Yes** REPAIR the short circuit. For additional information, refer to the wiring diagrams. CLEAR the DTC, test the system for normal operation. **No** INSTALL a new WSS, REFER to: Front Wheel Speed Sensor (206-09 Anti-Lock Control - Stability Assist, Removal and Installation). CLEAR the DTC, test the system for normal operation. If the DTC is repeated, please check part is not on any form of prior authorisation before replacement.

PINPOINT TEST C : DTC C1165, C1235; RIGHT-HAND REAR WHEEL SPEED SENSOR (WSS) CIRCUIT FAILURE

CAUTION: To protect against over-voltage and static discharge, the contacts of the wheel speed sensor must not be touched by hand.

• NOTE: Where the Jaguar approved diagnostic system is available, use datalogger to monitor the wheel speed sensor values when driving in the straight-ahead position (all sensors should have the same value).

TEST CONDITIONS	DETAILS/RESULTS/ACTIONS
C1: CHECK THE RIGHT-HAND REAR WSS SENSOR CIRCUIT FOR HIGH RESISTANCE	
	1 Make sure the ignition switch is in the **OFF** position.
	2 Disconnect the ABS/DSC module electrical connector, JB45/JB185.
	3 Disconnect the wheel speed sensor electrical connector, CA60.
	4 Measure the resistance between CA60, pin 02 (WG) and JB45/JB185, pin 31 (WG).
	Is the resistance greater than 5 ohms? **Yes** REPAIR the high resistance circuit. For additional information, refer to the wiring diagrams. CLEAR the DTC, test the system for normal operation. **No** GO to C2.
C2: CHECK THE RIGHT-HAND REAR WSS SENSOR CIRCUIT FOR SHORT CIRCUIT TO BATTERY	
	1 Measure the voltage between CA60, pin 02 (WG) and GROUND.
	Is the voltage greater than 3 volts? **Yes** REPAIR the short circuit. For additional information, refer to the wiring diagrams. CLEAR the DTC, test the system for normal operation. **No** GO to C3.
C3: CHECK THE RIGHT-HAND REAR WSS SENSOR CIRCUIT FOR SHORT CIRCUIT TO GROUND	
	1 Measure the resistance between CA60, pin 02 (WG) and GROUND.
	Is the resistance less than 10,000 ohms? **Yes** REPAIR the short circuit. For additional information, refer to the wiring diagrams. CLEAR the DTC, test the system for normal operation. **No** GO to C4.
C4: CHECK THE RIGHT-HAND REAR WSS POWER CIRCUIT FOR HIGH RESISTANCE	
	1 Disconnect the wheel speed sensor.
	2 Measure the resistance between CA60, pin 01 (NG) and JB45/JB185, pin 30 (NG).
	Is the resistance greater than 5 ohms? **Yes** REPAIR the high resistance circuit. For additional information, refer to the wiring diagrams. CLEAR the DTC, test the system for normal operation. **No** GO to C5.
C5: CHECK THE RIGHT-HAND REAR WSS POWER CIRCUIT FOR SHORT CIRCUIT TO BATTERY	
	1 Measure the voltage between CA60, pin 01 (NG) and GROUND.
	Is the voltage greater than 3 volts? **Yes** REPAIR the short circuit. For additional information, refer to the wiring diagrams. CLEAR the DTC, test the system for normal operation. **No** GO to C6.
C6: CHECK THE RIGHT-HAND REAR WSS POWER CIRCUIT FOR SHORT CIRCUIT TO GROUND	
	1 Measure the resistance between CA60, pin 01 (NG) and GROUND.
	Is the resistance less than 10,000 ohms? **Yes** REPAIR the short circuit. For additional information, refer to the wiring diagrams. CLEAR the DTC, test the system for normal operation. **No** INSTALL a new WSS, REFER to: Rear Wheel Speed Sensor (206-09 Anti-Lock Control - Stability Assist, Removal and Installation). CLEAR the DTC, test the system for normal operation. If the DTC is repeated, please check part is not on any form of prior authorisation before replacement.

PINPOINT TEST D : DTC C1175, C1236; LEFT-HAND REAR WHEEL SPEED SENSOR (WSS) CIRCUIT FAILURE

CAUTION: To protect against over-voltage and static discharge, the contacts of the wheel speed sensor must not be touched by hand.

• NOTE: Where the Jaguar approved diagnostic system is available, use datalogger to monitor the wheel speed sensor values when driving in the straight-ahead position (all sensors should have the same value).

TEST CONDITIONS	DETAILS/RESULTS/ACTIONS
D1: CHECK THE LEFT-HAND REAR WSS SENSOR CIRCUIT FOR HIGH RESISTANCE	
	1 Make sure the ignition switch is in the **OFF** position.
	2 Disconnect the ABS/DSC module electrical connector, JB45/JB185.
	3 Disconnect the wheel speed sensor electrical connector, CA55.
	4 Measure the resistance between CA55, pin 02 (WU) and JB45/JB185, pin 14 (WU).

	Is the resistance greater than 5 ohms? **Yes** REPAIR the high resistance circuit. For additional information, refer to the wiring diagrams. CLEAR the DTC, test the system for normal operation. **No** GO to D2.
D2: CHECK THE LEFT-HAND REAR WSS SENSOR CIRCUIT FOR SHORT CIRCUIT TO BATTERY	
	1 Measure the voltage between CA55, pin 02 (WU) and GROUND.
	Is the voltage greater than 3 volts? **Yes** REPAIR the short circuit. For additional information, refer to the wiring diagrams. CLEAR the DTC, test the system for normal operation. **No** GO to D3.
D3: CHECK THE LEFT-HAND REAR WSS SENSOR CIRCUIT FOR SHORT CIRCUIT TO GROUND	
	1 Measure the resistance between CA55, pin 02 (WU) and GROUND.
	Is the resistance less than 10,000 ohms? **Yes** REPAIR the short circuit. For additional information, refer to the wiring diagrams. CLEAR the DTC, test the system for normal operation. **No** GO to D4.
D4: CHECK THE LEFT-HAND REAR WSS POWER CIRCUIT FOR HIGH RESISTANCE	
	1 Disconnect the wheel speed sensor.
	2 Measure the resistance between CA55, pin 01 (GB) and JB45/JB185, pin 13 (GB).
	Is the resistance greater than 5 ohms? **Yes** REPAIR the high resistance circuit. For additional information, refer to the wiring diagrams. CLEAR the DTC, test the system for normal operation. **No** GO to D5.
D5: CHECK THE LEFT-HAND REAR WSS POWER CIRCUIT FOR SHORT CIRCUIT TO BATTERY	
	1 Measure the voltage between CA55, pin 01 (GB) and GROUND.
	Is the voltage greater than 3 volts? **Yes** REPAIR the short circuit. For additional information, refer to the wiring diagrams. CLEAR the DTC, test the system for normal operation. **No** GO to D6.
D6: CHECK THE LEFT-HAND REAR WSS POWER CIRCUIT FOR SHORT CIRCUIT TO GROUND	
	1 Measure the resistance between CA55, pin 01 (GB) and GROUND.
	Is the resistance less than 10,000 ohms? **Yes** REPAIR the short circuit. For additional information, refer to the wiring diagrams. CLEAR the DTC, test the system for normal operation. **No** INSTALL a new WSS, REFER to: Rear Wheel Speed Sensor (206-09 Anti-Lock Control - Stability Assist, Removal and Installation). CLEAR the DTC, test the system for normal operation. If the DTC is repeated, please check part is not on any form of prior authorisation before replacement.

PINPOINT TEST E : C1278; STEERING ANGLE SENSOR PLAUSIBILITY ERROR

• NOTE: Calibrate the steering angle sensor, using the Jaguar approved diagnostic system where available. Calibration should be carried out at each removal of the subframe, steering rack, etc.

• NOTE: Where the Jaguar approved diagnostic system is available, use datalogger to monitor the steering angle sensor values when driving in the straight-ahead position.

TEST CONDITIONS	DETAILS/RESULTS/ACTIONS
E1: CHECK THE POWER SUPPLY TO THE STEERING ANGLE SENSOR	
	1 Turn the ignition switch to the **OFF** position.
	2 Disconnect the steering angle sensor electrical connector, IP19.
	3 Turn the ignition switch to the **ON** position.
	4 Measure the voltage between IP19, pin 02 (GW) and GROUND.
	Is the voltage less than 5 volts? **Yes** GO to E2. **No** GO to E3.
E2: CHECK THE STEERING ANGLE SENSOR POWER SUPPLY CIRCUIT FOR HIGH RESISTANCE	
	1 Turn the ignition switch to the **OFF** position.
	2 Disconnect the DSC module electrical connector, JB185.
	3 Measure the resistance between IP19, pin 02 (GW) and JB185, pin 39 (GW).
	Is the resistance greater than 5 ohms? **Yes** REPAIR the high resistance circuit. This circuit includes harness splice, IPS6. For additional information, refer to the wiring diagrams. CLEAR the DTC, test the system for normal operation. **No** REPAIR the circuit between the steering angle sensor and battery. This circuit includes the primary distribution box (fuse 96), the ignition switch and the DSC control module. For additional information, refer to the wiring diagrams. Please check part is not on any form of prior authorisation before replacement.
E3: CHECK THE GROUND TO THE STEERING ANGLE SENSOR	
	1 Turn the ignition switch to the **OFF** position.
	2 Measure the resistance between IP19, pin 01 (B) and GROUND.

	Is the resistance greater than 5 ohms? **Yes** GO to E4. **No** For CAN circuit tests, REFER to: Communications Network - VIN Range: E96603->J28492 (418-00 Module Communications Network, Diagnosis and Testing).
E4: CHECK THE STEERING ANGLE SENSOR GROUND CIRCUIT FOR HIGH RESISTANCE	
	1 Disconnect the DSC control module electrical connector, JB185.
	2 Measure the resistance between IP19, pin 01 (B) and JB185, pin 21 (B).
	Is the resistance greater than 5 ohms? **Yes** REPAIR the high resistance circuit. This circuit includes harness splice, IPS7. For additional information, refer to the wiring diagrams, test the system for normal operation. **No** For CAN circuit tests, REFER to: Communications Network - VIN Range: E96603->J28492 (418-00 Module Communications Network, Diagnosis and Testing).

PINPOINT TEST F : C1279; YAW RATE SENSOR CIRCUIT FAULT

TEST CONDITIONS	DETAILS/RESULTS/ACTIONS
F1: CHECK THE POWER SUPPLY TO THE YAW RATE SENSOR	
	1 Turn the ignition switch to the **OFF** position.
	2 Disconnect the yaw rate sensor electrical connector, IP20.
	3 Turn the ignition switch to the **ON** position.
	4 Measure the voltage between IP20, pin 04 (GW) and GROUND.
	Is the voltage less than 5 volts? **Yes** GO to F2. **No** GO to F3.
F2: CHECK THE YAW RATE SENSOR POWER SUPPLY CIRCUIT FOR HIGH RESISTANCE	
	1 Turn the ignition switch to the **OFF** position.
	2 Disconnect the DSC control module electrical connector, JB185.
	3 Measure the resistance between IP20, pin 04 (GW) and JB185, pin 39 (GW).
	Is the resistance greater than 5 ohms? **Yes** REPAIR the high resistance circuit. This circuit includes harness splice, IPS6. For additional information, refer to the wiring diagrams. CLEAR the DTC, test the system for normal operation. **No** REPAIR the circuit between the yaw rate sensor and battery. This circuit includes the primary distribution box (fuse 96), the ignition switch and the DSC control module. For additional information, refer to the wiring diagrams. Please check part is not on any form of prior authorisation before replacement.
F3: CHECK THE GROUND TO THE YAW RATE SENSOR	
	1 Measure the resistance between IP20, pin 01 (B) and GROUND.
	Is the resistance greater than 5 ohms? **Yes** GO to F4. **No** For CAN circuit tests, REFER to: Communications Network - VIN Range: E96603->J28492 (418-00 Module Communications Network, Diagnosis and Testing).
F4: CHECK THE YAW RATE SENSOR GROUND CIRCUIT FOR HIGH RESISTANCE	
	1 Disconnect the DSC control module electrical connector, JB185.
	2 Measure the resistance between IP20, pin 01 (B) and JB185, pin 21 (B).
	Is the resistance greater than 5 ohms? **Yes** REPAIR the high resistance circuit. This circuit includes harness splice, IPS7. For additional information, refer to the wiring diagrams, test the system for normal operation. **No** For CAN circuit tests, REFER to: Communications Network - VIN Range: E96603->J28492 (418-00 Module Communications Network, Diagnosis and Testing). Please check part is not on any form of prior authorisation before replacement.

PINPOINT TEST G : C1288; BRAKE PRESSURE SENSOR CIRCUIT FAULT

CAUTION: To protect against over-voltage and static discharge, the contacts of the brake pressure sensor must not be touched by hand.

• NOTE: The maximum permitted voltage at the sensor contacts is 5.25 volts.

TEST CONDITIONS	DETAILS/RESULTS/ACTIONS
G1: CHECK THE POWER SUPPLY TO THE BRAKE PRESSURE SENSOR	
	1 Turn the ignition switch to the **OFF** position.
	2 Disconnect the brake pressure sensor electrical connector, JB89.
	3 Turn the ignition switch to the **ON** position.
	4 Measure the voltage between JB89, pin 03 (GB) and GROUND.
	Is the voltage less than 4.5 volts? **Yes** GO to G2. **No** GO to G3.
G2: CHECK THE BRAKE PRESSURE SENSOR POWER SUPPLY CIRCUIT FOR HIGH RESISTANCE	
	1 Turn the ignition switch to the **OFF** position.
	2 Disconnect the DSC module electrical connector, JB185.

	3 Measure the resistance between JB89, pin 03 (GB) and JB185, pin 42 (GB).
	Is the resistance greater than 5 ohms? **Yes** REPAIR the high resistance circuit. For additional information, refer to the wiring diagrams, test the system for normal operation. **No** REPAIR the circuit between the brake pressure sensor and battery. This circuit includes the primary distribution box (fuse 96), the ignition switch and the DSC control module. For additional information, refer to the wiring diagrams.
G3: CHECK THE GROUND TO THE BRAKE PRESSURE SENSOR	
	1 Turn the ignition switch to the **OFF** position.
	2 Measure the resistance between JB89, pin 01 (B) and GROUND.
	Is the resistance greater than 5 ohms? **Yes** GO to G4. **No** GO to G5.
G4: CHECK THE BRAKE PRESSURE SENSOR GROUND CIRCUIT FOR HIGH RESISTANCE	
	1 Disconnect the DSC module electrical connector, JB185.
	2 Measure the resistance between JB89, pin 01 (B) and JB185, pin 25 (B).
	Is the resistance greater than 5 ohms? **Yes** REPAIR the high resistance circuit. For additional information, refer to the wiring diagrams, test the system for normal operation. **No** Please check part is not on any form of prior authorisation before replacement.
G5: CHECK THE BRAKE PRESSURE SENSOR SENSOR CIRCUIT FOR HIGH RESISTANCE	
	1 Disconnect the DSC module electrical connector, JB185.
	2 Measure the resistance between JB89, pin 02 (WG) and JB185, pin 26 (WG).
	Is the resistance greater than 5 ohms? **Yes** REPAIR the high resistance circuit. For additional information, refer to the wiring diagrams, test the system for normal operation. **No** Check the brake light switch circuit. Please check part is not on any form of prior authorisation before replacement.

PINPOINT TEST H : CHECK THE BRAKE LIGHT SWITCH CIRCUIT

TEST CONDITIONS	DETAILS/RESULTS/ACTIONS
H1: CHECK THE POWER SUPPLY TO THE BRAKE LIGHT SWITCH	
	1 Disconnect the brake light switch electrical connector, PA03.
	2 Turn the ignition switch to the **ON** position.
	3 Measure the voltage between PA03, pin 03 (NR) and GROUND.
	Is the voltage less than 10 volts? **Yes** REPAIR the circuit between the brake light switch and battery. This circuit includes the central junction box (fuse 90), and the ignition switch. For additional information, refer to the wiring diagrams, test the system for normal operation. **No** GO to H2.
H2: CHECK THE CIRCUIT BETWEEN THE BRAKE LIGHT SWITCH AND THE ABS/DSC MODULE FOR HIGH RESISTANCE	
	1 Turn the ignition switch to the **OFF** position.
	2 Disconnect the ABS/DSC module electrical connector, JB45/JB185.
	3 Measure the resistance between PA03, pin 03 (NR) and JB45/JB185, pin 32 (GO).
	Is the resistance greater than 5 ohms? **Yes** REPAIR the high resistance circuit. This circuit includes the central junction box. For additional information, refer to the wiring diagrams, test the system for normal operation. **No** GO to H3.
H3: CHECK THE CIRCUIT BETWEEN THE BRAKE LIGHT SWITCH AND THE ABS/DSC MODULE FOR SHORT CIRCUIT TO BATTERY	
	1 Measure the voltage between PA03, pin 03 (NR) and GROUND.
	Is the voltage greater than 3 volts? **Yes** REPAIR the short circuit. This circuit includes the central junction box. For additional information, refer to the wiring diagrams, test the system for normal operation. **No** GO to H4.
H4: CHECK THE FUNCTION OF THE BRAKE LIGHT SWITCH	
	1 Connect an ohmmeter across pins 01 and 03 of the brake light switch.
	2 Operate the brake pedal.
	3 Measure the resistance across the switch as the pedal is operated up and down.
	Does the resistance switch between open and closed circuit as the pedal is operated? **Yes** Please check part is not on any form of prior authorisation before replacement. **No** INSTALL a new brake light switch. TEST the system for normal operation.

PINPOINT TEST I : PUMP MOTOR AND SOLENOIDS POWER OR GROUND CIRCUIT FAULT

• NOTE: Before beginning this test, check if the pump motor is running constantly. If the pump motor does run constantly, suspect an ABS/DSC module fault.

TEST CONDITIONS	DETAILS/RESULTS/ACTIONS
I1: CHECK THE POWER SUPPLY TO THE PUMP MOTOR AND SOLENOIDS	
	1 Make sure the ignition switch is in the **OFF** position.
	2 Disconnect the ABS/DSC control module electrical connector, JB45/JB185.
	3 Measure the voltage between JB45/JB185, pin 02 (R) and GROUND.

	4 Measure the voltage between JB45/JB185, pin 06 (R) and GROUND.
	Is either voltage less than 10 volts? **Yes** REPAIR the circuit between the ABS/DSC module and battery. This circuit includes the battery junction box (fuse 03) and harness splice, JBS27. For additional information, refer to the wiring diagrams. **No** GO to I2.
I2: CHECK THE GROUND TO THE ABS/DSC MODULE	
	1 Measure the resistance between JB45/JB185, pin 01 (B) and GROUND.
	2 Measure the resistance between JB45/JB185, pin 05 (B) and GROUND.
	Is either resistance greater than 5 ohms? **Yes** REPAIR the high resistance circuit. For additional information, refer to the wiring diagrams. **No** RECHECK the DTCs. Please check part is not on any form of prior authorisation before replacement.

Anti-Lock Control - Stability Assist - Anti-Lock Control - Stability AssistVIN Range: J12992->V99999

Diagnosis and Testing

Principles of Operation

For a detailed description of the Anti-Lock Control - Stability Assist systems, refer to the relevant Description and Operation sections in the workshop manual. REFER to: Anti-Lock Control - Stability Assist (206-09 Anti-Lock Control - Stability Assist, Description and Operation).

Inspection and Verification

• NOTE: An intermittent fault may allow the warning light to go off. This does not necessarily mean the fault is not present. Some warnings will appear to clear when the ignition is cycled. This is often because the warning has flagged as a result of one of the vehicle's on-board diagnostic routines having run to detect the fault. If the same routine is not run when the ignition is switched ON, the warning will not reflag until the routine does run.

1. **1.** Verify the customer concern.
2. **2.** Visually inspect for obvious signs of mechanical or electrical damage.

Visual inspection

Mechanical	Electrical
• Check the tire sizes, condition, and inflation • Brake fluid level or leakage • Wheel speed sensor fitment • Wheel speed sensor air gap • Wheel speed sensor toothed wheels (missing teeth/contamination) • Wheel bearings	• Warning light operation • Fuses • Anti-lock Brake System (ABS) • Traction Control System (TCS) • Dynamic Stability Control (DSC) • Hydraulic Control Unit (HCU) • Steering wheel rotation sensor • Wheel Speed Sensors (WSS) • Wheel speed sensor link leads • Connectors/terminals • Harnesses • Grounds

3. **3.** If an obvious cause for an observed or reported concern is found, correct the cause (if possible) before proceeding to the next step

DTC index

CAUTION: When probing connectors to take measurements in the course of the pinpoint tests, use the adaptor kit, part number 3548-1358-00.

• NOTE: If the control module/HCU is suspect and the vehicle remains under manufacturer warranty, refer to the Warranty Policy and Procedures manual (section B1.2), or determine if any prior approval programme is in operation, prior to the installation of a new module/HCU.

• NOTE: Generic scan tools may not read the codes listed, or may read only five digit codes. Match the five digits from the scan tool to the first five digits of the seven digit code listed to identify the fault (the last two digits give additional information read by the manufacturer approved diagnostic system).

• NOTE: When performing electrical voltage or resistance tests, always use a digital multimeter (DMM) accurate to three decimal places, and with an up-to-date calibration certificate. When testing resistance, always take the resistance of the DMM leads into account.

• NOTE: Check and rectify basic faults before beginning diagnostic routines involving pinpoint tests.

• NOTE: Inspect connectors for signs of water ingress, and pins for damage and/or corrosion.

• NOTE: If DTCs are recorded and, after performing the pinpoint tests, a fault is not present, an intermittent concern may be the cause. Always check for loose connections and corroded terminals.

DTC	Description	Possible cause	Action
C006308	Yaw Rate Sensor	• Bus signal / message failures which cannot be assigned to a specific signal or message • Yaw rate sensor signal is in a valid range but is implausible • Yaw rate sensor not correctly mounted • Yaw rate sensor not correctly connected • Ignition supply to yaw rate sensor open circuit, short to power, short to ground • Ground line to yaw rate sensor open circuit, short to power, short to ground • Yaw rate sensor internal failure	Check yaw rate sensor for correct mounting. Check yaw rate sensor connector for corrosion and correct installation. Refer to the electrical guides and check yaw rate supply, ground circuits for short to ground, power and open circuit. Install yaw rate sensor as required. Road test vehicle to ensure DSC lamp is extinguished.

DTC	Description	Possible cause	Action
C007298	Brake Temperature Too High	• Component or system over temperature. The HCU has detected that the temperature is too high for the correct operation of component or system • Overheating of at least one hydraulic braking circuit	Check brake system for binding, dragging brakes.
C110964	Vehicle Dynamics Control Switch	• Signal plausibility failure. The HCU has detected a plausibility failure • Traction switch has been operated to frequently, greater than 15 times within 30 seconds • Traction switch has been operated for too long • Traction switch is stuck closed • Traction off circuit short to ground • Damage or corrosion to traction off circuit wiring or connectors	Verify with customer that switch has not been depressed for greater than 10 seconds or repeatedly pressed. Using the manufacturer approved diagnostic system check datalogger signal 2B05 electronic traction control / dynamic stability control input/output, for sticking switch. Refer to the electrical guides and check traction off circuit for short to ground. Check for damage or corrosion to traction off circuit wiring and connectors. Install traction switch as required.
C1A0000	Control Module	• Internal failure control module	Clear DTCs using the manufacturer approved diagnostic system, confirm fault is still present. Suspect the HCU, check and install a new unit as required, refer to the new module/component installation note at the top of the DTC Index. After replacement the new HCU must be configured, by carrying out the following procedure. Ignition ON for 30 seconds, brake warning lamps will remain illuminated. Ignition OFF. Ignition ON, brake warning lamps will extinguish after 3 seconds.
C1A0001	Electronic Control Unit	• General Electrical Failure • Implausible HCU valve actuation • Internal failure	Clear DTCs using the manufacturer approved diagnostic system, confirm fault is still present. Suspect the HCU, check and install a new unit as required, refer to the new module/component installation note at the top of the DTC Index. After replacement the new HCU must be configured, by carrying out the following procedure. Ignition ON for 30 seconds, brake warning lamps will remain illuminated. Ignition OFF. Ignition ON, brake warning lamps will extinguish after 3 seconds.
C1A0016	System Voltage Low	• Circuit voltage below threshold. The HCU has measured a voltage below a specified range but not necessarily a short to ground • HCU supply voltage less than 9.3 volts, pump running or less than 9.6 volts, pump not running • Low or discharged battery • Ground circuit to module high resistance, poor connection, corroded terminals • Motor ground circuit to module high resistance, poor connection, corroded terminals • Ignition circuit to module intermittent open circuit, poor connection, corroded terminals • Pump supply circuit to module intermittent open circuit, poor connection, corroded terminals • Solenoid supply circuit to module intermittent open circuit, poor connection, corroded terminals	Check vehicle battery is at correct voltage and is not low or discharged. Check vehicle charging system is correctly charging the battery. Refer to the electrical guides and check ground circuit to module for high resistance, poor connection, corroded terminals. Motor ground circuit to module for high resistance, poor connection, corroded terminals. Ignition circuit to module intermittent for open circuit, poor connection, corroded terminals. Pump supply circuit to module for intermittent open circuit, poor connection, corroded terminals. Solenoid supply circuit to module for intermittent open circuit, poor connection, corroded terminals.
C1A0017	System Voltage High	• Circuit voltage above threshold. The HCU has measured a voltage above a specified range but not necessarily a short	Using the manufacturer approved diagnostic system check other control modules for similar DTCs. Check vehicle battery is at correct voltage and is not above or overcharged condition. Check vehicle charging system is correctly charging the battery.

DTC	Description	Possible cause	Action
		to battery • Module supply voltage greater than 16.8 volts • Over voltage of the battery charging system • Over voltage measured between module ignition and ground • Over voltage measured between module pump supply and motor ground • Over voltage measured between module solenoid supply and motor ground	
C1A001C	System Voltage Unstable	• Circuit voltage out of range. The HCU has measured a voltage outside the expected range but not identified as too high or too low • Module supply voltage equal too or less than 8.2 volts for more than 20ms • Low or discharged battery • Battery charging system failure • Ground circuit to module high resistance, poor connection, corroded terminals • Motor ground circuit to module high resistance, poor connection, corroded terminals • Ignition circuit to module intermittent open circuit, poor connection, corroded terminals • Pump supply circuit to module intermittent open circuit, poor connection, corroded terminals • Solenoid supply circuit to module intermittent open circuit, poor connection, corroded terminals	Check vehicle battery is at correct voltage and is not low or discharged. Check vehicle charging system is correctly charging the battery. Refer to the electrical guides and check ground circuit to module for high resistance, poor connection, corroded terminals. Motor ground circuit to module for high resistance, poor connection, corroded terminals. Ignition circuit to module intermittent for open circuit, poor connection, corroded terminals. Pump supply circuit to module for intermittent open circuit, poor connection, corroded terminals. Solenoid supply circuit to module for intermittent open circuit, poor connection, corroded terminals.
C1A004A	Variant Selection	• Incorrect component installed. Mismatch between the hardware connected to the HCU/ module and the hardware expected by the HCU • Transferred variant value not released • Transferred variant value outside permissible range • EEPROM values with valid HCU data implausible • Transferred variant values from engine control module are invalid for this vehicle	Clear DTCs using the manufacturer approved diagnostic system. Cycle ignition and wait for brake warning lamps to extinguish, allow up to 30 seconds. If the DTC is still present carry out the following procedure again using the manufacturer approved diagnostic system vehicle configuration main menu, special applications, vehicle identification block read. Contact dealer technical support.
C1A0067	Control Module	• Signal incorrect after event. The HCU has not seen the correct change of a parameter or group of parameters in response to a particular event • Incorrect tire pressure • Incorrect size wheel or tire	Using the manufacturer approved diagnostic system compare the signals for all the WSS simultaneously. Check for similar values and operation between each WSS. Check for other WSS DTCs, rectify as required. Clear DTCs road test and re-check. Contact dealer technical support.

DTC	Description	Possible cause	Action
		• Poor WSS signal at higher frequency. At approximately 50 kph (31 mph) WSS may not compare and show a variance	
C1A7614	Valve Relay Circuit	• Circuit short to ground or open • Solenoid supply circuit open • Solenoid supply circuit short to ground • Internal failure in HCU, solenoid valve supply relay	Refer to the electrical guides and check solenoid supply circuit for short to ground and open circuit. Suspect the HCU, check and install a new unit as required, refer to the new module/component installation note at the top of the DTC Index. After replacement the new HCU must be configured, by carrying out the following procedure. Ignition ON for 30 seconds, brake warning lamps will remain illuminated. Ignition OFF. Ignition ON, brake warning lamps will extinguish after 3 seconds.
C1A7804	Generic Valve Fault	• System internal failures • Internal failure in HCU	Suspect the HCU, check and install a new unit as required, refer to the new module/component installation note at the top of the DTC Index. After replacement the new HCU must be configured, by carrying out the following procedure. Ignition ON for 30 seconds, brake warning lamps will remain illuminated. Ignition OFF. Ignition ON, brake warning lamps will extinguish after 3 seconds.
C1A9114	Front Left Wheel Speed Sensor Circuit	• Circuit short to ground or open. The DTC is logged when the ignition is on, the vehicle is stationary and the fault is present for greater than 240 ms • WSS signal front left circuit short to ground • WSS signal front left circuit short to power • WSS signal front left open circuit • WSS supply front left circuit short to ground • WSS supply front left circuit short to power • WSS supply front left open circuit • WSS internal failure	Check connectors of harness to WSS, intermediate harness connectors and harness connectors to module for corrosion and correct terminal tension. Refer to the electrical guides and check WSS signal front left circuit for short to ground, power and open circuit. Refer to the electrical guides and check WSS supply front left circuit for short to ground, power and open circuit. Check WSS circuit for damage to insulation. Install WSS harness as required. Install WSS as required.
C1A9129	Front Left Wheel Speed Sensor Circuit	• Signal invalid. A failure where the value of the signal is not plausible given the operating conditions • Excessive free play in wheel bearings • Incorrect size wheel or tire • Excessive air gap between WSS and sensor target ring • Incorrect number of teeth on WSS target ring • Corrosion of WSS in sensor mounting • Electrical interference on the WSS signal circuit • Damage to WSS circuit wiring • WSS's crossed over, monitoring incorrect wheels • Internal failure in HCU	Using the manufacturer approved diagnostic system compare the datalogger signals for all the WSS simultaneously. Check for similar values and operation between each WSS. Check wheel rims and tires are to the correct size. Check WSS target ring air gap is to specification. Check that the WSS target ring is correctly installed, check wheel bearing is correctly installed. Check correct wheel bearing is installed. Check that WSS is not corroded in its mounting bracket. Using the manufacturer approved diagnostic system check that each wheel corresponds correctly to its signal. Suspect the HCU, check and install a new HCU as required, refer to the new module/component installation note at the top of the DTC Index. After replacement the new HCU must be configured, by carrying out the following procedure. Ignition ON for 30 seconds, brake warning lamps will remain illuminated. Ignition OFF. Ignition ON, brake warning lamps will extinguish after 3 seconds.
C1A9214	Rear Left Wheel Speed Sensor Circuit	• Circuit short to ground or open. The DTC is logged when the ignition is on, the vehicle is stationary and the fault is present for greater than 240 ms • WSS signal rear left circuit short to ground • WSS signal rear left circuit short to power • WSS signal rear left open circuit • WSS supply rear left circuit short to ground • WSS supply rear left circuit short to power • WSS supply rear left	Check connectors of harness to WSS, intermediate harness connectors and harness connectors to module for corrosion and correct terminal tension. Refer to the electrical guides and check WSS signal rear left circuit for short to ground, power and open circuit. Refer to the electrical guides and check WSS supply rear left circuit for short to ground, power and open circuit. Check WSS circuit for damage to insulation. Install WSS harness as required. Install WSS as required.

DTC	Description	Possible cause	Action
		open circuit • WSS internal failure	
C1A9229	Rear Left Wheel Speed Sensor Circuit	• Signal invalid. A failure where the value of the signal is not plausible given the operating conditions • Incorrect size wheel or tire • Excessive air gap between WSS and sensor target ring • Distortion or displacement of WSS target ring • Incorrect number of teeth on WSS target ring • Corrosion of WSS in sensor mounting • WSS target ring dirty or damaged teeth • WSS's crossed over, monitoring incorrect wheels • Internal failure in HCU	Using the manufacturer approved diagnostic system compare the datalogger signals for all the WSS simultaneously. Check for similar values and operation between each WSS. Check wheel rims and tires are to the correct size. Check WSS target ring air gap is to specification. Check that the WSS target ring is correctly installed, secure and is not misaligned or has drifted off centre. Check correct number of teeth are on the WSS target ring. Check that WSS is not corroded in its mounting bracket. Check WSS target ring is not dirty or damaged. Using the manufacturer approved diagnostic system check that each wheel corresponds correctly to its signal. Suspect the HCU, check and install a new HCU as required, refer to the new module/component installation note at the top of the DTC Index. After replacement the new HCU must be configured, by carrying out the following procedure. Ignition ON for 30 seconds, brake warning lamps will remain illuminated. Ignition OFF. Ignition ON, brake warning lamps will extinguish after 3 seconds.
C1A9314	Rear Right Wheel Speed Sensor Circuit	• Circuit short to ground or open. The DTC is logged when the ignition is on, the vehicle is stationary and the fault is present for greater than 240 ms • WSS signal rear right circuit short to ground • WSS signal rear right circuit short to power • WSS signal rear right open circuit • WSS supply rear right circuit short to ground • WSS supply rear right circuit short to power • WSS supply rear right open circuit • WSS internal failure	Check connectors of harness to WSS, intermediate harness connectors and harness connectors to module for corrosion and correct terminal tension. Refer to the electrical guides and check WSS signal rear right circuit for short to ground, power and open circuit. Refer to the electrical guides and check WSS supply rear right circuit for short to ground, power and open circuit. Check WSS circuit for damage to insulation. Install WSS harness as required. Install WSS as required.
C1A9329	Rear Right Wheel Speed Sensor Circuit	• Signal invalid. A failure where the value of the signal is not plausible given the operating conditions • Incorrect size wheel or tire • Excessive air gap between WSS and sensor target ring • Distortion or displacement of WSS target ring • Incorrect number of teeth on WSS target ring • Corrosion of WSS in sensor mounting • WSS target ring dirty or damaged teeth • WSS's crossed over, monitoring incorrect wheels • Internal failure in HCU	Using the manufacturer approved diagnostic system compare the datalogger signals for all the WSS simultaneously. Check for similar values and operation between each WSS. Check wheel rims and tires are to the correct size. Check WSS target ring air gap is to specification. Check that the WSS target ring is correctly installed, secure and is not misaligned or has drifted off centre. Check correct number of teeth are on the WSS target ring. Check that WSS is not corroded in its mounting bracket. Check WSS target ring is not dirty or damaged. Using the manufacturer approved diagnostic system check that each wheel corresponds correctly to its signal. Suspect the HCU, check and install a new HCU as required, refer to the new module/component installation note at the top of the DTC Index. After replacement the new HCU must be configured, by carrying out the following procedure. Ignition ON for 30 seconds, brake warning lamps will remain illuminated. Ignition OFF. Ignition ON, brake warning lamps will extinguish after 3 seconds.
C1A9414	Front Right Wheel Speed Sensor Circuit	• Circuit short to ground or open. The DTC is logged when the ignition is on, the vehicle is stationary and the fault is present for greater than 240 ms • WSS signal front right circuit short to ground • WSS signal front right circuit short to power • WSS signal front right open circuit • WSS supply front right	Check connectors of harness to WSS, intermediate harness connectors and harness connectors to module for corrosion and correct terminal tension. Refer to the electrical guides and check WSS signal front right circuit for short to ground, power and open circuit. Refer to the electrical guides and check WSS supply front right circuit for short to ground, power and open circuit. Check WSS circuit for damage to insulation. Install WSS harness as required. Install WSS as required.

DTC	Description	Possible cause	Action
		circuit short to ground • WSS supply front right circuit short to power • WSS supply front right open circuit • WSS internal failure	
C1A9429	Front Right Wheel Speed Sensor Circuit	• Signal invalid. A failure where the value of the signal is not plausible given the operating conditions • Excessive free play in wheel bearings • Incorrect size wheel or tire • Excessive air gap between WSS and sensor target ring • Incorrect number of teeth on WSS target ring • Corrosion of WSS in sensor mounting • Electrical interference on the WSS signal circuit • Damage to WSS circuit wiring • WSS's crossed over, monitoring incorrect wheels • Internal failure in HCU	Using the manufacturer approved diagnostic system compare the datalogger signals for all the WSS simultaneously. Check for similar values and operation between each WSS. Check wheel rims and tires are to the correct size. Check WSS target ring air gap is to specification. Check that the WSS target ring is correctly installed, check wheel bearing is correctly installed. Check correct wheel bearing is installed. Check that WSS is not corroded in its mounting bracket. Using the manufacturer approved diagnostic system check that each wheel corresponds correctly to its signal. Suspect the HCU, check and install a new HCU as required, refer to the new module/component installation note at the top of the DTC Index. After replacement the new HCU must be configured, by carrying out the following procedure. Ignition ON for 30 seconds, brake warning lamps will remain illuminated. Ignition OFF. Ignition ON, brake warning lamps will extinguish after 3 seconds.
C1A9529	Wheel Speed Sensor Circuit	• Signal invalid. Multiple WSS have invalid, poor signals and are not plausible, the specific WSS cannot be identified • Under inflated tire • Wheel tire size mismatch between front wheels • WSS transposed on front axle, incorrectly assigned at control module cavity • Number of poles on wheel bearing is different between front wheels • Damage to WSS circuit wiring • WSS internal failure • Internal failure in HCU	Using the manufacturer approved diagnostic system compare the datalogger signals for all the WSS simultaneously. Check for similar values and operation between each WSS. Check tires are inflated to correct pressures. Check wheel rims and tires are to the correct size. Refer to the electrical guides and check WSS supply and signal circuits correspond to the correct cavity on HCU. Check correct wheel bearing is installed across the front axle. Refer to the electrical guides and check WSS supply and signal circuits for short to ground, power and open circuit. Install WSS as required. Suspect the HCU, check and install a new HCU as required, refer to the new module/component installation note at the top of the DTC Index. After replacement the new HCU must be configured, by carrying out the following procedure. Ignition ON for 30 seconds, brake warning lamps will remain illuminated. Ignition OFF. Ignition ON, brake warning lamps will extinguish after 3 seconds.
C1A9615	Brake Light Switch Circuit	• Circuit short to battery or open. • Brake switch not correctly adjusted • Brake switch internal failure • Brake lamp ip circuit short to power • Brake lamp ip circuit open	Using the manufacturer approved diagnostic system check datalogger signal 2B00 brake input switch status for toggling switch. Check brake switch is correctly adjusted. Refer to the electrical guides and check brake lamp ip circuit for short to power and open circuit. Install brake lamp switch as required.
C1A9664	Brake Light Switch Circuit	• Signal plausibility failure. The HCU has detected a plausibility failure • The brake light switch signal does not match brake pressure signal • Brake switch not correctly adjusted • Brake switch internal failure • Brake lamp ip circuit short to power • Brake lamp ip circuit open • Internal failure in HCU	Using the manufacturer approved diagnostic system check datalogger signal 2B00 brake input switch status for toggling switch. Check brake switch is correctly adjusted. Refer to the electrical guides and check brake lamp ip circuit for short to power and open circuit. Install brake lamp switch as required. Suspect the HCU, check and install a new HCU as required, refer to the new module/component installation note at the top of the DTC Index. After replacement the new HCU must be configured, by carrying out the following procedure. Ignition ON for 30 seconds, brake warning lamps will remain illuminated. Ignition OFF. Ignition ON, brake warning lamps will extinguish after 3 seconds.
C1A9800	Yaw Rate Sensor Circuit	• General failure. Yaw rate sensor is off CAN bus • Ignition supply to yaw rate sensor open circuit	Check for YRS CAN related DTCs from DSC module. Refer to the electrical guides and check CAN circuits between DSC and YRS. Refer to the electrical guides and check ignition supply to yaw rate sensor for open circuit. Refer to the electrical guides and check ground line to yaw rate sensor for open circuit. Install new yaw rate sensor as required.

DTC	Description	Possible cause	Action
		• Ground line to yaw rate sensor open circuit • Yaw rate sensor sending invalid CAN message • Yaw rate sensor sending initialization status fault • Yaw rate sensor internal failure	
C1A9900	Pressure Sensor Circuit	• HCU internal pressure sensor supply circuit high resistance • HCU internal pressure sensor failure	Suspect the HCU, check and install a new HCU as required, refer to the new module/component installation note at the top of the DTC Index. After replacement the new HCU must be configured, by carrying out the following procedure. Ignition ON for 30 seconds, brake warning lamps will remain illuminated. Ignition OFF. Ignition ON, brake warning lamps will extinguish after 3 seconds.
C1A9913	Pressure Sensor Circuit	• Circuit open. The HCU has determined an open circuit via lack of bias voltage, low current flow, no change in the state of an input in response to an output • HCU internal pressure sensor supply circuit high resistance • HCU internal pressure sensor failure	Suspect the HCU, check and install a new HCU as required, refer to the new module/component installation note at the top of the DTC Index. After replacement the new HCU must be configured, by carrying out the following procedure. Ignition ON for 30 seconds, brake warning lamps will remain illuminated. Ignition OFF. Ignition ON, brake warning lamps will extinguish after 3 seconds.
C1B0000	Steering Angle Sensor	• Steering wheel rotation sensor internal failure of software	Install a new steering wheel rotation sensor. Using the manufacturer approved diagnostic system select the vehicle configuration main menu, set up and configuration, steering angle sensor calibration.
C1B0008	Steering Angle Sensor	• Bus signal / message failures which cannot be assigned to a specific signal or message • Ignition supply to steering wheel rotation sensor open circuit • Ground line to steering wheel rotation sensor open circuit • steering wheel rotation sensor incorrectly mounted • steering wheel rotation sensor internal software failure	Park the vehicle on a level surface with the wheels in the straight ahead position, using the manufacturer approved diagnostic system check datalogger signal 3302 steering wheel angle, value should be less than +/- 15 deg. If outside of this limit the following should be checked. The steering wheel rotation sensor is mounted in correct position and is free to rotate. Vehicle steering geometry. Refer to the electrical guides and check ignition supply to steering wheel rotation sensor for open circuit. Refer to the electrical guides and check ground line to steering wheel rotation sensor for open circuit. Install new steering wheel rotation sensor as required. Using the manufacturer approved diagnostic system select the vehicle configuration main menu, set up and configuration, steering angle sensor calibration.
C1B0054	Steering Angle Sensor	• Missing calibration. The steering wheel rotation sensor has detected a signal range failure • Steering wheel rotation sensor calibration dataset not programmed • Steering wheel rotation sensor incorrectly mounted • Steering wheel rotation sensor not calibrated	Using the manufacturer approved diagnostic system select the vehicle configuration main menu, set up and configuration, steering angle sensor calibration. Check the steering wheel rotation sensor is mounted in correct position and is free to rotate.
C1B0215	Return Pump Circuit	• Circuit short to battery or open • Low or discharged battery • Vehicle charging system failure • Pump supply line is open circuit • Pump supply line short to power • Pump motor actuation failure • Pump motor relay failure • HCU failure	Recharge vehicle battery. Check vehicle charging system. Refer to the electrical guides and check pump supply line for open circuit. Refer to the electrical guides and check pump supply line for short to power. Suspect the HCU, check and install a new HCU as required, refer to the new module/component installation note at the top of the DTC Index.

DTC	Description	Possible cause	Action
C1B0271	Return Pump Circuit	• Actuator stuck. • Low or discharged battery • Vehicle charging system failure • Pump supply line is open circuit • Pump supply line short to power • Pump motor actuation failure • Pump motor relay failure • HCU failure	Recharge vehicle battery. Check vehicle charging system. Refer to the electrical guides and check pump supply line for open circuit. Refer to the electrical guides and check pump supply line for short to power. Suspect the HCU, check and install a new HCU as required, refer to the new module/component installation note at the top of the DTC Index.
U000188	High Speed CAN Communication Bus	• Bus off. • CAN monitoring has detected a fault in the CAN circuit or signal level • CAN H open circuit between HCU, PJB and ECM • CAN L open circuit between HCU, PJB and ECM • CAN H circuit, short to ground between HCU, PJB and ECM • CAN L circuit, short to ground between HCU, PJB and ECM • CAN H circuit, short to power between HCU, PJB and ECM • CAN L circuit, short to power between HCU, PJB and ECM	Carry out any pinpoint test associated with this DTC using the manufacturer approved diagnostic system. Refer to the electrical guides, check between HCU CAN H, PJB CAN H and ECM CAN H for open circuit, short to power, short to ground. Check between HCU CAN L, PJB CAN L and ECM CAN L for open circuit, short to power, short to ground.
U010087	Lost Communication With ECM A	• Missing message. The HCU has not received one or more expected messages from the ECM • CAN H open circuit between HCU, and ECM • CAN L open circuit between HCU, and ECM	Clear DTCs and re-test for reoccurrence of the DTC after 30s with ignition on. Carry out any pinpoint test associated with this DTC using the manufacturer approved diagnostic system. Check ECM for DTCs and refer to the relevant DTC Index. Refer to the electrical guides, check between HCU CAN H and ECM CAN H for open circuit. Check between HCU CAN L and ECM CAN L for open circuit.
U012387	Lost Communication With Yaw Rate Sensor Module	• Missing message. The HCU has not received one or more expected messages from the yaw rate sensor module • Yaw rate sensor not correctly connected • Ignition supply to Yaw rate sensor open circuit • Ground line to Yaw rate sensor open circuit • CAN H open circuit between yaw rate sensor, steering wheel rotation sensor and DSC module • CAN L open circuit between yaw rate sensor, steering wheel rotation sensor and DSC module • Yaw rate sensor failure	Carry out any pinpoint test associated with this DTC using the manufacturer approved diagnostic system. Clear DTCs and check for reoccurrence of the fault after 30 seconds with ignition on. Check yaw rate sensor is correctly connected. Refer to the electrical guides and check ignition supply to Yaw rate sensor for open circuit. Refer to the electrical guides and check ground line to Yaw rate sensor for open circuit. Refer to the electrical guides and check CAN H for open circuit between yaw rate sensor and DSC module. Refer to the electrical guides and check CAN L for open circuit between yaw rate sensor and DSC module. Install new yaw rate sensor as required.
U012687	Lost Communication With Steering Angle Sensor Module	• Missing message. The HCU has not received one or more expected messages from the steering angle sensor module • Steering wheel rotation sensor not correctly connected • Ignition supply to steering wheel rotation sensor open circuit • Ground line to	Carry out any pinpoint test associated with this DTC using the manufacturer approved diagnostic system. Clear DTCs and check for reoccurrence of the fault after 30 seconds with ignition on. Check yaw rate sensor, steering wheel rotation sensor are correctly connected. Refer to the electrical guides and check ignition supply to Yaw rate sensor, steering wheel rotation sensor for open circuit. Refer to the electrical guides and check ground line to Yaw rate sensor, steering wheel rotation sensor for open circuit. Refer to the electrical guides and check CAN H for open circuit between yaw rate sensor, steering wheel rotation sensor and module. Refer to the electrical guides and check CAN L for open circuit between yaw rate sensor, steering wheel rotation sensor and module. Install new steering wheel rotation sensor as required.

DTC	Description	Possible cause	Action
		steering wheel rotation sensor open circuit ● CAN H open circuit between yaw rate sensor, steering wheel rotation sensor and module ● CAN L open circuit between yaw rate sensor, steering wheel rotation sensor and module ● Steering wheel rotation sensor failure	
U040186	Invalid Data Received From ECM	● Signal invalid.	Clear DTCs and re-test for reoccurrence of the DTC after 30s with ignition on. Check ECM for DTCs and refer to the relevant DTC Index.

Anti-Lock Control - Stability Assist - Anti-Lock Brake System (ABS) ModuleVIN Range: C00001->J12991

Removal and Installation

Removal

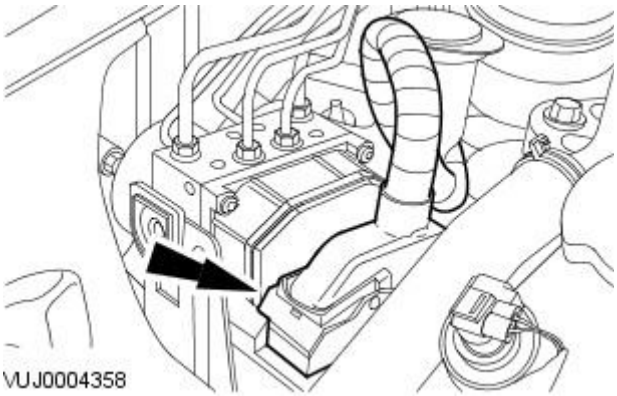

1. Disconnect the anti-lock brake system (ABS) module electrical connector.

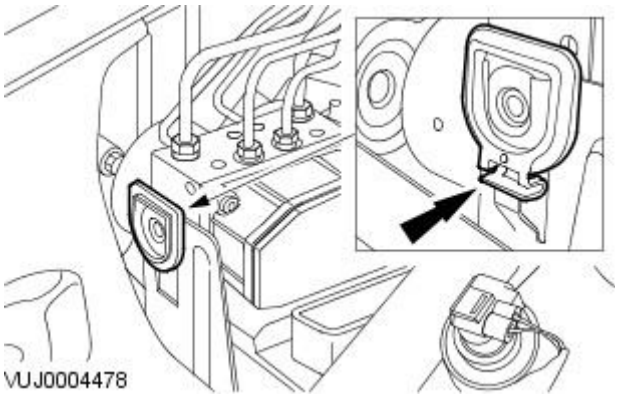

2. Detach the hydraulic control unit (HCU).

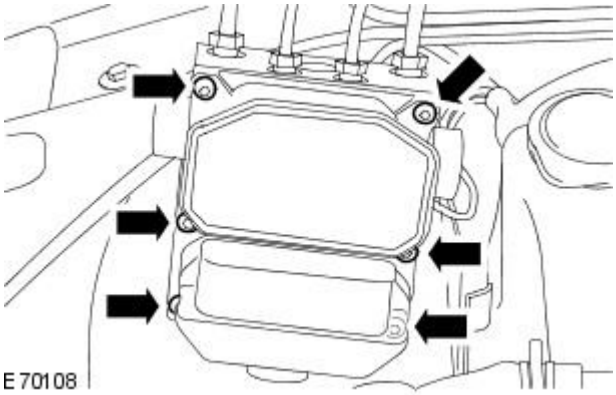

3. Remove the ABS module.

Installation

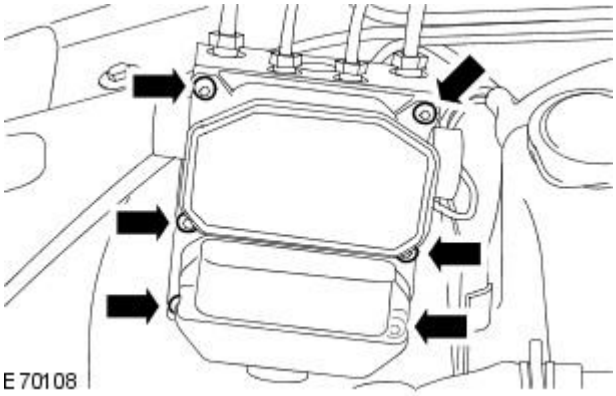

1. NOTE: Install new retaining bolts.

   To install, reverse the removal procedure.

   - Tighten to 3 Nm.

2. Reprogram the ABS module, using the Jaguar approved diagnostic system.

Anti-Lock Control - Stability Assist - Front Wheel Speed Sensor

Removal and Installation

Removal

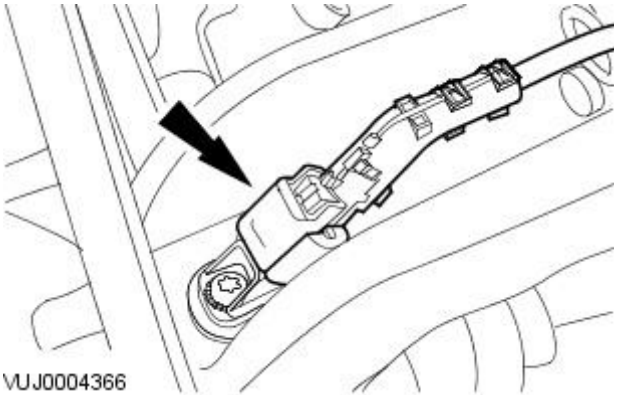

1. Remove the wheel and tire assembly. For additional information, refer toSection 204-04 Wheels and Tires.
2. Disconnect the front wheel speed sensor electrical connector.

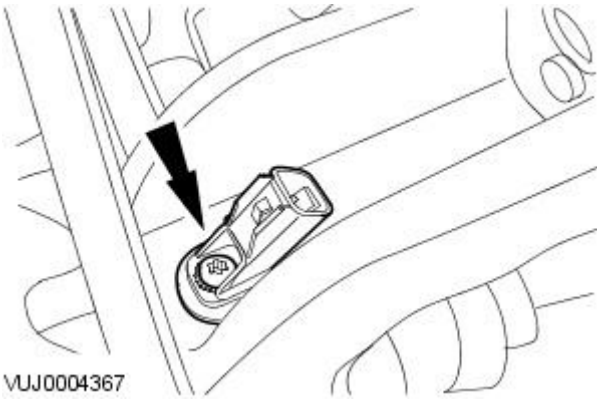

3. Remove the front wheel speed sensor.

Installation

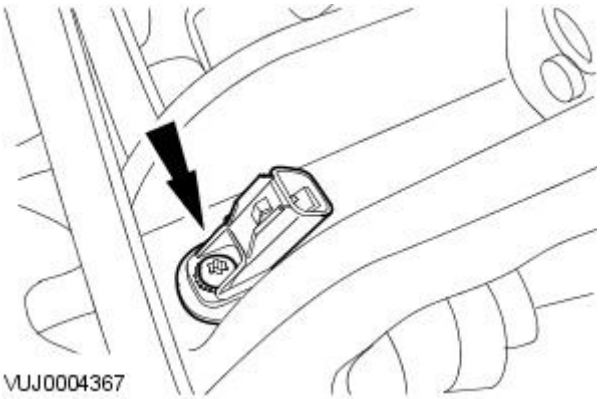

1. To install, reverse the removal procedure.
    1. Tighten to 5 Nm

Anti-Lock Control - Stability Assist - Hydraulic Control Unit (HCU)VIN Range: C00001->J12991

Removal and Installation

Removal

All vehicles

1. Disconnect the battery ground cable.
   For additional information, refer to: Battery Disconnect and Connect (414-01 Battery, Mounting and Cables, General Procedures).
2. Raise and support the vehicle.
   For additional information, refer to: Lifting (100-02 Jacking and Lifting, Description and Operation).
3. Connect a bleed pipe bottle to the caliper bleed nipple and loosen the bleed nipple.
4. Install pedal hold-down tool.
   - Install the tool between the pedal and the seat frame.
   - Turn the tool hand-wheel to depress and hold the pedal 60 mm (2.4 in) from the 'OFF' position
   - This will prevent loss of fluid from the reservoir through disconnected brake pipes.
5. Remove the bleed pipe and bottle.
   - Tighten the caliper bleed nipple.
   - Disconnect and remove the bleed pipe and bottle.
   - Install the bleed nipple dust cap.
6. Disconnect the hydraulic control unit electrical connector.

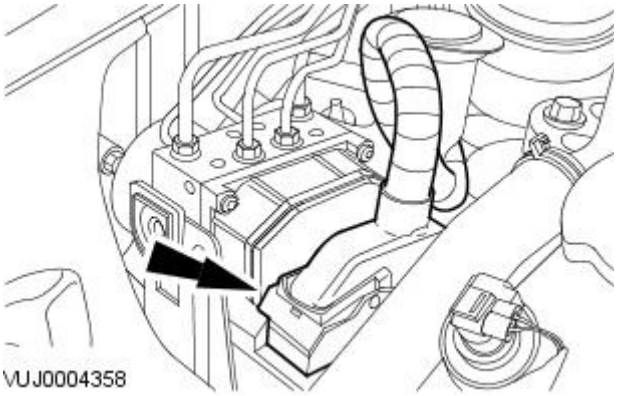

Vehicles with stability assist

7. Disconnect the pressure sensor electrical connector.

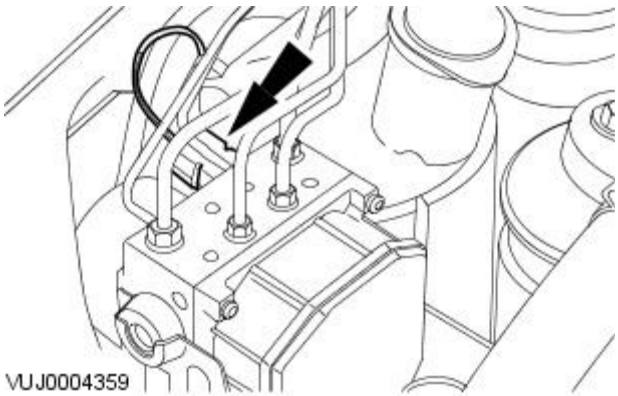

All vehicles

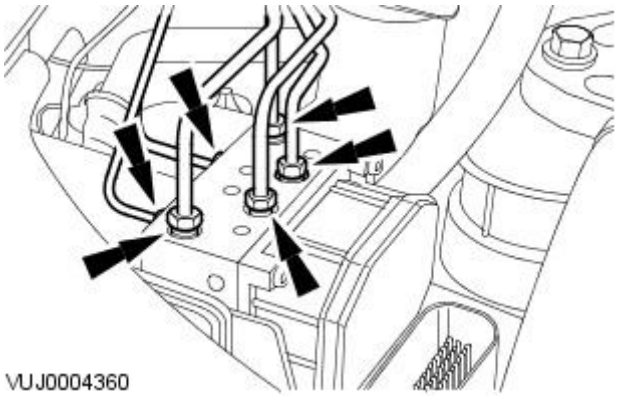

8. CAUTION: If brake fluid is spilt on the paintwork, the effected area must be immediately washed down with cold water.

Disconnect the hydraulic control unit brake tubes.

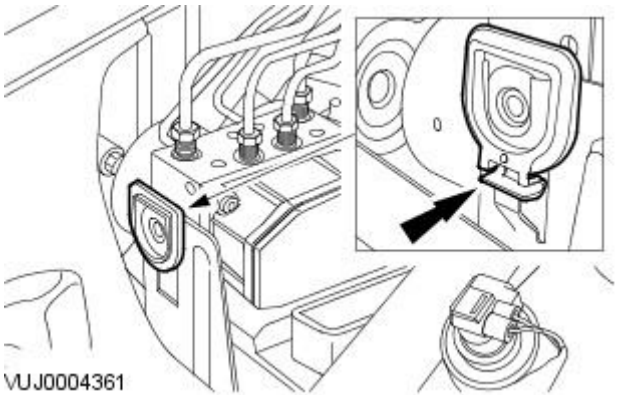

9. Remove the hydraulic control unit.

Installation

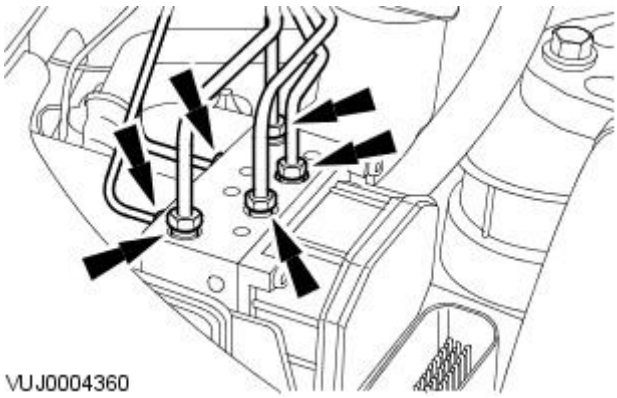

1. To install, reverse the removal procedure.

- Tighten to 17 Nm.

2. Bleed the brake system.
For additional information, refer to: Brake System Bleeding (206-00 Brake System - General Information, General Procedures).

Anti-Lock Control - Stability Assist - Hydraulic Control Unit (HCU)VIN Range: J12992->V99999

Removal and Installation

Special Tool(s)	
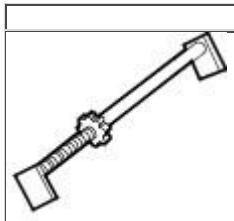 JDS9013	Brake pedal hold-down tool JDS 9013

Removal

1. Disconnect the battery ground cable.
   For additional information, refer to: Battery Disconnect and Connect (414-01 Battery, Mounting and Cables, General Procedures).
2. Raise and support the vehicle.
   For additional information, refer to: Lifting (100-02 Jacking and Lifting, Description and Operation).
3. Connect a bleed pipe bottle to the caliper bleed nipple and loosen the bleed nipple.
4. Install pedal hold-down tool.
   - Install the tool between the pedal and the seat frame.
   - Turn the tool hand-wheel to depress and hold the pedal 60 mm (2.4 in) from the 'OFF' position.
   - This will prevent loss of fluid from the reservoir through disconnected brake pipes.
5. Remove the bleed pipe and bottle.
   - Tighten the caliper bleed nipple.
   - Disconnect and remove the bleed pipe and bottle.
   - Install the bleed nipple dust cap.
6. Disconnect the hydraulic control unit (HCU) electrical connector.

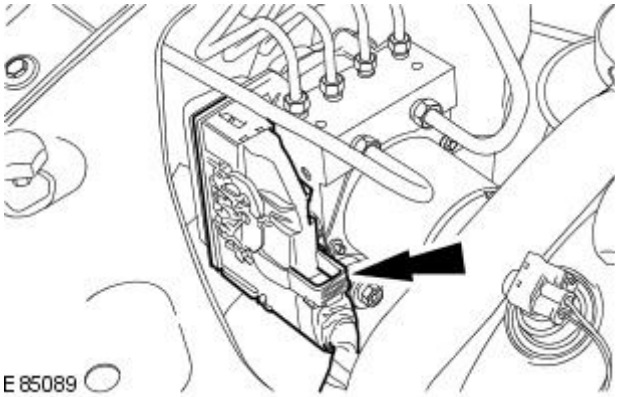

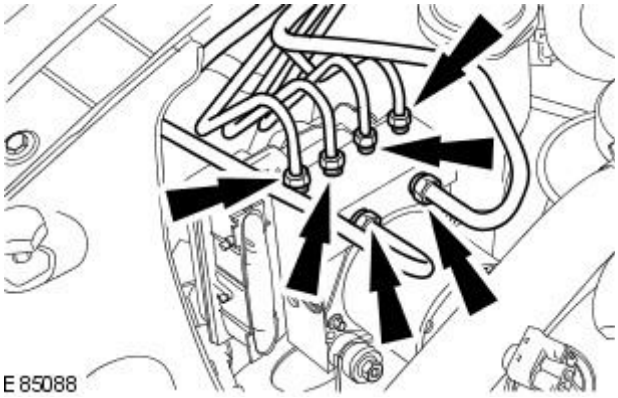

7. WARNING: Brake fluid contains polyglycol ethers and polyglycols. Avoid contact with the eyes. Wash hands thoroughly after handling, as prolonged contact may cause irritation and dermatitis. If brake fluid contacts the eyes, flush the eyes with cold water or eyewash solution and seek medical attention. If taken internally do not induce vomiting, seek immediate medical attention. Failure to follow these instructions may result in personal injury.

• CAUTIONS:

If brake fluid is spilt on the paintwork, the effected area must be immediately washed down with cold water.

Cap the exposed brake tubes and ports to prevent loss of fluid and dirt ingress. Failure to follow this instruction may result in damage to the vehicle.

Disconnect the HCU brake tubes.

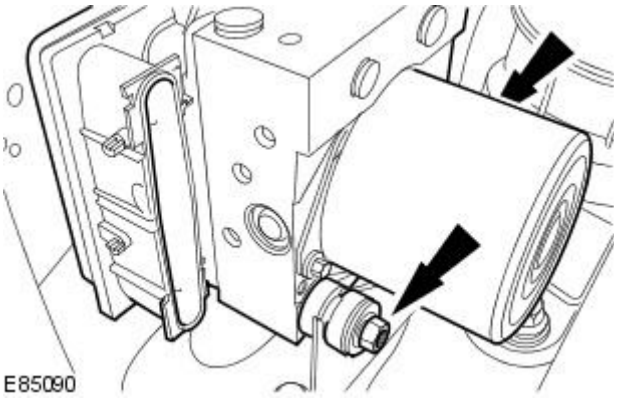

8. Remove the HCU.

Installation

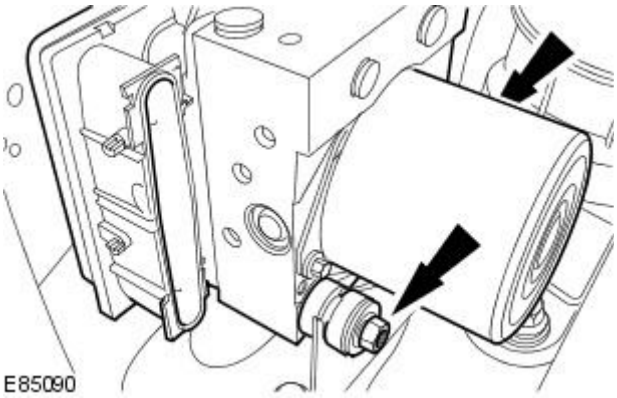

1. To install, reverse the removal procedure.

- Tighten to 8 Nm.

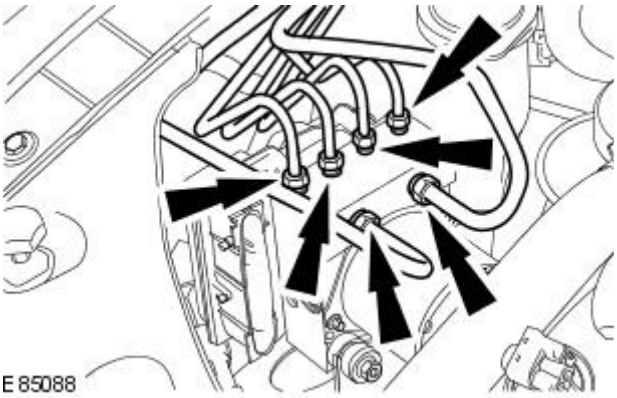

2. CAUTION: Make sure the brake tubes are installed to the correct ports. Failure to follow this instruction may result in damage to the vehicle.

Tighten to 16 Nm.

3. Bleed the anti-lock brake system (ABS).
For additional information, refer to: Brake System Bleeding (206-00 Brake System - General Information, General Procedures).

Anti-Lock Control - Stability Assist - Rear Wheel Speed Sensor

Removal and Installation

Removal

Vehicles with 2.5L or 3.0L engine

1. Remove the rear seat cushion.
   For additional information, refer to: Rear Seat Cushion (501-10 Seating, Disassembly and Assembly).
2. Disconnect the rear ABS wheel speed sensor electrical connector.

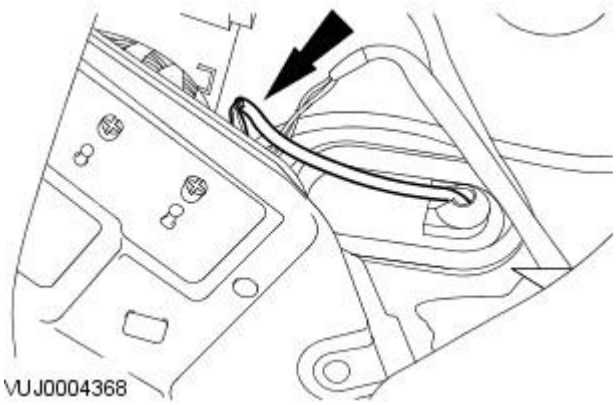

3. Detach the grommet.

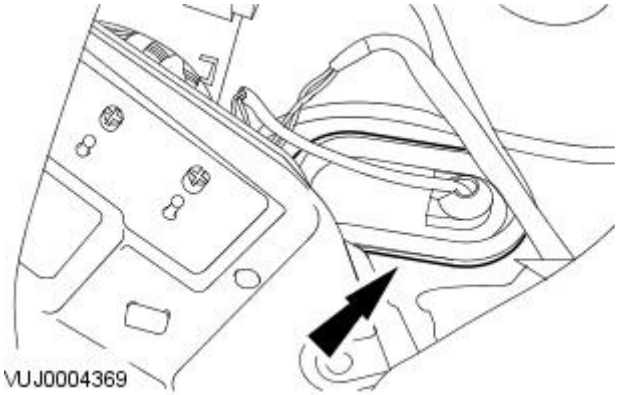

4. Raise and support the vehicle.
   For additional information, refer to: Lifting (100-02 Jacking and Lifting, Description and Operation).
5. Detach the ABS wheel speed sensor wiring harness.

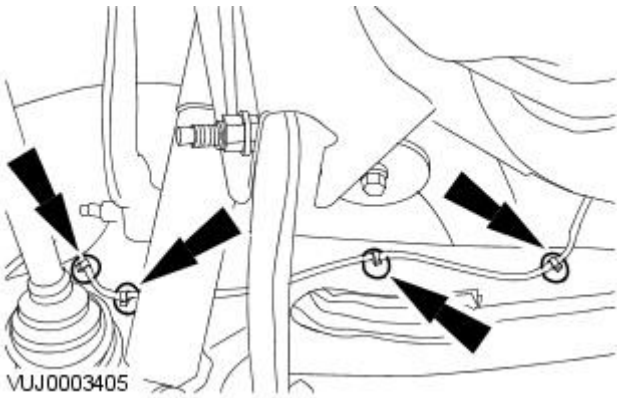

6. Remove the ABS wheel speed sensor.

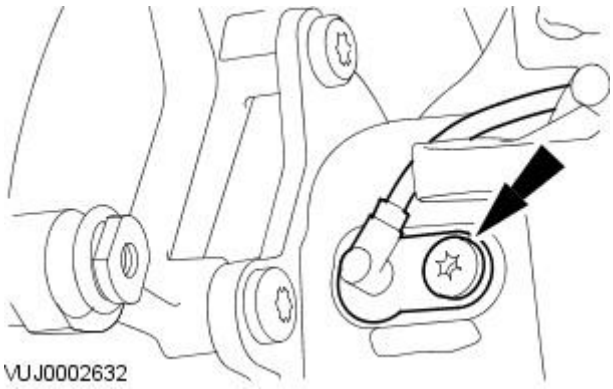

Vehicles with 2.0L or diesel engine

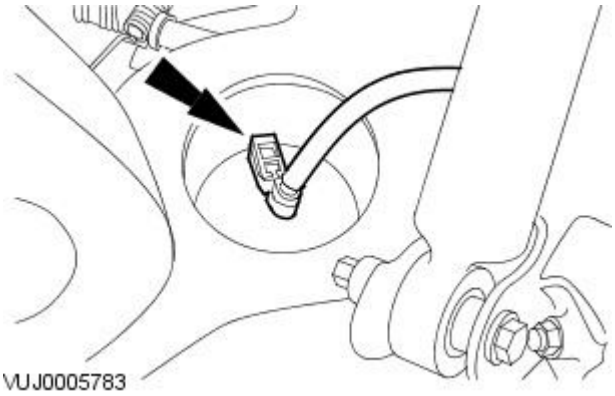

7. Disconnect the ABS wheel speed sensor electrical connector.

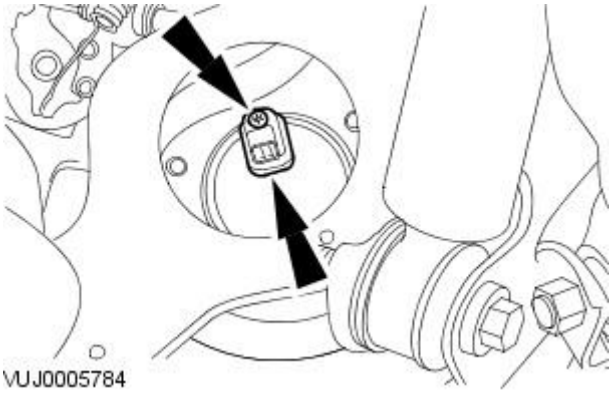

8. Remove the ABS wheel speed sensor.

Installation

Vehicles with 2.5L or 3.0L engine

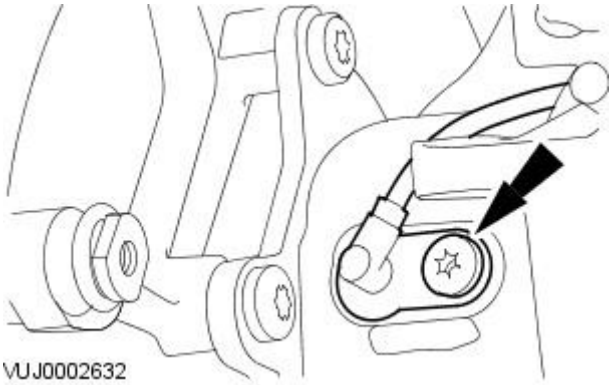

1. To install, reverse the removal procedure.

1. Tighten to 22 Nm.

Vehicles with 2.0L or diesel engine

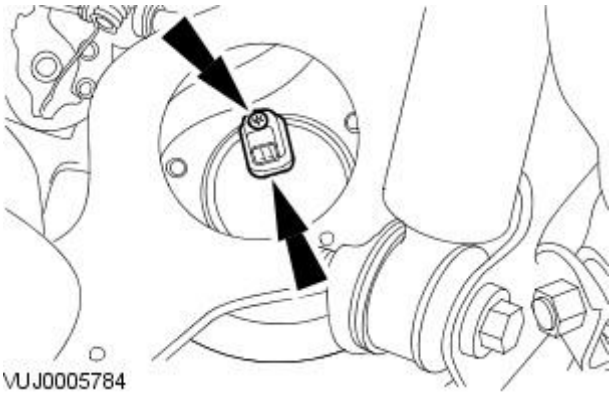

2. To install reverse the removal procudure.

1. Tighten to 7 Nm.

Anti-Lock Control - Stability Assist - Stability Assist Module

Removal and Installation

Removal

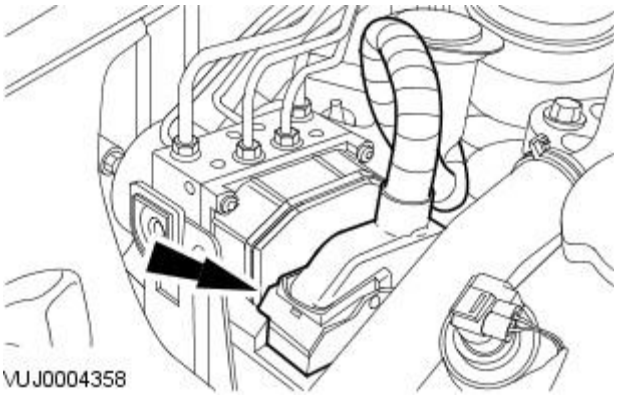

1. NOTE: Stability assist module is an integral component of the ABS module and cannot be separated.

Disconnect the anti-lock brake system (ABS) module electrical connector.

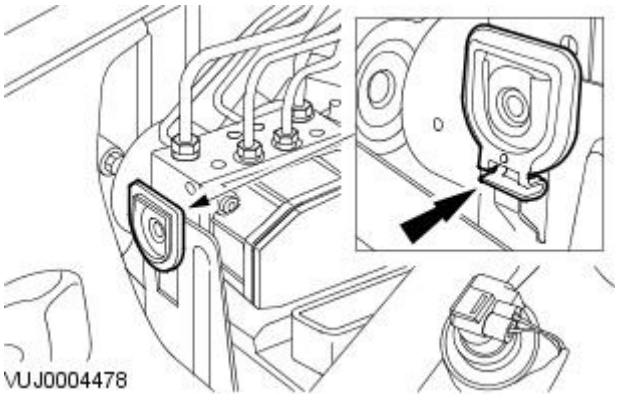

2. Detach the hydraulic control unit (HCU).

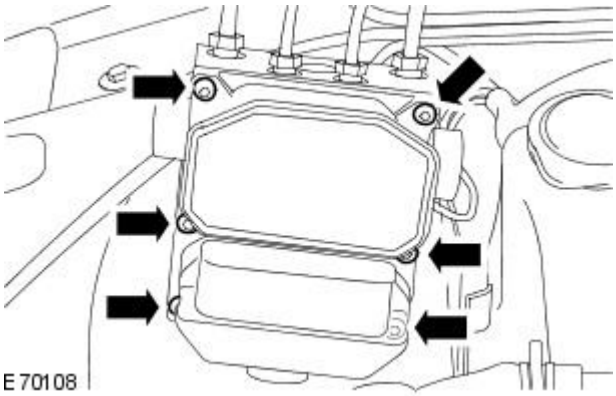

3. Remove the ABS module.

Installation

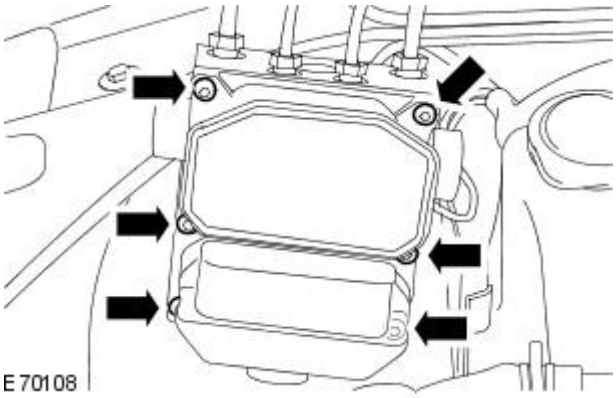

1. NOTE: Install new retaining bolts.

To install, reverse the removal procedure.

- Tighten to 3 Nm.

2. Reprogram the ABS module, using the Jaguar approved diagnostic system.

Anti-Lock Control - Stability Assist - Steering Wheel Rotation Sensor

Removal and Installation

Removal

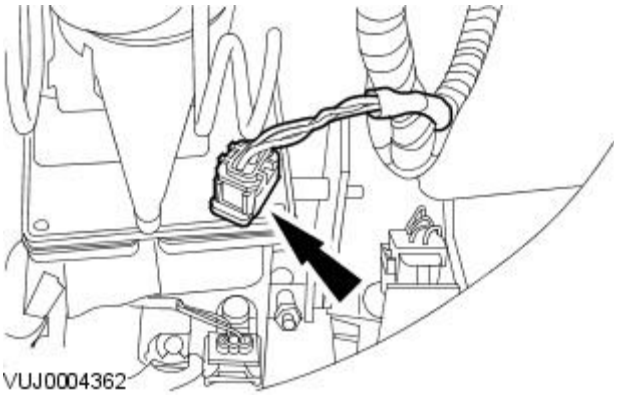

1. Disconnect the steering wheel rotation sensor electrical connector.

2. Remove the upper steering column.
   For additional information, refer to: Steering Column.
3. Remove the steering wheel rotation sensor.

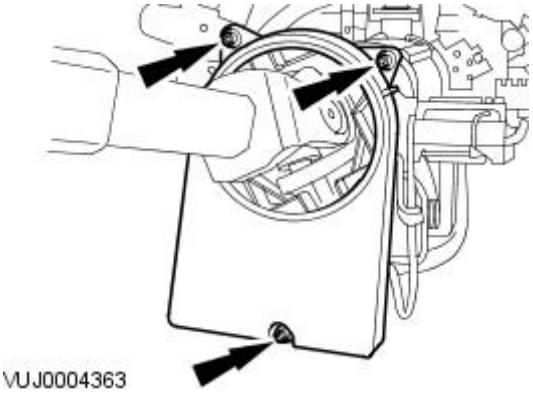

Installation

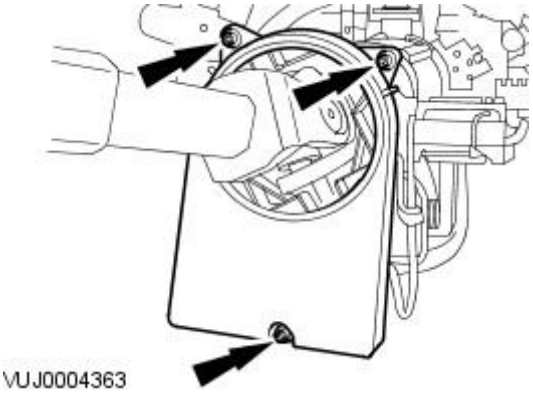

1. To install, reverse the removal procedure.
   - Tighten to 1 Nm.

2. Calibrate the steering wheel angle sensor using the Jaguar approved diagnostic system.

Anti-Lock Control - Stability Assist - Yaw Rate Sensor2.0L Duratorq-TDCi / 2.0L NA V6 - AJV6 / 2.5L NA V6 - AJV6 / 3.0L NA V6 - AJ27

Removal and Installation

Removal

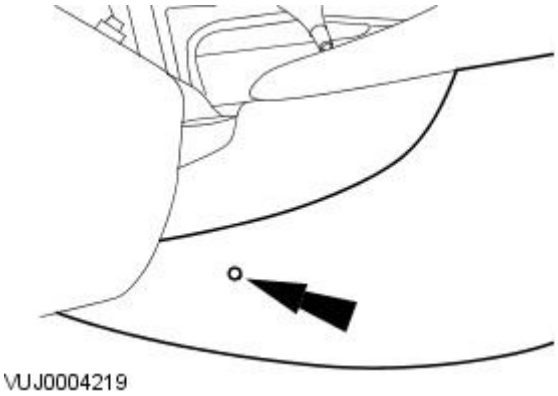

1. Remove the floor console trim panel.

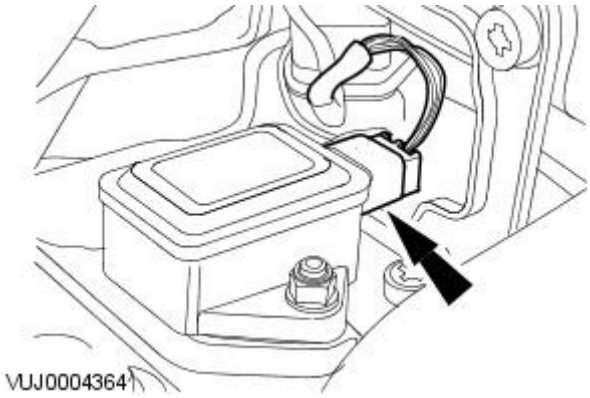

2. Disconnect the yaw rate sensor electrical connector.

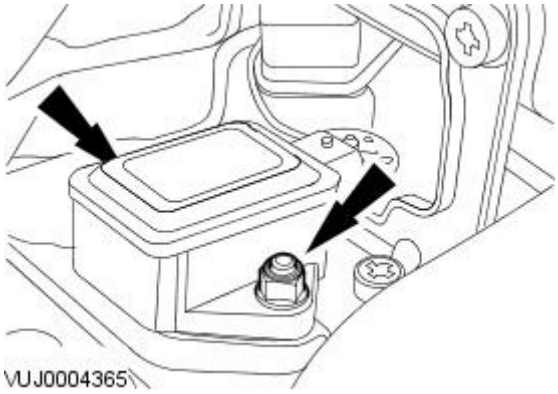

3. WARNING: Note the correct orientation of the yaw rate sensor.

Remove the yaw rate sensor.

Installation

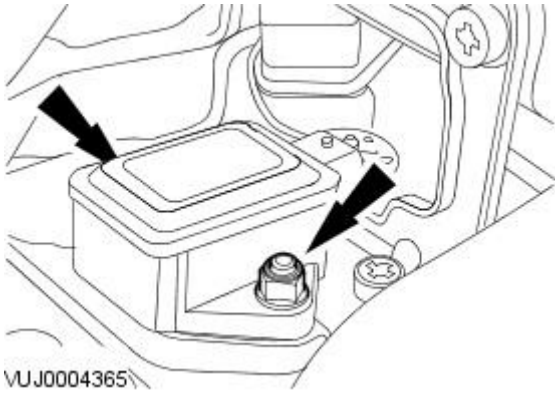

1. WARNING: Make sure the yaw rate sensor is correctly installed.

To install, reverse the removal procedure.

- Tighten to 6 Nm.

Anti-Lock Control - Stability Assist - Yaw Rate Sensor2.2L Duratorq-TDCi (110kW/150PS) - Puma

Removal and Installation

Removal

Vehicles with automatic transmission

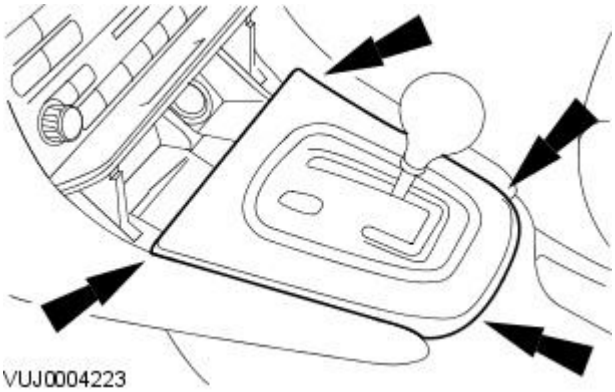

1. Detach the J-gate surround.

Vehicles with manual transmission

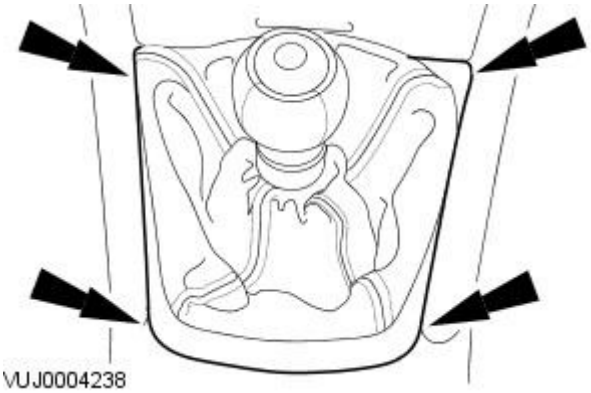

2. Detach the gear selector surround.

All vehicles

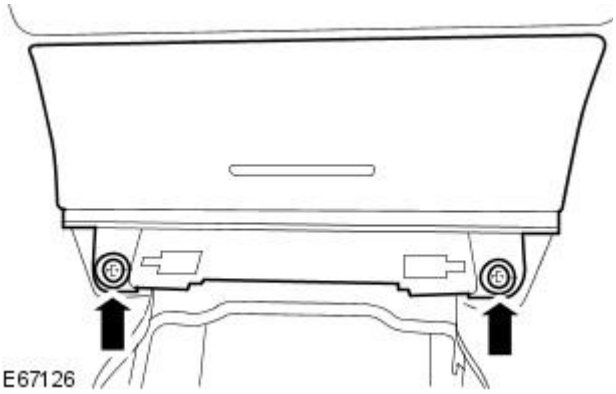

3. Detach the ash tray.

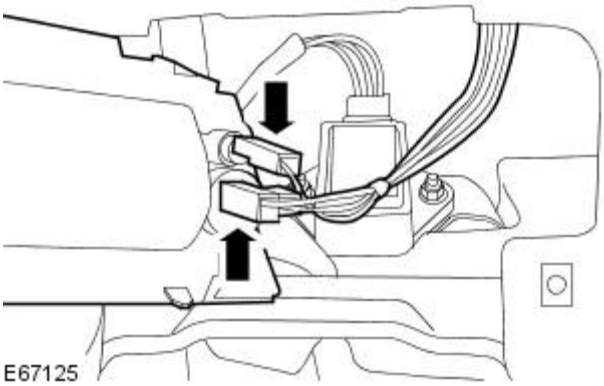

4. Remove the ash tray.

- Disconnect the electrical connectors.

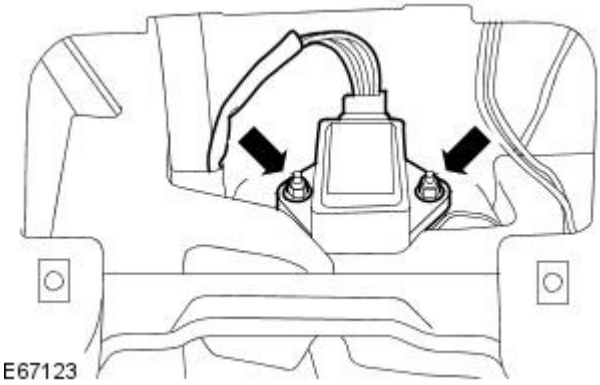

5. CAUTION: Make sure the yaw rate sensor is not subjected to any form of impact and is not dropped or damaged. Failure to follow this instruction may result in failure of the sensor.

Detach the yaw rate sensor.

- Remove the retaining nuts.

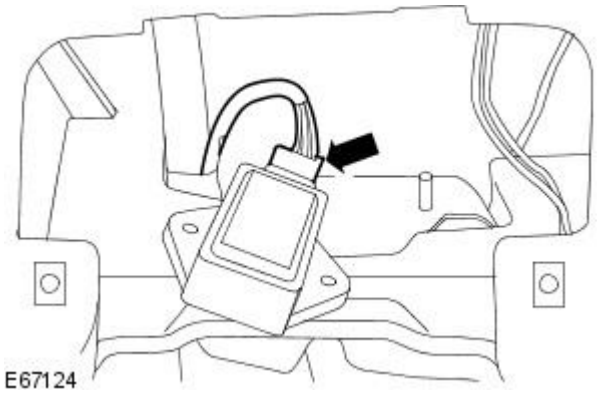

6. Remove the yaw rate sensor.

- Disconnect the electrical connector.

Installation

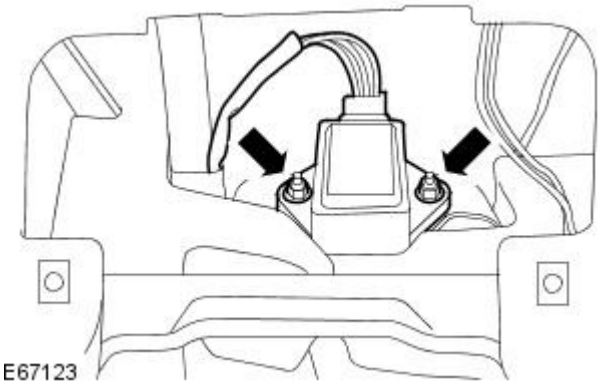

1. CAUTION: Make sure the yaw rate sensor is not subjected to any form of impact and is not dropped or damaged. Failure to follow this instruction may result in failure of the sensor.

To install, reverse the removal procedure.

- Tighten to 6 Nm.

Published: 20-Jul-2011

Steering System - General Information -

Steering Linkage Specifications

Steering Linkage Free Play	Measurement (mm)	Measurement (in)
Free play (measured at the steering wheel rim)	0-6	0-0.24

Power Steering Pump Specifications

Item	Specification
Power steering pump relief pressure	106-114 bar

Lubricants, Fluids, Sealers and Adhesives

Item	Specification
Power steering fluid	Dexron 3

Steering System - General Information - Steering System

Description and Operation

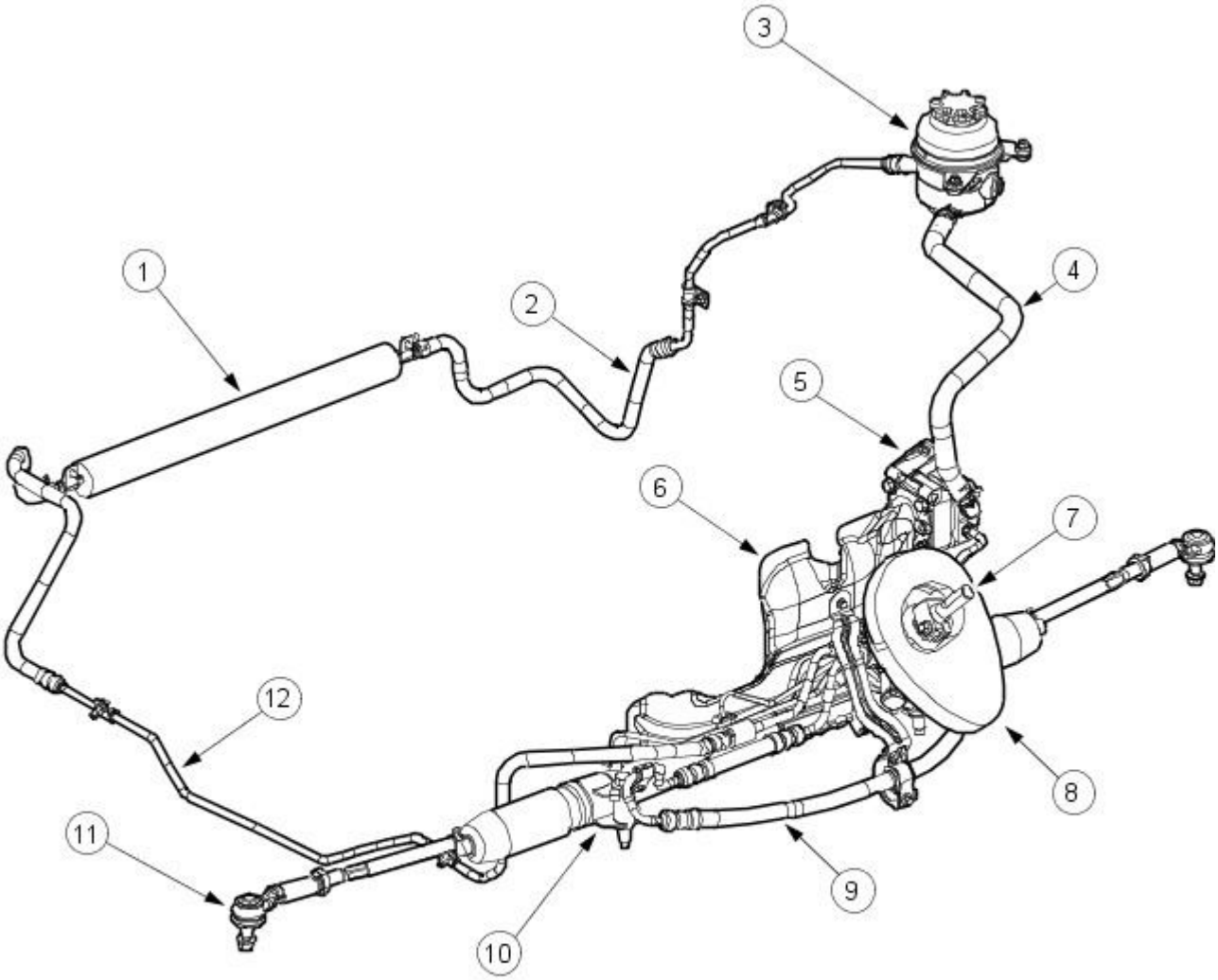

VUJ0003736

Item	Part Number	Description
1	—	Fluid cooler
2	—	Low pressure pipe - fluid cooler to reservoir
3	—	Fluid reservoir
4	—	Power steering pump
5	—	Heat shield
6	—	Extension shaft
7	—	Dash panel seal
8	—	High pressure pipe
9	—	Steering gear
10	—	Tie-rod end
11	—	Low pressure pipe - steering gear to fluid cooler

Vehicles with 2.0L or diesel engines

The power steering system is a rack and pinion design, with an engine-driven pump providing the steering assistance.

Vehicles with 2.5L or 3.0L engines

The power steering system is a rack and pinion design, with an engine-driven pump providing the steering assistance. The system features variable steering assistance with vehicle speed and a variable ratio steering rack.

Absolute cleanliness must be observed when replenishing the fluid or dismantling any part of the system. New fluid from a sealed container must be used.

• NOTE: If the steering gear, pump or cooler are being replaced for leakage or noise related issues and there is no evidence of fluid contamination, there is no need to replace the reservoir.

In some cases where the fluid clearly contains particulate matter, and the system continues to function, flush the system with fresh fluid and replace the reservoir, as there is the possibility that the reservoir internal filter may be damaged or faulty.

Steering System - General Information - Steering System

Diagnosis and Testing

Inspection and Verification

1. **1.** Verify the customer concern by driving the vehicle.
2. **2.** Visually inspect for obvious signs of mechanical or electrical damage.

Mechanical Inspection Chart

Mechanical Checks
• Incorrect tire pressure, loose wheel nuts, incorrect wheel alignment • Loose tie-rods • Loose damper and spring assemblies or ball joint • Loose steering column shaft universal joints • Loose pinch bolts on steering column shaft • Loose steering gear assembly • Check for external damage to the steering gear. - Damaged tie-rods - CAUTION: If a steering gear assembly is returned under warranty with leaking seals, but there is also damage to the steering gear boot/boots the steering gear warranty will be invalid. This is due to the steering gear seals being damaged due to foreign materials entering the steering gear boot and damaging the steering gear seals thereafter. Damaged steering gear boot • Damaged accessory drive belt • Binding or misaligned steering column, pump or steering gear • Incorrect fluid level • Hose leaks or line restrictions • Hose fouling bodywork

Electrical Inspection Chart

Electrical Checks/Tests
• Make sure all connectors are in place (steering gear Servotronic solenoid and steering control module (SCM) - if applicable) • Make sure all the fuses are in place and not blown • DISCONNECT the steering gear transducer and the steering should become heavy • TEST electrical values: - Power Supply to the SCM = 12 Volts - Steering gear transducer resistance 7.0 to 7.5 Ohms is normal (limits: less than 5 Ohms and greater than 9 Ohms would be declared unacceptable) - Steering gear transducer voltage = 6 Volts - Steering gear transducer current = 840 mA at 0 mph reducing to 0 mA at maximum speed • RECONNECT all electrical items disturbed during testing

3. **3.** If an obvious cause for an observed or reported concern is found, correct the cause (if possible) before proceeding to the next step.
4. **4.** Check the power steering fluid condition. For additional information, REFER to Power Steering Fluid Condition Check in this section.
5. **5.** If the concern is not visually evident, verify the symptom and REFER to Steering Fault Diagnosis by Symptom Charts in this section.

Steering Relay Harness Connector

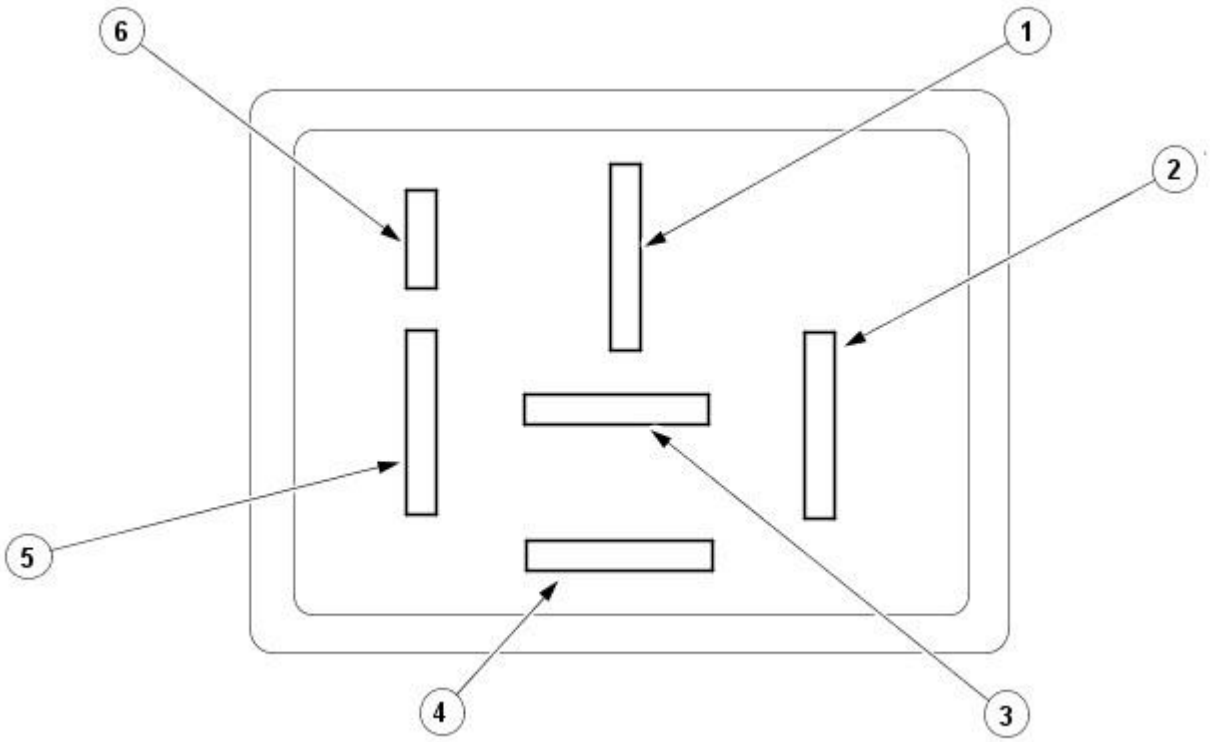

E39815

Item	Description
1	Steering transducer ground
2	Ignition feed
3	Steering transducer feed
4	Ground
5	Speed sensor signal
6	Serial interface

Steering Linkage Inspection and Backlash (Freeplay) Check

CAUTION: Steering gear boots must be handled carefully to avoid damage. Use new clamps when installing steering gear boots.

Inspect the boots for cuts, deterioration, twisting or distortion. Check the steering gear boots to make sure they are tight. Install new boots or clamps as necessary.

• NOTE: The following steps must be carried out with assistance.

1. **1.** With the wheels in the straight ahead position, gently turn the steering wheel to the left and the right to check for free play.
2. **2.** Free play should be between 0 and 6 mm (0 and 0.24 in) at the steering wheel rim. If the free play exceeds this limit, either the ball joints are worn, the lower steering column joints are worn or the backlash of the steering gear is excessive.

CAUTION: DO NOT attempt to adjust the steering gear yoke. Failure to follow this instruction will result in the steering gear warranty to become invalid.

3. **3.** The backlash of the steering gear cannot be adjusted, install a new steering gear. For additional information, REFER to Section 211-02 Power Steering.
4. **4.** Grasp the steering wheel firmly and move it up and down and to the left and right without turning the wheel to check for column bearing wear, steering wheel or steering column. For additional information, REFER to Section 211-04 Steering Column.

Power Steering Fluid Condition Check

1. **1.** Run the engine for 2 minutes.
2. **2.** Check the power steering fluid system level.
3. **3.** Observe the color and the odor. The color under normal circumstances should be dark reddish, not brown or black.
4. **4.** Allow the fluid to drip onto a facial tissue and examine the stain.
5. **5.** If evidence of solid material is found, the power steering fluid system should be drained for further inspection.
6. **6.** If fluid contamination or steering component failure is confirmed by the sediment in the power steering fluid system, REFER to Steering Fault Diagnosis by Symptom Charts in this section.

Power Steering Pressure Test

Test Equipment

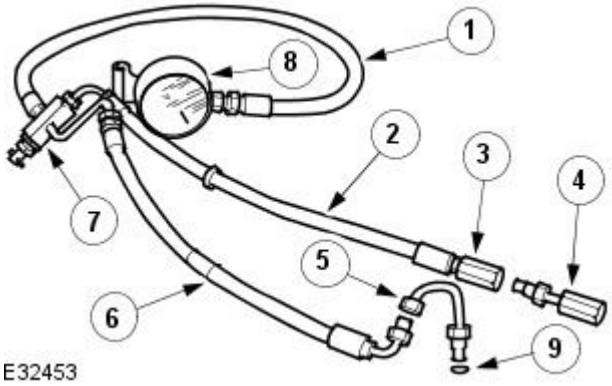

Item	Special Tool Number	Description
1	211-011	Pressure Gauge Hose
2	211-011-08	Pump Return Hose
3	211-011-07	Pump Return Hose Connector
4	211-011-03/2	Test Equipment to High Pressure Hose Adaptor
5	211-011-03/1	Pump High Pressure Outlet to Hose Adaptor
6	211-011-02	Pump Adaptor to Control Valve Hose
7	211-011-01	Control Valve
8	211-011	Pressure Gauge
9	-	'O' Ring Seal

The measurement of the maximum system pressure, (which is governed by the pressure relief valve) is achieved by inserting the Service Tool (pressure gauge and adaptors) into the fluid circuit of the power steering system. Run the engine at idle speed, turn the steering from lock to lock and read the maximum pressure recorded on the gauge.

Installing Test Equipment

To install the pressure test equipment:

- Place a suitable drain tray below the power steering pump.
- Install a hose clamp on the reservoir to pump hose prior to disconnecting any hoses, to avoid unnecessary loss of fluid.
- Disconnect the hose from the power steering pump high pressure outlet.
- Install the pump outlet to hose adaptor (5). Do not omit the 'O' ring seal (9).
- Connect the power steering pump adaptor to control valve hose (6) of the test equipment.
- Install the adaptor (4) in the high pressure hose previously removed from the power steering pump outlet.
- Connect the connector (3) of the test equipment hose (2) to the adaptor (4).
- Remove the hose clamp from the reservoir hose.
- Start the engine.

With the control valve (7) OPEN and the engine idling, the following system pressures may be checked:

- During turning.
- When the steering is held on full lock.
- With the steering at rest.

• CAUTIONS:

To avoid excessive heating of the power steering pump, do not close the valve for longer than 5 seconds maximum.

Do not drive the vehicle with the test equipment installed.

With the control valve (7) CLOSED the power steering pump maximum output pressure can be checked.

Removing Test Equipment

To remove the test equipment:

- Install a hose clamp on the reservoir to power steering pump hose.
- Removing the test equipment is a reversal of the installation instructions.
- Install a new 'O' ring seal (9) to the power steering pump high pressure outlet to hose connection.
- Install the original hose to the power steering pump.
- Remove the clamp from the reservoir to the power steering pump hose.
- Top-up the reservoir fluid.
- Bleed the power steering system. For additional information,
  REFER to Power Steering System Bleeding - in this section.

Steering Fault Diagnosis by Symptom Charts

Leakage

Condition	Possible Sources	Action
• Fluid leakage	Confirm the position of the fluid leak.	• CLEAN the area of the leak. • Inspect the area and confirm the exact position of leak. • Make sure the fluid is not from another system on the vehicle.
	• Overfilled system.	• CORRECT the fluid level as necessary.
	• Component leak.	• NOTE: Record the position of the leak and some indication of the rate of the leak on the Warranty Return Record Sheet. • LOCATE the suspect component or CHECK hose connections and repair as necessary.

Condition	Possible Sources	Action
	• Damaged fluid cap.	• INSTALL a new fluid cap.
	• Loose or damaged hose fittings.	• TIGHTEN or INSTALL a new hose as necessary.
	• Leakage at power steering pump.	• INSTALL a new power steering pump as necessary. For additional information, REFER to Section 211-02 Power Steering.
• Fluid leakage	• Leakage at steering hose to steering gear connection.	• CHECK steering hose to steering gear connection for leakage. CHECK and TIGHTEN the steering hose to steering gear connection retaining bolts/bolts as necessary.
	• Power steering fluid leakage at O-ring seals.	• CHECK the power steering system for signs of steering fluid loss from O-ring seals. • INSTALL new O-ring seals as necessary. • BLEED the power steering system. For additional information, REFER to Section 211-00 Steering System - General Information.
	• Power steering fluid leakage from transfer pipes.	• CHECK the power steering system for signs of steering fluid loss from the transfer pipes. • CHECK and TIGHTEN the transfer pipes if required, INSTALL new transfer pipes as necessary. • BLEED the power steering system. For additional information, REFER to Section 211-00 Steering System - General Information.
	• Power steering fluid leakage from the steering gear.	• CHECK the power steering gear for signs of fluid loss. • INSTALL a new steering gear as necessary. For additional information, REFER to Section 211-02 Power Steering.
	• Power steering fluid leakage from steering gear boot.	• CHECK the power steering gear for signs of fluid loss. • INSTALL a new steering gear as necessary. For additional information, REFER to Section 211-02 Power Steering.

Functional

Condition	Possible Sources	Action
• Free play at steering wheel	• Excess play in the steering linkage.	• CHECK the steering linkage for excess play. For additional information, REFER to the Steering Linkage Inspection and Backlash (Freeplay) Check in this section.
	• Steering wheel loose.	• CHECK and TIGHTEN the steering wheel retaining bolt/bolts as necessary. For additional information, REFER to Section 211-04 Steering Column.
	• Lower steering column pinch bolt loose.	• CHECK and TIGHTEN the lower steering column pinch bolts as necessary. For additional information, REFER to Section 211-04 Steering Column.
	• Excessive wear in lower steering column.	• CHECK for lower steering column for wear in the universal joints. If wear is present, INSTALL a new lower steering column as necessary.
	• Wear in suspension joints.	CAUTION: DO NOT attempt to adjust the steering gear yoke. Failure to follow this instruction will result in the steering gear warranty to become invalid. • CHECK for excess wear in the front suspension joints. For additional information, REFER to Section 204-00 Suspension System - General Information.
• Vehicle wanders from side to side on the road, when the vehicle is driven straight ahead and the steering wheel is held in a firm position	• Incorrect tire pressure or tire size.	• CHECK and ADJUST the tire pressure. For additional information, REFER to Section 204-04 Wheels and Tires. • INSTALL a new tire as necessary. For additional information, REFER to Section 204-04 Wheels and Tires.
	• Vehicle is unevenly or excessively loaded.	• ADJUST the load evenly.
	• Loose/worn tie-rods.	• INSTALL a new tie-rod end. For additional information, REFER to Section 211-03 Steering Linkage.
	• Steering gear bolts loose or damaged.	• TIGHTEN or INSTALL new bolts.
	• Loose or worn suspension ball joint(s).	• INSTALL a new suspension ball joint assembly. For additional information, REFER to Section 204-01 Front Suspension.
	• Steering column universal joint pinch bolt loose.	• TIGHTEN the steering column universal joint pinch bolt. For additional information, REFER to Section 211-04 Steering Column.
	• Incorrect toe adjustment.	• ADJUST as necessary. For additional information, REFER to Section 204-00 Suspension System - General Information.

Condition	Possible Sources	Action
	• Loose or worn rear suspension.	• TIGHTEN loose, or INSTALL new rear suspension components. For additional information, REFER to Section 204-02 Rear Suspension.
• Vehicle tends to pull to one side when driven on a level surface	• Incorrect tire pressure. • Incorrect tire size or different tire/tread type. • Uneven tire wear	• CHECK and ADJUST the tire pressure. For additional information, REFER to Section 204-04 Wheels and Tires. • INSTALL a new tire as necessary. For additional information, REFER to Section 204-04 Wheels and Tires.
	• Vehicle is unevenly loaded or overloaded.	• Adjust the load.
	• Incorrect toe adjustment.	• ADJUST as necessary. For additional information, REFER to Section 204-00 Suspension System - General Information.
	• Damaged front suspension components.	• INSTALL new front suspension components as necessary. For additional information, REFER to Section 204-01 Front Suspension.
	• Damaged rear suspension components.	• INSTALL new rear suspension components as necessary. For additional information, REFER to Section 204-02 Rear Suspension.
	• Steering gear valve effort out of balance.	• SHIFT the transmission into NEUTRAL while driving at no more than 30 miles/hour (50 km/h) and turn the ignition to position I (engine OFF-coasting). If the vehicle does not pull with the engine off, INSTALL a new steering gear. For additional information, REFER to Section 211-02 Power Steering. • If the vehicle does drift with the engine off, CROSS SWITCH front wheel assemblies. • If the vehicle pulls to the opposite side, SWITCH wheels that were on the rear to the same side on the front. • If the vehicle pull direction is not changed, CHECK the front suspension components and toe adjustments. For additional information, REFER to Section 204-01 Front Suspension.
	• Check the front and rear brakes for correct operation.	• ADJUST as necessary. For additional information, REFER to Section 206-00 Brake System - General Information.
	• Check for bent rear suspension components and for damaged coil springs in the front suspension.	• INSTALL new rear suspension components as necessary. For additional information, REFER to Section 204-02 Rear Suspension. • INSTALL new front suspension components as necessary. For additional information, REFER to Section 204-01 Front Suspension.
	• Check the rear suspension for loose or worn suspension components.	• TIGHTEN or INSTALL new components as necessary. For additional information, REFER to Section 204-02 Rear Suspension.
	• Incorrect underbody alignment.	• CHECK underbody alignment. For additional information, REFER to Section 502-00 Uni-Body, Subframe and Mounting System.
• Poor returnability of the steering	• Lower steering column interference.	• CHECK the steering column is free from interference from the engine harness, sound proofing or the floor covering.
	• Incorrect tire pressure.	• CHECK and ADJUST the tire pressure. For additional information, REFER to Section 204-04 Wheels and Tires.
	• Incorrect tire size or type.	• INSTALL a new tire as necessary. For additional information, REFER to Section 204-04 Wheels and Tires.
	• Steering column upper shroud fouling on the steering wheel.	• CHECK steering column upper shroud for fouling. ADJUST as necessary.
	• Steering column universal joints binding.	• INSTALL a new steering column. For additional information, REFER to Section 211-04 Steering Column.
	• Steering column shaft floor seal binding.	• CHECK the steering column shaft floor seal for correct fitment and REFIT as necessary.
	• Steering column shaft floor seal may be torn.	• INSTALL a new steering column shaft floor seal as necessary.
	• Binding or damaged tie-rods.	• CHECK tie-rod end for excessive wear or tightness in ball joint. INSTALL a new tie-rod end. For additional information, REFER to Section 211-03 Steering Linkage.

Condition	Possible Sources	Action
	• Damaged or worn front suspension components.	• INSTALL new front suspension components as necessary. For additional information, REFER to Section 204-01 Front Suspension.
	• Incorrect toe adjustment.	• ADJUST as necessary. For additional information, REFER to Section 204-00 Suspension System - General Information.
• Excessive steering efforts required during low speed manoeuvring and/or during parking manoeuvres	• Low power steering fluid.	• CHECK steering system for signs of steering fluid loss. • BLEED the power steering system. For additional information, REFER to Section 211-00 Steering System - General Information.
	• Damaged accessory drive belt tensioner.	• INSTALL a new accessory drive belt tensioner.
	• Hose or cooler line restriction.	• CHECK hose or cooler lines for correct routing. • INSTALL a new hose as necessary.
	• Fluid aeration.	• BLEED the system. For additional information, REFER to Power Steering System Bleeding in this section.
	• Steering transducer not closed - no feed voltage.	• CHECK the steering transducer circuit. For additional information, REFER to the wiring diagrams. • Carry out the electrical checks and tests. For additional information, REFER to the Electrical Checks and Tests in this section.
	• Steering transducer not closed - cable fault.	• CHECK the steering transducer circuit. For additional information, REFER to the wiring diagrams. • Carry out the electrical checks and tests. For additional information, REFER to the Electrical Checks and Tests in this section.
	• Steering control module (SCM) defective.	• CHECK the SCM and INSTALL a new SCM as necessary.
	• Power steering fluid delivery pressure or flow too low.	• CHECK the power steering pressure. For additional information, REFER to the Power Steering Pressure Test in this section. • INSTALL a new power steering pump as necessary. For additional information, REFER to Section 211-02 Power Steering.
	• Internal steering gear leakage.	• CHECK the power steering pressure. For additional information, REFER to the Power Steering Pressure Test in this section. • INSTALL a new steering gear as necessary. For additional information, REFER to Section 211-02 Power Steering.
• Steering operation is very heavy when driving, but when stationary manoeuvring is good	• Steering transducer open early.	• CHECK steering transducer and INSTALL a new steering transducer as necessary. • Carry out the electrical checks and tests. For additional information, REFER to the Electrical Checks and Tests in this section.
	• Steering transducer open early, steering control module (SCM) fault.	• CHECK SCM and INSTALL a new SCM as necessary.
	• Steering transducer open early, speedo signal error.	• CHECK speedo circuit. For additional information, REFER to the wiring diagrams.
• Steering operation is very light when driving, but when stationary manoeuvring is good	• Steering transducer not open, (no power steering fluid flow).	• CHECK the power steering fluid condition. For additional information, REFER to the Power Steering Fluid condition check in this section.
	• Steering transducer not open, steering control module (SCM) fault.	• CHECK the SCM and INSTALL a new SCM as necessary. • Carry out the electrical checks and tests. For additional information, REFER to the Electrical Checks and Tests in this section.
	• Steering transducer not open, speedo signal error.	• CHECK the speedo circuit. For additional information, REFER to the wiring diagrams.
	• CHECK the power steering fluid low pressure pipe for restricted flow.	• INSTALL a new power steering fluid low pressure pipe.
• Steering heavy operation during rapid manoeuvring	• Air in power steering system.	• CHECK for an air leak into the power steering system and repair as necessary. • BLEED the power steering system. For additional information, REFER to Power Steering System Bleeding - in this section.

Condition	Possible Sources	Action
	• Fluid loss at the power steering pump shaft seal.	• CHECK the power steering pump for signs of steering fluid loss. • INSTALL a new power steering pump as necessary. For additional information, REFER to Section 211-02 Power Steering.
	• Power steering fluid delivery pressure or flow too low.	• CHECK the power steering pump for signs of steering fluid loss. • CHECK the power steering pressure. For additional information, REFER to the Power Steering Pressure Test in this section. • INSTALL a new power steering pump as necessary. For additional information, REFER to Section 211-02 Power Steering.
• Steering heavy operation in one direction	• Lower steering column interference.	• CHECK the steering column is free from interference from the engine harness, sound proofing or the floor covering.
	• Incorrect steering geometry.	• CHECK the front wheel alignment. For additional information, REFER to Section 204-00 Suspension System - General Information.
	• Faulty rotary valve/seal.	• CHECK the power steering pressure. For additional information, REFER to the Power Steering Pressure Test in this section. • INSTALL a new steering gear as necessary. For additional information, REFER to Section 211-02 Power Steering.
	• Tire fouling on the wheel arch liner.	• CHECK for clearance between the tire and the wheel arch liner. • Remove and refit the wheel arch liner or INSTALL a new wheel arch liner as necessary.
• Steering heavy operation in both directions	• Low power steering fluid.	• CHECK steering system for signs of steering fluid loss. • BLEED the power steering system. For additional information, REFER to Section 211-00 Steering System - General Information.
	• Air in power steering system.	• CHECK the power steering pump for signs of steering fluid loss. • INSTALL a new power steering pump as necessary. For additional information, REFER to Section 211-02 Power Steering.
	• Fluid loss at the power steering pump shaft seal.	• CHECK the power steering pump for signs of steering fluid loss. • INSTALL a new power steering pump as necessary. For additional information, REFER to Section 211-02 Power Steering.
	• Power steering fluid delivery pressure or flow too low.	• CHECK the power steering pump for signs of steering fluid loss. • CHECK the power steering pressure. For additional information, REFER to the Power Steering Pressure Test in this section. • INSTALL a new power steering pump as necessary. For additional information, REFER to Section 211-02 Power Steering.
• Steering operation varies from heavy to light when driving at constant speed	• Lower steering column interference.	• CHECK the steering column is free from interference from the engine harness, sound proofing or the floor covering.
	• Incorrect speedometer signal.	• CHECK the speedo circuit. For additional information, refer to the wiring diagrams.
	• Steering transducer cable/connection faulty or grounded.	• CHECK the steering transducer circuit. For additional information, refer to the wiring diagrams. • Carry out the electrical checks and tests. For additional information, REFER to the Electrical Checks and Tests in this section.
• Steering wheel varies from light to heavy two times per revolution	• Lower steering column interference.	• CHECK the steering column is free from interference from the engine harness, sound proofing or the floor covering.
	• Steering column universal joints binding.	• INSTALL a new steering column. For additional information, REFER to Section 211-04 Steering Column.
	• Seized or damaged steering components.	• CHECK for wear or failure of suspension bushes and ball joints. For additional information, REFER to Section 204-00 Suspension System - General Information.

Noise

Condition	Possible Sources	Action
• Accessory drive belt squeal	• Incorrect accessory drive belt tension or accessory drive belt glazed.	• CHECK accessory drive belt condition and INSTALL a new accessory drive belt as necessary. For additional information, REFER to Section 303-05 Accessory Drive.
• Chirp noise in the steering pump	• Loose or worn accessory drive belt.	• CHECK accessory drive belt condition and INSTALL a new accessory drive belt as necessary. For additional information, REFER to Section 303-05 Accessory Drive.
• Power steering pump noisy	• Low power steering fluid.	• CHECK steering system for signs of steering fluid loss. • BLEED the power steering system. For additional information, REFER to Section 211-00 Steering System - General Information.
	• Power steering pump worn or otherwise defective.	• CHECK for leaks. REPAIR as necessary. • CHECK the power steering pressure. For additional information, REFER to the Power Steering Pressure Test in this section. • INSTALL a new power steering pump as necessary. For additional information, REFER to Section 211-02 Power Steering.
• Whine type noise	• Aerated fluid.	• BLEED the power steering system. For additional information, REFER to Power Steering System Bleeding - in this section.
	• Power steering pump.	• CHECK for leaks. REPAIR as necessary. • INSTALL a new power steering pump as necessary. For additional information, REFER to Section 211-02 Power Steering.
• Noise during steering gear movement	• Low power steering fluid.	• CHECK steering system for signs of steering fluid loss. • BLEED the power steering system. For additional information, REFER to Section 211-00 Steering System - General Information.
	• Water contamination to the power steering fluid.	• DRAIN the power steering system. • BLEED the power steering system. For additional information, REFER to Section 211-00 Steering System - General Information.
	• Cavitation due to restricted power steering feed hose.	• CHECK and reposition power steering feed hoses and INSTALL new hoses as necessary.
• Continuous noise	• Low power steering fluid.	• CHECK steering system for signs of steering fluid loss. • BLEED the power steering system. For additional information, REFER to Section 211-00 Steering System - General Information.
	• Power steering pump drive loose.	• CHECK power steering coupling and power steering pump. • INSTALL a new power steering coupling or power steering pump as necessary. For additional information, REFER to Section 211-02 Power Steering.
	• Incorrect accessory drive belt tension or accessory drive belt glazed.	• CHECK accessory drive belt condition and INSTALL a new accessory drive belt as necessary. For additional information, REFER to Section 303-05 Accessory Drive.
	• Power steering pump drive pulley loose.	• CHECK and TIGHTEN the power steering pump drive pulley retaining bolts as necessary. For additional information, REFER to Section 303-03A Engine Cooling / 303-03B Engine Cooling.
	• Power steering pump retaining bolts loose.	• CHECK the power steering pump retaining bolts and TIGHTEN as necessary.
	• Power steering hose/pipe in contact with the vehicles body.	• CHECK and reposition power steering hoses/pipes, INSTALL new hoses/pipes as necessary.
	• Power steering hose restricted/twisted.	• CHECK and reposition power steering hose, replace hose as necessary.

Vibration

Condition	Possible Sources	Action
• Feedback (knocking noises in the steering gear) - condition where roughness is felt in the steering wheel by the driver when the vehicle is driven over rough surfaces	• Loose/worn tie-rods.	• INSTALL a new tie-rod end. For additional information, REFER to Section 211-03 Steering Linkage.
	• Steering gear retaining bolts loose or damaged.	CAUTION: DO NOT attempt to adjust the steering gear yoke. Failure to follow this instruction will result in the steering gear warranty to become invalid. • CHECK and TIGHTEN the steering gear retaining bolts. • INSTALL new retaining bolts as necessary. For additional information, REFER to Section 211-02 Power Steering.
	• Loose suspension bushing, bolts or ball joints.	• TIGHTEN or INSTALL new components as necessary. For additional information, REFER to Section 204-01 Front Suspension.
	• Steering column retaining bolts loose.	CAUTION: DO NOT attempt to adjust the steering gear yoke. Failure to follow this instruction will result in the steering gear warranty to become invalid.

Condition	Possible Sources	Action
		• CHECK and TIGHTEN the steering column retaining bolts/nuts and pinch bolts if required. For additional information, REFER to Section 211-04 Steering Column.
	• Excessive wear in steering column assembly.	• CHECK for steering column for wear in the universal joints and bearings. If wear is present, INSTALL a new steering column as necessary. For additional information, REFER to Section 211-04 Steering Column.
• Nibble (Shimmy) Oscillation of the steering wheel (not vertical which is SHAKE). This is driven by road wheel imbalance.	• Road wheel imbalance.	• CHECK for road wheel imbalance. • CHECK for relevant SERVICE BULLETINS/SERVICE ACTIONS for the vehicle on Jaguar Communications Online (JCOL) or in hard copy form.
	• Steering wheel replacement.	• CHECK for relevant SERVICE BULLETINS/SERVICE ACTIONS for the vehicle on Jaguar Communications Online (JCOL) or in hard copy form.
	• Rack replacement.	• CHECK for relevant SERVICE BULLETINS/SERVICE ACTIONS for the vehicle on Jaguar Communications Online (JCOL) or in hard copy form.

Description of General Steering System Noises

Boom

Rhythmic sound like a drum roll or distant thunder. May cause pressure on the ear drum.

Buzz

Low-pitched sound, like a bee. Usually associated with vibrations.

Chatter

Rapidly repeating metallic sound.

Chuckle

Rapid noise that sounds like a stick against the spokes of a spinning bicycle wheel.

Chirp

High pitched rapidly repeating sound, like chirping birds.

Click

Light sound, like a ball point pen being clicked.

Click / Thump

Heavy metal-to-metal sound, like a hammer striking steel.

Grind

Abrasive sound, like a grinding wheel or sandpaper rubbing against wood.

Groan / Moan

Continuous, low-pitched humming sound.

Groan / Howl

Low, guttural sound, like an angry dog.

Hiss

Continuous sound like air escaping from a tire valve.

Hum

Continuous sound of varying frequencies, like a wire humming in the wind.

Knock

Heavy, loud repeating sound like a knock on a door.

Ping

Similar to knock, except at higher frequency.

Rattle

A sound suggesting looseness, such as marbles rolling around in a can.

Roar

Deep, long, prolonged sound like an animal, or winds and ocean waves.

Rumble

Low, heavy continuous sound like that made by wagons or thunder.

Scrape

Grating noise like one hard plastic rubbing part rubbing against another.

Squeak

High-pitched sound like rubbing a clean window.

Squeal

Continuous, high-pitched sound like running finger nails across a chalkboard.

Tap

Light, hammering sound like tapping pencil on edge of table. May be rhythmic or intermittent.

Weep

Continuous mid-range sound (lower frequency than squeal, higher frequency than groan).

Whir/Whine

High-pitched buzzing sound, like an electric motor or drill.

Whistle

Sharp, shrill sound, like wind passing a small opening.

Description of Specific Steering System Noise Types

Belt Squeal

Belt squeal is a high frequency air-borne noise generated by slippage of the ribbed Vee belt on the power steering pump pulley. Squeal increases with system loading and at the end of lock.

Clonk

Clonk is a structure-borne noise heard as a loose-sounding rattle or vibration coming from the steering column. Clonk can be identified by driving and turning over cobblestones, rough roads, or high frequency bumps such as 25-50 mm tall tar strips. Clonk requires a tie-rod load impact.

Column Knock

Column knock is a loose-sounding rattle or vibration generated by the steering column shaft contacting other portions of the column assembly. The noise is both audible and tactile. Column knock is generated by driving over cobblestones or rough pavement. It is not necessary to turn the steering wheel to create this noise.

Column Rattle

Column rattle is a metallic sounding noise created when applying a highly impulsive force to the steering wheel. Column rattle is often used to combine the more general group of column noises including clonk and column knock. Column rattle noises can be caused by clonk, knock, loose column components, bonus parts etc. A series of parked, straight-line driving, and cornering test should be carried out to isolate the source/sources.

Grinding/Scrape

Grinding is a low frequency noise in the column when the steering wheel is turned. Is generally caused by interference between moving components such as the steering wheel to steering column shroud.

Grunt (Squawk)

Grunt is a "honking" sound elicited when coming off one of the steering stops. Grunt is generally excited during parking manoeuvres with a low to medium speed steering input.

Hiss (Swish)

Hiss or Valve Hiss is a high-frequency sound coming from the steering gear when the system is loaded. It is a rushing or "swish" noise that doesn't change frequency with RPM. Hiss is the general noise generated by the flow of hydraulic fluid through restrictions in the steering system. Restrictions include the rotary steering valve, power steering tubes, connectors, tuning orifices, etc. Hiss can be air-borne and structure-borne, but the structure-borne path through the steering intermediate shaft is usually dominant.

Moan (Groan)

Moan is the general structure-borne noise of the steering system. Moan is primarily transmitted to the driver via the body structure through the pump mount, engine mounts, power steering lines and power steering brackets. On some vehicles, moan is a load humming noise, often present when the wheel is turned and the system is loaded. It may change frequency with engine RPM and if the system is loaded or unloaded.

Rack Knock (Rack Slap)

⚠CAUTION: DO NOT attempt to adjust the steering gear yoke. Failure to follow this instruction will result in the steering gear warranty to become invalid.

Rack Knock is a rattle sound and steering wheel vibration caused by separation of the steering gear and pinion while driving over bumps. It

is a structure-borne noise transmitted through the intermediate shaft and column. Rack knock can also be heard as a "thump" or impact noise that occurs with the vehicle stationary when the steering wheel is released from a loaded position and allowed to return to rest. Noise occurs with the engine on or off.

Rattles

Rattles are noises caused by knocking or hitting with components in the steering system. Steering rattles can occur in the engine compartment, the suspension, or the passenger compartment . Rattles can be caused by loose parts, movable and flexible parts, and improper clearances.

Squeaks/Scrapes

Squeaks/Scrapes are noises due to friction or component rubbing anywhere in the steering system. Squeaks/Scrapes have appeared in steering linkages and joints, in column components and in column and steering wheel trim parts.

Weep

Weep is an air-borne noise, occasionally generated when turning the steering across lock at a constant rate. When present on a vehicle the noise, once initiated can often be maintained across a large proportion of the available steering movement.

Whistle

Whistle is similar to hiss but is louder and of a higher frequency. It is also more of a pure tone noise than hiss. Whistle is air-borne and is generated by a high flow rate of hydraulic fluid through a small restriction.

Zip

Zip noise is the air-borne noise generated by power steering pump cavitation when power steering fluid does not flow freely through the suction hose from the reservoir to the pump. Zip primarily occurs during cold weather at start-up.

Steering System Vibrations and Harshness

Buzz

Buzz is a tactile rotary vibration felt in the steering wheel for slow steering inputs. Buzz can also be called a grinding feel and it is closely related to grunt and is caused by high system gain with low damping. Buzz is generally excited during parking manoeuvres with low to medium speed steering input.

Buzz (Electrical)

A different steering buzz can be caused by pulse width modulated (PWM) electric actuators used in variable assist steering systems. This buzz is felt by turning the ignition key to run without starting the engine and holding onto the steering wheel. In extreme cases, the buzz can be felt with the engine running also.

Column/Steering Wheel Shake

Column shake is a low frequency vertical vibration excited by primary engine vibrations.

Nibble (Shimmy)

Steering nibble is a rotary oscillation or vibration of the steering wheel, which can be excited at a specific vehicle speed. Nibble is driven by wheel and tire imbalance exciting a suspension recession mode, which then translates into steering gear travel and finally steering wheel nibble.

Shudder (Judder)

Shudder is a low frequency oscillation of the entire steering system (tire, wheels, steering gear and linkage, etc.) when the vehicle is steered during static-park or at low speeds. Shudder is very dependent on road surface.

Torque Ripple

Torque ripple is a concern with Electric Power Steering (EPS) systems. Torque ripple is most evident at static-park steering the wheel very slowly from lock to lock. Torque ripple is primarily caused by motor commutation.

Torque/Velocity Variation (Phasing/Effort Cycling)

Steering wheel torque variation occurring twice in one revolution is normally as a result of problems with the lower steering column (intermediate shaft), but foul conditions generally result in either constant stiffness or single point stiffness. Depending upon the orientation of the joints, the steering can feel asymmetric (torque falling off in one direction and rising in the other) or else it can simply have pronounced peaks and troughs as the steering moves from lock to lock.

Wheel Fight (Kick Back)

Wheel fight is excess feedback of sudden road forces through the steering system and back to the driver. It is evaluated at all vehicle speeds over cobblestones, rough roads, and potholes. The tires, wheels, and suspension generate forces into the steering systems. Steering friction, hydraulic damping, hydraulic compliance, mechanical compliance, steering ratio, and assist gain all affect how much is transmitted to the driver.

Steering Linkage

CAUTION: Steering gear boots must be handled carefully to avoid damage. Use new clamps when installing steering gear boots.

Inspect the boots for cuts, deterioration, twisting or distortion. Check the steering gear boots to make sure they are tight. Install new boots or clamps as necessary.

• NOTE: The following steps must be carried out with assistance.

1. **1.** With the wheels in the straight ahead position, gently turn the steering wheel to the left and the right to check for free play.
2. **2.** Free play should be between 0 and 6 mm (0 and 0.24 in) at the steering wheel rim. If the free play exceeds this limit, either the

ball joints are worn, the lower steering column joints are worn or the backlash of the steering gear is excessive.

3. CAUTION: DO NOT attempt to adjust the steering gear yoke. Failure to follow this instruction will result in the steering gear warranty to become invalid.

   3. The backlash of the steering gear cannot be adjusted, install a new steering gear. For additional information, REFER to Section 211-02 Power Steering.

4. **4.** Grasp the steering wheel firmly and move it up and down and to the left and right without turning the wheel to check for column bearing wear, steering wheel or steering column. For additional information, REFER to Section 211-04 Steering Column.

Steering System - General Information - Power Steering System Filling

General Procedures

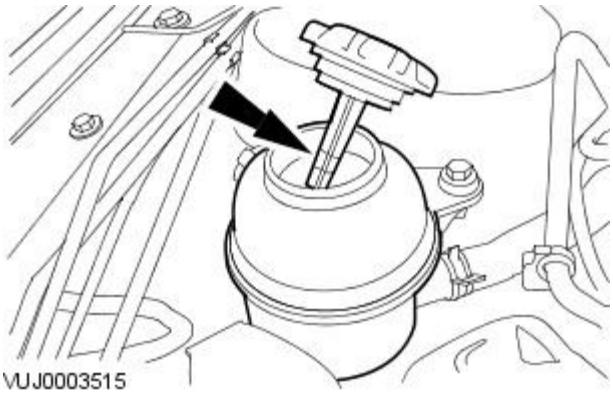

1. NOTE: When filling the reservoir, make sure that the fluid is clean and not agitated prior to use. The fluid should be poured slowly into the reservoir to minimize the possibility of aeration.

Fill the reservoir.

2. NOTE: Do not start the engine.

Turn the steering from lock to lock.

3. Check the fluid level. Fill the reservoir if necessary.

4. Start the engine and allow to idle. Top up the reservoir as air is vented.

5. With the engine idling turn the steering from lock to lock topping up the reservoir if necessary.

6. When no further change of fluid level occurs run engine for a further 20 minutes to vent any remaining air.

7. With the engine idling, turn the steering wheel from lock to lock. If excessive noise is apparent or shudder is evident through the steering wheel, repeat the filling procedure.

Steering System - General Information - Power Steering System Flushing

General Procedures

• NOTE: If heavy steering or contamination within the power steering system is found, it is necessary to carry out the system flush procedure as detailed below. If any components have been replaced in the power steering system the procedure below must be carried out in full.

• NOTE: Some variation in the illustrations may occur, but the essential information is always correct.

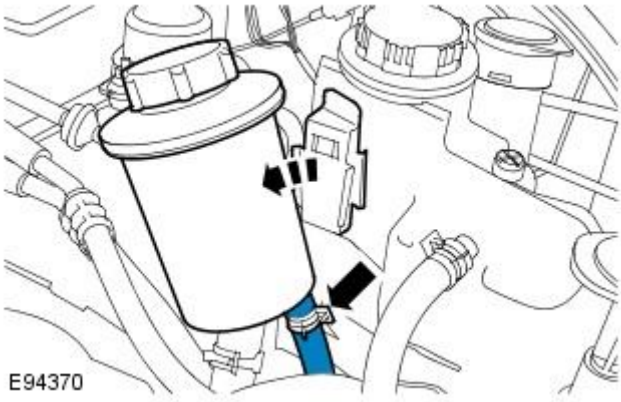

1. Remove the power steering fluid reservoir cap.
2. Using a suitable syringe, remove the power steering fluid from the power steering fluid reservoir.
3. CAUTION: Be prepared to collect escaping fluids.

• NOTE: Note the orientation of the clip.

Detach the power steering fluid reservoir.

- Detach but do not remove the power steering fluid reservoir.
- Release the power steering fluid return hose from the power steering fluid reservoir.
- If a quick release coupling is fitted to the power steering return hose, release the power steering fluid return hose from the coupling by removing the clip.

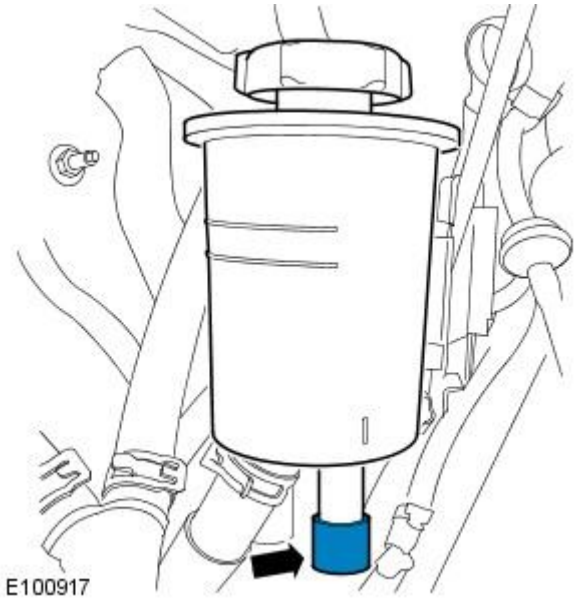

4. CAUTION: Be prepared to collect escaping fluids.

• NOTE: Make sure that all openings are sealed. Use new blanking caps.

Using a suitable blanking cap, cap the power steering reservoir return pipe.

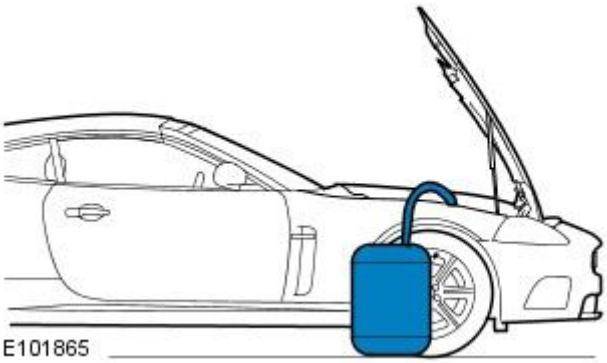

5. CAUTION: Be prepared to collect escaping fluids.

• NOTE: Make sure the extended pipe is not kinked or twisted and is correctly secured with hose clips.

Attach a suitable pipe to the power steering return hose to allow the fluid to drain.

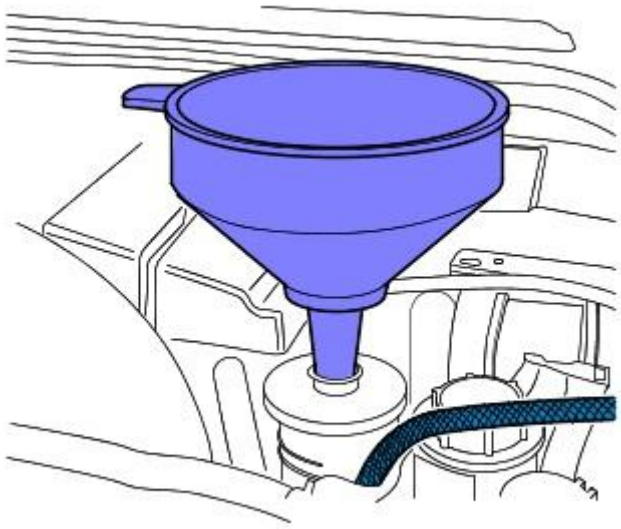

E94372

6. NOTE: The suitable funnel should have the a capacity of 4 litres and O-ring seal

• NOTE: The suitable funnel must be tightly sealed to the power steering fluid reservoir to avoid fluid leakage.

Install a suitable funnel onto the power steering fluid reservoir.

7. WARNING: Do not work on or under a vehicle supported only by a jack. Always support the vehicle on safety stands.

Raise and support the vehicle with the wheels just clear of the ground.

8. CAUTIONS:

Steps 8 and 9 must be carried out within 2 - 3 seconds of each other. Failure to follow this instruction may result in damage to the power steering system.

Be prepared to collect escaping fluids.

Using the suitable funnel, top up the power steering system with the specified fluid. Make sure the fluid level is maintained at two thirds full in the funnel.

9. CAUTIONS:

Be prepared to collect escaping fluids.

Do not allow the power steering fluid level in the power steering fluid reservoir to fall below the minimum power steering fluid level. Failure to follow this instruction may result in damage to the power steering system.

Make sure the engine is switched off as soon as the full 4 litres of power steering fluid has entered the power steering fluid reservoir.

Flush the power steering system.

- Start the engine
- With assistance turn the steering slowly lock to lock 3 times at approximately 1 revolution every 5 seconds.
- Continue to flush the power steering system until 4 litres of power steering fluid has been added to the power steering reservoir. This should take approximately 30 seconds.

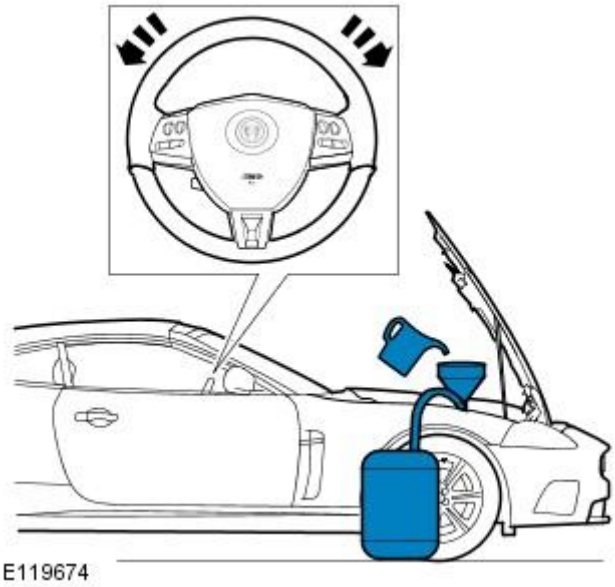

E119674

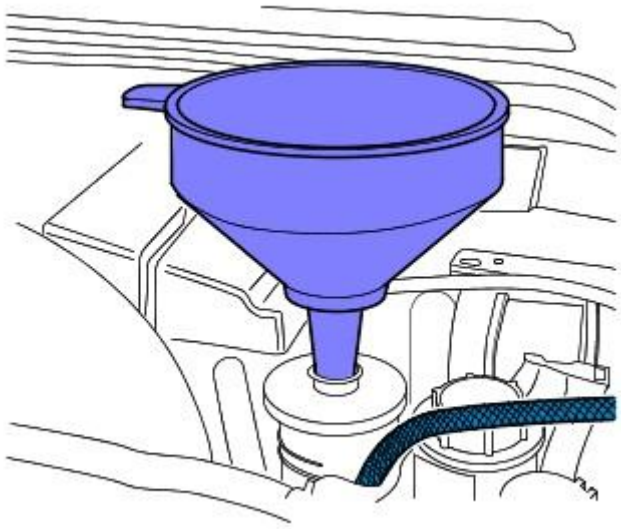

E94372

10. CAUTION: Be prepared to collect escaping fluids.

Remove the suitable funnel.

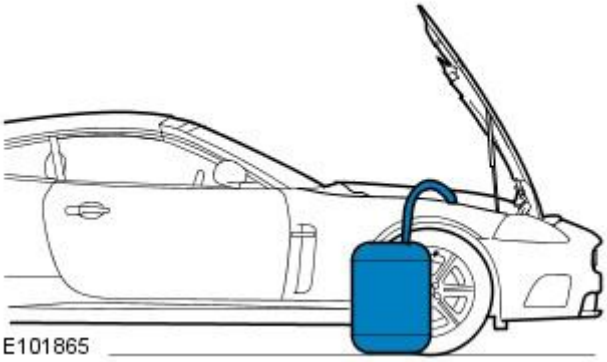

E101865

11. CAUTION: Be prepared to collect escaping fluids.

Remove the suitable pipe to the power steering return hose.

12. CAUTION: Be prepared to collect escaping fluids.

- NOTE: Note the orientation of the clip.

If a quick release coupling is fitted to the power steering return hose, connect the power steering fluid return hose to the coupling by installing the clip.

13. Install a new power steering fluid reservoir. For additional information, refer to: (211-02)

Power Steering Fluid Reservoir - 4.2L/3.0L/2.7L Diesel (Removal and Installation),
Power Steering Fluid Reservoir - 3.0L Diesel (Removal and Installation).

Published: 11-May-2011

Power Steering -

General Specifications

Item	Specification
Power assisted steering fluid	Dexron 2E

Torque Specifications

Description	Nm	lb-ft	lb-in
Tie rod end retaining nut	35	26	-
Power steering pump retaining bolts	25	18	-
Extension shaft lower retaining bolt	27	20	-
Power steering gear actuator retaining bolts	3	-	27
Power steering gear retaining bolts	115	85	-
Latch plate to pinion housing retaining bolt	10	7	-

Power Steering - Power Steering

Description and Operation

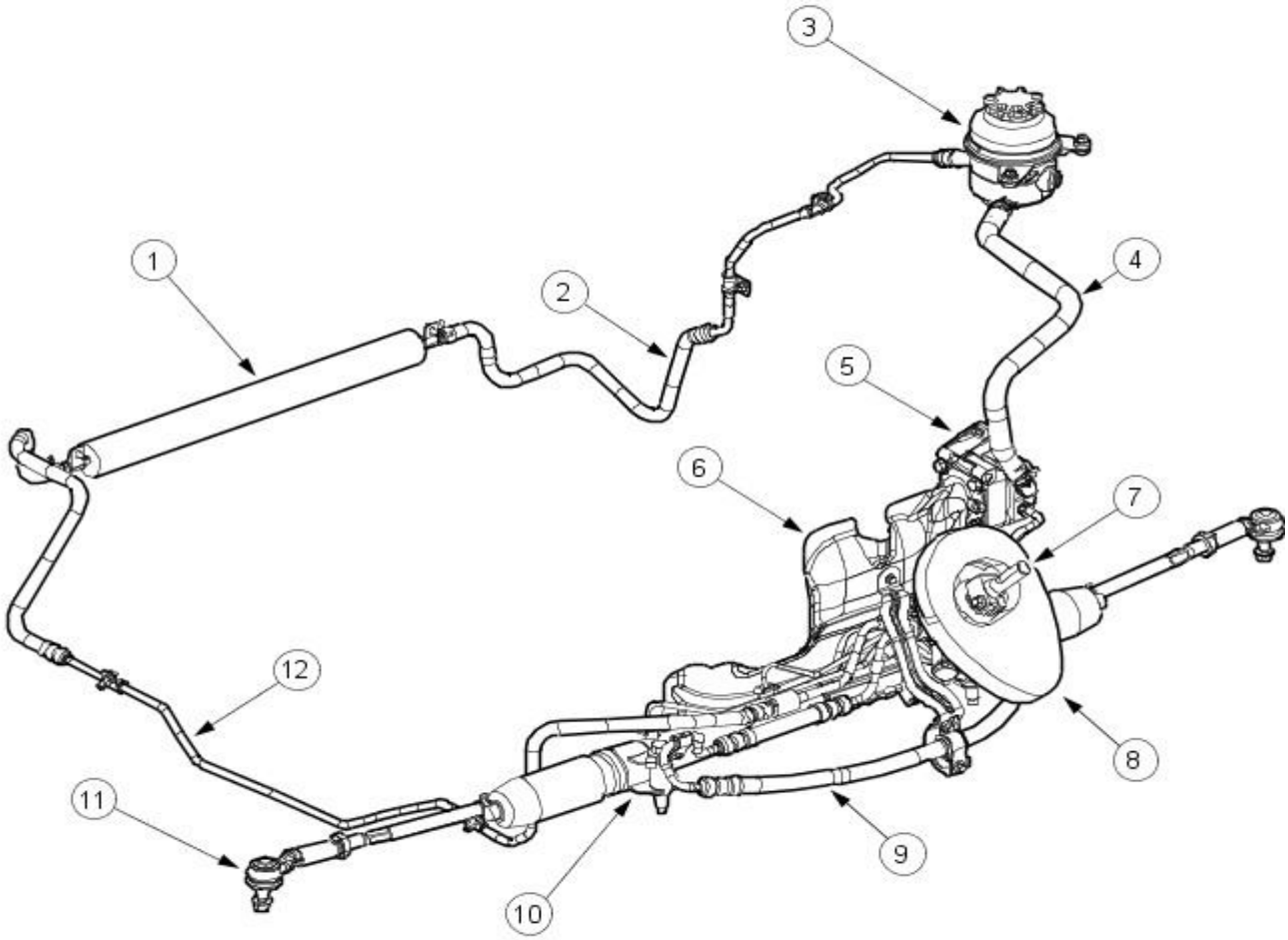

VUJ0003736

Item	Part Number	Description
1	—	Fluid cooler
2	—	Low pressure pipe - fluid cooler to reservoir
3	—	Fluid reservoir
4	—	Power steering pump suction hose
5	—	Power steering pump
6	—	Heat shield
7	—	Extension shaft
8	—	Dash panel seal
9	—	High pressure pipe
10	—	Steering gear
11	—	Tie-rod end
12	-	Low pressure pipe - steering gear to fluid cooler

Vehicles with 2.0L or diesel engines

The power steering system uses a rack and pinion type, variable ratio steering gear. The power steering pump is belt driven on all model variants and the power steering oil cooler is of a wire bound tube type and is mounted in front of the radiator.

Vehicles with 2.5L or 3.0L engines

The power steering system uses a rack and pinion type, variable ratio steering gear with servotronic steering assistance. The power steering pump is belt driven on all model variants and the power steering oil cooler is of a wire bound tube type and is mounted in front of the radiator.

A variable steering rack ratio reduces the amount of turns from lock to lock to improve parking maneuvers without loosing any steering feel at higher speeds.

The steering assistance decreases smoothly at a calibrated rate to increase the steering efforts required as vehicle speed increases. The steering efforts are controlled by the servotronic valve (actuator) position, which in turn is controlled electronically by the servotronic ECU housed in the instrument cluster.

Absolute cleanliness must be observed when replenishing the fluid or dismantling any part of the system. New fluid from a sealed container must be used.

• NOTE: If the steering gear, pump or cooler are being replaced for leakage or noise related issues and there is no evidence of fluid contamination, there is no need to replace the reservoir.

In some cases where the fluid clearly contains particulate matter, and the system continues to function, flush the system with fresh fluid and replace the reservoir, as there is the possibility that the reservoir internal filter may be damaged or faulty.

Published: 11-May-2011

Power Steering - Power Steering

Diagnosis and Testing

For additional information, refer toSection 211-00 Steering System - General Information.

Published: 11-May-2011

Power Steering - Start Up Procedure After Power Steering Pump/Gear Overhaul

General Procedures

1. For additional information, refer toSection 211-00 Steering System - General Information.

Power Steering - Power Steering Control Valve Actuator2.5L NA V6 - AJV6 / 3.0L NA V6 - AJ27

Removal and Installation

Removal

1. Raise and support the vehicle. For additional information, refer to Section 100-02 Jacking and Lifting.
2. Remove the exhaust front muffler. For additional information, refer to Section 309-00 Exhaust System.
3. Remove the heat shield.

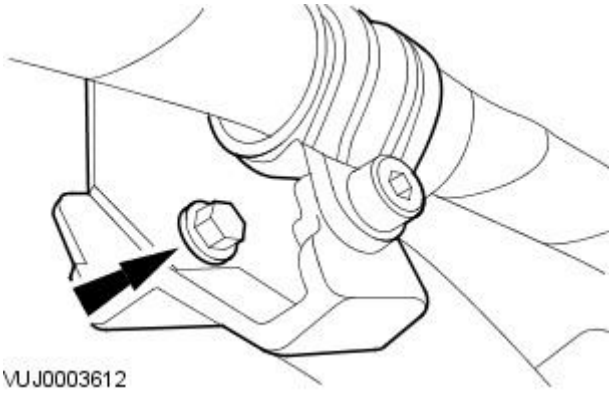

4. Disconnect the electrical connector.

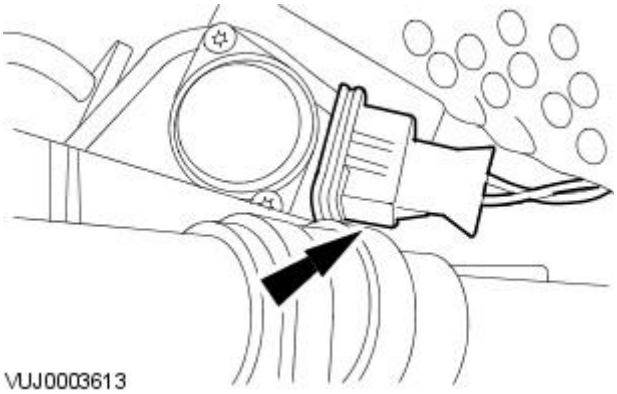

5. Remove the actuator.

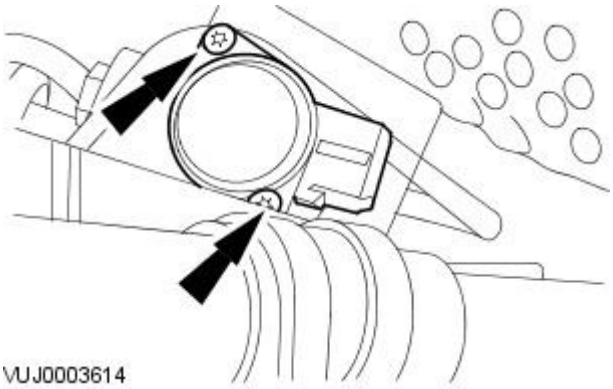

6. Remove and discard the filter.

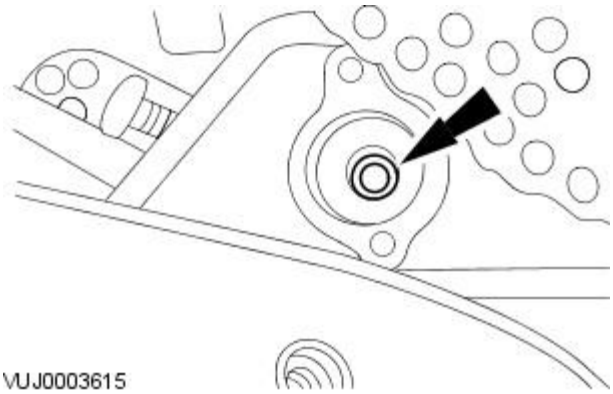

Installation

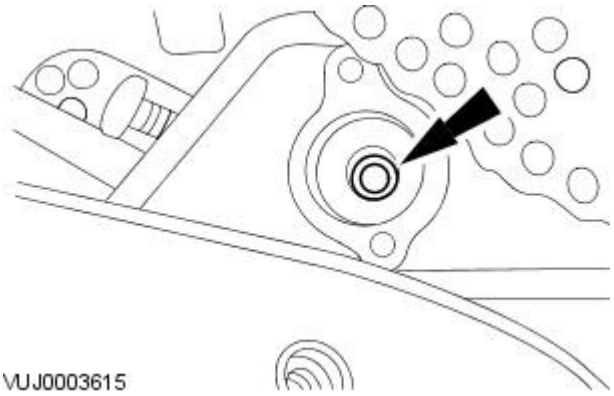

1. To install, reverse the removal procedure.

1. Install a new filter

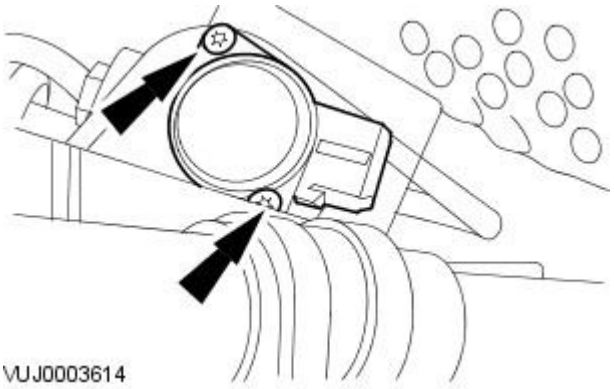

2. CAUTION: Make sure bolts are tightened evenly.

Tighten to 3 Nm.

Power Steering - Power Steering Fluid Cooler2.0L Duratorq-TDCi

Removal and Installation

Removal

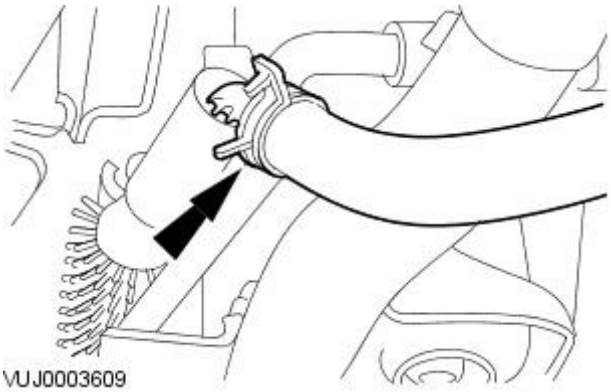

VUJ0003609

1. Remove the radiator splash shield. For additional information, refer to For additional information, refer to: Radiator Splash Shield (501-02 Front End Body Panels, Removal and Installation).
.
2. Disconnect the power assisted steering oil cooler inlet and outlet hoses.
   - Left-hand side shown, right-hand side similar.
   - Drain the fluid into a suitable container.

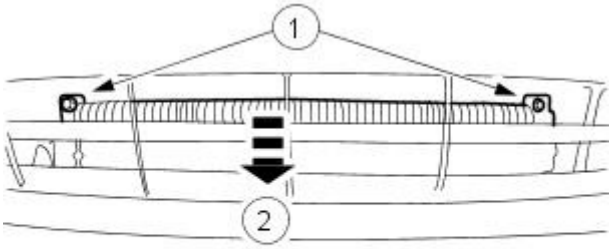

VUJ0003610

3. Remove the power assisted steering oil cooler.
   1. Remove the mounting bolts.
   2. Remove the power assisted steering oil cooler.

Installation

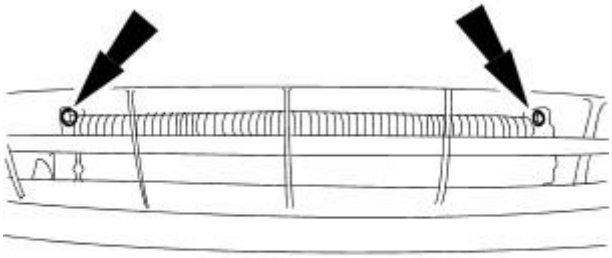

VUJ0003996

1. To install, reverse the removal procedure.
   - Tighten to 7 Nm.

2. NOTE: If the cooler is being replaced for leakage or noise related issues and there is no evidence of fluid contamination, there is no need to replace the reservoir.

   In some cases where the fluid clearly contains particulate matter, and the system continues to function, flush the system with fresh fluid and replace the reservoir, as there is the possibility that the reservoir internal filter may be damaged or faulty.

Power Steering - Power Steering Fluid Cooler2.2L Duratorq-TDCi (110kW/150PS) - Puma

Removal and Installation

Removal

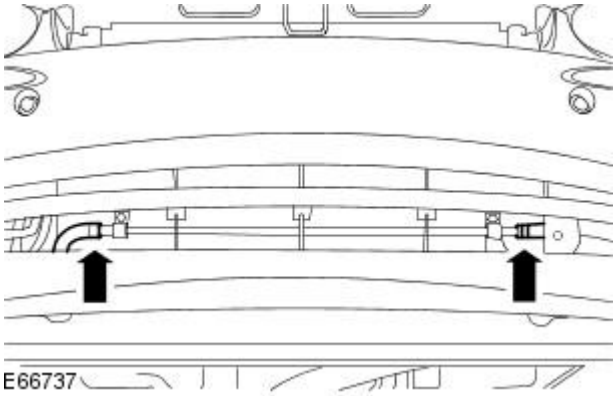

1. Remove the radiator splash shield.
   For additional information, refer to: Radiator Splash Shield (501-02 Front End Body Panels, Removal and Installation).
2. Disconnect the power steering fluid cooler hoses.
   - Drain the fluid into a suitable container.

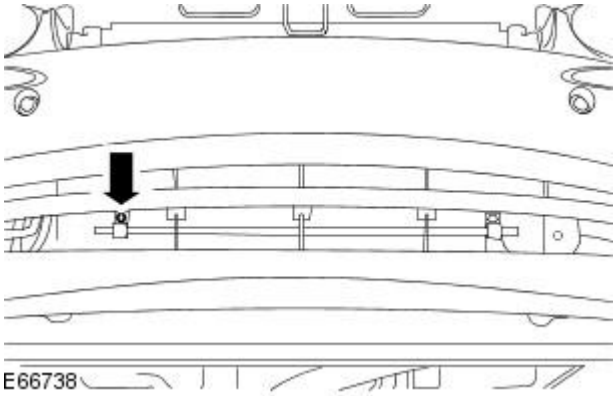

3. Remove the power steering fluid cooler retaining bolt.

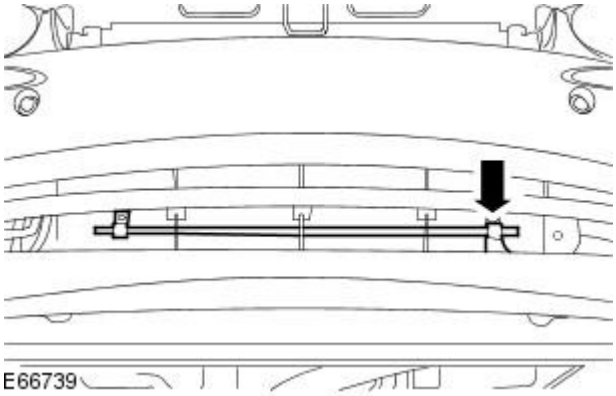

4. Remove the power steering fluid cooler.
   - Detach the power steering fluid cooler from the retaining clip.

Installation

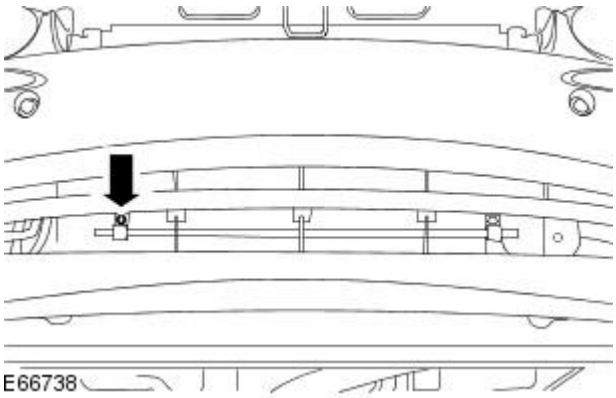

1. To install, reverse the removal procedure.
   - Tighten to 7 Nm.

2. NOTE: If the cooler is being replaced for leakage or noise related issues and there is no evidence of fluid contamination, there is no need to replace the reservoir.

In some cases where the fluid clearly contains particulate matter, and the system continues to function, flush the system with fresh fluid and replace the reservoir, as there is the possibility that the reservoir internal filter may be damaged or faulty.

Power Steering - Power Steering Fluid Reservoir

Removal and Installation

Removal

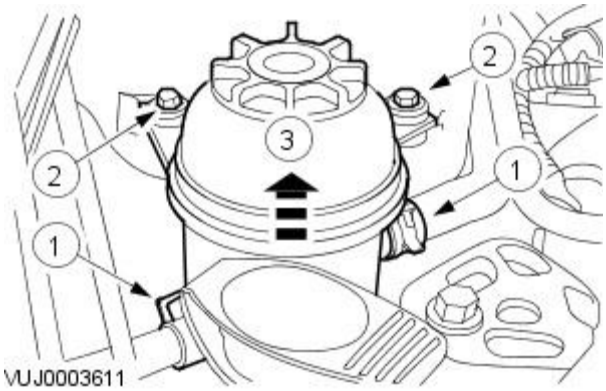

1. CAUTION: If power steering fluid is spilt on the paintwork, the effected area must be immediately washed down with cold water.

Remove the power steering fluid reservoir.

1. Disconnect the power steering supply and return hoses.
   1. Drain the fluid into a suitable container.
2. Remove the power steering reservoir bolts.
3. Remove the power steering reservoir.

Installation

1. CAUTION: Use only Jaguar specification Dexron 2E power assisted steering oil.

To install, reverse the removal procedure.

2. Bleed the power steering system. For additional information, refer to Section 211-00 Steering System - General Information.

Power Steering - Power Steering Pump2.0L NA V6 - AJV6 / 2.5L NA V6 - AJV6 / 3.0L NA V6 - AJ27

Removal and Installation

Removal

1. Remove the accessory drive belt.
For additional information, refer to: Accessory Drive Belt - 2.0L NA V6 - AJV6/2.5L NA V6 - AJV6/3.0L NA V6 - AJ27 (303-05 Accessory Drive, Removal and Installation).

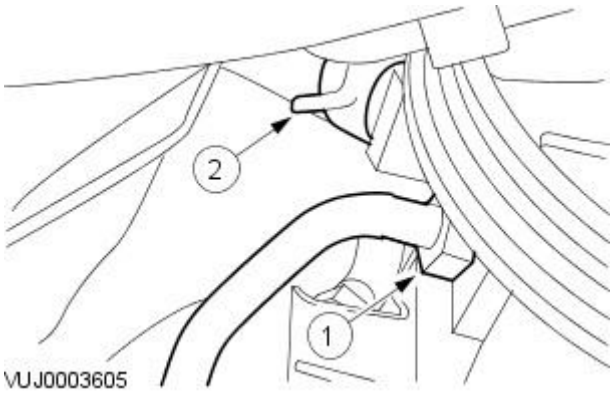

2. CAUTION: Whenever the power steering pump unions are disconnected the steering gear valve body ports and hoses should be plugged to prevent dirt ingress.

Disconnect the power steering feed and high pressure hoses.

1. Disconnect the power steering high pressure hose.
   1. Drain the fluid into a suitable container.
      - Remove and discard the O-ring seal.
2. Disconnect the power steering feed hose.

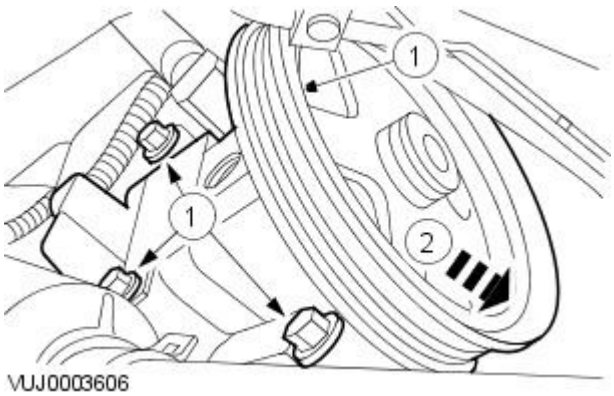

3. Remove the power steering pump.

1. Remove the power steering pump retaining bolts, power steering pump heat shield and high pressure pipe securing bracket.
2. Remove the power steering pump.

Installation

1. To install, reverse the removal procedure.

- Install a new O-ring seal.

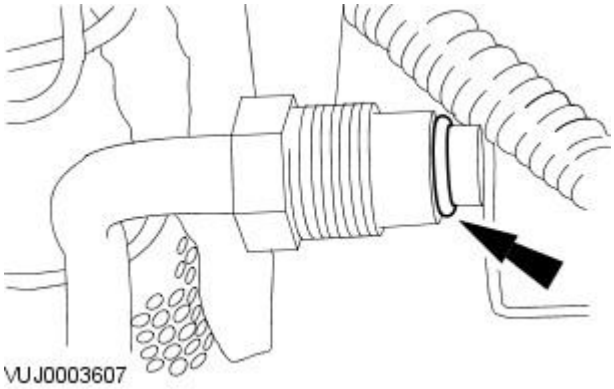

2. CAUTION: Make sure the heat shield is fitted correctly and is free from damage.

Tighten to 25 Nm.

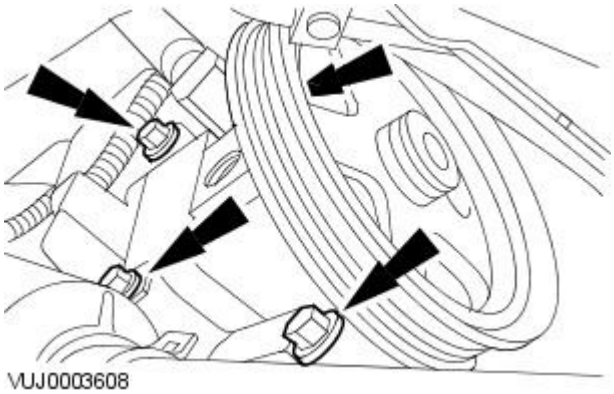

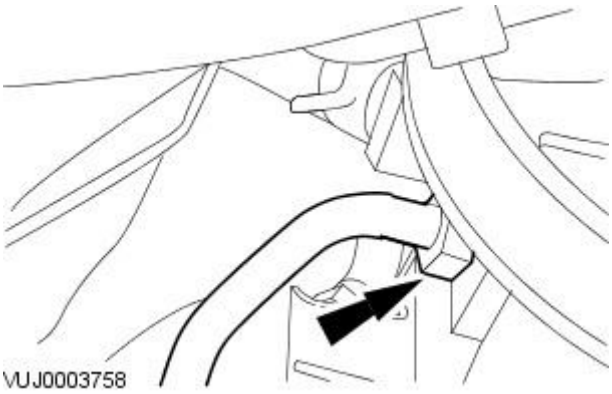

3. Tighten to 30 Nm.

4. NOTE: If the steering gear, pump or cooler are being replaced for leakage or noise related issues and there is no evidence of fluid contamination, there is no need to replace the reservoir.

In some cases where the fluid clearly contains particulate matter, and the system continues to function, flush the system with fresh fluid and replace the reservoir, as there is the possibility that the reservoir internal filter may be damaged or faulty.

Power Steering - Power Steering Pump2.0L Duratorq-TDCi / 2.2L Duratorq-TDCi (110kW / 150PS) - Puma

Removal and Installation

Materials

Name	Specification
Grease	WSS-M12A4-A2

Removal

1. Disconnect the battery ground cable.
   For additional information, refer to: Battery Disconnect and Connect (414-01 Battery, Mounting and Cables, General Procedures).
2. Remove the air deflector.
   For additional information, refer to: Air Deflector - 2.0L Duratorq-TDCi/2.2L Duratorq-TDCi (110kW/150PS) - Puma (501-02 Front End Body Panels, Removal and Installation).
3. Remove the air cleaner.
   For additional information, refer to: Air Cleaner (303-12B Intake Air Distribution and Filtering - 2.0L Duratorq-TDCi/2.2L Duratorq-TDCi (110kW/150PS) - Puma, Removal and Installation).
4. Detach the generator and starter motor positive cable from the air cleaner mount bracket.

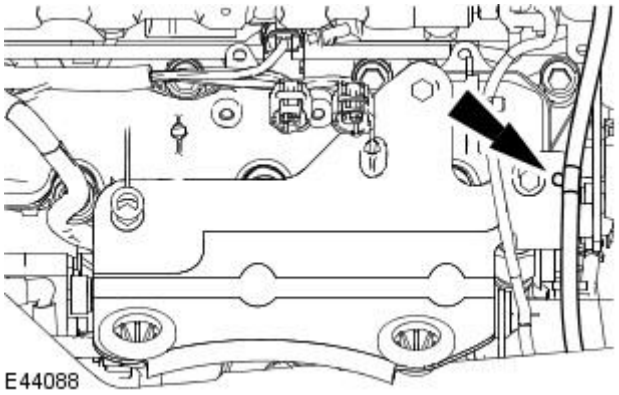

5. Remove the air cleaner mount bracket.

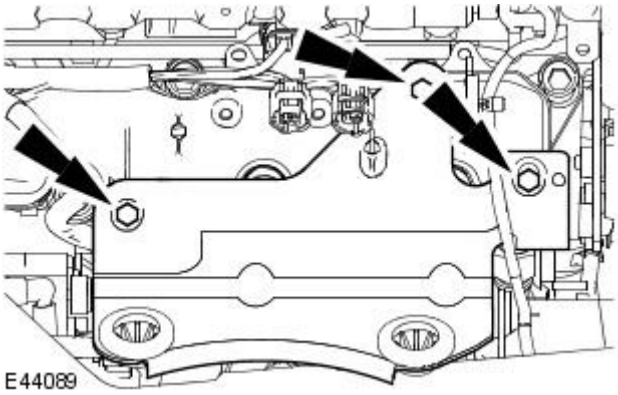

6. Detach the power steering pump belt.
   - Rotate the power steering pump belt tensioner clockwise.

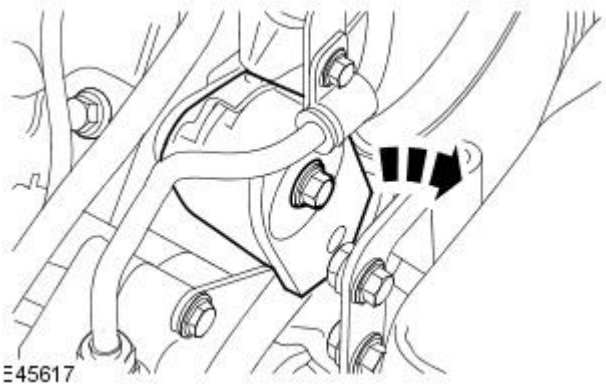

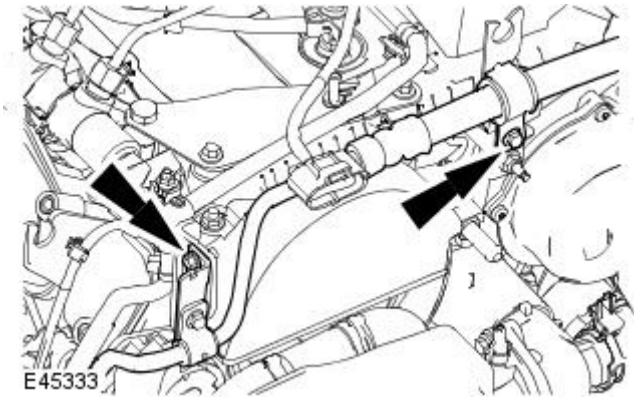

7. Detach the power steering high-pressure pipe.

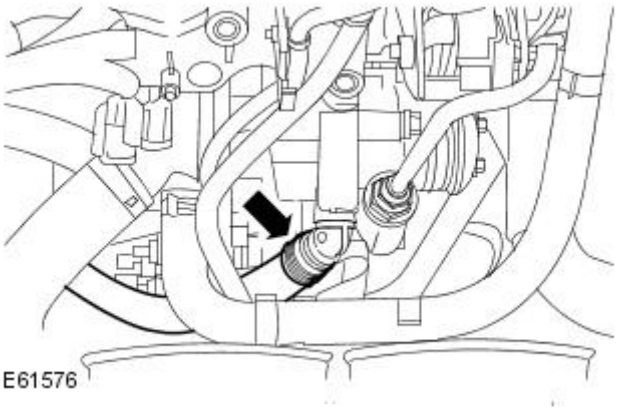

8. CAUTION: Whenever the power steering pump feed hose is disconnected the power steering pump port and hose should be plugged to prevent dirt ingress. Failure to follow this instruction may result in damage to the vehicle.

• NOTE: Shown with the exhaust gas recirculation (EGR) cooler to EGR valve tube removed for clarity.

Disconnect the power steering feed hose.

- Drain the fluid into a suitable container.

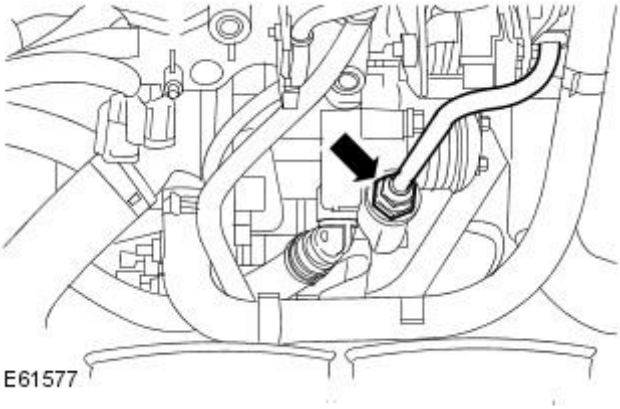

9. CAUTIONS:

Whenever the power steering high-pressure pipe union is disconnected the power steering pump port and pipe should be plugged to prevent dirt ingress. Failure to follow this instruction may result in damage to the vehicle.

Do not disconnect the quick release connector on the high-pressure pipe as it will not disconnect. Failure to follow this instruction may result in damage to the vehicle.

• NOTE: Shown with the EGR cooler to EGR valve tube removed for clarity.

Remove the power steering high-pressure pipe union from the power steering pump boss

- Remove and discard the O-ring seal.

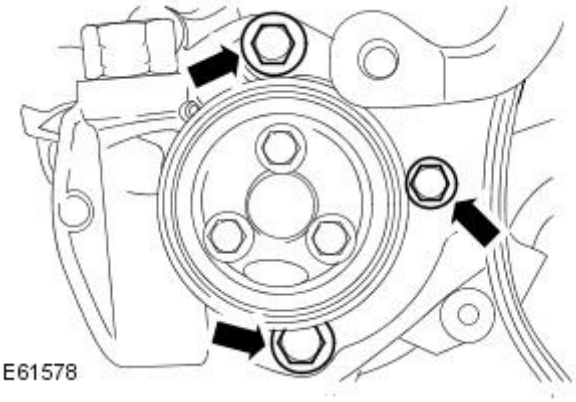

10. NOTE: Shown with the EGR cooler to EGR valve tube removed for clarity.

Remove the power steering pump retaining bolts.

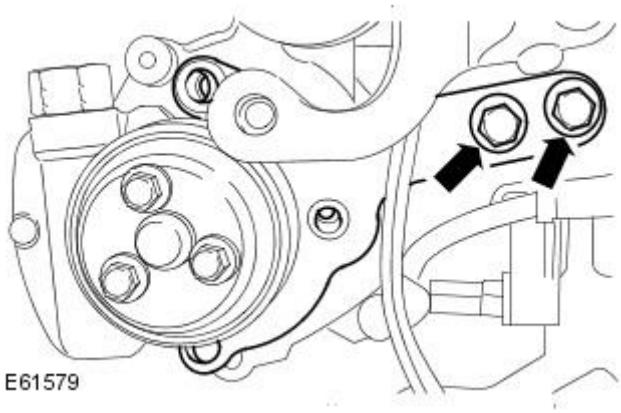

11. NOTE: Shown with the EGR cooler to EGR valve tube removed for clarity.

Remove the power steering pump securing bracket.

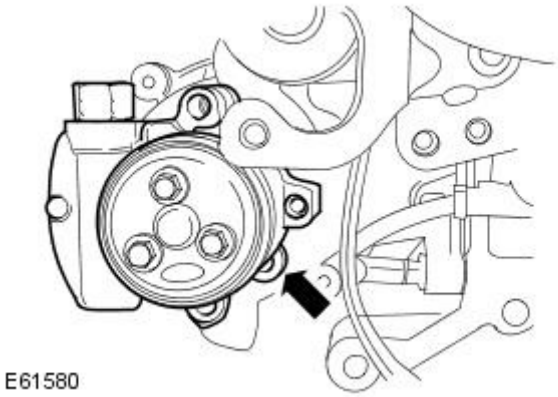

12. NOTE: Shown with the EGR cooler to EGR valve tube removed for clarity.

Detach the power steering pump from the coolant pump.

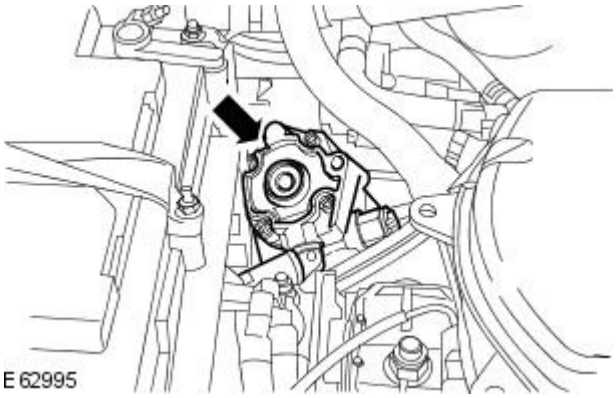

13. Remove the power steering pump.

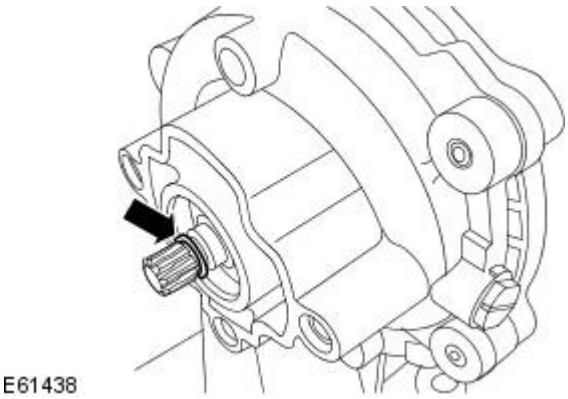

14. Remove and discard the water pump O-ring seal.

Installation

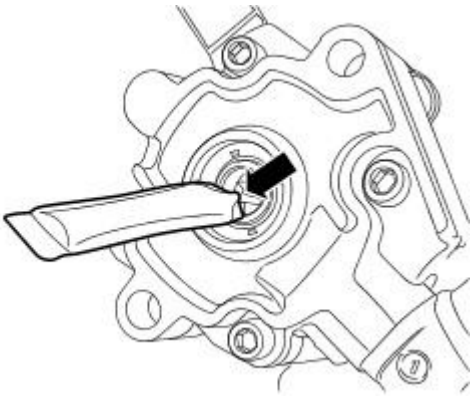

1. Coat the power steering pump drive splines with grease.

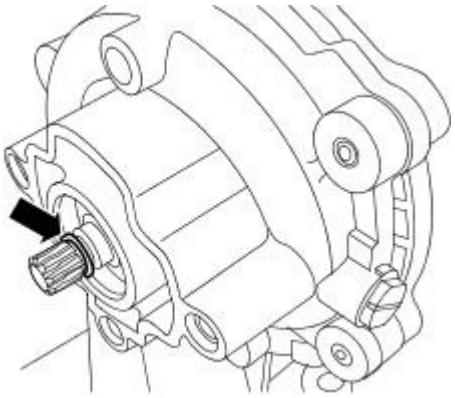

2. Install a new water pump O-ring seal.

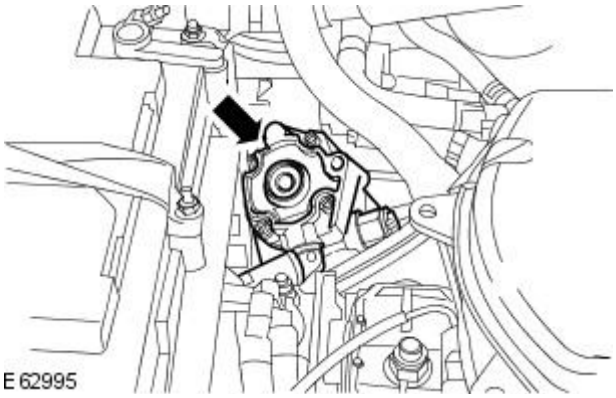

3. Install the power steering pump.

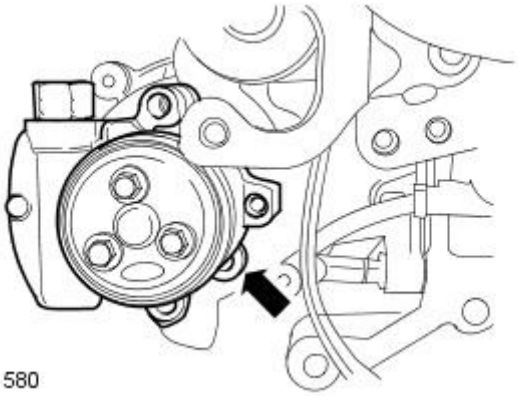

4. NOTE: Shown with the EGR cooler to EGR valve tube removed for clarity.

Attach the power steering pump to the coolant pump.

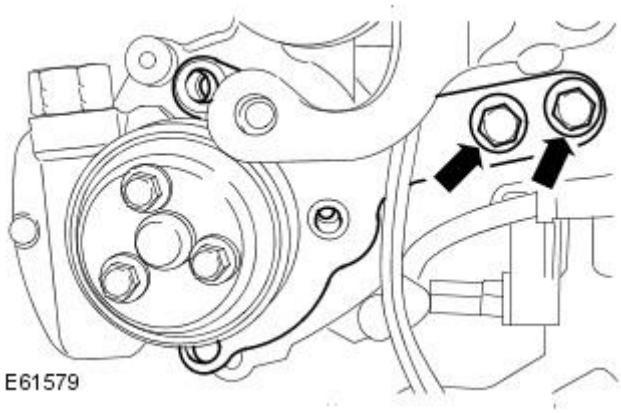

5. NOTE: Shown with the EGR cooler to EGR valve tube removed for clarity.

Install the power steering pump securing bracket.

- Tighten to 25 Nm.

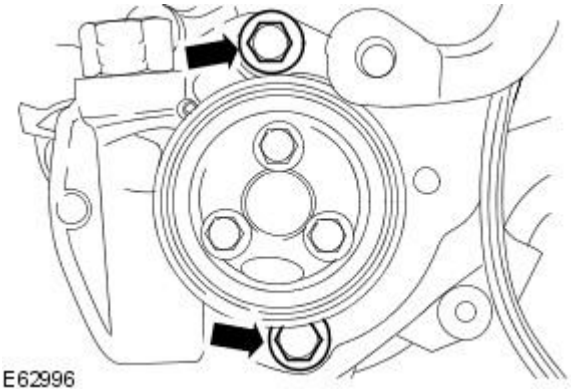

6. NOTE: Shown with the EGR cooler to EGR valve tube removed for clarity.

Install the power steering pump retaining bolts.

- Tighten to 25 Nm.

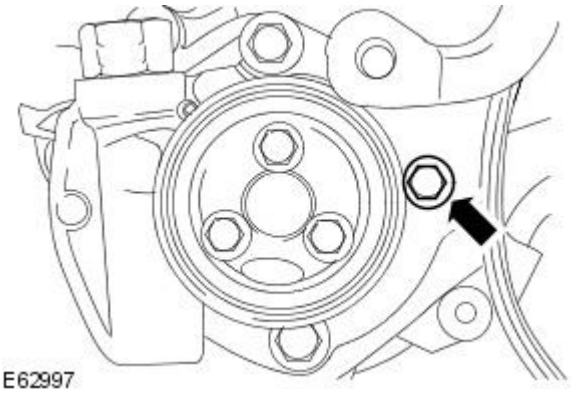

7. NOTE: Shown with the EGR cooler to EGR valve tube removed for clarity.

Install the power steering pump retaining bolt.

- Tighten to 10 Nm.

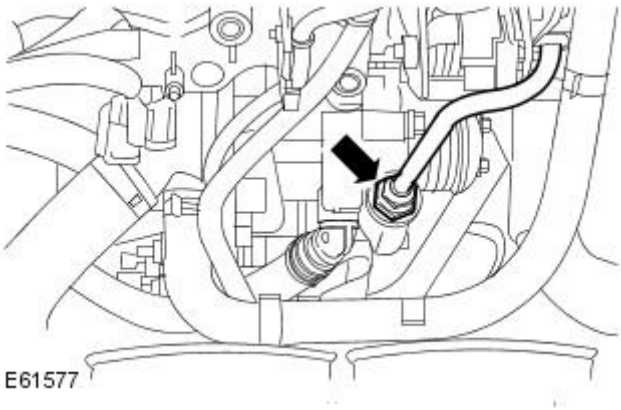

8. NOTE: Remove the plugs from the power steering pump port and the pipe.

• NOTE: Shown with the EGR cooler to EGR valve tube removed for clarity.

Connect the power steering high-pressure pipe union.

- Install a new O-ring seal.
- Tighten to 30 Nm.

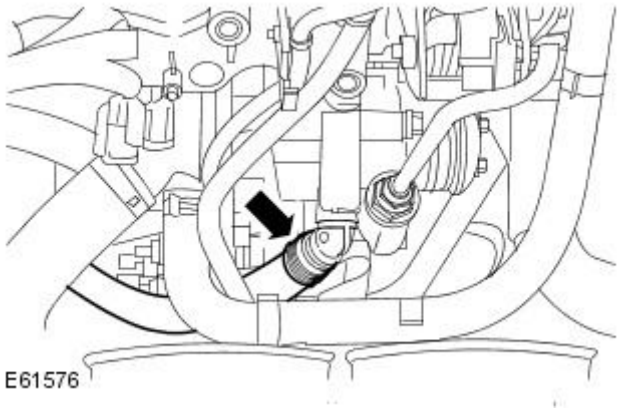

9. NOTE: Remove the plugs from the power steering pump port and the feed hose.

• NOTE: Shown with the EGR cooler to EGR valve tube removed for clarity.

Connect the power steering feed hose.

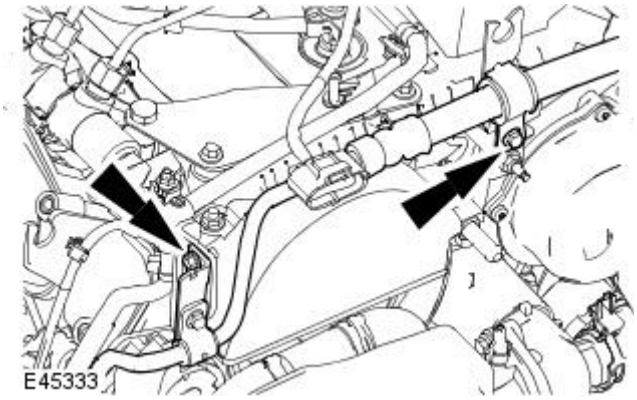

10. Attach the power steering high-pressure pipe.

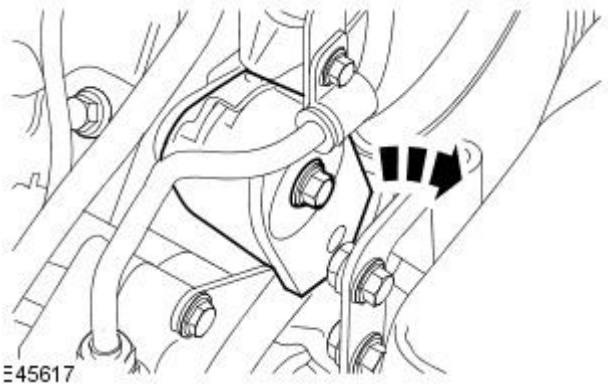

11. Attach the power steering pump belt.

- Rotate the power steering pump belt tensioner clockwise.

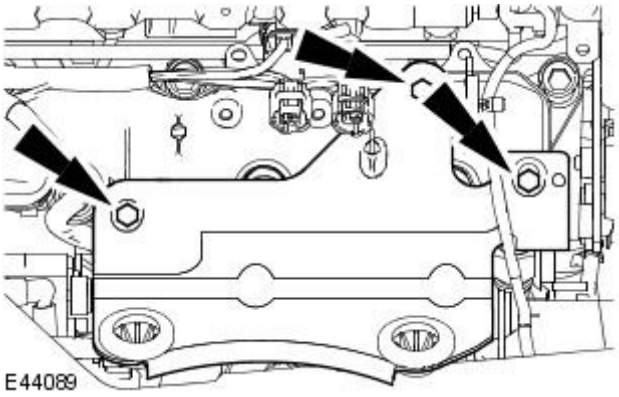

12. Install the air cleaner mount bracket.

- Tighten to 25 Nm.

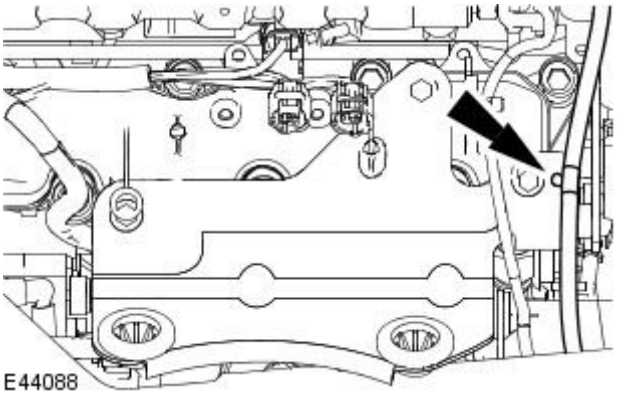

13. Attach the generator and starter motor positive cable to the air cleaner mounting bracket.

14. Install the air cleaner.
For additional information, refer to: Air Cleaner (303-12B Intake Air Distribution and Filtering - 2.0L Duratorq-TDCi/2.2L Duratorq-TDCi (110kW/150PS) - Puma, Removal and Installation).

15. Install the air deflector.
For additional information, refer to: Air Deflector - 2.0L Duratorq-TDCi/2.2L Duratorq-TDCi (110kW/150PS) - Puma (501-02 Front End Body Panels, Removal and Installation).

16. Connect the battery ground cable.
For additional information, refer to: Battery Connect (414-01 Battery, Mounting and Cables, General Procedures).

17. NOTE: If the pump is being replaced for leakage or noise related issues and there is no evidence of fluid contamination, there is no need to replace the reservoir.

In some cases where the fluid clearly contains particulate matter, and the system continues to function, flush the system with fresh fluid and replace the reservoir, as there is the possibility that the reservoir internal filter may be damaged or faulty.

Power Steering - Steering Gear2.0L Duratorq-TDCi / 2.2L Duratorq-TDCi (110kW / 150PS) - Puma

Removal and Installation

Removal

1. Center the steering wheel.

- Lock in position and remove the ignition key.

2. Remove and discard the extension shaft lower retaining bolt.

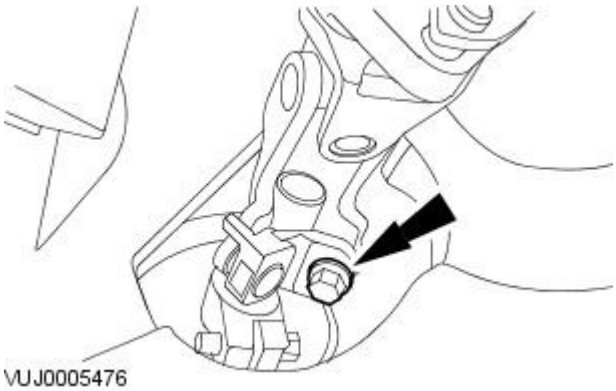

3. NOTE: Right-hand shown, left-hand similar.

Release both tie-rod end ball joints.

1. loosen the locknut.
2. Release both track rods from tie rod ends, note the number of turns for installation.

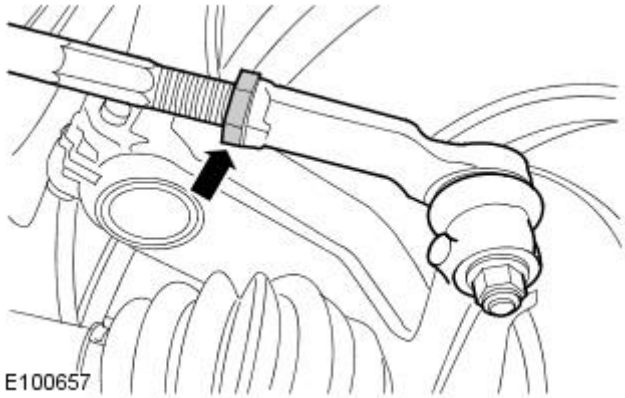

4. Remove the air deflector.
For additional information, refer to: Air Deflector - 2.0L Duratorq-TDCi/2.2L Duratorq-TDCi (110kW/150PS) - Puma (501-02 Front End Body Panels, Removal and Installation).

5. Disconnect the steering gear fluid lines.

1. Remove the latch plate bolt.
2. Rotate latch plate counter clockwise.
3. Disconnect the steering gear fluid lines.

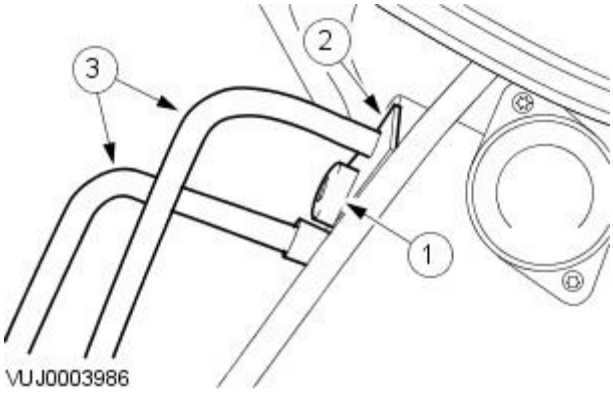

6. Detach the steering gear cooler pipe.

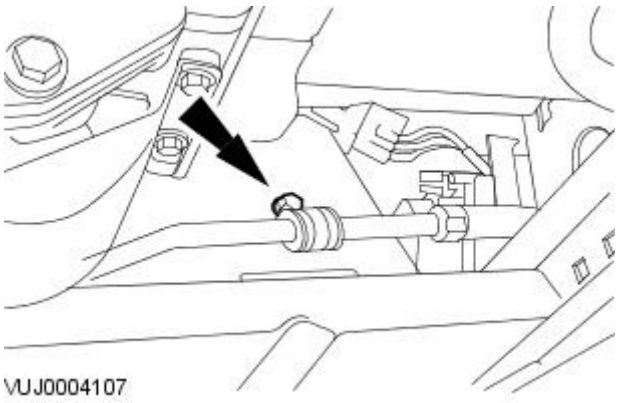

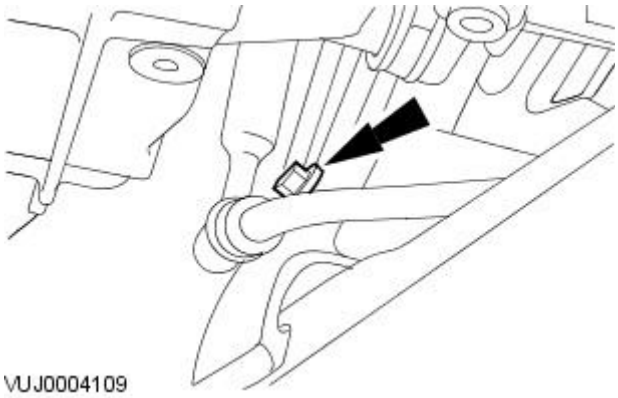

7. Detach the steering gear cooler pipe.

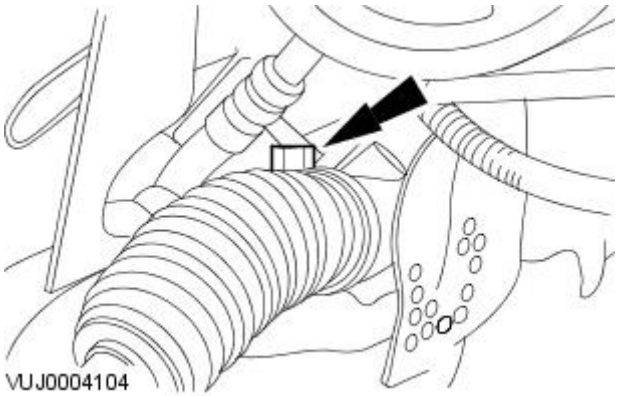

8. Detach the right-hand side of the steering gear.

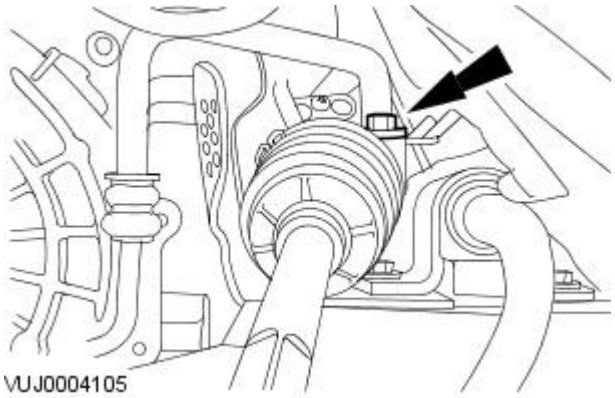

9. Detach the left-hand side of the steering gear.

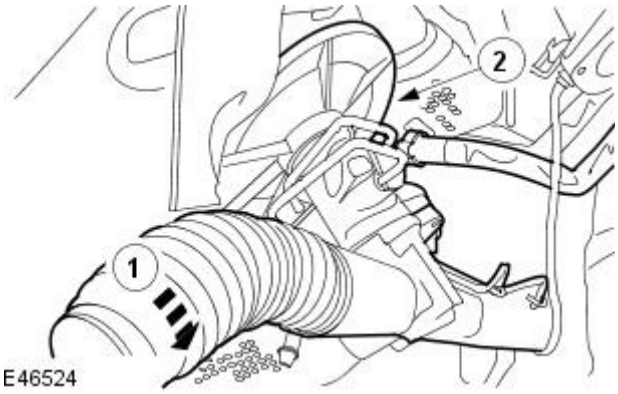

10. Remove the bulk head panel seal.

1. Reposition the steering gear.
2. Remove the bulk head panel seal.

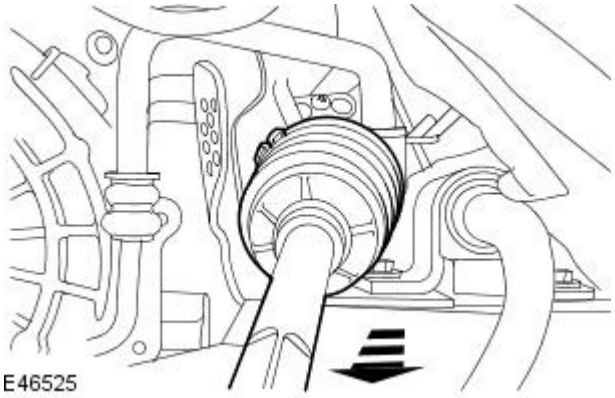

11. Remove the steering gear.

Installation

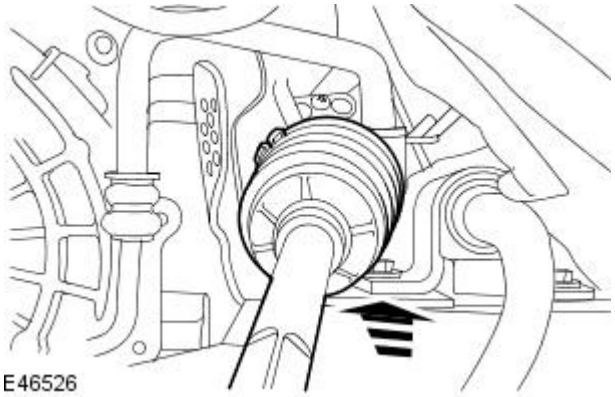

1. Install the steering gear.

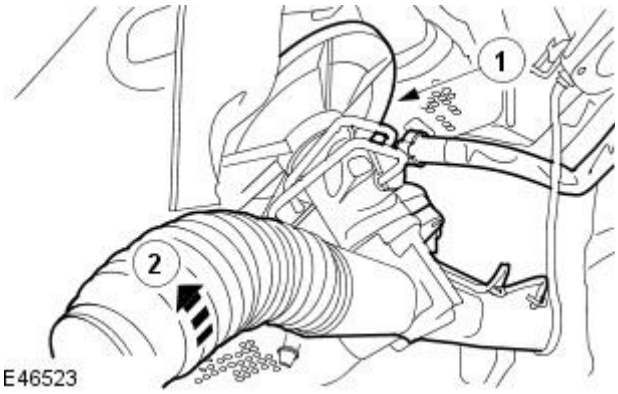

2. Reposition the steering gear.

1. Install the bulk head panel seal.
2. Reposition the steering gear.

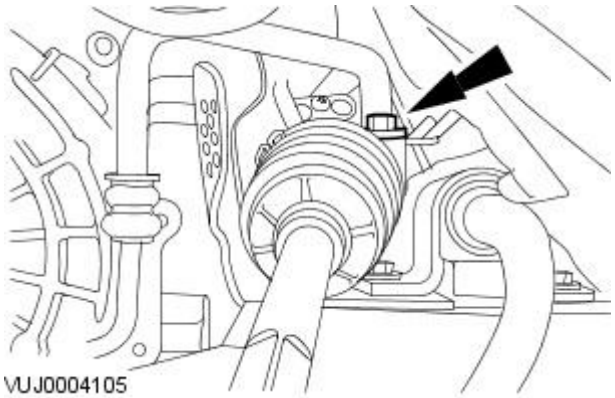

3. Attach the left-hand side of the steering gear.

- Tighten to 133 Nm.

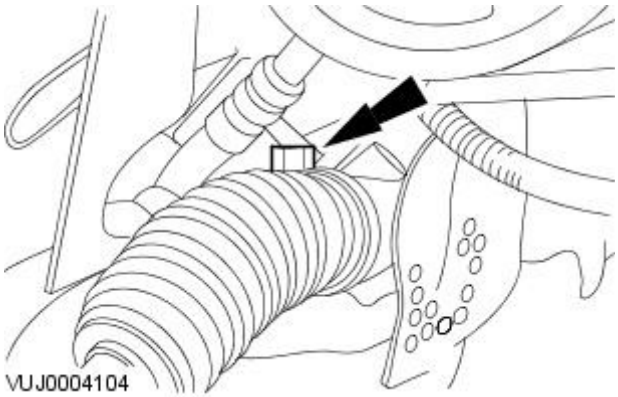

4. Attach the right-hand side of the steering gear.

- Tighten to 133 Nm.

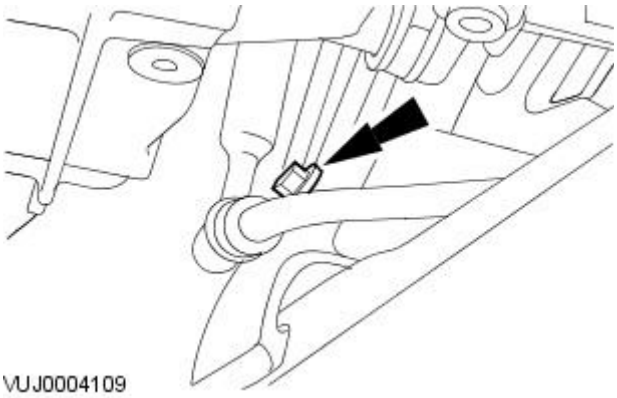

5. Attach the steering gear cooler pipe.

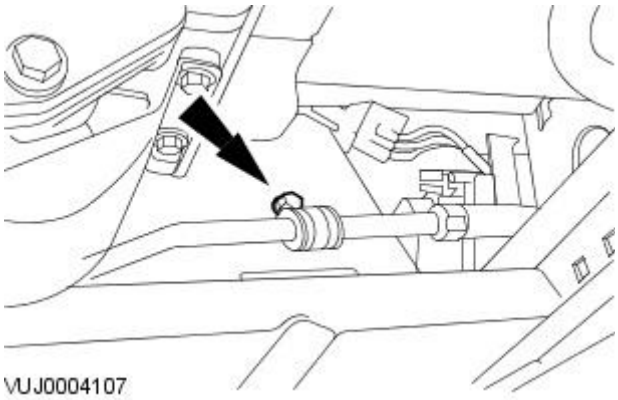

6. Attach the steering gear cooler pipe.

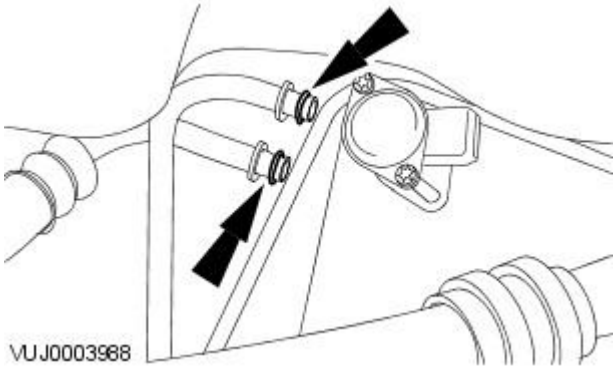

7. Install new O-ring seals.

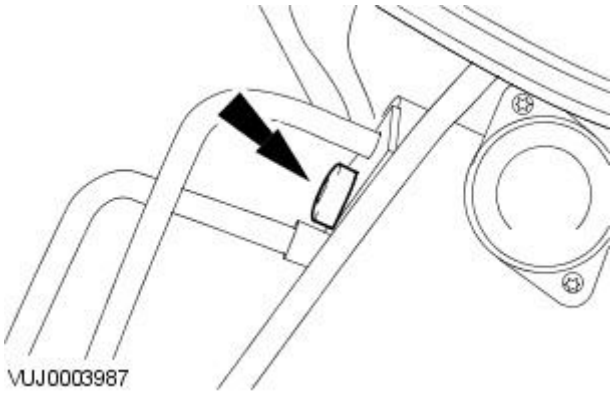

8. Attach the steering gear fluid lines.

- Tighten to 10 Nm.

9. Install the air deflector.
For additional information, refer to: Air Deflector - 2.0L Duratorq-TDCi/2.2L Duratorq-TDCi (110kW/150PS) - Puma (501-02 Front End Body Panels, Removal and Installation).

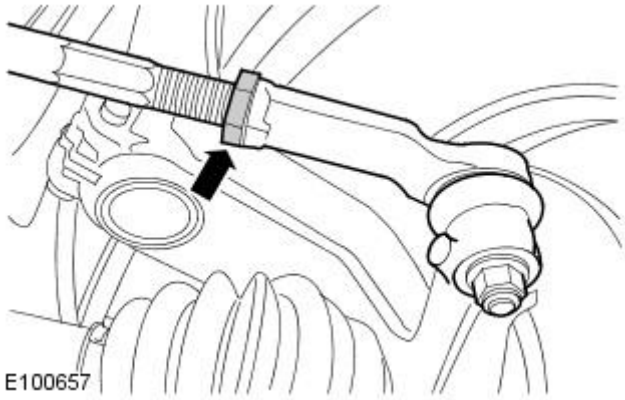

10. NOTE: Right-hand shown, Left hand similar.

Connect tie-rod end ball joints.

1. Attach both tie rods to previously noted positions.
2. Tighten the tie rod locking nut.

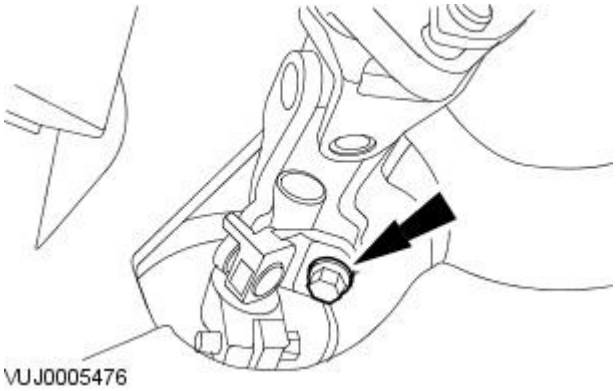

11. NOTE: Install a new bolt.

Attach the lower steering column.

- Tighten to 25 Nm.

12. Carry out steering system bleed procedure.
For additional information, refer to: Power Steering System Filling (211-00 Steering System - General Information, General Procedures).

13. NOTE: If the steering gear is being replaced for leakage or noise related issues and there is no evidence of fluid contamination, there is no need to replace the reservoir.

In some cases where the fluid clearly contains particulate matter, and the system continues to function, flush the system with fresh fluid and replace the reservoir, as there is the possibility that the reservoir internal filter may be damaged or faulty.

14. If a new steering gear has been installed carry out the front toe adjustment procedure.
For additional information, refer to: Front Toe Adjustment (204-00 Suspension System - General Information, General Procedures).

Power Steering - Steering Gear2.0L NA V6 - AJV6 / 2.5L NA V6 - AJV6 / 3.0L NA V6 - AJ27

Removal and Installation

Special Tool(s)	
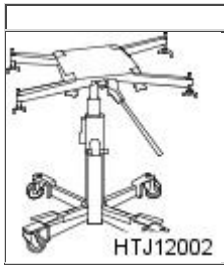 HTJ12002	Powertrain Assembly Jack HTJ1200-2

Removal

All vehicles

1. Center the steering wheel.
   - Lock in position and remove the ignition key.
2. Remove the steering column coupling.
   For additional information, refer to: Steering Column Coupling (211-04 Steering Column, Removal and Installation).

Right-hand drive vehicles

3. Remove the right-hand wheel arch liner access cover.

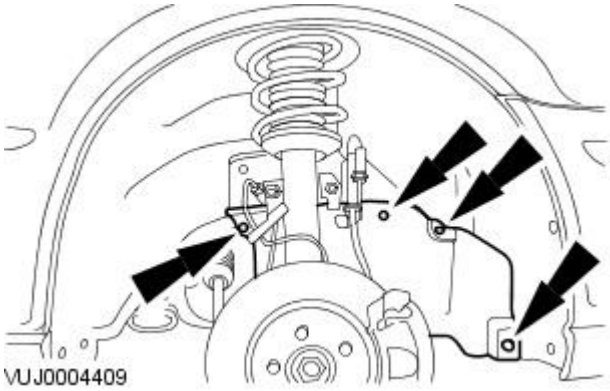
VUJ0004409

All vehicles

4. NOTE: Right-hand shown, left-hand similar.

   Release both tie-rod end ball joints.

   1. Loosen the locknuts.
   2. Release both track rods from the tie rod ends, note number of turns for installation.

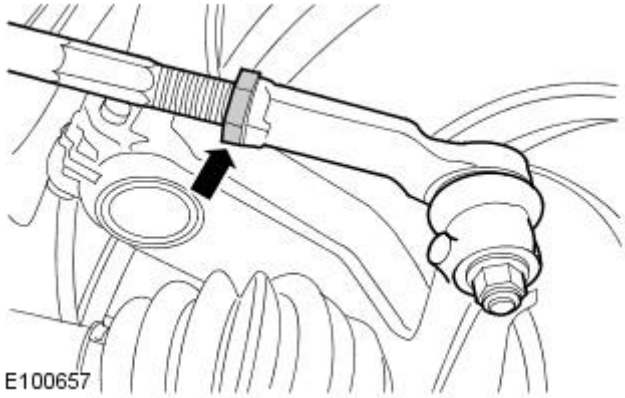
E100657

5. Disconnect the power steering control valve actuator electrical connector (if equipped).

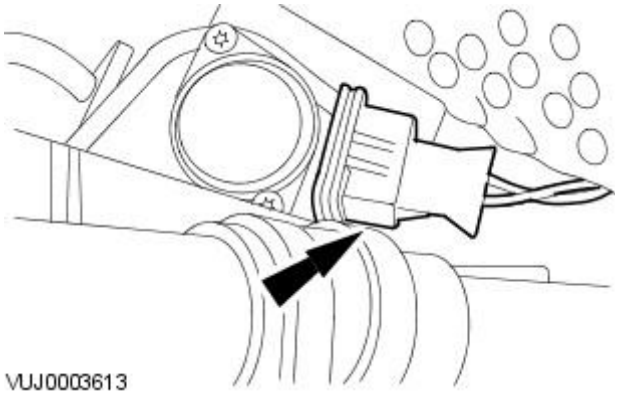
VUJ0003613

Vehicles with high intensity discharge headlamps

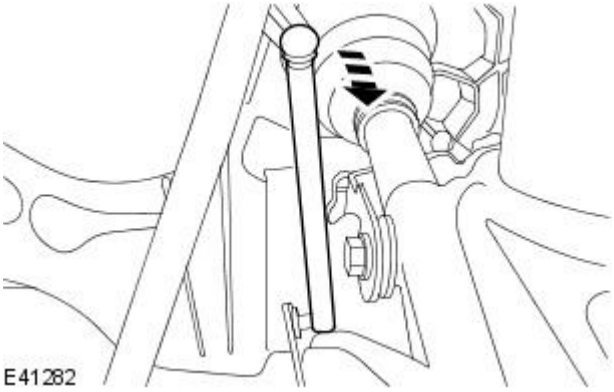

6. Detach the link rod from the headlamp leveling sensor.

All vehicles

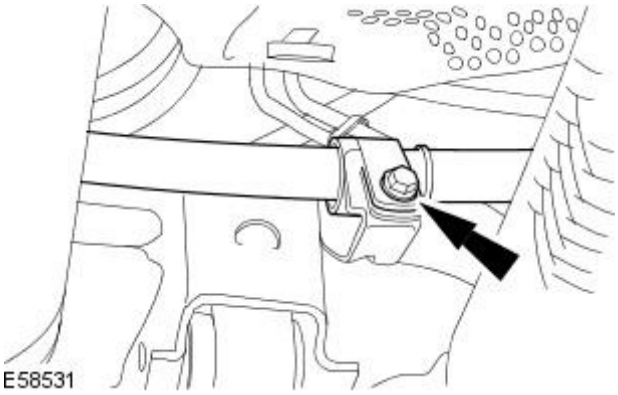

7. Detach the power steering high pressure pipe.

Vehicles with automatic transmission

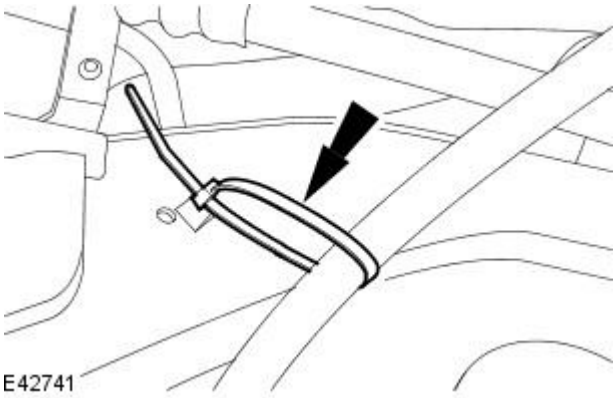

8. Detach the selector lever cable.

All vehicles

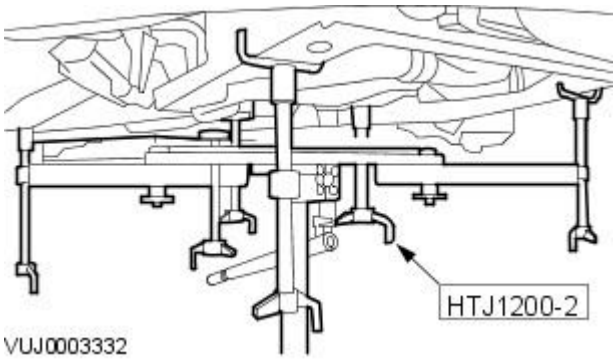

9. Install the special tool.

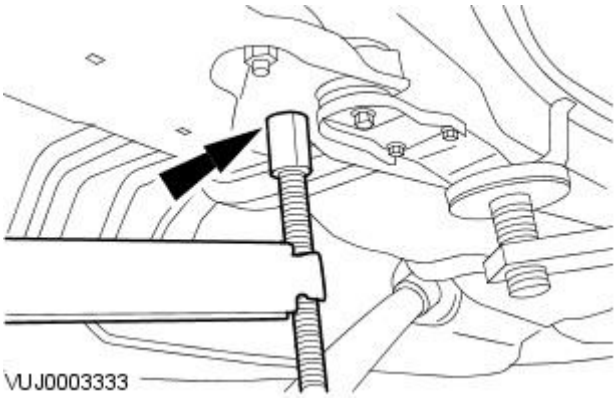

10. NOTE: Left-hand shown, right-hand similar.

Position and adjust the special tool rear height adjuster.

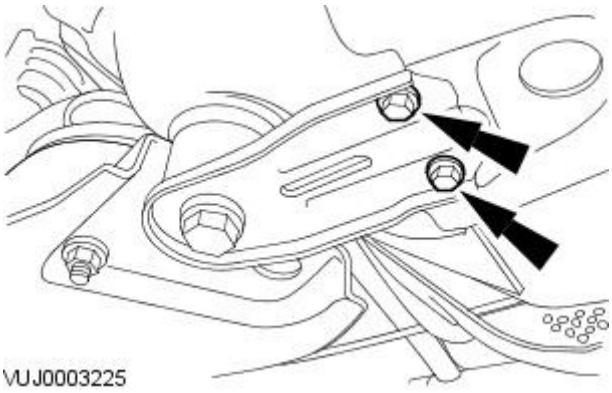

11. NOTE: Left-hand shown, right-hand similar.

Remove the front subframe reinforcement plate retaining bolts.

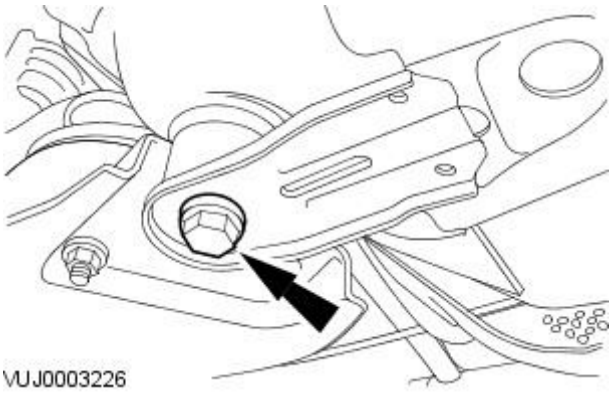

12. NOTE: Left-hand shown, right-hand similar.

Remove the front subframe rear mount retaining bolts.

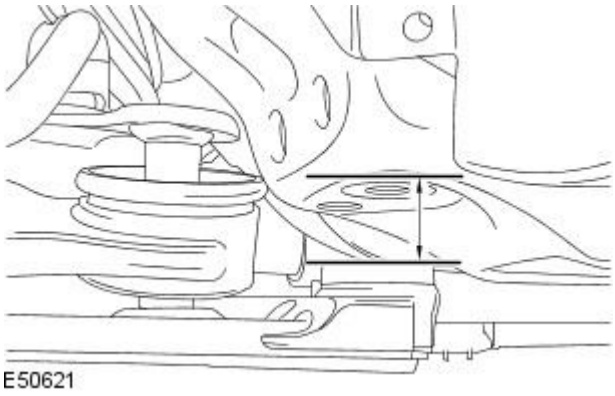

13. WARNING: Rotate the special tool height adjustment valve slowly. Failure to follow this instruction may result in personal injury.

Using the special tool, lower the front subframe to a maximum of 50 mm (1.97 inches).

Left-hand drive vehicles

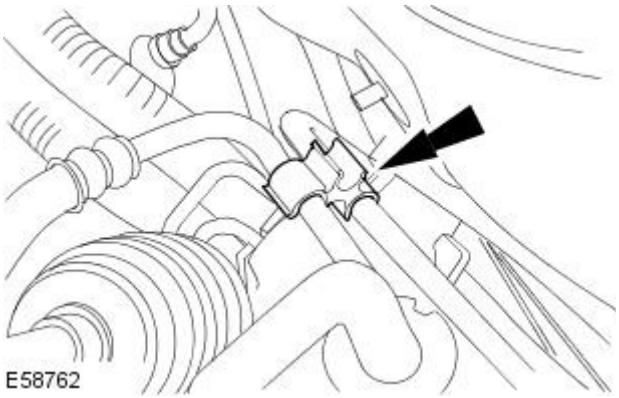

14. Remove the retaining clip from the power steering high and low pressure pipes.

All vehicles

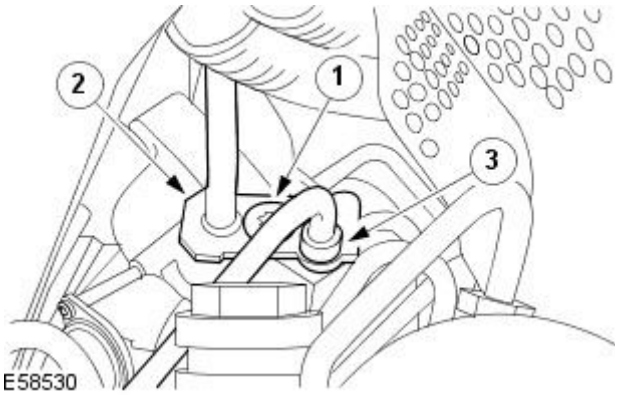

15. CAUTION: Whenever the power steering pipes are disconnected, the steering gear valve body ports and power steering pipes should be plugged to prevent dirt ingress. Failure to follow this instruction may result in damage to the vehicle.

- NOTE: Left-hand drive vehicles shown, right-hand drive vehicles similar.

Disconnect the power steering high and low pressure pipes from the steering gear.

1. Remove the latch plate retaining bolt.
2. Disconnect the power steering high pressure pipe.
3. Disconnect the power steering low pressure pipe.

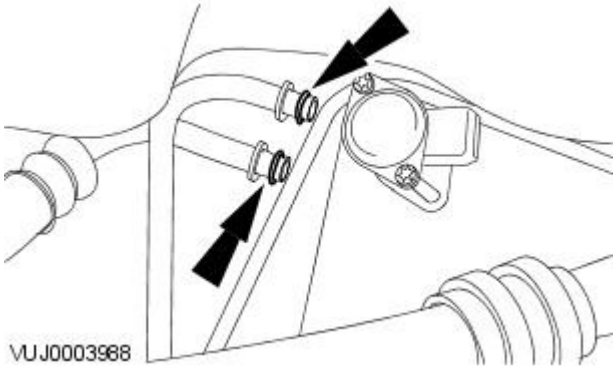

16. Remove and discard the O-ring seals.

Right-hand drive vehicles

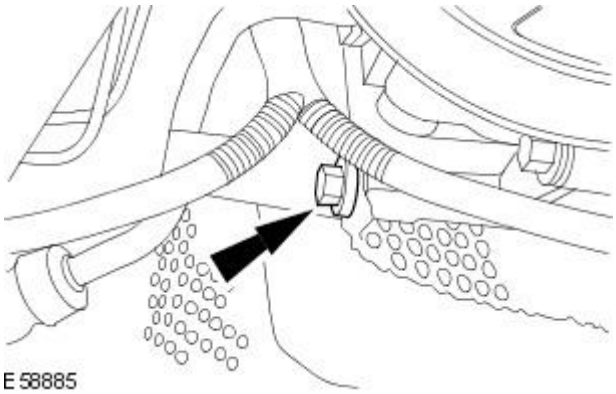

17. Remove the power steering high pressure pipe bracket retaining bolt.

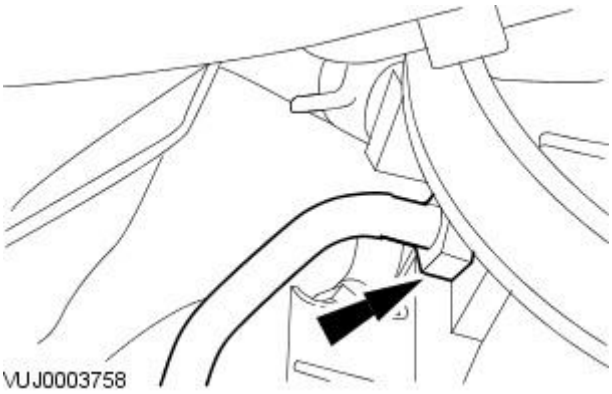

18. CAUTION: Whenever the power steering high pressure pipe is disconnected, the power steering pump port and pipe should be plugged to prevent dirt ingress. Failure to follow this instruction may result in damage to the vehicle.

Disconnect the power steering high pressure pipe from the power steering pump.

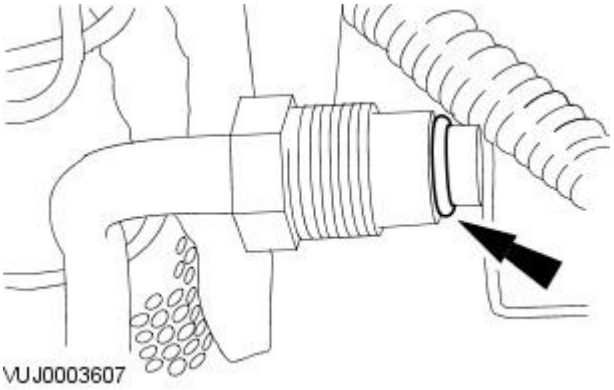

19. Remove and discard the O-ring seal.

All vehicles

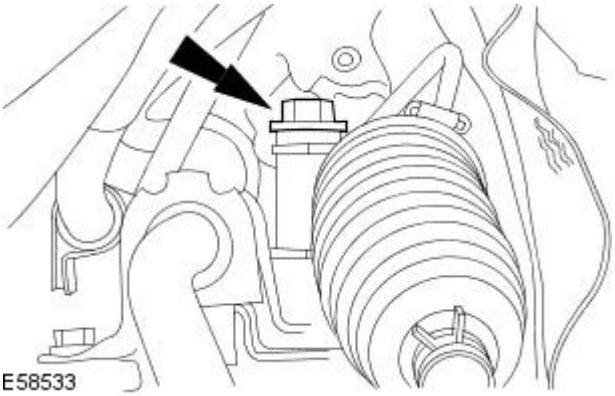

20. NOTE: Left-hand drive vehicles shown, right-hand drive vehicles similar.

Detach the right-hand side of the steering gear.

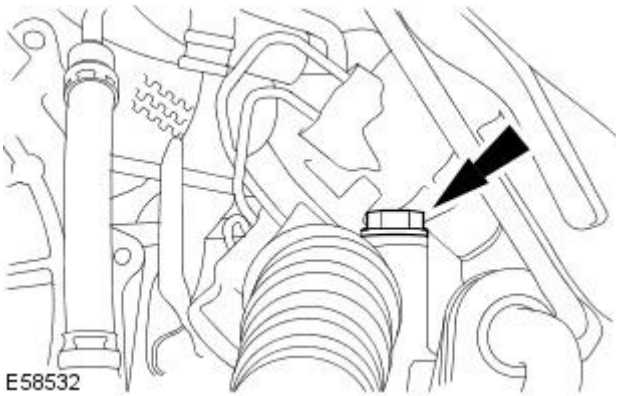

21. NOTE: Left-hand drive vehicles shown, right-hand drive vehicles similar.

Detach the left-hand side of the steering gear.

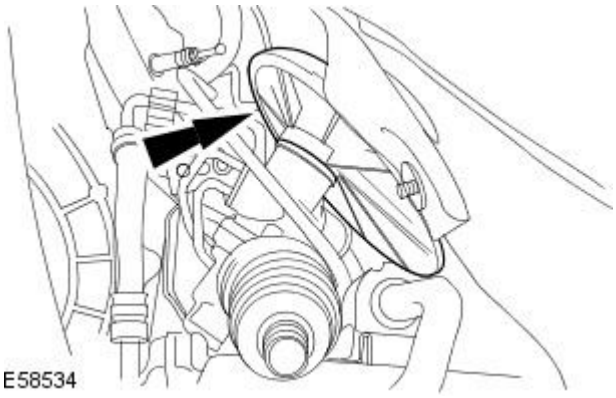

22. NOTE: Left-hand drive vehicles shown, right-hand drive vehicles similar.

Remove the steering gear bulkhead seal.

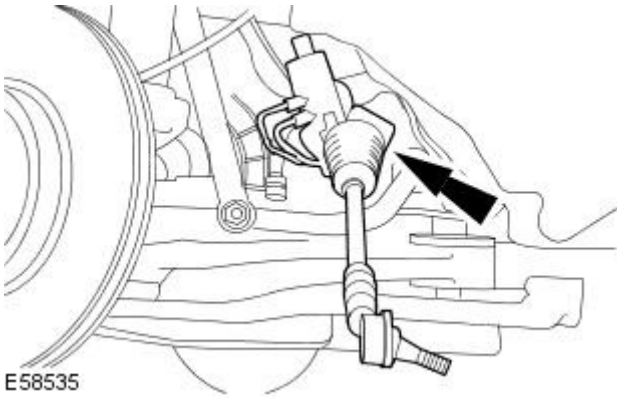

23. NOTE: Left-hand drive vehicles shown, right-hand drive vehicles similar.

Remove the steering gear.

- Rotate the steering gear.
- Remove the steering gear through the driver side wheel arch aperture .

Installation

All vehicles

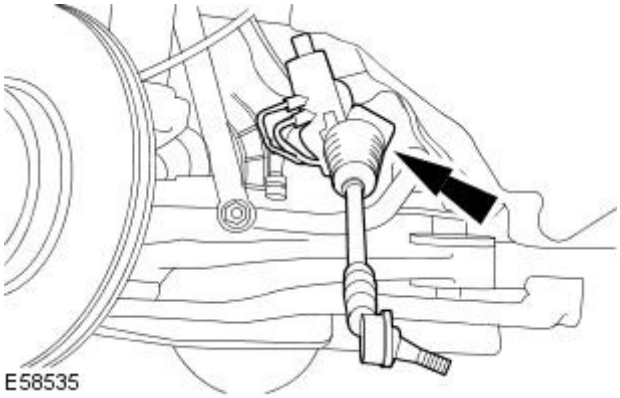

1. NOTE: Left-hand drive vehicles shown, right-hand drive vehicles similar.

Install the steering gear.

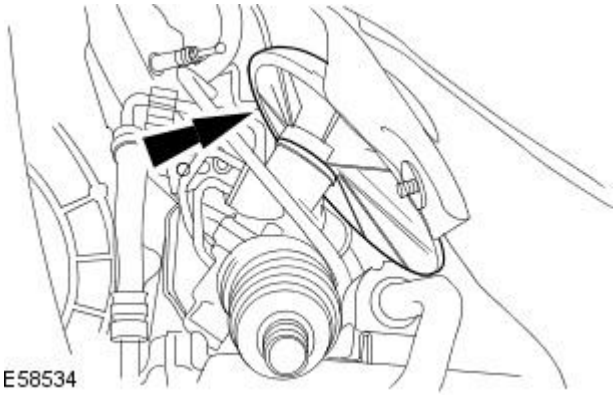

2. CAUTION: Make sure the steering gear bulkhead seal is correctly aligned. Failure to follow this instruction may result in damage to the vehicle.

• NOTE: Left-hand drive vehicles shown, right-hand drive vehicles similar.

Install the steering gear bulkhead seal.

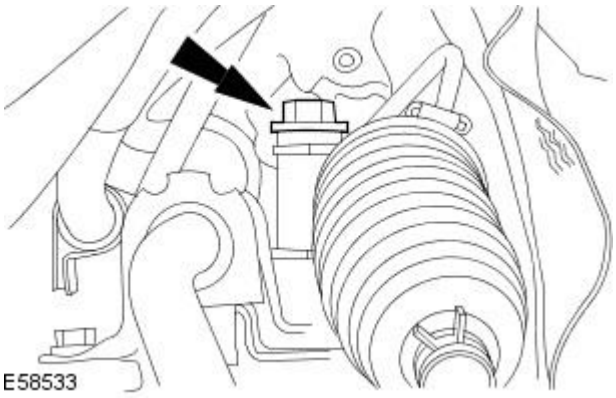

3. NOTE: Left-hand drive vehicles shown, right-hand drive vehicles similar.

Attach the right-hand side of the steering gear.

- Loosely install the steering gear retaining bolt.

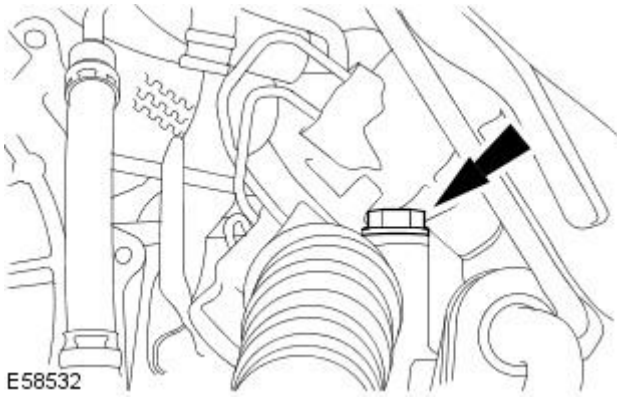

4. NOTE: Left-hand drive vehicles shown, right-hand drive vehicles similar.

Attach the left-hand side of the steering gear.

- Loosely install the steering gear retaining bolt.

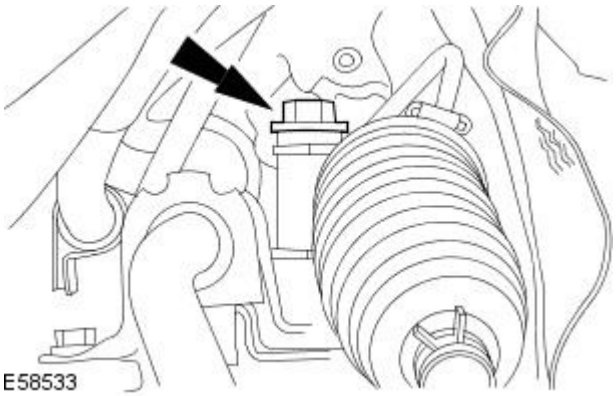

5. NOTE: Left-hand drive vehicles shown, right-hand drive vehicles similar.

Tighten the right-hand side steering gear retaining bolt.

- Tighten to 115 Nm.

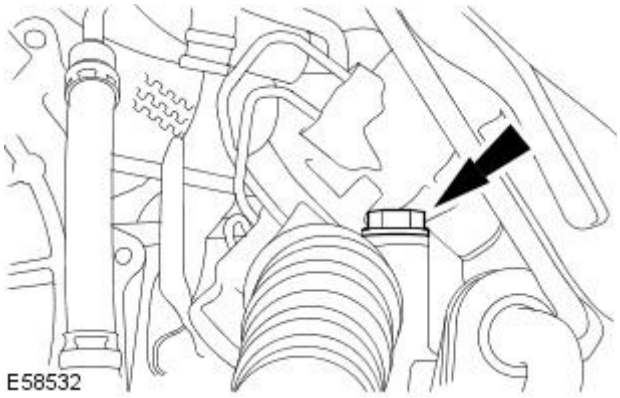

6. NOTE: Left-hand drive vehicles shown, right-hand drive vehicles similar.

Tighten the left-hand side steering gear retaining bolt.

- Tighten to 115 Nm.

Right-hand drive vehicles

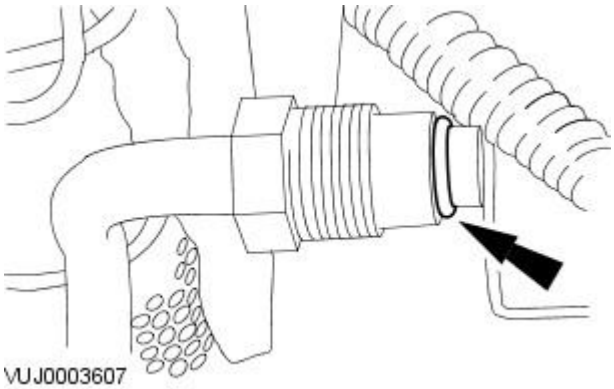

7. NOTE: Remove the blanking plug.

Install a new O-ring seal.

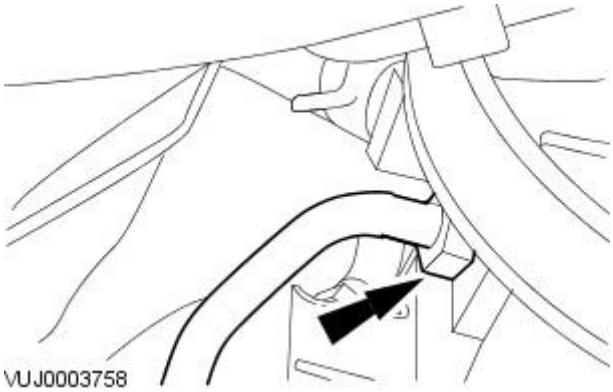

8. NOTE: Remove the blanking plug.

Connect the power steering high pressure pipe to the power steering pump.

- Tighten to 30 Nm

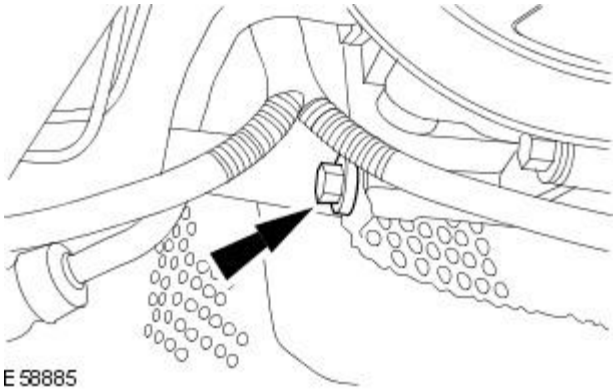

9. Install the power steering high pressure pipe bracket retaining bolt.

- Tighten to 25 Nm

All vehicles

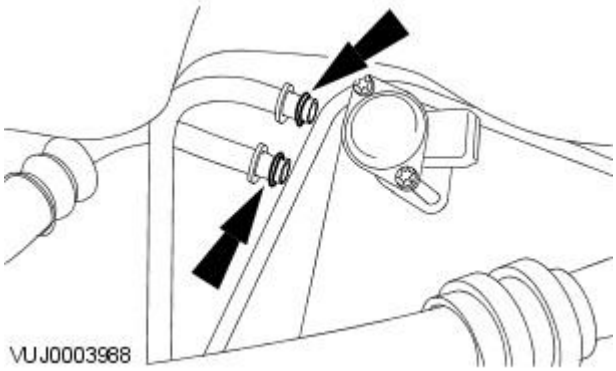

10. Install new O-ring seals.

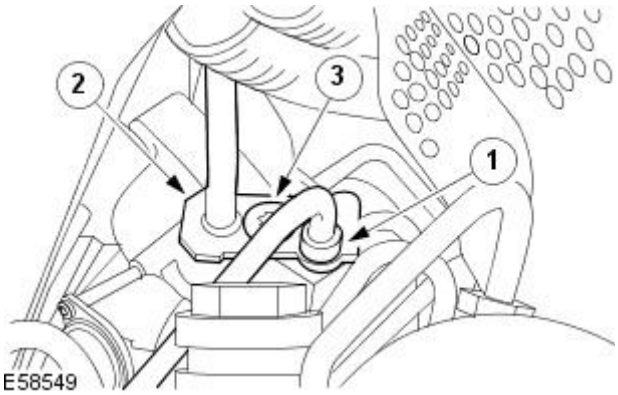

11. NOTE: Left-hand drive vehicles shown, right-hand drive vehicles similar.

• NOTE: Remove the blanking plugs.

Connect the power steering high and low pressure pipes to the steering gear.

1. Connect the power steering low pressure pipe.
2. Connect the power steering high pressure pipe.
3. Install the latch plate retaining bolt
   1. Tighten to 10 Nm.

Left-hand drive vehicles

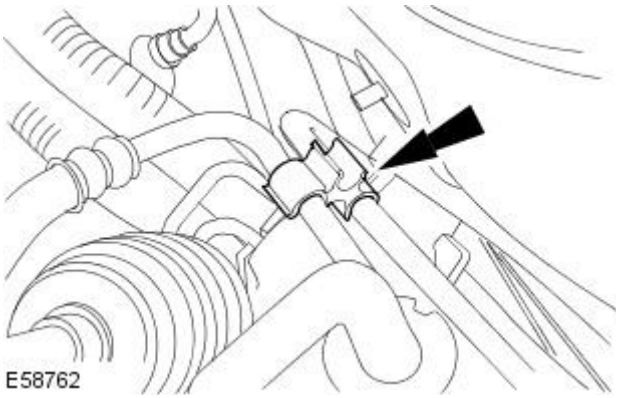

12. Install the retaining clip to the power steering high and low pressure pipes.

All vehicles

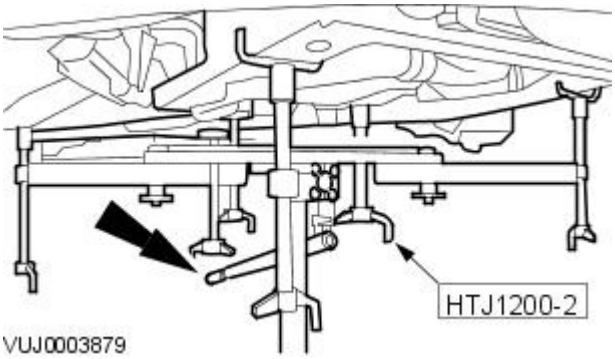

13. Using the special tool raise the front subframe.

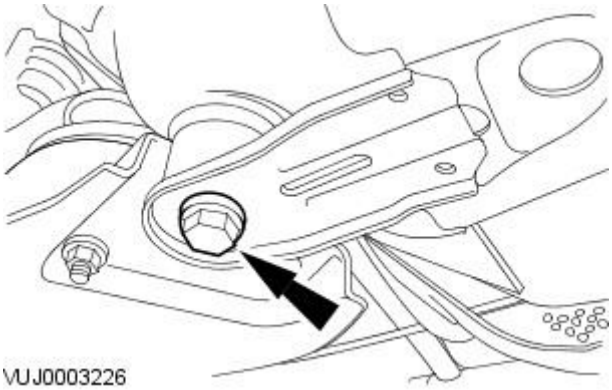

14. NOTE: Left-hand shown, right-hand similar.

Loosely install the front subframe rear mount retaining bolts.

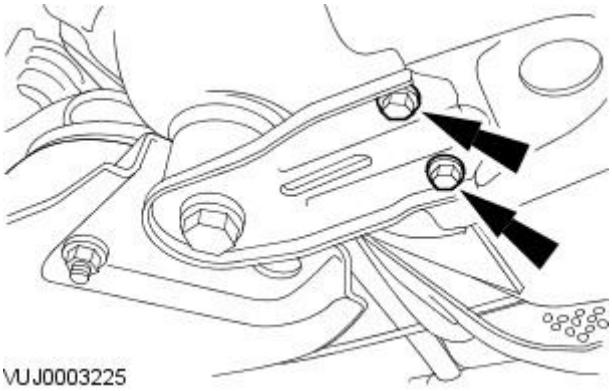

15. NOTE: Left-hand shown, right-hand similar.

Loosely install the front subframe reinforcement plate retaining bolts.

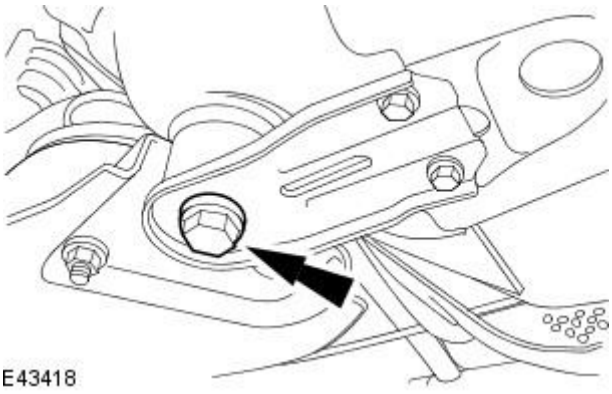

16. NOTE: Left-hand shown, right-hand similar.

Tighten to 142 Nm.

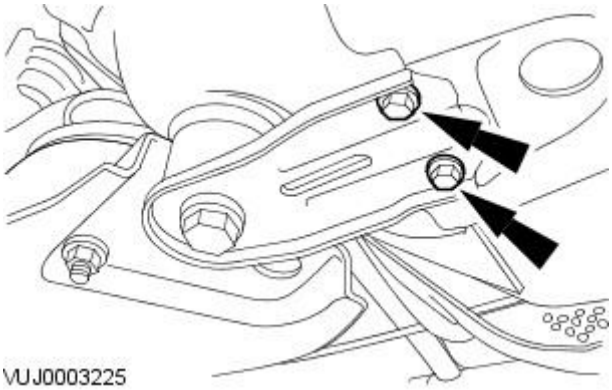

17. NOTE: Left-hand shown, right-hand similar.

Tighten the front subframe reinforcement bolts.

- M8 to 35 Nm.
- M10 to 70 Nm.

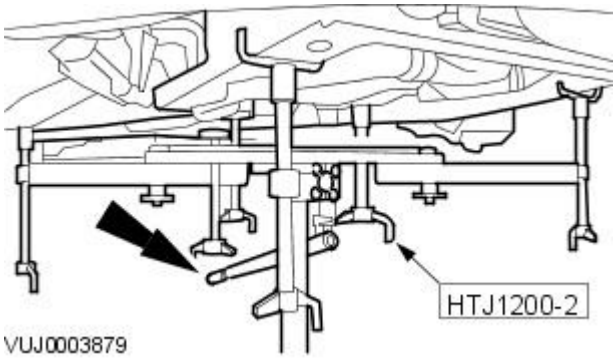

18. Remove the special tool.

Vehicles with automatic transmission

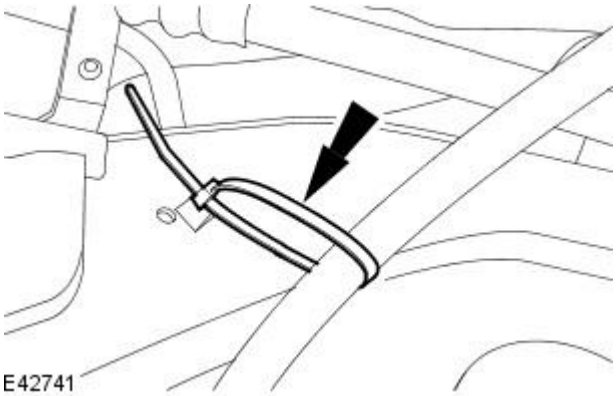

19. Attach the selector lever cable.

All vehicles

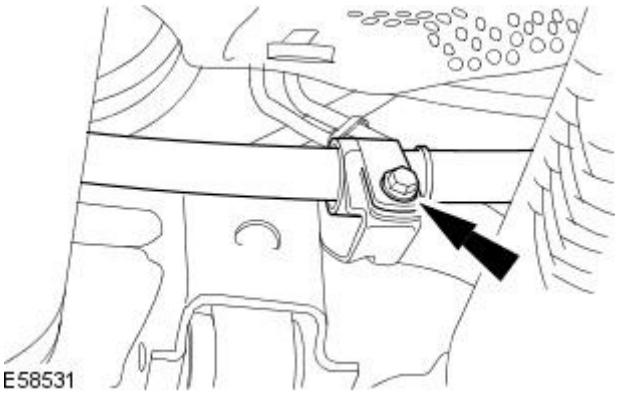

20. Attach the power steering high pressure pipe.

Vehicles with high intensity discharge headlamps

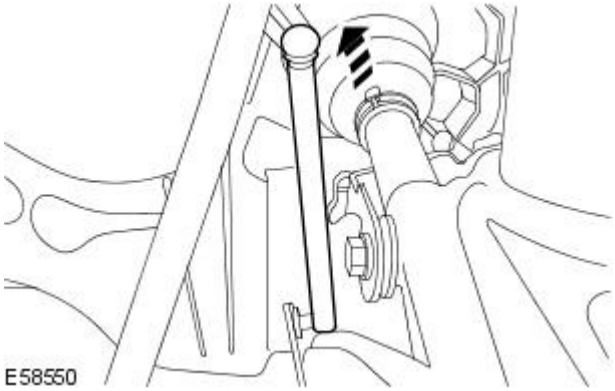

21. Attach the link rod to the headlamp leveling sensor.

All vehicles

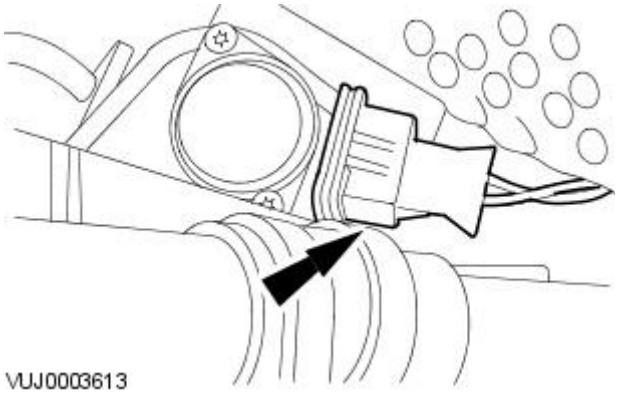

22. Connect the power steering control valve actuator electrical connector (if equipped).

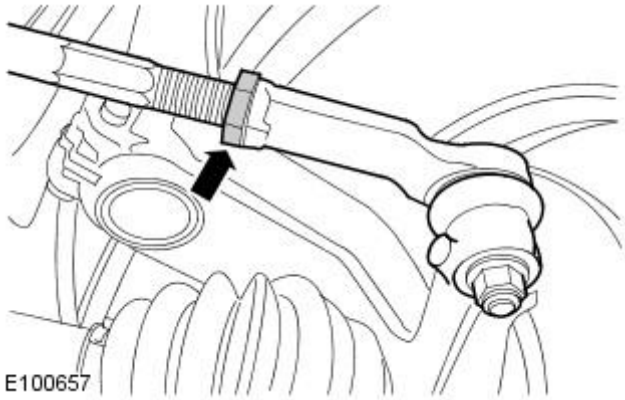

23. NOTE: Right-hand shown, left-hand similar.

Connect tie-rod end ball joints.

1. Attach both tie rod ends to previously noted positions.
2. Tighten tie rod locking nut.

Right-hand drive vehicles

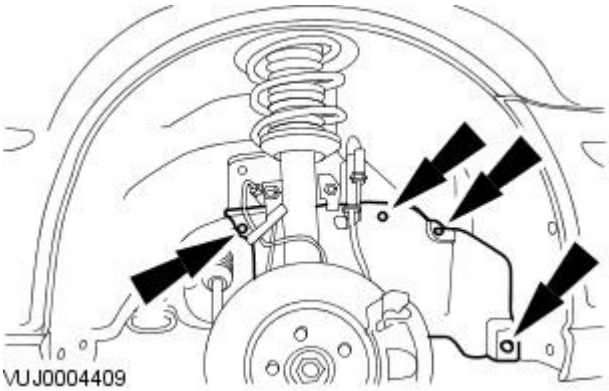

24. Install the right-hand wheel arch liner access cover.

All vehicles

25. Carry out steering system bleed procedure.
For additional information, refer to: Power Steering System Filling (211-00 Steering System - General Information, General Procedures).

26. CAUTION: Make sure the steering column coupling is installed with the vehicle on its wheels. Failure to follow this instruction may result in damage to the vehicle.

Install the steering column coupling.
For additional information, refer to: Steering Column Coupling (211-04 Steering Column, Removal and Installation).

27. NOTE: If the steering gear is being replaced for leakage or noise related issues and there is no evidence of fluid contamination, there is no need to replace the reservoir.

In some cases where the fluid clearly contains particulate matter, and the system continues to function, flush the system with fresh fluid and replace the reservoir, as there is the possibility that the reservoir internal filter may be damaged or faulty.

28. Using the Jaguar approved diagnostic system, configure the steering angle sensor.

Steering Linkage -

Torque Specifications

Description	Nm	lb-ft	lb-in
Tie-rod end retaining nut	35	26	-
Tie-rod end lock nut	40	30	-
Wheel nuts - Vehicles with steel wheels	80	59	-
Wheel nuts - Vehicles with aluminium wheels	103	76	-

Steering Linkage - Steering Linkage

Description and Operation

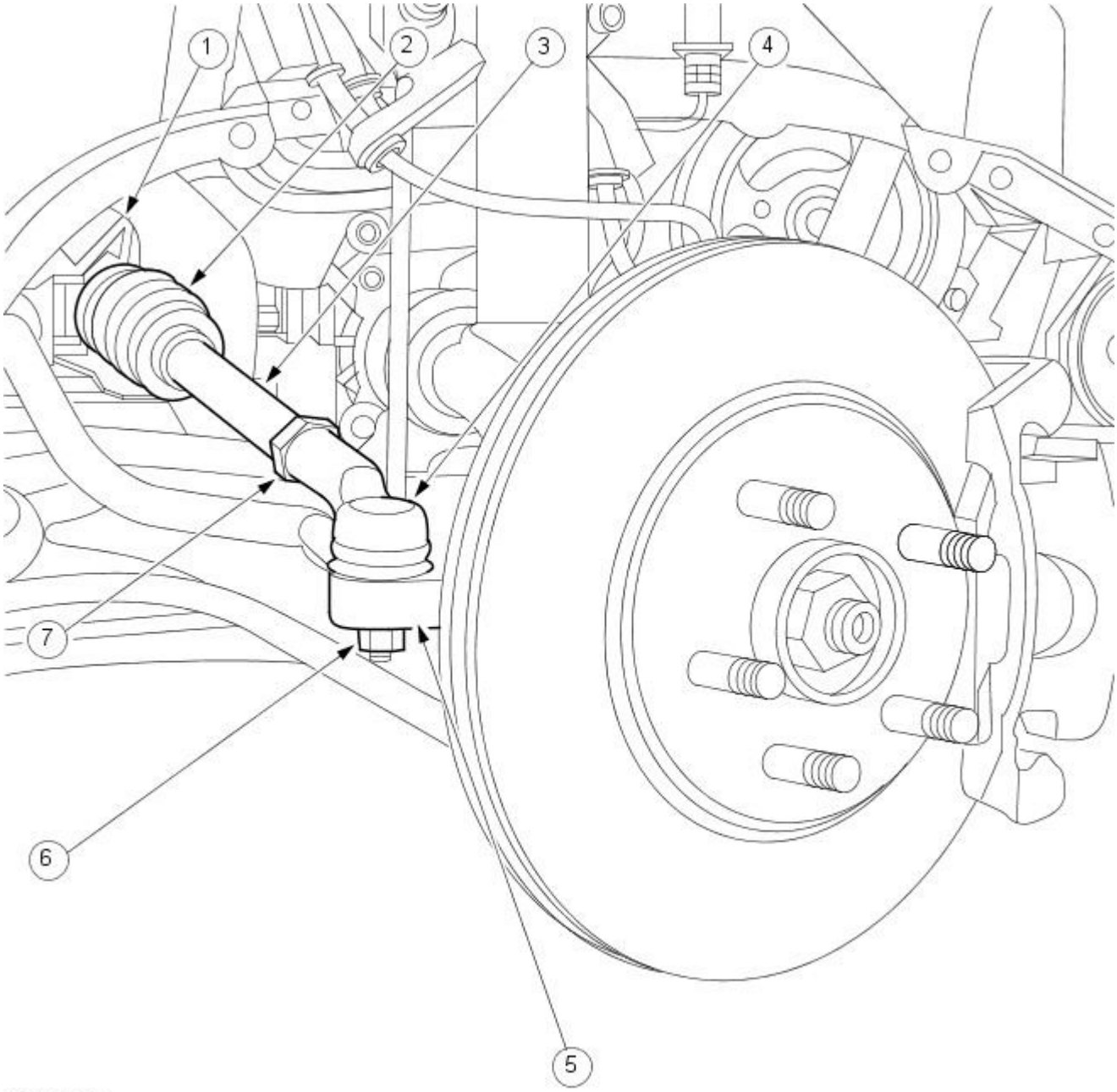

VUJ0003799

Item	Part Number	Description
1	—	Steering gear
2	—	Tie-rod end boot
3	—	Tie-rod
4	—	Tie-rod end
5	—	Wheel hub assembly
6	—	Tie-rod end retaining nut
7	—	Tie-rod end lock nut

The left and right-hand tie-rod assemblies:

- Transmit steering forces from the steering gear to the wheel hubs.
- Provide front road wheel toe setting by adjustment of the threaded outer tie-rod ends.

• NOTE: Steering geometry adjustments must only be carried out with the vehicle on turn plates to allow the wheels to move during adjustment.

The left and right-hand steering rack boots:

- Are installed between the steering rack and the tie-rod ends.
- Are of the concertina type.
- Retain lubricant and prevent the ingress of foreign matter.

Published: 11-May-2011

Steering Linkage - Steering Linkage

Diagnosis and Testing

For additional information, refer toSection 211-00 Steering System - General Information.

Steering Linkage - Steering Gear Boot

Removal and Installation

Removal

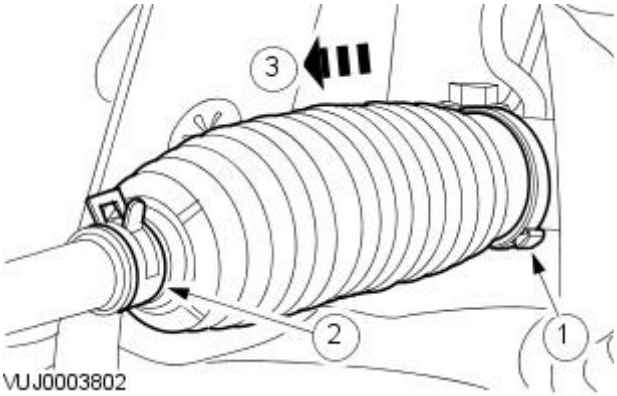

1. Remove the tie-rod end. For additional information, refer to procedure in this section: Tie Rod End

2. Remove the steering gear boot.

1. Remove and discard the steering gear boot retaining clamp.
2. Detach the steering gear boot retaining clamp.
3. Remove the steering gear boot.

Installation

1. CAUTION: Make sure the steering gear is clean before installing the boot.

To install, reverse the removal procedure.

- Install the steering gear boot using a new retaining clamp.

Steering Linkage - Tie Rod End

Removal and Installation

Special Tool(s)	
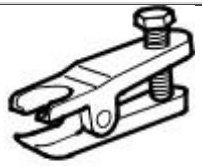 204-192	Seperator, Ball Joint 204-192 (JD-219)

Removal

1. Remove the wheel and tire. For additional information refer to Section 204-04 Wheels and Tires.
2. Loosen the tie-rod end lock nut.

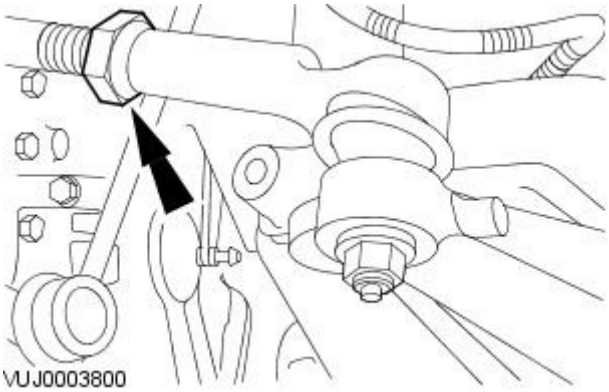

3. Remove the tie-rod end retaining nut.

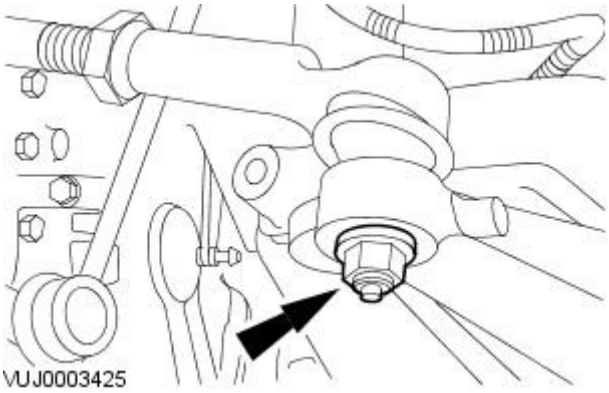

4. NOTE: When the tie-rod end is seperated from the wheel hub assembly, the ball joint seal should be protected to prevent damage.

   Using the special tool, detach the tie-rod end.

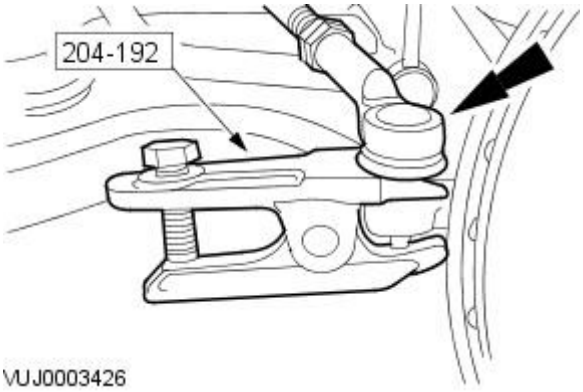

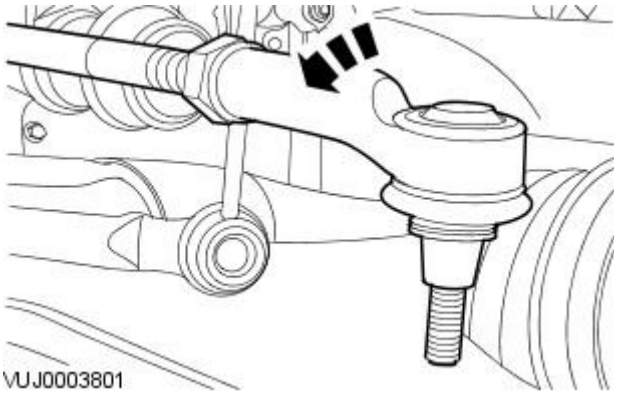

5. NOTE: Make a note of the number of turns required to remove the tie-rod end.

Remove the tie-rod end.

Installation

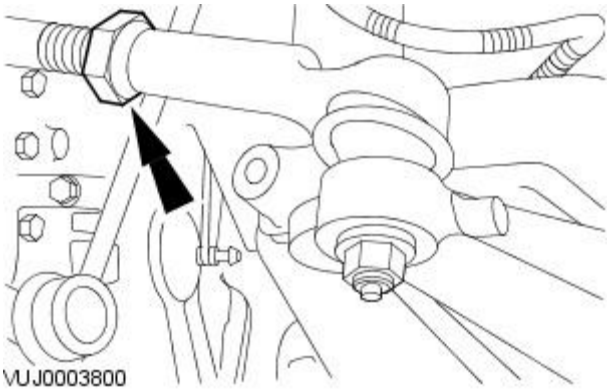

1. NOTE: Make sure the tie-rod end is installed on the tie-rod by the same amount of turns used to remove it.

To install, reverse the removal procedure.

- Tighten to 40 Nm.

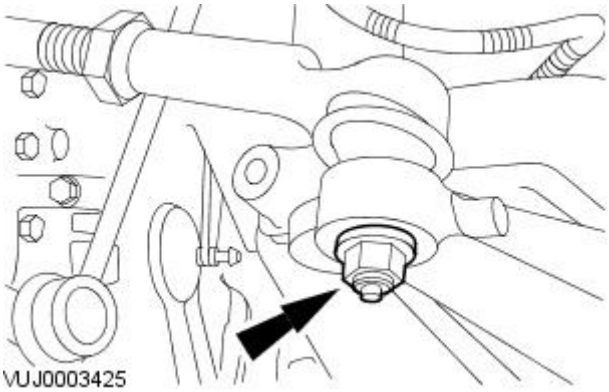

2. Tighten to 35 Nm.

3. Check the toe adjustment. For additional information, refer to Section 204-00 Suspension System - General Information.

Published: 11-May-2011

Steering Column -

Torque Specifications

Description	Nm	lb-ft	lb-in
Steering wheel retaining bolt	47	35	-
Steering column lower retaining bolt	25	18	-
Steering column retaining bolts	24	18	-
Steering column flexible coupling retaining bolt.	25	18	–

Steering Column - Steering Column

Description and Operation

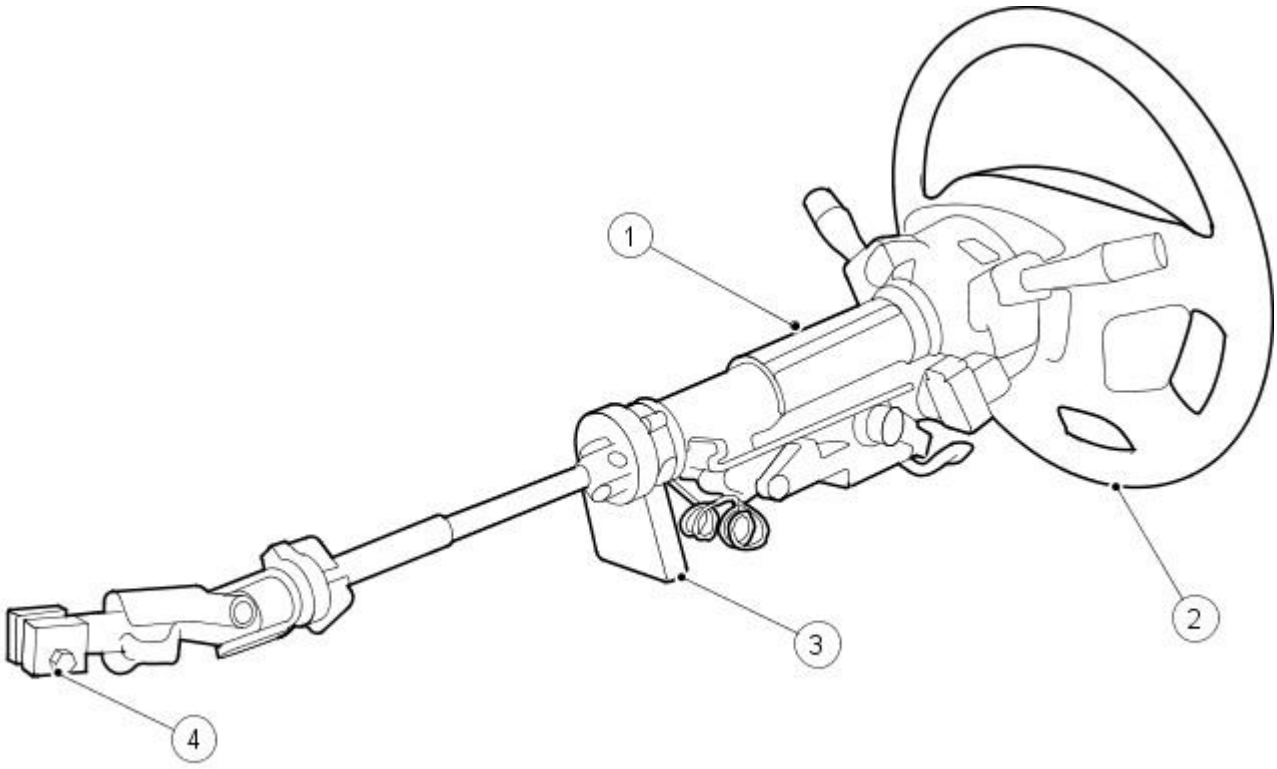

VUJ0005478

Item	Part Number	Description
1	—	Steering column
2	—	Steering wheel
3	—	Steering wheel angle sensor
4	—	Steering column flexible coupling

The steering column lock is secured to the upper casting of the steering column and consists of a locking pin. The steering column is locked and unlocked by inserting and removing the ignition key respectively.

The steering column has tilt and telescope functions. These allow the driver to manually set the steering column position by using the tilt/telescope lever, regardless of the ignition switch position. The steering column is capable of being tilted up or tilted down and telescoped in or out, and is unlocked and locked into position using a single lever located on the underside of the steering column.

The lower part of the steering column consists of two shafts. The lower flexible coupling shaft is attached to both the steering gear and the upper shaft.

No routine maintenance of the steering wheel is required. Any setting of steering wheel for misalignment must be achieved by adjusting the tie rods.

Published: 11-May-2011

Steering Column - Steering Column

Diagnosis and Testing

For additional information, refer to Section 211-00 Steering System - General Information.

Steering Column - Ignition Switch Lock Cylinder

Removal and Installation

Removal

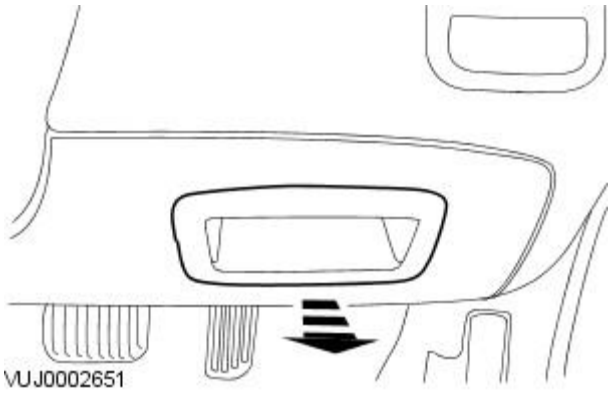

1. Remove the driver side instrument panel lower trim panel pocket.

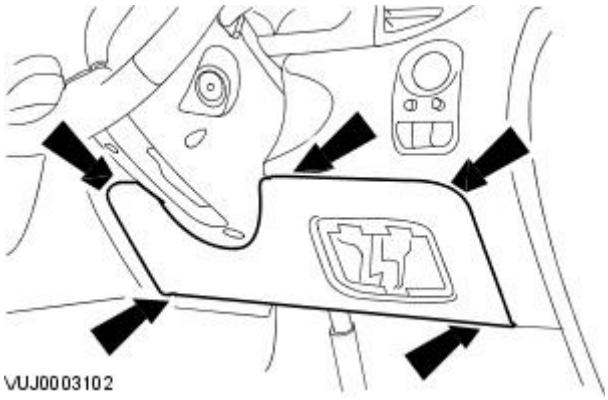

2. Remove the drivers side instrument panel lower trim panel.

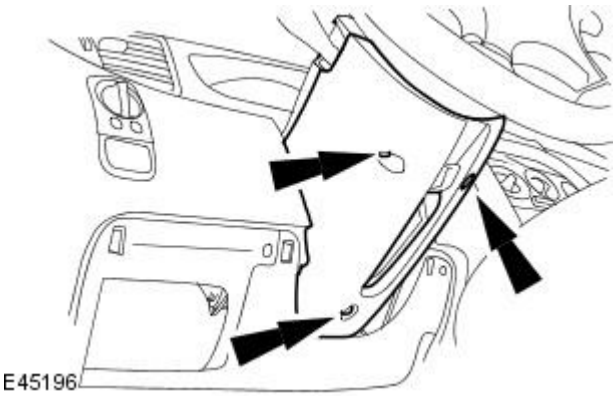

3. Remove the steering column lower shroud.

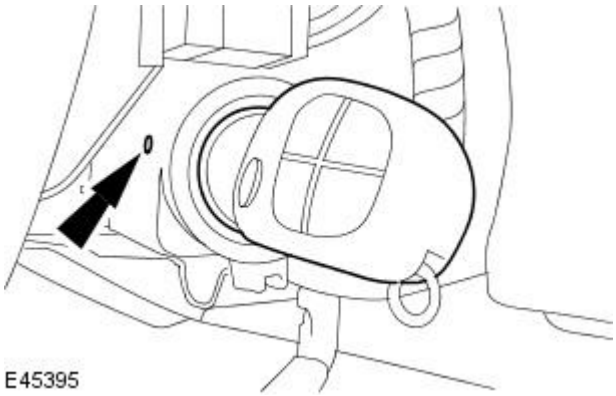

4. Remove the ignition switch lock cylinder.

- Turn the ignition key to position 1.
- Press the locking pin.
- Remove the ignition switch lock cylinder.

Installation

1. To install, reverse the removal procedure.

Steering Column - Steering Column

Removal and Installation

Removal

All vehicles

1. Remove the clockspring.
   For additional information, refer to: Clockspring (501-20B Supplemental Restraint System, Removal and Installation).

Vehicles without Driver Lower Airbag Module

2. Remove the driver side instrument panel lower trim panel.

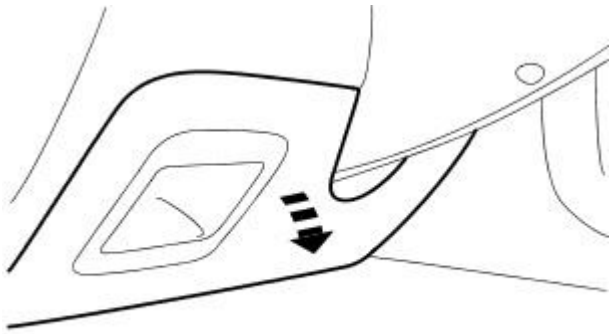

VUJ0004808

Vehicles with Driver Lower Airbag Module

3. Remove the driver lower airbag module.
   For additional information, refer to: Driver Lower Air Bag Module (501-20B Supplemental Restraint System, Removal and Installation).

All vehicles

4. Disconnect the ignition switch electrical connector.
   1. Disconnect the passive anti-theft system transceiver electrical connector.
   2. Disconnect the ignition switch electrical connector.

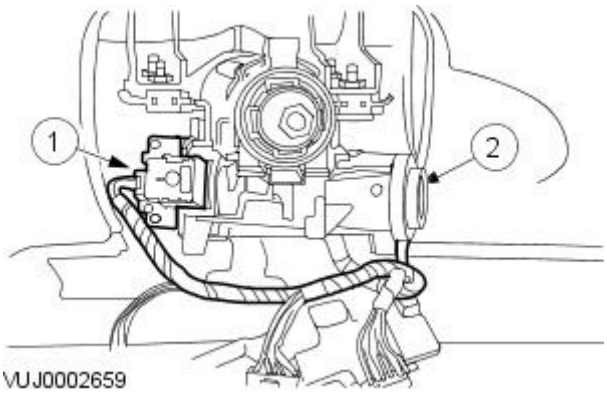

VUJ0002659

5. Reposition the steering column wiring harness bracket.
   - Remove the steering column wiring harness bracket retaining screw.

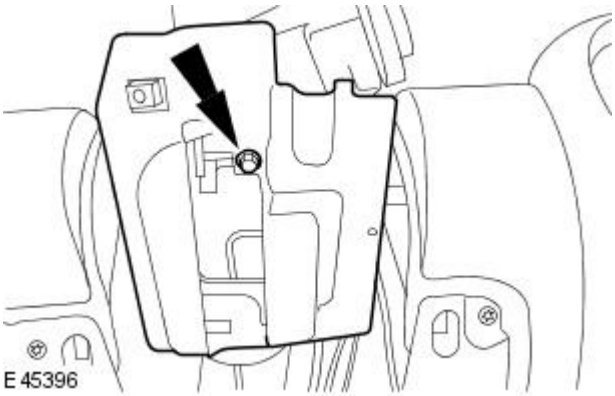

E 45396

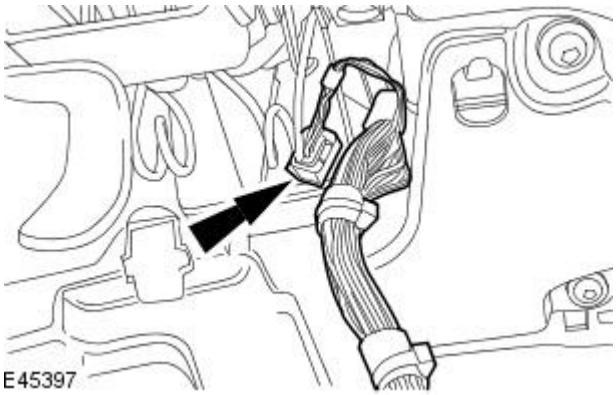

6. Disconnect the steering wheel rotation sensor electrical connector.

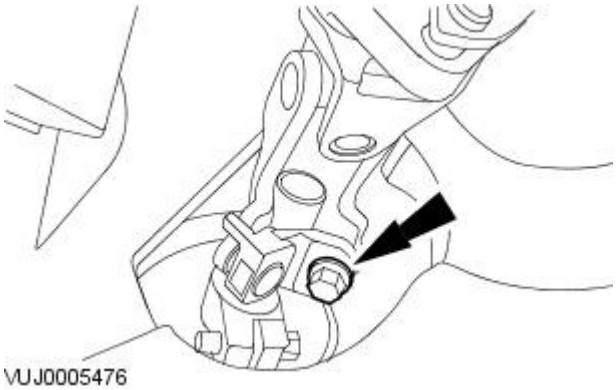

7. Remove and discard the steering column lower retaining bolt.

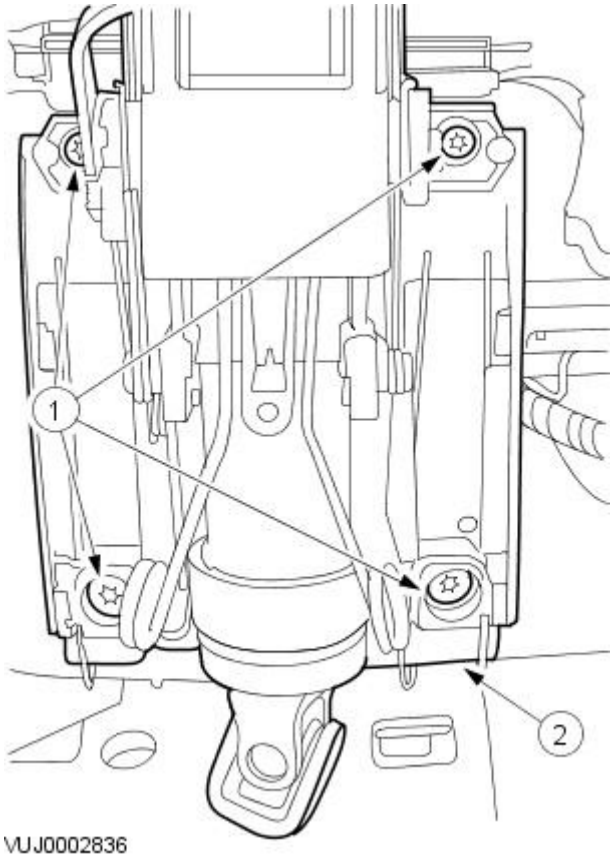

8. Remove the steering column.

1. Remove the steering column retaining bolts.
2. Remove the steering column.

Installation

1. To install, reverse the removal procedure.

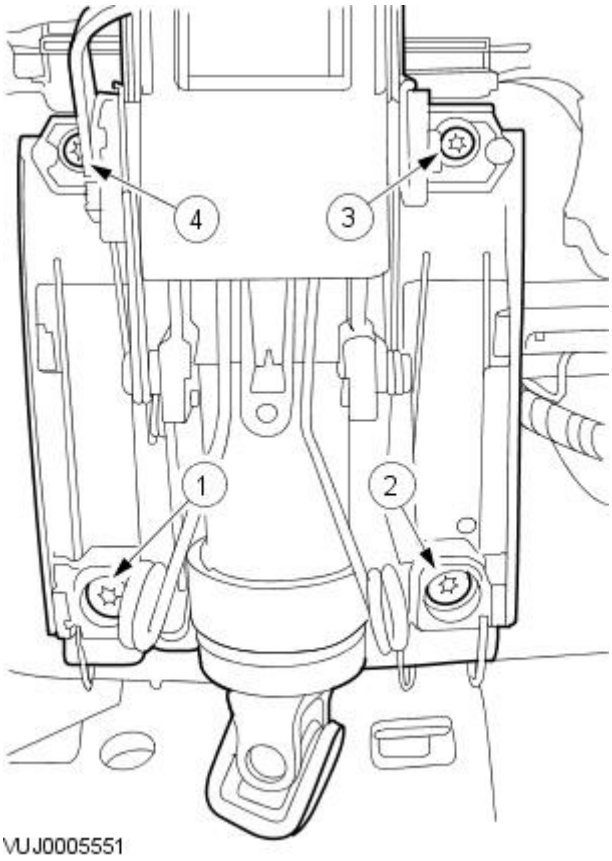

2. Tighten in the sequence shown.

- Tighten to 24 Nm.

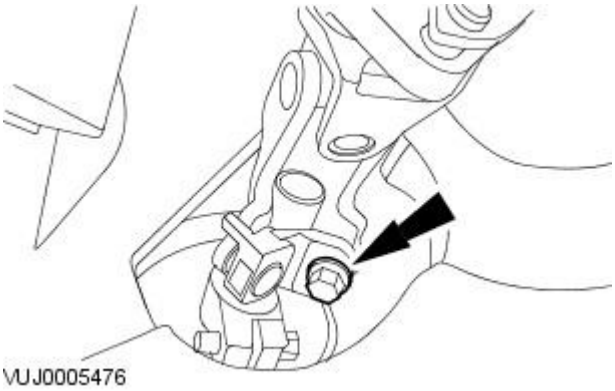

3. Install a new bolt.

- Tighten to 25 Nm.

Steering Column - Steering Column Coupling

Removal and Installation

Removal

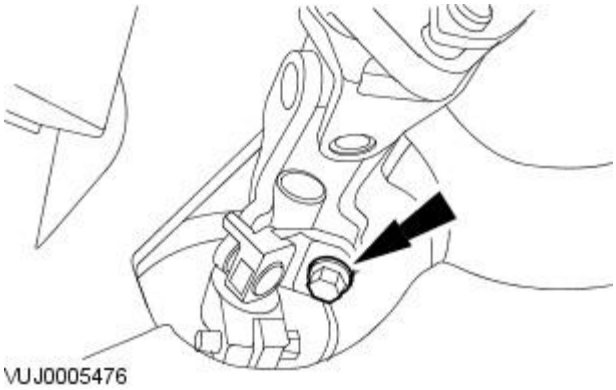

1. Remove and discard the steering column lower retaining bolt.

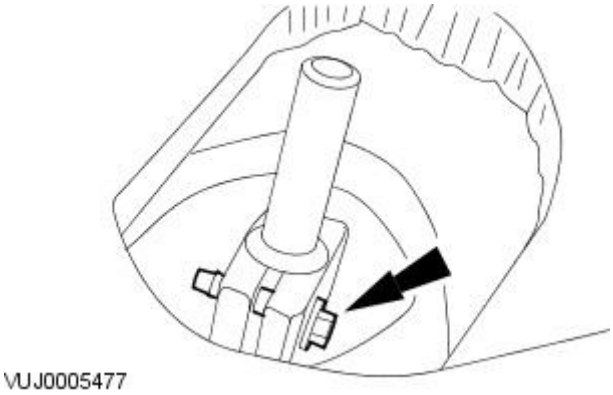

2. Remove the steering column coupling.

Installation

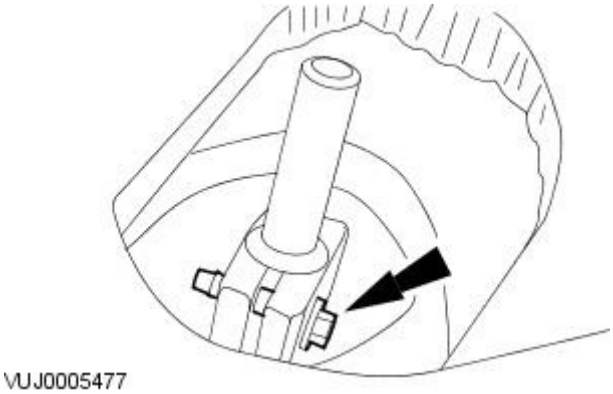

1. To install, reverse the removal procedure.

- Tighten to 25 Nm.

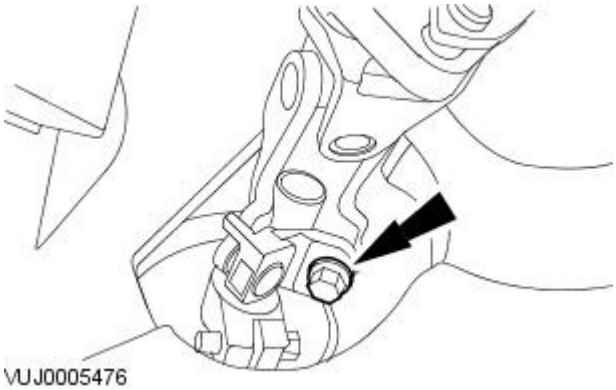

2. Install a new bolt.

- Tighten to 25 Nm.

Steering Column - Steering Wheel

Removal and Installation

Removal

1. Position the front wheels in a straight ahead position and centralize steering wheel.
2. Remove the driver airbag module.
   For additional information, refer to: Driver Air Bag Module (501-20B Supplemental Restraint System, Removal and Installation).
3. Disconnect the electrical connector.

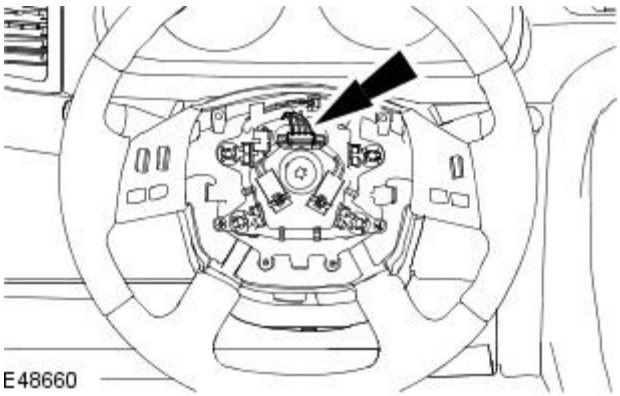

4. Remove the steering wheel.

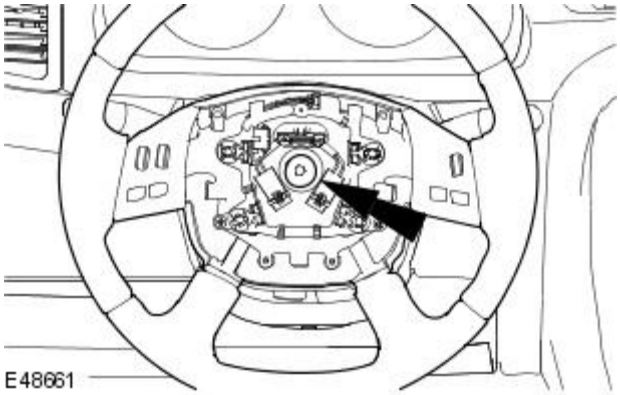

5. Using suitable insulation/masking tape, secure the clockspring to prevent movement from the centralized position.

Installation

1. To install, reverse the removal procedure.
   - Tighten to 47 Nm.

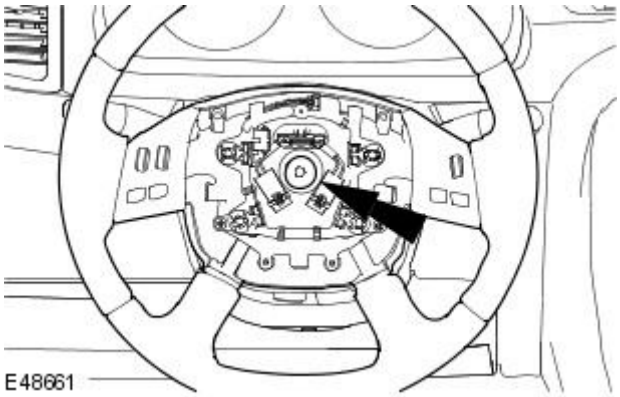

Published: 11-May-2011

Steering Column Switches - Steering Column Switches

Description and Operation

Steering Column Multifunction Switch RH

The steering column multifunction switch RH controls the following functions when the ignition switch is in position II:

Flick Wipe

Flick wipe operation:

- Is obtained by pulling the switch stalk towards the driver.
- Features continuous wipe action at slow speed while the switch stalk position is held.

Intermittent Wipe

In the intermittent wipe position:

- The wiper operates intermittently, with a variable time delay between wipes.
- The time delay may be varied by rotating the column switch collar. This switch has six positions and varies the delay between 1 and 22 seconds. The collar is turned counter-clockwise to increase the delay.

Slow Speed Wiper

In the slow speed position:

- The wiper operates continuously at slow speed.

High Speed Wiper

In the high speed position:

- The wiper operates continuously at high speed.

Windscreen Wash/Wipe

The wash/wipe function:

- Is operated by the button at the end of the switch stalk.
- If the switch stalk is in the off or intermittent position the washers will operate for the duration the button is being pressed. The wipers will operate at the slow speed while the button is being pressed and provides an additional three sweeps of the wipers after the button is released.
- If the switch stalk is in the flick, slow or high speed position the washers will operate for the duration the button is being pressed. The wipers will operate at the slow or high speed respectively while the button is being pressed.
- Is disabled if the 'Washer Fluid Low' message is displayed but manual operation is still available.

Headlamp Power Wash (if equipped)

The headlamp power wash function:

- Operates only when the headlamps are on and the windscreen wash/wipe button is pressed.
- Provides one short burst to the headlamps for approximately 0.5 of a second.

After the initial application, the headlamp power wash operates on every fifth operation of the wash/wipe button.

Rain Sensing/Auto Wipe (if equipped)

The rain sensing/auto wipe function:

- Operates if the wash/wipe switch is set to the intermittent position and the variable delay is adjusted to the minimum position. If any other position is selected the rain sensing function is disabled and the system reverts to the intermittent function with position two being the shortest delay.
- When rain sensing/auto wipe is selected the area of the windscreen covered by the rain sensor is monitored for moisture. If moisture is detected the wipers are activated. The speed of the wipers is dependent on the amount of moisture detected on the windscreen. When the windscreen is dry the wipers are parked until moisture is detected again.

Steering Column Multifunction Switch LH

The steering column multifunction switch LH controls the following functions when the ignition switch is in position II:

Direction Indicators

The direction indicators:

- Operate when the ignition switch is in position II.
- Are operated by moving the switch stalk up or down until it latches in position to indicate a right or left turn respectively.
- May be operated while the switch stalk is held against spring pressure before reaching the latched position.
- Cancel automatically upon completion of a turn. The multifunction switch LH stalk then returns to the center position.

An audible ticking and a flashing green warning lamp on the instrument cluster indicates that the direction indicators are operating. If an indicator bulb fails, the warning lamp and ticking operate at twice the normal rate.

Main Beam

The main beam switch has two pull positions. Operating the switch to the first position and then releasing it will cause the main beam to flashed. The main beam can be flashed with the ignition on or off and will remain activated as long as the switch is held.

Operating the switch to the second position will operate main beam continuously if the headlamps are on.

Published: 11-May-2011

Steering Column Switches - Steering Column Switches

Diagnosis and Testing

Inspection and Verification

1. **1.** Verify the customer concern.
2. **2.** Visually inspect for obvious signs of electrical damage.

Visual Inspection Chart

Electrical
• Wiring harness for damage or corrosion • Electrical connector(s) • Switch(s) • Relay(s) • Module

3. **3.** If an obvious cause for an observed or reported concern is found, correct the cause (if possible) before proceeding to the next step.
4. **4.** If the cause is not visually evident, verify the symptom and refer to the Jaguar Approved Diagnostic System.

Steering Column Switches - Steering Column Multifunction Switch LH

Removal and Installation

Removal

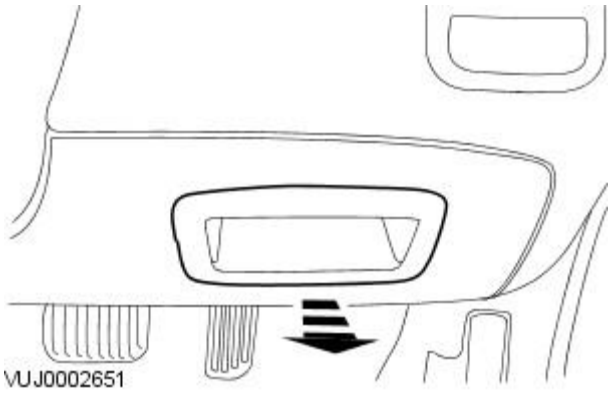

1. Remove the driver side instrument panel lower trim panel pocket.

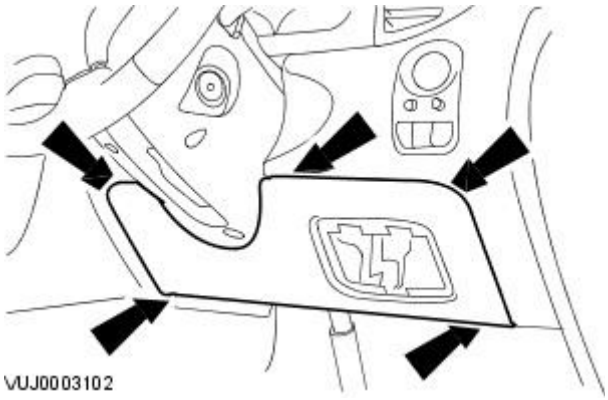

2. Remove the driver side instrument panel lower trim panel.

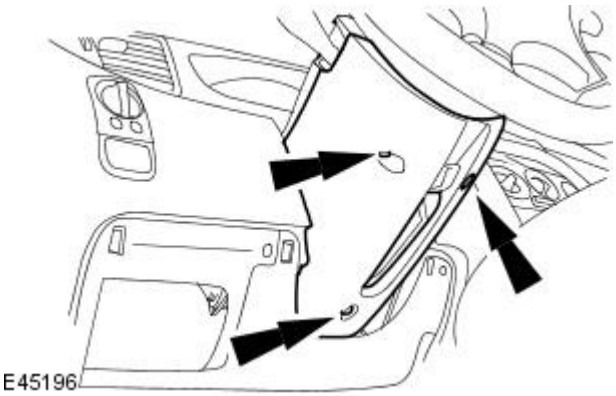

3. Remove the steering column lower shroud.

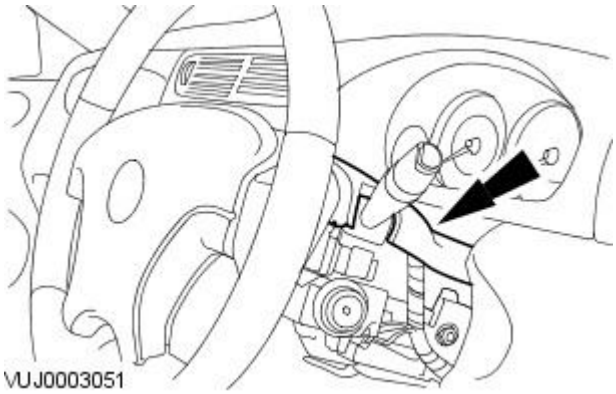

4. Remove the steering column upper shroud.

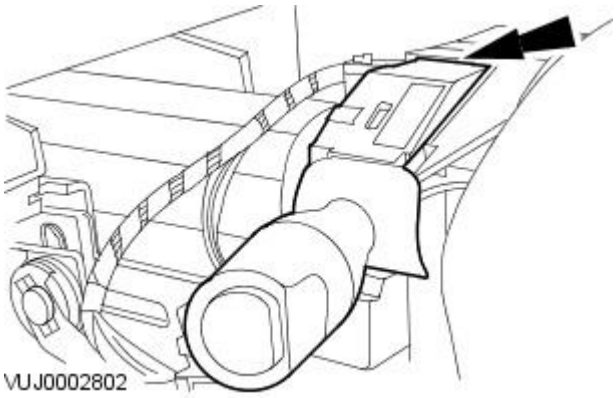

5. Detach the steering column multifunction switch left-hand.

- Release the retaining tang.

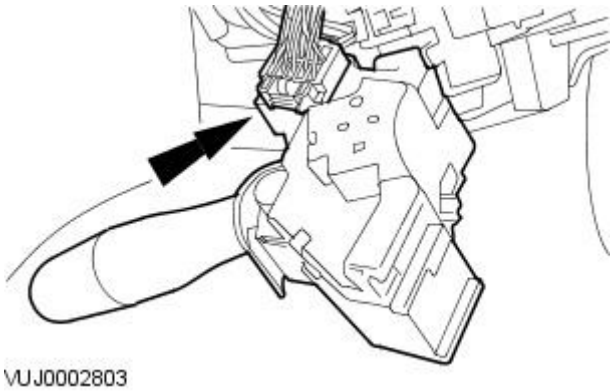

6. Remove the steering column multifunction switch left-hand.

- Disconnect the electrical connector.

Installation

1. To install, reverse the removal procedure.

Steering Column Switches - Steering Column Multifunction Switch RH

Removal and Installation

Removal

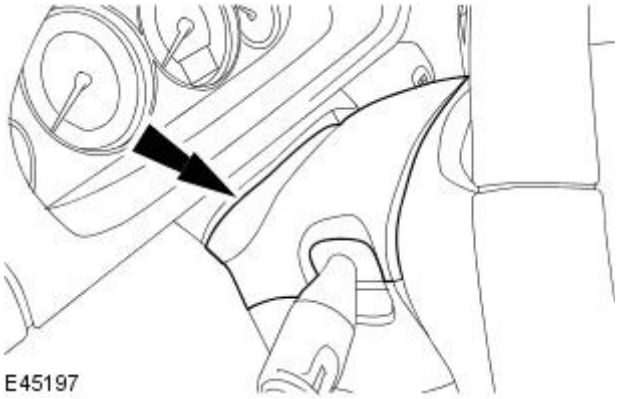

1. Lower the steering column.
2. Remove the steering column upper shroud.

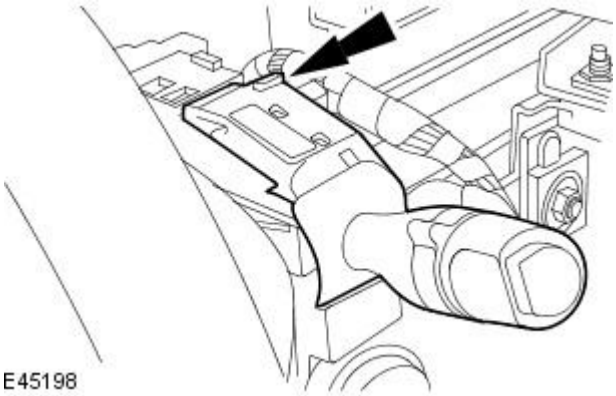

3. Detach the steering column multifunction switch right-hand.
   - Release the retaining tang.

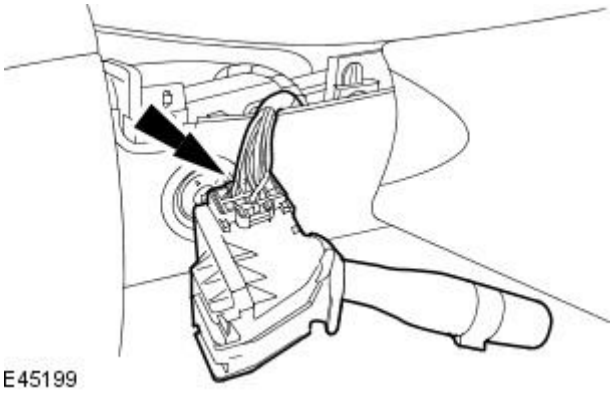

4. Remove the steering column multifunction switch right-hand.
   - Disconnect the electrical connector.

Installation

1. To install, reverse the removal procedure.

Engine System - General Information -

General specifications 2.0 litre diesel.

Item	Specification
Code	FMBA/FMBB
Firing order	1-3-4-2
Cylinder bore diameter	86 mm
Stroke	86 mm
Displacement	1998 cc
Compression ratio	19:1
Engine weight	195 kg (excluding front end accessory drive)
Power output at 3800 rpm	96 kW (130 PS)
Torque at 1800 rpm	325 Nm
Idle speed	900 rpm

General specifications 2.2 litre diesel.

Item	Specification
Code	QJBA
Firing order	1-3-4-2
Cylinder bore diameter	86 mm
Stroke	94.6 mm
Displacement	2198 cc
Compression ratio	19:1
Power output at 3800 rpm	114 kW (155 PS)
Torque at 1800 rpm	360 Nm
Idle speed	800 rpm

General specifications 2.0 litre.

Item	Specification
Displacement in liters	2.099
Number of cylinders	6
Bore and stroke (mm)	81.6 x 66.84
Firing order	1,4,2,5,3,6
Compression ratio	10.75:1

General specifications 2.5 litre.

Item	Specification
Displacement in liters	2.495
Number of cylinders	6
Bore and stroke (mm)	81.6 x 79.5
Firing order	1,4,2,5,3,6
Compression ratio	10.3:1

General specifications 3.0 litre.

Item	Specification
Displacement in liters	2.967
Number of cylinders	6
Bore and stroke (mm)	89.0 x 79.5
Firing order	1,4,2,5,3,6
Compression ratio	10.5:1

Cylinder Block Dimensions 2.0 litre and 2.2 litre diesel.

Description	mm
Cylinder bore diameter – Class 1	86·000 - 86·010
Cylinder bore diameter – Class 2	86·010 - 86·020
Cylinder bore diameter – Class 3	86·020 - 86·030
Main bearing shells 1 to 4 – inside diameter (bearings installed)	65·003 - 65·030
Main bearing shells 5 – inside diameter (bearings installed)	70·004 - 70·033
Main bearings 1 to 4 – radial clearance	0·033 - 0·080
Main bearing 5 – radial clearance	0·034 - 0·083
Main bearings 1 to 4 – parent bore diameter – vertical measurement	64·504 - 64·520
Main bearing 5 – parent bore diameter – vertical measurement	74·504 - 74·520
Main bearings 1 to 4 – parent bore diameter – horizontal measurement	69·502 - 69·525
Main bearing 5 – parent bore diameter – horizontal measurement	74·502 - 74·525

Piston Dimensions 2.0 litre and 2.2 litre diesel.

Description	mm
Piston cooling code	6
Piston diameter – Class A	85·94 - 85·95
Piston diameter – Class B	85·95 - 85·96
Piston diameter – Class C	85·96 - 85·97
Piston clearance in cylinder	0·05 - 0·07

Piston ring gap – piston ring installed 2.0 litre and 2.2 litre diesel.

Description	mm
Upper compression ring	0·25 - 0·50
Lower compression ring	0·50 - 0·75
Oil scraper ring	0·25 - 0·40

Piston ring gap position: Distribute the piston ring gaps evenly around the circumference of the piston. This also applies to the oil control scraper ring elements. Position the ring gaps offset at 120 degrees to one another.

Piston Pin Dimensions 2.0 litre and 2.2 litre diesel.

Description	mm
Piston pin - length	66·700
Piston pin – diameter	30·000
Piston pin - clearance in piston pin bore	0·002 - 0·012

Crankshaft Dimensions 2.0 litre and 2.2 litre diesel.

Description	mm
Main bearing journal – diameter	69·950 - 69·970
Main bearing journal – end float	0·090 - 0·305
Big-end bearing journal – diameter	52·980 - 53·000
Main bearing journals 1 to 4 – diameter	64·950 - 64·970

Connecting Rod Dimensions 2.0 litre and 2.2 litre diesel.

Description	mm
Big-end bore – diameter	55·996 - 56·016
Small-end bore – diameter	30·010 - 30·018
Bid-end bearing shell – inside diameter (bearings installed) - Vehicle with 2.0L diesel engine	56·004 - 56·032
Bid-end bearing shell – inside diameter (bearings installed) - Vehicle with 2.2L diesel engine	53·034 - 53·080
Big-end bearing – radial clearance	0·034 - 0·100
Big-end bearing – end float	0·100 - 0·320

Camshaft Dimensions 2.0 litre and 2.2 litre diesel.

Description	mm
Camshaft bearing journal – diameter	26·450
Camshaft bearing clearance – radial measurement	0·065
Camshaft – end float	0·125

Valves 2.0 litre and 2.2 litre diesel.

Description	mm
Valve stem to valve guide clearance – intake valve	0·045
Valve stem to valve guide clearance – exhaust valve	0·055

Cylinder Head 2.0 litre and 2.2 litre diesel.

Description	mm
Thickness of cylinder head gasket with piston protrusion of 0·430 - 0·520 mm	1·10 (1 hole/tooth)
Thickness of cylinder head gasket with piston protrusion of 0·521 - 0·570 mm	1·15 (2 holes/teeth)
Thickness of cylinder head gasket with piston protrusion of 0·571 - 0·620 mm	1·20 (3 holes/teeth)
Maximum longitudinal/diagonal distortion of cylinder head surface	0·100
Peak to valley height of mating surface	0·020

Cylinder Head and Valve Train 2.0 litre.

Item	Specification
Valve guide inner diameter (mm)	5.514 - 5.544
Intake valve effective length (mm)	91.13 - 90.93
Exhaust valve effective length (mm)	89.88 - 89.68
Valve stem to guide clearance intake - diameter (mm)	0.067 - 0.022
Valve stem to guide clearance exhaust - diameter (mm)	0.080 - 0.035
Valve head diameter intake (mm)	30.15 - 29.85
Valve head diameter exhaust (mm)	26.15 - 25.85
Intake valve face angle degree	45.75°
Exhaust valve face angle degree	45.25°
Valve stem diameter intake (mm)	5.492 - 5.477
Valve stem diameter exhaust (mm)	5.479 - 5.464
Valve spring free length (mm)	44.2
Valve spring installed height (mm)	33.41
Camshaft lobe lift intake (mm)	8.876
Camshaft lobe lift exhaust (mm)	8.876
Camshaft end play (mm)	0.150 - 0.070
Camshaft journal to cylinder head bearing surface clearance diameter (mm)	0.076 - 0.025
Camshaft journal diameter standard runout limit (mm)	0.040
Camshaft journal diameter standard out of round (mm)	0.013

Cylinder Head and Valve Train 2.5 litre.

Item	Specification
Valve guide inner diameter (mm)	5.514 - 5.544
Intake valve effective length (mm)	91.13 - 90.93
Exhaust valve effective length (mm)	89.88 - 89.68
Valve stem to guide clearance intake - diameter (mm)	0.067 - 0.022
Valve stem to guide clearance exhaust - diameter (mm)	0.080 - 0.035
Valve head diameter intake (mm)	30.15 - 29.85
Valve head diameter exhaust (mm)	26.15 - 25.85
Intake valve face angle degree	45.75°
Exhaust valve face angle degree	45.25°
Valve stem diameter intake (mm)	5.492 - 5.477
Valve stem diameter exhaust (mm)	5.479 - 5.464
Valve spring free length (mm)	44.2
Valve spring installed height (mm)	33.41
Camshaft lobe lift intake (mm)	9.367
Camshaft lobe lift exhaust (mm)	9.461
Camshaft end play (mm)	0.150 - 0.070
Camshaft journal to cylinder head bearing surface clearance diameter (mm)	0.076 - 0.025
Camshaft journal diameter standard runout limit (mm)	0.040
Camshaft journal diameter standard out of round (mm)	0.013

Cylinder Head and Valve Train 3.0 litre.

Item	Specification
Valve guide inner diameter (mm)	5.514 - 5.544
Intake valve effective length (mm)	91.13 - 90.93
Exhaust valve effective length (mm)	89.88 - 89.68
Valve stem to guide clearance intake - diameter (mm)	0.067 - 0.022
Valve stem to guide clearance exhaust - diameter (mm)	0.080 - 0.035
Valve head diameter intake (mm)	35.15 - 34.85

Item	Specification
Valve head diameter exhaust (mm)	30.15 - 29.85
Intake valve face angle degree	45.75°
Exhaust valve face angle degree	45.25°
Valve stem diameter intake (mm)	5.492 - 5.477
Valve stem diameter exhaust (mm)	5.479 - 5.464
Valve spring free length (mm)	44.2
Valve spring installed height (mm)	33.41
Camshaft lobe lift intake (mm)	9.367
Camshaft lobe lift exhaust (mm)	9.461
Camshaft end play (mm)	0.150 - 0.070
Camshaft journal to cylinder head bearing surface clearance diameter (mm)	0.076 - 0.025
Camshaft journal diameter standard runout limit (mm)	0.040
Camshaft journal diameter standard out of round (mm)	0.013

Lubrication system 2.0 litre and 2.2 litre diesel.

Item	Liters
Oil capacity with filter	6.7

Lubrication system 2.0, 2.5 and 3.0 litre.

Item	Liters
Oil capacity with filter	6.5

Engine System - General Information - Engine

Description and Operation

2.0L, 2.5L and 3.0L Engines

The 2.0L, 2.5L and 3.0L engines consists of:

- A six cylinder 60 degree 'V' configuration liquid cooled aluminium cylinder block with dry cast iron liners.
- Aluminium pistons with cut-outs in the piston crown to clear the valve heads for any available combination of camshaft profile and valve phasing.
- Two aluminium cylinder heads with square squish chambers.
- Two cast iron overhead camshafts per bank.
- Four valves per cylinder.
- Mechanical tappets and top mounted steel shims.
- Continuous variable camshaft timing (VCT) of the inlet camshafts.
- Two silent timing chains with one hydraulic tensioner per chain.
- Magnesium alloy camshaft covers with rubber seals.
- A variable intake system containing two electrically controlled intake manifold tuning valves.
- Plastic lower intake manifold with integral fuel rail and injectors.
- Aluminium timing cover which accommodates the crankshaft front oil seal.
- An oil pump mounted around the crankshaft.
- An aluminium bed plate.
- An aluminium oil pan.
- A steel crankshaft (2.5L and 3.0L engines only).
- A cast iron crankshaft (2.0L engines only).
- Fracture-split connecting rods in sintered-forged steel.
- A single, six ribbed vee belt drives the front end accessories.
- A water pump belt pulley mounted directly to the exhaust camshaft of the left-hand cylinder head.
- A single, three ribbed vee belt which drives the water pump.
- A water pump mounted on the rear of the left-hand cylinder head.
- An advanced engine management system incorporating electronic throttle control.

The unit meets the requirements of the CARB OBDII USA legislation.

CAUTION: The use of supplementary oil or fuel additives is not approved unless specified by Jaguar cars in the form of a service communication or directive.

The engine code and serial number is located on the left-hand side of the bed plate near the oil cooler assembly.

2.0L and 2.2L common rail diesel engine

The 2.0L and 2.2L common rail diesel engine consists of:

- a four cylinder cast iron cylinder block
- a aluminium cylinder head
- a separate camshaft carrier
- a forged steel crankshaft with eight counterweights
- lightweight aluminium alloy pistons
- fracture split connecting rods
- a multi link drive chain which drives the camshafts and the high pressure pump
- a single link chain which drives a gear-type oil pump
- hydraulically operated timing chain tensioner
- fabricated camshafts with sintered lobes
- roller rocker valve actuation
- two exhaust valves and two inlet valves per cylinder
- a plastic composite camshaft cover
- a pressed steel timing cover which must be aligned using the special tool
- a engine oil cooler is mounted to the left hand side of the engine
- a water pump is mounted to the left hand rear of the engine and driven via the rear of the power steering pump
- a power steering pump is mounted to the left hand rear of the engine and driven by the rear of the intake camshaft via a multi-vee belt
- a variable vain turbocharger.

Engine System - General Information - Engine

Diagnosis and Testing

Inspection and Verification

Since diagnosis and testing actually begins when repairs are taken on, the following procedure is recommended.

1. **1.** Verify the customer concern by operating the system.
2. **2.** Visually inspect for obvious signs of mechanical damage or electrical damage. If the concern cannot be reproduced, carry out a road test and/or visual check with the aid of the following table.

Visual Inspection Chart

Mechanical
○ Coolant leaks ○ Oil leaks ○ Leaks in the fuel system ○ Visibly damaged or worn parts ○ Loose or missing nuts or bolts

3. **3.** If an obvious cause for an observed or reported concern is found, correct the cause (if possible) before proceeding to the next step.
4. **4.** If the concern is not visually evident, verify the symptom and refer to the Symptom Chart.

Symptom Chart

Symptom Chart

Symptom	Possible Sources	Action
Difficult to start during hot or cold start	* Piston ring(s) worn, damaged, sticking or worn piston/cylinder.	* INSTALL a new engine.
	* Head gasket damaged.	* INSPECT the head gasket.
	* Fuel system damaged or inoperative.	* For additional information, refer to Section 303-04A Fuel Charging and ControlsSection 303-04B Fuel Charging and ControlsSection 303-04C Fuel Charging and Controls - Turbocharger.
	* Ignition system inoperative.	* For additional information, refer to Section 303-04A Fuel Charging and ControlsSection 303-04B Fuel Charging and ControlsSection 303-04C Fuel Charging and Controls - Turbocharger.
Poor Idling	* Restricted exhaust system.	* INSPECT the exhaust system. For additional information, refer to Section 309-00 Exhaust System.
	* Vacuum leak.	* CARRY out the Intake Manifold Vacuum Test in this section. REPAIR and INSTALL new components as necessary.
	* Burned valve(s).	* INSPECT the valve(s).
	* Incorrect valve to valve seat contact.	* INSPECT the valve and valve seat.
	* Head gasket damaged.	* INSPECT the head gasket.
	* Fuel system damaged or inoperative.	* For additional information, refer to Section 303-04A Fuel Charging and ControlsSection 303-04B Fuel Charging and ControlsSection 303-04C Fuel Charging and Controls - Turbocharger.
Insufficient power	* Compression leakage from valve seat.	* INSPECT the valve or valve seat.
	* Valve sticking.	* INSPECT valve stem to valve guide clearance or carbon accumulation.
	* Valve spring weak or broken.	* INSPECT the valve spring.
	* Head gasket damaged.	* INSPECT the head gasket.
	* Cylinder head cracked or distorted.	* INSPECT the cylinder head.
	* Piston ring(s) worn, damaged or sticking.	* INSTALL a new engine.
	* Fuel system damaged or inoperative.	* For additional information, refer to Section 303-04A Fuel Charging and ControlsSection 303-04B Fuel Charging and ControlsSection 303-04C Fuel Charging and Controls - Turbocharger.
	* Brakes dragging.	* For additional information, refer to Section 206-00 Brake System - General Information.
	* Restricted exhaust system.	* INSPECT the exhaust system. For additional information, refer to Section 309-00 Exhaust System.
Excessive or insufficient compression.	* Valve(s) burnt or sticking.	* INSPECT the valve(s).
	* Valve spring(s) weak or broken.	* INSPECT the valve spring(s).
	* Piston ring(s) worn, damaged, sticking or worn piston/cylinder.	* INSTALL a new engine.
	* Head gasket damaged.	* INSPECT the head gasket.
	* Carbon accumulation in combustion chamber.	* ELIMINATE carbon build up.
	* Fuel system damaged or inoperative.	* For additional information, refer to Section 303-04A Fuel Charging and ControlsSection 303-04B Fuel Charging and ControlsSection 303-04C Fuel Charging and Controls - Turbocharger.
Excessive oil consumption	* Piston ring(s) worn, damaged, sticking or worn piston/cylinder.	* INSTALL a new engine.
	* Valve stem seal worn or missing.	* INSPECT the valve or valve stem seal.
	* Oil leakage.	* REPAIR oil leakage.
	* Valve stem or valve guide worn.	* INSPECT the valve stem or valve guide.
	* Incorrect oil viscosity.	* DRAIN and FILL with new oil.
	* Diluted oil.	* CHECK oil dilution. DRAIN and FILL as necessary.
	* Crankcase overfilled.	* CHECK and adjust the oil level.
	* Incorrect oil pressure.	* CHECK the oil pressure. REPAIR as necessary.
Engine noise	* Excessive crankshaft main bearing clearance.	* INSTALL a new engine.

	* Excessive crankshaft end play.	* INSTALL a new engine.
	* Excessive connecting rod bearing oil clearance.	* INSTALL a new engine.
	* Piston/cylinder worn.	* INSTALL a new engine.
	* Piston ring damaged.	* INSTALL a new engine.
	* Connecting rod bent.	* INSTALL a new engine.
	* Valve spring(s) broken.	* INSPECT the valve spring(s).
	* Excessive valve guide clearance.	* INSPECT the valve guide or valve.
	* Cooling system inoperative (water pump, vibration of radiator).	* For additional information, refer to Section 303-03A Engine CoolingSection 303-03B Engine Cooling.
	* Fuel system inoperative.	* For additional information, refer to Section 303-04A Fuel Charging and ControlsSection 303-04B Fuel Charging and ControlsSection 303-04C Fuel Charging and Controls - Turbocharger.
	* Excessive carbon buildup.	* ELIMINATE carbon buildup.
	* Exhaust gas leakage.	* REPAIR leakage. For additional information, refer to Section 309-00 Exhaust System.
	* Incorrect drive belt tension.	* INSPECT the drive belt tension. For additional information, refer to Section 303-05 Accessory Drive.
	* Generator front bearing worn.	* For additional information, refer to Section 414-02 Generator and Regulator.
Tappet noise, engine running	* Incorrect tappet clearance.	* CHECK and ADJUST the tappet clearance as necessary.

Component Tests

Engine Oil Leaks

• NOTE: Before installing new gaskets or oil seals, make sure that the fault is clearly established.

If the oil leak cannot be identified clearly by a visual inspection, carry out an UV test:

Fluorescent Oil Additive Method

1. **1.** Clean the engine with a suitable cleaning fluid (brake cleaner).
2. **2.** Drain the engine oil and refill with recommended oil, premixed with Diesel Engine Oil Dye or equivalent. Use a minimum 14.8 ml (0.5 ounce) to a maximum 29.6 ml (1 ounce) of fluorescent additive to all engines. If oil is not premixed, fluorescent additive must first be added to the crankcase.
3. **3.** Run engine for 15 minutes. Stop the engine and inspect all seal and gasket areas for leaks using a 12 Volt Master UV Diagnostic Inspection Kit or equivalent. A clear bright yellow or orange area will identify leak. For extremely small leaks, several hours may be required for the leak to appear.
4. **4.** As necessary, pressurize the main oil gallery system to locate leaks due to incorrectly sealed, loose or cocked plugs.
5. **5.** Repair all leaks as necessary.

Compression Test

General Remarks

• NOTE: Removing fuses and disconnecting electrical components causes the engine control module (ECM) to log an error message. After the measurements have been carried out this error message should be cleared from memory by connecting to approved Jaguar diagnostic system.

• NOTE: Only check the compression pressure with the valves set to the prescribed clearance (if this can be adjusted).

The compression pressure should be checked with the engine at operating temperature.

Check The Compression Pressure

WARNING: On manual transmissions shift the transmission into neutral. On automatic transmission vehicles, select "P". Failure to follow these instructions may result in personal injury.

1. **1.** Remove the fuel pump relay.
2. **2.** Start the engine - the engine will start, run for a few seconds then stall.
3. **3.** Remove the spark plugs.
4. **4.** Install the compression tester.
5. **5.** Install an auxiliary starter switch in the starting circuit. With the ignition switch OFF, using the auxiliary starter switch, crank the engine a minimum of five compression strokes and record the highest reading. Note the approximate number of compression strokes required to obtain the highest reading.
6. **6.** Repeat the test on each cylinder, cranking the engine approximately the same number of compression strokes.
7. **7.** Install the components in reverse order, observing the specified tightening torques.
8. **8.** Reset the ECM fault memory.

Interpretation of the Results

The indicated compression pressure are considered within specification if the lowest reading cylinder is within 75% of the highest reading.

CAUTION: If engine oil is sprayed into the combustion chamber, after carrying out the measurement run the engine at 2000 rpm for about 15 minutes, in order to burn the oil and prevent damage to the catalytic converter.

If the measurement on one or more cylinders is much lower than the specified value, spray some engine oil into the combustion chamber

and repeat the compression measurement.

If the reading greatly improves then the piston rings are damaged.

If the reading stays the same then the cause is either damaged valve seats or valve stem seals.

If the measurements for two cylinders next to each other are both too low then it is very likely that the cylinder head gasket between them is burnt through. This can also be recognized by traces of engine oil in the coolant and/or coolant in the engine oil.

Excessive Engine Oil Consumption

The amount of oil an engine uses will vary with the way the vehicle is driven in addition to normal engine-to-engine variation. This is especially true during the first 16,100 km (10,000 miles) when a new engine is being broken in or until certain internal components become conditioned. Vehicles used in heavy-duty operation may use more oil. The following are examples of heavy-duty operation:

- Trailer towing applications.
- Severe loading applications.
- Sustained high speed operation.

Engines need oil to lubricate the following internal components:

- Cylinder block cylinder walls.
- Pistons and piston rings.
- Intake and exhaust valve stems.
- Intake and exhaust valve guides.
- All internal engine components.

When the pistons move downward, a thin film of oil is left on the cylinder walls. As the vehicle is operated, some oil is also drawn into the combustion chambers past the intake and exhaust valve stem seals and burned.

The following is a partial list of conditions that can affect oil consumption rates:

- Engine size.
- Operator driving habits.
- Ambient temperatures.
- Quality and viscosity of oil.

Operation under varying conditions can frequently be misleading. A vehicle that has been run for several thousand miles on short trips or in below-freezing ambient temperatures may have consumed a "normal" amount of oil. However, when checking the engine oil level, it may measure up to the full mark on the oil level indicator due to dilution (condensation and fuel) in the engine crankcase. The vehicle then might be driven at high speeds on the highway where the condensation and fuel boil off. The next time the engine oil is checked it may appear that a liter of oil was used in about 160 km (100 miles) per liter oil consumption rate is about 2,400 km (1,500 miles) per liter.

Make sure the selected engine oil meets Jaguar specification and the recommended API performance category "SG" and SAE viscosity grade as shown in the vehicle Owner's Guide. It is also important that the engine oil is changed at the intervals specified for the typical operating conditions.

Oil Consumption Test

The following diagnostic procedure is used to determine the source of excessive oil consumption.

• NOTE: Oil use is normally greater during the first 16,100 km (10,000 miles) of service. As mileage increases, oil use decreases. Vehicles in normal service should get a least 16,000 km (10,000 miles) per liter. High speed driving, towing, high ambient temperature and other factors may result in greater oil use.

1. **1.** Define excessive consumption, such as the number of miles driven per liter of oil used. Also determine customers's driving habits, such as sustained high speed operation, towing, extended idle and other considerations.

2. **2.** Verify that the engine has no external oil leaks as described under Engine Oil Leaks.

3. **3.** Verify that the engine has the correct oil level.

4. **4.** Verify that the engine is not being run in an overfilled condition. Check the oil level at least five minutes after a hot shutdown with the vehicle parked on a level surface. In no case should the level be above the top of the cross-hatched area and the letter "F" in FULL. If significantly overfilled, carry out step 5, sub steps 1 through 4.

5. **5.** Carry out an oil consumption test:

    1. Drain engine oil and fill with one liter less than the recommended amount.
    2. Run the engine for three minutes (10 minutes if cold), and allow oil to drain back for at least five minutes with vehicle parked on level surface.
    3. Remove the oil level indicator and wipe clean. (Do not wipe with anything contaminated with silicone compounds.) Install the oil level indicator making sure to seat the oil level indicator firmly in the oil level indicator tube. Remove the oil level indicator and draw a mark on the back (unmarked) surface at the indicated oil level. (This level should be about the same as the ADD mark on the face of the oil level indicator.)
    4. Add one liter of oil. Start the engine and allow to idle for at least two minutes. Shut off the engine and allow the engine oil to drain back for at least five minutes. Mark the oil level dipstick, using the procedure above. (This level may range from slightly below the top of the cross-hatched area to slightly below the letter "F" in FULL.
    5. Record the vehicles mileage.
    6. Instruct the customer to drive the vehicle as usual and:
        1. Check the oil level regularly at intervals of 160-240 km (100-150 miles).
        2. Return to the service point when the oil level drops below the lower (ADD) mark on the oil level indicator.
        3. Add only full liters of the same oil in an emergency. Note the mileage at which the oil is added.
    7. Check the oil level under the same conditions and at the same location as in steps 3 and 4.
        1. Measure the distance from the oil level to the UPPER mark on the oil level indicator and record.
        2. Measure the distance between the two scribe marks and record.
        3. Divide the first measurement by the second.
        4. Divide the distance driven during the oil test by the result. This quantity is the approximate oil consumption rate in kilometers per liter or in mile per quart.

5. If the oil consumption rate is unacceptable go to Step 6.

6. **6.** Check the positive crankcase ventilation (PCV) system. Make sure the system is not plugged.
7. **7.** Check for plugged oil drain-back holes in the cylinder head and cylinder block.
8. **8.** If the condition still exists after carrying out the above tests go to step 9.
9. **9.** Carry out a cylinder compression test. Refer to the procedure in this section : Compression Test. This can help determine the source of oil consumption such as valves, piston rings or other areas.
10. **10.** Check valve guides for excessive guide clearance. Install new valve stem seals after verifying valve guide clearance.
11. **11.** Worn or damaged internal engine components can cause excessive oil consumption. Small deposits of oil on the tips of the spark plugs can be a clue to internal oil consumption.

Intake Manifold Vacuum Test

Bring the engine to normal operating temperature. Connect a vacuum gauge or equivalent to the intake manifold. Run the engine at the specified idle speed.

The vacuum gauge should read between 51-74 kPa (15-22 in-Hg) depending upon the engine condition and the altitude at which the test is performed. Subtract 4.0193 kPa (1 in-Hg) from the specified reading for every 304.8 m (1,000 feet) of elevation above sea level.

The reading should be steady. As necessary, adjust the gauge damper control (where used) if the needle is fluttering rapidly. Adjust the damper until the needle moves easily without excessive flutter.

Interpreting Vacuum Gauge Readings

A careful study of the vacuum gauge reading while the engine is idling will help pinpoint trouble areas. Always conduct other appropriate tests before arriving at a final diagnostic decision. Vacuum gauge readings, although helpful, must be interpreted carefully.

Most vacuum gauges have a normal band indicated on the gauge face.

The following are potential gauge readings. Some are normal; others should be investigated further.

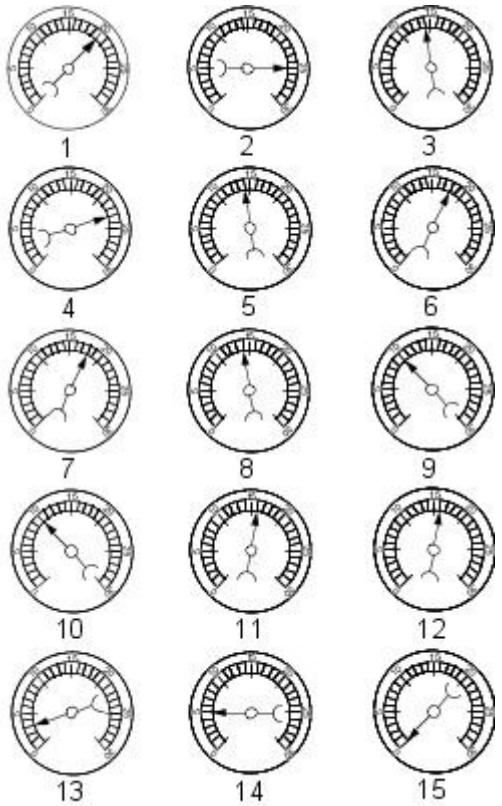

VUJ0001694

1. **1.** NORMAL READING: Needle between 51-74 kPa (15-22 in-Hg) and holding steady.
2. **2.** NORMAL READING DURING RAPID ACCELERATION : When the engine is rapidly accelerated (dotted needle), the needle will drop to a low (not to zero) reading. When the throttle is suddenly released, the needle will snap back up to a higher than normal figure.
3. **3.** NORMAL FOR HIGH-LIFT CAMSHAFT WITH LARGE OVERLAP: The needle will register as low as 51 kPa (15 in-Hg) but will be relatively steady. Some oscillation is normal.
4. **4.** WORN RINGS OR DILUTED OIL: When the engine is accelerated (dotted needle), the needle drops to 0 kPa (0 in-Hg). Upon deceleration, the needle runs slightly above 74 kPa (22 in-Hg).
5. **5.** STICKING VALVES: When the needle (dotted) remains steady at a normal vacuum but occasionally flicks (sharp, fast movement) down and back about 13 kPa (4 in-Hg), one or more valves may be sticking.
6. **6.** BURNED OR BENT VALVES: A regular, evenly-spaced, downscale flicking of the needle indicates one or more burned or damaged valves. Insufficient hydraulic valve tappet or hydraulic lash adjuster clearance will also cause this reaction.
7. **7.** POOR VALVE SEATING: A small but regular downscale flicking can mean one or more valves are not seating correctly.
8. **8.** WORN VALVE GUIDES: When the needle oscillates over about a 13 kPa (4 in-Hg) range at idle speed, the valve guides could be worn. As engine speed increases, the needle will become steady if guides are responsible.
9. **9.** WEAK VALVE SPRINGS: When the needle oscillation becomes more violent as engine RPM is increased, weak valve springs are

indicated. The reading at idle could be relatively steady.

10. **10.** LATE VALVE TIMING: A steady but low reading could be caused by late valve timing.

11. **11.** IGNITION TIMING RETARDING: Retarded ignition timing will produce a steady but somewhat low reading.

12. **12.** INSUFFICIENT SPARK PLUG GAP: When spark plugs are gapped too close, a regular, small pulsation of the needle can occur.

13. **13.** INTAKE LEAK: A low, steady reading can be caused by an intake manifold or throttle body gasket leak.

14. **14.** BLOWN HEAD GASKET: A regular drop of fair magnitude can be caused by a blown head gasket or warped cylinder head to cylinder block surface.

15. **15.** RESTRICTED EXHAUST SYSTEM: When the engine is first started and is idled, the reading may be normal, but as the engine rpm is increased, the back pressure caused by a clogged muffler, kinked tail pipe or other concerns will cause the needle to slowly drop to 0 kPa (0 in-Hg). The needle then may slowly rise. Excessive exhaust clogging will cause the needle to drop to a low point even if the engine is only idling.

When vacuum leaks are indicated, search out and correct the cause. Excess air leaking into the system will upset the fuel mixture and cause concerns such as rough idle, missing on acceleration or burned valves. If the leak exists in an accessory such as the power brake booster, the unit will not function correctly. Always repair vacuum leaks.

Engine System - General Information - Bearing Inspection

General Procedures

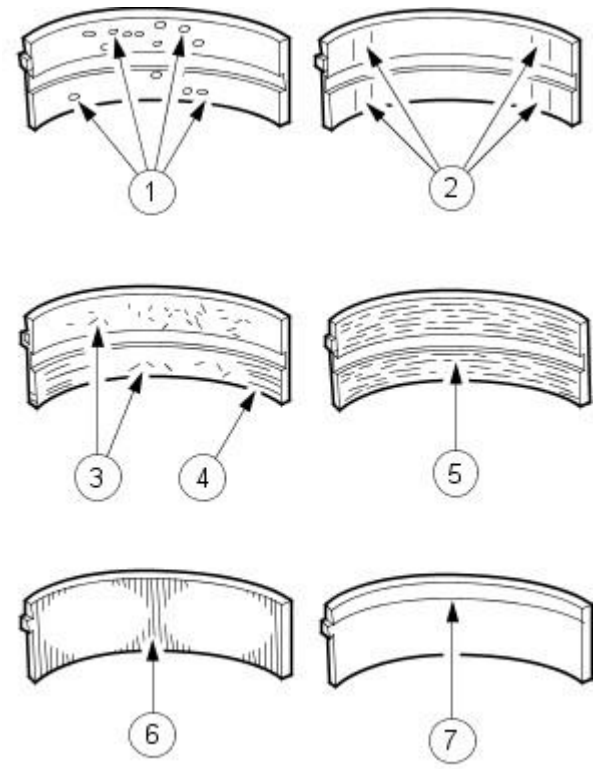

VUJ0002219

1. Inspect bearings for the following defects.

1. Cratering - fatigue failure
2. Spot polishing - incorrect seating.
3. Imbedded dirt engine oil.
4. Scratching - dirty engine oil.
5. Base exposed - poor lubrication.
6. Both edges worn - journal damaged.
7. One edge worn - journal tapered or bearing not seated.

Engine System - General Information - Camshaft Bearing Journal Clearance

General Procedures

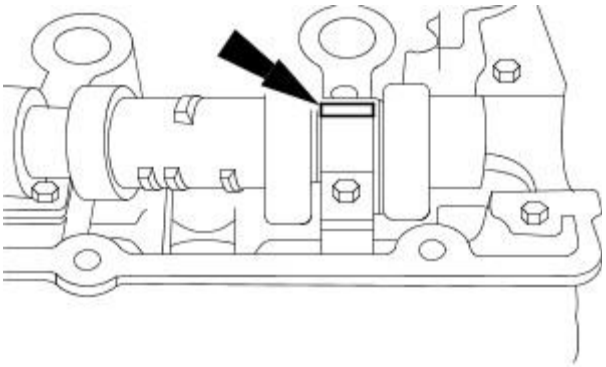

VUJ0001696

1. NOTE: Make sure that the following stages are followed exactly. The tappets or followers must be removed to carry out this measurement.

• NOTE: Make sure that the camshaft is to specification.

• NOTE: The bearing caps and journals should be free from engine oil and dirt.

Position on a length of plastigage on the bearing cap.

- Insert the camshaft, without lubrication, into the cylinder head.
- Position a plastigage strip, which should be equal to the width of the bearing cap, on the bearing journal.

2. Install the camshaft bearing caps. For additional information, refer to Section 303-01A EngineSection 303-01B Engine.

3. NOTE: Do not strike the bearing caps.

Remove the camshaft bearing caps. For additional information, refer to Section 303-01A EngineSection 303-01B Engine.

4. Using the special tool, read off the measurement.

- Compare the width of plastigage with the plastigage scale.
- The value that is read off is the bearing clearance.
- If the values are not to specification install a new camshaft.

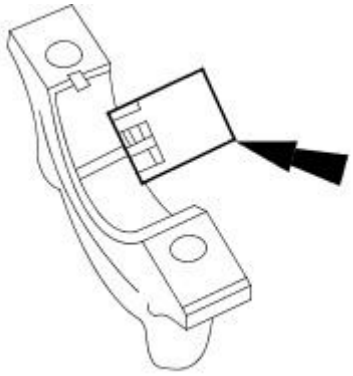

VUJ0001697

Engine System - General Information - Camshaft Bearing Journal Diameter

General Procedures

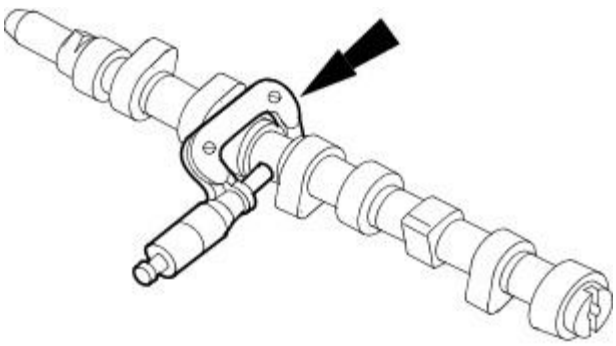

VUJ0001695

1. Determine the diameter of the camshaft journals.

- Using a micrometer measure the diameter at 90 degrees intervals to determine if the journals are out-of-round.
- Measure at two different points on the journal to determine if there is any tapering.
- If the measurements are out of the specified range, install a new camshaft.

Engine System - General Information - Camshaft End Play

General Procedures

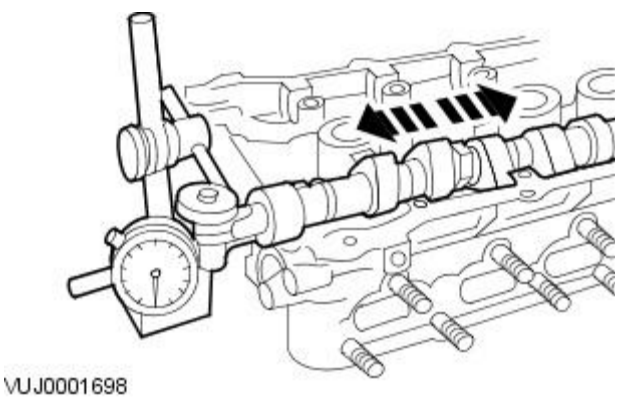

1. NOTE: Make sure that the camshaft is to specification.

Using the special tool, measure the end play.

- Slide the camshaft in both directions. Read and note the maximum and minimum values on the dial indicator gauge.
  1. End play = maximum value minus minimum value.
- If the measurement is out of specification, install new components.

Engine System - General Information - Camshaft Lobe Lift

General Procedures

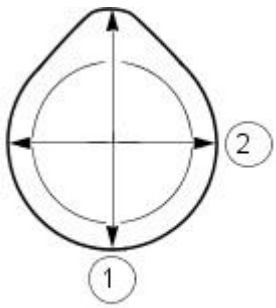

VUJ0001699

1. Measure the diameter (1) and diameter (2) with a vernier caliper. The difference in measurements is the lobe lift.

Engine System - General Information - Camshaft Surface Inspection

General Procedures

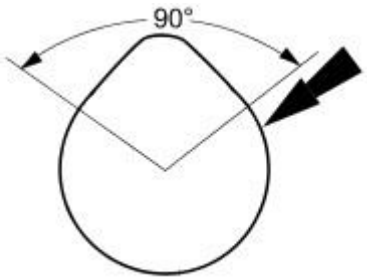

VUJ0001700

1. Inspect camshaft lobes for pitting or damage in the active area. Minor pitting is acceptable outside the active area.

Engine System - General Information - Connecting Rod Cleaning

General Procedures

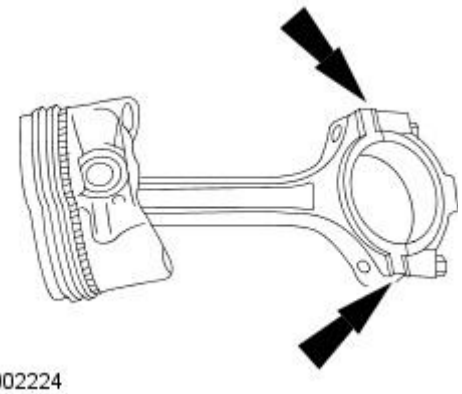

VUJ0002224

1. CAUTION: Do not use a caustic cleaning solution or damage to connecting rods may occur.

Mark and separate the parts and clean with solvent. Clean the oil passages.

Engine System - General Information - Connecting Rod Large End Bore

General Procedures

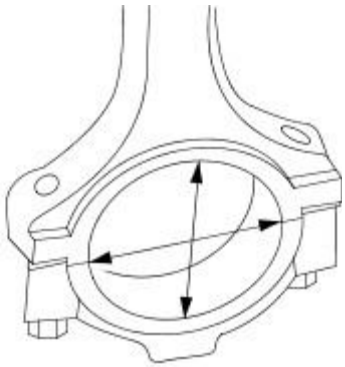

VUJ0002223

1. Measure the bearing bore in two directions. The difference is the connecting rod bore out-of-round. Verify the out-of-round is within specification.

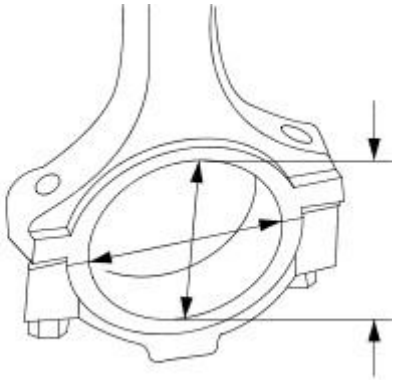

VUJ0002222

2. Measure the bearing bore diameter in two directions. Verify the bearing bore is within specification.

Engine System - General Information - Crankshaft End Play

General Procedures

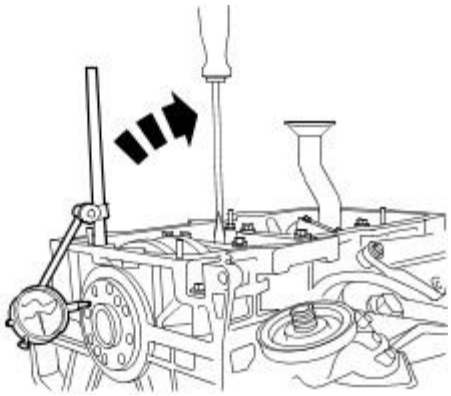

VUJ0002235

1. Using the Dial Indicator Gauge with Brackets, measure the end play.

- Measure the end play by lifting the crankshaft using a lever.
- If the value is out of the specification, install new thrust half rings to take up the end float and repeat the measurement.

Engine System - General Information - Crankshaft Main Bearing Journal Clearance

General Procedures

1. The main bearing machine codes are displayed on the crankshaft (1) and the cylinder block (2)

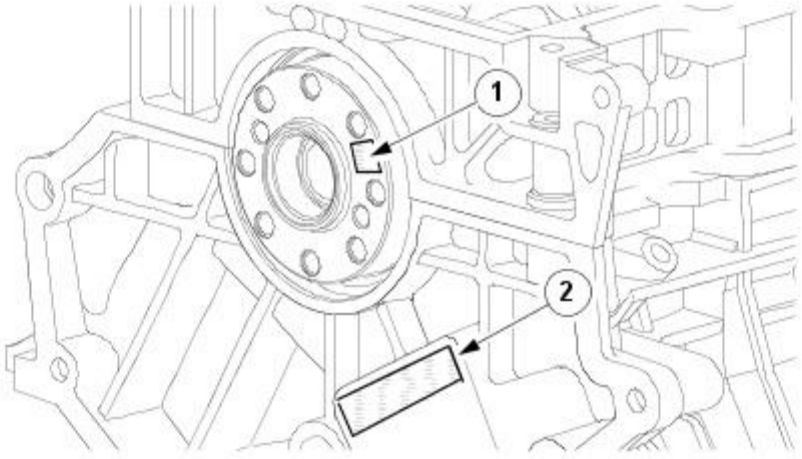

E53234

2. NOTE: Main bearing number 1 relates to the front of the engine.

Read the identification numbers from the crankshaft (1).

- The first two numbers represent the code for main bearing number 1.
- The second pair of numbers represents the code for main bearing number 2.
- The third pair of numbers represents the code for main bearing number 3.
- The last pair of numbers represents the code for main bearing number 4.

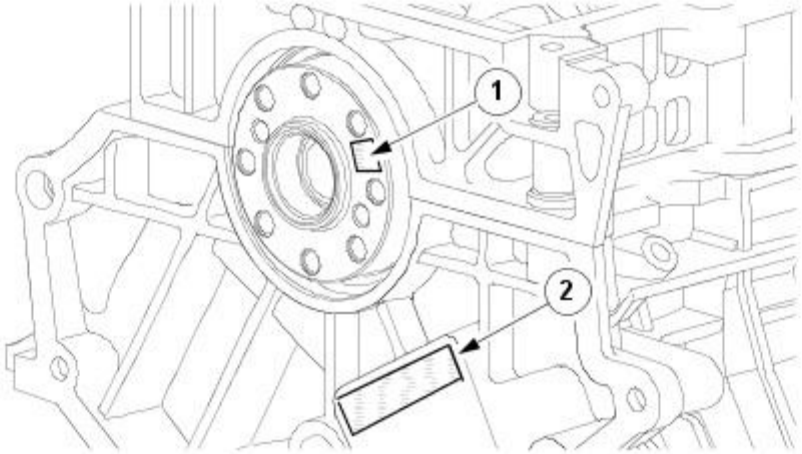

E53234

3. NOTE: Main bearing number 1 relates to the front of the engine.

Read the identification numbers on the cylinder block (2).

- The first two numbers represent the code for main bearing number 1.
- The second pair of numbers represents the code for main bearing number 2.
- The third pair of numbers represents the code for main bearing number 3.
- The last pair of numbers represents the code for main bearing number 4.

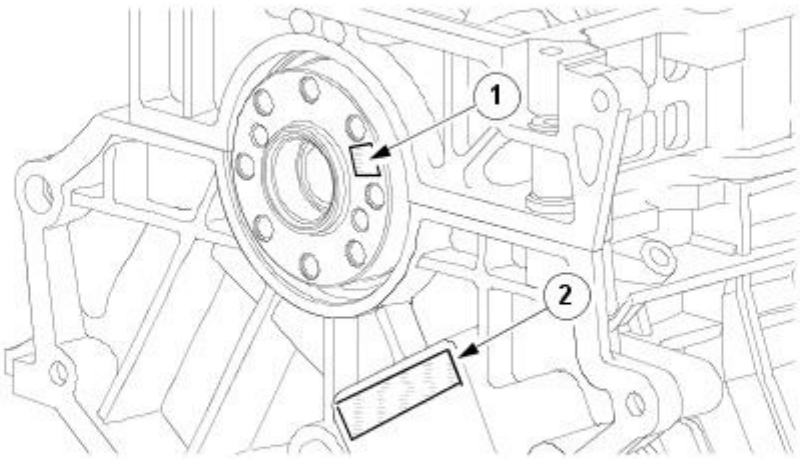

E53234

4. Using the select fit chart, for each main bearing match the crankshaft code (1) and the block code (2) with it's corresponding column or row. By reading across the crankshaft code row (1) and down the block code column (2) select the correct grade bearing for each main.

- **1 Crankshaft code.**
- **2 Block code.**

2

1	98	99	00	01	02	03	04	05	06	07	08	09	10	11	12	13	14	15	16	17	18	19	20	21	22
92	1	1	1	1	1	1	1	1	1	1	1	1	1	1	1	1	2	2	2	2	2	2	2	2	2
91	1	1	1	1	1	1	1	1	1	1	1	1	1	1	1	2	2	2	2	2	2	2	2	2	2
90	1	1	1	1	1	1	1	1	1	1	1	1	1	1	2	2	2	2	2	2	2	2	2	2	2
89	1	1	1	1	1	1	1	1	1	1	1	1	1	2	2	2	2	2	2	2	2	2	2	2	2
88	1	1	1	1	1	1	1	1	1	1	1	1	2	2	2	2	2	2	2	2	2	2	2	2	2
87	1	1	1	1	1	1	1	1	1	1	1	2	2	2	2	2	2	2	2	2	2	2	2	2	2
86	1	1	1	1	1	1	1	1	1	1	2	2	2	2	2	2	2	2	2	2	2	2	2	2	2
85	1	1	1	1	1	1	1	1	1	2	2	2	2	2	2	2	2	2	2	2	2	2	2	2	2
84	1	1	1	1	1	1	1	1	2	2	2	2	2	2	2	2	2	2	2	2	2	2	2	2	3
83	1	1	1	1	1	1	1	2	2	2	2	2	2	2	2	2	2	2	2	2	2	2	2	3	3
82	1	1	1	1	1	1	2	2	2	2	2	2	2	2	2	2	2	2	2	2	2	2	3	3	3
81	1	1	1	1	1	2	2	2	2	2	2	2	2	2	2	2	2	2	2	2	2	3	3	3	3
80	1	1	1	1	2	2	2	2	2	2	2	2	2	2	2	2	2	2	2	2	3	3	3	3	3
79	1	1	1	2	2	2	2	2	2	2	2	2	2	2	2	2	2	2	2	3	3	3	3	3	3
78	1	1	2	2	2	2	2	2	2	2	2	2	2	2	2	2	2	2	3	3	3	3	3	3	3
77	1	2	2	2	2	2	2	2	2	2	2	2	2	2	2	2	2	3	3	3	3	3	3	3	3
76	2	2	2	2	2	2	2	2	2	2	2	2	2	2	2	2	3	3	3	3	3	3	3	3	3
75	2	2	2	2	2	2	2	2	2	2	2	2	2	2	2	3	3	3	3	3	3	3	3	3	3
74	2	2	2	2	2	2	2	2	2	2	2	2	2	2	3	3	3	3	3	3	3	3	3	3	3
73	2	2	2	2	2	2	2	2	2	2	2	2	2	3	3	3	3	3	3	3	3	3	3	3	3
72	2	2	2	2	2	2	2	2	2	2	2	2	3	3	3	3	3	3	3	3	3	3	3	3	3
71	2	2	2	2	2	2	2	2	2	2	2	3	3	3	3	3	3	3	3	3	3	3	3	3	3
70	2	2	2	2	2	2	2	2	2	2	3	3	3	3	3	3	3	3	3	3	3	3	3	3	3
69	2	2	2	2	2	2	2	2	2	3	3	3	3	3	3	3	3	3	3	3	3	3	3	3	3
68	2	2	2	2	2	2	2	2	3	3	3	3	3	3	3	3	3	3	3	3	3	3	3	3	3

E53233

5. E.g. if the crankshaft code is *8580*8082* and the Block code is *0609*0711*, main bearing 1 should be assembled with a grade 1 bearing, as determined by the intersection of the number 06 block column (2) and the number 85 crankshaft row (1).

- Main bearing 2, 3 and 4 would all be assemble with a grade 2.

Published: 11-May-2011

Engine System - General Information - Crankshaft Main Bearing Journal Diameter

General Procedures

General Equipment

Micrometer

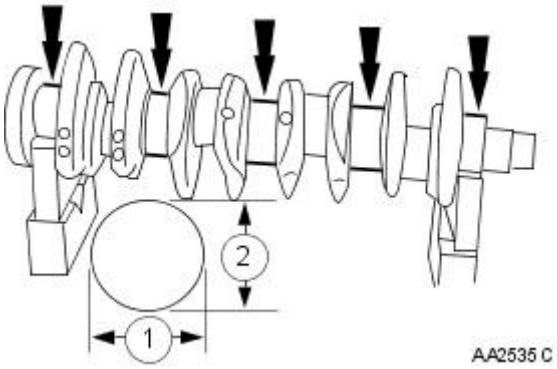

1. Measure the diameter of the main bearing journals and the big-end bearing journals.
   - Repeat the measurement with the micrometer offset by 90°, in order to determine any eccentricity which may be present.
   - Measure the journal at two different positions to determine any conicity which may be present.

Engine System - General Information - Cylinder Block Distortion

General Procedures

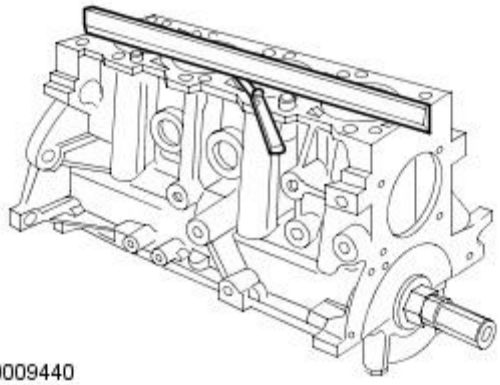

1. Using a Straight Edge and a Feeler Gauge, measure the cylinder block/cylinder head distortion.
   - Measure the mating face distortion.
   - If the value is not to specification rework the mating face (if permitted).

Engine System - General Information - Cylinder Bore Out-of-Round

General Procedures

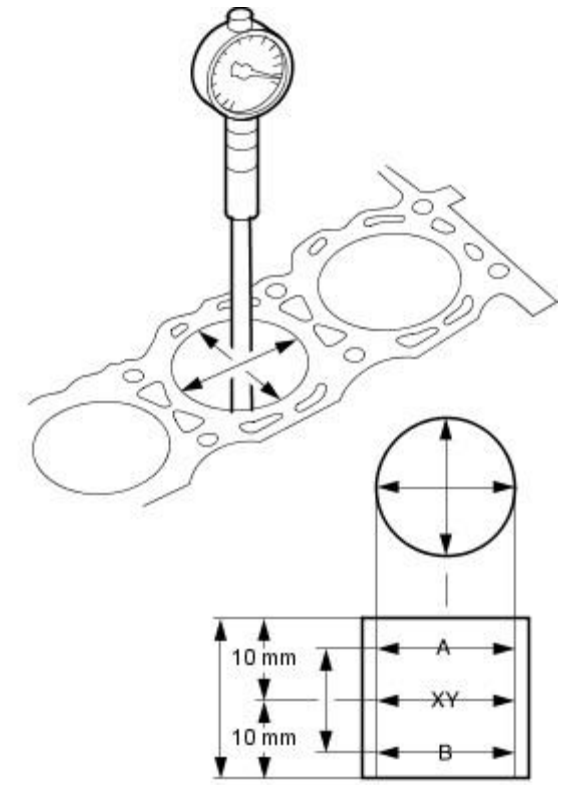

VUJ0002234

1. NOTE: The main bearing caps or lower crankcase must be in place and tightened to the specified torque; however, the bearing shells should not be installed.

Measure the cylinder bore with an internal micrometer.

- Carry out the measurements in different directions and at different heights to determine if there is any out-of-roundness or tapering.
- If the measurement is out of the specified range, hone out the cylinder block or install a new block.

Engine System - General Information - Cylinder Head Distortion

General Procedures

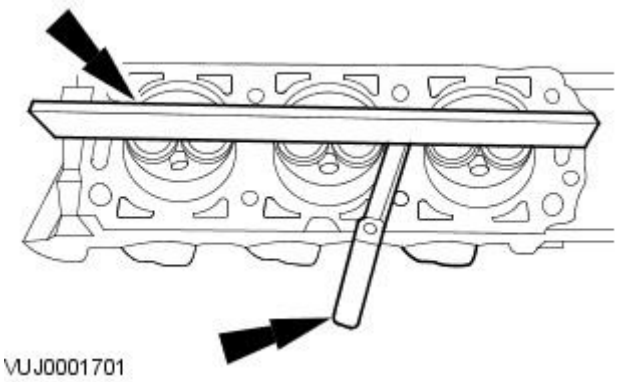

1. Measure the cylinder block/cylinder head distortion.

- Using the special tool, measure the mating face distortion.
- If the value is not to specification rework the mating face (petrol only).

Published: 11-May-2011

Engine System - General Information - Exhaust Manifold Cleaning and Inspection

General Procedures

1. Inspect the cylinder head joining flanges of the exhaust manifold for evidence of exhaust gas leaks.
2. Inspect the exhaust manifold for cracks, damaged gasket surfaces, or other damage that would make it unfit for further use.

Engine System - General Information - Flywheel Inspection

General Procedures

1. CAUTIONS:

Do not rework the flywheel if it is distorted.

Do not clean the dual mass flywheel with any kind of fluid. Clean the flywheel with a dry cloth only.

Do not clean the gap between the primary and secondary mass. Only clean the bolt connection surface and the clutch surface.

Inspect the flywheel for:

1. Any cracks.
2. Worn ring gear teeth.
3. Chipped or cracked ring gear teeth.

2. Check the flywheel for lateral movement

- Rotational movement in either one or both directions, or rock on it axis in relation to the primary mass is acceptable.
- If there is any lateral movement, install a new flywheel.

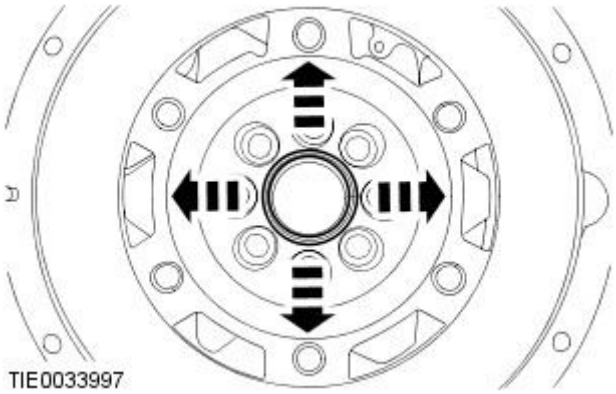

TIE0033997

3. CAUTION: Make sure that the three locating dowels are installed.

Check if the locating dowels are touching the primary mass of the flywheel.

- If the locating dowels are touching the primary mass of the flywheel, install a new flywheel.

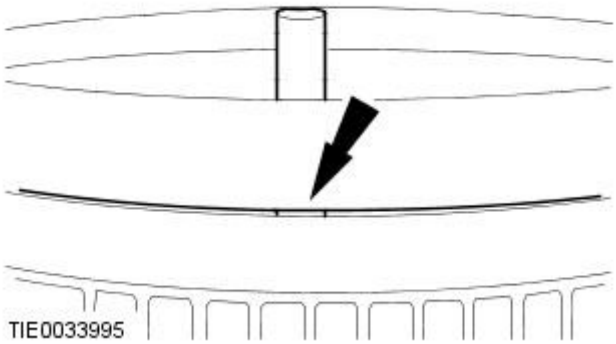

TIE0033995

4. Inspect for grease along the welding.

- If grease is evident, install a new flywheel.

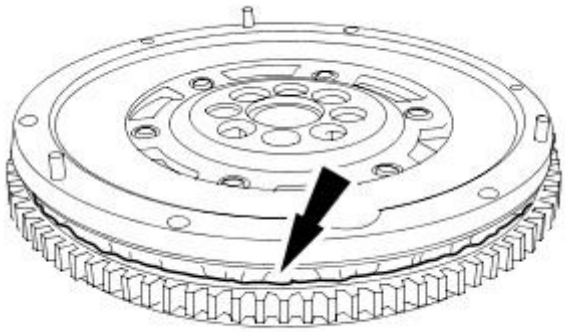

TIE0033996

Published: 11-May-2011

Engine System - General Information - Piston Diameter

General Procedures

General Equipment

Micrometer

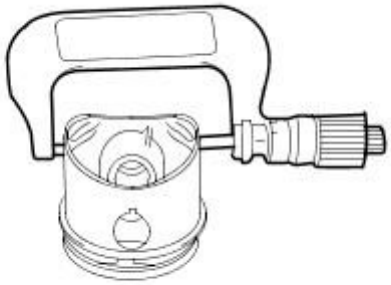

IAV2102103

1. NOTE: Mark the piston to make sure the piston is installed correctly.

Using a Micrometer measure the piston diameter.

Engine System - General Information - Piston Inspection

General Procedures

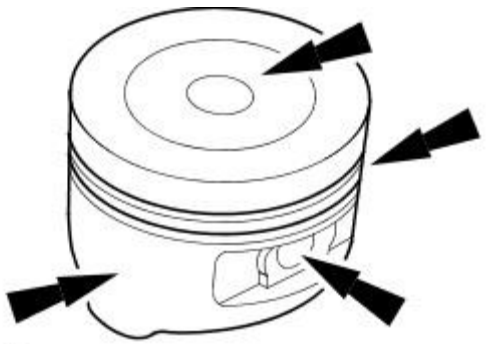

VUJ0002233

1. CAUTION: Do not use any aggressive cleaning fluid or a wire brush to clean the piston.

Carry out a visual inspection.

- Clean the piston skirt, pin bush, ring grooves and crown and check for wear or cracks.
- If there are signs of wear on the piston skirt, check whether the connecting rod is twisted or bent.

Engine System - General Information - Piston Pin Diameter

General Procedures

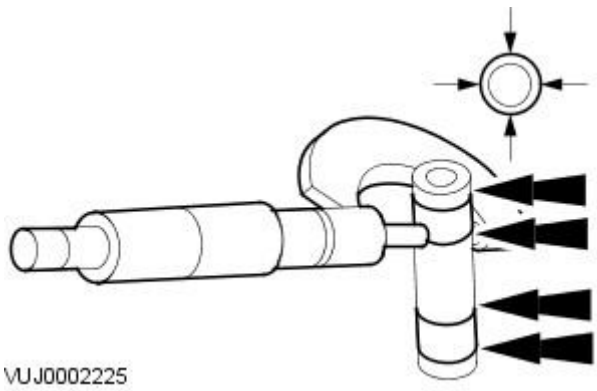

1. NOTE: The piston and piston pin are a matched pair. Do not mix up the components.

Measure the piston pin diameter.

- Measure the diameter in two directions.
- If the values are not to specification, install a new piston and a new piston pin.

Engine System - General Information - Piston Pin to Bore Diameter

General Procedures

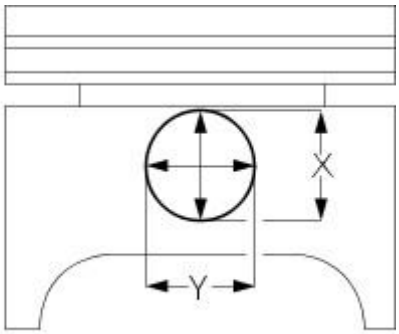

VUJ0002232

1. NOTE: The piston and piston pin form a matched pair. Do not mix up the components.

Measure the diameter of the piston pin bore.

- Measure the diameter in two directions.
- If the values are not to specification, install both a new piston and a new piston pin.

Engine System - General Information - Piston Ring End Gap

General Procedures

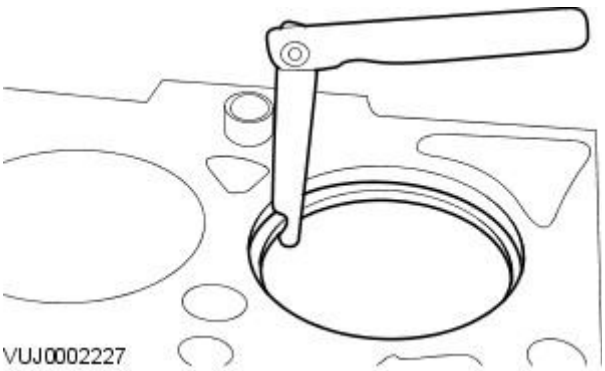

1. CAUTION: Do not mix up the piston rings. Install the piston rings in the same position and location.

Using the Feeler Gauge, measure the piston ring gap.

- The values given in the specification refer to a gauge ring used during production.

Engine System - General Information - Piston Ring-to-Groove Clearance

General Procedures

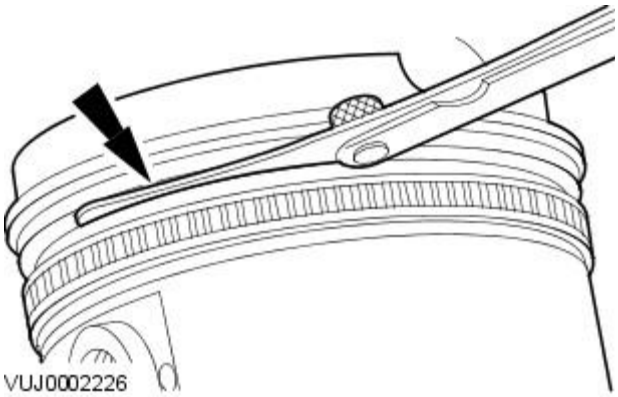

1. NOTE: The piston ring must protrude from the piston groove. To determine the piston ring clearance, insert the Feeler Gauge right to the back of the groove, behind the wear ridge.

Using the Feeler Gauge, measure the piston ring clearance.

Published: 11-May-2011

Engine System - General Information - Valve Seat Inspection

General Procedures

General Equipment

Valve seat width scale

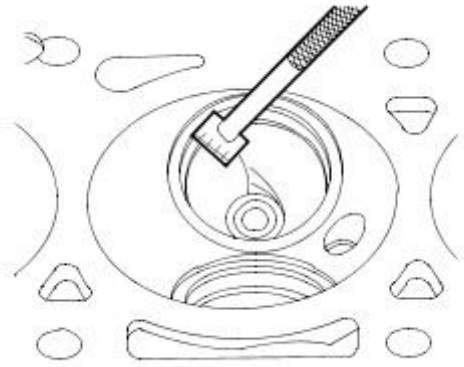

IAV2102141

1. Measure the width of the valve seat.

- Measure the valve seat width using the Valve seat width scale.
- If the value is not to specification rework the valve seat.

Engine System - General Information - Valve Spring Free Length

General Procedures

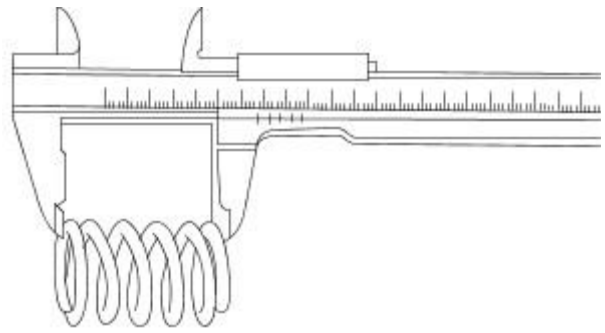

VUJ0002221

1. Using a vernier gauge, measure the free length of each valve spring. Verify the length is within specification.

Engine System - General Information - Valve Stem Diameter

General Procedures

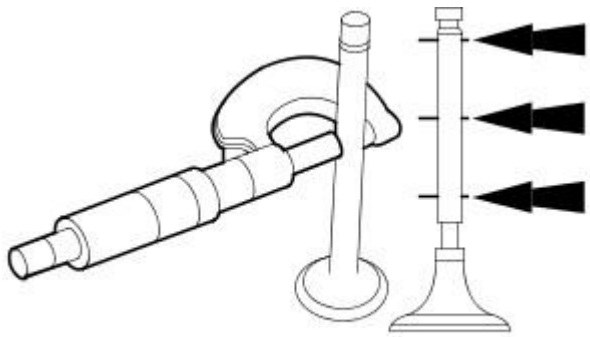

VUJ0002220

1. Using a micrometer measure the diameter of the valve stems.

- If the measurements are not to specification, install a new valve.

Engine System - General Information - Leakage Test Using Smoke Test Equipment

General Procedures

CAUTION: The compressed air line supply pressure must be between 3.5 and 12 bar (50 and 175 psi) for the smoke test equipment to function correctly. Do not exceed this pressure. Failure to follow this instruction may result in damage to the smoke test equipment.

• NOTE: The vehicle battery must be in good condition and fully charged before carrying out this procedure.

• NOTE: On vehicles with 3.0L TDV6, it will be necessary to insert smoke at both air cleaner outlet pipes independently if the right hand turbocharger and associated hoses are to be tested.

• NOTE: In some cases it may be necessary to remove undertrays, trim or engine covers to obtain access to all potential leak locations.

• NOTE: Some variation in the illustrations may occur, but the essential information is always correct.

• NOTE: For further information regarding operation of the test equipment refer to the manufacturers operators manual supplied with the kit.

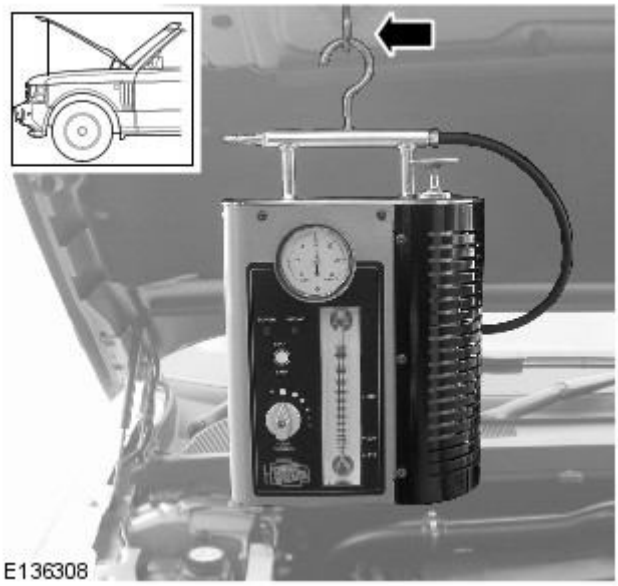

1. WARNING: Use an additional support to prevent the hood from falling if the smoke test equipment is secured to the hood. Failure to follow this instruction may result in personal injury.

Install the smoke test equipment to a suitable location under the hood.

2. Connect a suitable compressed air line to the smoke test equipment.

3. Connect the smoke test equipment positive power cable to the battery positive terminal.

4. WARNING: Do not connect the smoke test equipment negative cable to the battery negative terminal.

Connect the smoke test equipment negative cable to a suitable body ground point.

5. NOTE: A flashing green light indicates low battery voltage. In this case, place the battery on charge and make sure that the battery is fully charged before using the smoke test equipment.

Observe the power indicator lamp on the smoke test equipment. Make sure that a continuous green light is displayed.

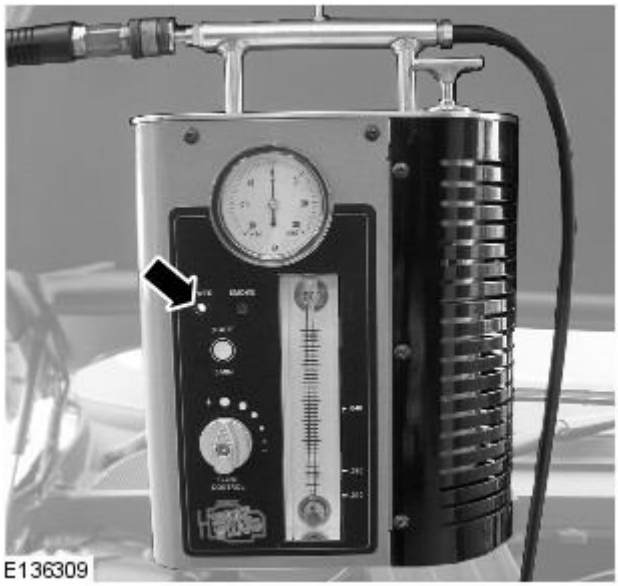

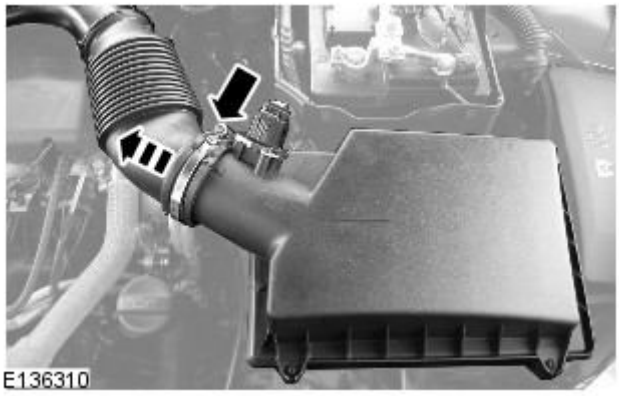

6. NOTE: In some cases it may be necessary to remove the air cleaner(s) to allow access to the air cleaner outlet pipes.

• NOTE: In some cases it will be necessary to cap one of the air cleaner outlet pipes. Use the blanking caps supplied in the kit to cap the open orifice.

Disconnect the air cleaner outlet pipe(s).

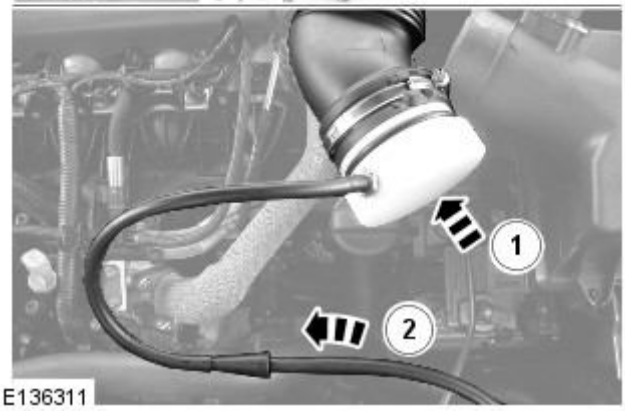

7. NOTE: Make sure the smoke test equipment adapter is a good fit to the air cleaner outlet pipe. This must be an air tight seal.

Connect the smoke test equipment supply hose to the air cleaner outlet pipe.

1. Install the appropriate adapter to the air cleaner outlet pipe.
2. Connect the smoke test equipment supply hose to the adapter link hose.

8. NOTE: The flow control valve must be in the fully open position.

• NOTE: Smoke is produced for 5 minutes. The smoke test equipment will automatically switch off after this period of time.

Switch the smoke test equipment on.

9. Remove the oil filler cap, and observe until a constant flow of smoke is visible leaving the oil filler orifice. Install the oil filler cap.

10. NOTE: The longer smoke is allowed to exit from a leak, the more fluorescent dye will be deposited at a leak location.

Using the torch supplied in the kit set to white light, look for escaping smoke. Alternatively, use the ultraviolet light to look for fluorescent dye deposits at the source of a leak.

Engine - 2.0L NA V6 - AJV6 / 2.5L NA V6 - AJV6 / 3.0L NA V6 - AJ27 -

Lubricants, Fluids, Sealers and Adhesives

Description	Specification
Engine oil 2.0L gasoline, SAE 5W-30 (NAS)	API SL and ILSAC GF–3
Engine oil 2.0L gasoline, SAE 5W-30 (ROW)	API SJ / EC and ACEA A1 or A3 Jaguar WSS–M2C913–B preferred
Engine oil 2.0L Diesel (EUR)	5W–30 meeting Jaguar WSS–M2C913–B
Engine oil 2.2L Diesel (EUR)	5W–30 meeting Jaguar WSS–M2C913–B
Engine oil 2.5L Gasoline (NAS)	API SL and ILSAC GF–3
Engine oil 2.5L Gasoline (ROW)	API SJ / EC and ACEA A1 or A3 Jaguar WSS–M2C913–B preferred
Engine oil 3.0L Gasoline (NAS)	API SL and ILSAC GF–3
Engine oil 3.0L Gasoline (ROW)	API SJ / EC and ACEA A1 or A3 Jaguar WSS–M2C913–B preferred
Engine assembly lubricant	SQM-2C9003 AA EP90
Hose assembly surfactant	ESE-M99B144-B
Metal surface cleaner	WSW-M5B392-A
Sealant	WSS-M4G323-A6
Spark plug grease	'Neverseeze' ESE M12 A4A

Capacities

Description	Liters
Engine oil, initial fill	6.5
Engine oil, service fill with filter change	5.9
Coolant	8.25

Torque Specifications

Description	Nm	lb-ft	lb-in
Accessory drive idler pulley (grooved) retaining bolt	25	18	-
Accessory drive idler pulley (smooth) retaining bolt	47	35	-
Accessory drive tensioner retaining bolt	47	35	-
A/C compressor retaining bolts	25	18	-
A/C compressor mounting bracket bolts	25	18	-
A/C compressor supply and return tubes retaining bolt	25	18	-
Air filter retaining bracket retaining bolt	6	-	53
Camshaft bearing caps retaining bolts	10	7	-
Camshaft position sensor retaining bolt	6	-	53
Catalytic converter to exhaust manifold retaining nuts	A	-	-
Catalytic converter retaining studs	9	-	80
Coolant pipe retaining bracket retaining bolt	6	-	53
Coolant by-pass tube to cylinder head retaining bolts.	10	7	-
Crankshaft position sensor retaining bolt	10	7	-
Crankshaft pulley retaining bolt (stage1)	A	-	-
Cylinder head retaining bolts (stage 1)	A	-	-
Engine cover retaining bracket retaining nuts	10	7	-
Engine front cover retaining bolts	A	-	-
Engine ground strap retaining bolt	10	7	-
Engine wiring harness electrical connector retaining bolt	10	7	-
Engine wiring ground strap retaining bolt	10	7	-
Exhaust Manifold retaining nuts.	20	15	-
Exhaust manifold heat shield retaining bolts	10	7	-
Engine mount to body bracket retaining nut	83	61	-
Engine mount bracket to body retaining bolts	80	59	-
Engine support bracket to engine block retaining bolts	A	-	-
Engine support bracket to engine mount retaining bolt	80	59	-
Flexplate retaining bolts	80	59	-
Flywheel retaining bolts	80	59	-
Generator battery positive cable retaining nut	12	9	-
Generator lower retaining bolt	25	18	-
Generator upper retaining bolt	47	35	-
Ignition coil retaining bolt	6	-	53
Intake manifold wiring harness retaining bolts	10	7	-
Knock sensor retaining bolt	25	18	-
Lower intake manifold retaining bolts	A	-	-
Oil cooler retaining bolt	57	42	-
Oil level indicator tube retaining bolt with stud head	10	7	-
Oil pan retaining bolts	A	-	-
Oil pan drain plug	25	18	-
Oil pan to transmission retaining bolts	45	33	-
Oil pressure sensor	14	10	-
Oil pump retaining bolts	10	7	-
Oil pump tube retaining bolts	10	7	-
Oil pump tube retaining nut	A	-	-
Power steering pump retaining bolts	25	18	-
Engine control module (ECM) wiring harness electrical connector retaining bolt	5	-	44
Spark plugs	15	11	-
Timing chain guide retaining bolts	A	-	-
Timing chain tensioner retaining bolts	25	18	-
Upper intake manifold retaining bolts	A	-	-
Upper intake manifold support bracket retaining bolts	10	7	-
Upper intake manifold support bracket retaining nut	6	-	53
Valve cover retaining bolts	A	-	-
Variable Valve Timing (VVT) securing bolts.	40 + 90 degrees	30 + 90 degrees	-
Water pump inlet tube retaining bolts	10	7	-
Water pump outlet tube retaining nuts	9	-	80

Description	Nm	lb-ft	lb-in
Wiring harness to valve cover retaining nuts	6	-	53
Throttle cable retaining bracket bolts	9	-	80
A = refer to the procedure for correct torque sequence	-	-	-

Engine - 2.0L NA V6 - AJV6 / 2.5L NA V6 - AJV6 / 3.0L NA V6 - AJ27 - Engine

Description and Operation

2.0 Litre

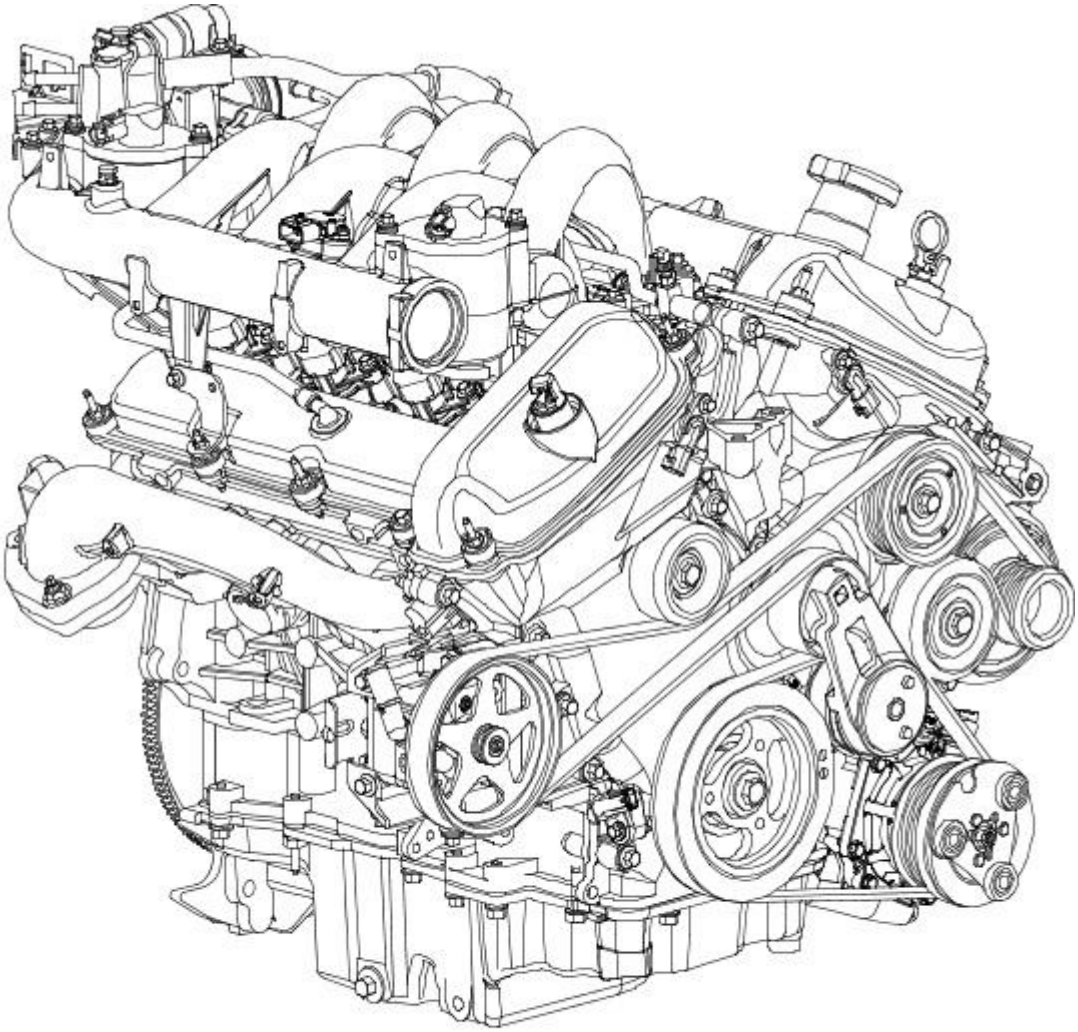

E30691

2.5 and 3.0 Litre

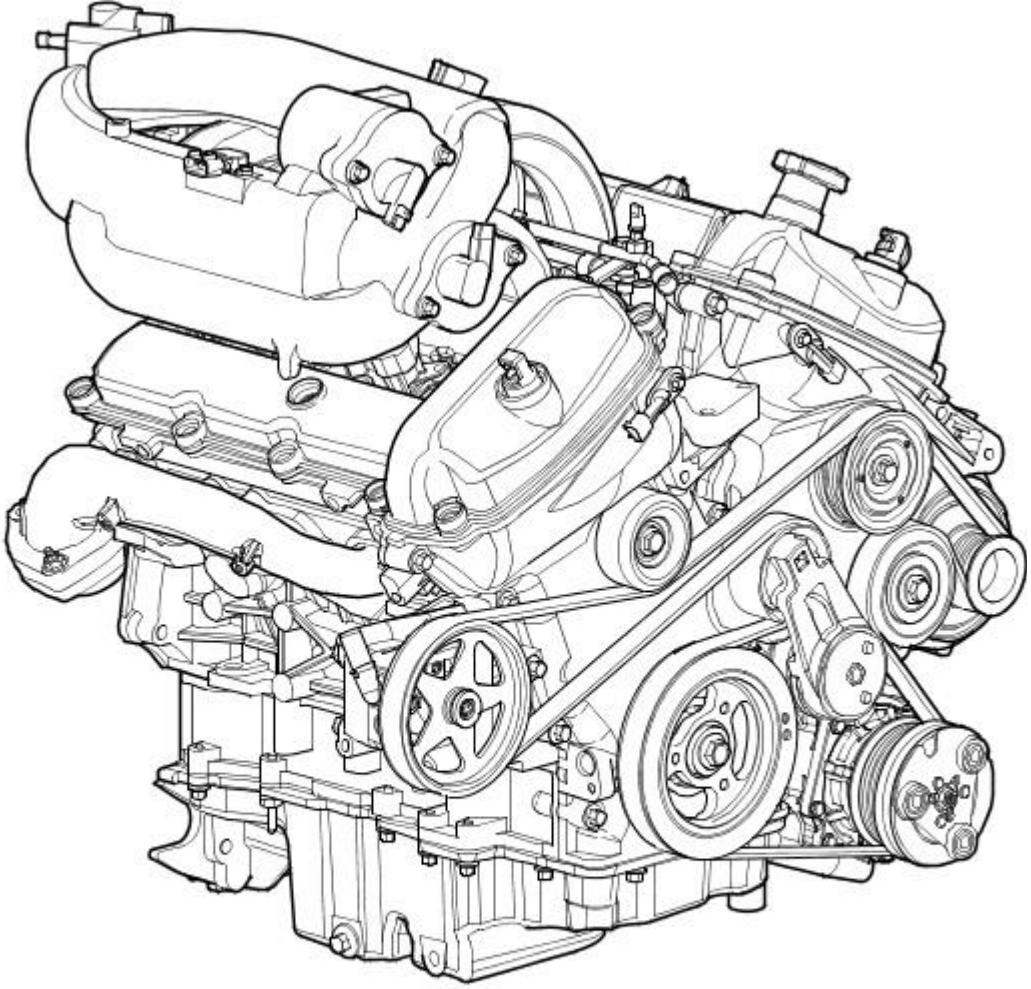

E30815

The 2.0, 2.5 and 3.0 litre 24 valve V6 engines have four overhead camshafts and are driven by two timing chains. All three engines incorporate electronic engine management with distributorless ignition system, sequential electronic fuel injection. All three have two catalytic converters in the exhaust system which includes two oxygen sensors and two catalytic monitor sensors.

Viewed from the rear of the engine, the right-hand cylinder bank is numbered 5,3,1 and the left-hand cylinder bank is numbered 6,4,2.

The engines include the following:

- 10.75:1 compression ratio on the 2.0 litre engine.
- 10.3:1 Compression ratio on the 2.5 litre engine.
- 10.5:1 Compression ratio on the 3.0 litre engine.
- 3 Stage variable geometry intake manifold.
- Lightweight valve gear.
- Unique camshaft lift and duration.
- Single knock sensor engine management control.
- Continuous variable camshaft timing (VCT) system.
- Twin mass flywheel (manual transmission).

Variable Intake System (V.I.S).

The variable intake system consists of a three stage upper intake manifold assembly, two position electronically driven gate valves and an engine management powertrain control system.

The engine control module (ECM) switches the intake manifold tuning valves between fully open and fully closed at calibrated engine speeds.

The intake manifold efficiency is therefore increased which will also increase the engine torque and engine performance.

Engine Lubrication System

The engine lubrication system is of the force-feed type in which oil is supplied under pressure (full film) to the:

- Crankshaft main bearings.
- Crankshaft thrust main bearing.
- Connecting rod bearings.
- Valve shims.
- Camshaft bearings.
- Variable camshaft timing.

All other parts are lubricated by thin film lubrication.

Oil Pump

The rotary oil pump develops the oil pressure:

- The oil pump is located at the front of the crankshaft.
- The oil pump is driven by the crankshaft.
- A full flow oil filter is externally mounted on the oil filter housing.

If the filter element should become blocked a spring-loaded bypass valve will open and allow an uninterrupted flow of oil to the engine.

Engine - 2.0L NA V6 - AJV6 / 2.5L NA V6 - AJV6 / 3.0L NA V6 - AJ27 - Engine

Diagnosis and Testing

For additional information, refer to Section 303-00 Engine System - General Information.

Published: 11-May-2011

Engine - 2.0L NA V6 - AJV6 / 2.5L NA V6 - AJV6 / 3.0L NA V6 - AJ27 - Valve Clearance Adjustment

General Procedures

1. Remove the camshafts. For additional information, refer to Camshaft
2. Use compressed air to remove the shims that require replacing.
   - Blow compressed air between the shim edge and bucket to dislodge the shim.
3. Use the following formula to calculate the required shim thickness.
   - Original shim thickness + measured clearance - desired clearance = required shim thickness.
4. Apply a light coat of engine oil to the replacement shim(s) and install.
5. Install the camshafts. For additional information, refer to Camshaft

Engine - 2.0L NA V6 - AJV6 / 2.5L NA V6 - AJV6 / 3.0L NA V6 - AJ27 - Valve Clearance Check

General Procedures

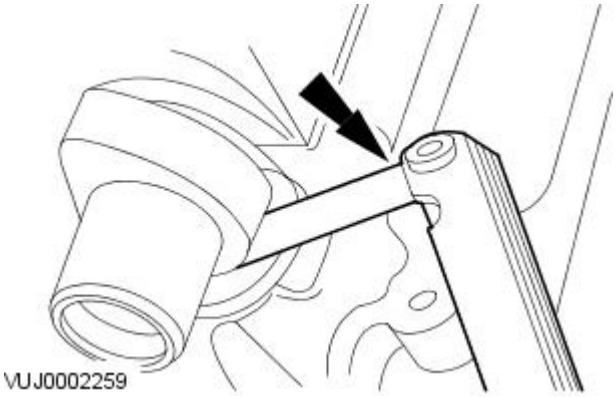

1. Remove the left hand valve cover. For additional information, refer to Valve Cover—LH
2. Remove the right hand valve cover. For additional information, refer to Valve Cover—RH
3. CAUTIONS:

Rotating the crankshaft in a counterclockwise direction may cause engine damage. Crankshaft journals are directionally machined. Rotating the crankshaft counterclockwise can raise burrs on bearing surfaces, reducing engine life.

Camshaft lobes must be 180 degrees away from each valve shim or valve clearance measurement will be incorrect.

Rotate the engine clockwise to position the camshaft lobe away from the shim surface.

4. Using the feeler gauge set, measure the clearance between the camshaft and the shim surface. Record and check the readings. For additional information, refer to Section 303-00 Engine System - General Information. Adjust the clearances as necessary. For additional information, refer to Valve Clearance Adjustment

Engine - 2.0L NA V6 - AJV6 / 2.5L NA V6 - AJV6 / 3.0L NA V6 - AJ27 - Camshafts LH

In-vehicle Repair

Removal

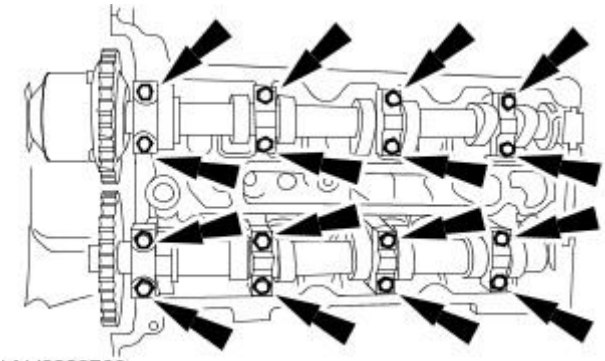

VUJ0003766

1. Remove the timing chains. For additional information, refer to Timing Drive Components.
2. Remove the camshaft bearing caps evenly.

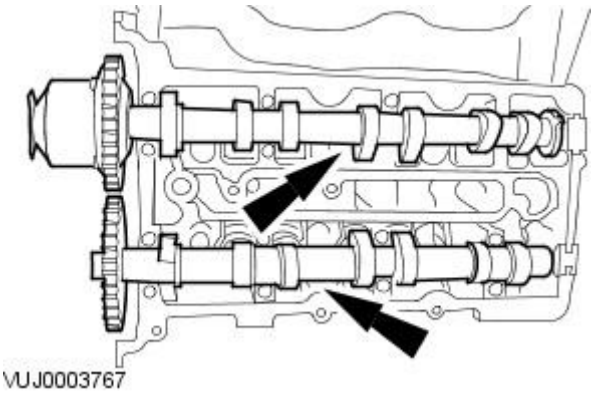

VUJ0003767

3. Remove the camshafts.

Installation

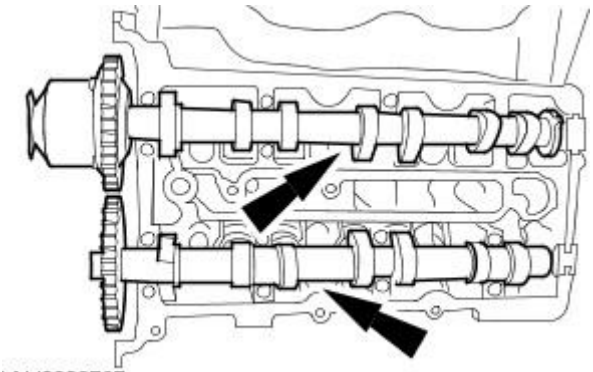

VUJ0003767

1. NOTE: Lubricate the camshafts and the camshaft bearing caps with oil WSE-M2C908-A or equivalent meeting Jaguar specification prior to installation.

   Install the camshafts.

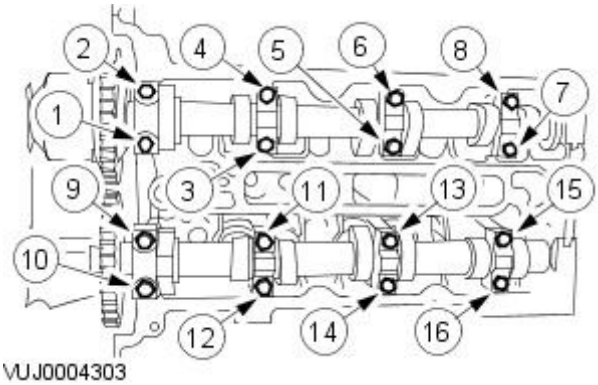

VUJ0004303

2. CAUTION: Do not install the cylinder head camshaft journal thrust caps until the camshaft journal caps are installed or damage to the thrust caps may occur.

   Install the camshaft bearing caps in their original position.

   - Install the camshaft bearing cap retaining bolts evenly.
   - Tighten the retaining bolts in the sequence shown to 10 Nm.

3. Carry out a valve clearance check. For additional information, refer toValve Clearance Check.
4. Install the timing chains. For additional information, refer to Timing Drive Components.

Engine - 2.0L NA V6 - AJV6 / 2.5L NA V6 - AJV6 / 3.0L NA V6 - AJ27 - Crankshaft Front Seal

In-vehicle Repair

Special Tool(s)	
	Crankshaft Front Seal Remover 303-700
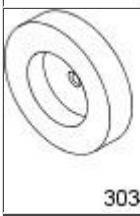	Crankshaft Front Seal Installer 303-542
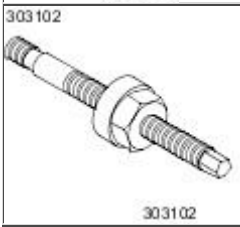	Crankshaft Damper Installer 303-102

Removal

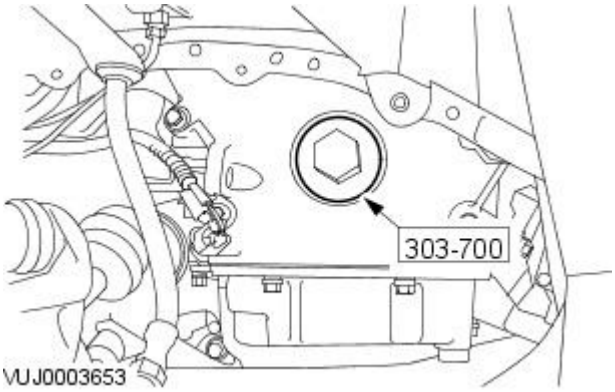

1. Remove the crankshaft vibration damper. For additional information, refer to Crankshaft Pulley.
2. Using the special tool, remove the crankshaft front oil seal.

Installation

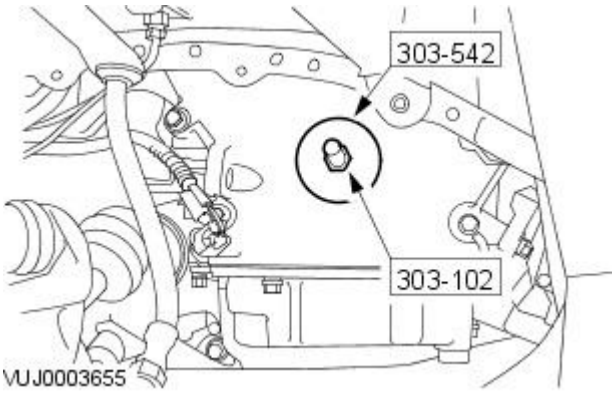

1. CAUTION: Make sure the seal and the tool are approximately parallel to the front of the engine.

• NOTE: Lubricate the seal lip with oil WSE-M2C908-A or equivalent meeting Jaguar specification.

Using the special tool, install the crankshaft front oil seal.

2. Install the crankshaft vibration damper. For additional information, refer to Crankshaft Pulley.

Engine - 2.0L NA V6 - AJV6 / 2.5L NA V6 - AJV6 / 3.0L NA V6 - AJ27 - Crankshaft Pulley

In-vehicle Repair

Special Tool(s)	
303D055	Wrench strap-universal 303-D055
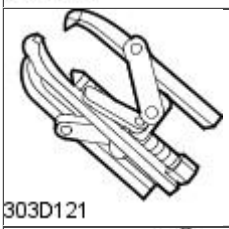 303D121	Crankshaft Damper Remover 303-D121
303D12101	Thrust Pad 303-D121-01
303102 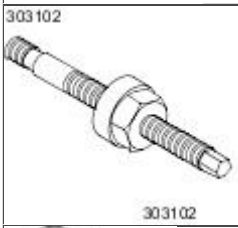 303102	Crankshaft Damper Installer Draw Bolt 303-102
303-335/2	Crankshaft Damper Installer 303-335/2
303-703	Accessory Belt Detensioner 303-703

Removal

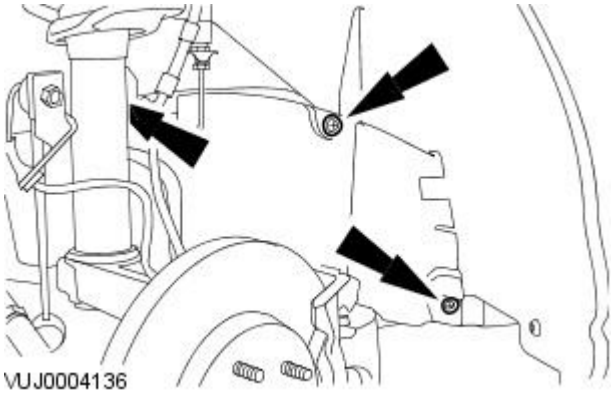

1. Remove the wheel and tire. For additional information, refer to Section 204-04 Wheels and Tires.
2. Remove the splash shield.

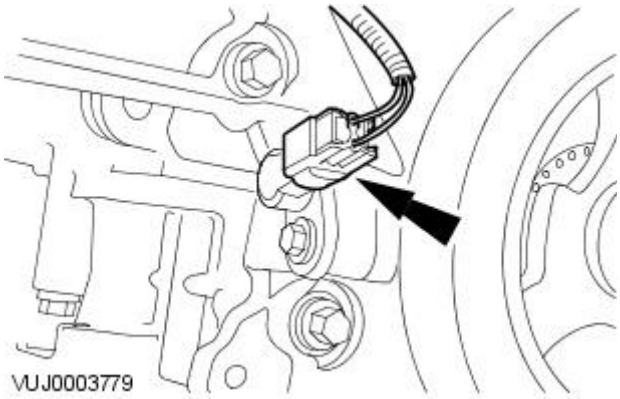

3. Disconnect the crankshaft position sensor (CKP) electrical connector.

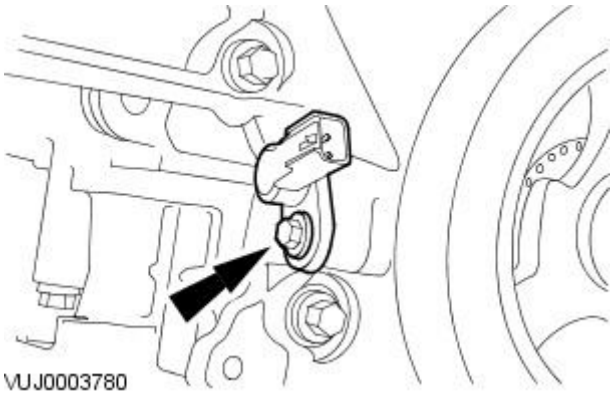

4. Remove the CKP sensor.

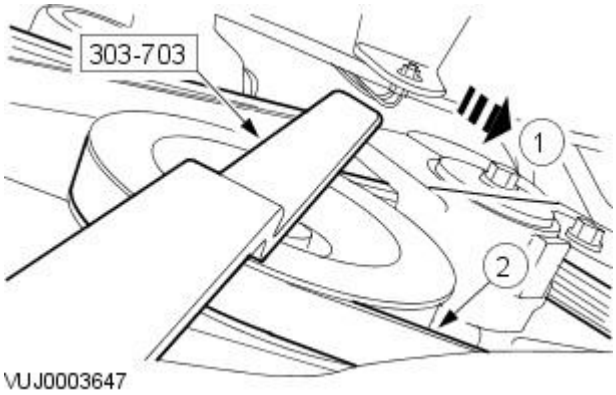

5. Detach the accessory drivebelt.

1. Using the special tool, rotate the belt tensioner counter clockwise.
2. Detach the accessory drivebelt.

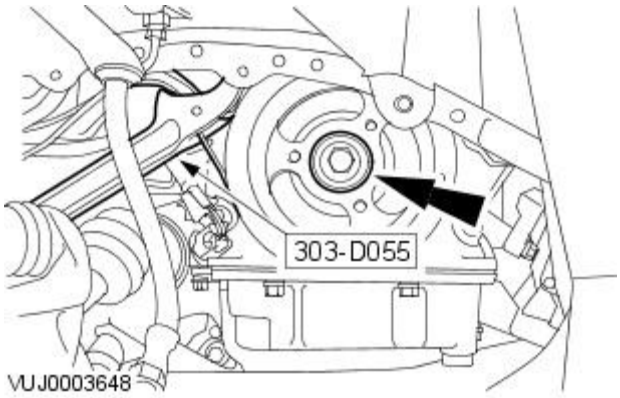

6. Using the special tool, remove the crankshaft vibration damper retaining bolt.

- Remove and discard the crankshaft vibration damper retaining bolt.

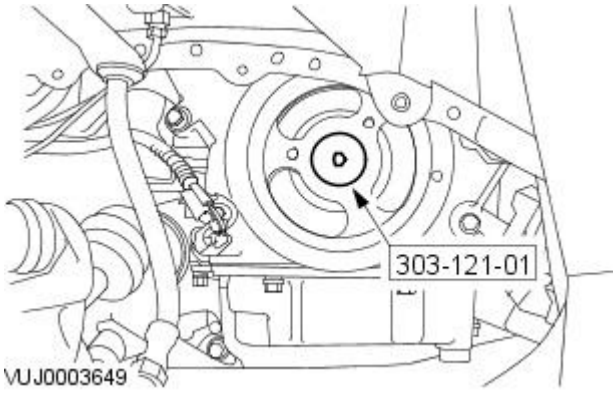

7. Install the special tool.

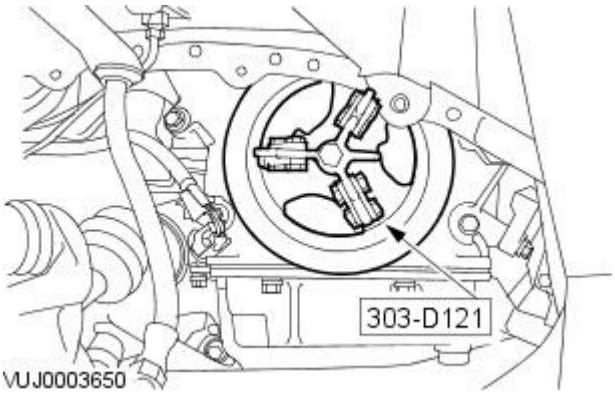

8. Using the special tools, remove the crankshaft vibration damper.

Installation

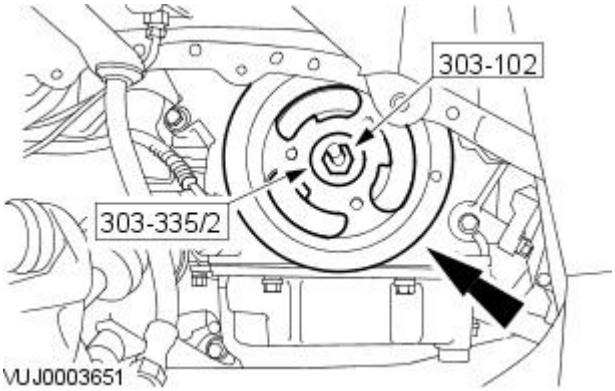

1. NOTE: Coat the crankshaft damper keyway with silicone gasket sealant WSE-M4G323-A6 or equivalent meeting Jaguar specification.

Using the special tool, install the crankshaft vibration damper.

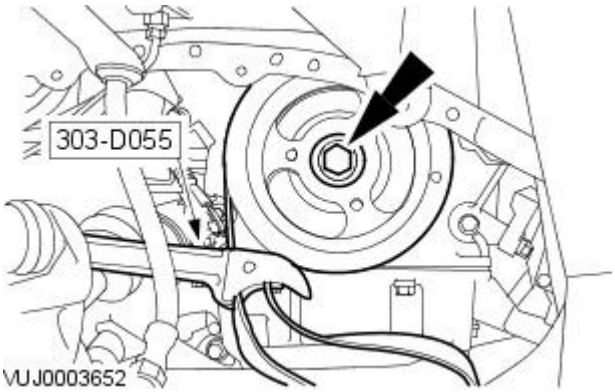

2. Using the special tool, tighten the crankshaft vibration damper retaining bolt.

- Install a new crankshaft vibration damper retaining bolt.
    1. Complete the tightening sequence.
    2. Stage 1: Torque to 120 Nm.
    3. Stage 2: Loosen the bolt (minimum 1 turn).
    4. Stage 3: Torque to 50 Nm.
    5. Stage 4: Angle Torque to 90°.

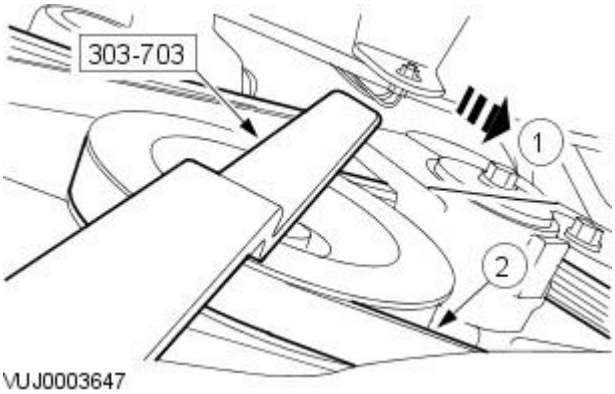

3. Attach the accessory drivebelt.

1. Using the special tool, rotate the belt tensioner counter-clockwise.
2. Attach the accessory drivebelt.

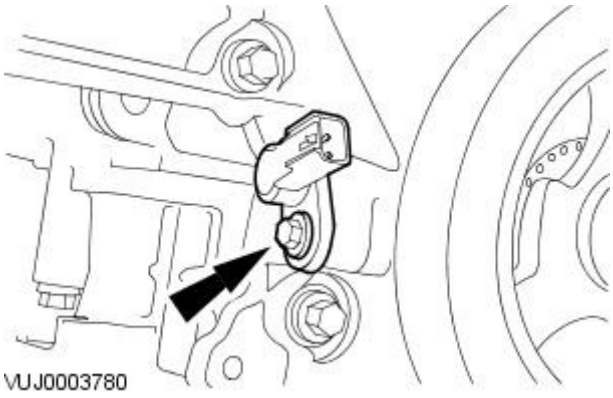

4. Install the CKP.

- Tighten to 10 Nm.

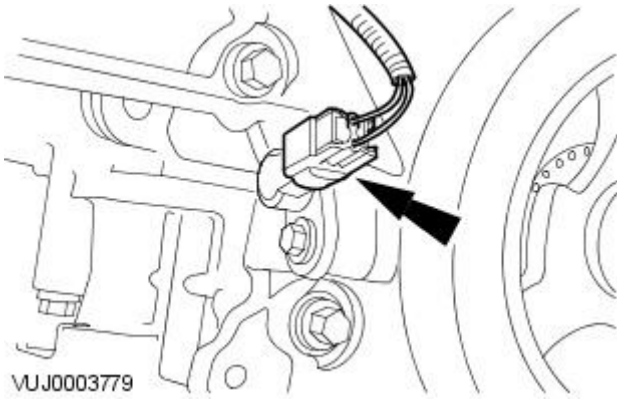

5. Connect the CKP electrical connector.

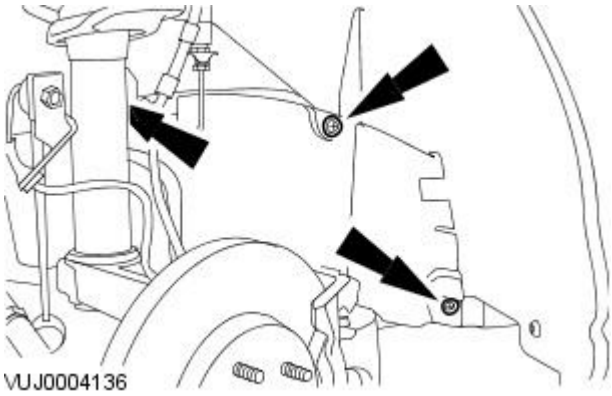

6. Install the splash shield.

7. Install the wheel and tire. For additional information, refer to Section 204-04 Wheels and Tires.

Engine - 2.0L NA V6 - AJV6 / 2.5L NA V6 - AJV6 / 3.0L NA V6 - AJ27 - Crankshaft Rear Seal

In-vehicle Repair

Special Tool(s)	
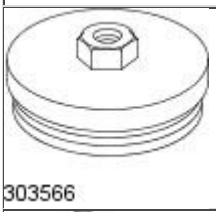 303566	Crankshaft Rear Seal Remover 303-566
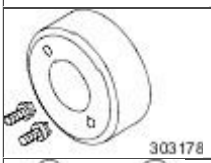 303178	Crankshaft Rear Seal Installer 303-178
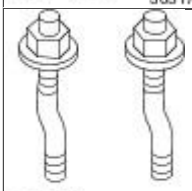 303384	Crankshaft Rear Seal Installer Adapter Bolts 303-384
303102 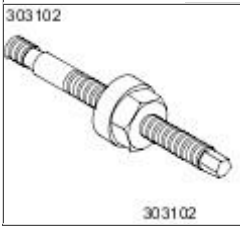 303102	Crankshaft Rear Seal Installer Draw Bolts 303-102

Removal

Vehicles With Manual Transmission

1. Remove the flywheel. For additional information, refer to Flywheel —Manual Transmission.

Vehicles With Automatic Transmission

2. Remove the flexplate. For additional information, refer to Flexplate —Automatic Transmission.

All Vehicles

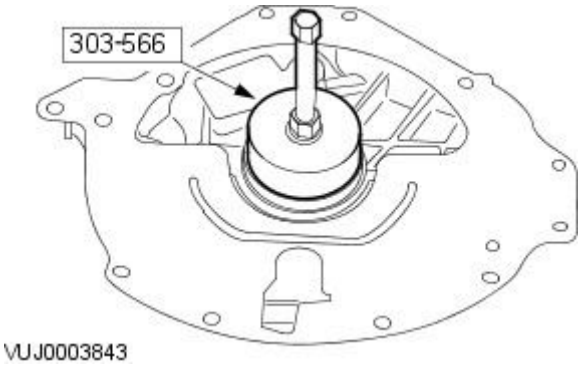

VUJ0003843

3. CAUTION: Avoid scratching or damaging the oil seal sealing surfaces on the crankshaft and cylinder block.

   Using the special tool, remove the crankshaft rear main oil seal.

Installation

All Vehicles

1. Clean and inspect the crankshaft rear oil seal sealing surfaces.
2. NOTE: Use oil WSE-M2C908-A or equivalent meeting Jaguar specification.

   Lubricate the seal lip with oil.

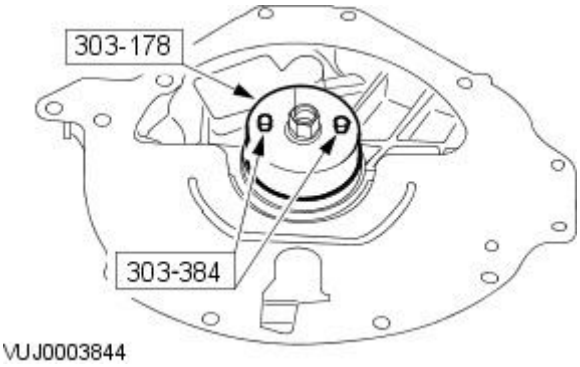

3. NOTE: Alternate bolt tightening to correctly seat the crankshaft rear oil seal until it is flush with the cylinder block.

Using the special tool, install the crankshaft rear oil seal.

Vehicles With Manual Transmission

4. Install the flywheel. For additional information, refer to Flywheel —Manual Transmission.

Vehicles With Automatic Transmission

5. Install the flexplate. For additional information, refer to Flexplate —Automatic Transmission.

Engine - 2.0L NA V6 - AJV6 / 2.5L NA V6 - AJV6 / 3.0L NA V6 - AJ27 - Cylinder Head LH

In-vehicle Repair

Removal

Vehicles with 2.5L or 3.0L engine

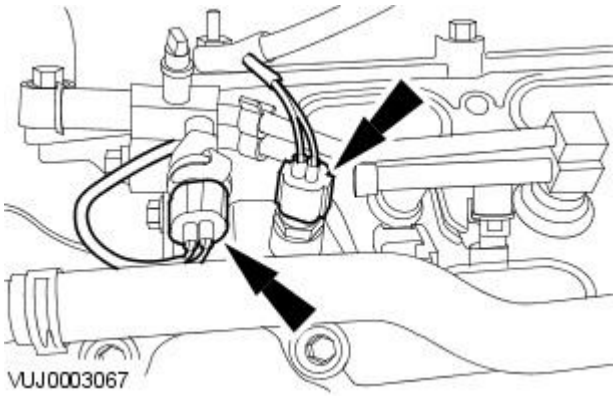

1. Disconnect the engine coolant temperature (ECT) and fuel temperature sensor (FTS) electrical connectors.

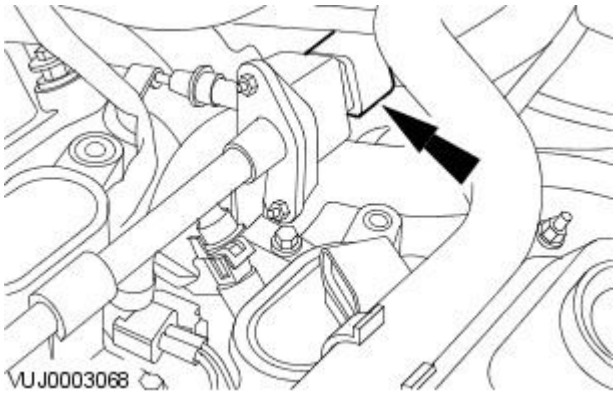

2. Disconnect the electrical connector.

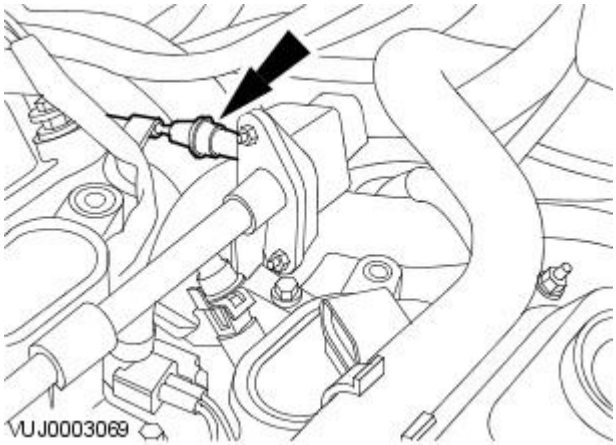

3. Detach fuel sensor vacuum line.

Vehicles with 2.0L engine

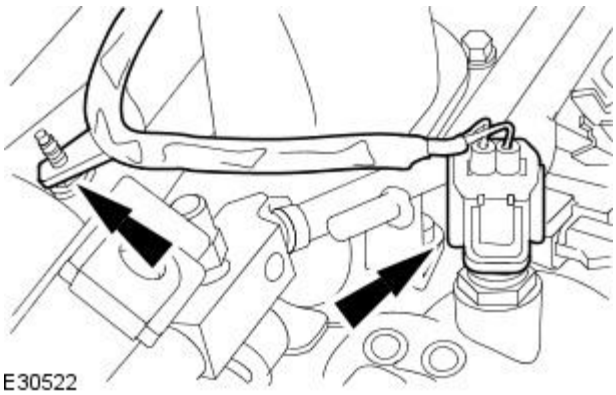

4. Disconnect the coolant temperature (ECT) electrical connector.

All vehicles

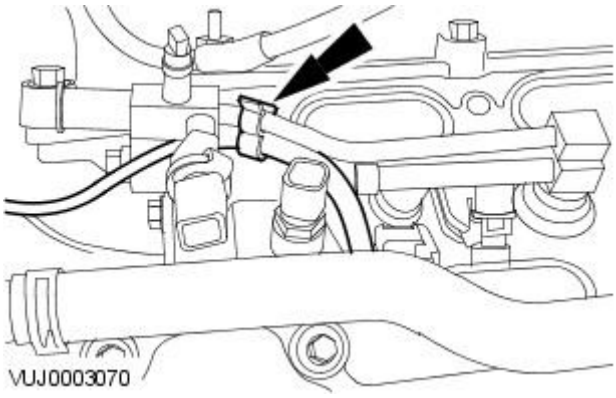

5. Detach the fuel charging wiring harness.

- 2.5 and 3.0L shown, 2.0L similar.

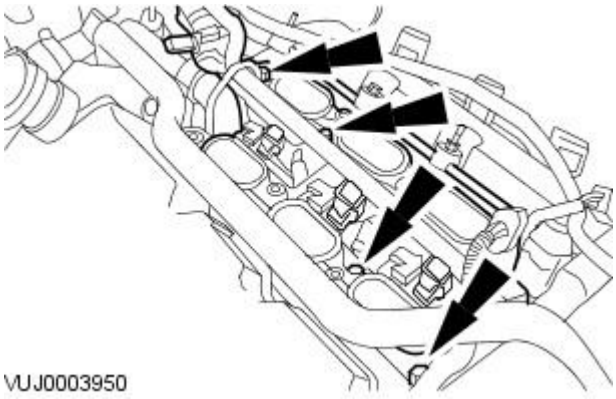

6. WARNING: Fuel may still be present in the fuel injection supply manifold, extreme care must be taken as this could cause personal injury.

Detach the fuel injection supply manifold, lower intake manifold and place to one side.

- Remove and discard the lower intake manifold seals.
  1. 2.5 and 3.0L shown, 2.0L similar.

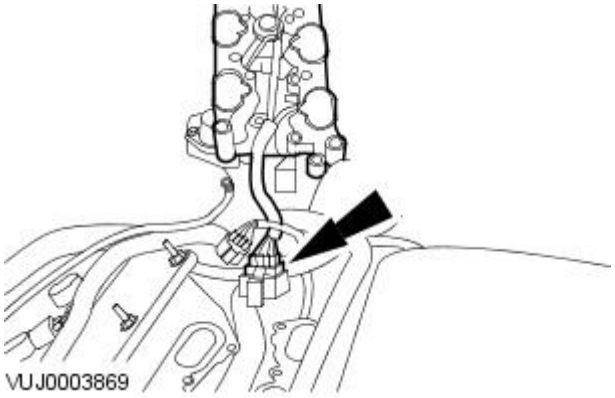

7. Remove the fuel injection supply manifold and lower intake manifold.

- Disconnect the electrical connector.

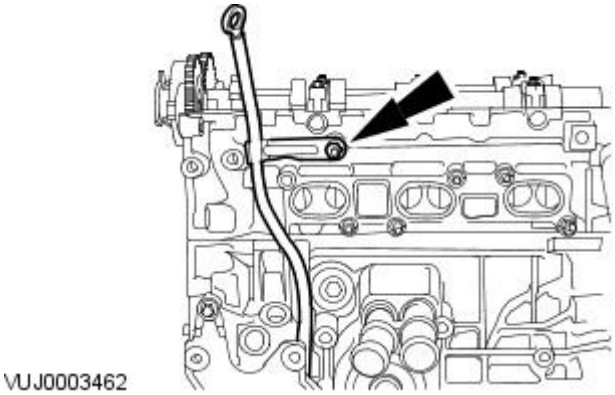

8. Remove the oil level indicator tube.

- Remove and discard the oil level indicator tube O-ring seal.

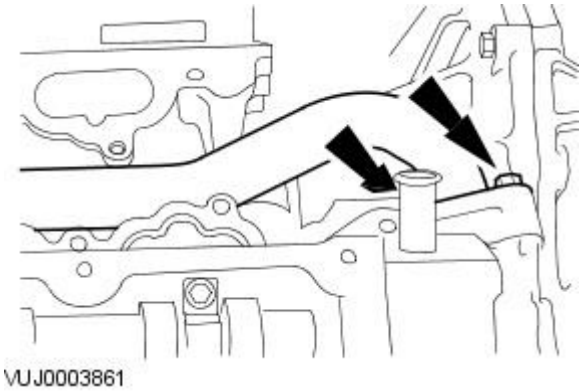

9. Remove the water pump outlet pipe.

- Remove and discard the water pump outlet pipe O-ring seals.

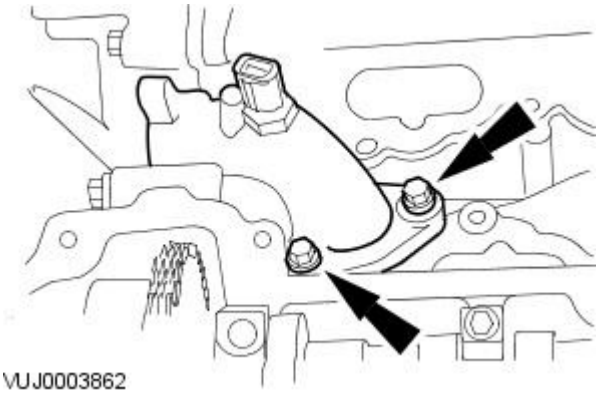

10. Remove the coolant bypass tube.

- Remove and discard the coolant bypass tube O-ring seals.

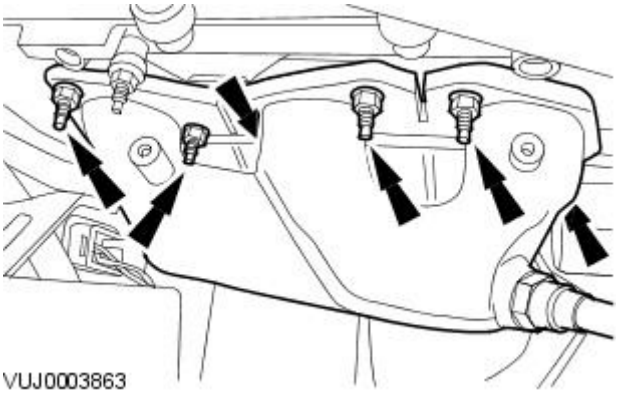

11. Remove the exhaust manifold.

- Remove and discard the exhaust manifold gasket.

12. Remove the left-hand camshafts. For additional information, refer to Camshaft.

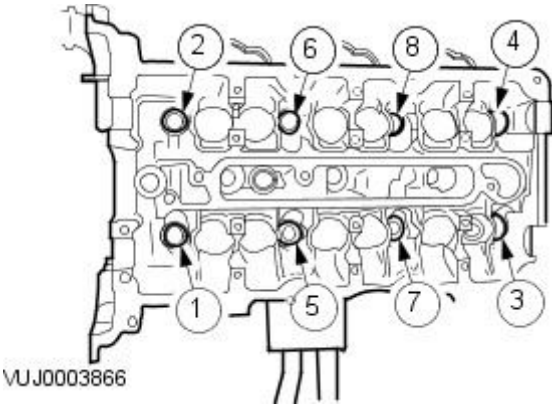

13. NOTE: Remove the bolts in the indicated sequence.

Remove the cylinder head.

- Remove and discard the cylinder head gasket.

14. Clean and inspect the cylinder head and cylinder block. For additional information, refer to Section 303-00 Engine System - General Information.

Installation

All vehicles

1. NOTE: The head gaskets must be installed over the cylinder block dowels.

Install a new cylinder head gasket.

2. CAUTION: Use care when installing the cylinder head. Damage to the cylinder block, cylinder head or the cylinder head gasket may result.

3. Install the left-hand camshafts. For additional information, refer to Camshaft.

4. Install the exhaust manifold.

- Install the new exhaust manifold gasket.

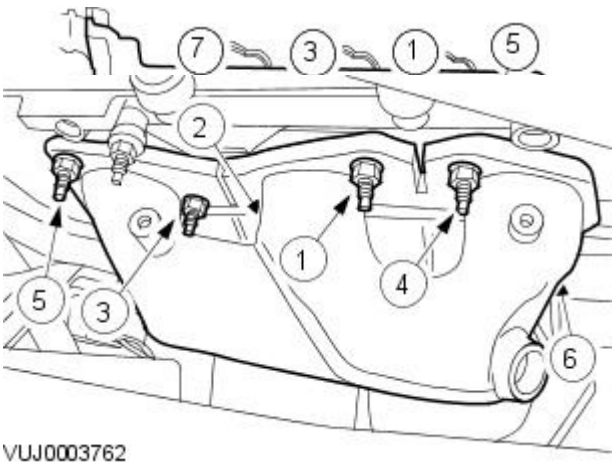

- NOTE: Make sure the cylinder head is installed in its original position.

Position the cylinder head and install new cylinder head bolts and washers.

- NOTE: Tighten the bolts in the indicated sequence in six stages.

- Stage 1: Tighten to 30 Nm.
- Stage 2: Tighten 90 degrees.
- Stage 3: Loosen 360 degrees (one full turn) in reverse order.
- Stage 4: Tighten to 30 Nm.
- Stage 5: Tighten 90 degrees.
- Stage 6: Tighten 90 degrees.

- Complete the tightening sequence.
- Tighten to 20 Nm.

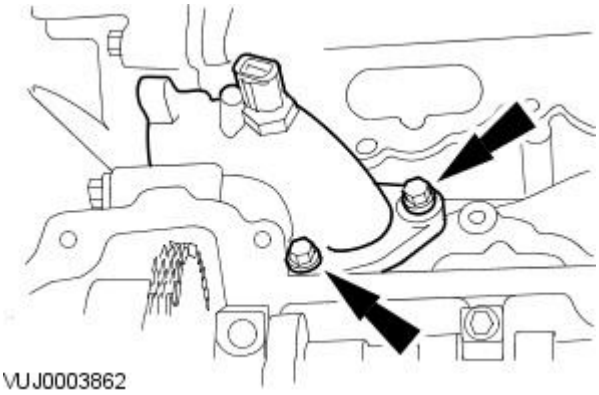

5. Install the coolant bypass tube.

- Install the new coolant bypass tube O-ring seals.
- Tighten to 10 Nm.

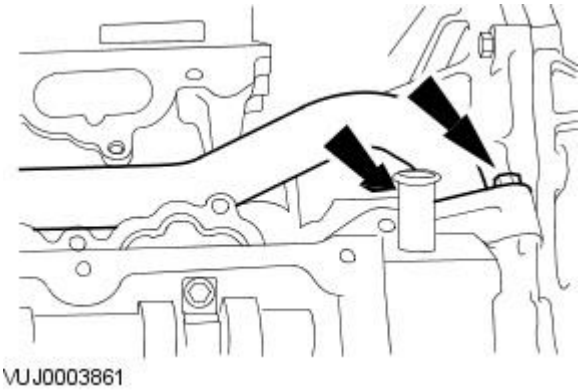

6. Install the water pump outlet pipe.

- Install the new water pump outlet pipe O-ring seals.
- Tighten to 10 Nm.

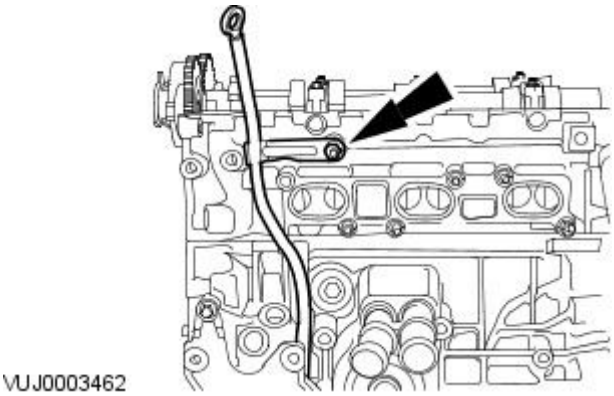

7. Install the oil level indicator tube.

- Install a new O-ring seal.
- Tighten to 10 Nm.

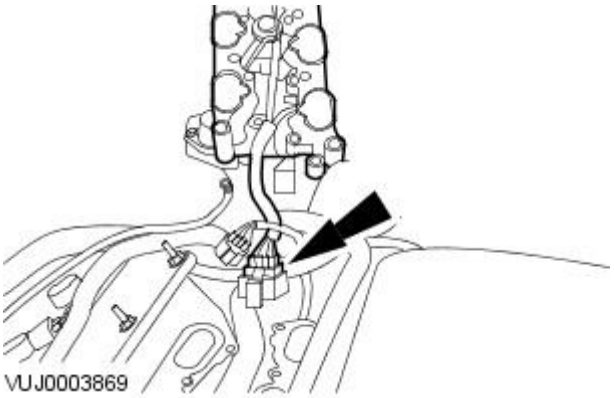

8. Attach the fuel injection supply manifold and lower intake manifold.

- Connect the electrical connector.

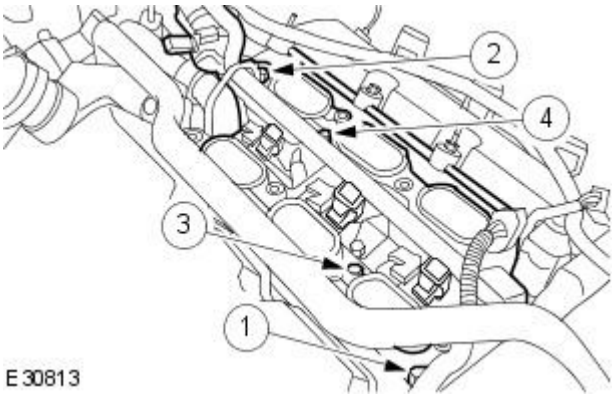

9. Install the fuel injection supply manifold, lower intake manifold.

- Install new lower intake manifold O-ring seals.
- Tighten in the sequence shown.
- Tighten to 10 Nm.

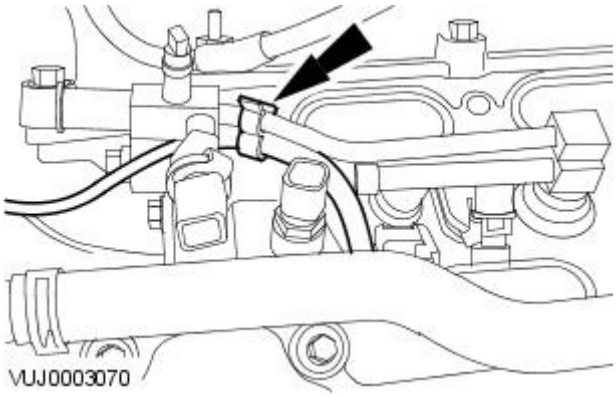

10. Attach the fuel charging wiring harness.

- 2.5 and 3.0L shown, 2.0L similar.

Vehicles with 2.0L engine

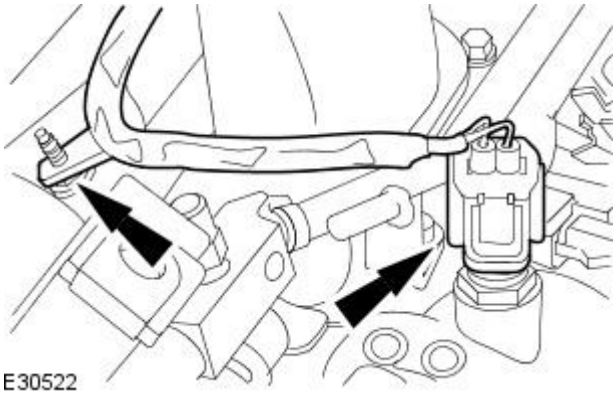

11. Connect the coolant temperature (ECT) electrical connector.

Vehicles with 2.5L or 3.0L engine

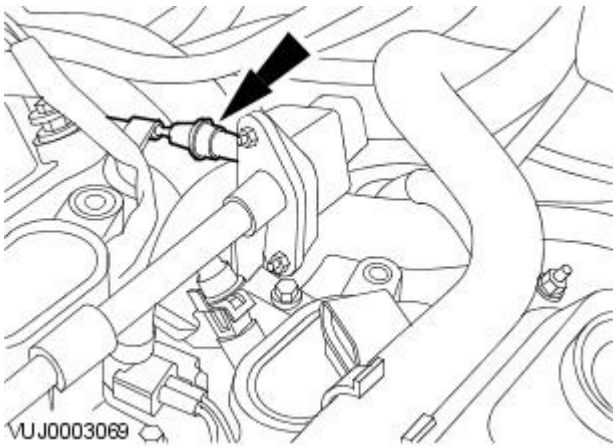

12. Attach the fuel sensor vacuum line.

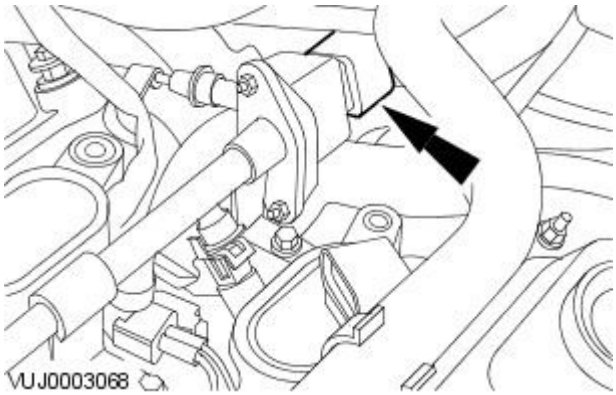

13. Connect the electrical connector.

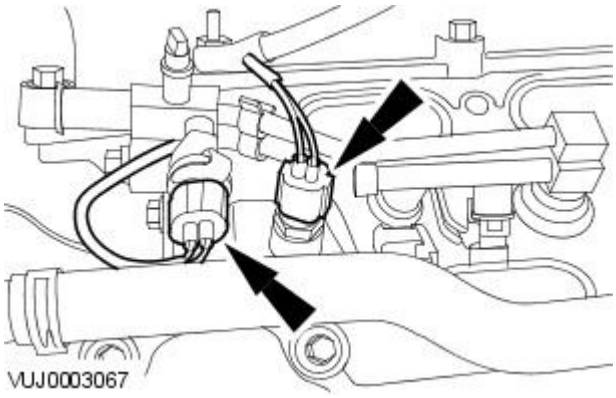

14. Connect the engine coolant temperature (ECT) and fuel temperature sensor (FTS) electrical connectors.

Engine - 2.0L NA V6 - AJV6 / 2.5L NA V6 - AJV6 / 3.0L NA V6 - AJ27 - Engine Front Cover

In-vehicle Repair

Removal

CAUTION: It is necessary to remove the engine in order to remove the engine front cover.

All vehicles

1. Using a suitable container drain the engine oil.
2. Remove the automatic or manual transmission. For additional information, refer to Section 307-01A Automatic Transmission/TransaxleSection 307-01B Automatic Transmission/Transaxle or Section 308-03 Manual Transmission/Transaxle.

Vehicles with 2.5L or 3.0L engine

3. Detach the positive crank case ventilation hose.

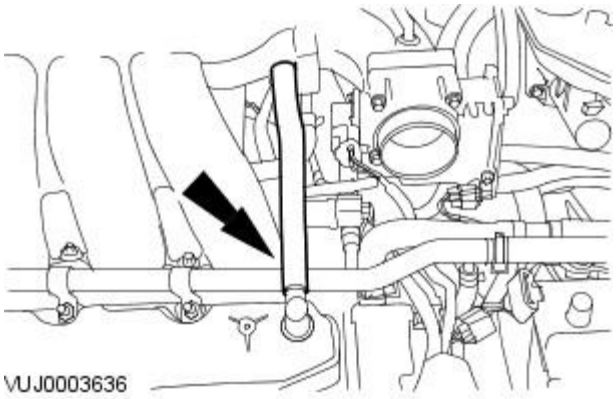

Vehicles with 2.0L engine

4. Detach the positive crank case ventilation hose.

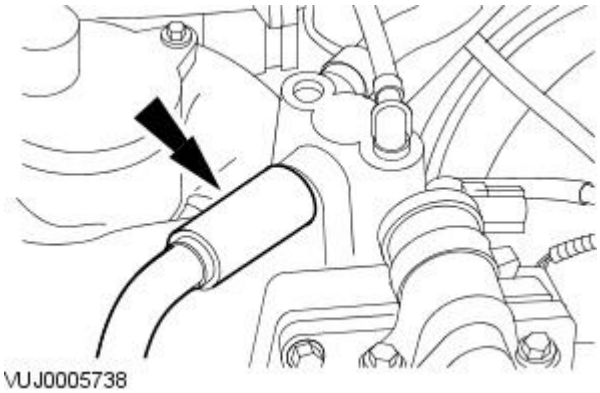

5. Disconnect the idle actuator control valve electrical connector.

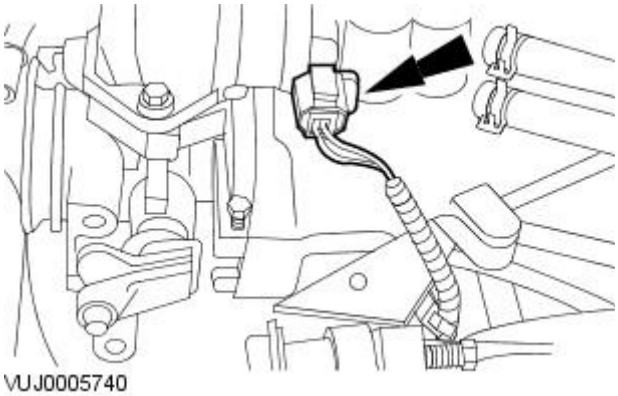

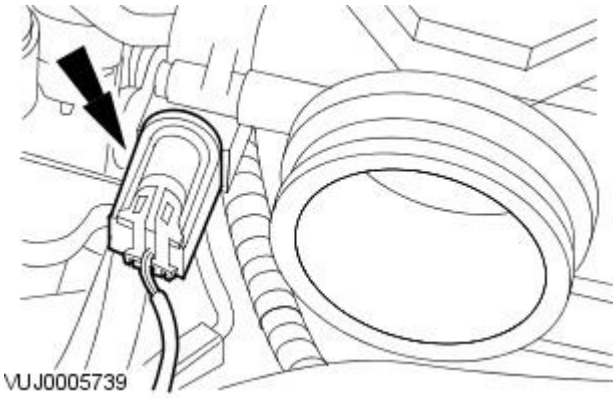

6. Disconnect the throttle position sensor electrical connector.

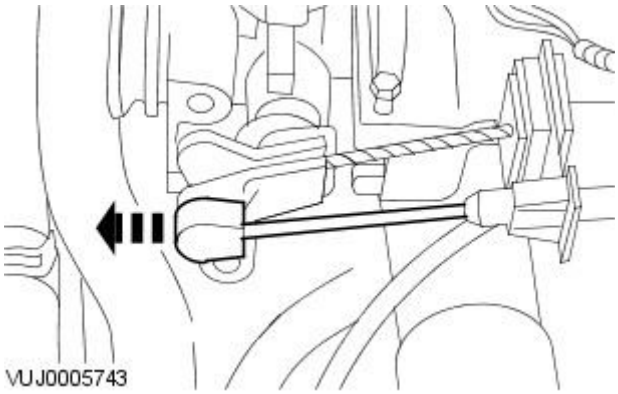

7. Detach the cruise control cable.

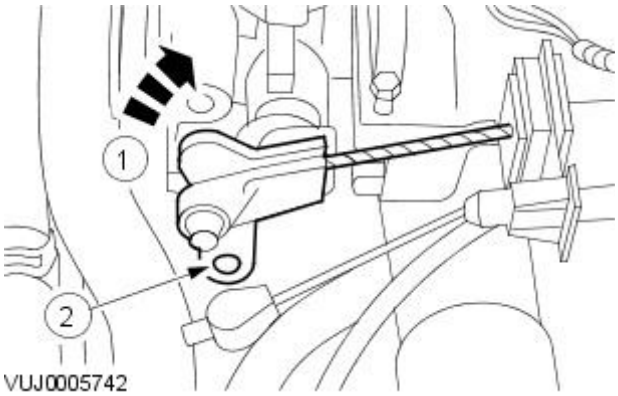

8. Detach the throttle cable.

1. Reposition the throttle lever to the fully open position.
2. Detach the throttle cable.

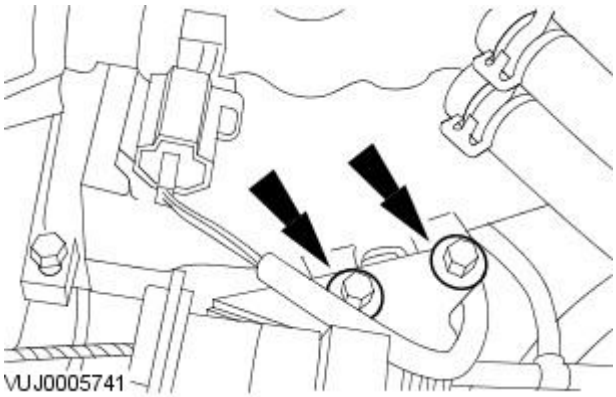

9. Detach the throttle cable retaining bracket.

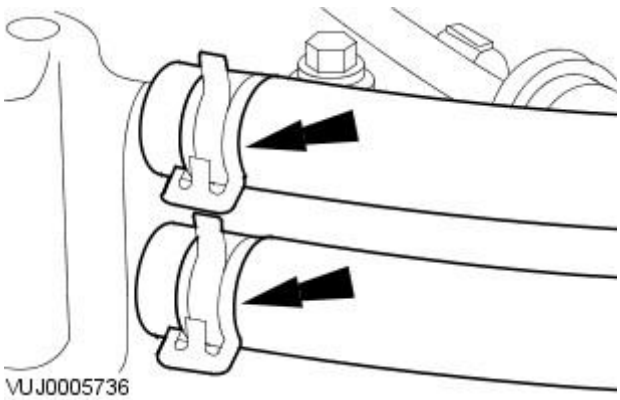

10. Detach the coolant hoses.

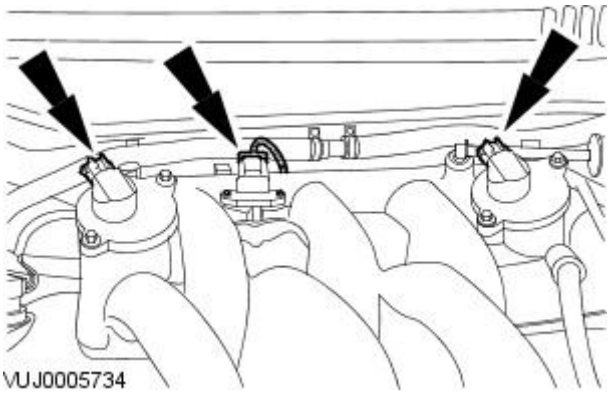

11. Disconnect the electrical connectors.

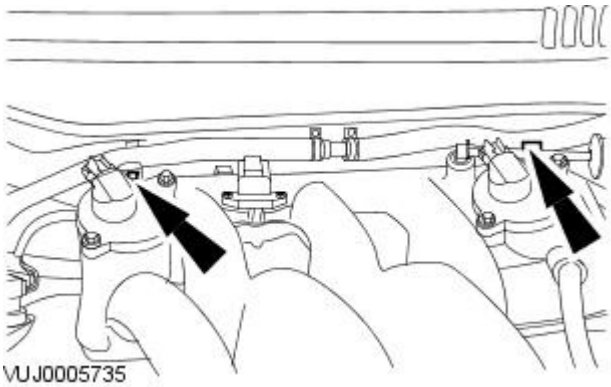

12. Detach the wiring harness.

Vehicles with 2.5L or 3.0L engine

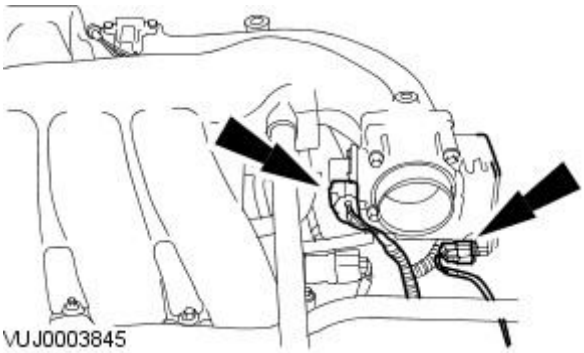

13. Disconnect the electrical connectors.

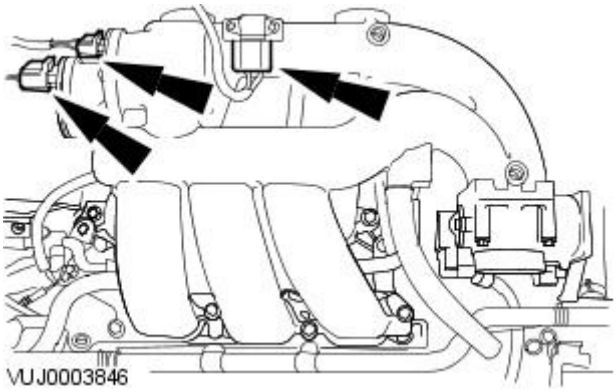

14. Disconnect the electrical connectors.

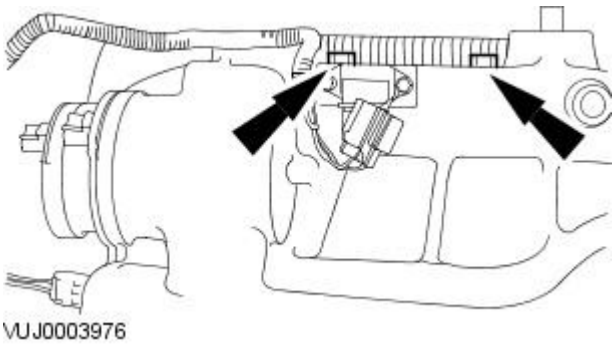

15. Detach the wiring harness.

16. Detach the vacuum hose.

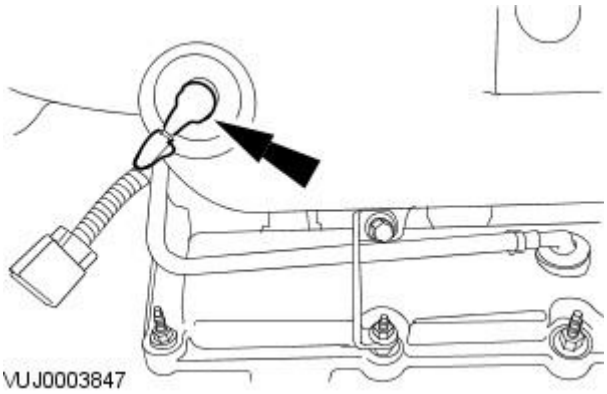

All vehicles

17. NOTE: 2.5L and 3.0L shown, 2.0L similar.

Remove the intake manifold support bracket.

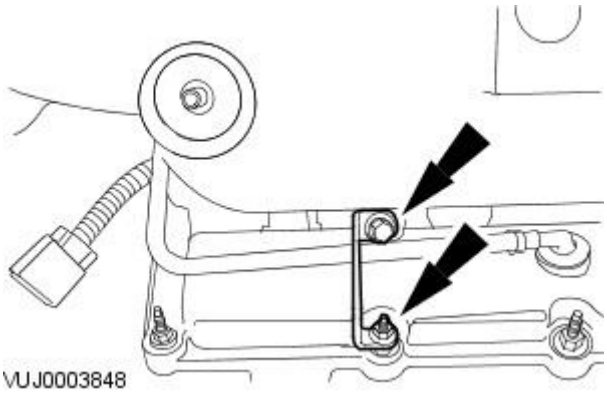

18. NOTE: 2.5L and 3.0L shown, 2.0L similar.

Remove the intake manifold support bracket.

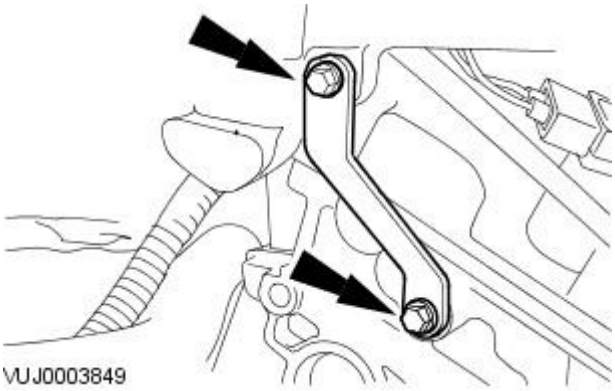

19. NOTE: 2.5L and 3.0L shown, 2.0L similar.

Remove the intake manifold.

- Remove and discard the intake manifold gaskets.

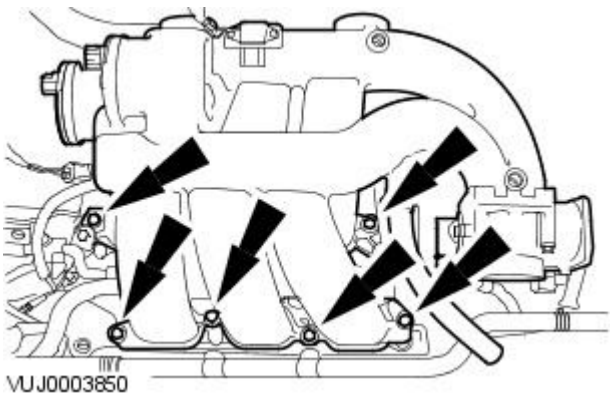

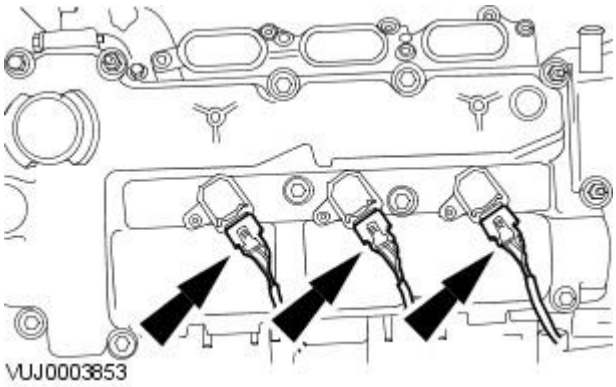

20. Disconnect the left-hand ignition coil electrical connectors.

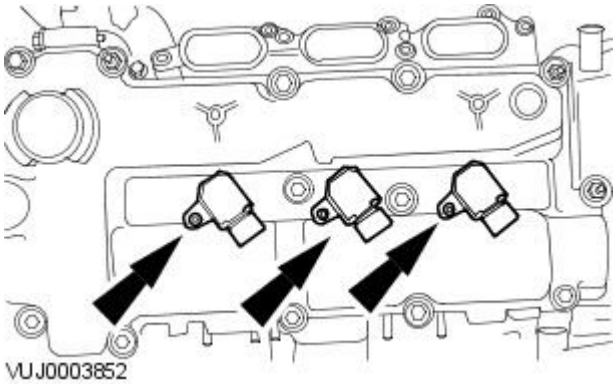

21. Remove the left-hand ignition coils.

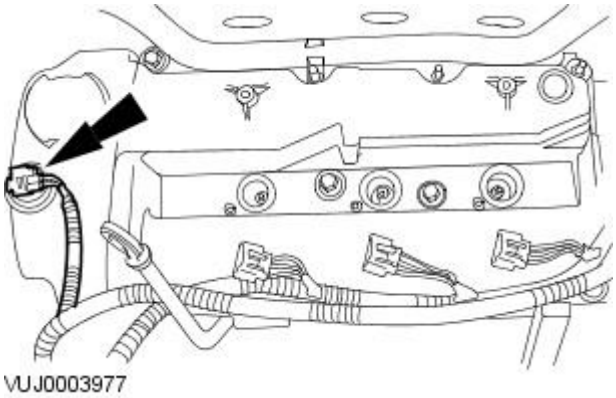

22. Disconnect the variable camshaft timing (VCT) solenoid electrical connector.

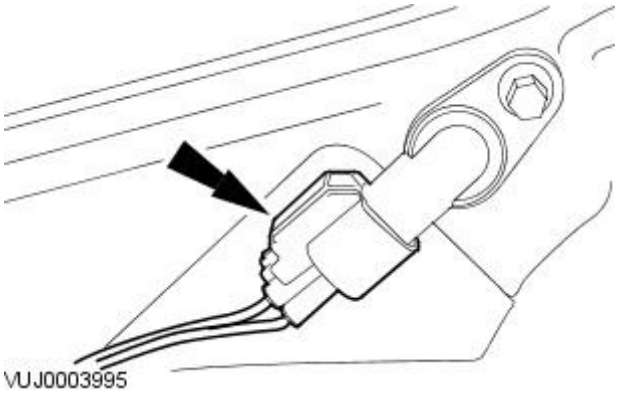

23. NOTE: Right-hand shown, left-hand similar.

Disconnect the camshaft position sensor electrical connectors.

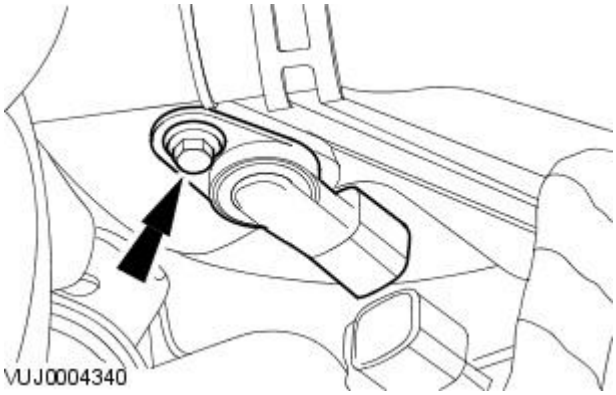

24. NOTE: Right-hand shown, left-hand similar.

Remove the (CMP) sensors.

25. Reposition the left-hand wiring harness for access to the valve cover.

Vehicles with 2.0L engine

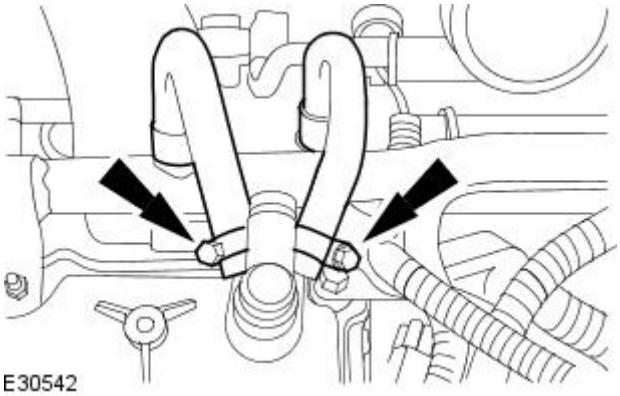

26. Detach the heated positive crankcase ventilation valve coolant hoses.

All vehicles

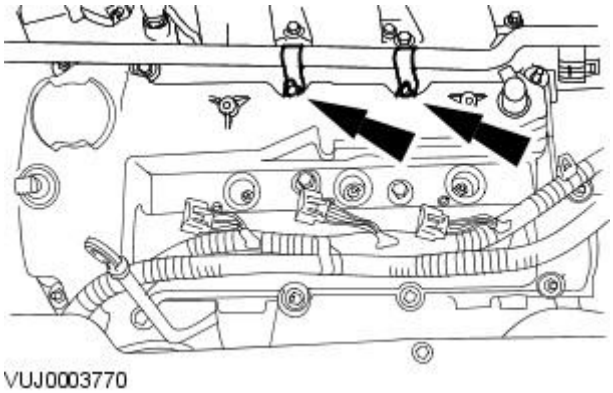

27. NOTE: 2.5L and 3.0L shown, 2.0L similar.

Detach the coolant hose.

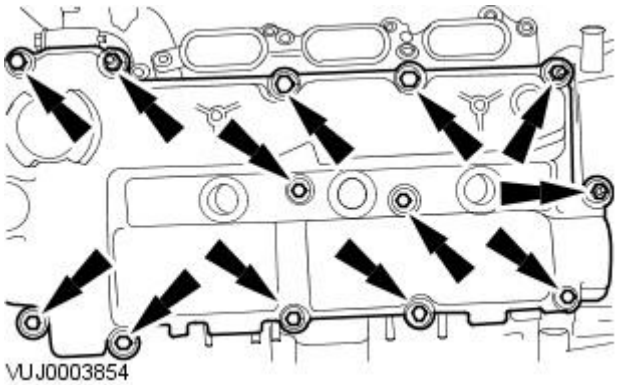

28. Remove the left-hand valve cover.

- Remove and discard the valve cover gaskets.

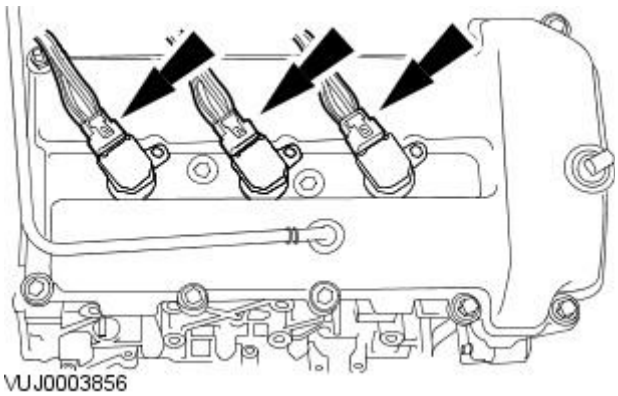

29. Disconnect the right-hand ignition coil electrical connectors.

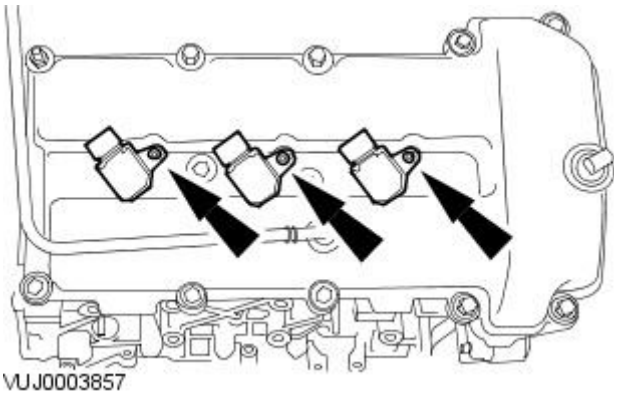

30. Remove the right-hand ignition coils.

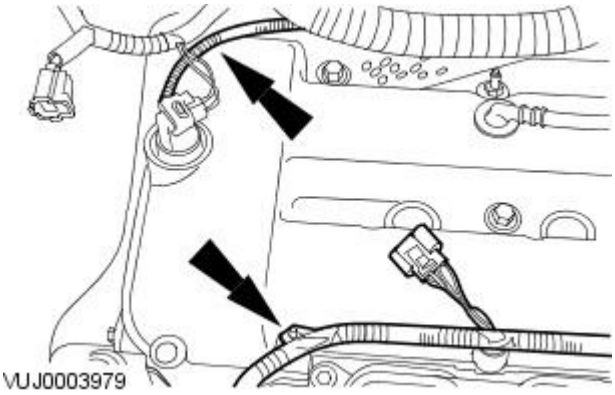

31. Detach the wiring harness.

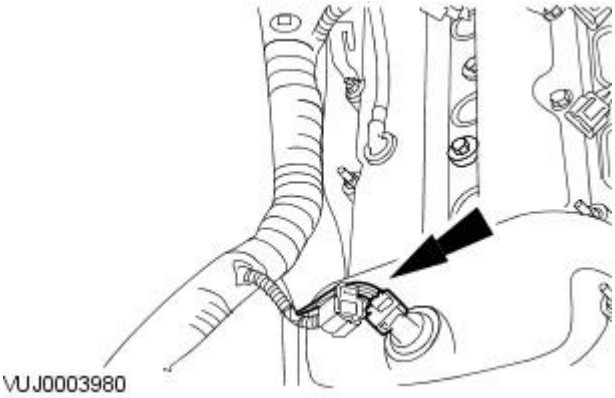

32. Disconnect and reposition the variable camshaft timing (VCT) solenoid electrical connector.

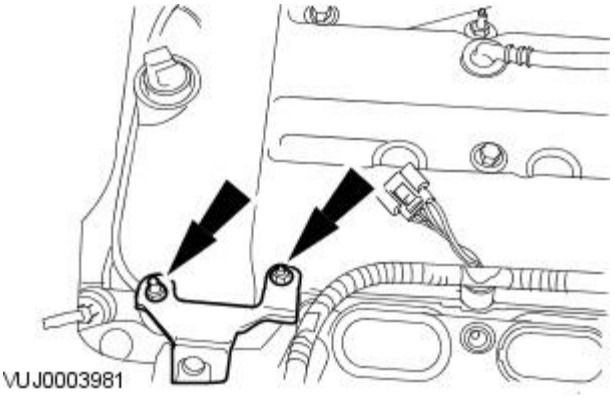

33. Remove the engine cover retaining bracket.

34. Reposition the right-hand wiring harness for access to the valve cover.

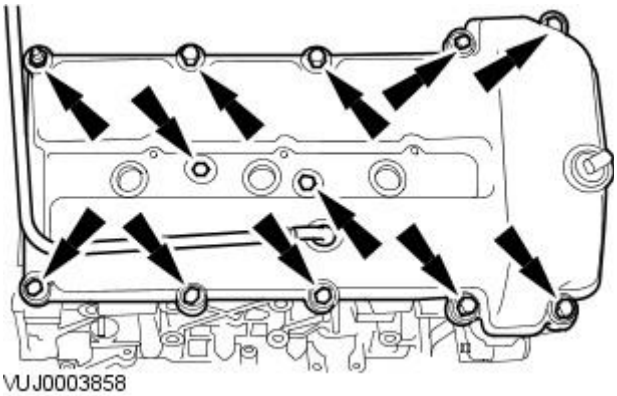

35. Remove the right-hand valve cover.

- Remove and discard the valve cover gaskets.

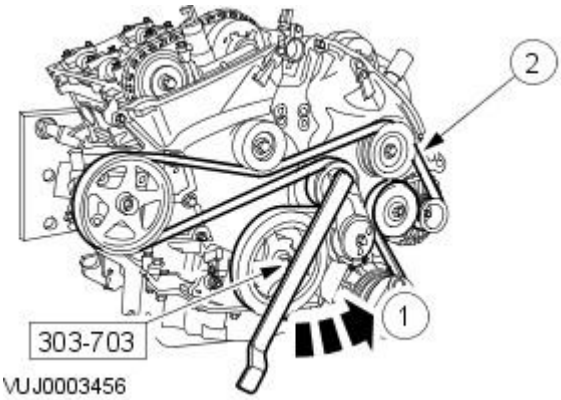

36. Detach the accessory drivebelt.

1. Using the special tool, rotate the belt tensioner counter-clockwise.
2. Detach the accessory drivebelt.

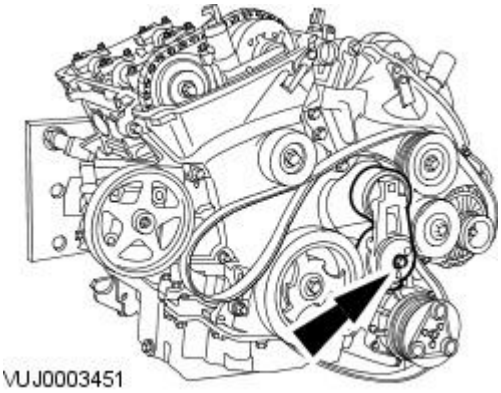

37. Remove the accessory drive belt tensioner.

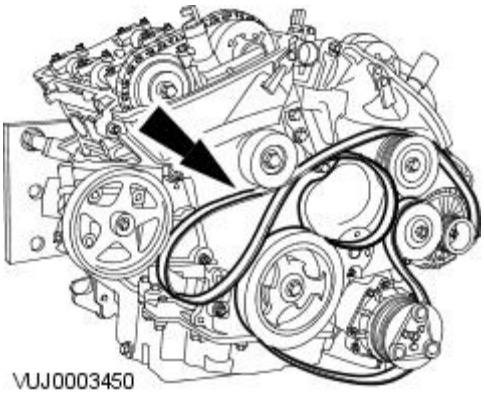

38. Remove the accessory drive belt.

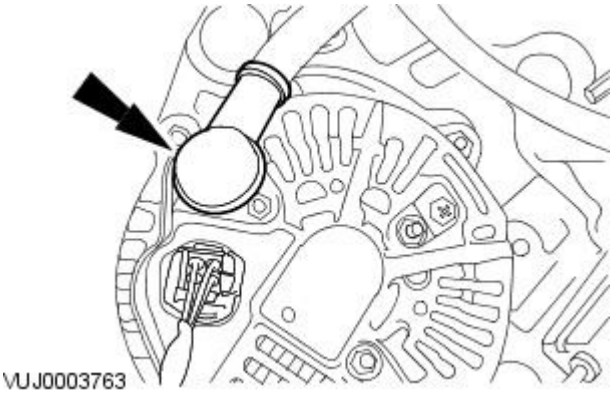

39. Detach the generator positive cable protective cover.

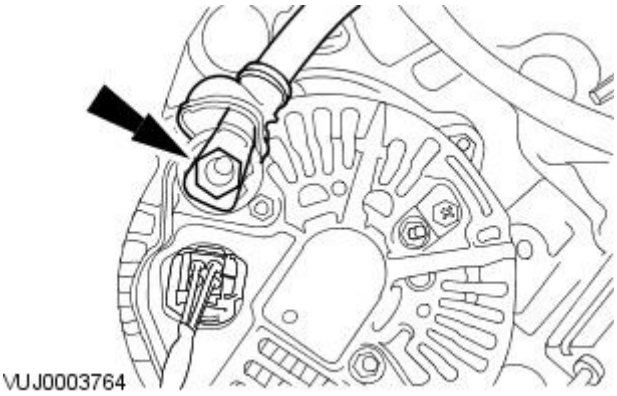

40. Disconnect the generator positive cable electrical connector.

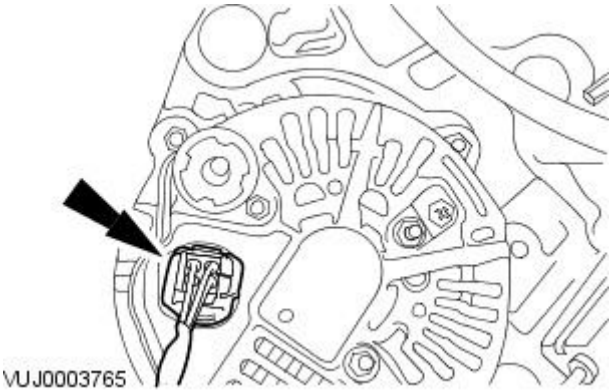

41. Disconnect the generator electrical connector.

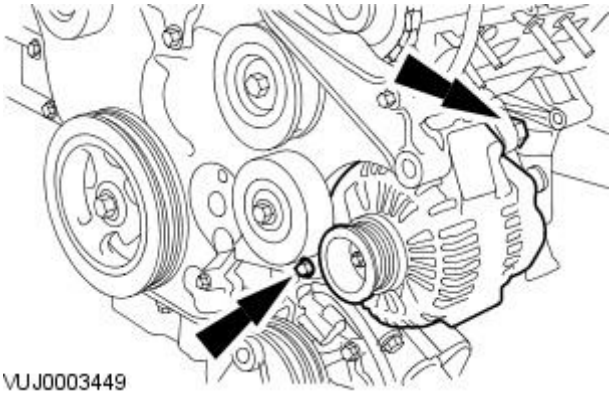

42. Remove the generator.

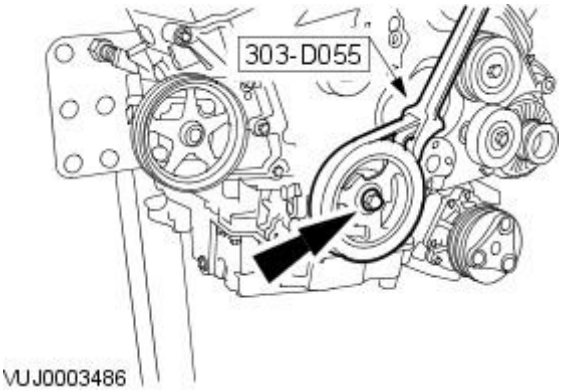

43. Using the special tool, remove the crankshaft vibration damper retaining bolt.

- Remove and discard the crankshaft vibration damper retaining bolt.

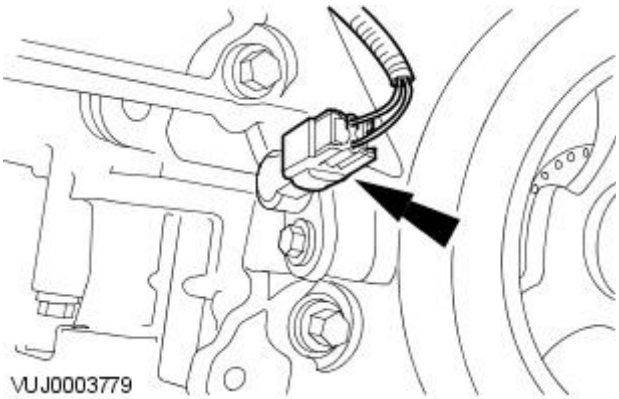

44. Disconnect the crankshaft position (CKP) sensor electrical connector.

45. Remove the CKP.

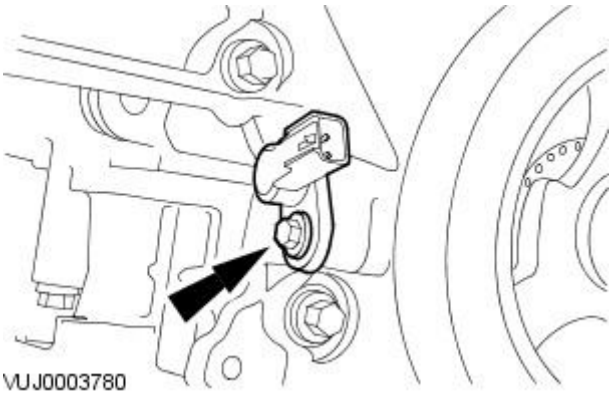

46. Install the special tool.

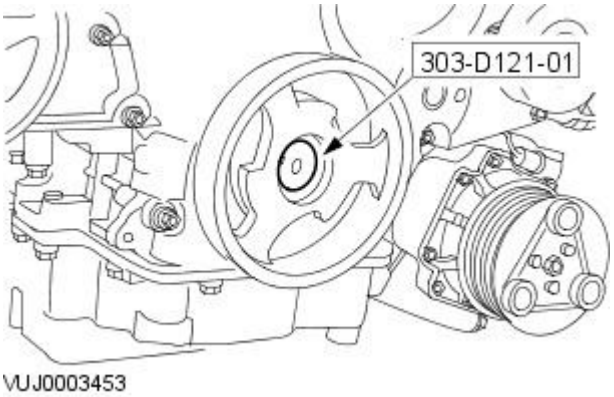

47. Using the special tools, remove the crankshaft vibration damper.

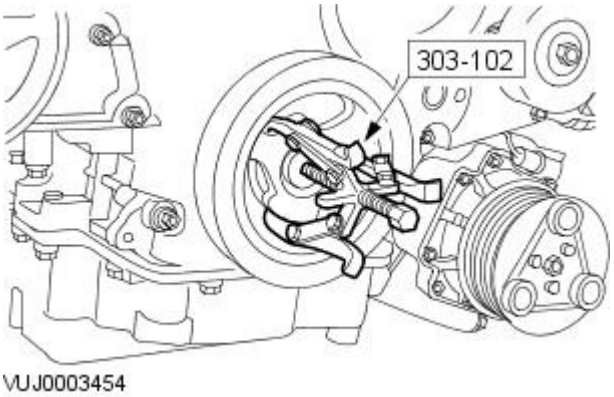

48. Remove the air conditioning compressor.

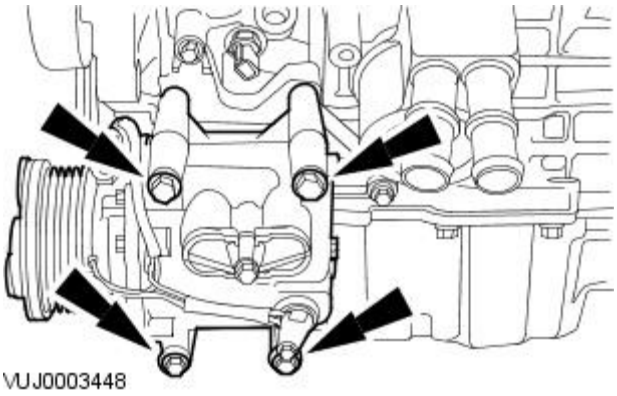

49. Remove the power steering pump.

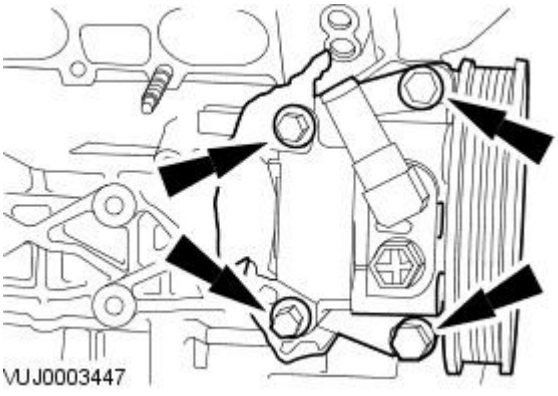

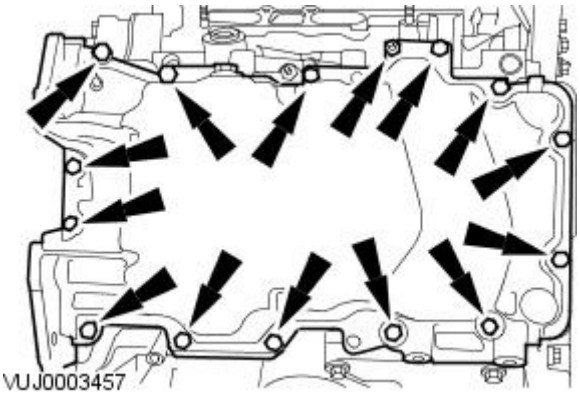

50. Remove the oil pan.

- Remove and discard the oil pan gasket.

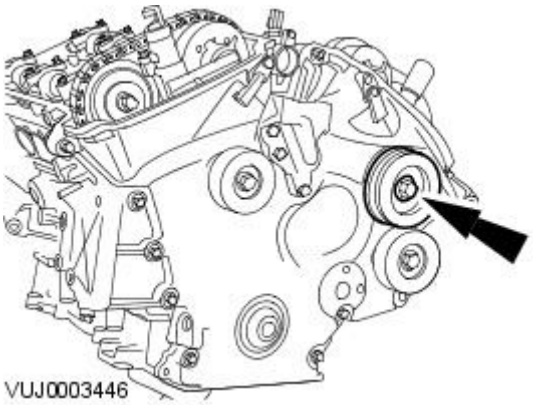

51. Remove the idler pulley.

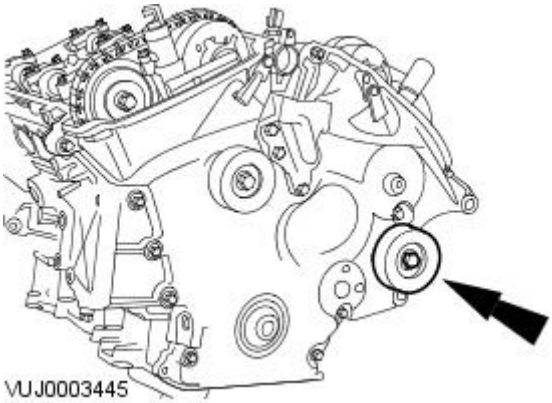

52. Remove the idler pulley.

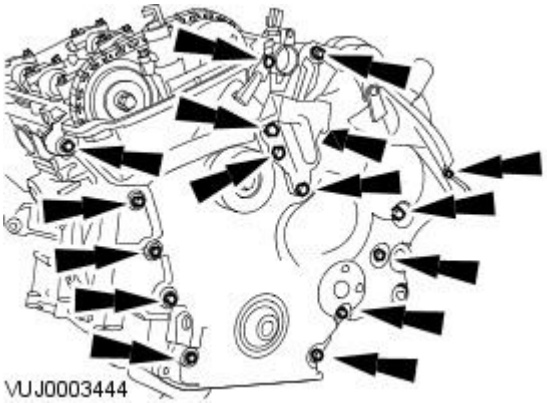

53. Remove the engine front cover.

- Remove and discard the engine front cover gaskets.

Installation

All vehicles

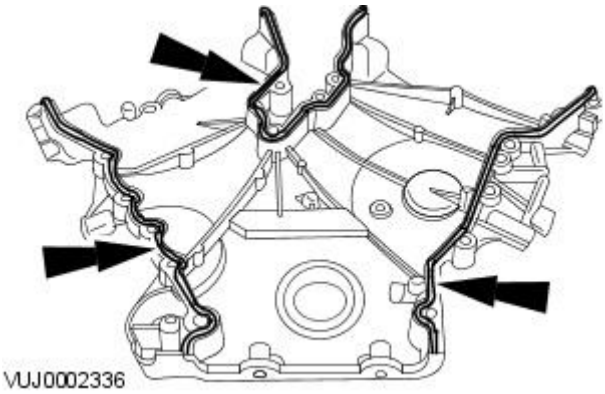

1. Install the new front timing cover gaskets.

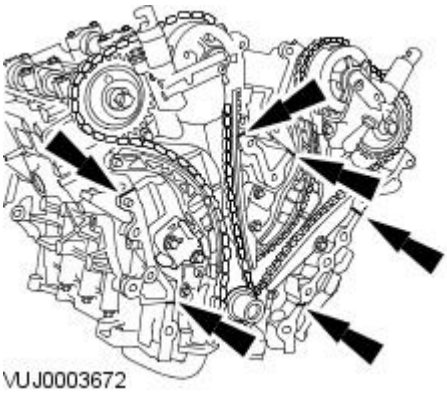

2. NOTE: Prior to applying sealer clean the front timing cover to engine block and cylinder head sealing surfaces with metal surface cleaner.

• NOTE: Apply a 6 mm diameter dot of silicone sealant WSE-M4G323-A6 or equivalent meeting Jaguar specification to the indicated locations.

Apply silicone sealant to the indicated locations.

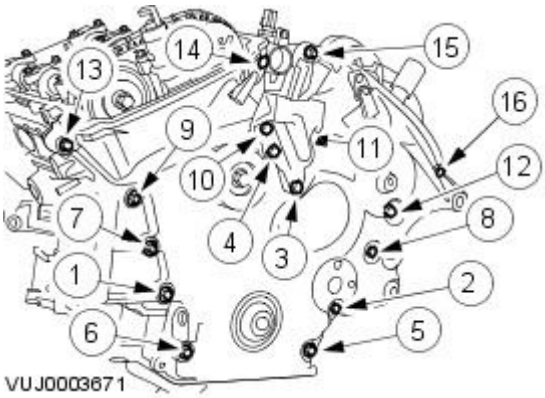

3. NOTE: The front timing cover retaining bolts numbered 3, 4, 10 and 11 are longer than the retaining bolts numbered 1, 2, 5, 6, 7, 8, 9, 12, 13, 15 and 16. The retaining bolt in number 14 is a retaining bolt with a stud head.

Complete the tightening sequence.

- Stage 1: Bolts 1 and 2, 25 Nm.
- Stage 2: Bolts 3 and 4, 30 Nm + 45°.
- Stage 3: Bolts 5 through 9, 25 Nm.
- Stage 4: Bolts 10 and 11, 30 Nm + 45°.
- Stage 5: Bolts 12 and 13, 25 Nm.
- Stage 6: Bolt 14, 25 Nm.
- Stage 7: Bolts 15 and 16, 25 Nm.

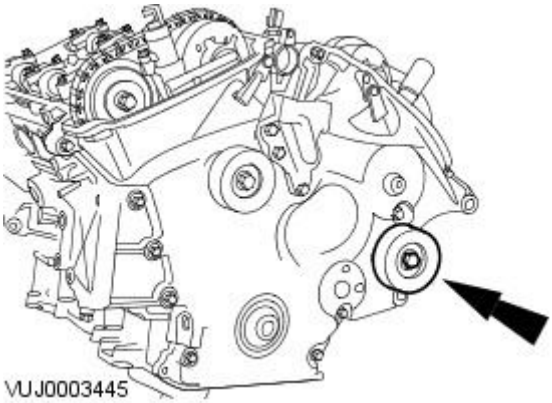

4. Install the idler pulley.

- Tighten to 47 Nm.

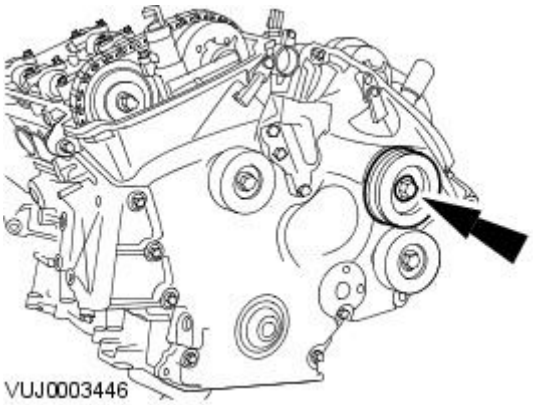

5. Install the idler pulley.

- Tighten to 25 Nm.

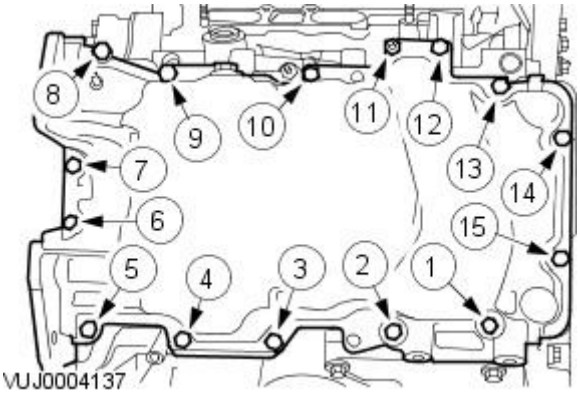

6. NOTE: Apply a 10 mm diameter dot of silicone sealant WSE-M4G323-A6 or equivalent meeting Jaguar specification to the engine front cover to the cylinder block mating joints.

• NOTE: Loosely install the oil pan to transmission housing bolts.

• NOTE: The oil pan retaining bolts numbered 1 and 2 are longer than the retaining bolts numbered 3 through 15.

• NOTE: Tighten the oil pan bolts within six minutes of applying sealer.

Install the oil pan.

- Install the new oil pan gasket.
- Complete the tightening sequence.
- Tighten to 25 Nm.

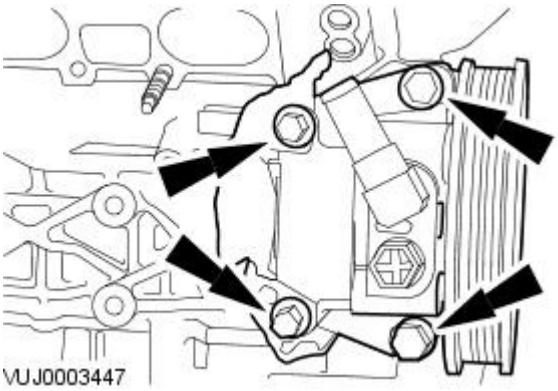

7. Install the power steering pump.

- Tighten to 25 Nm.

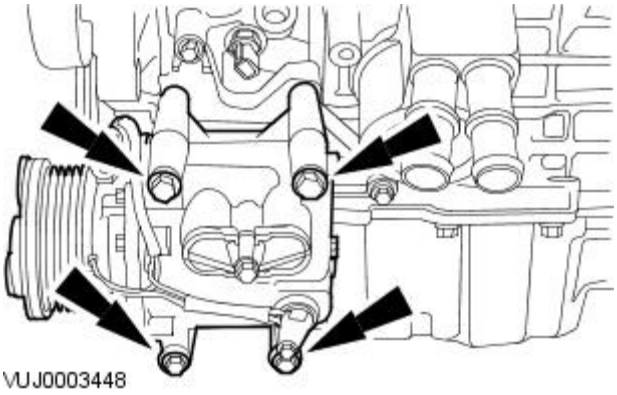

8. Install the air conditioning compressor.

- Tighten to 25 Nm.

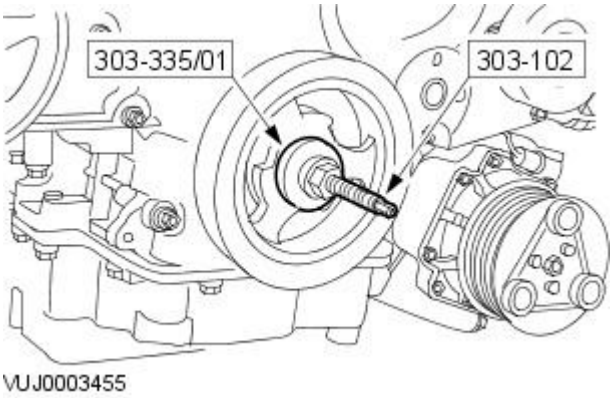

9. Using the special tool, install the crankshaft vibration damper.

- Coat the crankshaft damper keyway with silicone gasket sealant WSE-M4G323-A6 or equivalent meeting Jaguar specification.

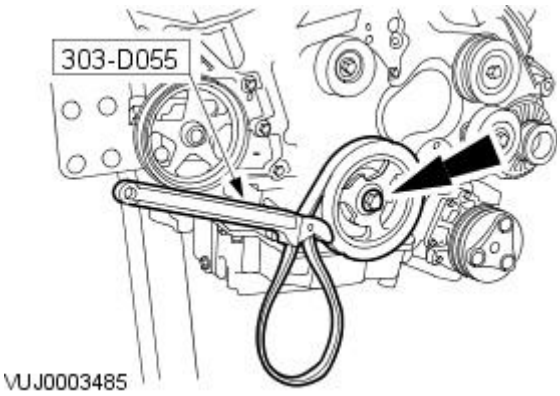

10. Using the special tool, tighten the crankshaft vibration damper retaining bolt.

- Install a new crankshaft vibration retaining bolt.
- Complete the tightening sequence.
- Stage 1: Torque to 120 Nm.
- Stage 2: Loosen the bolt (minimum 1 turn).
- Stage 3: Torque to 50 Nm.
- Stage 4: Angle Torque to 90°.

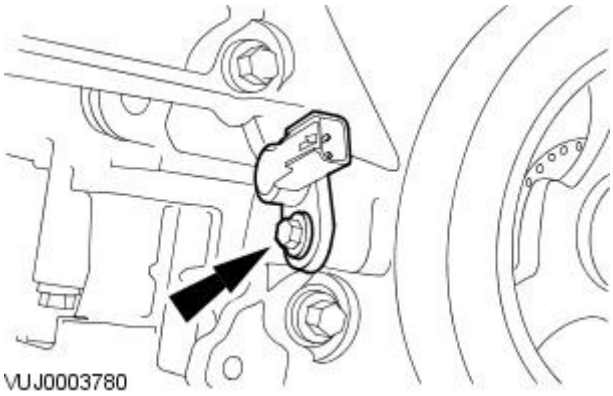

11. Install the CKP sensor.

- Tighten to 10 Nm.

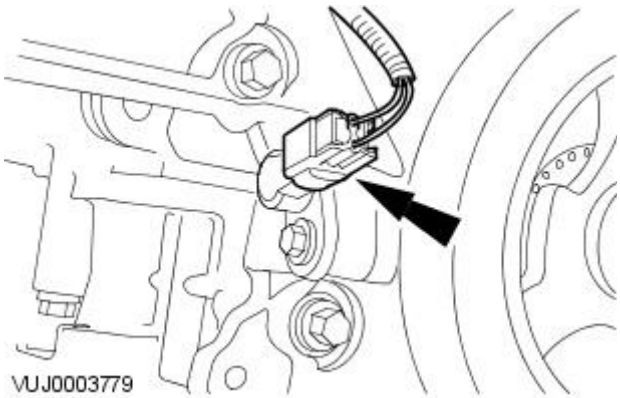

12. Connect the electrical connector.

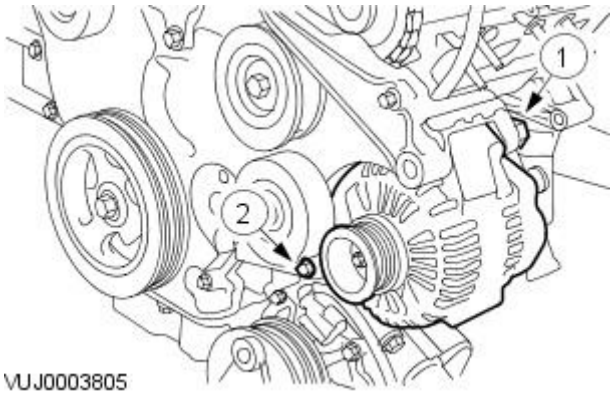

13. Install the generator retaining bolts.

- Tighten bolt 1 to 47 Nm.
- Tighten bolt 2 to 25 Nm.

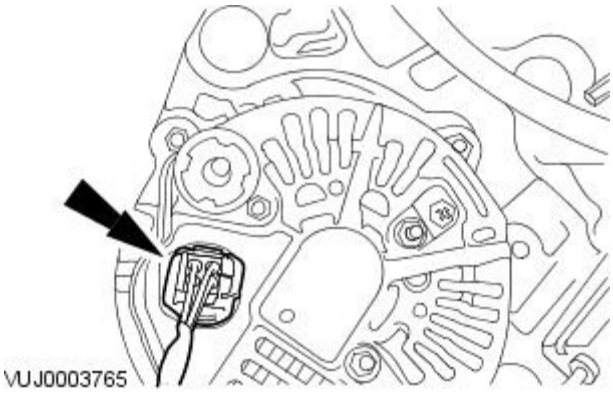

14. Connect the generator electrical connector.

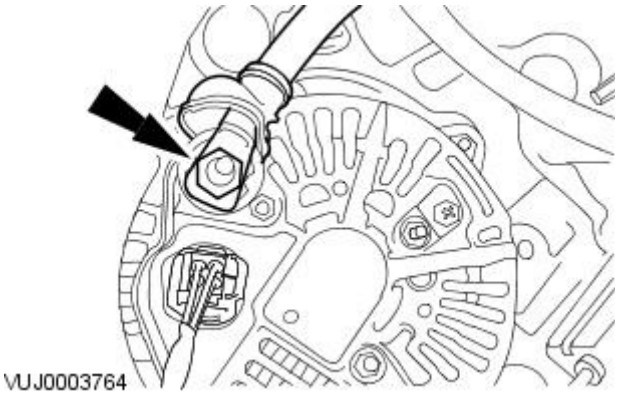

15. Connect the generator positive cable.

- Tighten to 12 Nm.

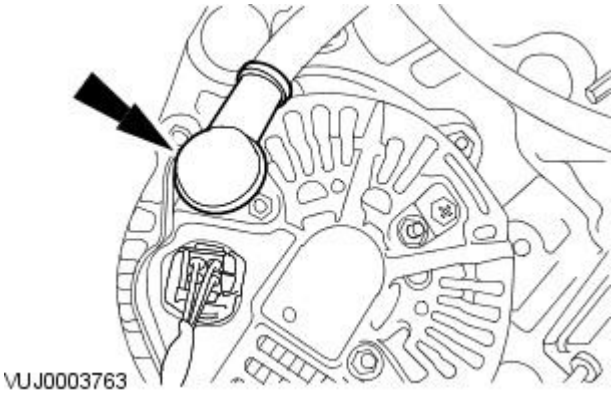

16. Attach the generator positive cable protective cover.

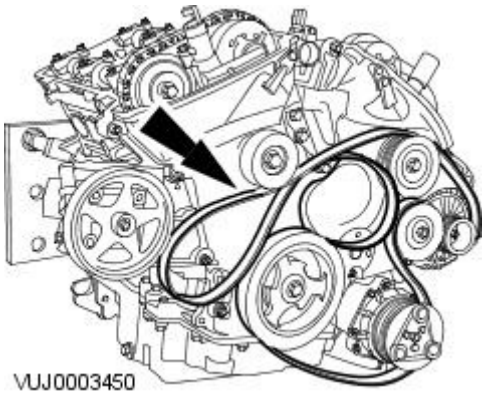

17. Attach the accessory drive belt.

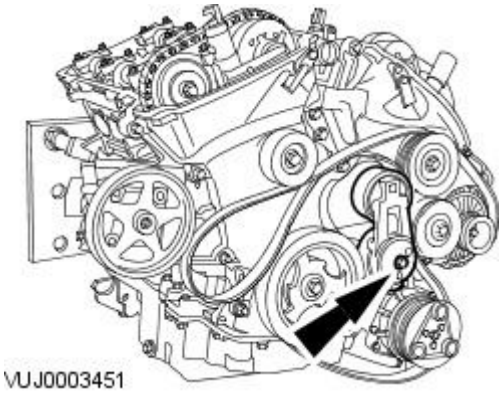

18. Install the accessory drive belt tensioner.

- Tighten to 47 Nm.

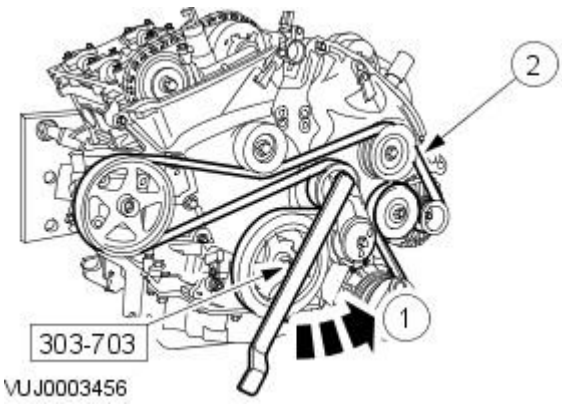

19. Attach the accessory drive belt.

1. Using the special tool, rotate the belt tensioner counter-clockwise.
2. Attach the accessory drivebelt.

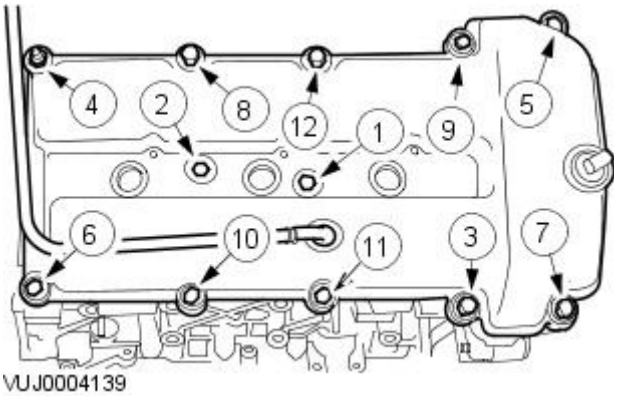

VUJ0004139

20. NOTE: Apply a 5 mm diameter bead of silicone gasket sealant WSE-M4G323-A6 or equivalent meeting Jaguar specification on the half round gaskets and apply an 8 mm diameter bead of silicone gasket sealant on the two places where the cylinder head and front timing cover join.

• NOTE: Make sure that the valve cover isolator mounts are correctly installed to the new valve cover gaskets.

Install the new valve cover gaskets.

- Complete the tightening sequence.
- Tighten to 10 Nm.

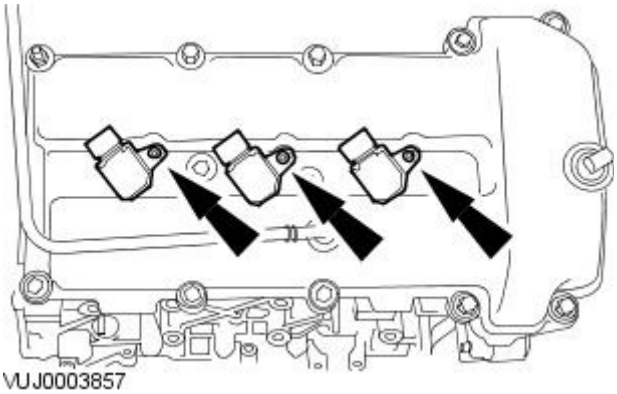
VUJ0003857

21. Install the right-hand ignition coils.

- Tighten to 6 Nm.

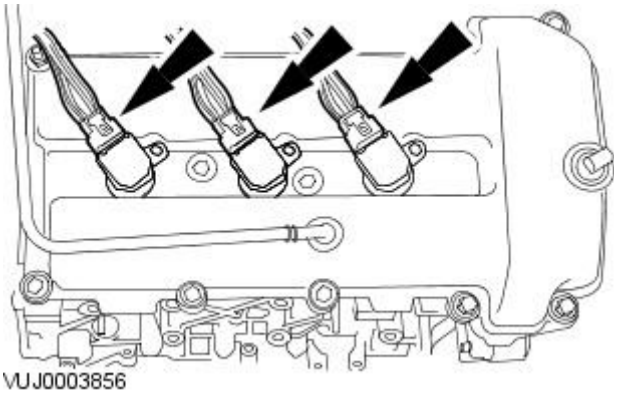
VUJ0003856

22. Connect the right-hand ignition coils electrical connectors.

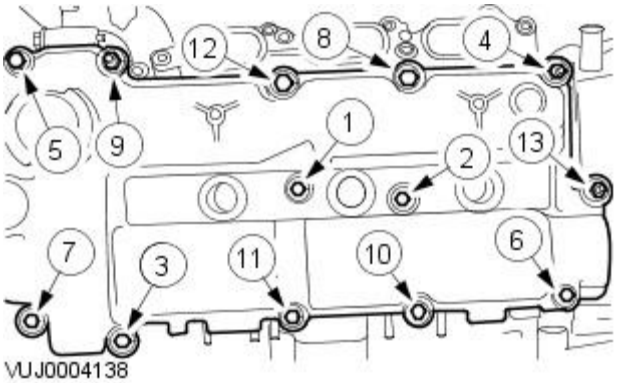

VUJ0004138

23. NOTE: Apply a 5 mm diameter bead of silicone gasket sealant WSE-M4G323-A6 or equivalent meeting Jaguar specification on the half round gaskets and apply an 8 mm diameter bead of silicone gasket sealant on the two places where the cylinder head and front timing cover join.

• NOTE: Make sure that the valve cover isolator mounts are correctly installed to the new valve cover gaskets.

Install the new valve cover gaskets.

- Complete the tightening sequence.
- Tighten to 10 Nm.

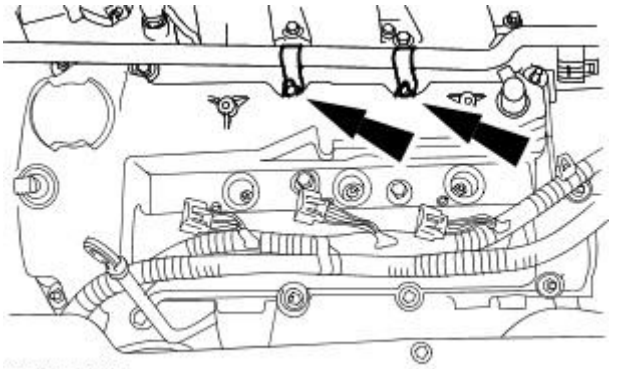
VUJ0003770

24. Install the coolant hose.

- Tighten to 6 Nm.

Vehicles with 2.0L engine

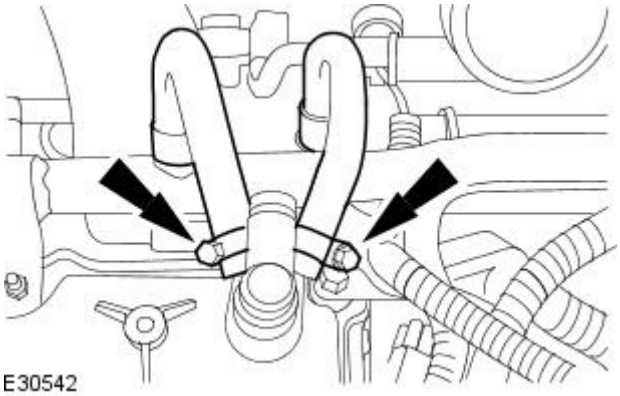

25. Install the heated positive crank case ventilation valve coolant hoses.

All vehicles

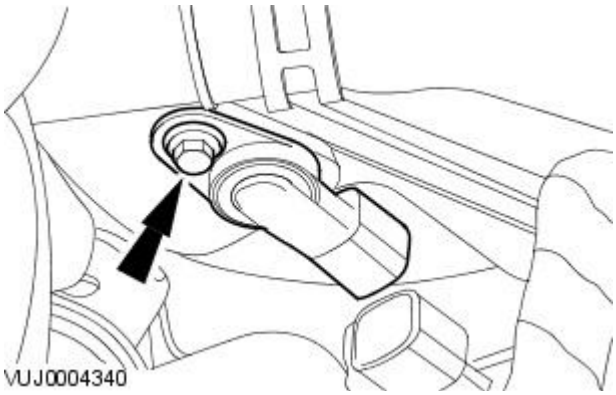

26. NOTE: Right-hand shown, left-hand similar.

Install the (CMP) semsors.

- Tighten to 7 Nm.

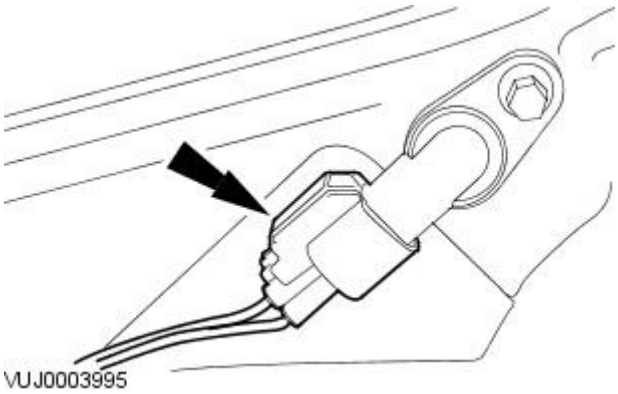

27. NOTE: Right-hand shown, left hand similar.

Connect the camshaft position sensor electrical connector.

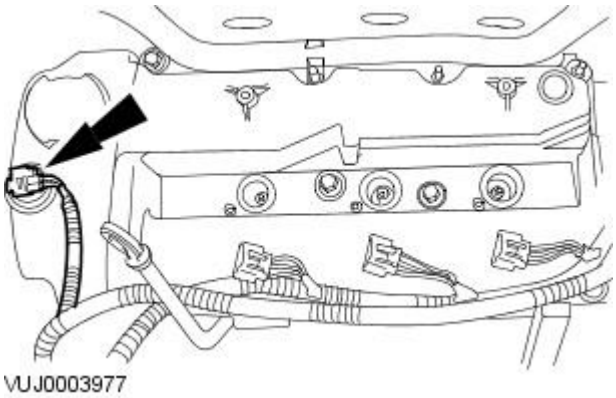

28. Connect the variable camshaft timing (VCT) solenoid electrical connector.

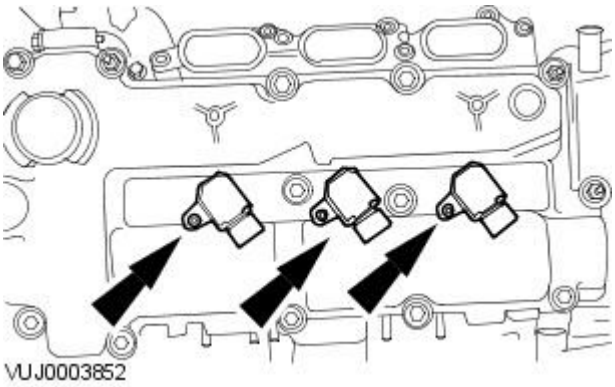

29. Install the left-hand ignition coils.

- Tighten to 6 Nm.

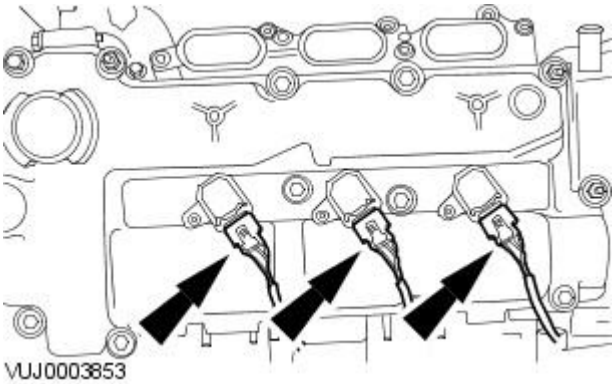

30. Connect the left-hand ignition coils electrical connectors.

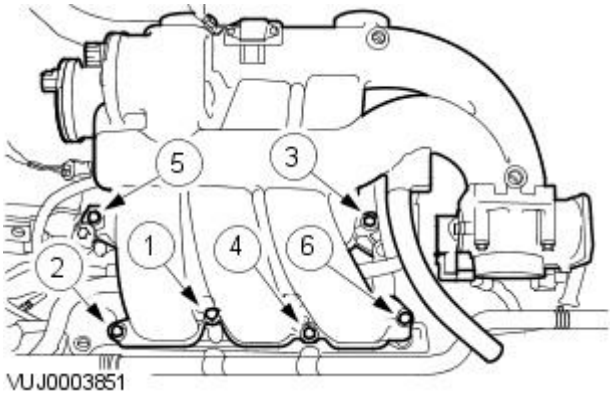

31. NOTE: 2.5L and 3.0L shown, 2.0L similar.

• NOTE: The intake manifold retaining bolts numbered 1, 2 and 3 are longer than the retaining bolts numbered 4, 5 and 6.

Install the new intake manifold gaskets.

- Complete the tightening sequence.
- Tighten to 10 Nm.

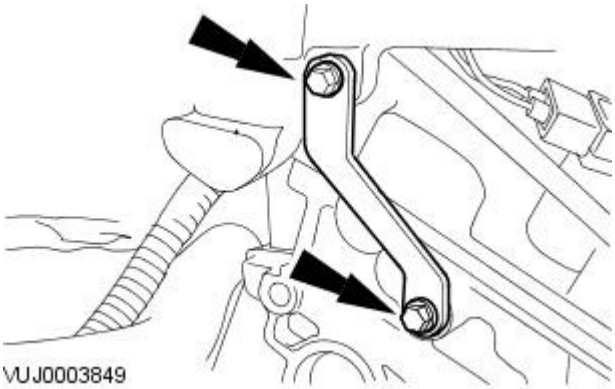

32. NOTE: 2.5L and 3.0L shown, 2.0L similar.

Install the intake manifold support bracket.

- Tighten to 10 Nm.

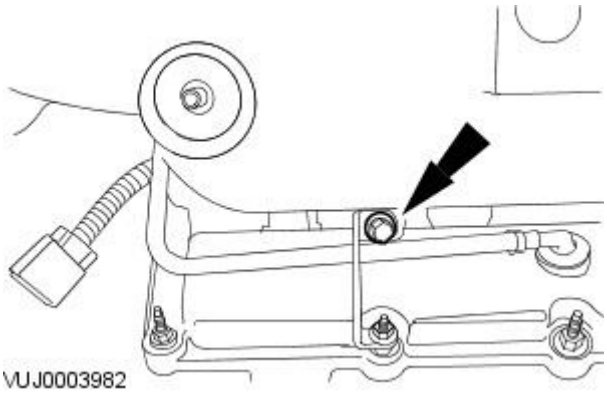

33. NOTE: 2.5L and 3.0L shown, 2.0L similar.

Install the intake manifold support bracket.

- Tighten to 10 Nm.

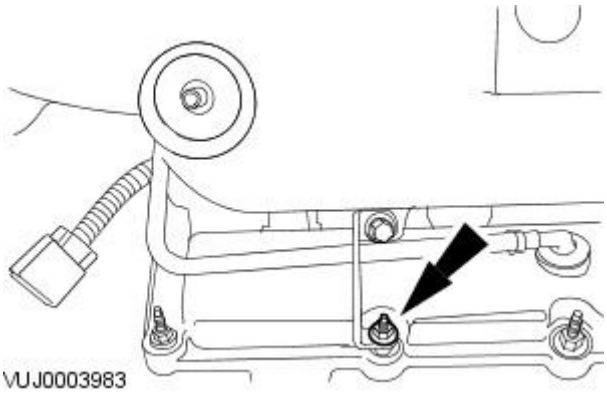

34. NOTE: 2.5L and 3.0L shown, 2.0L similar.

Tighten to 6 Nm.

Vehicles with 2.5L or 3.0L engine

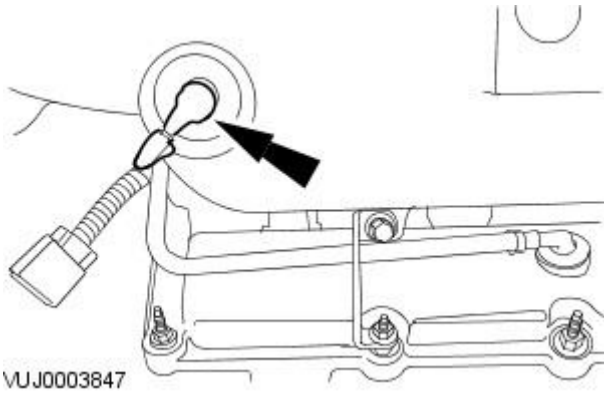

35. Connect the vacuum hose.

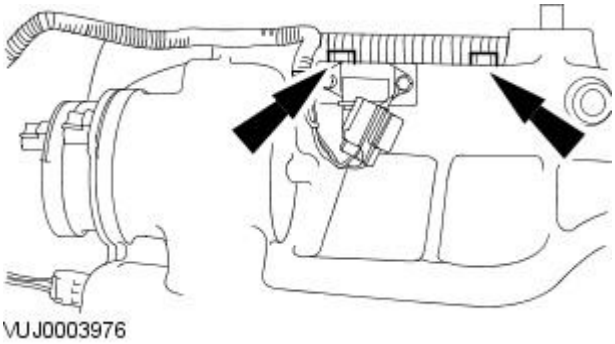

36. Attach the wiring harness.

- Tighten to 10 Nm.

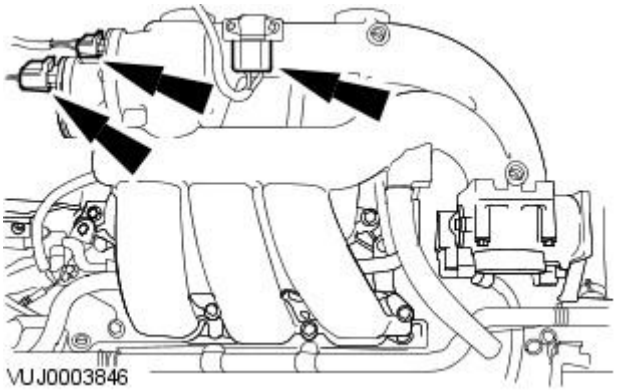

37. Connect the electrical connectors.

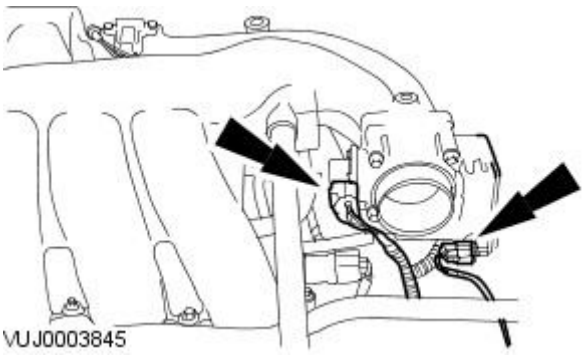

38. Connect the electrical connectors.

Vehicles with 2.0L engine

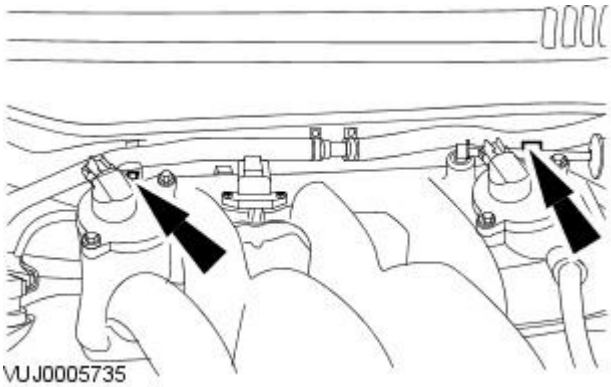

39. Attach the wiring harness.

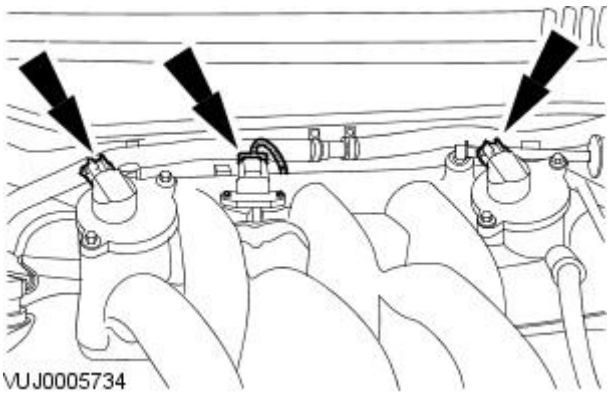

40. Connect the electrical connectors.

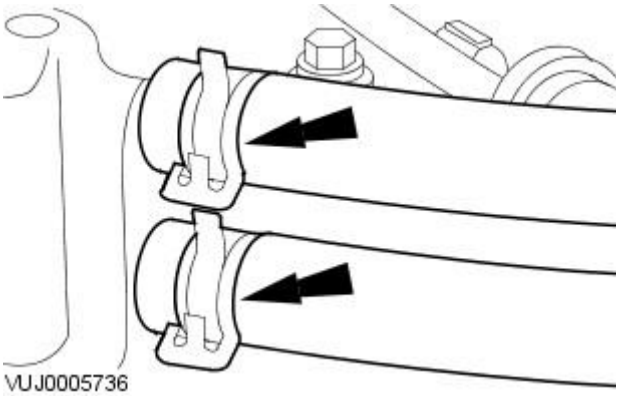

41. Install the coolant hoses.

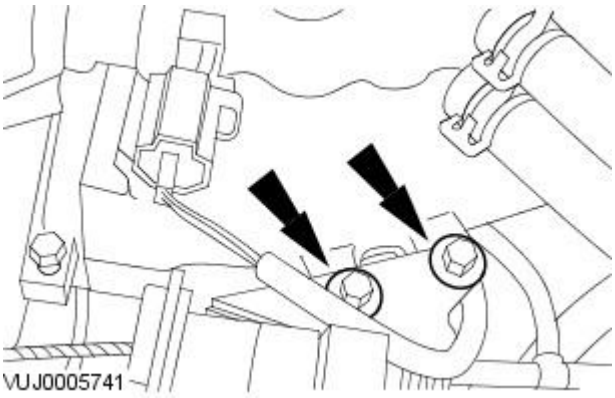

42. Attach the throttle cable bracket.

- Tighten to 9 Nm.

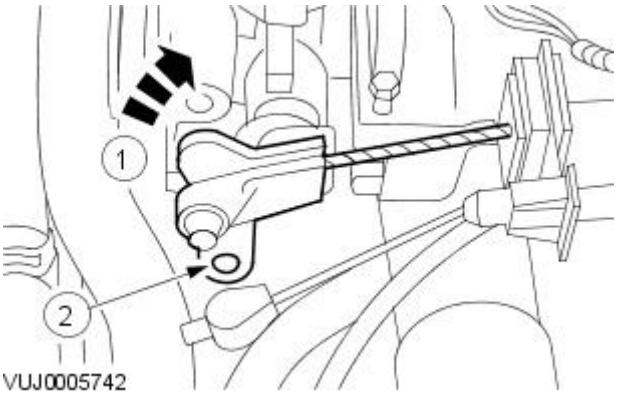

43. Attach the throttle cable.

1. Reposition the throttle lever to the fully open position.
2. Attach the throttle cable.

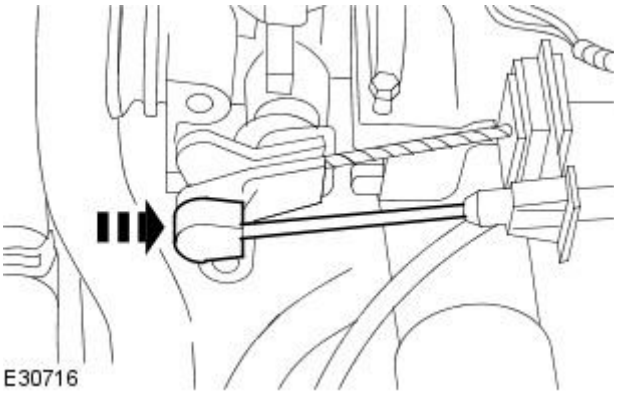

44. Attach the cruise control cable.

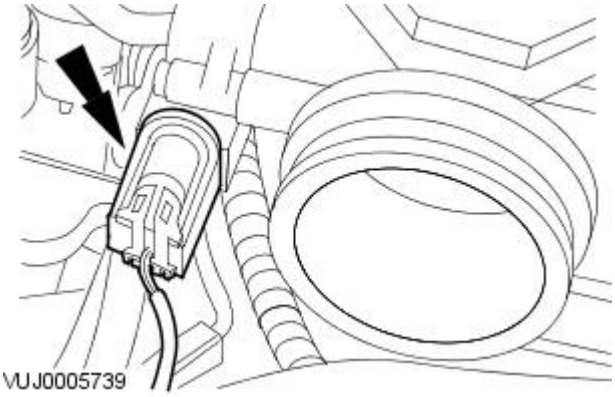

45. Connect the throttle position sensor electrical connector.

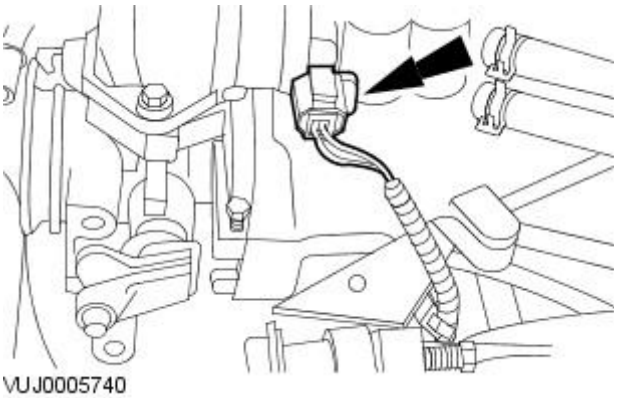

46. Connect the idle actuator control valve electrical connector.

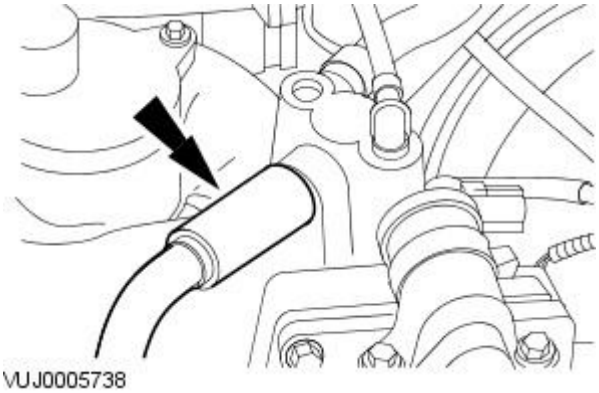

47. Attach the positive crank case venilation hose.

Vehicles with 2.5L or 3.0L engine

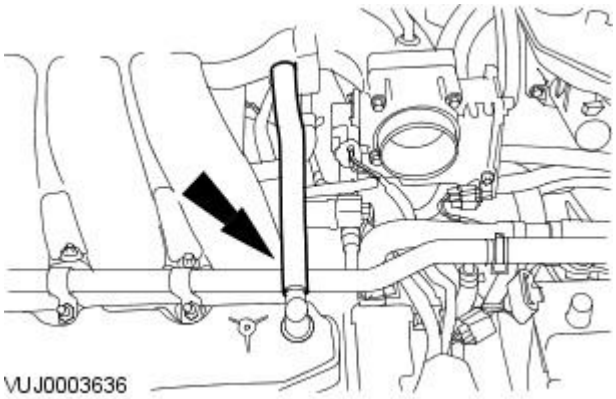

48. Attach the positive crank case ventilation hose.

All vehicles

49. Install the automatic or manual transmission. For additional information, refer to Section 307-01A Automatic Transmission/TransaxleSection 307-01B Automatic Transmission/Transaxle or Section 308-03 Manual Transmission/Transaxle.

50. NOTE: Use oil WSE-M2C908-A or equivalent meeting Jaguar specification.

Refill the engine with oil.

Published: 11-May-2011

Engine - 2.0L NA V6 - AJV6 / 2.5L NA V6 - AJV6 / 3.0L NA V6 - AJ27 - Engine Front Mount

In-vehicle Repair

Special Tool(s)	
	Powertrain Assembly Jack HTJ1200-02

Removal

1. Drain the cooling system. For additional information, refer to .
   For additional information, refer to: Cooling System Draining, Filling and Bleeding (303-03A Engine Cooling - 2.0L NA V6 - AJV6/2.5L NA V6 - AJV6/3.0L NA V6 - AJ27, General Procedures).
2. Install the special tool.

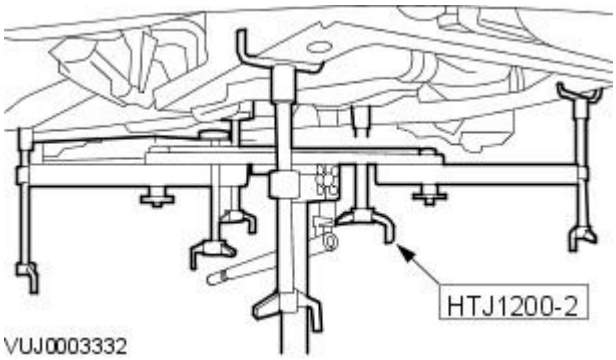

3. NOTE: Left-hand shown, right-hand similar.

   Position and adjust the special tool rear height adjuster.

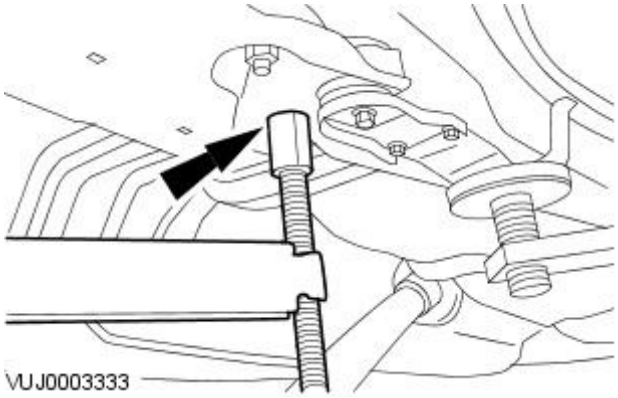

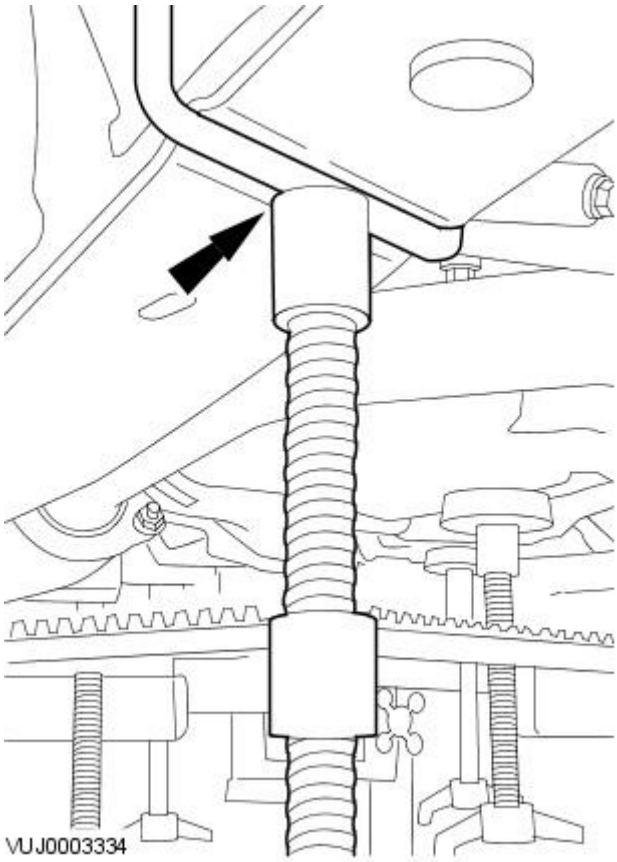

4. NOTE: Right-hand shown, left-hand similar.

Position and adjust the special tool front height adjuster.

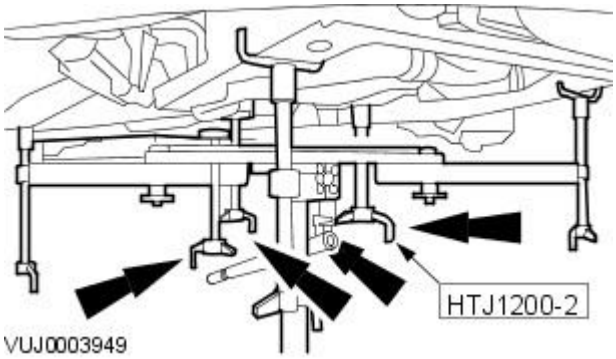

5. Position and adjust the special tool engine height adjusters.

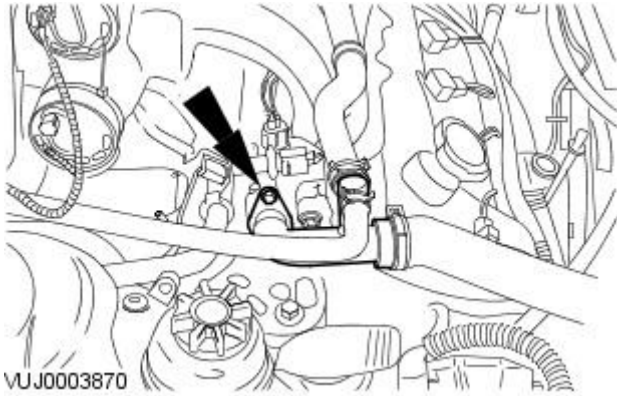

6. Detach the coolant pipe.

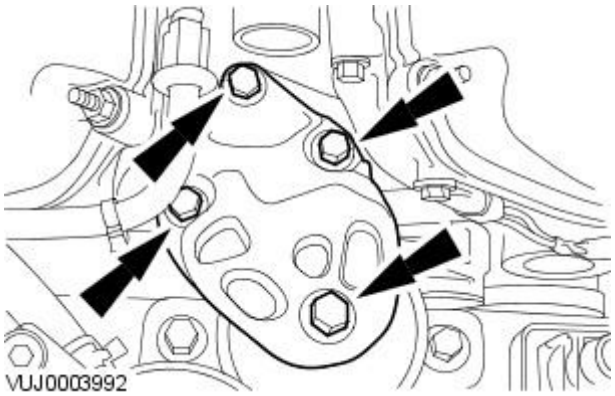

7. Remove the engine support bracket.

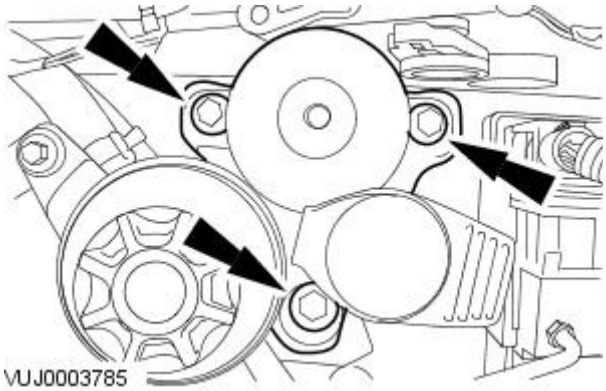

8. Remove the engine mount.

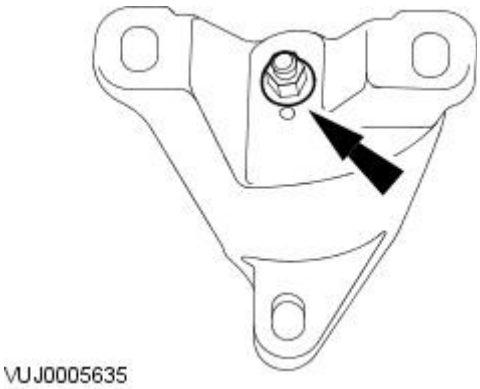

9. Remove the hydromount.

Installation

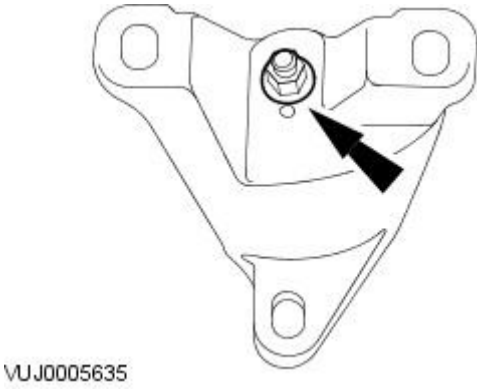

1. To install, reverse the removal procedure.

- Tighten to 83 Nm.

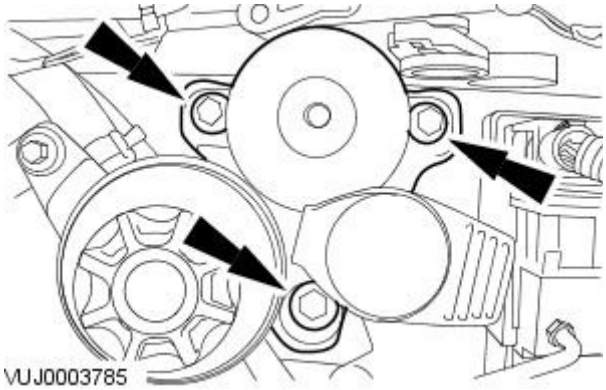

2. Tighten to 80 Nm.

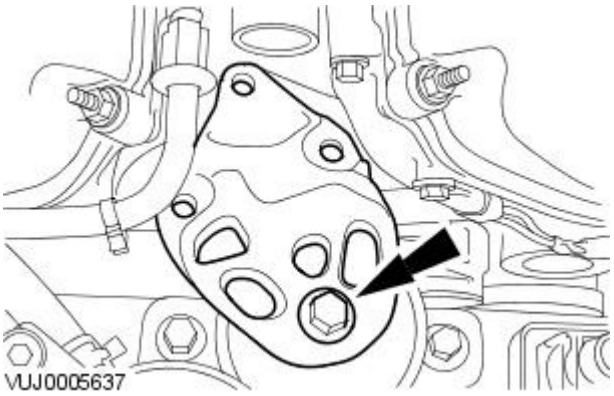

3. Tighten to 80 Nm.

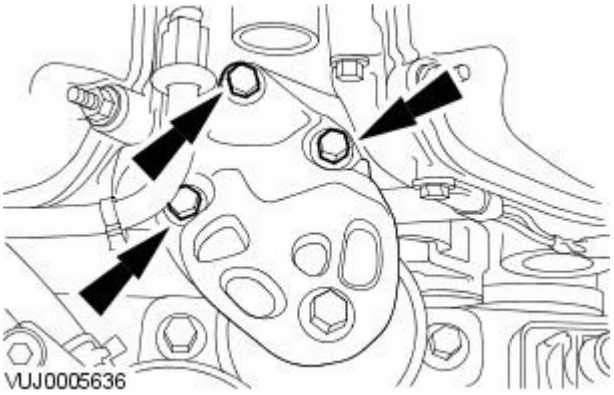

4. Tighten fixings to 40 Nm or 48 Nm as outlined below.

• NOTE:

- If reusing existing fixings, on vehicles built prior to VIN J24252, tighten to 48 Nm.
- If new fixings are used on any vehicle tighten to 40 Nm.

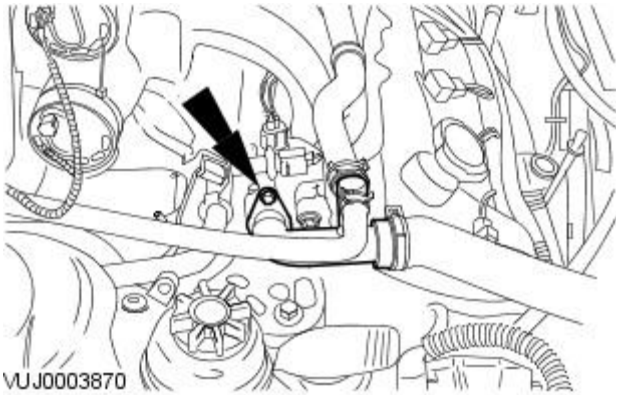

5. Tighten to 9 Nm.

6. Fill and bleed the cooling system.
For additional information, refer to: Cooling System Draining, Filling and Bleeding (303-03A Engine Cooling - 2.0L NA V6 - AJV6/2.5L NA V6 - AJV6/3.0L NA V6 - AJ27, General Procedures).

Engine - 2.0L NA V6 - AJV6 / 2.5L NA V6 - AJV6 / 3.0L NA V6 - AJ27 - Exhaust Manifold LH

In-vehicle Repair

Removal

1. Drain the cooling system. For additional information, refer to Section 303-03A Engine CoolingSection 303-03B Engine Cooling.
2. Remove the cooling fan motor and shroud. For additional information, refer to Section 303-03A Engine CoolingSection 303-03B Engine Cooling.
3. Lower the vehicle.
4. Remove the air filter intake pipe.

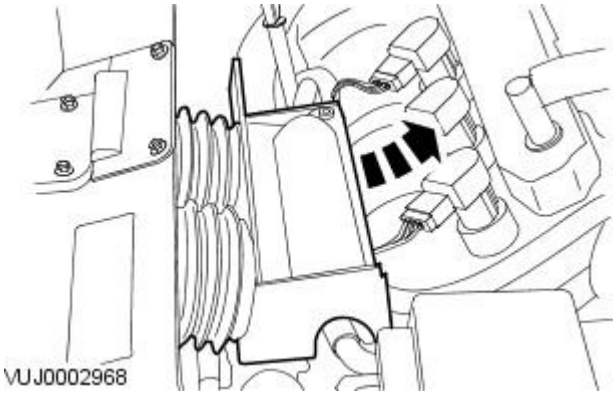

5. Detach the generator wiring harness.

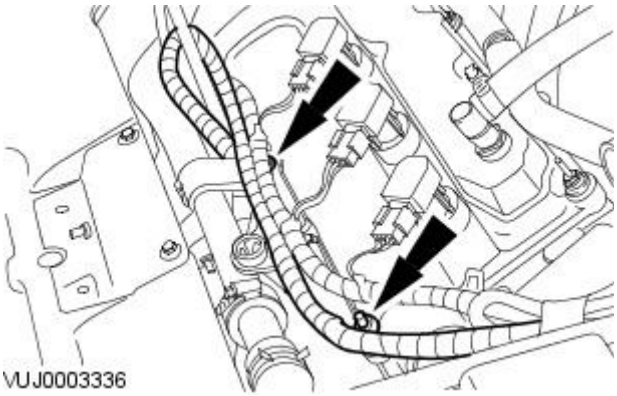

6. Remove the air filter retaining bracket.

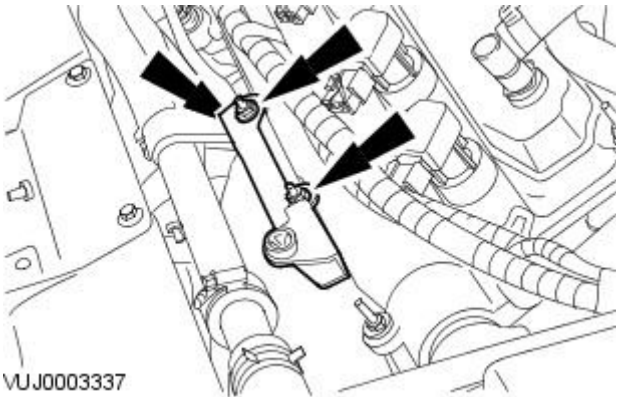

7. Detach the coolant pipe.

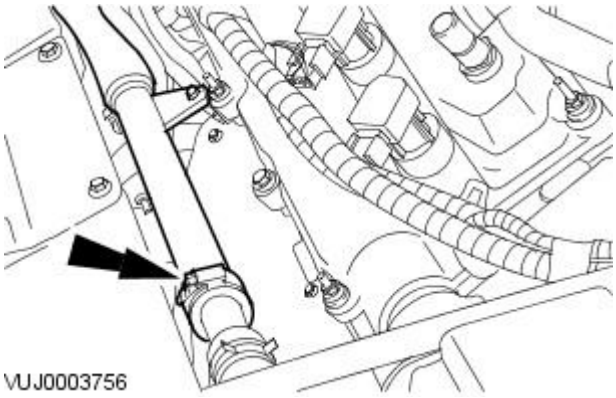

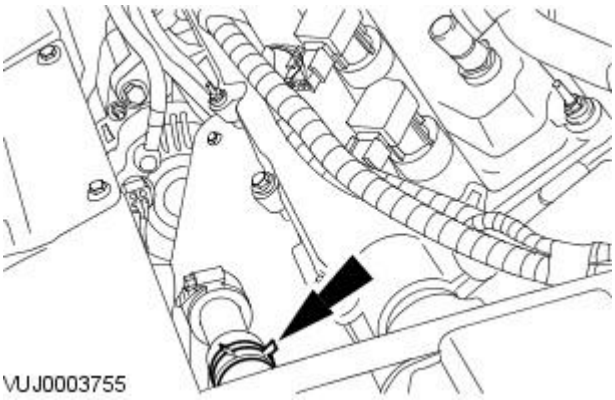

8. Detach the coolant hose.

9. Raise the vehicle.

10. Remove the coolant hose.

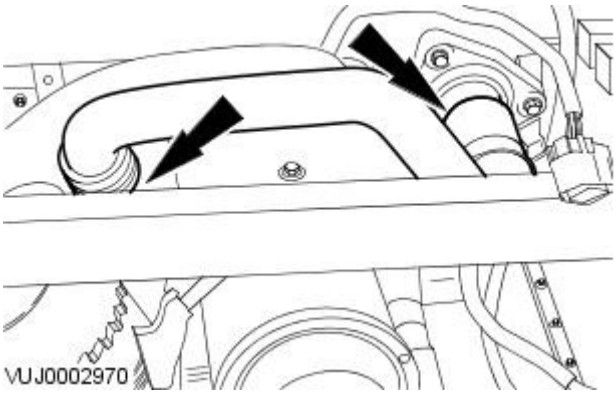

11. Disconnect the heated oxygen sensor (HO2S) electrical connector.

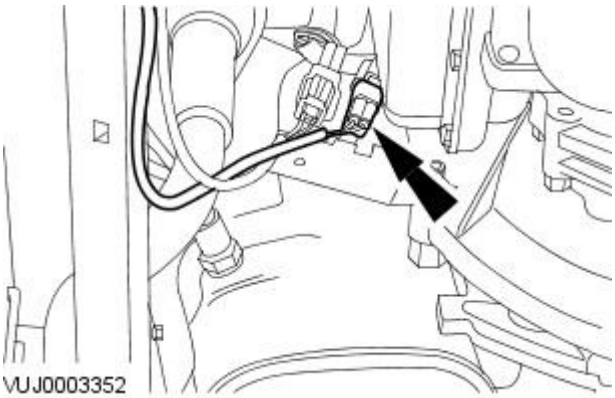

12. Remove the exhaust manifold heat shield retaining bolt.

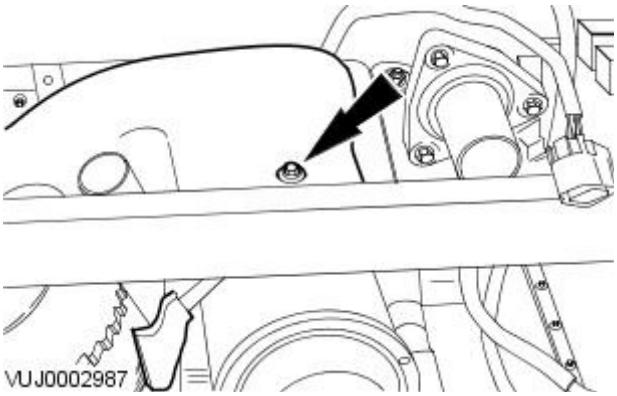

13. Lower the vehicle.

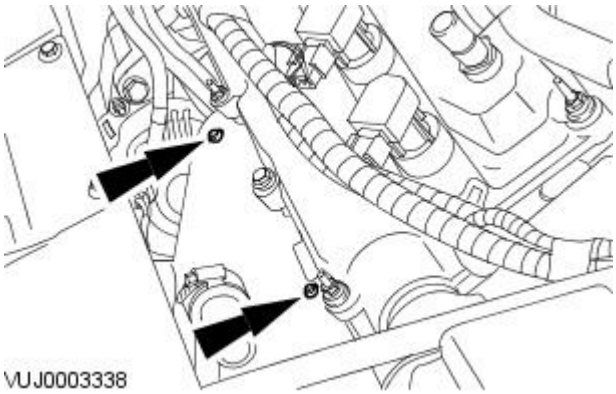

14. Remove the exhaust manifold heat shield.

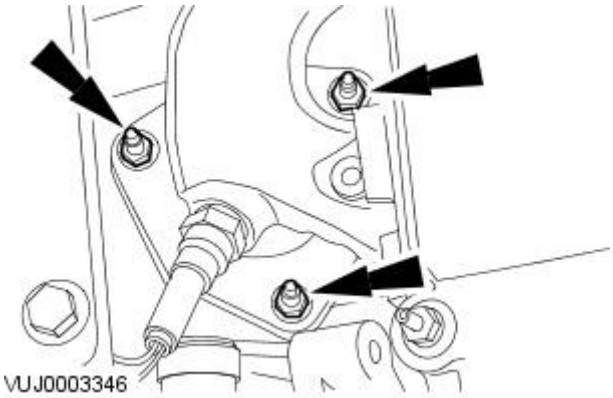

15. Detach the catalytic converter.

- Discard the retaining nuts.
- Remove and discard the retaining studs.

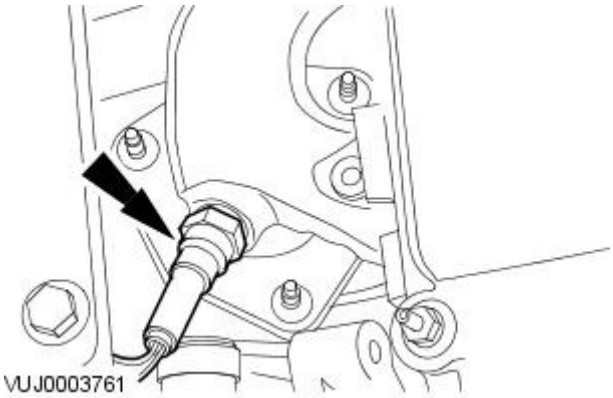

16. Using a suitable tool remove the HO2S.

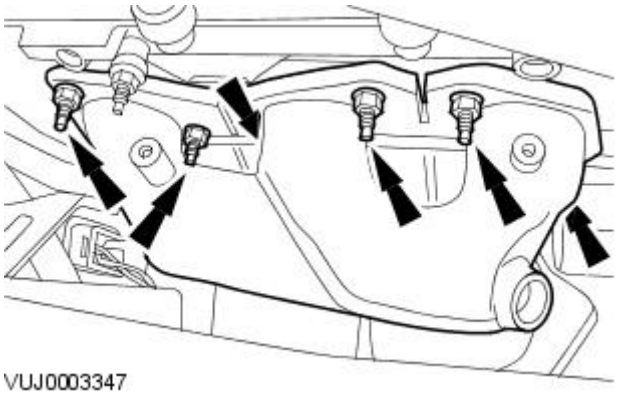

17. Remove the exhaust manifold.

- Remove and discard the exhaust manifold gasket.

Installation

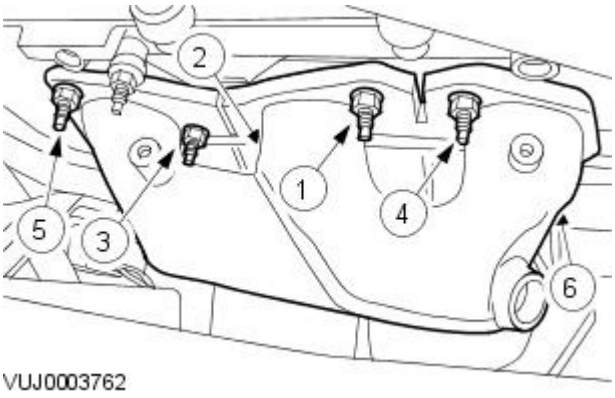

1. Install the exhaust manifold.

- Install the new exhaust manifold gasket.
- Complete the tightening sequence.
- Tighten to 20 Nm.

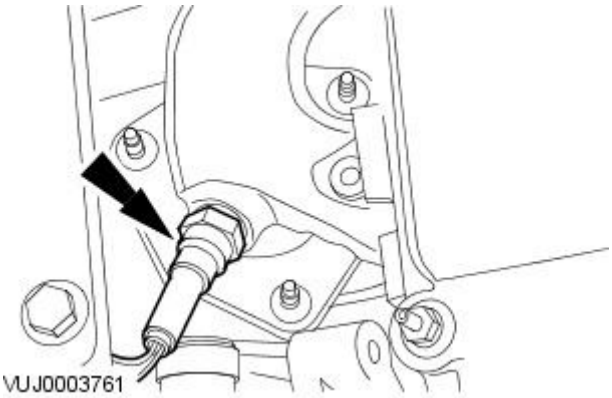

2. Install the H02S.

- Tighten to 40 Nm.

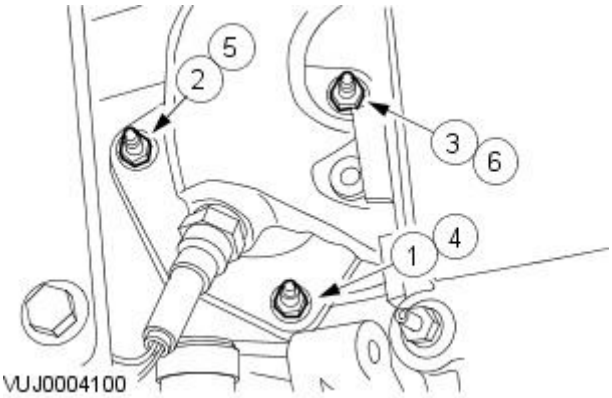

3. NOTE: Make sure that the retaining nuts are tightened twice in the sequence shown.

Attach the catalytic converter.

- Install new retaining nuts and studs.
- Tighten to 9 Nm.
- Tighten in the sequence shown to 25 Nm.

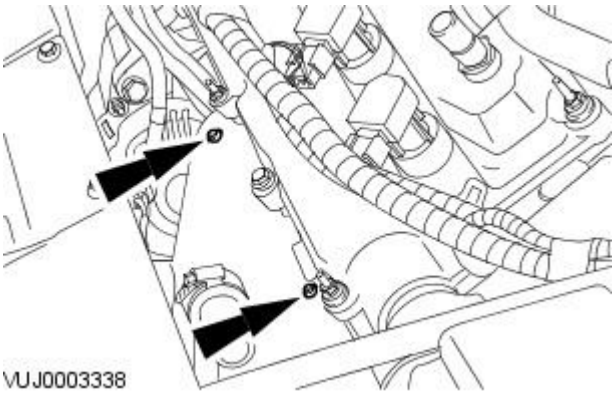

4. Install the exhaust manifold heat shield.

- Tighten to 11 Nm.

5. Raise the vehicle.

6. Tighten to 11 Nm.

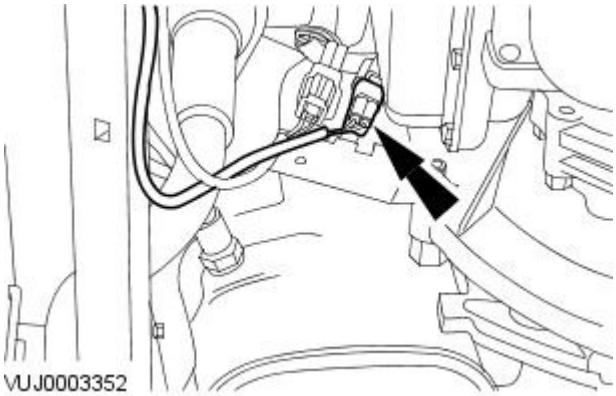

7. Connect the heated oxygen sensor (HO2S) electrical connector.

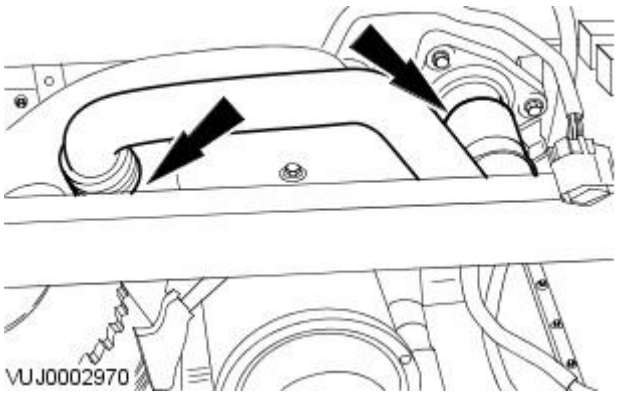

8. Install the coolant hose.

9. Lower the vehicle.

10. Attach the coolant hose.

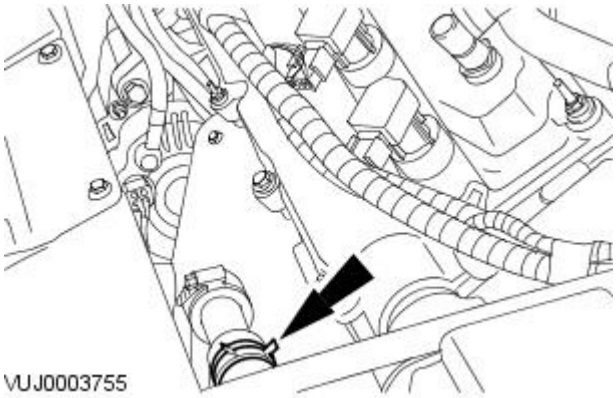

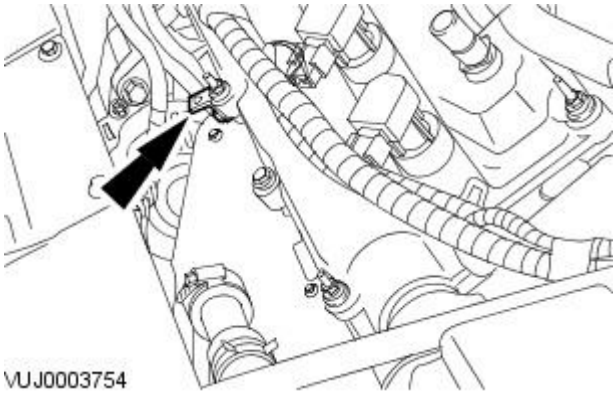

11. Install the coolant pipe retaining bracket.

- Tighten to 10 Nm.

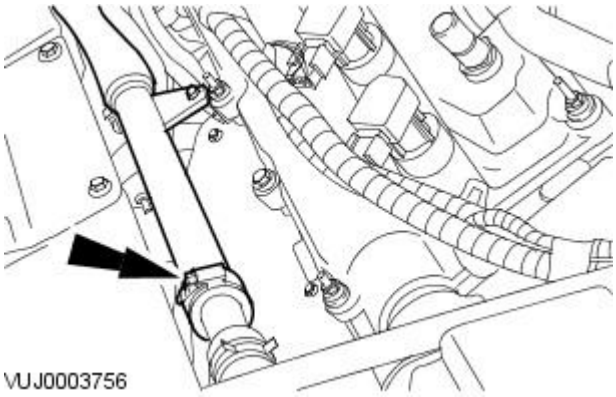

12. Attach the coolant pipe.

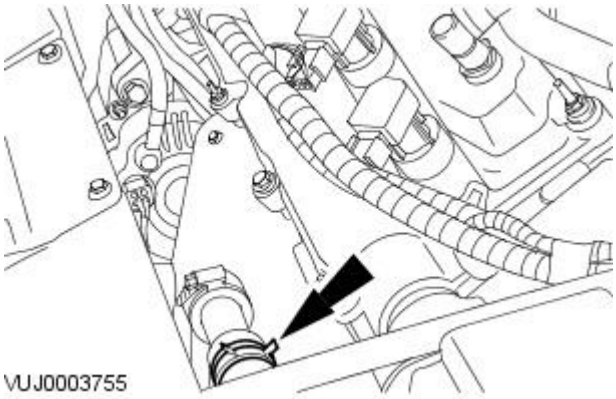

13. Attach the coolant hose.

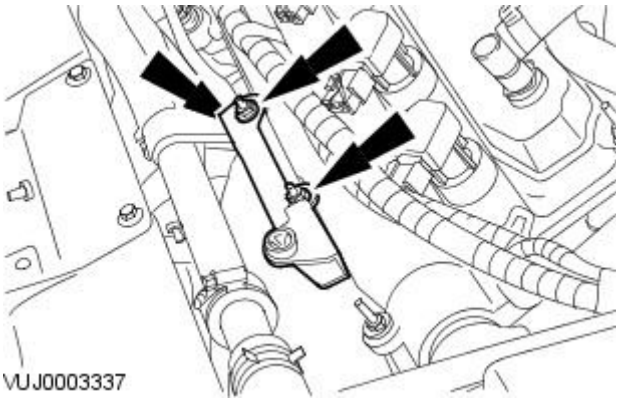

14. Install the air filter retaining bracket.

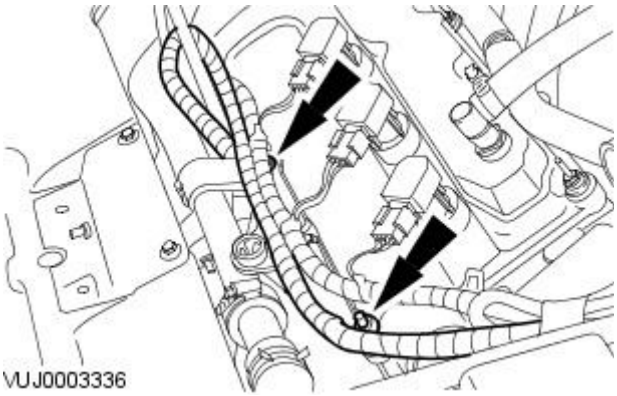

15. Attach the generator wiring harness.

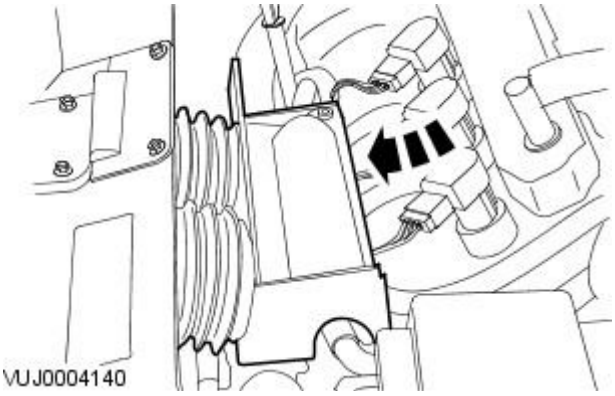

16. Install the air filter intake pipe.

17. Install the cooling fan motor and shroud. For additional information, refer to Section 303-03A Engine CoolingSection 303-03B Engine Cooling.
18. Fill and bleed the cooling system. For additional information, refer to Section 303-03A Engine CoolingSection 303-03B Engine Cooling.

Engine - 2.0L NA V6 - AJV6 / 2.5L NA V6 - AJV6 / 3.0L NA V6 - AJ27 - Flexplate

In-vehicle Repair

Removal

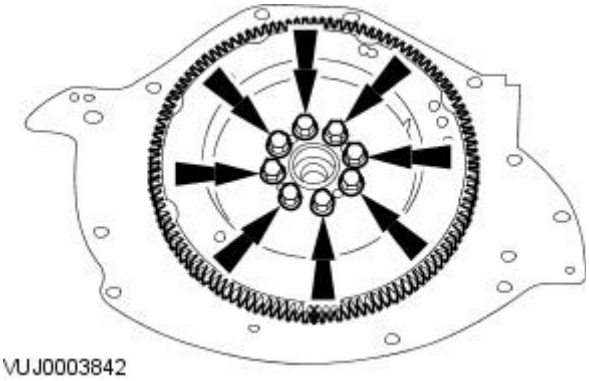

1. Remove the automatic transmission. For additional information, refer toSection 307-01A Automatic Transmission/TransaxleSection 307-01B Automatic Transmission/Transaxle.
2. NOTE: Prevent the flexplate from rotating.

   Remove the flexplate.

Installation

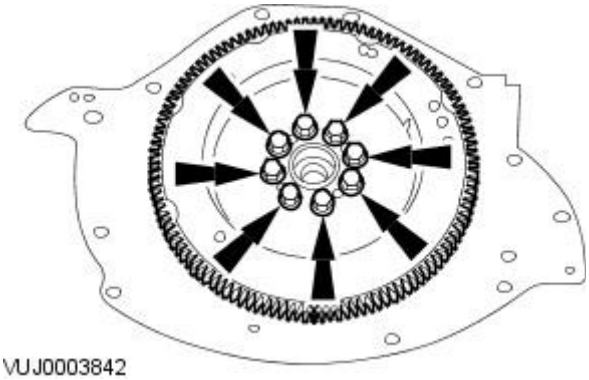

1. NOTE: Make sure the crankshaft and flexplate mating faces are clean before installation.

   • NOTE: The flexplate will only locate in one position.

   • NOTE: Tighten the retaining bolts working diagonally.

   Install the flexplate.

   - Prevent the flexplate from rotating.
   - Tighten to 80 Nm.

2. Install the automatic transmission. For additional information, refer toSection 307-01A Automatic Transmission/TransaxleSection 307-01B Automatic Transmission/Transaxle.

Engine - 2.0L NA V6 - AJV6 / 2.5L NA V6 - AJV6 / 3.0L NA V6 - AJ27 - Exhaust Manifold RH

In-vehicle Repair

Removal

1. Remove the three way catalytic converter (TWC). For additional information, refer to Section 309-00 Exhaust System.
2. Disconnect the heated oxygen sensor (HO2S) electrical connector.

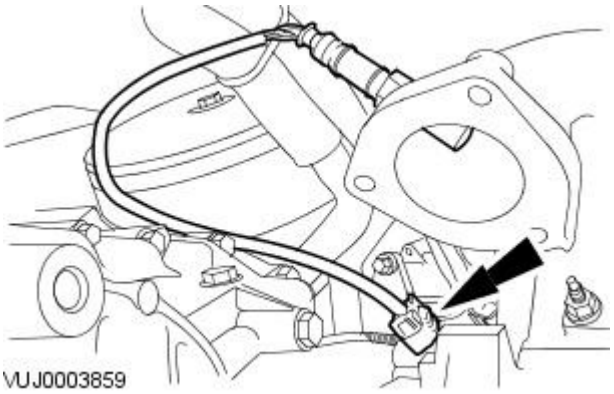

3. Using a suitable tool remove the HO2S.

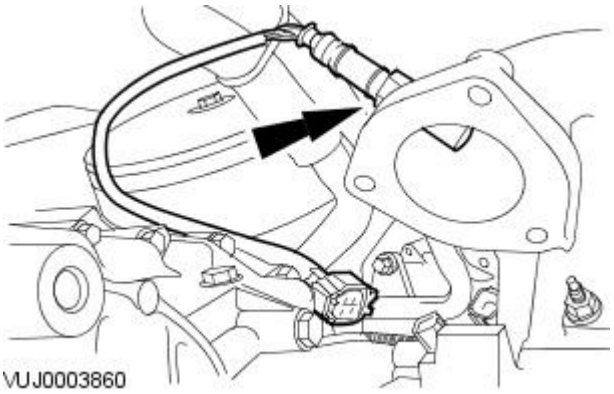

4. Remove the exhaust manifold.
   - Remove and discard the exhaust manifold gasket.

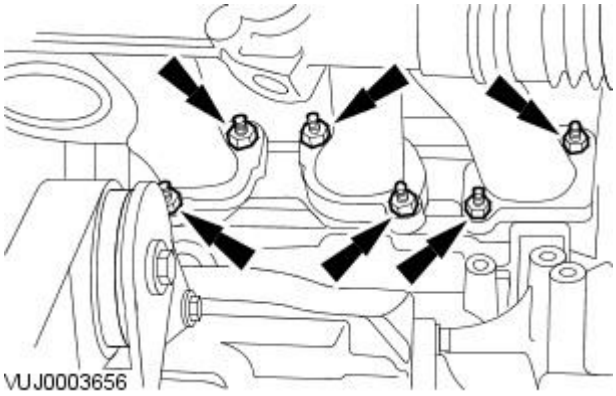

Installation

1. Install the exhaust manifold.
   - Install the new exhaust manifold gasket.
   - Complete the tightening sequence.
   - Tighten to 20 Nm.

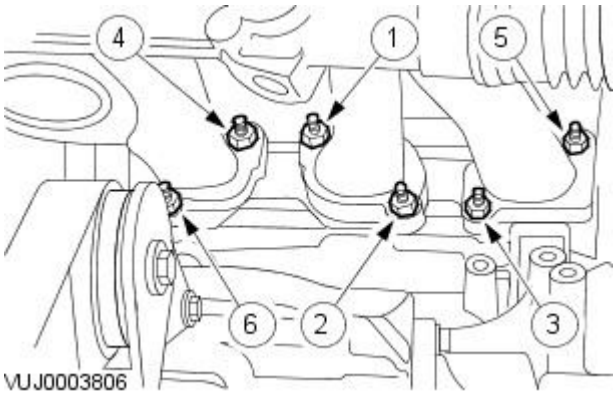

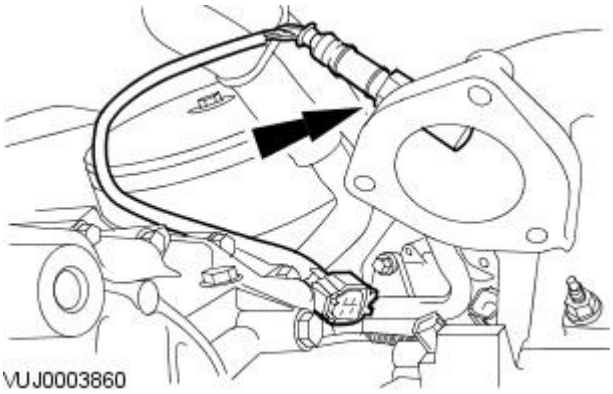

2. Tighten to 40 Nm.

3. Install the three way catalytic converter (TWC). For additional information, refer to Section 309-00 Exhaust System.

Engine - 2.0L NA V6 - AJV6 / 2.5L NA V6 - AJV6 / 3.0L NA V6 - AJ27 - Flywheel

In-vehicle Repair

Removal

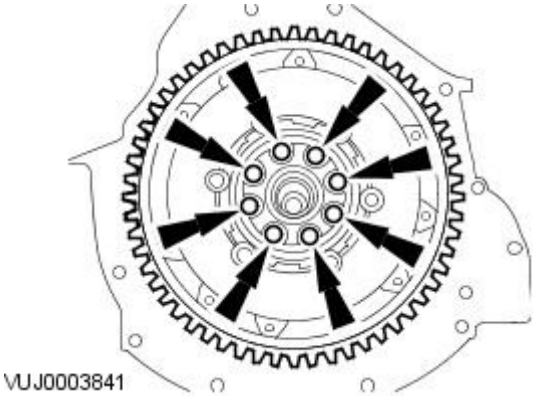

1. Remove the clutch disc and pressure plate. For additional information, refer to Section 308-01 Clutch.
2. NOTE: Prevent the flywheel from rotating.

   Remove the flywheel.

Installation

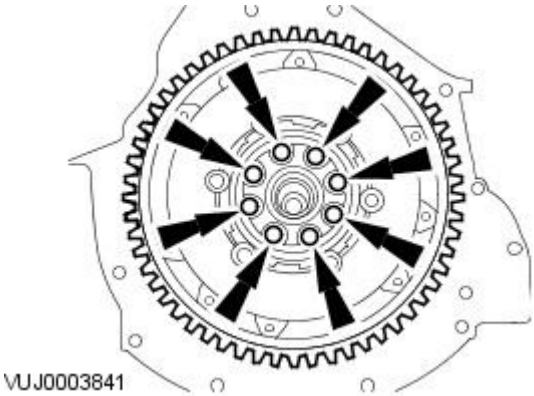

1. NOTE: Make sure the crankshaft and flywheel mating faces are clean before installation.

   • NOTE: The flywheel will only locate in one position.

   • NOTE: Tighten the retaining bolts working diagonally.

   Install the flywheel.

   - Prevent the flywheel from rotating.
   - Tighten to 80 Nm.

2. Install the clutch disc and pressure plate. For additional information, refer to Section 308-01 Clutch.

Engine - 2.0L NA V6 - AJV6 / 2.5L NA V6 - AJV6 / 3.0L NA V6 - AJ27 - Intake Manifold

In-vehicle Repair

Removal

All vehicles

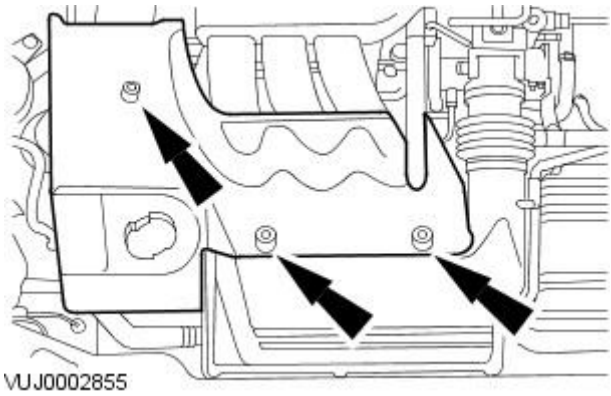

1. Remove the engine cover (if equipped).

2. Remove the air filter outlet pipe.
For additional information, refer to: Air Cleaner Outlet Pipe (303-12A Intake Air Distribution and Filtering - 2.0L NA V6 - AJV6/2.5L NA V6 - AJV6/3.0L NA V6 - AJ27, Removal and Installation).

Vehicles with 2.5L or 3.0L engine

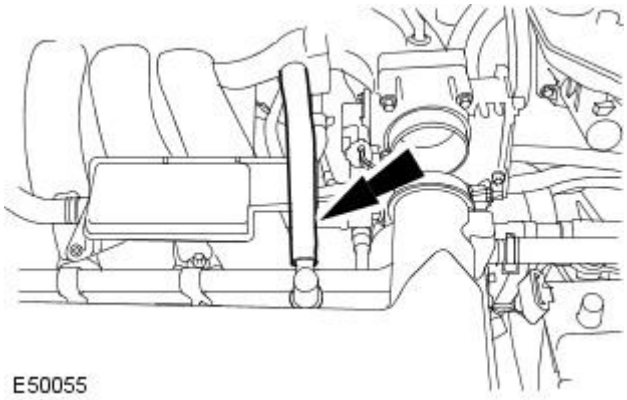

3. Remove the positive crankcase ventilation hose.

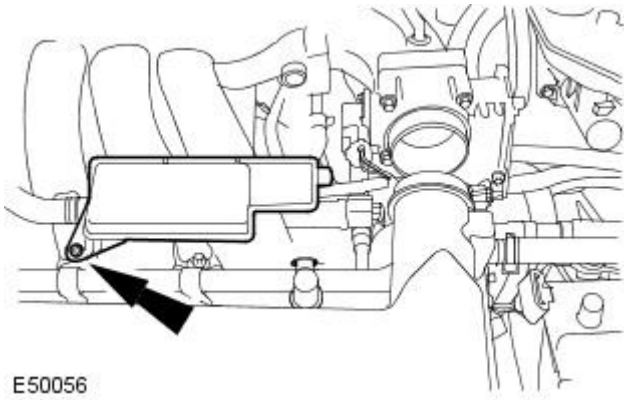

4. Remove the air cleaner resonator.

Vehicles with 2.0L engine

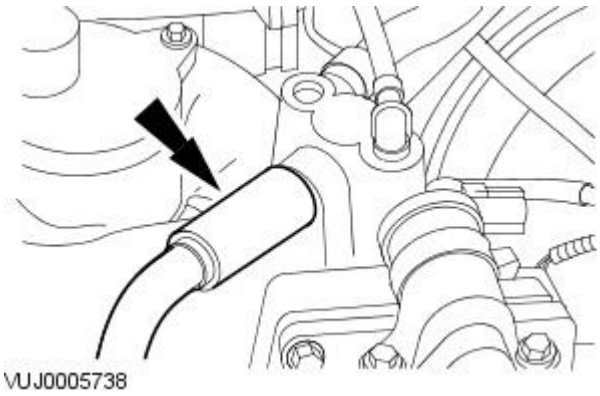

5. Detach the positive crank case ventilation hose.

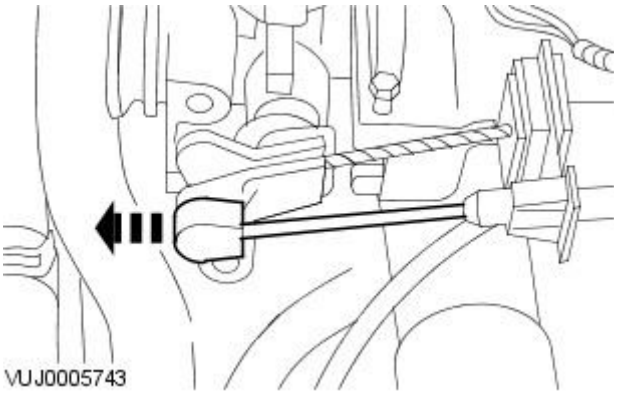

6. Detach the cruise control cable.

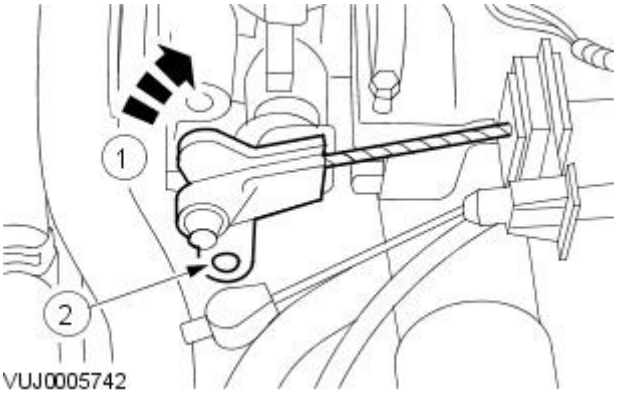

7. Detach the throttle cable.

1. Reposition the throttle lever to the fully open position.
2. Detach the throttle cable.

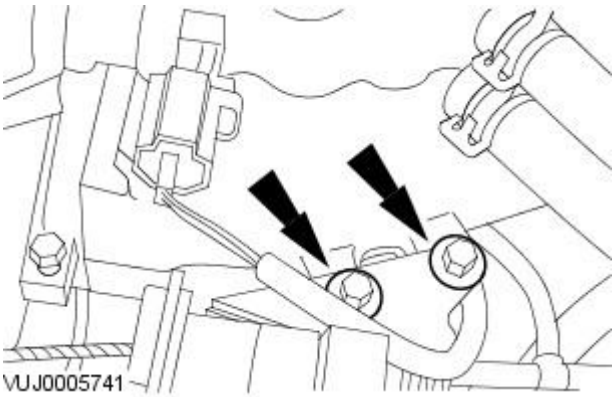

8. Detach the throttle cable retaining bracket.

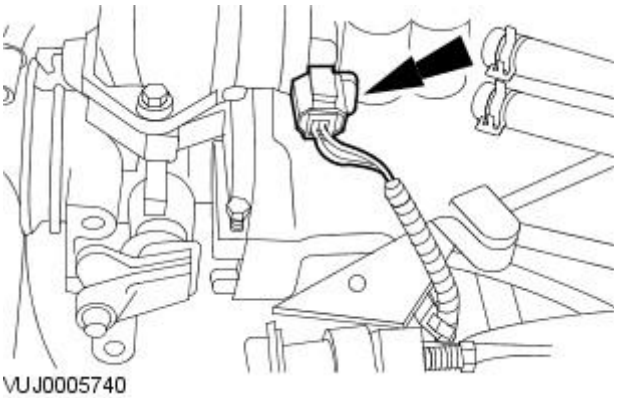

9. Disconnect the throttle body electrical connector.

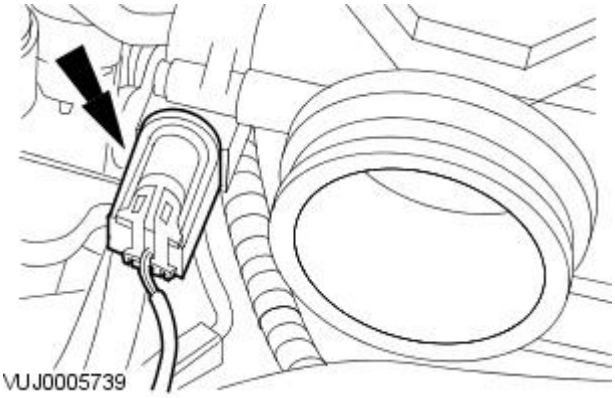

10. Disconnect the throttle body electrical connector.

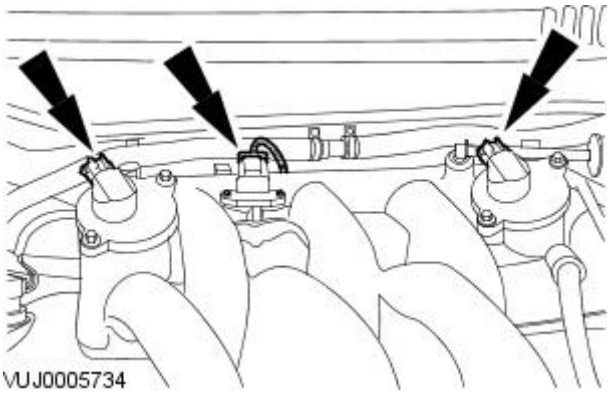

11. Disconnect the electrical connectors.

Vehicles with 2.5L or 3.0L engine

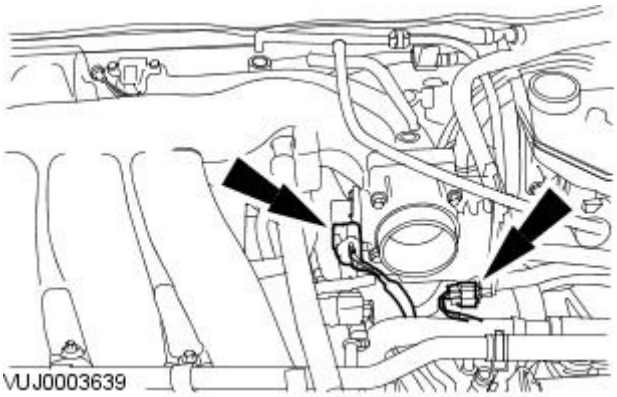

12. Disconnect the throttle body electrical connectors.

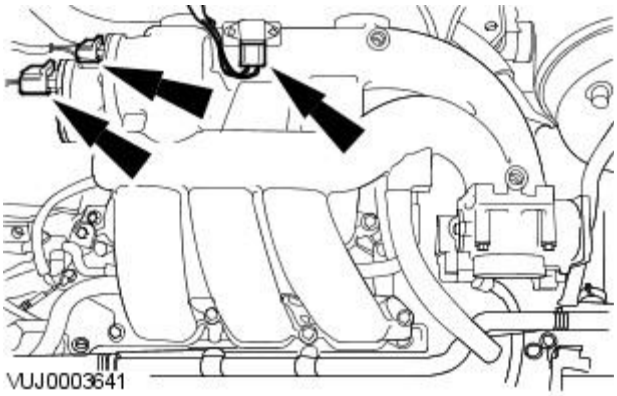

13. Disconnect the electrical connectors.

All vehicles

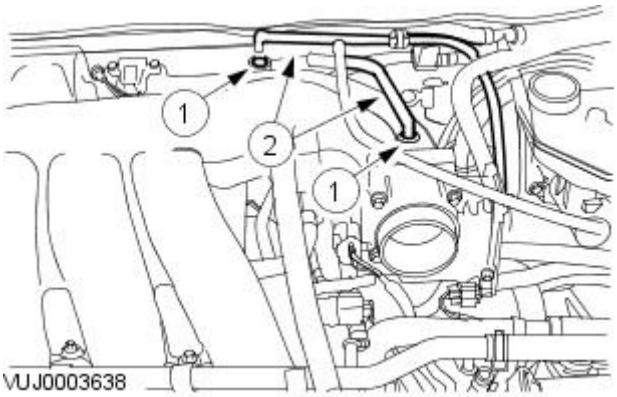

14. NOTE: 2.5L and 3.0L shown, 2.0L similar.

Detach the vacuum hoses.

1. Press the retaining ring.
2. Detach the vacuum hose.

Vehicles with 2.0L engine

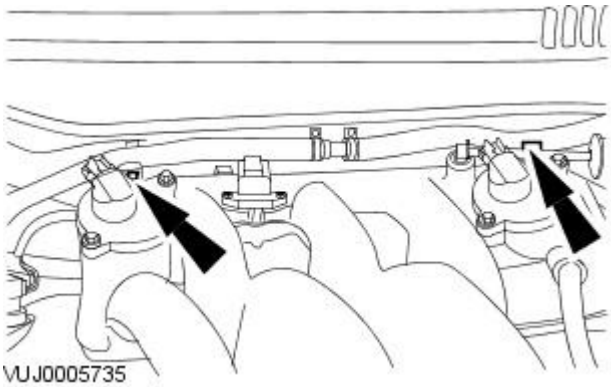

15. Detach the coolant hose from the retaining clips.

Vehicles with 2.5L or 3.0L engine

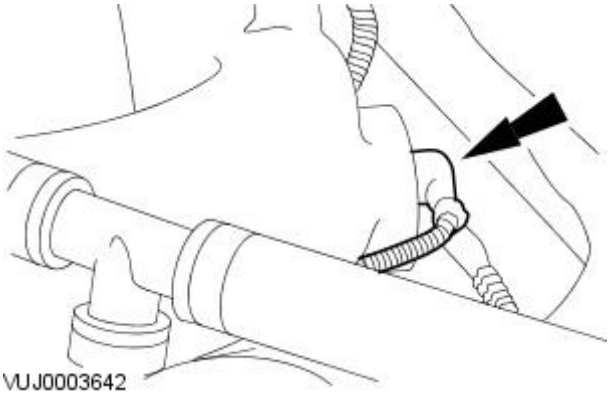

16. Disconnect the vacuum hose.

All vehicles

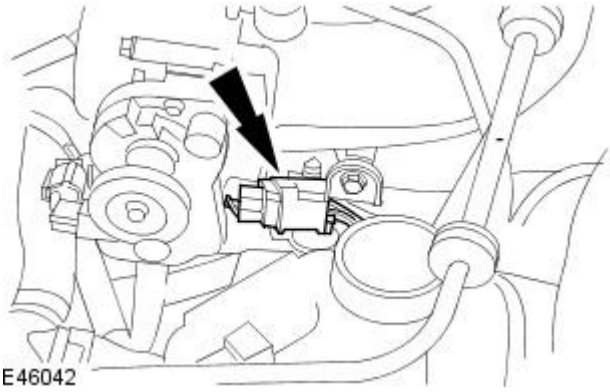

17. Detach the injector harness electrical connector from the intake manifold support bracket.

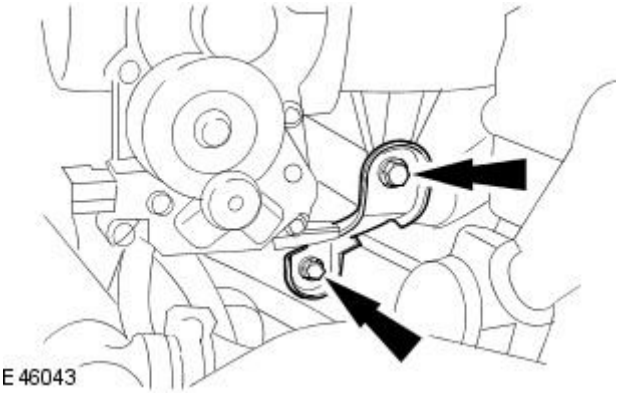

18. NOTE: 2.5L and 3.0L shown, 2.0L similar.

Remove the intake manifold support bracket.

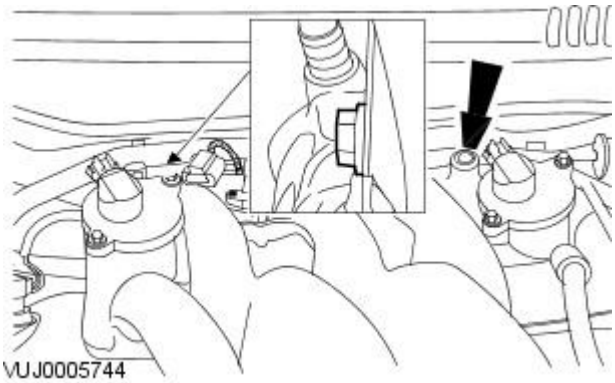

19. NOTE: 2.0L shown, 2.5L and 3.0L similar.

Detach the engine wiring harness bracket.

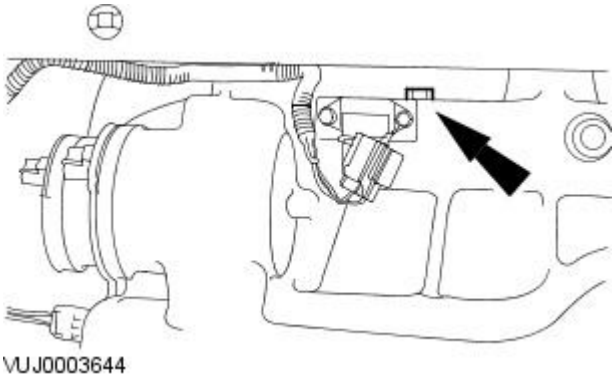

20. NOTE: 2.5L and 3.0L shown, 2.0L similar.

Detach the intake manifold support bracket.

Vehicles with 2.0L engine

21. WARNINGS:

Never remove the coolant expansion tank pressure cap under any circumstances while the engine is operating. Failure to follow this instruction may result in personal injury.

To avoid hot coolant or steam blowing out of the cooling system, use extreme care when removing the coolant expansion tank pressure cap. Wait until the engine has cooled down, then insulate the coolant pressure cap with a suitable cloth and slowly loosen the coolant expansion tank pressure cap until the cooling system pressure is released. Do not remove the coolant expansion tank pressure cap. Step back while the pressure is released from the system. When all of the pressure has been released slowly remove the coolant expansion tank pressure cap (still with the suitable cloth in position) from the coolant expansion tank. Failure to follow this instruction may result in personal injury.

Release the cooling system pressure.

- Remove the coolant expansion tank pressure cap.

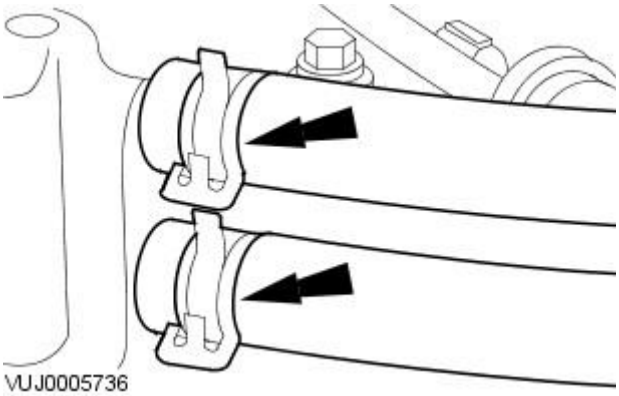

22. NOTE: Cap the coolant hoses to minimize coolant loss.

Detach the intake manifold coolant hoses.

Vehicles with 2.5L or 3.0L engine

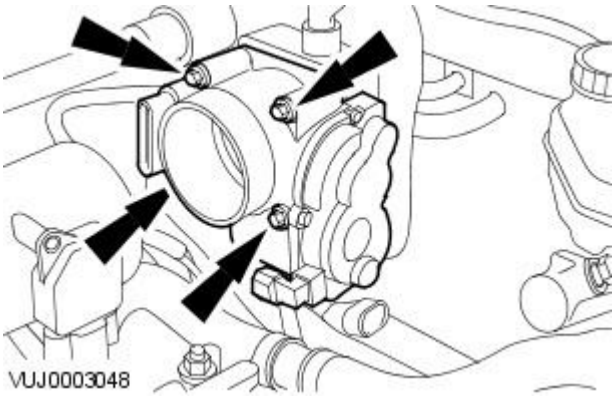

23. NOTE: Remove and discard the O-ring seal.

Detach the throttle body.

- Remove the retaining bolts.

All vehicles

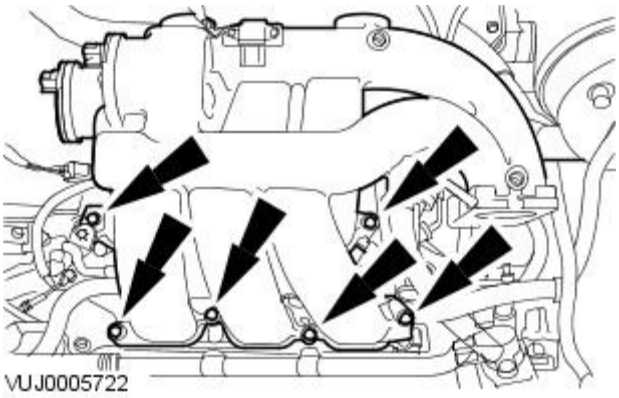

24. Remove the intake manifold.

- Remove and discard the intake manifold gaskets.

Installation

All vehicles

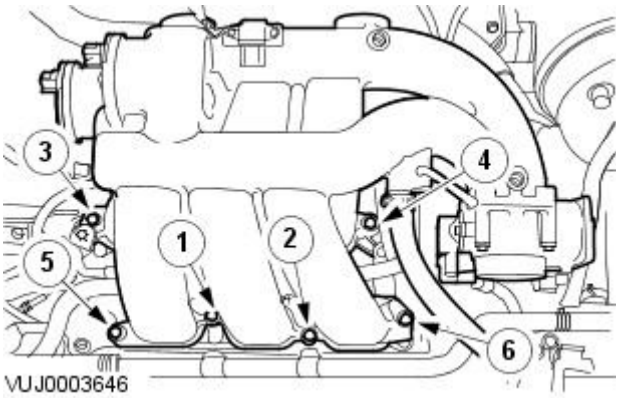

1. NOTE: Install new intake manifold gaskets.

• NOTE: The intake manifold retaining bolts in position 1, 4 and 5 are longer than the retaining bolts in position 2, 3 and 6.

• NOTE: Do not fully tighten the retaining bolts.

Install the intake manifold.

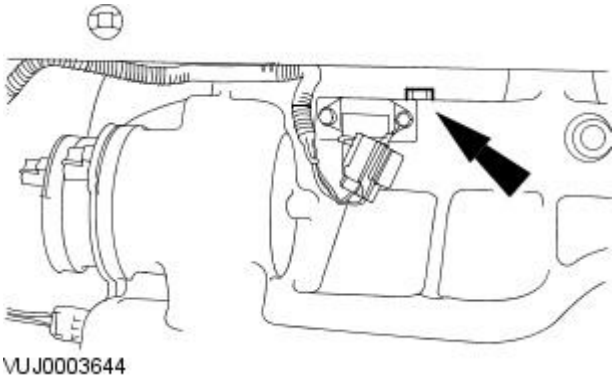

2. NOTE: 2.5L and 3.0L shown, 2.0L similar.

• NOTE: Do not fully tighten the retaining bolts.

Attach the intake manifold support bracket.

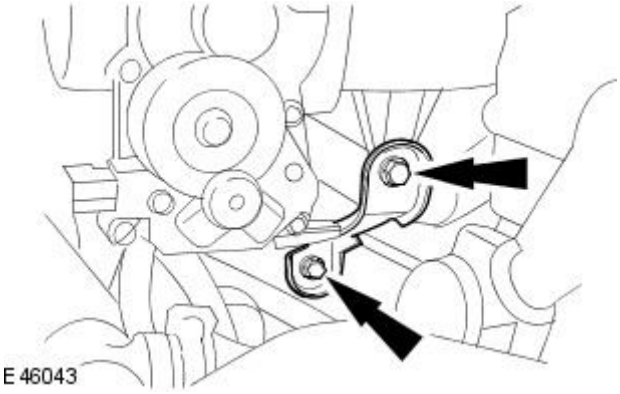

3. NOTE: 2.5L and 3.0L shown, 2.0L similar.

• NOTE: Do not fully tighten the retaining bolts.

Install the intake manifold support bracket.

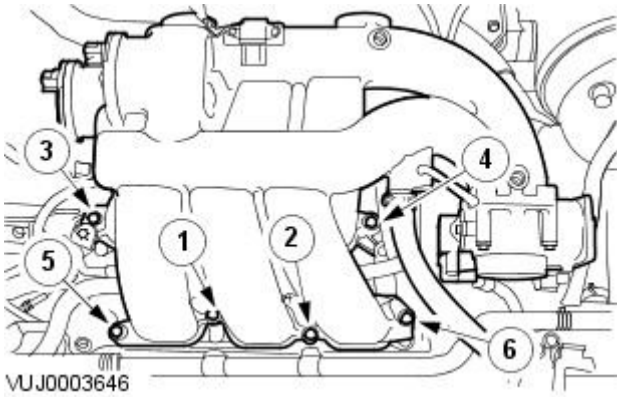

4. NOTE: The intake manifold retaining bolts in position 1, 4 and 5 are longer than the retaining bolts in position 2, 3 and 6.

• NOTE: 2.5L and 3.0L shown, 2.0L similar.

Tighten to 10 Nm.

- Complete the tightening sequence.

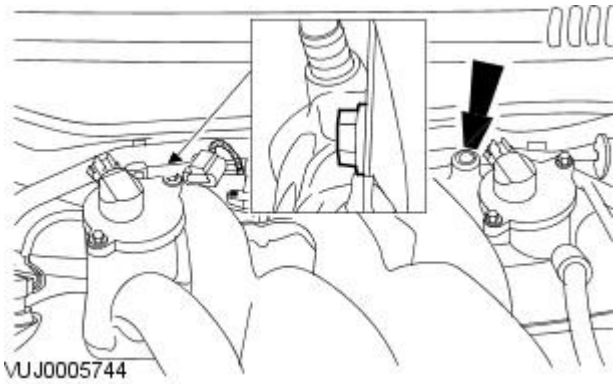

5. Tighten to 10 Nm.

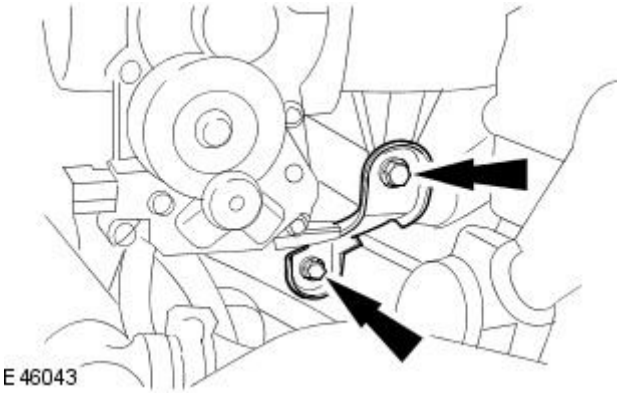

6. NOTE: 2.5L and 3.0L shown, 2.0L similar.

Tighten to 10 Nm.

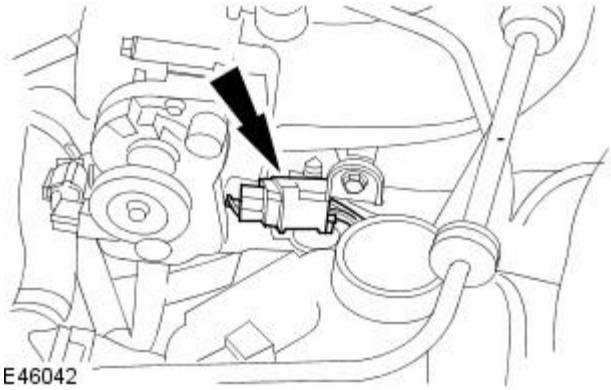

7. Attach the injector harness electrical connector to the intake manifold support bracket.

Vehicles with 2.5L or 3.0L engine

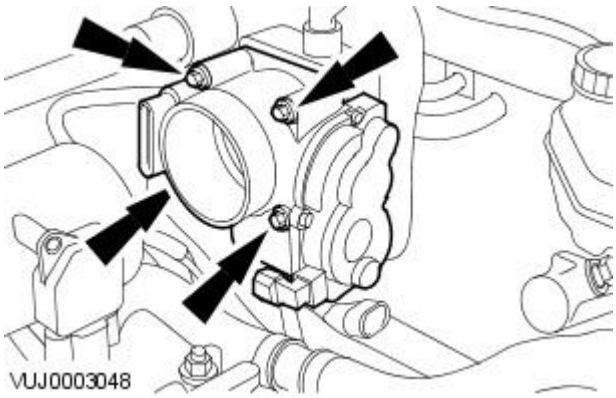

8. NOTE: Install a new O-ring seal.

Attach the throttle body.

- Install the retaining bolts.

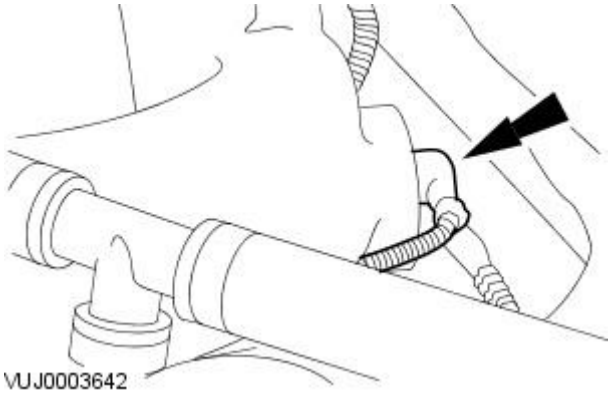

9. Connect the vacuum hose.

All vehicles

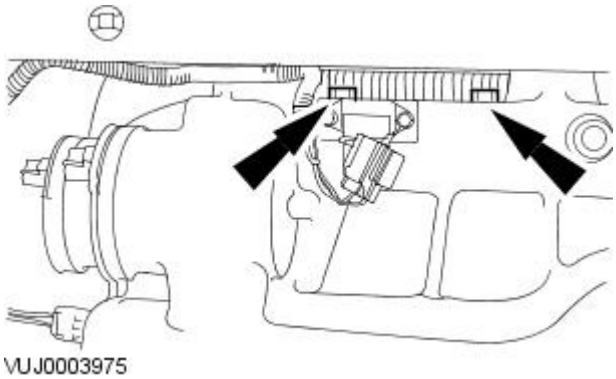

10. Attach the wiring harness.

- Tighten to 10 Nm.

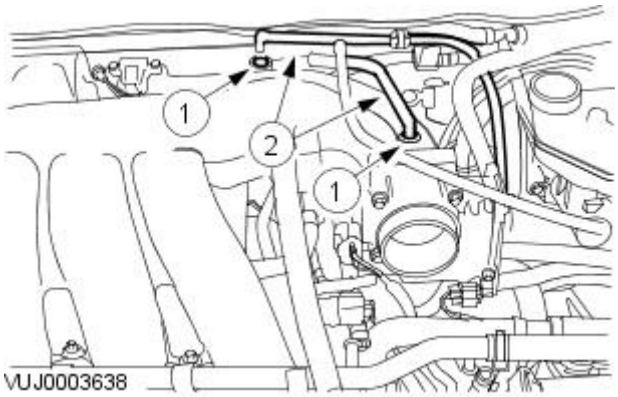

11. NOTE: 2.5L and 3.0L shown, 2.0L similar.

Attach the vacuum hoses.

1. Press the retaining ring.
2. Attach the vacuum hose.

Vehicles with 2.0L engine

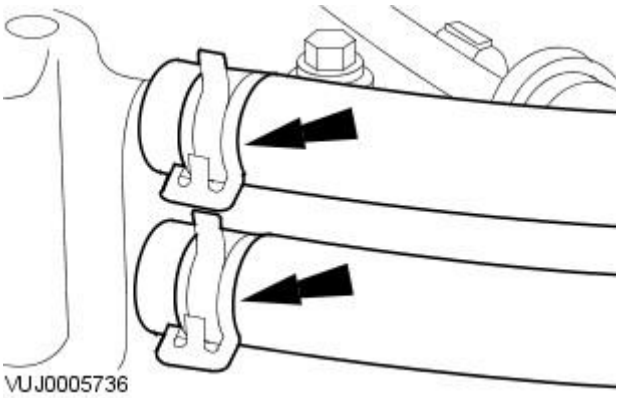

12. NOTE: Remove the coolant hose caps.

Attach the intake manifold coolant hoses.

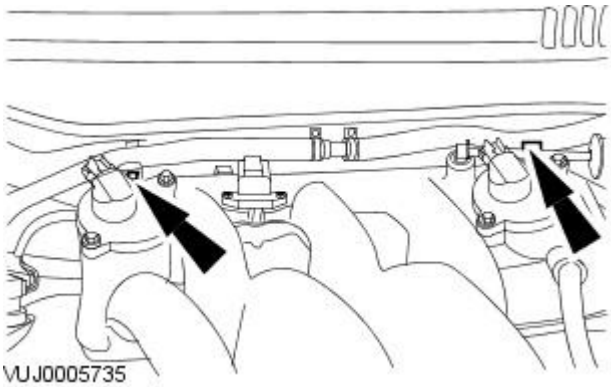

13. Attach the coolant hose to the retaining clips.

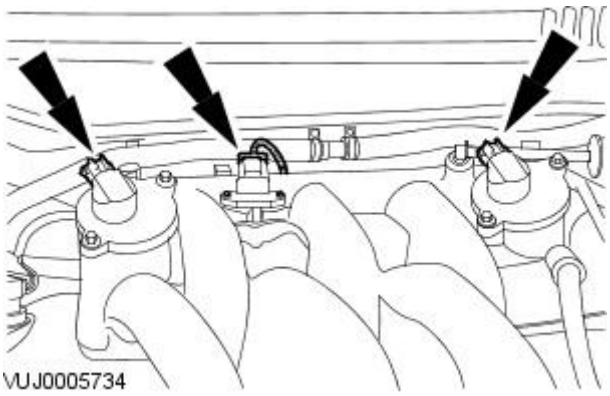

14. Connect the electrical connectors.

Vehicles with 2.5L or 3.0L engine

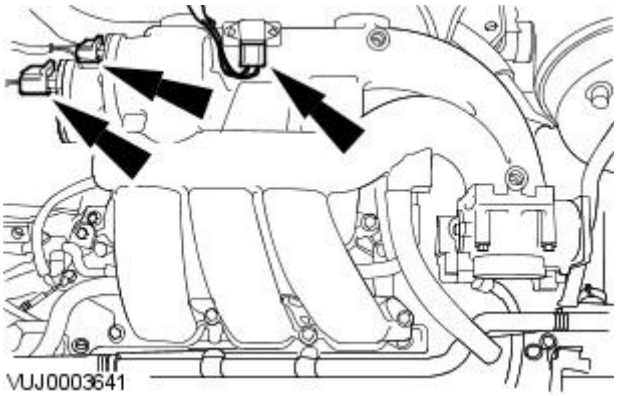

15. Connect the electrical connectors.

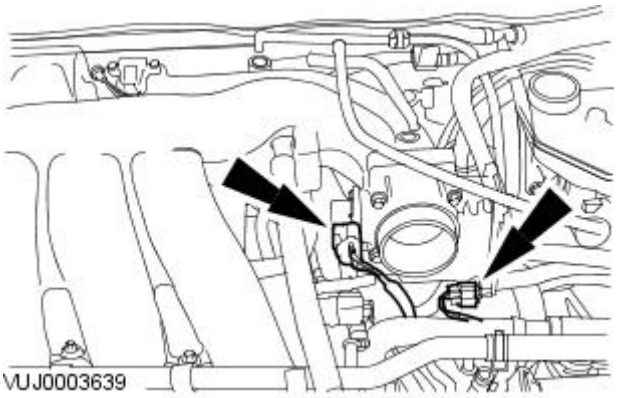

16. Connect the throttle body electrical connectors.

Vehicles with 2.0L engine

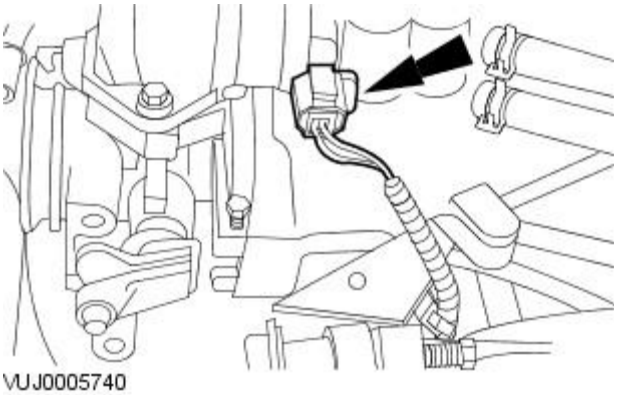

17. Connect the throttle body electrical connector.

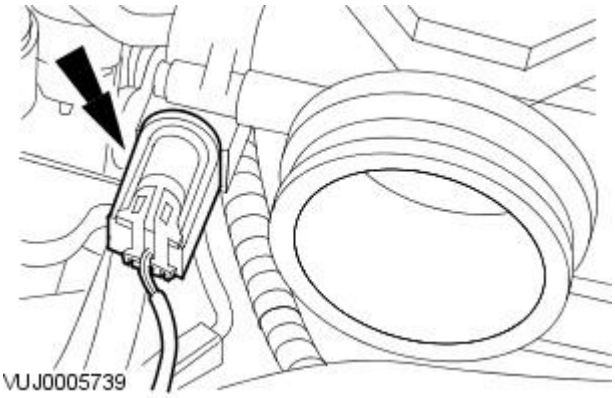

18. Connect the throttle body electrical connector.

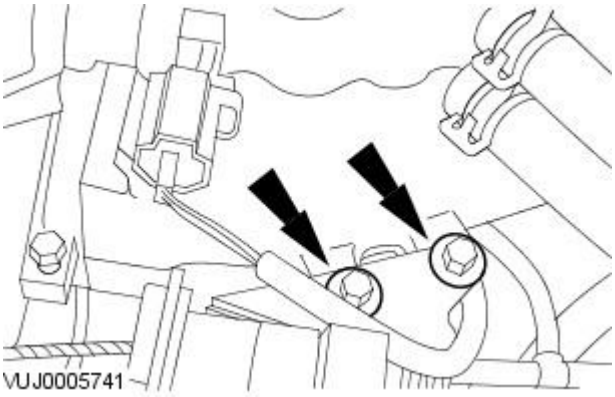

19. Attach the throttle cable retaining bracket.

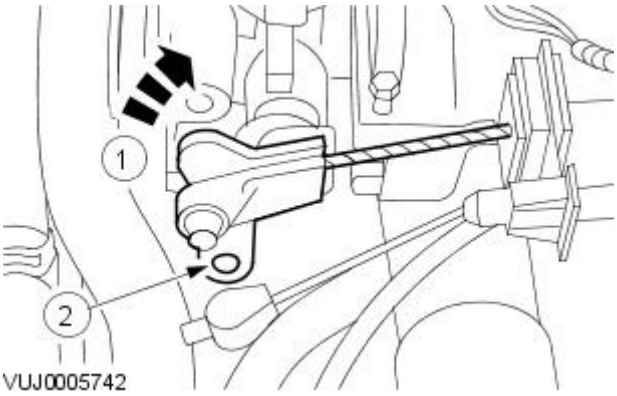

20. Attach the throttle cable.

1. Reposition the throttle lever to the fully open position.
2. Attach the throttle cable.

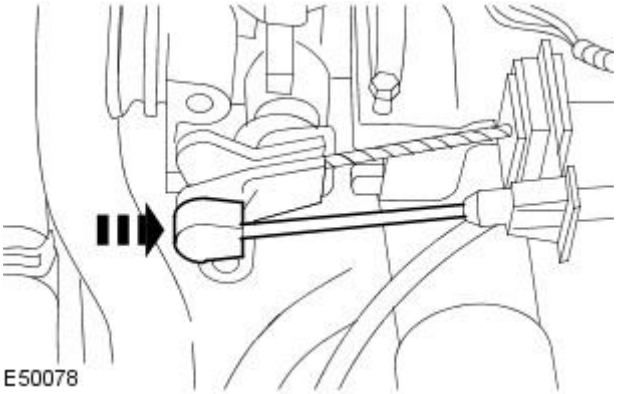

21. Attach the cruise control cable.

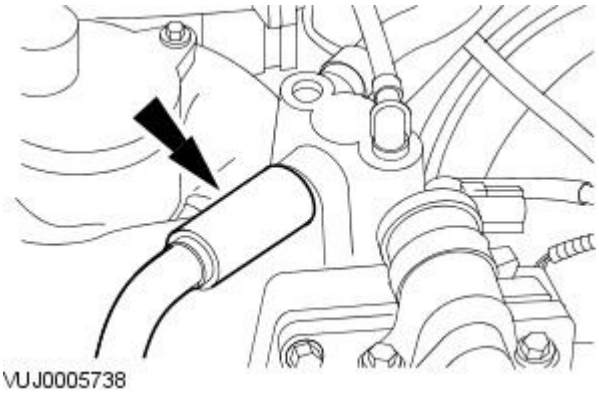

22. Attach the positive crank case ventilation hose.

23. Fill the cooling system up to the MAX mark on the coolant expansion tank using a fifty percent mixture of Jaguar Premium Cooling System Fluid or equivalent, meeting Jaguar specification WSS M97B44-D and fifty percent water.

Vehicles with 2.5L or 3.0L engine

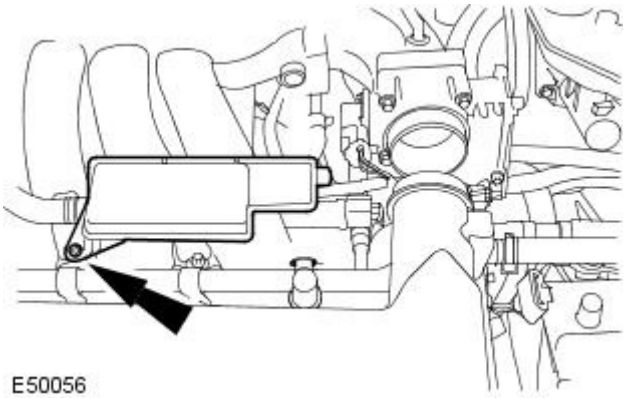

24. Install the air cleaner resonator.

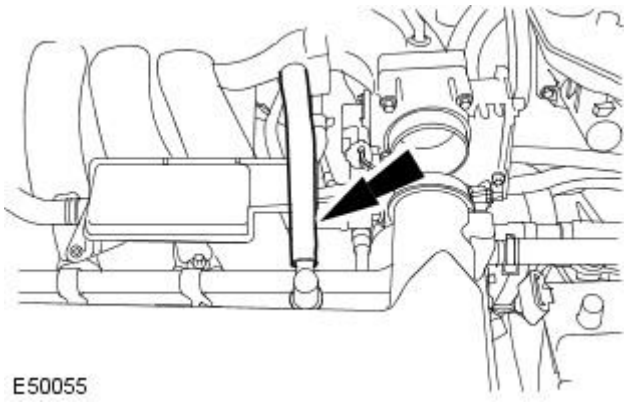

25. Install the positive crankcase ventilation hose.

All vehicles

26. Install the air filter outlet pipe.
For additional information, refer to: Air Cleaner Outlet Pipe (303-12A Intake Air Distribution and Filtering - 2.0L NA V6 - AJV6/2.5L NA V6 - AJV6/3.0L NA V6 - AJ27, Removal and Installation).

27. Install the engine cover (if equipped).

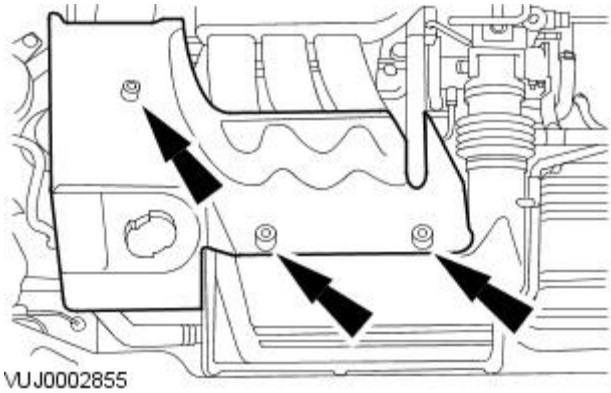

Engine - 2.0L NA V6 - AJV6 / 2.5L NA V6 - AJV6 / 3.0L NA V6 - AJ27 - Lower Intake Manifold

In-vehicle Repair

Removal

All vehicles

1. Remove the intake manifold.
   For additional information, refer to: Intake Manifold (303-01A Engine - 2.0L NA V6 - AJV6/2.5L NA V6 - AJV6/3.0L NA V6 - AJ27, In-vehicle Repair).
2. Disconnect the spring lock coupling.
   For additional information, refer to: Spring Lock Couplings (310-00 Fuel System - General Information, General Procedures).

Vehicles with 2.5L or 3.0L engine

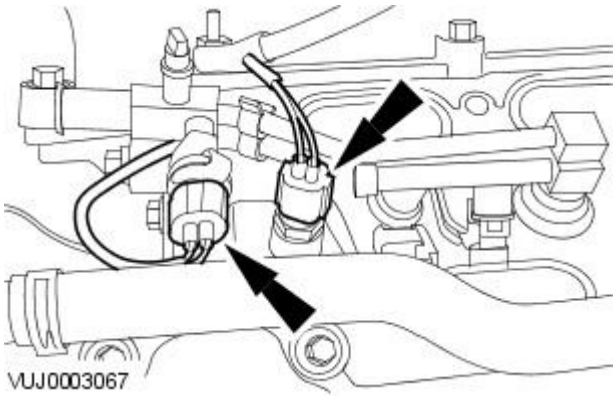

3. Disconnect the engine coolant temperature (ECT) and fuel temperature sensor electrical connectors.

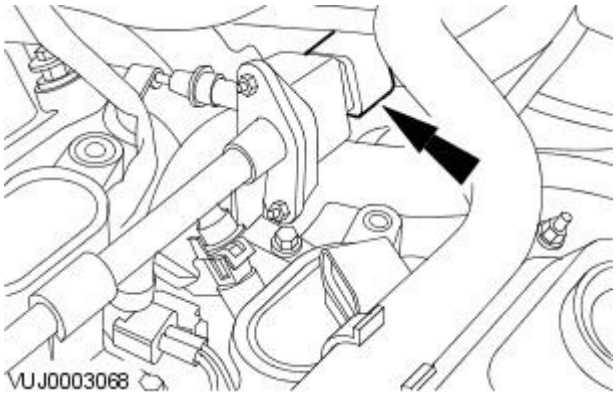

4. Disconnect the fuel pressure sensor electrical connector.

Vehicles with 2.0L engine

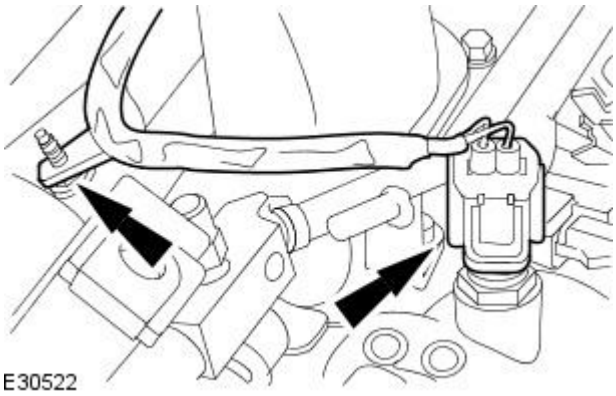

5. Disconnect the engine coolant temperature (ECT) electrical connector.
   - Detach the harness.

All vehicles

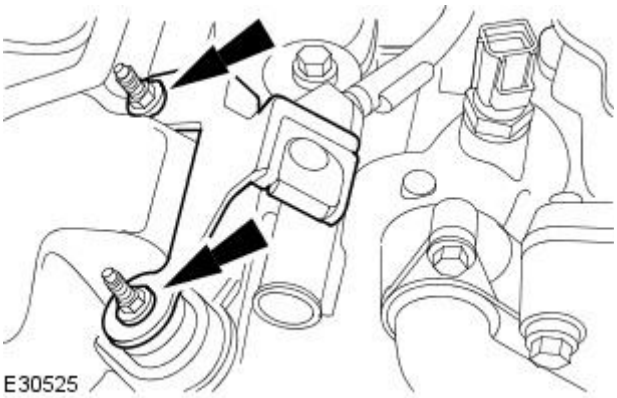

6. Remove the engine cover retaining bracket (if equipped).

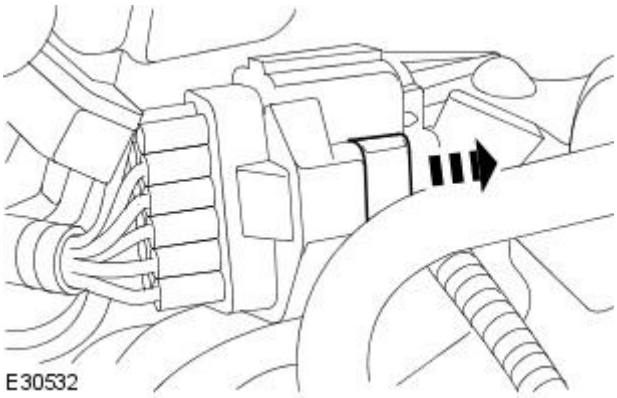

7. Disconnect the fuel injector harness electrical connector.

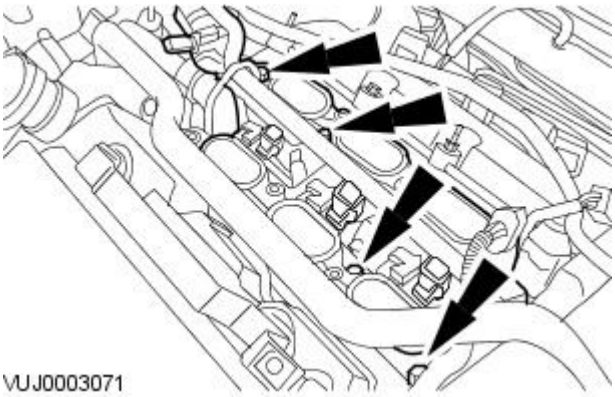

8. WARNING: Fuel may still be present in the fuel injection supply manifold.

• NOTE: Remove and discard the lower intake manifold O-ring seals.

Remove the lower intake manifold.

Installation

All vehicles

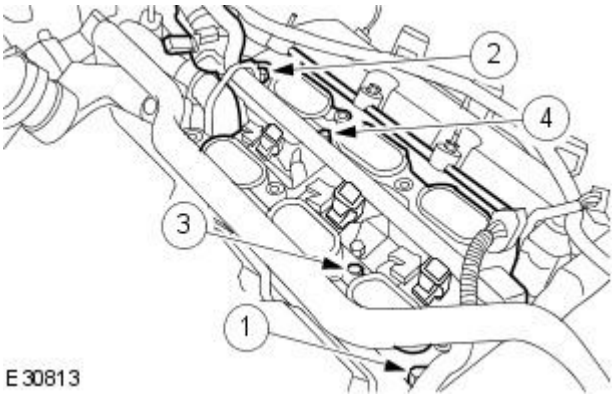

1. NOTE: Install new O-ring seals.

Install the lower intake manifold.

- Tighten the retaining bolts in the sequence shown.
- Tighten to 10 Nm.

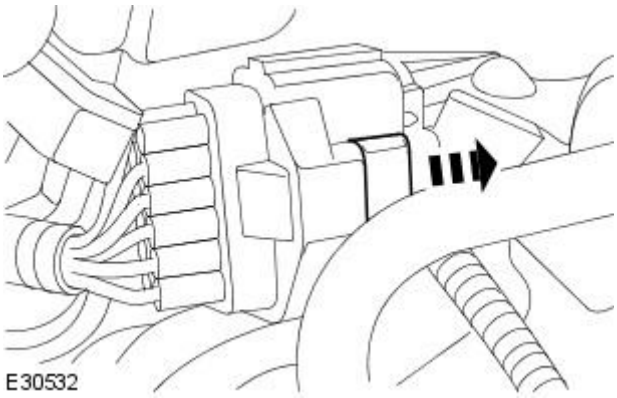

2. Connect the fuel injector harness electrical connector.

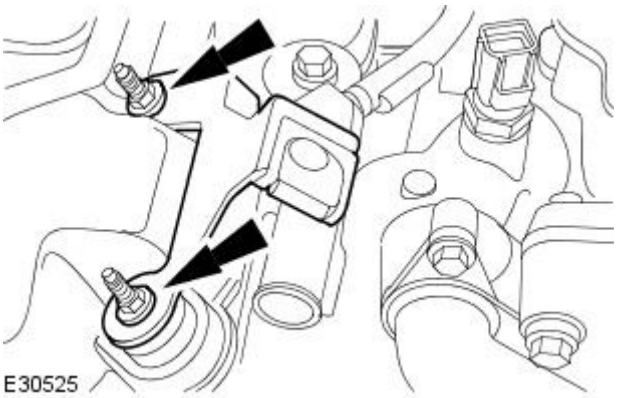

3. Install the engine cover retaining bracket (if equipped).

Vehicles with 2.0L engine

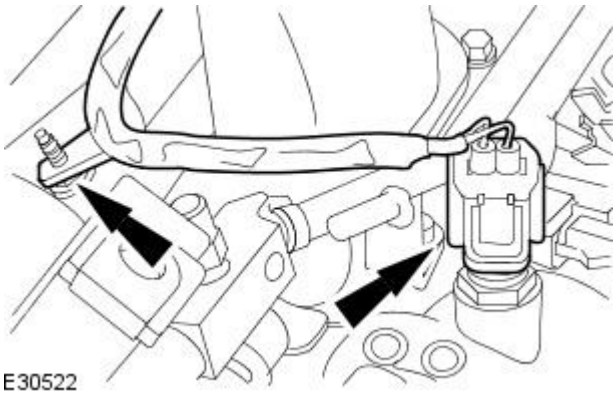

4. Connect the engine coolant temperature (ECT) electrical connector.

- Attach the harness.

Vehicles with 2.5L or 3.0L engine

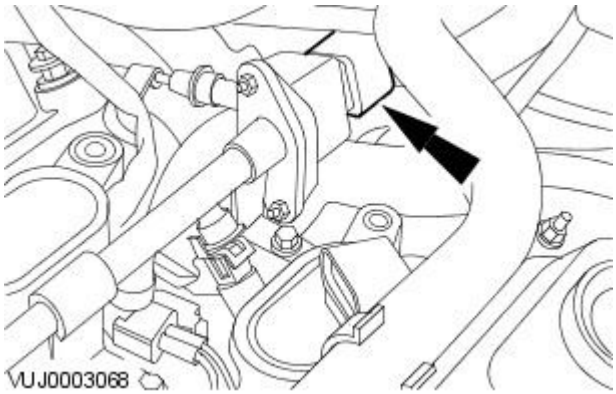

5. Connect the fuel pressure sensor electrical connector.

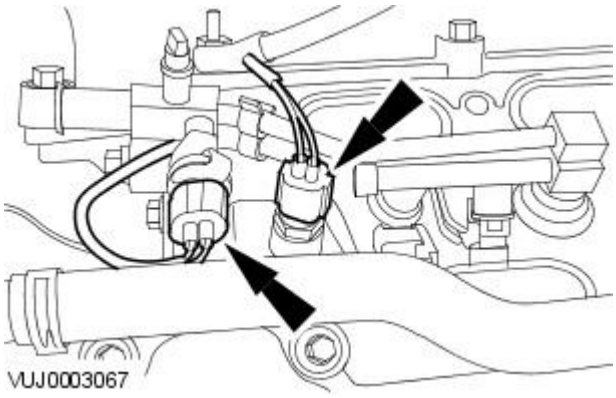

6. Connect the engine coolant temperature (ECT) and fuel temperature sensor electrical connectors.

7. Connect the spring lock coupling.
   For additional information, refer to: Spring Lock Couplings (310-00 Fuel System - General Information, General Procedures).

8. Install the intake manifold.
   For additional information, refer to: Intake Manifold (303-01A Engine - 2.0L NA V6 - AJV6/2.5L NA V6 - AJV6/3.0L NA V6 - AJ27, In-vehicle Repair).

Engine - 2.0L NA V6 - AJV6 / 2.5L NA V6 - AJV6 / 3.0L NA V6 - AJ27 - Oil Cooler

In-vehicle Repair

Removal

1. Drain the cooling system. For additional information, refer to Section 303-03A Engine CoolingSection 303-03B Engine Cooling.
2. Drain the engine oil.
3. Remove and discard the engine oil filter.

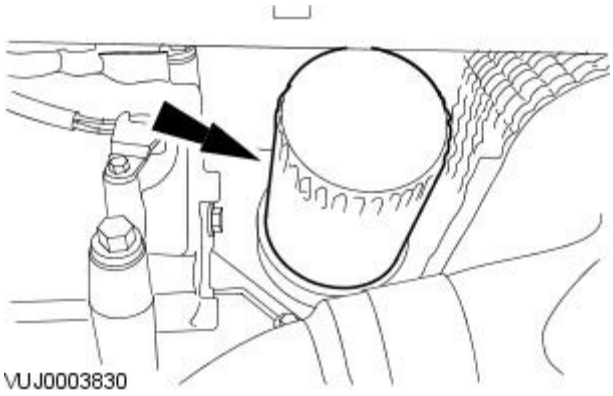

4. Detach the inlet and outlet coolant hoses.

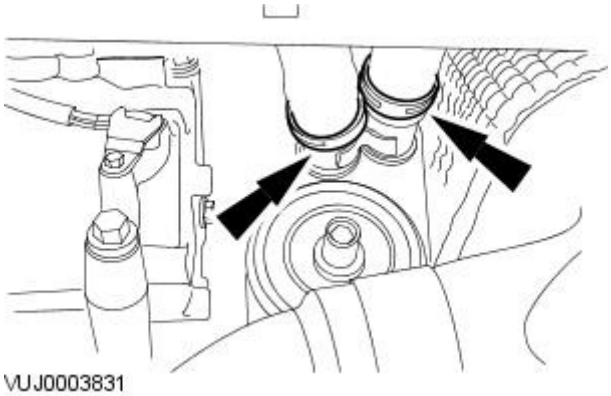

5. Remove the oil cooler.
   - Remove the oil cooler retaining bolt.
   - Remove and discard the oil cooler O-ring seal.

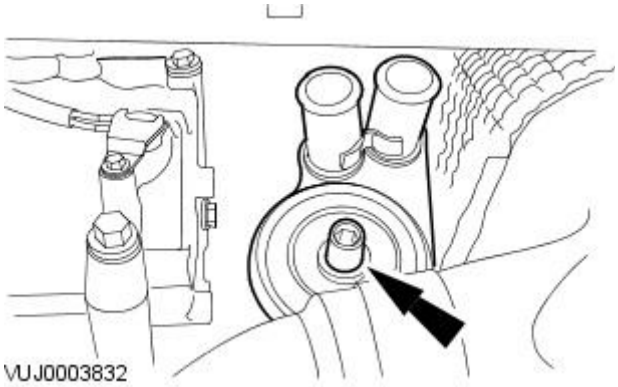

Installation

1. To install reverse the removal procedure.
2. NOTE: Make sure the oil cooler locating tag is correctly located.

   Install the oil cooler.
   - Install a new oil cooler O-ring seal.
   - Install the oil cooler retaining bolt.
   - Tighten to 57 Nm.

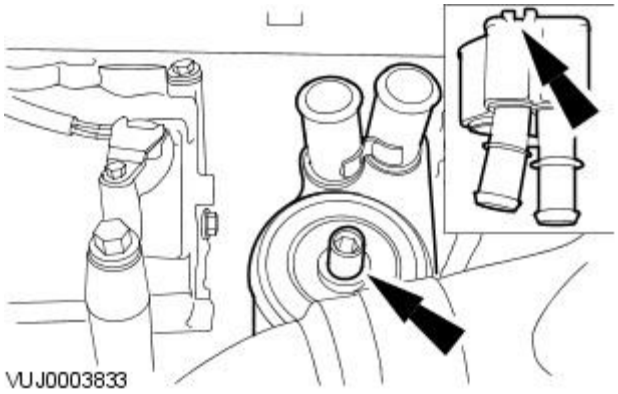

Engine - 2.0L NA V6 - AJV6 / 2.5L NA V6 - AJV6 / 3.0L NA V6 - AJ27 - Oil Pan

In-vehicle Repair

Special Tool(s)	
303-703	Accessory Belt Detensioner 303-703

Removal

All vehicles

1. Drain the engine oil.

Vehicles with 2.5L or 3.0L engine

2. Remove the transfer case. For additional information, refer to Section 308-07 Transfer Case.

Vehicles with 2.0L engine

3. Detach the exhaust link pipe rear retaining clamp.

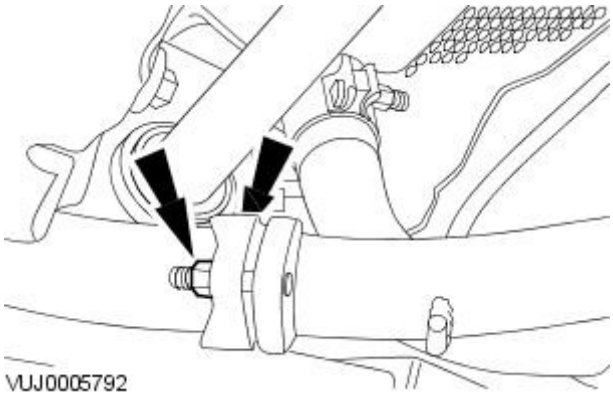

4. Remove the link pipe.

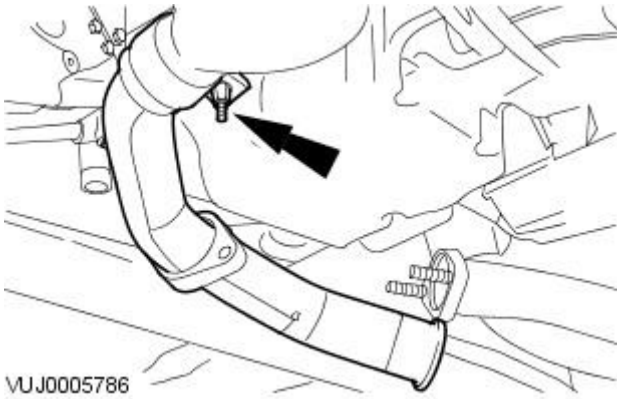

5. Remove the catalytic converter retaining bracket.

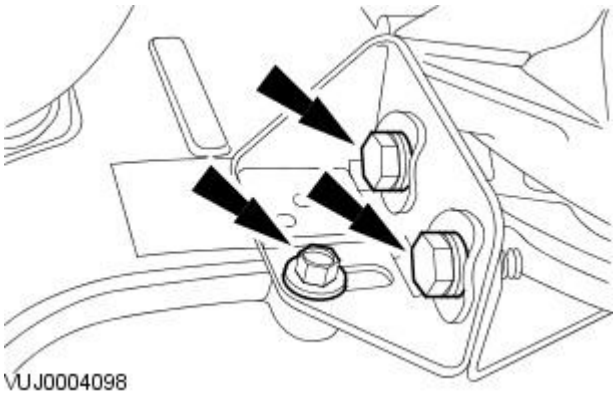

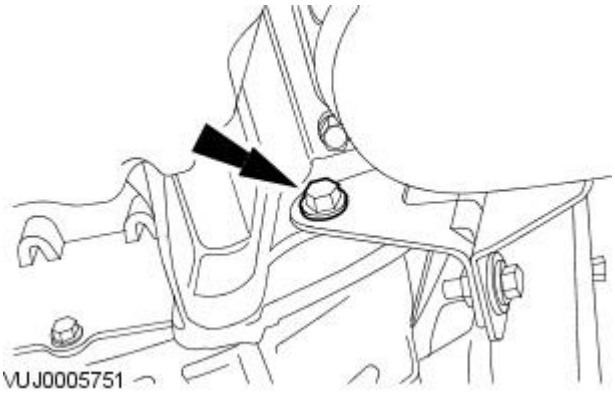

6. Remove the sump to transmission securing bolt.

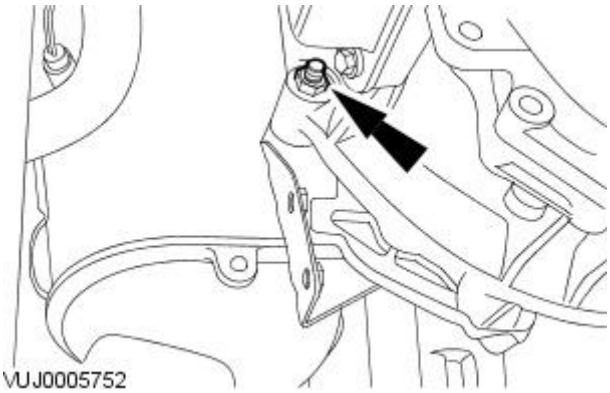

7. Slacken but not remove the upper catalyst retaining bracket support securing bolt.

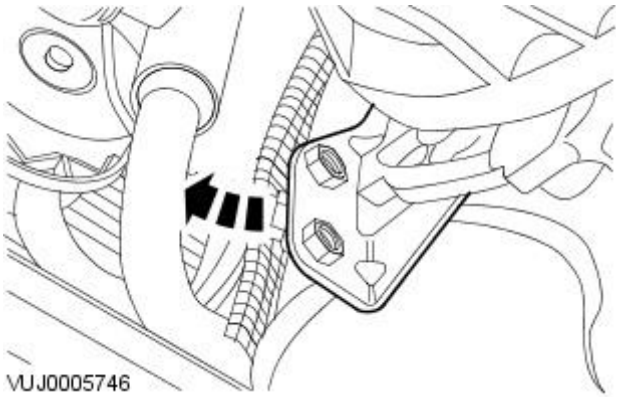

8. Reposition the catalyst retaining bracket support.

All vehicles

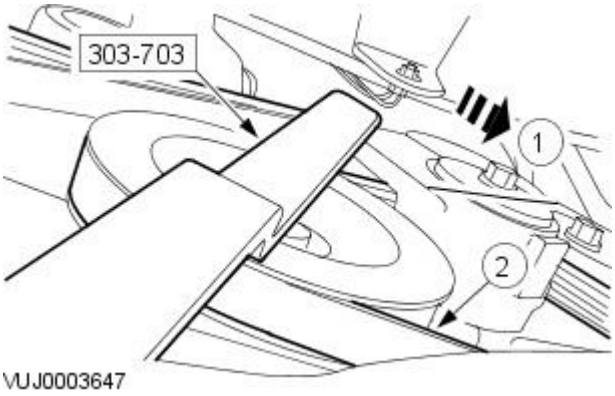

9. Detach the accessory drivebelt.

1. Using the special tool rotate the belt tensioner counter-clockwise.
2. Detach the accessory drivebelt.

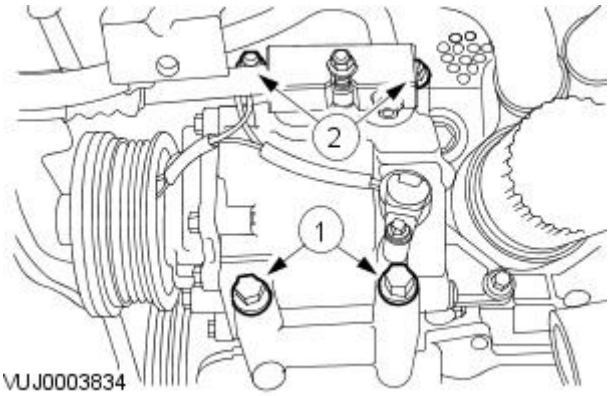

10. NOTE: Do not remove the A/C compressor upper retaining bolts.

Reposition the air conditioning (A/C) compressor.

1. Remove the A/C compressor lower retaining bolts.
2. Loosen the A/C compressor upper retaining bolts.

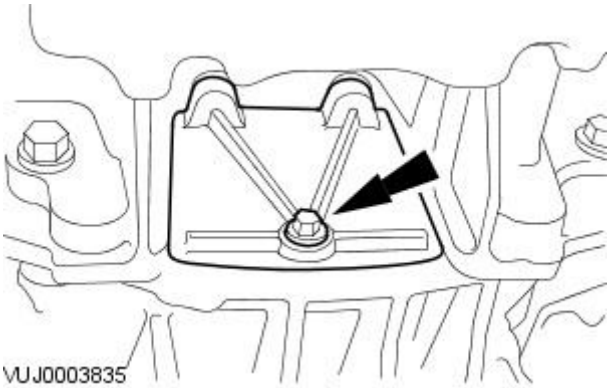

11. Remove the access cover.

Vehicles with 2.0L engine

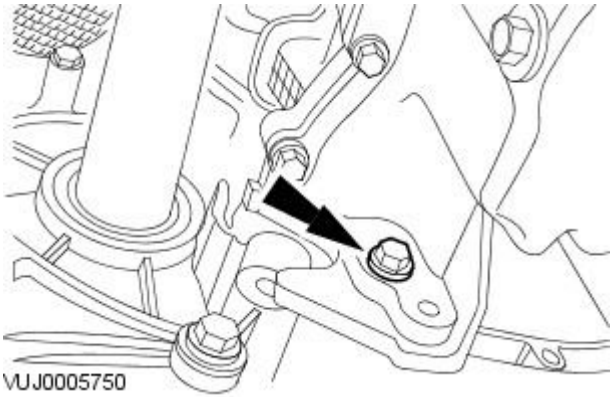

12. Remove the retaining bolt.

Vehicles with 2.5L or 3.0L engine

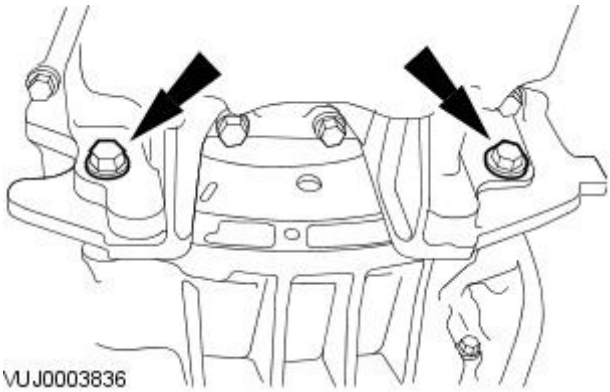

13. Remove the retaining bolts.

All vehicles

www.JagDocs.com

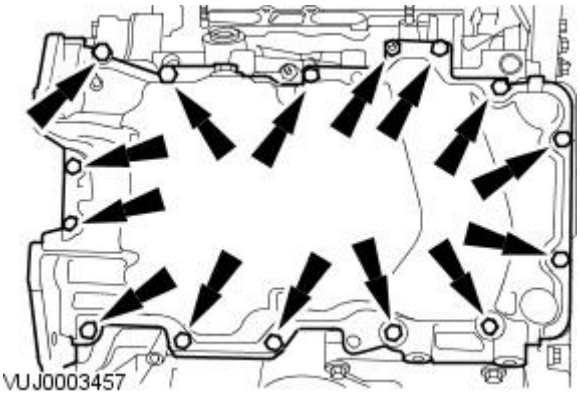

14. Remove the oil pan.

- Remove and discard the gasket.
- Clean and inspect the oil pan and the cylinder block sealing surfaces using metal surface cleaner or equivalent meeting Jaguar specification WSE-M5B392-A.

Installation

All vehicles

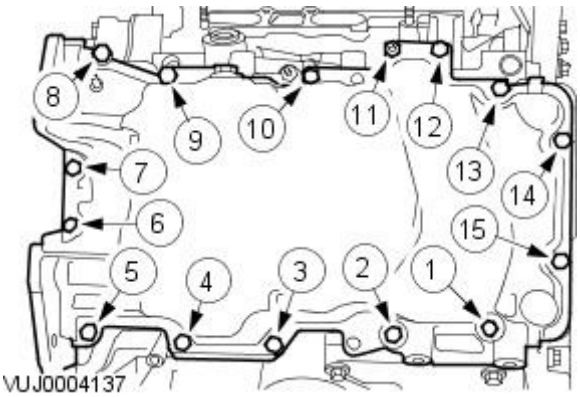

1. NOTE: Apply a 10 mm diameter dot of silicone sealant WSE-M4G323-A6 or equivalent meeting Jaguar specification to the engine front cover to the cylinder block mating joints.

• NOTE: Loosely install the oil pan to transmission housing bolts.

• NOTE: The oil pan retaining bolts numbered 1 and 2 are longer than the retaining bolts numbered 3 through 15.

• NOTE: Tighten the oil pan bolts within six minutes of applying sealer.

To install, reverse the removal procedure.

- Install the new oil pan gasket.
- Complete the tightening sequence.
- Tighten to 25 Nm.

Vehicles with 2.0L engine

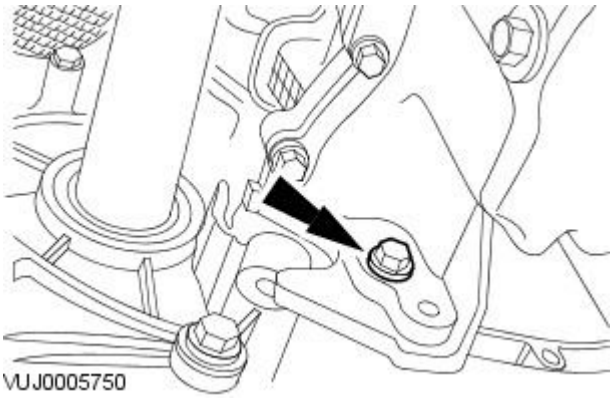

2. Tighten to 45 Nm.

Vehicles with 2.5L or 3.0L engine

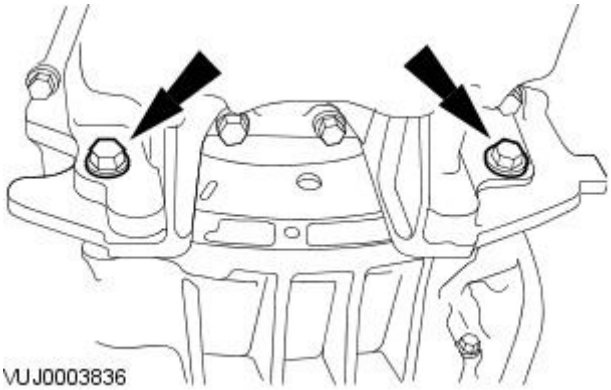

3. Tighten to 45 Nm.

All vehicles

4. Tighten to 10 Nm.

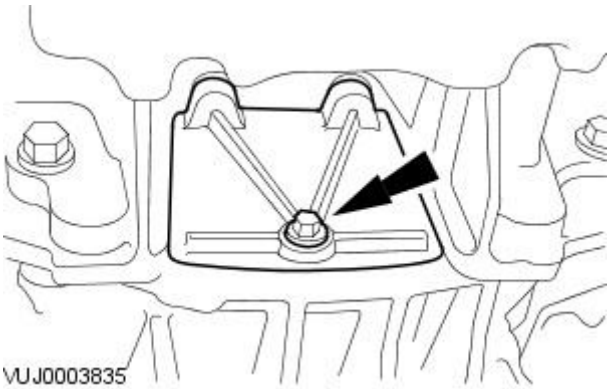

5. Tighten to 25 Nm.

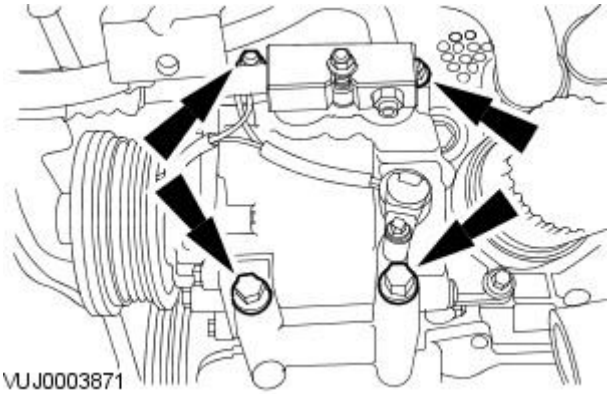

Vehicles with 2.0L engine

6. Tighten to 25 Nm.

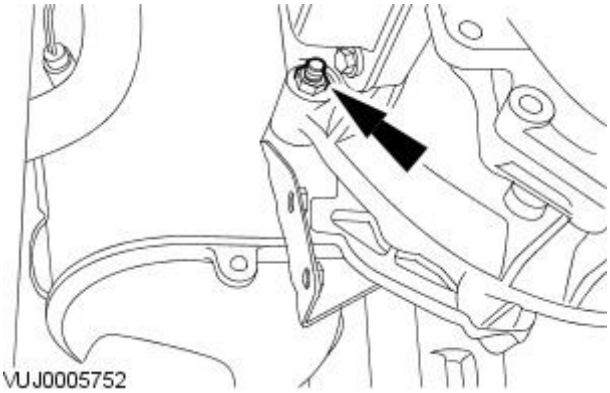

7. Tighten to 45 Nm.

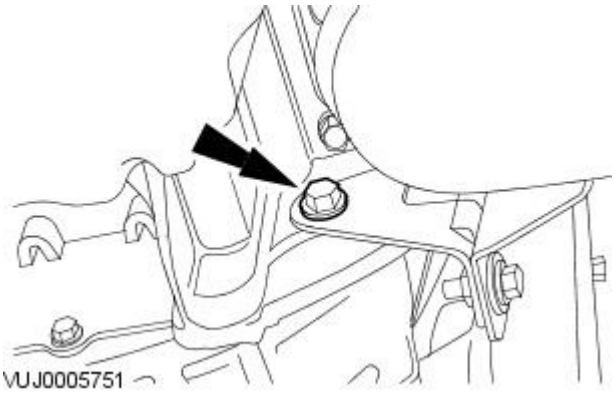

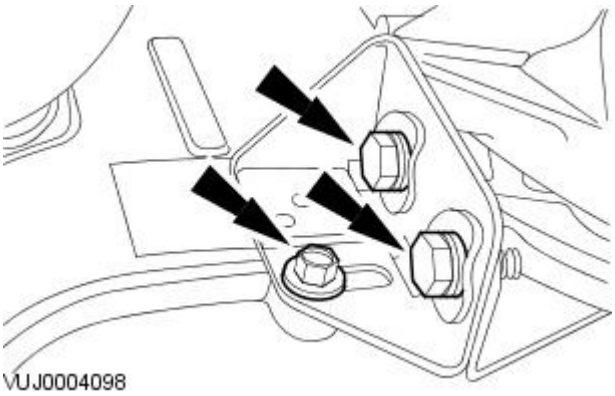

8. Tighten to 25 Nm,

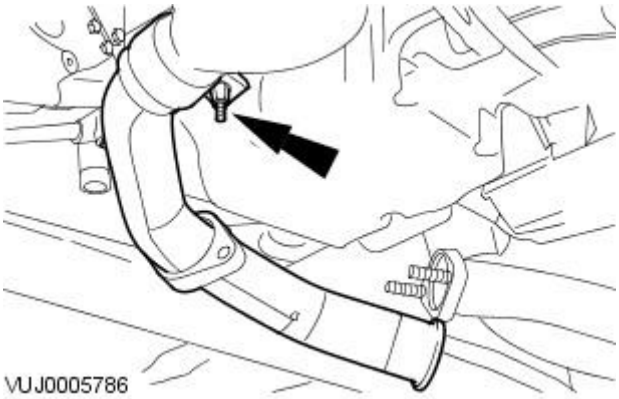

9. Tighten to 55 Nm.

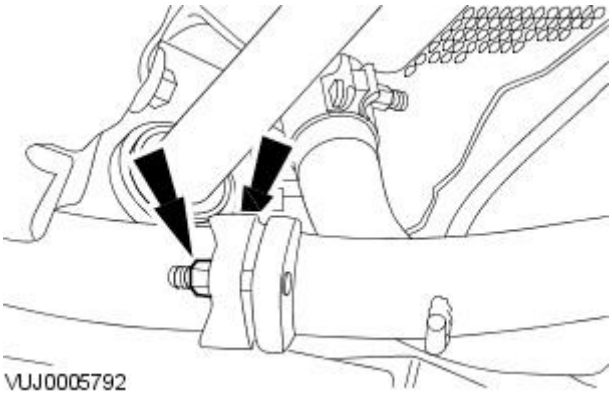

10. Tighten to 55 Nm.

Vehicles with 2.5L or 3.0L engine

11. Install the transfer case. For additional information, refer to Section 308-07 Transfer Case.

All vehicles

12. NOTE: Use oil WSE-M2C908-A or equivalent meeting Jaguar specification.

Refill the engine with oil.

Engine - 2.0L NA V6 - AJV6 / 2.5L NA V6 - AJV6 / 3.0L NA V6 - AJ27 - Oil Pressure Sender

In-vehicle Repair

Removal

1. Raise and support the vehicle.
   For additional information, refer to Section 100-02 Jacking and Lifting.
2. Remove and discard the oil filter.

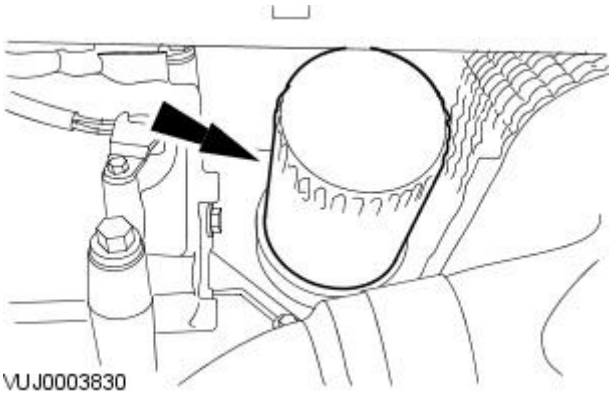

3. Disconnect the oil pressure sender electrical connector.

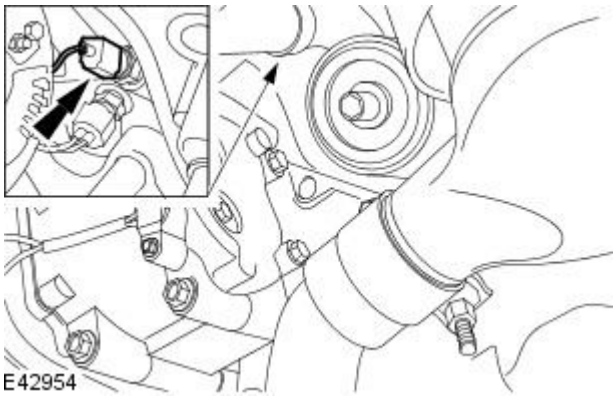

4. Remove the oil pressure sender.

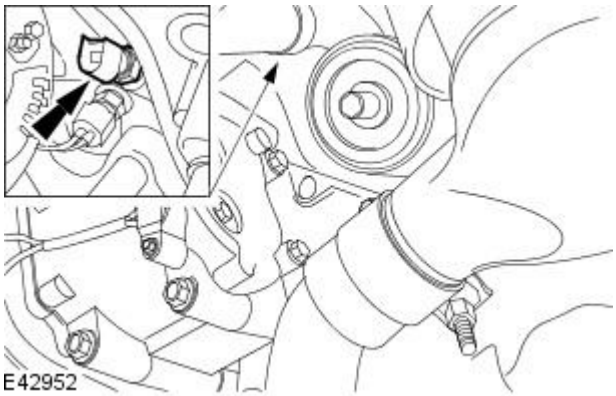

Installation

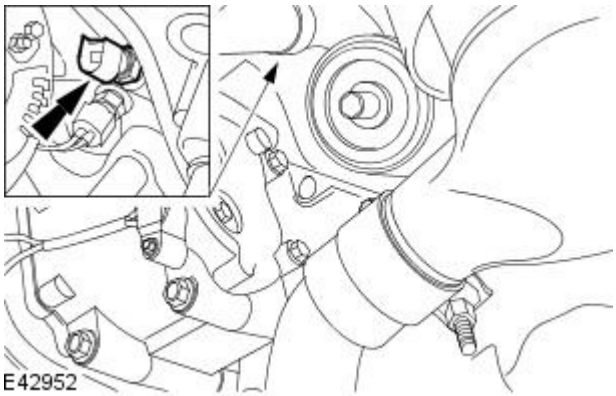

1. NOTE: Apply a small bead of sealant WSK-M4G328-A3 or equivalent sealant meeting Jaguar specification on the first three threads of the oil pressure sender.

   To install, reverse the removal procedure.

   - Tighten to 15 Nm.

2. Install a new oil filter.
3. NOTE: Use oil WSE-M2C908-A or equivalent meeting Jaguar specification.

   Check and top up the engine with oil.

Engine - 2.0L NA V6 - AJV6 / 2.5L NA V6 - AJV6 / 3.0L NA V6 - AJ27 - Oil Pump

In-vehicle Repair

Removal

1. Remove the timing chains. For additional information, refer to Timing Drive Components.
2. Remove and discard the engine oil filter.

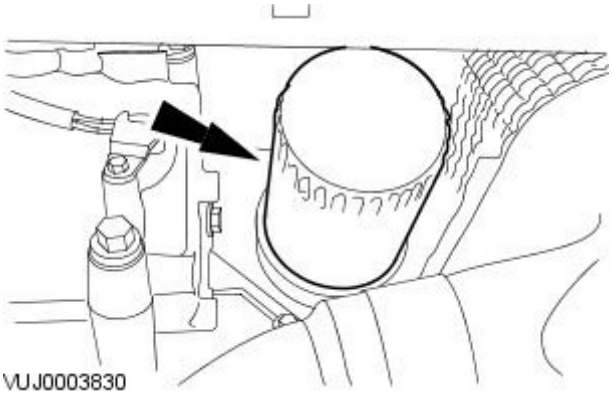

3. Remove the oil pump tube.

4. Remove the oil pump.
   - Remove and discard the O-ring seal.
   - Inspect the oil pump for damage and wear.

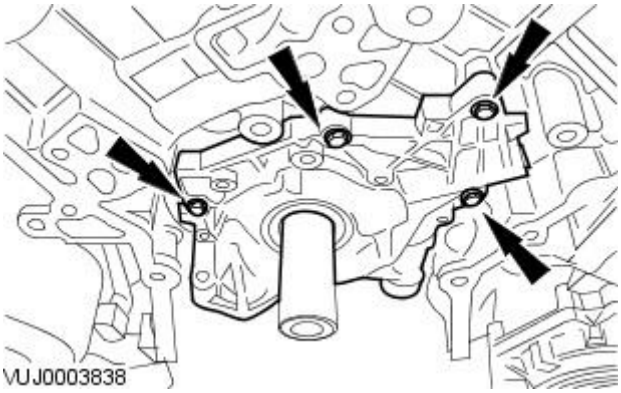

Installation

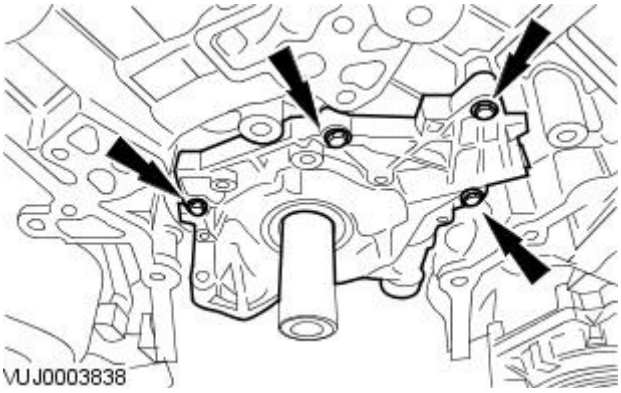

1. CAUTIONS:

Install the oil pump flush to the cylinder block for correct sealing.

Rotate the inner rotor of the oil pump to align with the flats on the crankshaft before installation.

Install the oil pump.

- Tighten to 10 Nm.

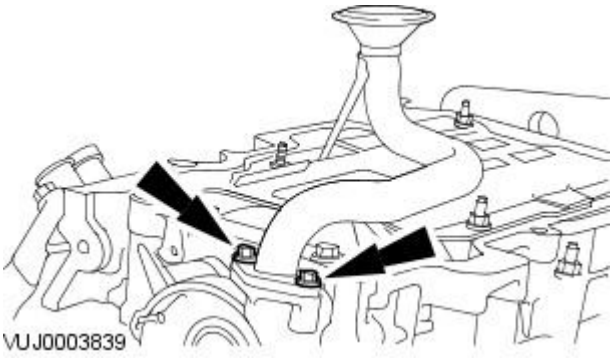

2. Install the oil pump tube.

- Install a new O-ring seal.
- Tighten to 10 Nm.

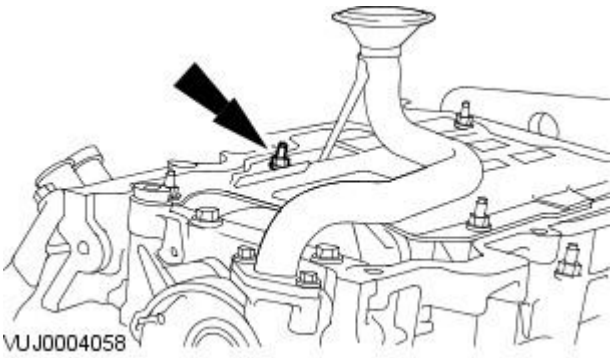

3. Tighten to 5 Nm + 45°.

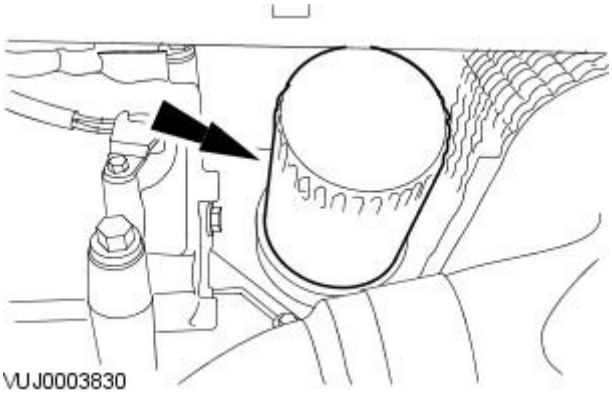

4. Install a new engine oil filter.

5. Install the timing chains. For additional information, refer to Timing Drive Components.

Engine - 2.0L NA V6 - AJV6 / 2.5L NA V6 - AJV6 / 3.0L NA V6 - AJ27 - Timing Drive Components

In-vehicle Repair

Removal

1. Remove the engine front cover.
   For additional information, refer to: Engine Front Cover (303-01A Engine - 2.0L NA V6 - AJV6/2.5L NA V6 - AJV6/3.0L NA V6 - AJ27, In-vehicle Repair).
2. Remove the spark plugs.
3. NOTE: Note the position of the crankshaft position (CKP) sensor pulse wheel during removal. It must be returned to its original position during installation.

   Remove the crankshaft position (CKP) sensor pulse wheel.

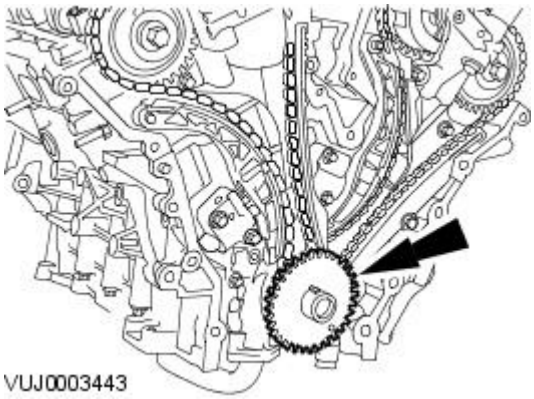
VUJ0003443

4. CAUTION: Do not rotate the crankshaft counterclockwise. The timing chains may bind causing engine damage.

   Install the crankshaft pulley retaining bolt and washer.

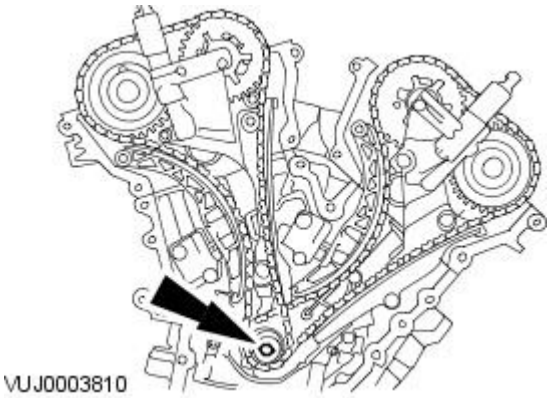
VUJ0003810

5. CAUTION: Do not rotate the crankshaft counterclockwise. The timing chains may bind causing engine damage.

   Rotate the crankshaft clockwise until the crankshaft keyway is at the 7 O'clock position, the alignment mark on the right-hand intake camshaft sprocket is at the 1 O'clock position and the alignment mark on the right-hand exhaust camshaft sprocket is at the 8 O'clock position.

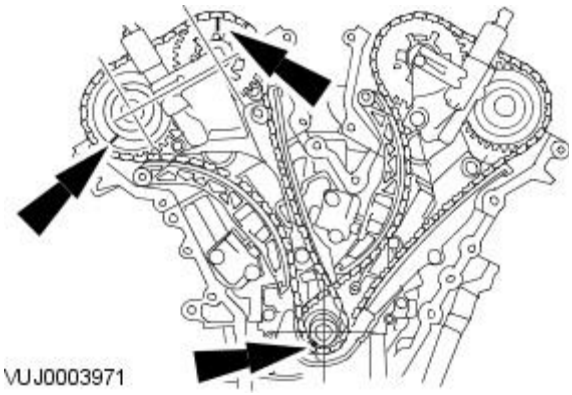
VUJ0003971

6. Release the timing chain tensioner ratchet.

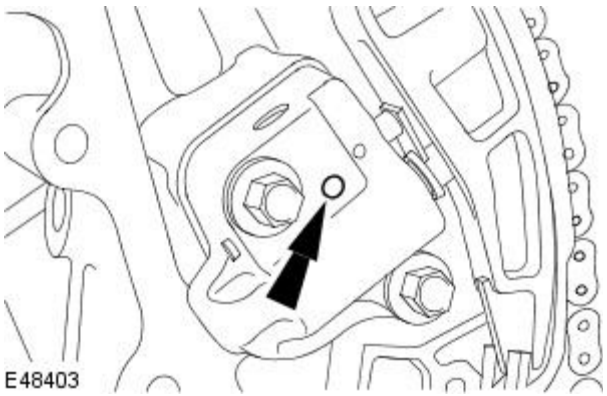
E48403

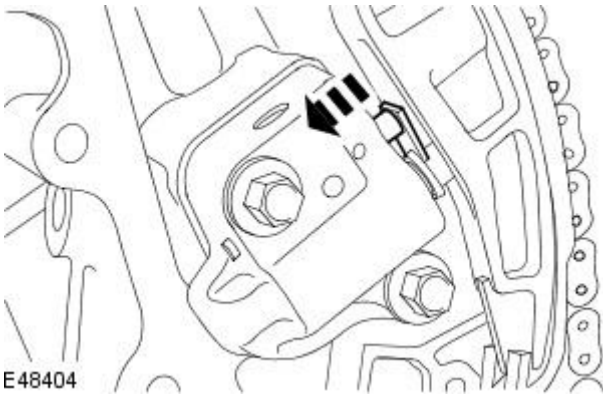

7. NOTE: Keep the timing chain tensioner ratchet released.

Reposition the timing chain tensioner plunger.

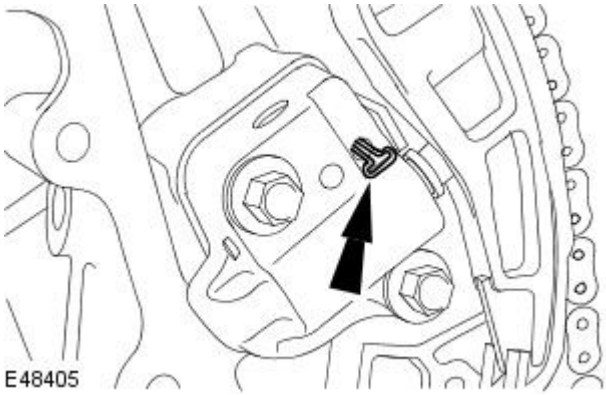

8. Retain the timing chain tensioner plunger.

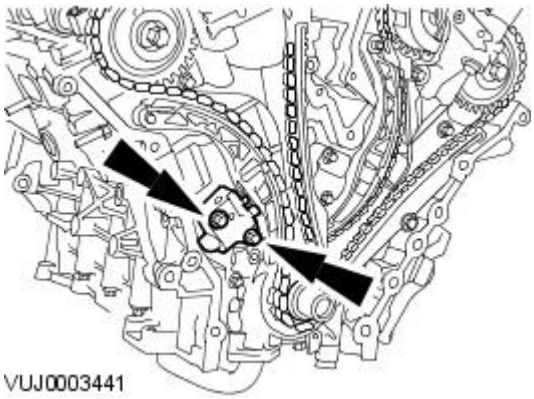

9. Remove the right-hand timing chain tensioner.

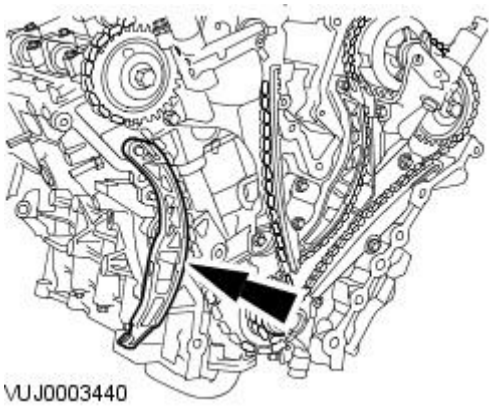

10. Remove the right-hand timing chain outer guide.

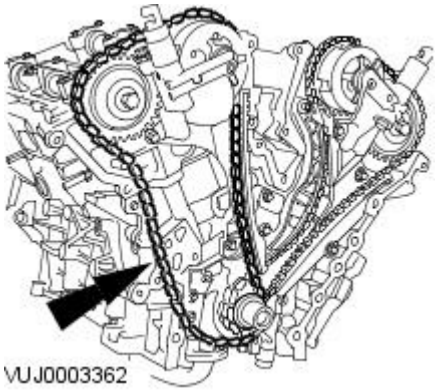

11. Remove the right-hand timing chain.

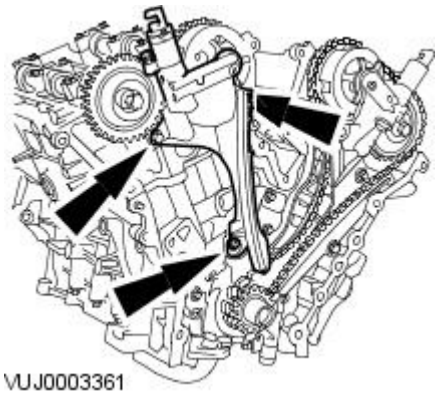

12. CAUTION: Inspect and replace the O-ring seal if necessary.

Remove the right-hand timing chain inner guide.

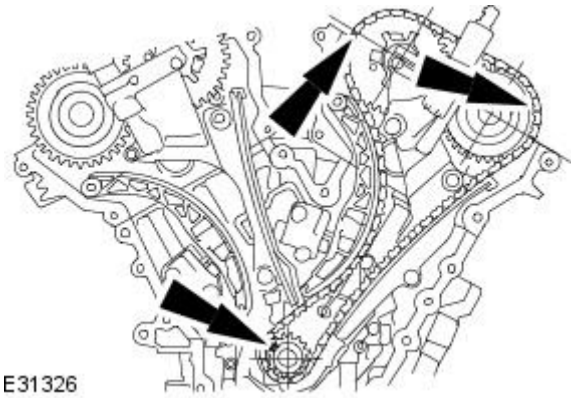

13. CAUTION: Do not rotate the crankshaft counterclockwise. The timing chains may bind causing engine damage.

Rotate the crankshaft clockwise until the crankshaft keyway is at the 11 O'clock position, the alignment mark on the left-hand intake camshaft sprocket is at the 9 O'clock position and the alignment mark on the left-hand exhaust camshaft sprocket is at the 2 O'clock position.

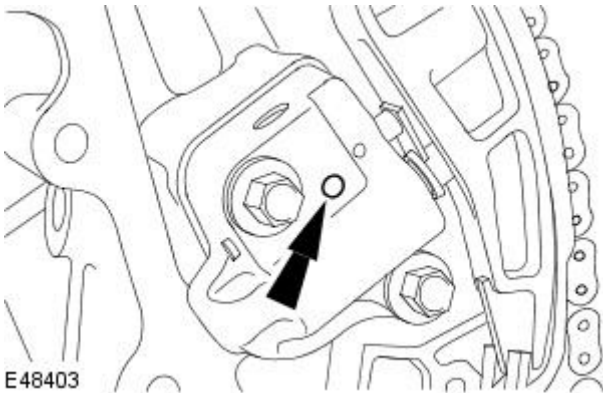

14. NOTE: Right-hand bank shown, left-hand bank similar.

Release the timing chain tensioner ratchet.

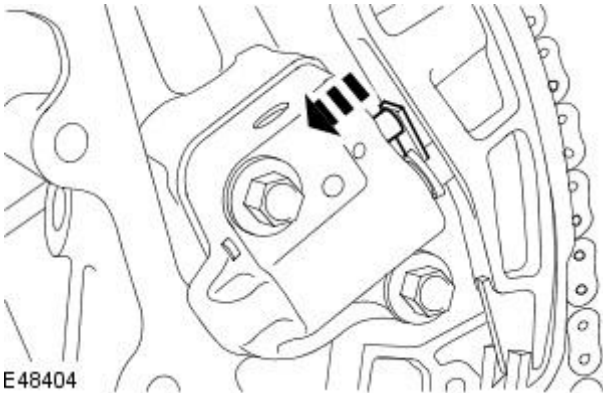

15. NOTE: Right-hand bank shown, left-hand bank similar.

- NOTE: Keep the timing chain tensioner ratchet released.

Reposition the timing chain tensioner plunger.

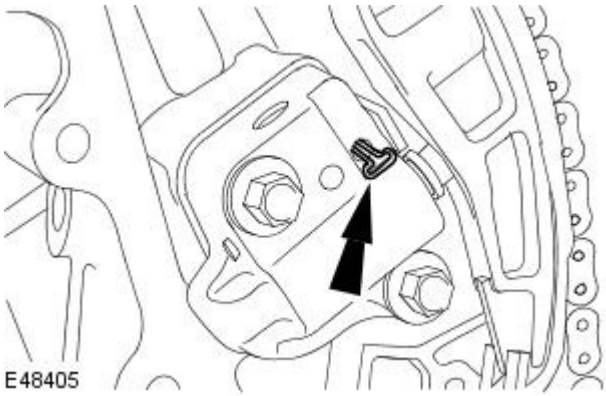

16. NOTE: Right-hand bank shown, left-hand bank similar.

Retain the timing chain tensioner plunger.

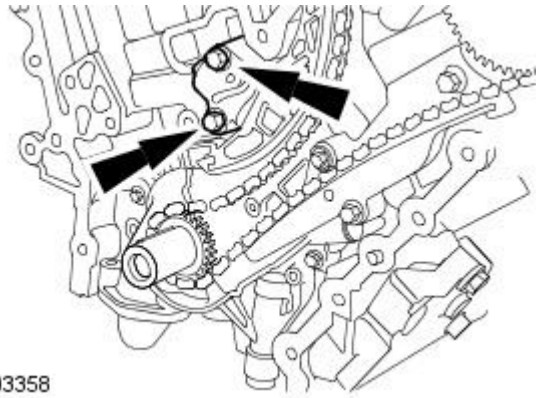

VUJ0003358

17. Remove the left-hand timing chain tensioner.

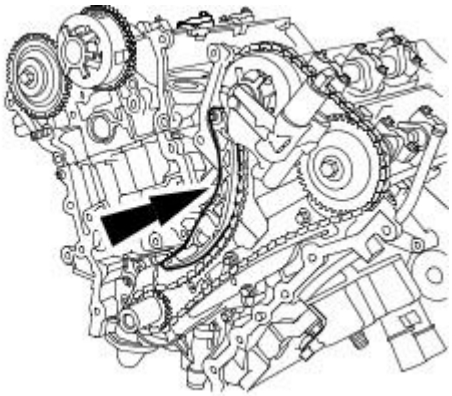

VUJ0003357

18. Remove the left-hand timing chain inner guide.

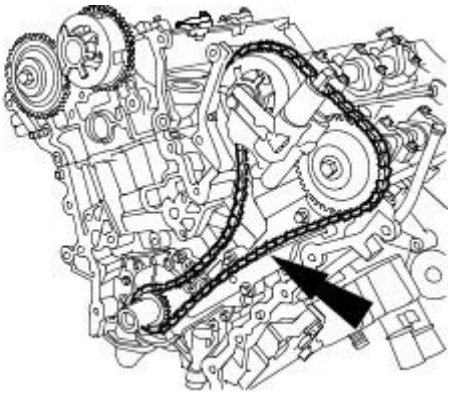

VUJ0003356

19. Remove the left-hand timing chain.

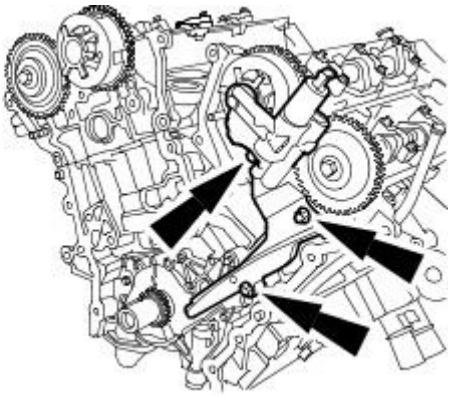

VUJ0003355

20. CAUTION: Inspect and replace the O-ring seal if necessary.

Remove the left-hand timing chain outer guide.

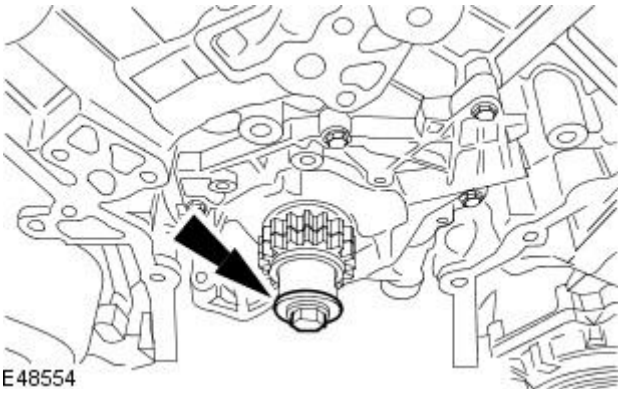

E48554

21. CAUTION: Make sure the crankshaft keyway is at the 9 O'clock position before any further engine repairs are carried out.

Remove the crankshaft pulley retaining bolt and washer.

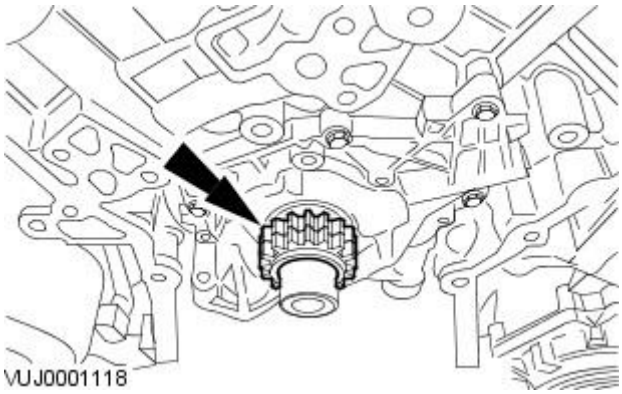

22. Remove the crankshaft sprocket.

Installation

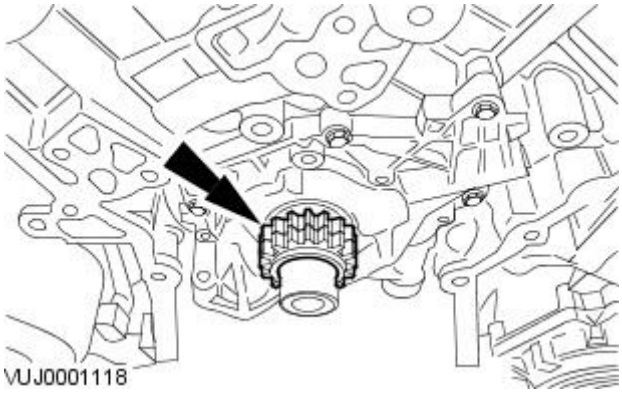

1. NOTE: Make sure the crankshaft sprocket timing marks are facing outwards.

Install the crankshaft sprocket.

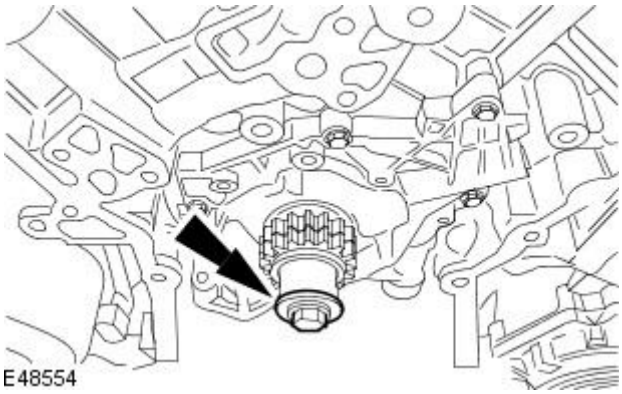

2. CAUTION: Make sure the crankshaft keyway is at the 9 O'clock position before the camshaft positions are aligned.

Install the crankshaft pulley retaining bolt and washer.

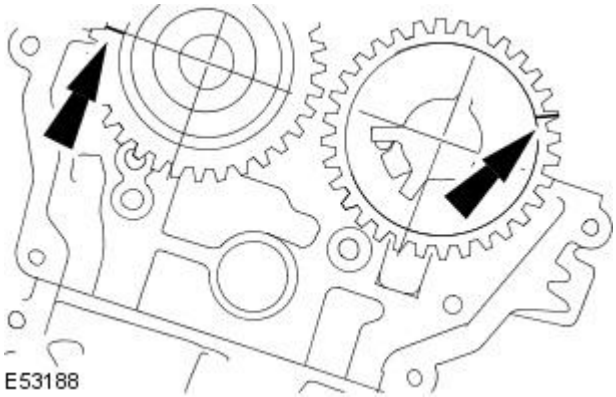

3. Rotate the left-hand intake camshaft clockwise until the camshaft sprocket alignment mark is at the 9 O'clock position and rotate the left-hand exhaust camshaft sprocket clockwise until the camshaft sprocket alignment mark is at the 2 O'clock position.

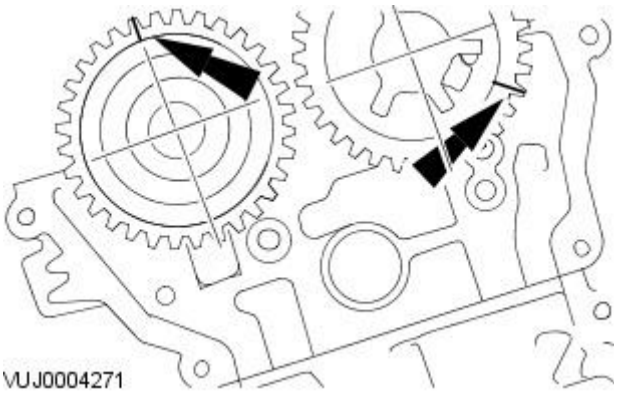

VUJ0004271

4. Rotate the right-hand intake camshaft clockwise until the camshaft sprocket alignment mark is at the 5 O'clock position and rotate the right-hand exhaust camshaft sprocket clockwise until the camshaft sprocket alignment mark is at the 12 O'clock position.

5. Rotate the crankshaft clockwise until the keyway is at the 11 O'clock position.

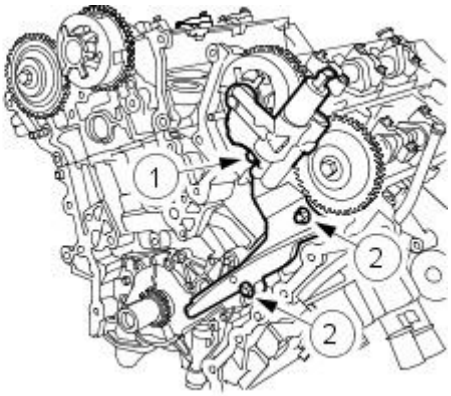

VUJ0003807

6. CAUTIONS:

Inspect and replace the O-ring seal if necessary.

Make sure the O-ring seal is correctly installed.

Install the left-hand timing chain outer guide.

- Tighten the retaining bolts in the sequence shown in two stages.
- Stage 1: Tighten bolt 1 to 25 Nm.
- Stage 2: Tighten bolts 2 to 25 Nm.

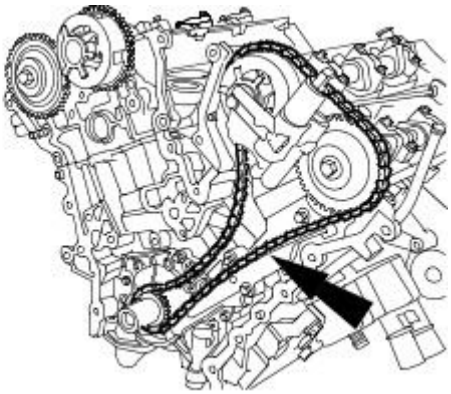

VUJ0003356

7. CAUTIONS:

Make sure the crankshaft keyway is at the 11 O'clock position, the alignment mark on the left-hand intake camshaft sprocket is at the 9 O'clock position and the alignment mark on the left-hand exhaust camshaft sprocket is at the 2 O'clock position.

Make sure the timing chain alignment marks are correctly positioned to the crankshaft sprocket and camshaft sprocket alignment marks.

Make sure the timing chain slack is on the tensioned side of the timing chain.

Install the left-hand timing chain.

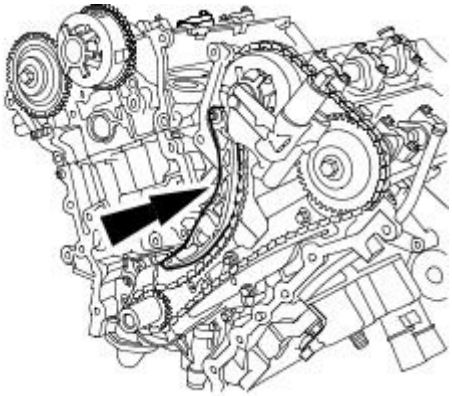

VUJ0003357

8. Install the left-hand timing chain inner guide.

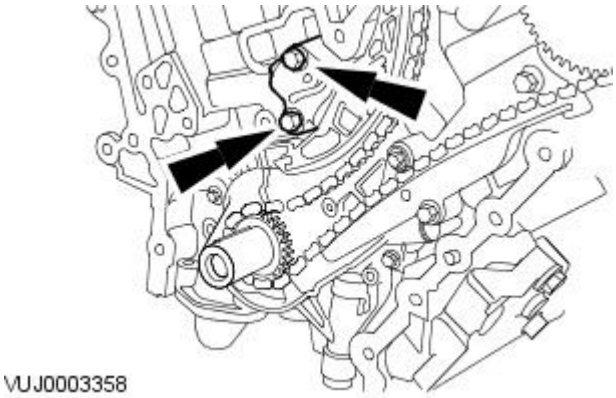

9. CAUTION: Do not manually adjust the timing chain tensioner.

Install the left-hand timing chain tensioner.

- Tighten to 25 Nm.

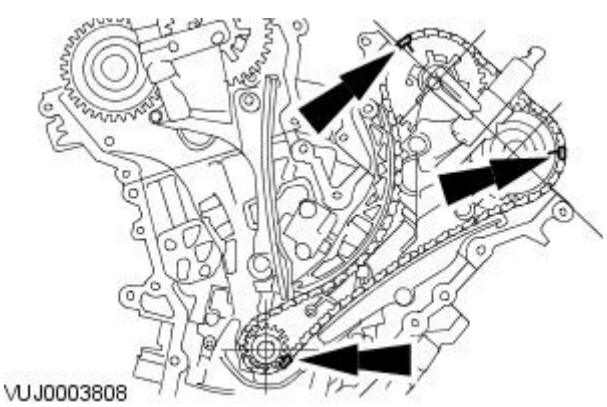

10. CAUTION: Do not manually adjust the timing chain tensioner.

Make sure the left-hand timing chain alignment marks have remained correctly positioned to the camshaft sprocket and crankshaft sprocket alignment marks.

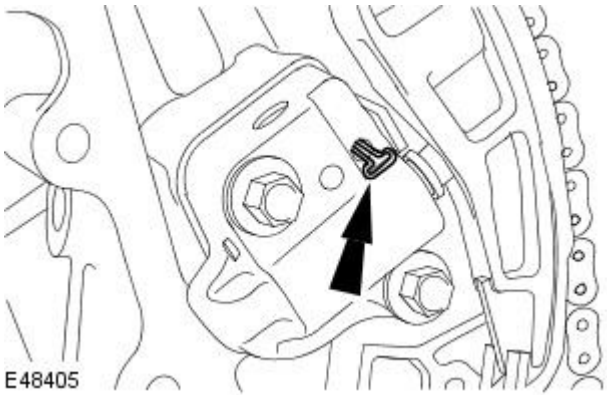

11. CAUTION: Do not manually adjust the timing chain tensioner.

Remove the timing chain tensioner retaining pin.

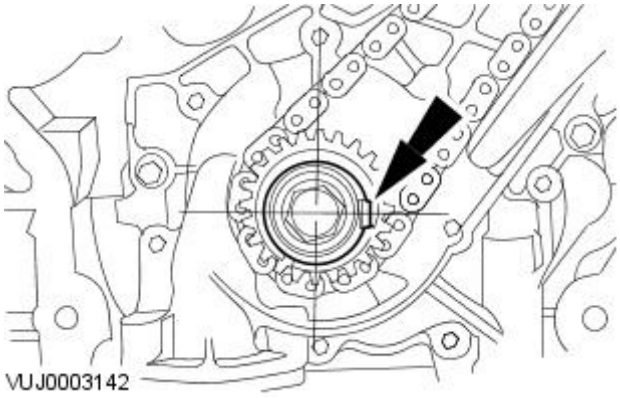

12. CAUTION: Do not rotate the crankshaft counterclockwise. The timing chains may bind causing engine damage.

Rotate the crankshaft clockwise until the crankshaft keyway is at the 3 O'clock position.

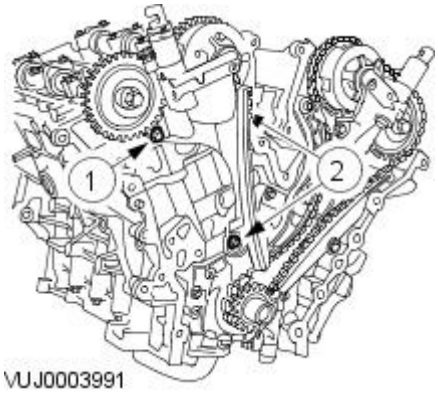

13. CAUTIONS:

Inspect and replace the O-ring seal if necessary.

Make sure the O-ring seal is correctly installed.

Install the right-hand timing chain inner guide.

- Tighten the retaining bolts in the sequence shown in two stages.
- Stage 1: Tighten bolt 1 to 25 Nm.
- Stage 2: Tighten bolts 2 to 25 Nm.

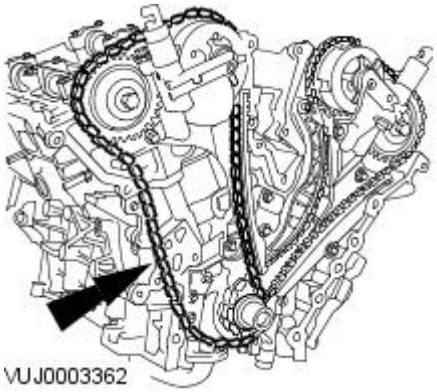

14. CAUTIONS:

Make sure the crankshaft keyway is at the 3 O'clock position, the alignment mark on the right-hand intake camshaft sprocket is at the 5 O'clock position and the alignment mark on the right-hand exhaust camshaft sprocket is at the 12 O'clock position.

Make sure the timing chain alignment marks are correctly positioned to the crankshaft sprocket and camshaft sprocket alignment marks.

Make sure the timing chain slack is on the tensioned side of the timing chain.

Install the right-hand timing chain.

15. Install the right-hand timing chain outer guide.

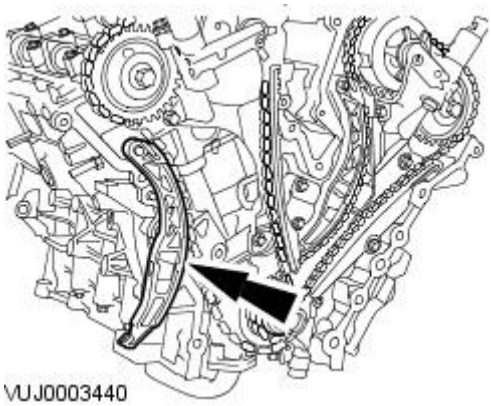

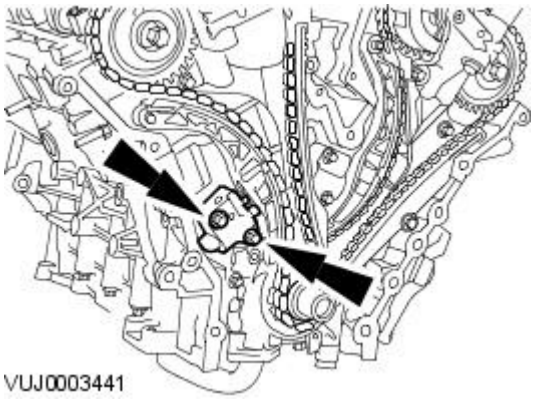

16. CAUTION: Do not manually adjust the timing chain tensioner.

Install the right-hand timing chain tensioner.

- Tighten to 25 Nm.

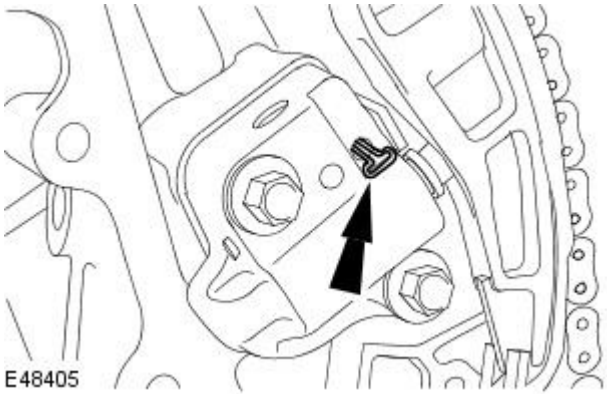

17. CAUTION: Do not manually adjust the timing chain tensioner.

Remove the timing chain tensioner retaining pin.

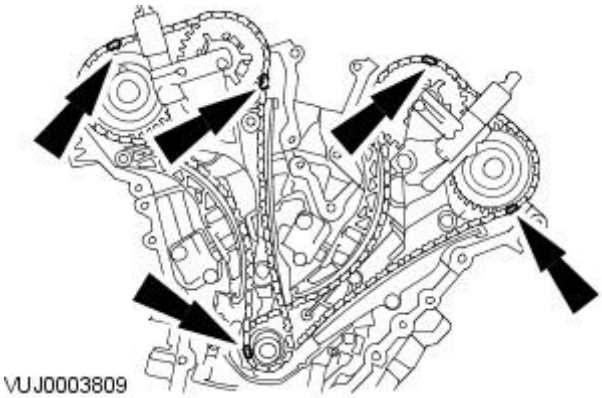

18. CAUTIONS:

Make sure the right-hand timing chain alignment marks have remained correctly positioned to the camshaft sprocket and crankshaft sprocket alignment marks.

Do not manually adjust the timing chain tensioner.

Make sure all the timing chain alignment marks are in the positions shown.

19. CAUTION: Do not rotate the crankshaft counterclockwise. The timing chains may bind causing engine damage.

• NOTE: Rotate the crankshaft using hand tools only

Rotate the crankshaft two complete turns clockwise to make sure the valves and pistons do not clash.

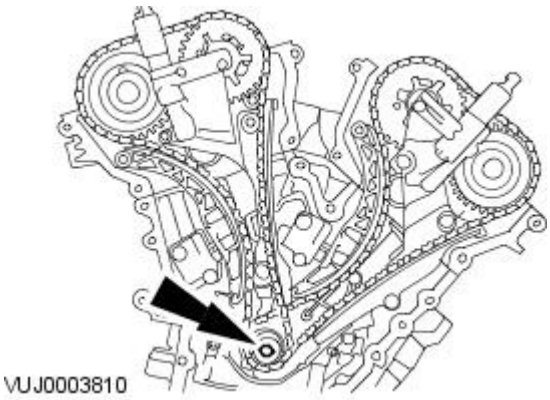

20. CAUTION: Do not rotate the crankshaft counterclockwise. The timing chains may bind causing engine damage.

Remove the crankshaft pulley retaining bolt and washer.

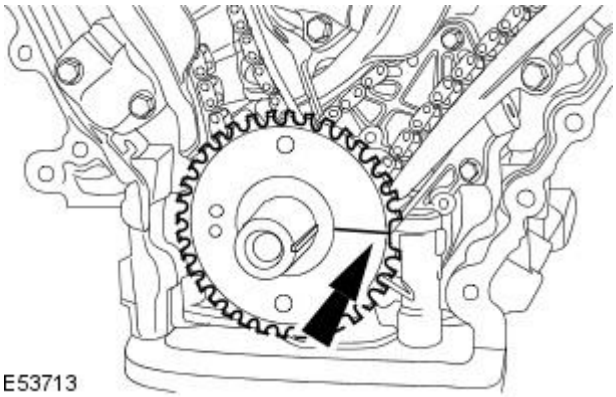

21. CAUTIONS:

Make sure the CKP sensor pulse wheel is correctly installed with the missing tooth aligned to the crankshaft keyway.

Make sure the CKP sensor pulse wheel is correctly installed with the teeth pointing outwards.

Install the CKP sensor pulse wheel.

22. Install the spark plugs.

- Tighten to 15 Nm.

23. Install the engine front cover.
For additional information, refer to: Engine Front Cover (303-01A Engine - 2.0L NA V6 - AJV6/2.5L NA V6 - AJV6/3.0L NA V6 - AJ27, In-vehicle Repair).

Engine - 2.0L NA V6 - AJV6 / 2.5L NA V6 - AJV6 / 3.0L NA V6 - AJ27 - Valve Cover LH

In-vehicle Repair

Removal

All vehicles

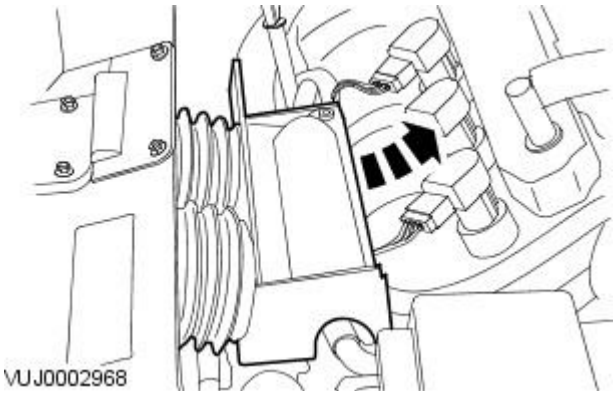

1. Remove the ignition coils. For additional information, refer to Section 303-07A Engine IgnitionSection 303-07B Glow Plug System.
2. Remove the air filter intake pipe.
   - 2.5 and 3.0L shown, 2.0L similar.

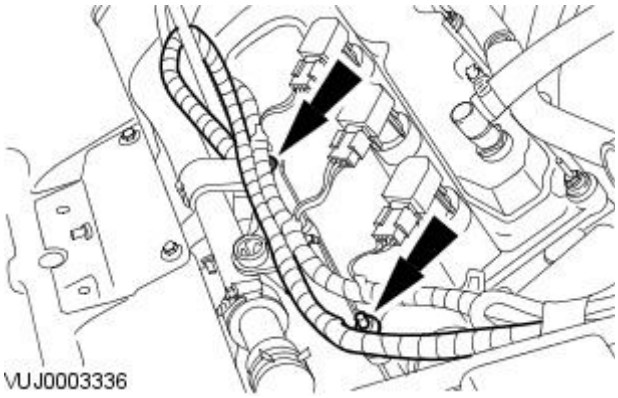

3. Detach the wiring harness.
   - 2.5 and 3.0L shown, 2.0L similar.

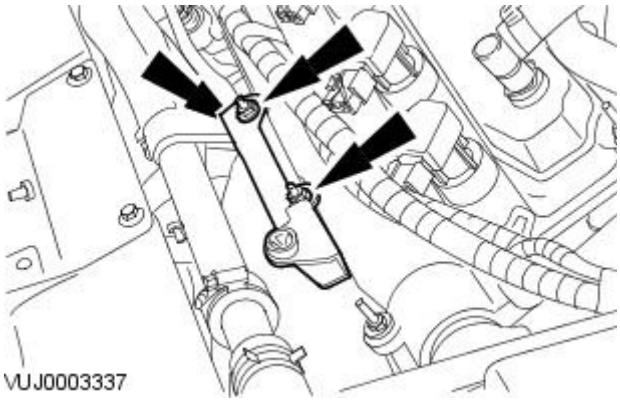

4. Remove the air filter retaining bracket.
   - 2.5 and 3.0L shown, 2.0L similar.

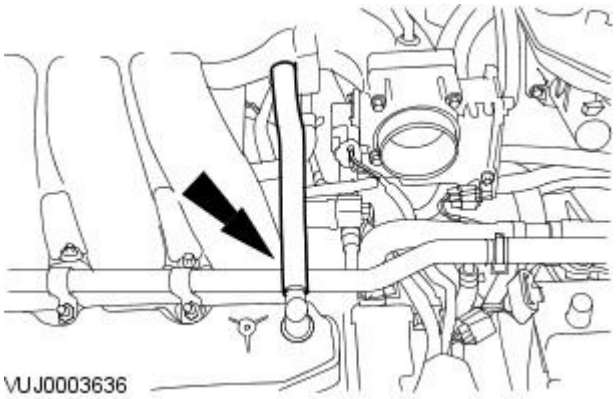

5. Detach the positive crank case ventilation hose.
   - 2.5 and 3.0L shown, 2.0L similar.

Vehicles with 2.0L engine

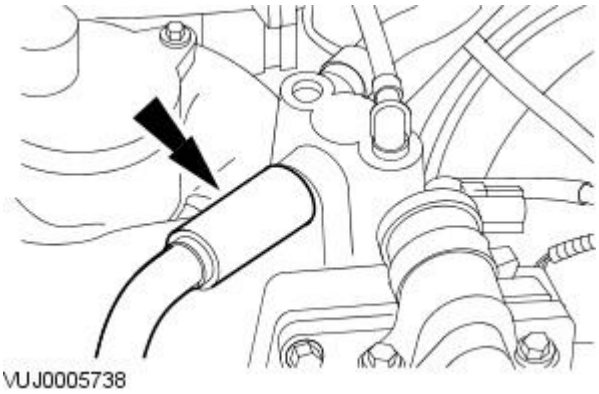

6. Detach the positive crank case ventilation hose.

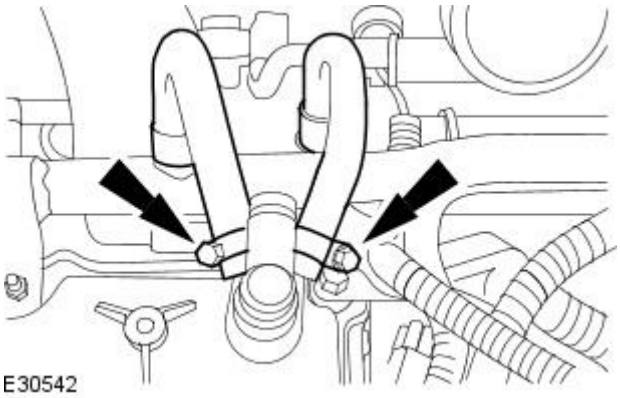

7. Detach the heated positive crankcase ventilation valve coolant pipes.

All vehicles

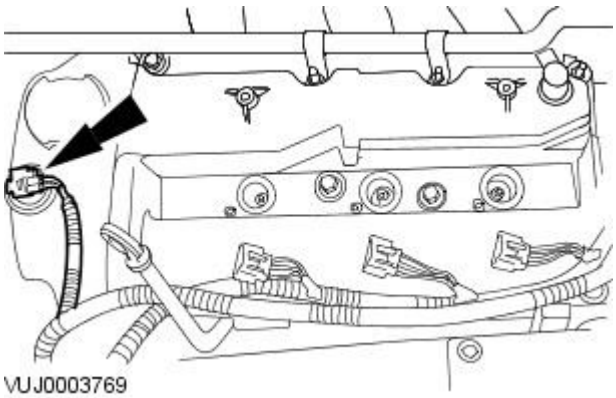

8. Disconnect the variable camshaft timing (VCT) solenoid electrical connector.

- 2.5 and 3.0L shown, 2.0L similar.

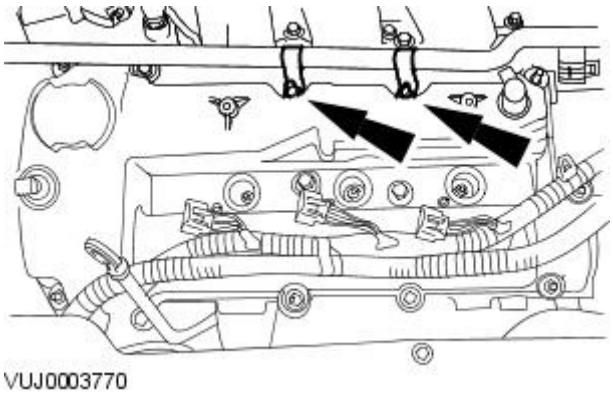

9. Detach the coolant hose.

- 2.5 and 3.0L shown, 2.0L similar.

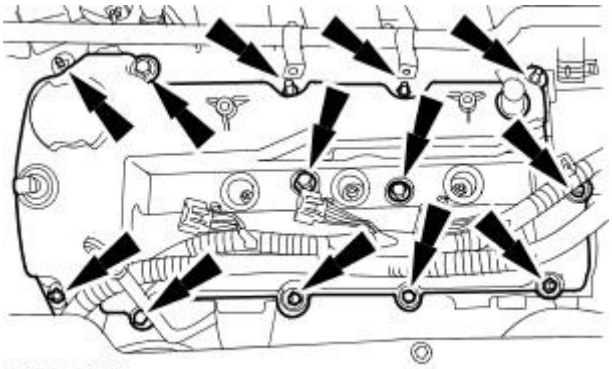

VUJ0003771

10. Remove the valve cover.

- Remove and discard the valve cover gaskets.
  1. 2.5 and 3.0L shown, 2.0L similar.

Installation

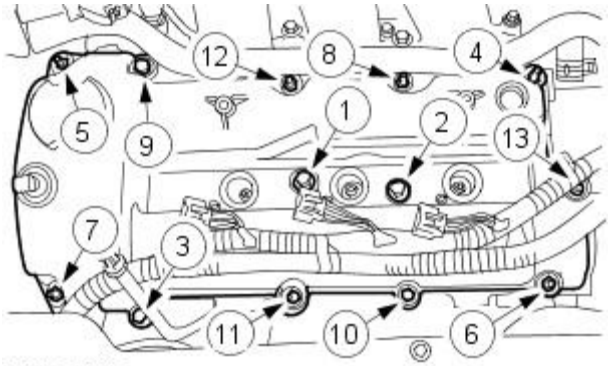

VUJ0003772

1. NOTE: Apply a 5 mm diameter bead of silicone gasket sealant WSE-M4G323-A6 or equivalent meeting Jaguar specification on the half round gaskets, apply an 8 mm diameter bead of silicone gasket sealant on the two places where the cylinder head and front timing cover join and the twe places wherethe cylindar head and the water pump join.

• NOTE: Make sure that the valve cover isolator mounts are correctly installed to the new valve cover gaskets.

To install, reverse the removal procedure.

- Install the new valve cover gaskets.
- Complete the tightening sequence.
- Tighten to 10 Nm.
  1. 2.5 and 3.0L shown, 2.0L similar.

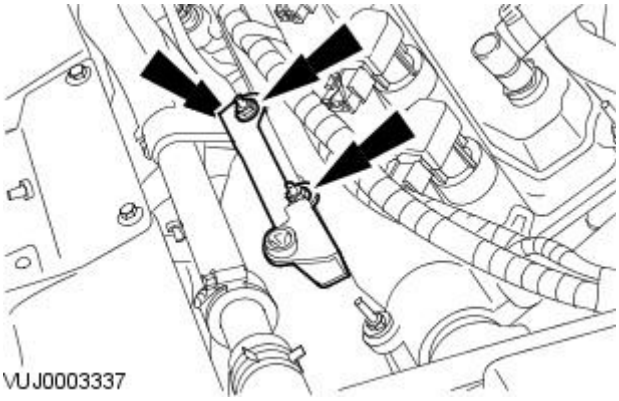

VUJ0003337

2. Tighten to 6 Nm.

- 2.5 and 3.0L shown, 2.0L similar.

Engine - 2.0L NA V6 - AJV6 / 2.5L NA V6 - AJV6 / 3.0L NA V6 - AJ27 - Valve Cover RH

In-vehicle Repair

Removal

1. Remove the ignition coils. For additional information, refer toSection 303-07A Engine IgnitionSection 303-07B Glow Plug System.
2. Detach the wiring harness.

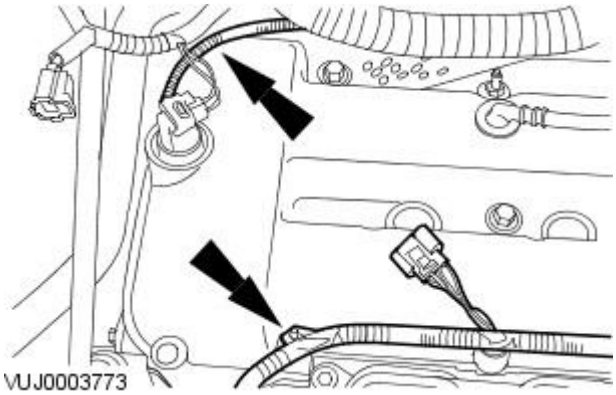

3. Disconnect the variable camshaft timing (VCT) solenoid electrical connector.

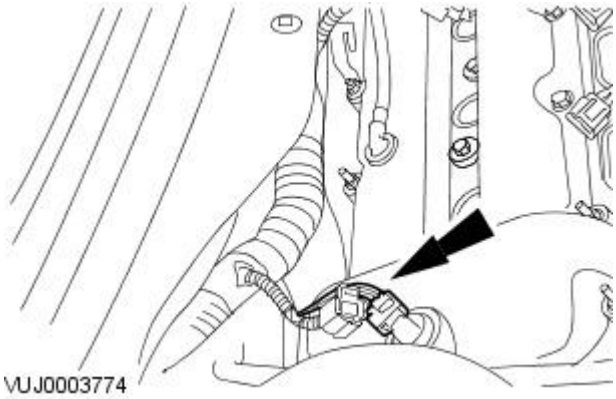

4. Remove the engine cover retaining bracket.

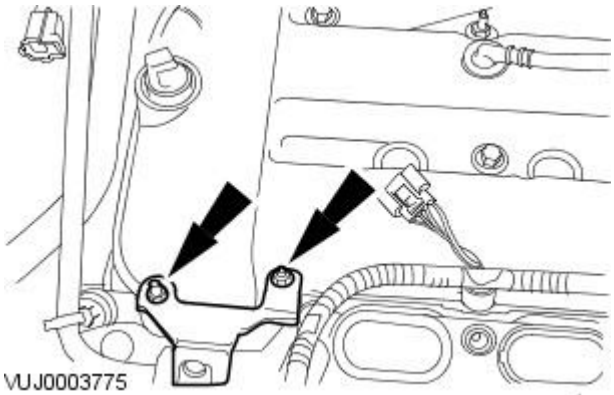

5. Remove the intake manifold support bracket.

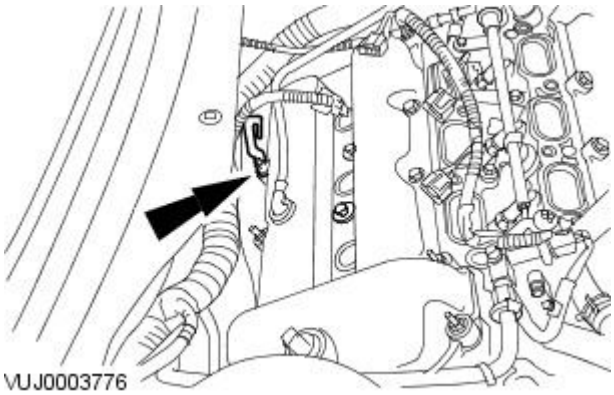

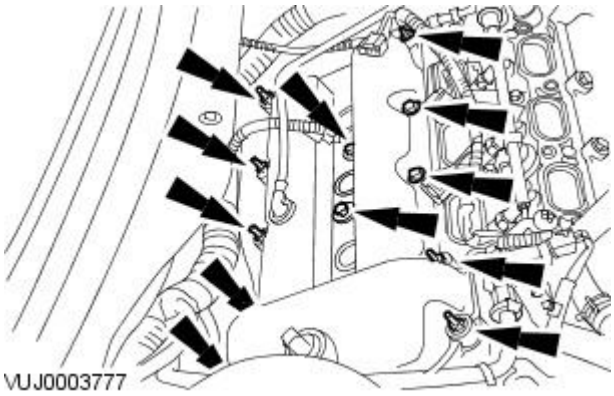

6. Remove the valve cover.

- Remove and discard the valve cover gaskets.

Installation

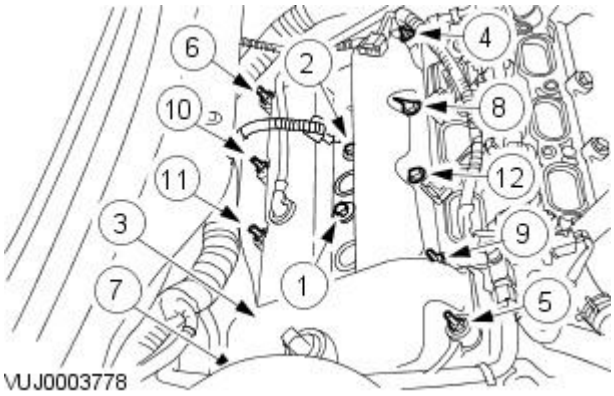

1. NOTE: Apply a 5 mm diameter bead of silicone gasket sealant WSE-M4G323-A6 or equivalent meeting Jaguar specification on the half round gaskets and apply an 8 mm diameter bead of silicone gasket sealant on the two places where the cylinder head and front timing cover join.

• NOTE: Make sure that the valve cover isolator mounts are correctly installed to the new valve cover gaskets.

To install, reverse the removal procedure.

- Install the new valve cover gaskets.
- Complete the tightening sequence.
- Tighten to 10 Nm.

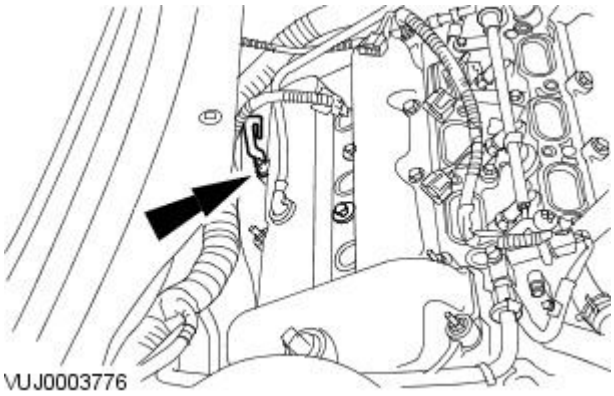

2. Tighten to 6 Nm.

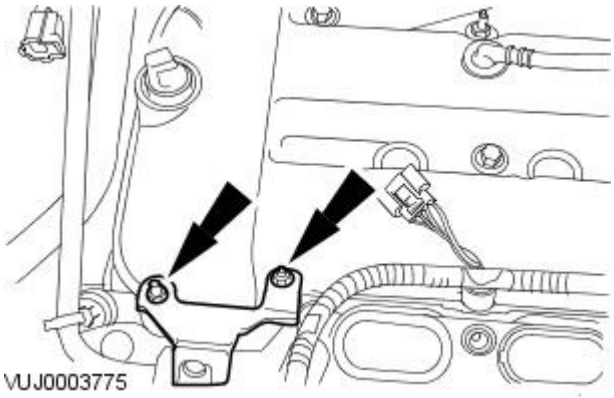

3. Tighten to 6 Nm.

Engine - 2.0L NA V6 - AJV6 / 2.5L NA V6 - AJV6 / 3.0L NA V6 - AJ27 - EngineVehicles With: 5-Speed Manual Transmission - MT75 / 6-Speed Manual Transaxle - MMT6

Removal

Special Tool(s)	
HTJ12002	Powertrain Assembly Jack HTJ1200-2
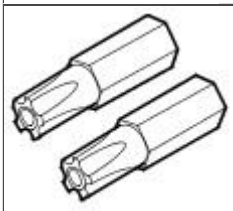 418-535	5 Point Security Torx Bit 418-535
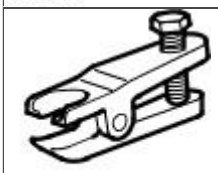 204-192	Ball joint splitter 204-192
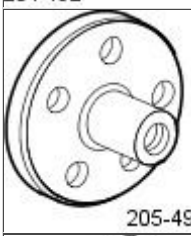 205-491	Wheel hub puller 205-491
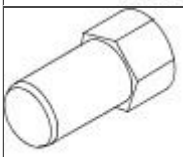 20549101	Adaptor nuts 205-491-01
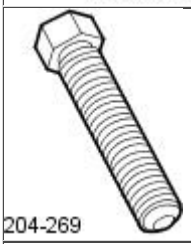 204-269	Forcing screw 204-269
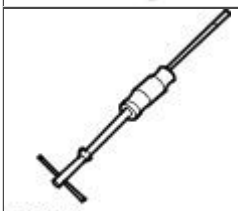 100012	Slide hammer 100-012
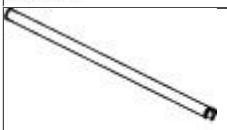 100-012-02	Slide hammer shaft 100-012-02
204-226	Halfshaft remover fork 204-226

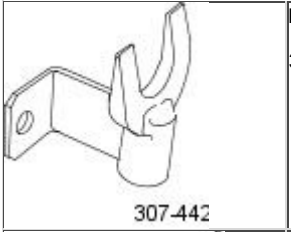	Right-hand halfshaft splitter 307-442
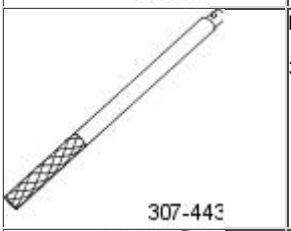	Right-hand halfshaft splitter handle 307-443
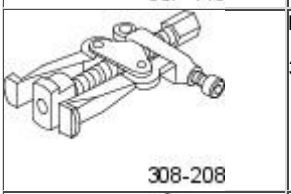	Pinion oil seal remover 308-208
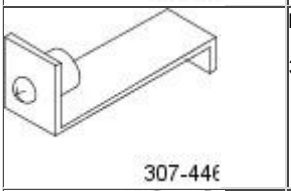	Link shaft limiting tool 307-446
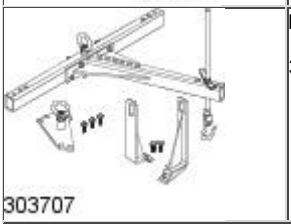	Engine lifting kit 303-707

Removal

All vehicles

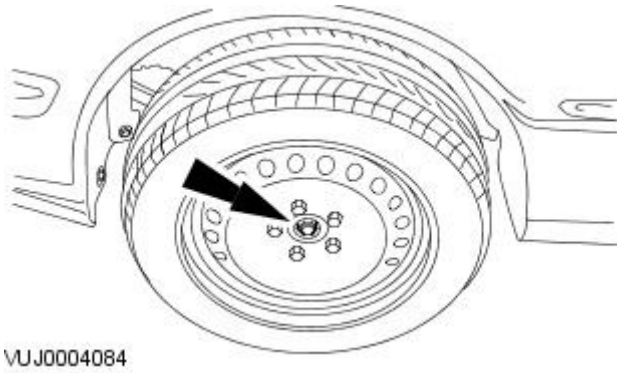

1. NOTE: Left-hand shown, right-hand similar.

Loosen the front hub retaining nuts.

2. Drain the transaxle.
For additional information, refer to: Transaxle Draining and Filling - Vehicles With: 6-Speed Manual Transaxle - MMT6 (308-03 Manual Transmission/Transaxle, General Procedures).

3. Remove the steering column lower retaining bolt.

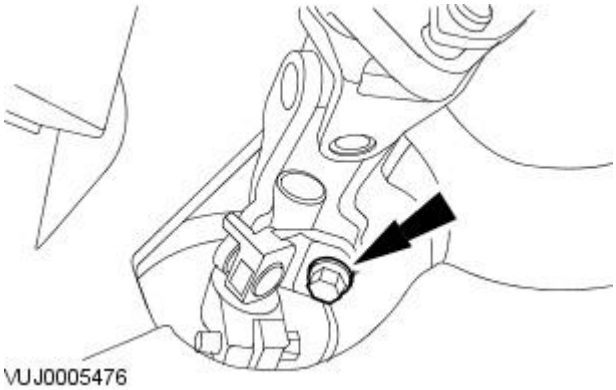

4. Remove the battery tray.
For additional information, refer to: Battery Tray (414-01 Battery, Mounting and Cables, Removal and Installation).

5. Recover the air conditioning (A/C) refrigerant.

For additional information, refer to: Air Conditioning (A/C) System Recovery, Evacuation and Charging (412-00 Climate Control System - General Information, General Procedures).

6. Remove the front wheels and tires.
For additional information, refer to: Wheel and Tire (204-04 Wheels and Tires, Removal and Installation).

7. Drain the cooling system.
For additional information, refer to: Cooling System Draining, Filling and Bleeding (303-03A Engine Cooling - 2.0L NA V6 - AJV6/2.5L NA V6 - AJV6/3.0L NA V6 - AJ27, General Procedures).

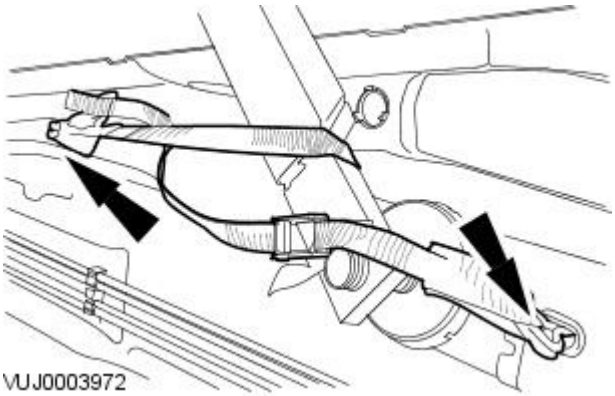

8. CAUTION: To prevent the vehicle becoming unstable when the engine and transmission assembly are removed, install the vehicle tie down straps.

• NOTE: Right-hand shown, left-hand similar.

Install the front vehicle tie down strap.

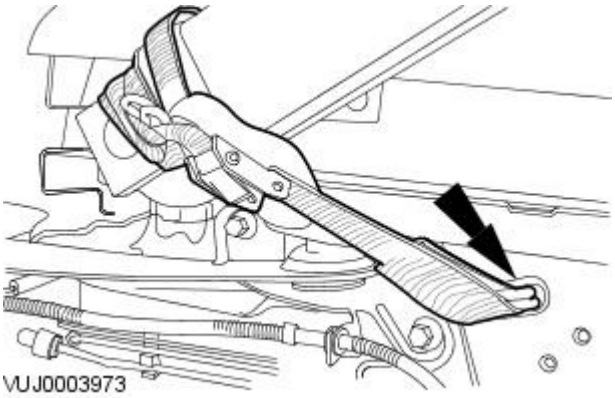

9. CAUTION: To prevent the vehicle becoming unstable when the engine and transmission assembly are removed, install the vehicle tie down straps.

• NOTE: Right-hand shown, left-hand similar.

Install the rear vehicle tie down strap.

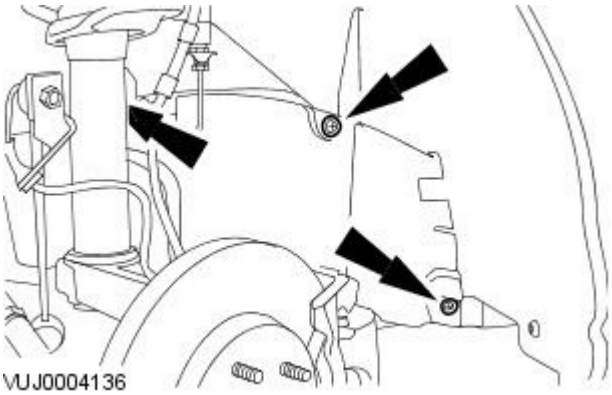

10. NOTE: Right-hand shown, left-hand similar.

Remove the splash shield.

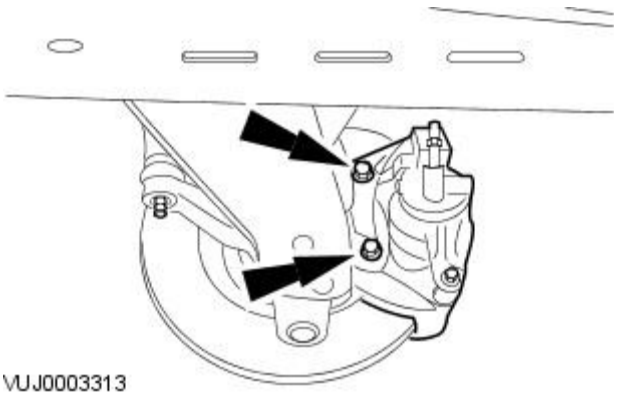

11. NOTE: Left-hand shown, right-hand similar.

Detach the brake caliper assembly.

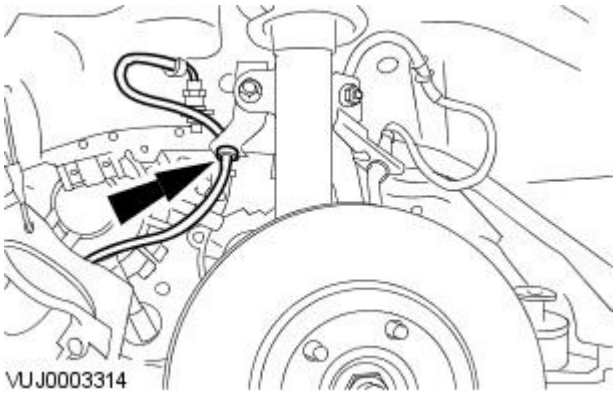

12. NOTE: Left-hand shown, right-hand similar.

Detach the brake pipe.

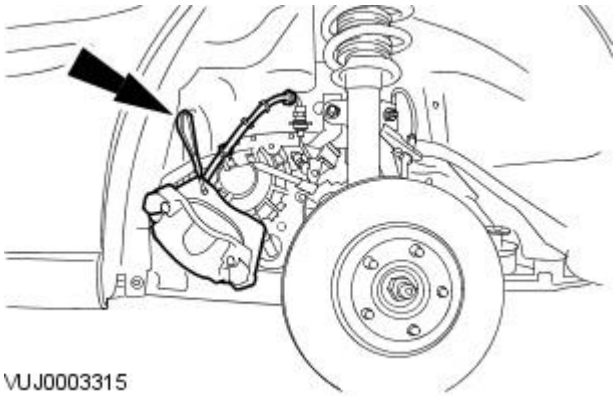

13. NOTE: Support the brake caliper assembly using tie straps.

- NOTE: Left-hand shown, right-hand similar.

Reposition and secure the brake caliper assembly.

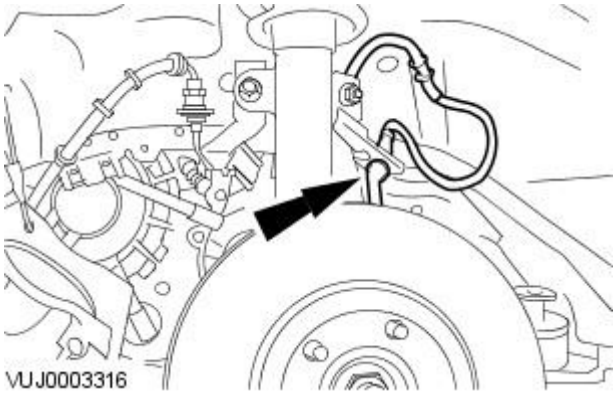

14. NOTE: Left-hand shown, right-hand similar.

Detach the anti-lock braking system (ABS) wheel speed sensor.

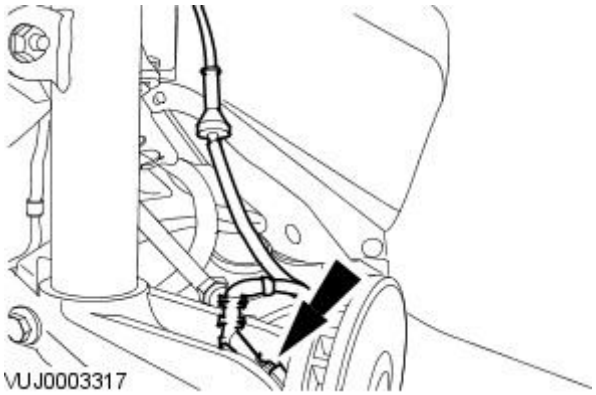

15. NOTE: Left-hand shown, right-hand similar.

Disconnect the ABS wheel speed sensor.

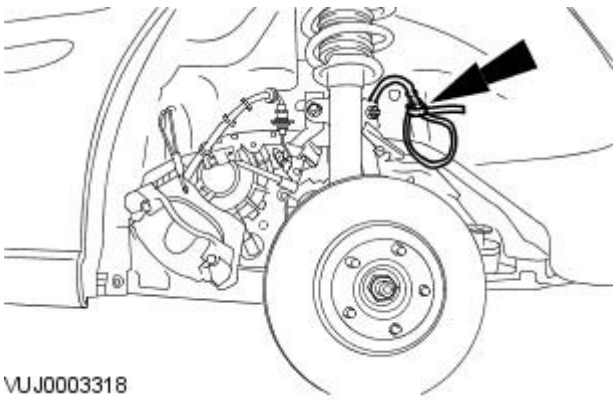

16. NOTE: Secure the ABS wheel speed sensor using tie straps.

- NOTE: Left-hand shown, right-hand similar.

Reposition and secure the ABS wheel speed sensor.

17. Remove the cooling fan motor and shroud.
For additional information, refer to: Cooling Fan Motor and Shroud (303-03A Engine Cooling - 2.0L NA V6 - AJV6/2.5L NA V6 - AJV6/3.0L NA V6 - AJ27, Removal and Installation).

Vehicles with 2.5L or 3.0L engine

18. Remove the driveshaft.
For additional information, refer to: Driveshaft (205-01 Driveshaft, Removal and Installation).

All vehicles

19. Remove the front muffler.
For additional information, refer to: Front Muffler - 2.0L NA V6 - AJV6/2.5L NA V6 - AJV6/3.0L NA V6 - AJ27 (309-00 Exhaust System, Removal and Installation).

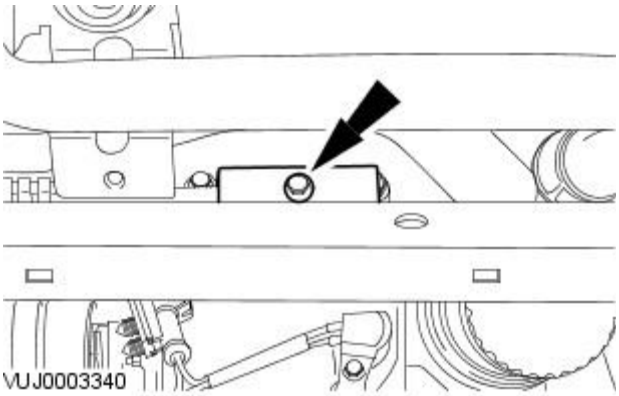

20. NOTE: Using a suitable blanking plug, seal the tube and the A/C compressor.

• NOTE: Secure the A/C compressor supply and return tubes using tie straps.

Detach the A/C compressor supply and return tubes.

- Remove and discard the O-ring seals.

21. Detach the coolant hose.

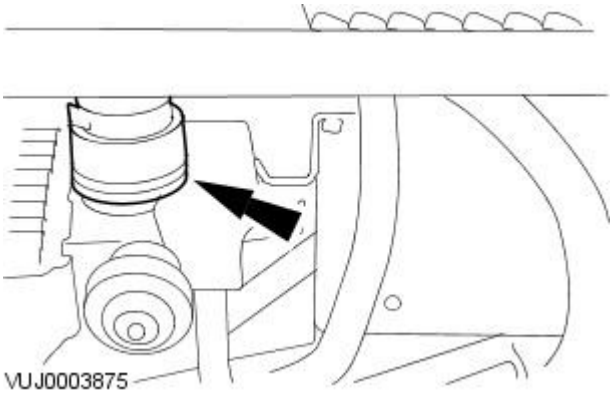

22. Lower the vehicle.

23. Remove the air cleaner.
For additional information, refer to: Air Cleaner (303-12A Intake Air Distribution and Filtering - 2.0L NA V6 - AJV6/2.5L NA V6 - AJV6/3.0L NA V6 - AJ27, Removal and Installation).

24. Remove the air filter intake pipe.

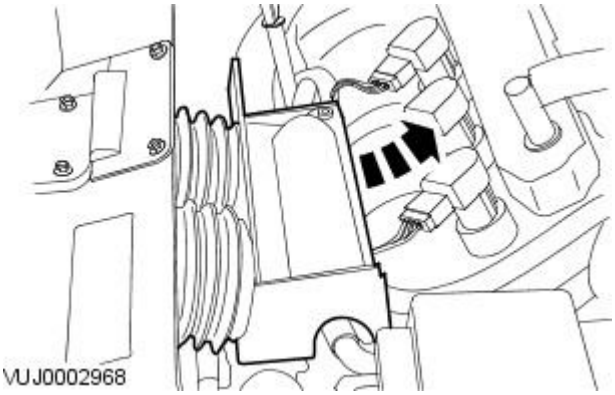

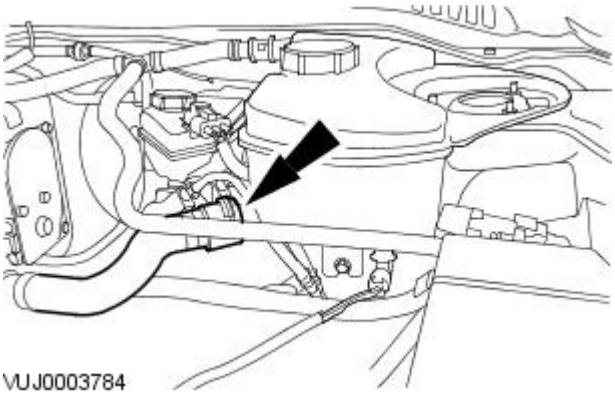

25. Detach the coolant hose.

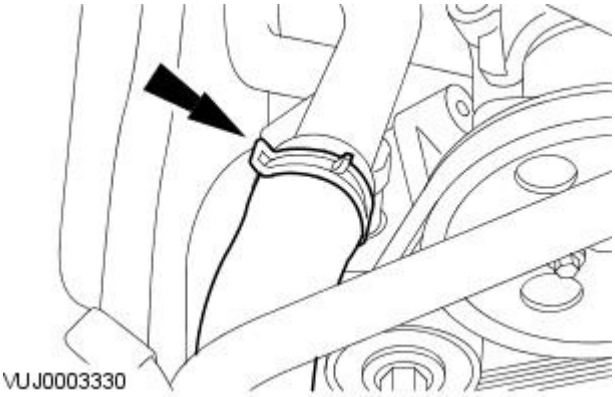

26. Detach the coolant hose.

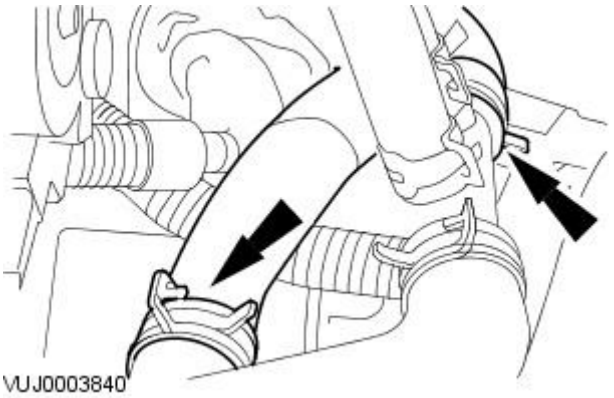

27. Detach the coolant hoses.

Vehicles with 2.0L engine

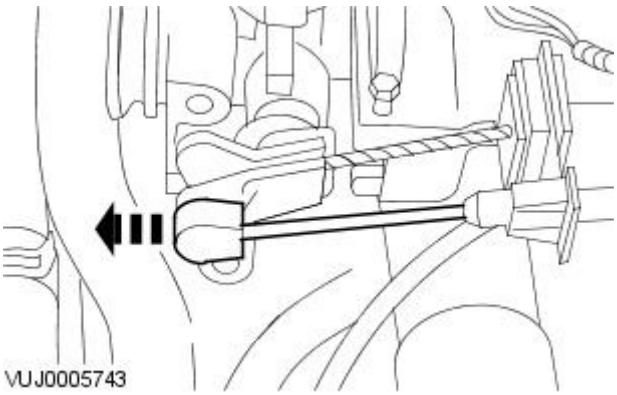

28. Detach the cruise control cable.

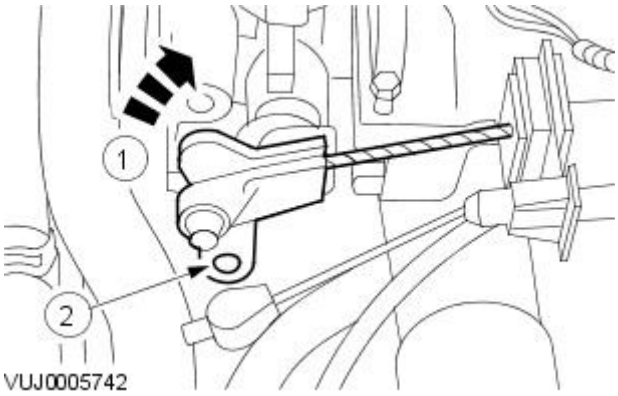

29. Detach the accelerator cable.

1. Reposition the accelerator lever to the fully open position.
2. Detach the accelerator cable.

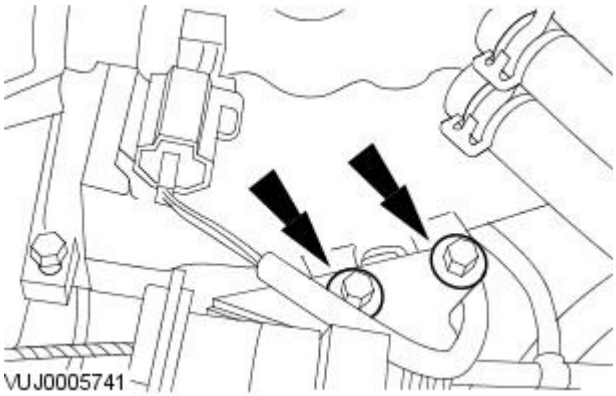

30. Detach the accelerator cable retaining bracket.

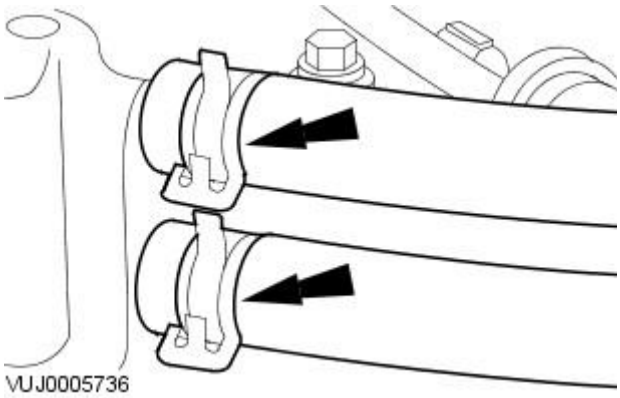

31. Detach the coolant hoses.

All vehicles

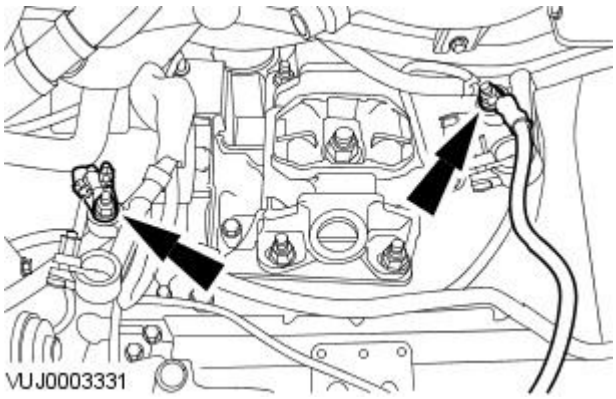

32. Detach the battery cables.

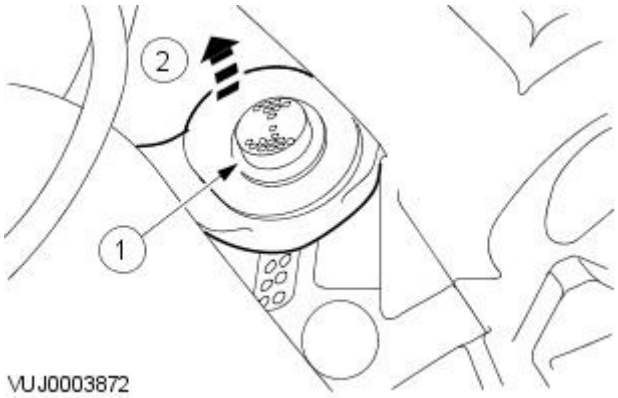

33. NOTE: Upper selector cable shown, lower selector cable similar.

Detach the selector cables.

1. Press the button.
2. Detach the selector cables.

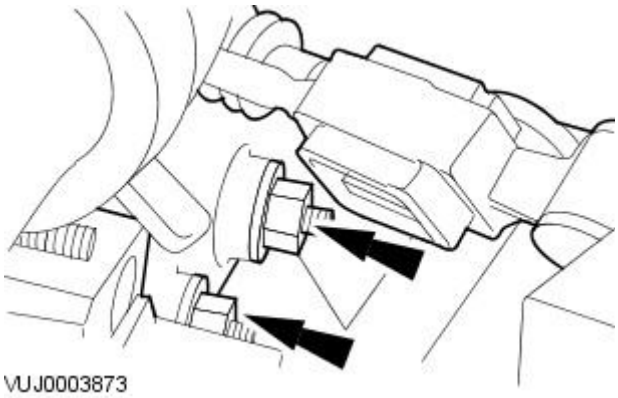

34. NOTE: Secure the selector cables using tie straps.

Detach the selector cables.

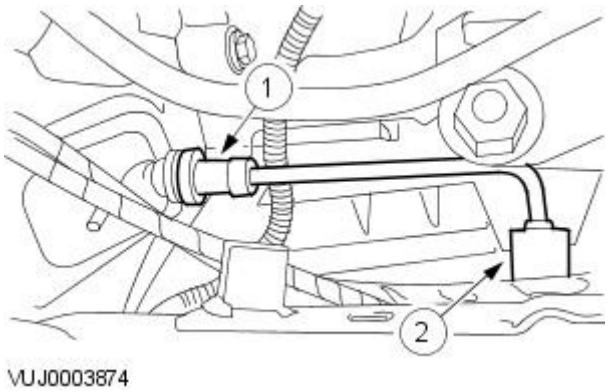

35. CAUTION: If brake fluid is spilt on the paintwork, the affected area must be immediately washed down with cold water.

- NOTE: Drain the fluid into a suitable container.
- NOTE: Using a suitable blanking plug, seal the pipe and the slave cylinder.
- NOTE: Secure the clutch slave cylinder pipe using tie straps.

Disconnect the clutch slave cylinder pipe and secure to one side.

1. Detach the clutch slave cylinder pipe from the slave cylinder.
2. Detach the clutch cylinder from the retaining bracket.

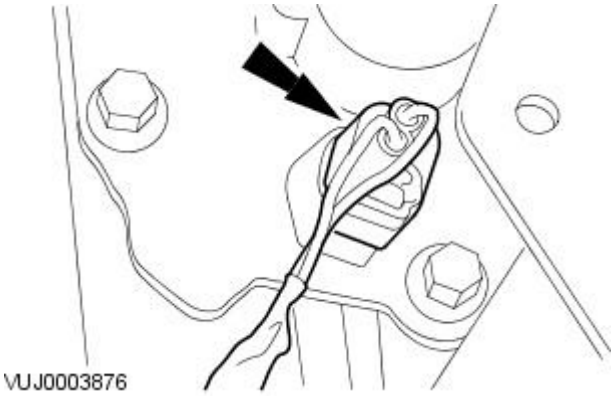

36. Disconnect the reverse light switch electrical connector.

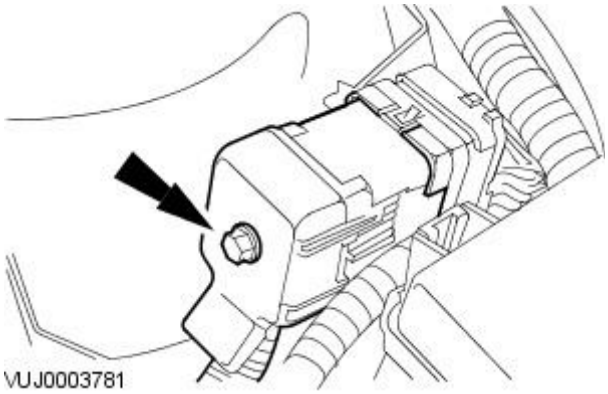

37. Disconnect the engine harness electrical connector.

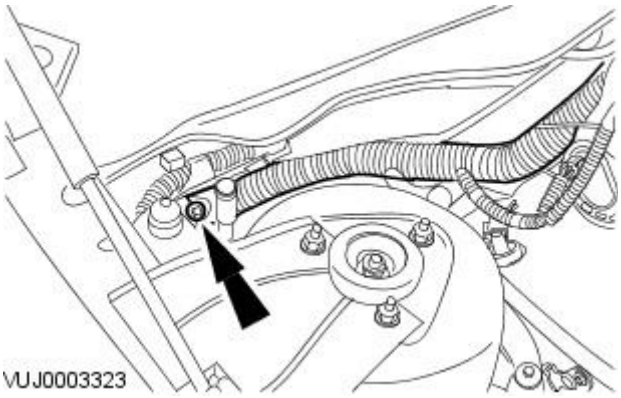

38. Using special tool 418-535, disconnect the engine control module (ECM) electrical connector.

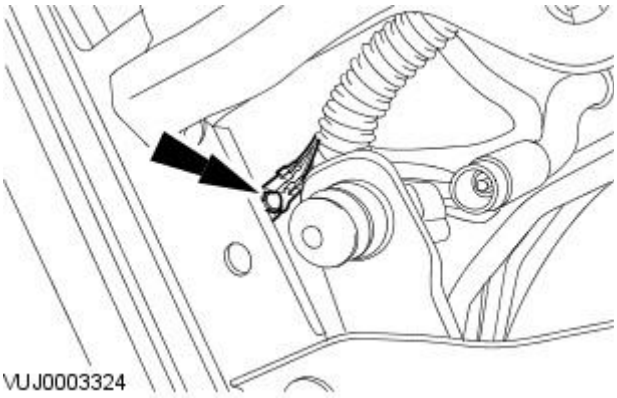

39. Disconnect the ground cable.

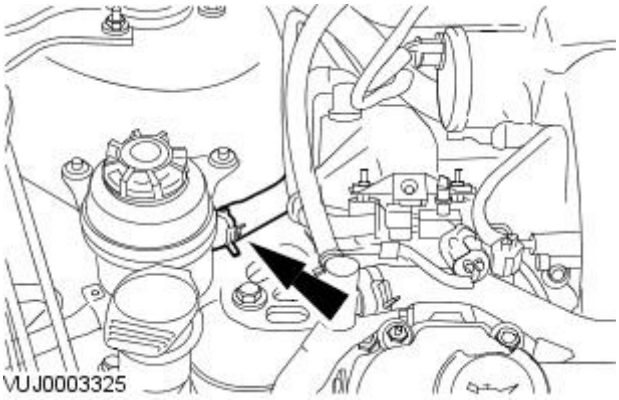

40. NOTE: Drain the fluid into a suitable container.

- NOTE: Use a suitable blanking plug to seal the hose.

Detach the power steering hose.

41. Disconnect the spring lock coupling.
For additional information, refer to: Spring Lock Couplings (310-00 Fuel System - General Information, General Procedures).

42. Detach the coolant pipe.

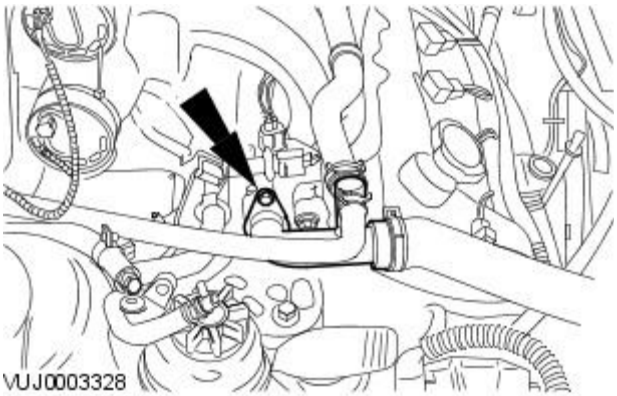

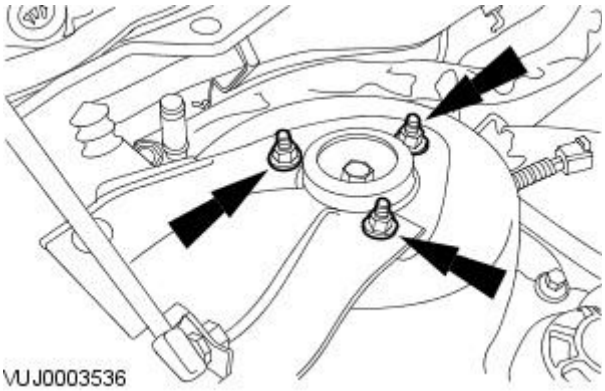

43. NOTE: Right-hand shown, left-hand similar.

Detach the strut and spring assembly.

44. Raise the vehicle.

45. Install the special tool.

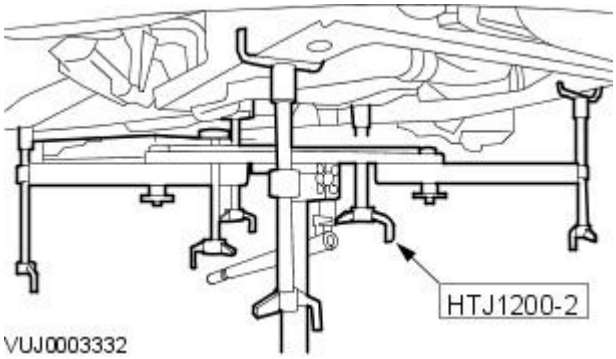

46. NOTE: Left-hand shown, right-hand similar.

Position and adjust the special tool rear height adjuster.

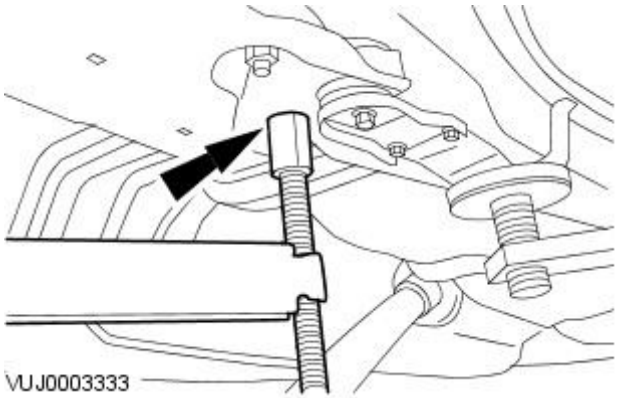

47. NOTE: Right-hand shown, left-hand similar.

Position and adjust the special tool front height adjuster.

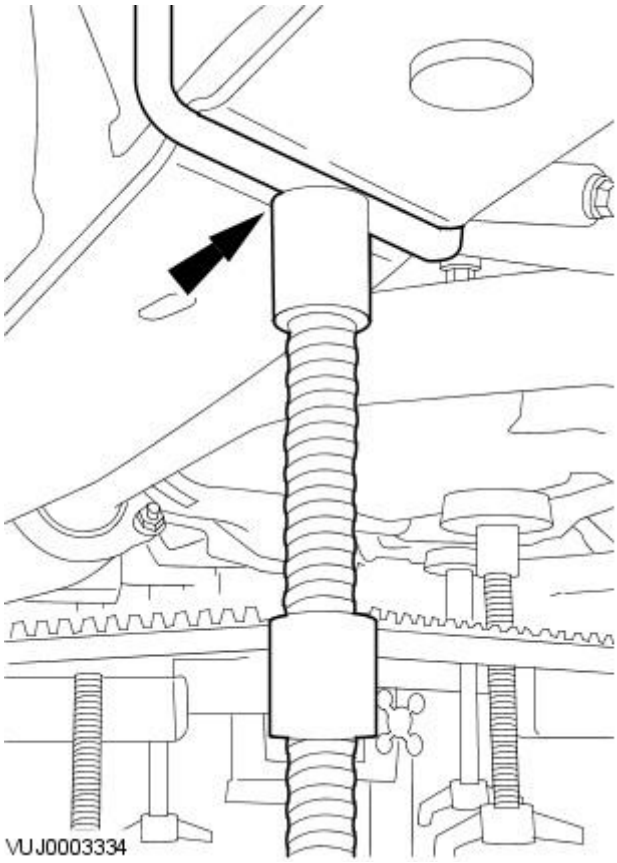

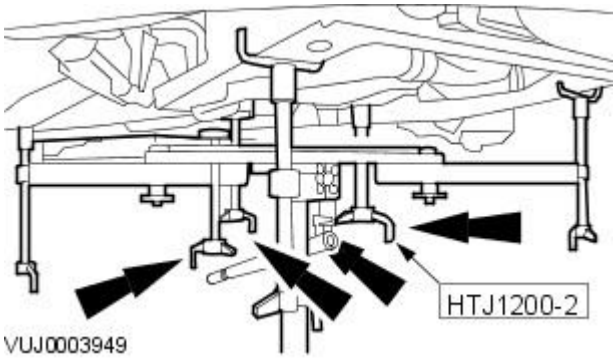

48. Position and adjust the special tool engine height adjusters.

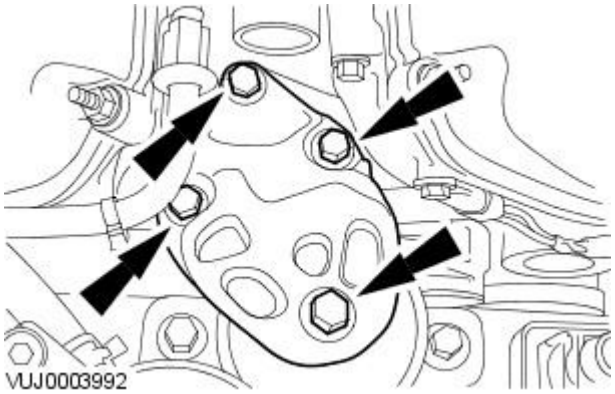

49. Remove the engine support bracket.

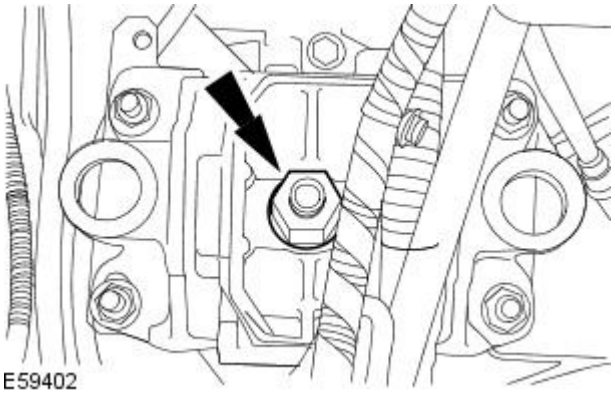

50. Remove the transaxle mount bracket securing nut.

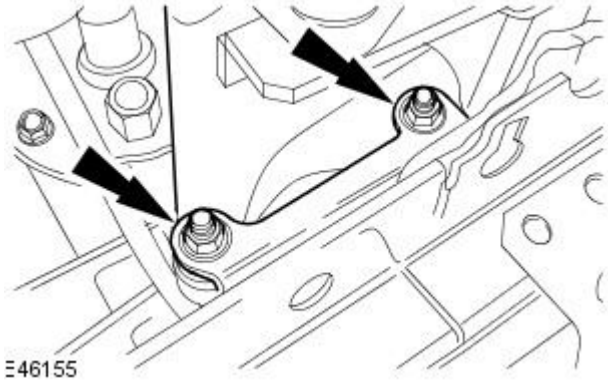

51. Remove the clutch master cylinder to clutch slave cylinder high-pressure pipe support bracket.

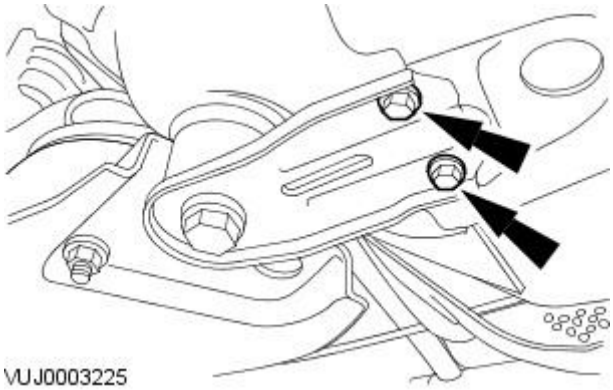

52. NOTE: Left-hand shown, right-hand similar.

Remove the front subframe reinforcement plate retaining bolts.

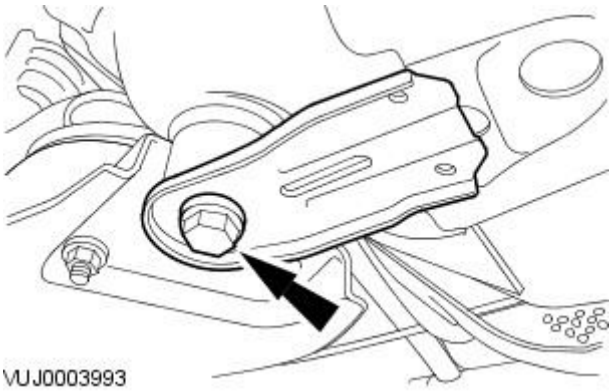

53. NOTE: Left-hand shown, right-hand similar.

Remove the front subframe reinforcement plate.

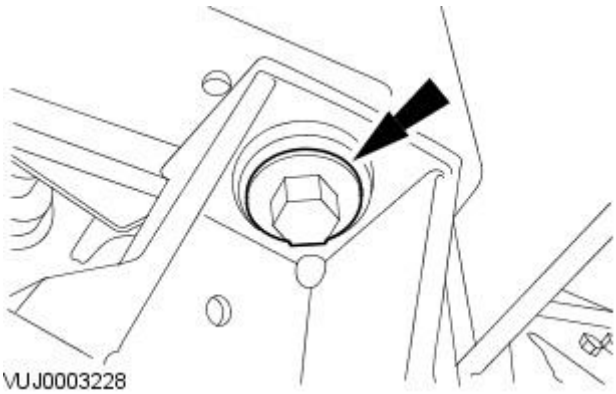

54. NOTE: Left-hand shown, right-hand similar.

Detach the front subframe.

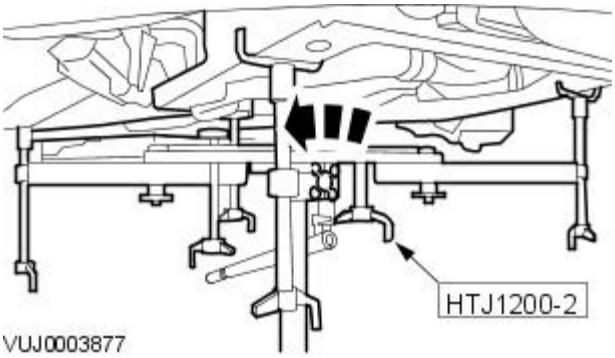

55. WARNING: Rotate the special tool height adjustment valve slowly. Failure to follow this instruction may result in personal injury.

Remove the engine and transaxle assembly.

- Rotate the special tool height adjustment valve counter clockwise.

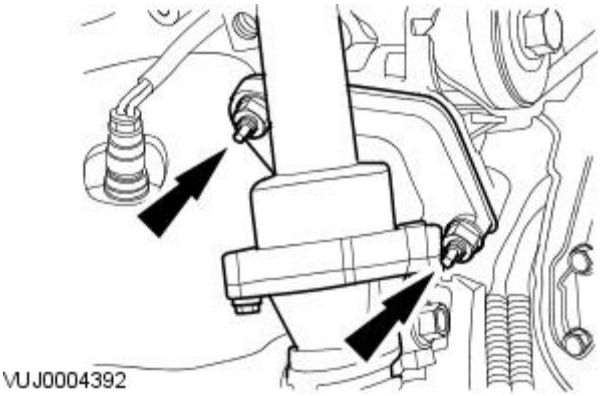

56. Remove the coolant system top hose.

- Remove and discard the gasket.

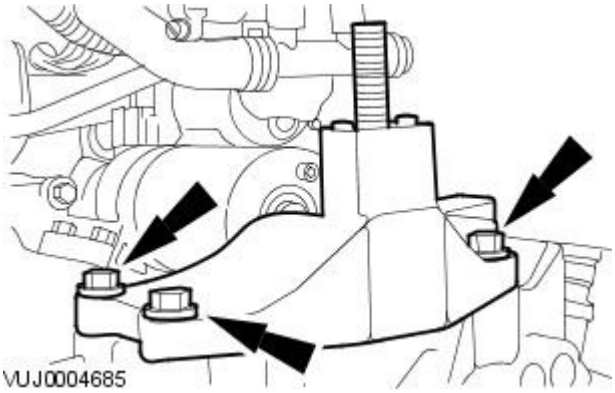

57. Remove the transaxle mount.

58. Install the special tool.

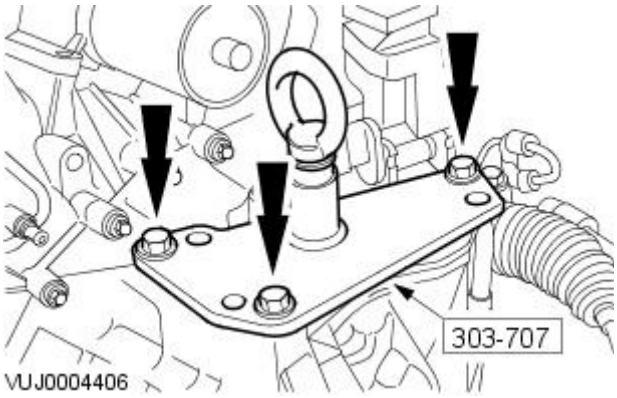

59. Remove the left-hand exhaust manifold heat shield.

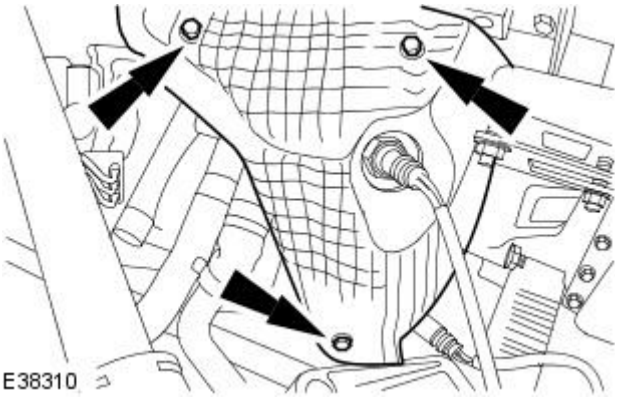

60. Install the special tool.

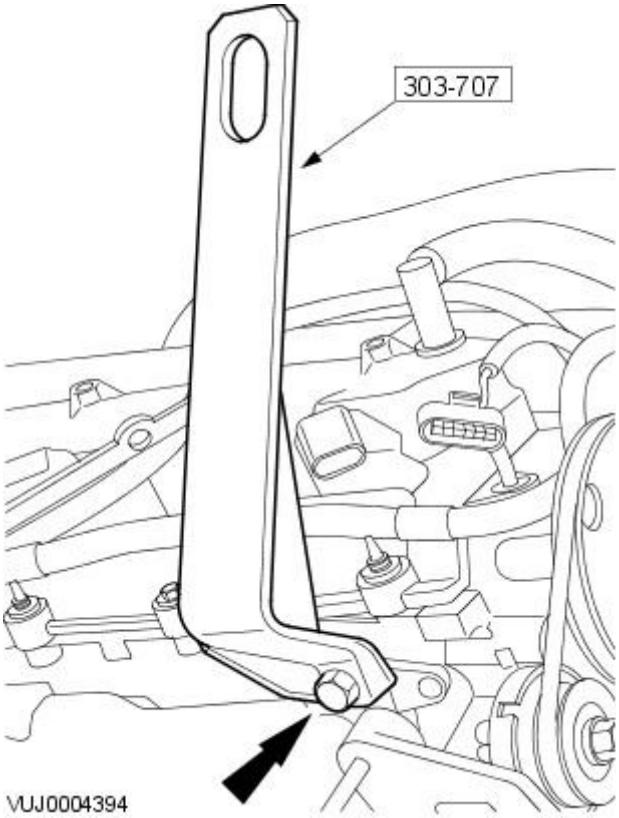

61. Remove the upper exhaust heat shield.

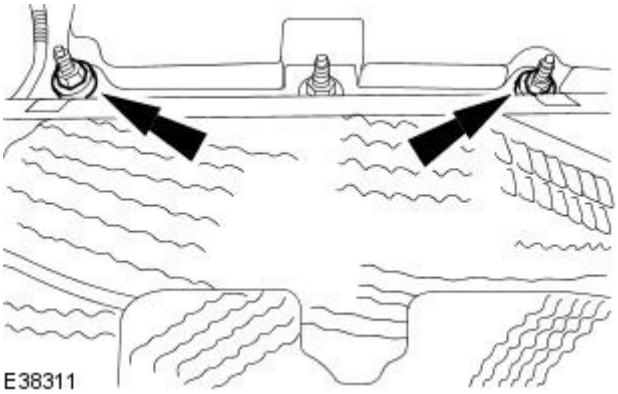

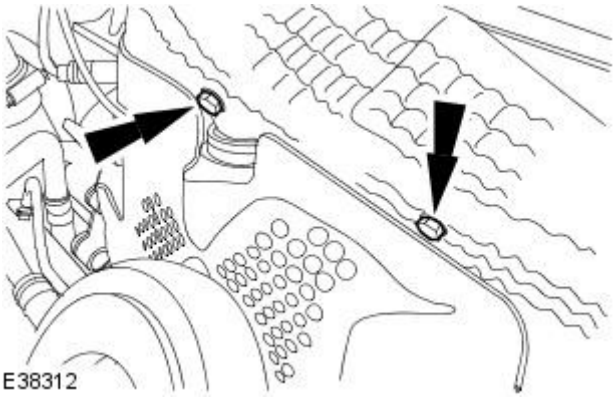

62. Remove the center exhaust heat shield retaining bolts.

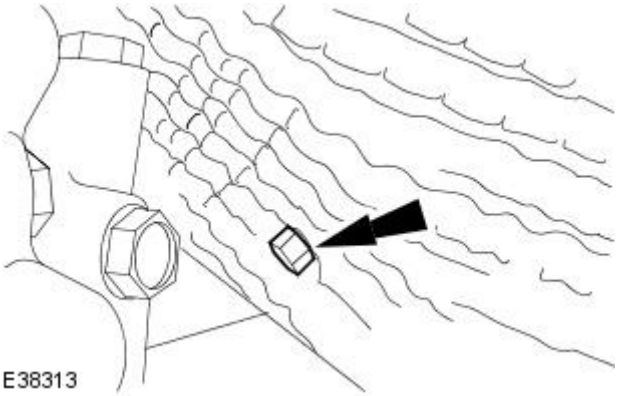

63. Remove the center exhaust heat shield.

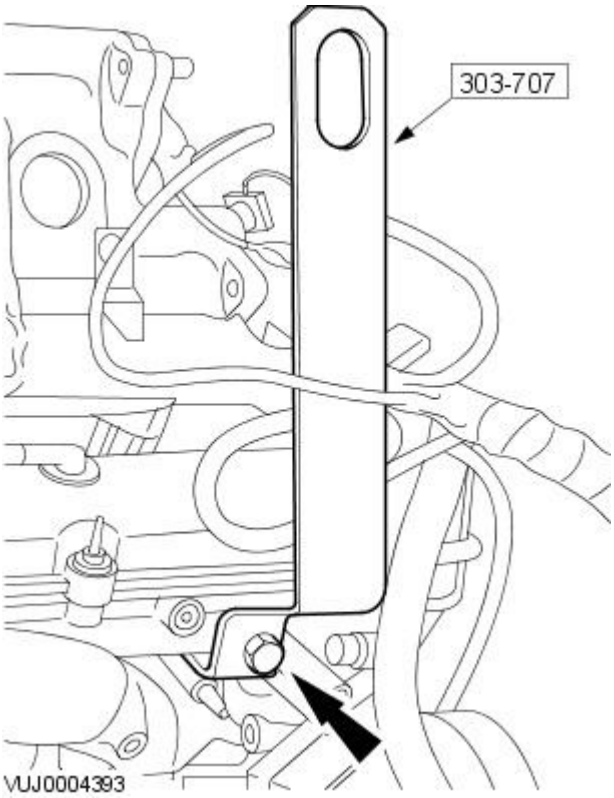

64. Install the special tool.

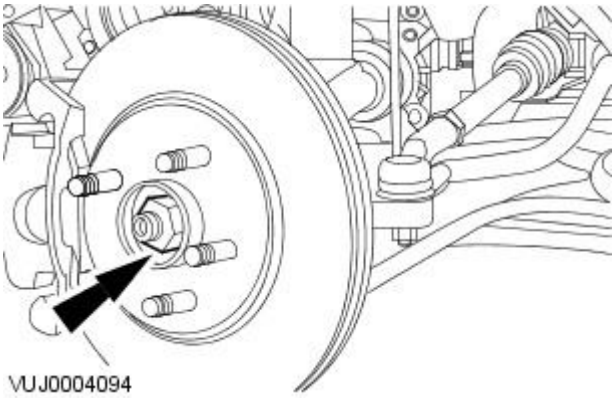

65. NOTE: Left-hand shown, right-hand similar.

Remove the front wheel hub retaining nuts.

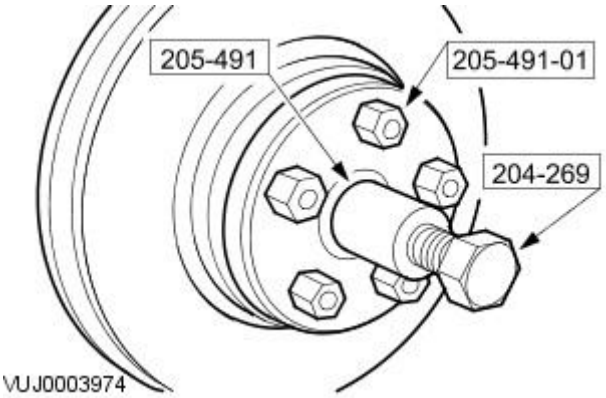

66. NOTE: Left-hand shown, right-hand similar.

Using the special tools, detach the halfshafts.

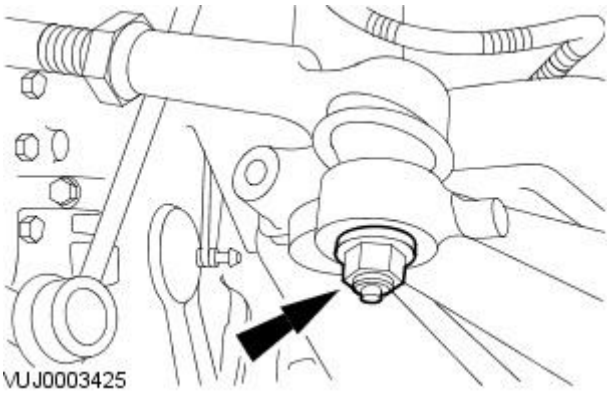

67. NOTE: Left-hand shown, right-hand similar.

Remove the tie rod end retaining nuts.

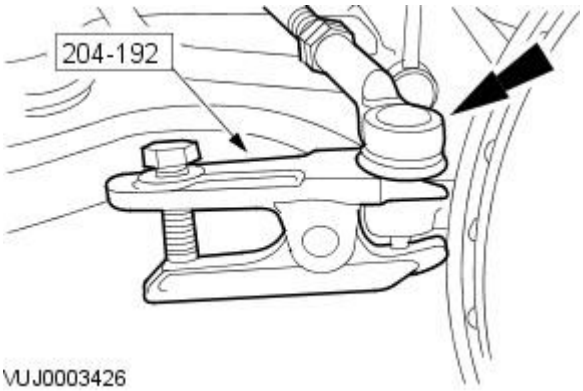

68. NOTE: Right-hand shown, left-hand similar.

Using the special tool, detach the tie rod ends.

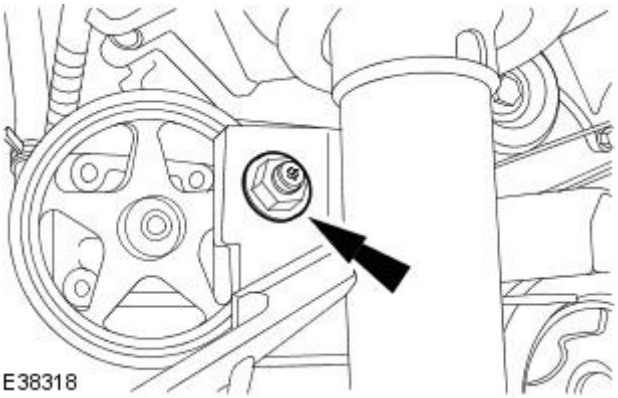

69. NOTE: Right-hand shown, left-hand similar.

Detach the stabilizer bar link arms.

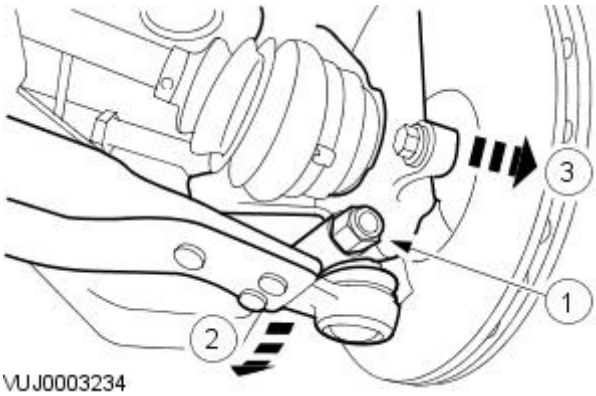

70. NOTE: Left-hand shown, right-hand similar.

Detach the wheel knuckles.

1. Remove the lower arm ball joint retaining bolt.
2. Reposition the lower arm.
3. Detach the wheel knuckles.

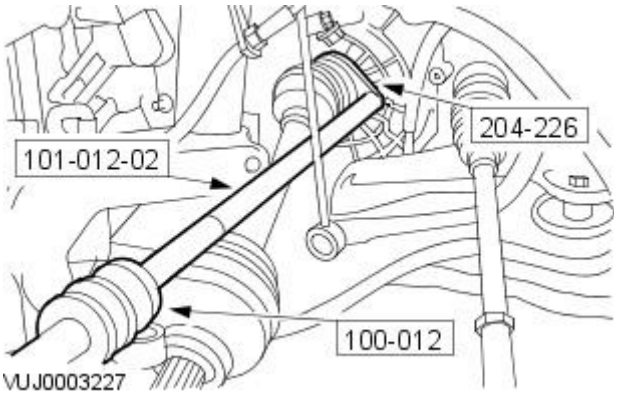

71. Using the special tools, remove the left-hand halfshaft.

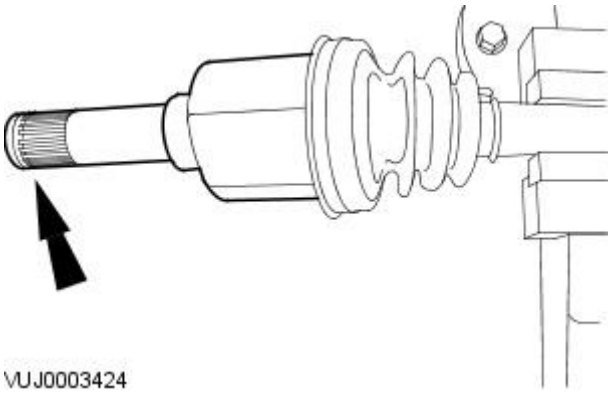

72. Remove and discard the halfshaft snap ring.

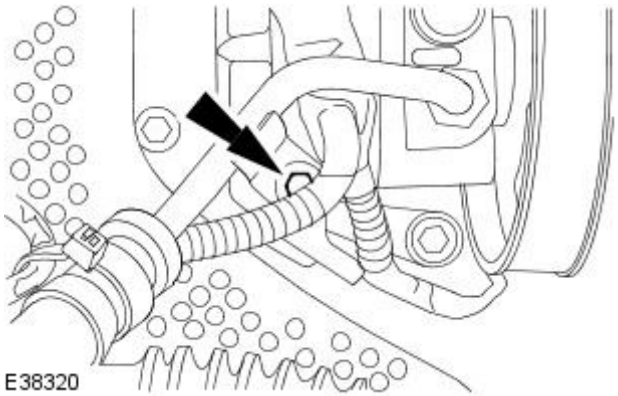

73. Remove the power steering high-pressure pipe retaining bolt.

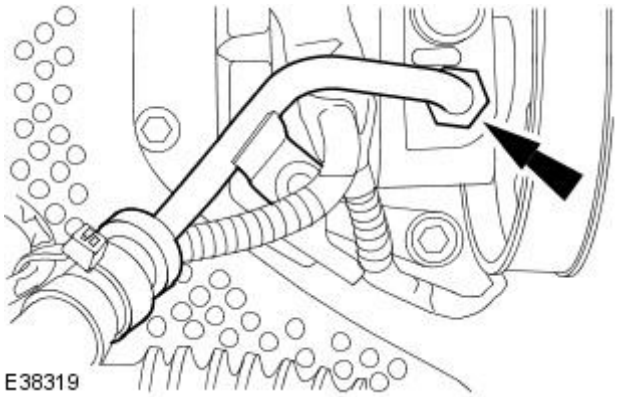

74. Disconnect the power steering high-pressure pipe.

- Remove and discard the O-ring seal.

75. Install the special tool.

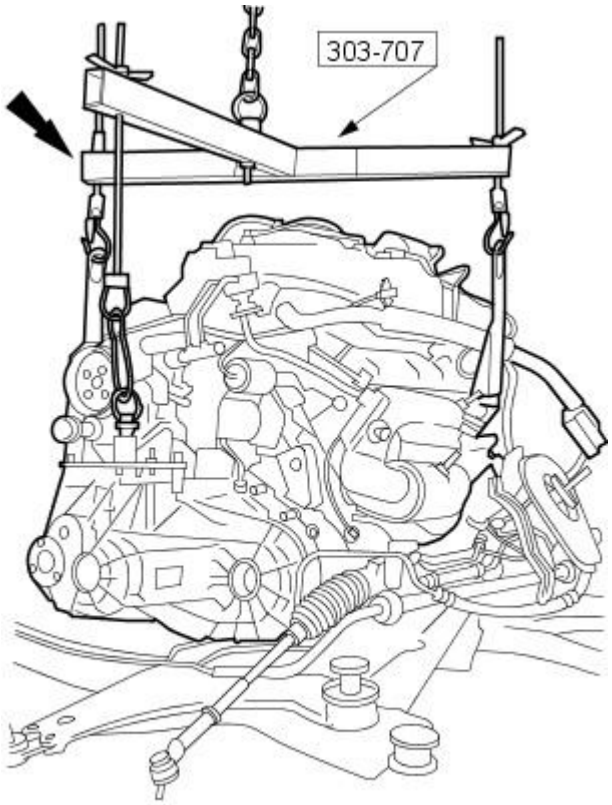

VUJ0004404

76. Remove the engine roll restrictor retaining bolt.

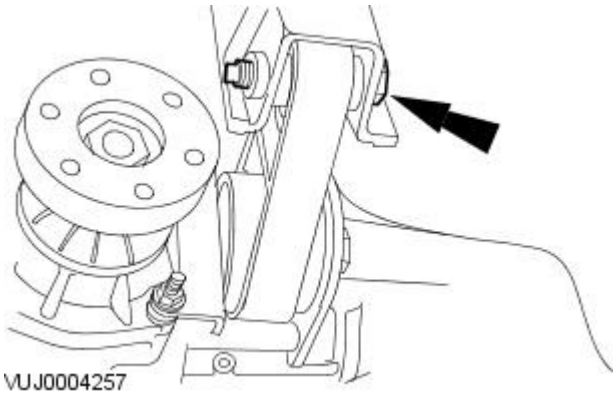

VUJ0004257

77. Remove the engine roll restrictor.

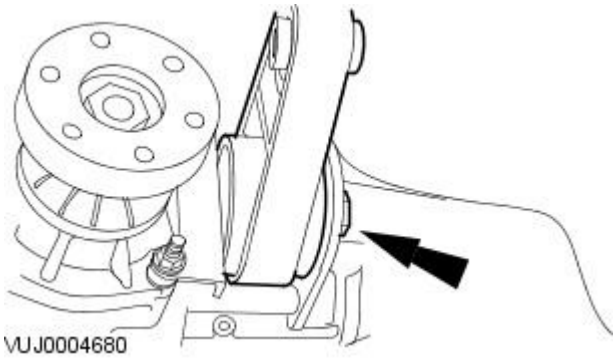

VUJ0004680

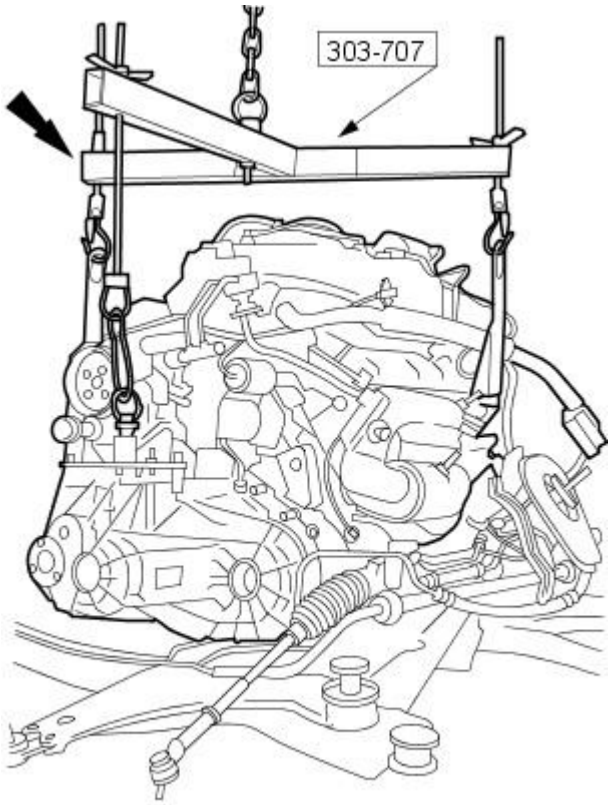

VUJ0004404

78. CAUTION: Make sure the right-hand drive halfshaft is supported, failure to follow this instruction may result in damage to the component.

Using the special tool, remove the engine and transaxle from the subframe.

Vehicles with 2.0L engine

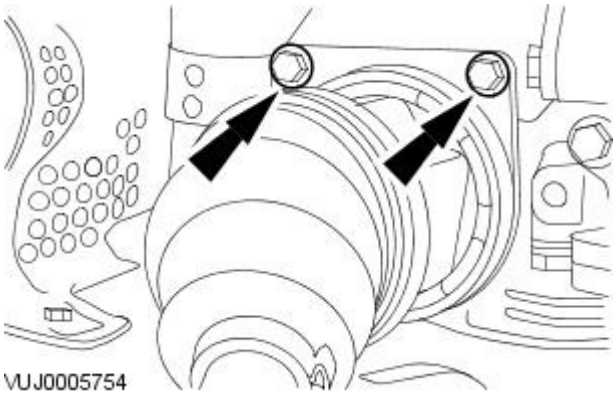

VUJ0005754

79. Remove the halfshaft and intermediate shaft assembly.

- Remove the intermediate shaft bearing carrier retaining bolts.

Vehicles with 2.5L or 3.0L engine

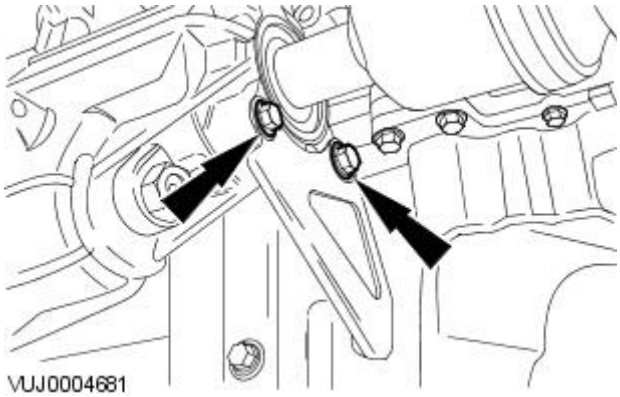

VUJ0004681

80. Remove the transfer case Y bracket retaining bolts.

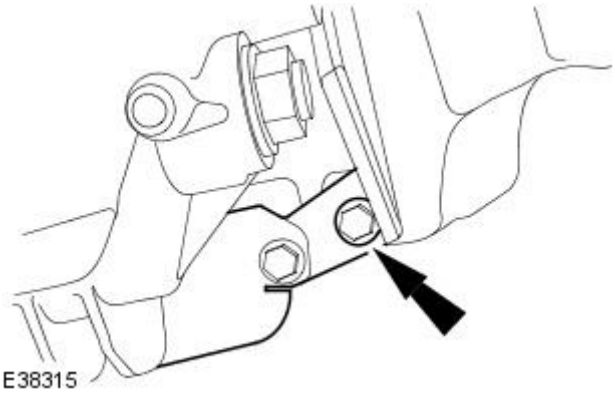

81. Remove the transfer case Y bracket.

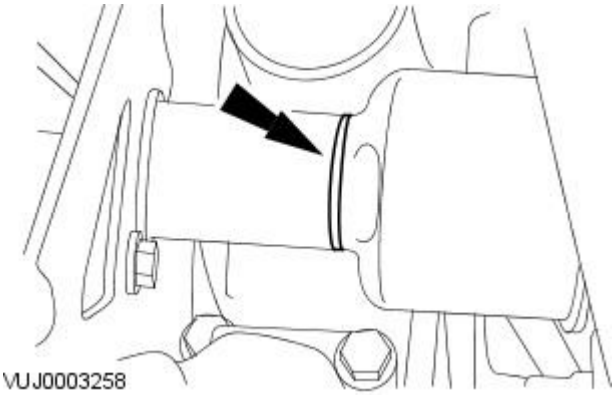

82. Remove the halfshaft seal.

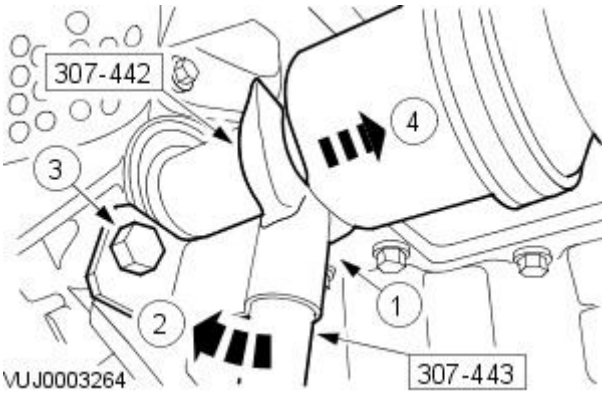

83. CAUTION: To prevent damage to the transfer case internal seal, make sure the link shaft is not retracted further that 200 mm (7.87 inches) from the transfer case.

Using the special tools, remove the halfshaft.

1. Attach the special tools to the halfshaft.
2. Lever the special tools, to detach the halfshaft.
3. Install the transfer case Y bracket retaining bolt.
4. Remove the halfshaft.

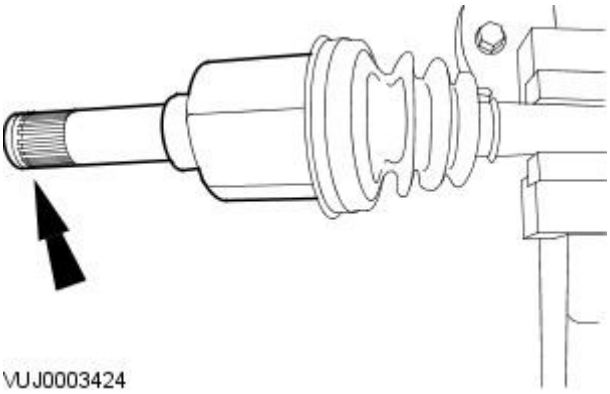

84. Remove and discard the halfshaft snap ring.

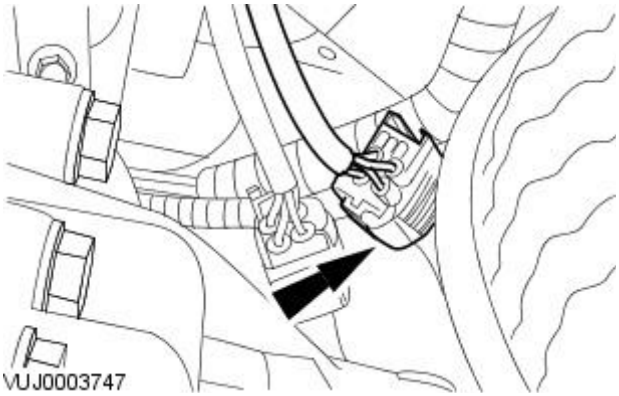

85. Disconnect the right-hand catalyst monitor sensor electrical connector.

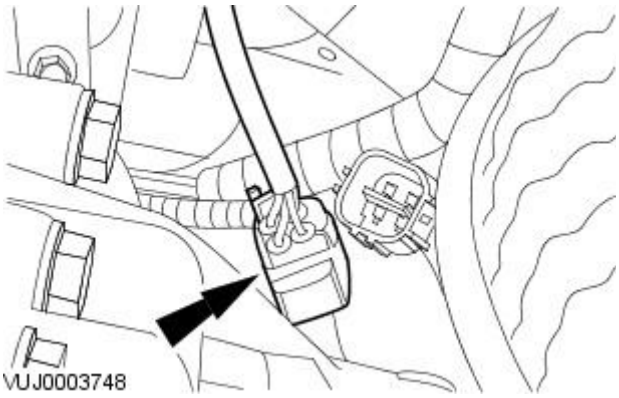

86. Disconnect the right-hand heated oxygen sensor (HO2S) electrical connector.

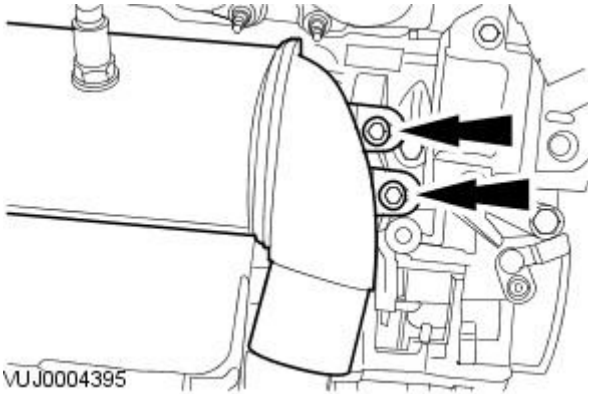

87. Remove the right-hand catalytic converter retaining bolts.

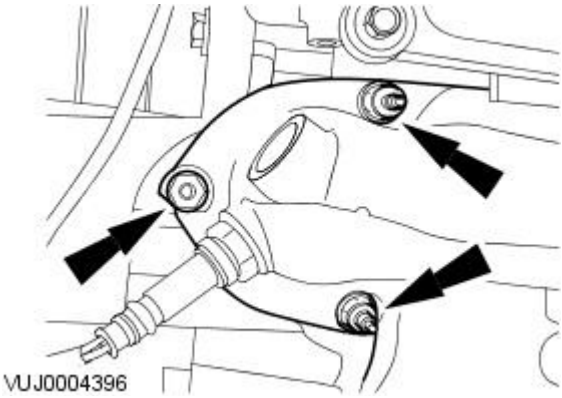

88. Remove the right-hand catalytic converter.

- Remove and discard the retaining nuts.

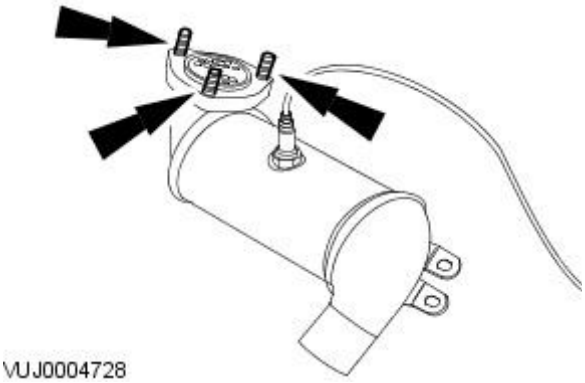

89. Remove and discard the catalytic converter retaining studs.

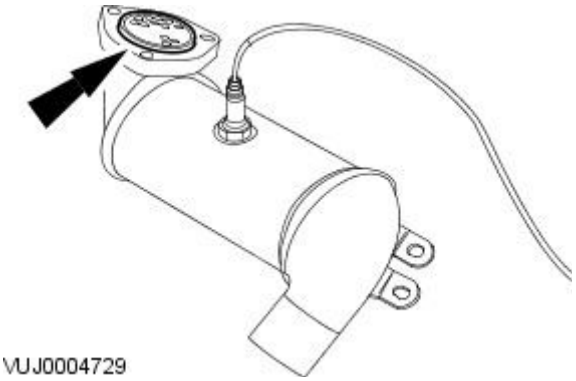

90. Remove and discard the catalytic converter sealing ring.

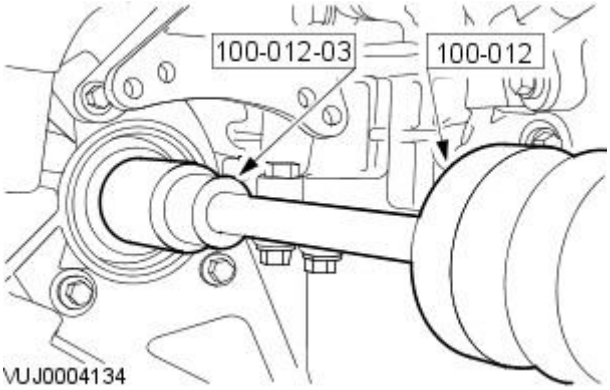

91. Using the special tool, detach the transfer case link shaft.

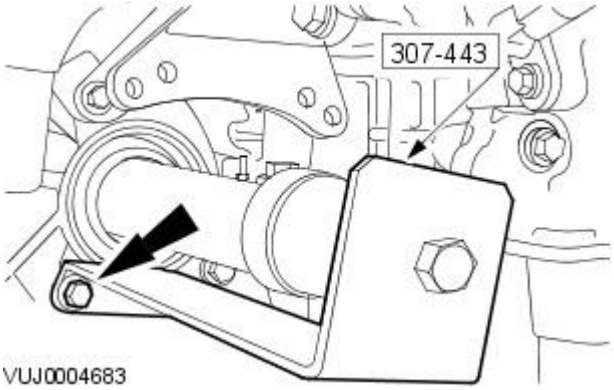

92. CAUTION: To prevent damage to the transfer case internal seal, make sure the link shaft is not retracted further that 200 mm (7.87 inches) from the transfer case.

Using the special tool, partially remove transfer case link shaft.

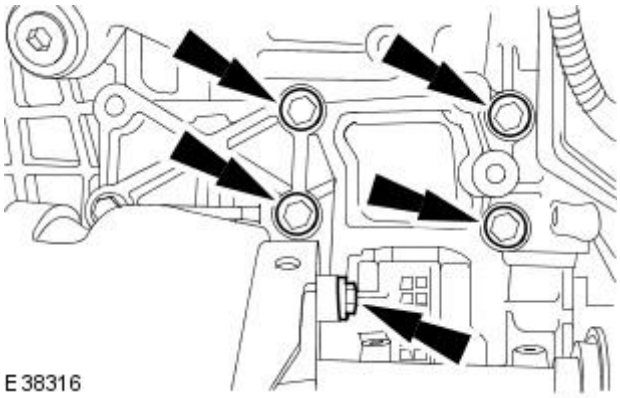

93. Remove the catalytic converter mounting bracket.

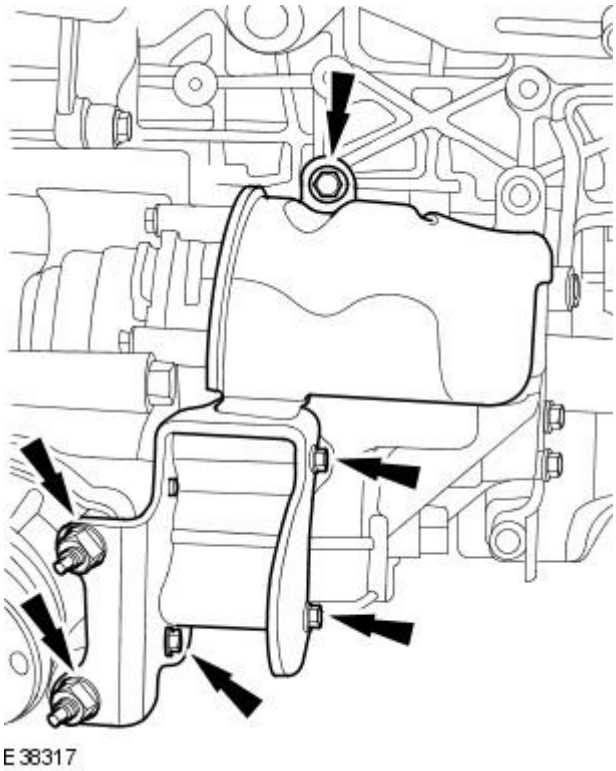

94. Remove the transfer case mounting bracket.

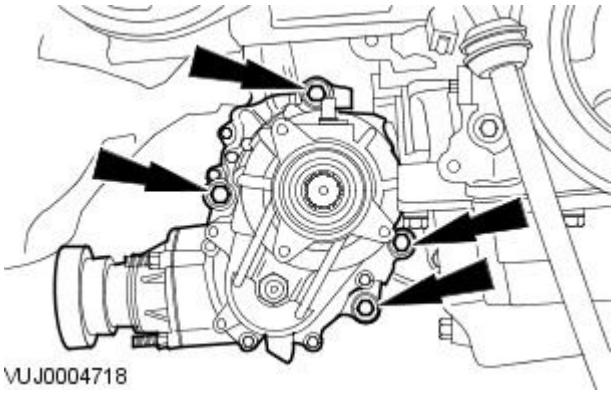

95. Remove the transfer case.

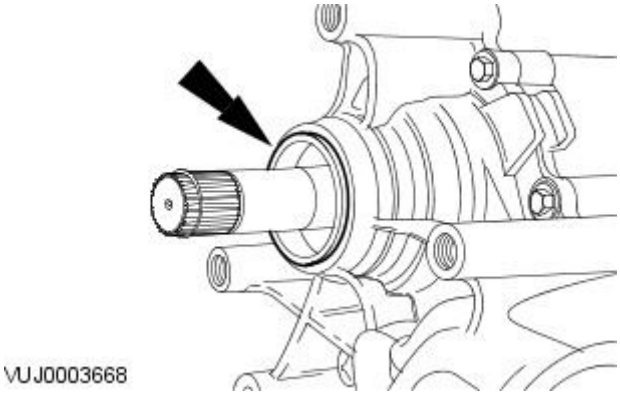

96. Remove and discard the transfer case O-ring seal.

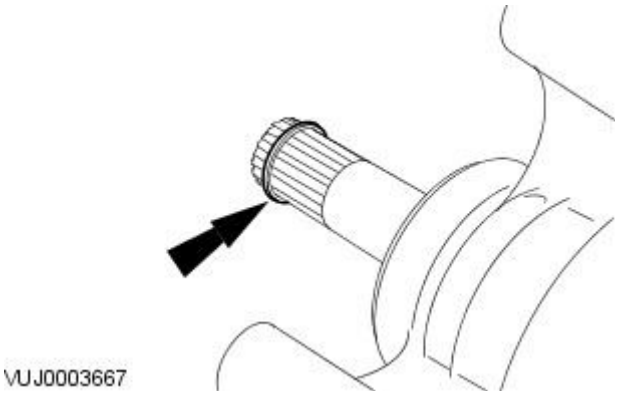

97. Remove and discard the link shaft snap ring.

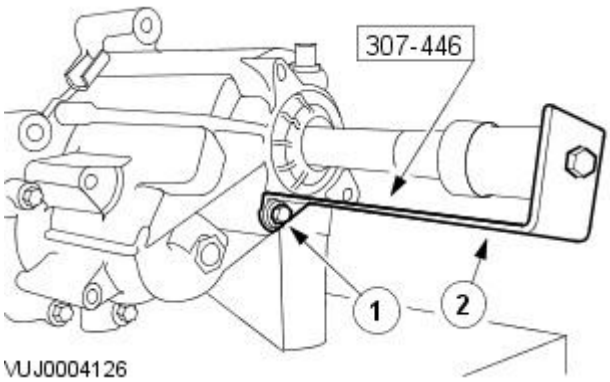

98. Remove the link shaft limiting tool.

1. Remove the retaining bolt.
2. Remove the link shaft limiting tool.

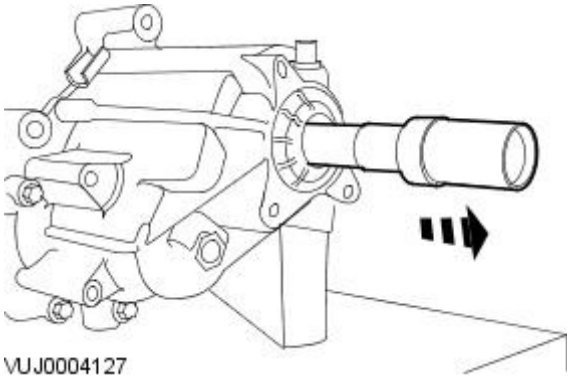

99. Remove the link shaft.

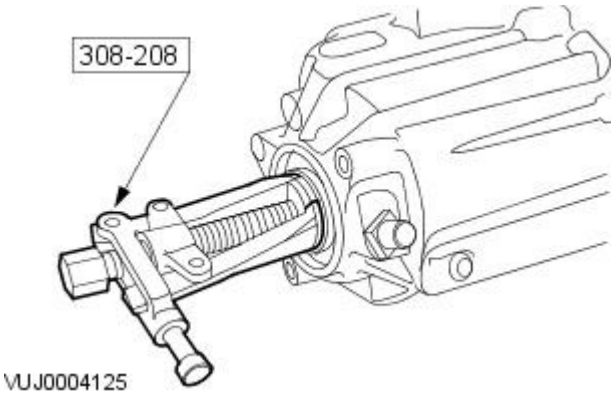

100. Using the special tool, remove and discard the link shaft oil seal.

All vehicles

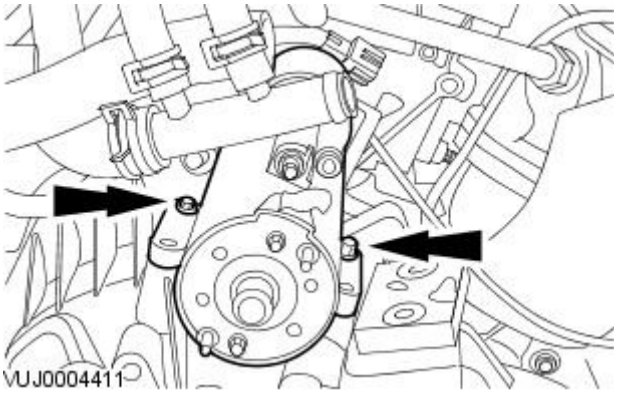

101. Remove the starter motor.

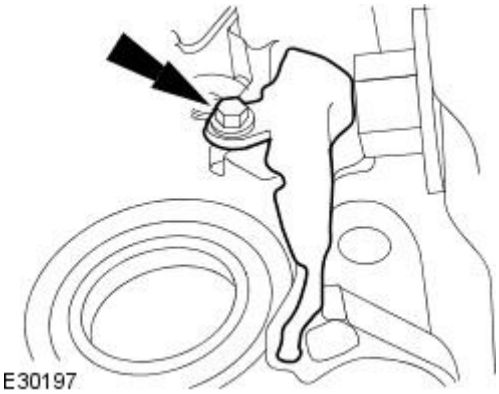

102. Remove the dust cover.

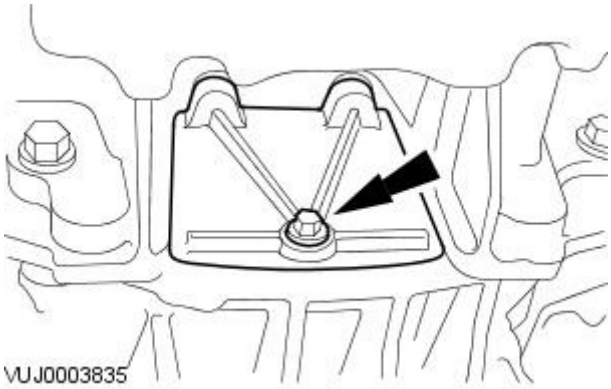

103. Remove the access cover.

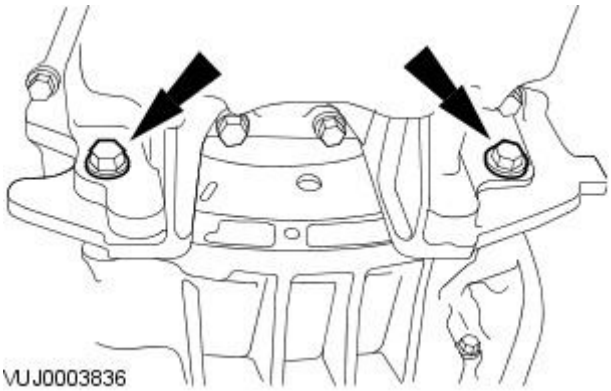

104. Remove the transaxle retaining bolts.

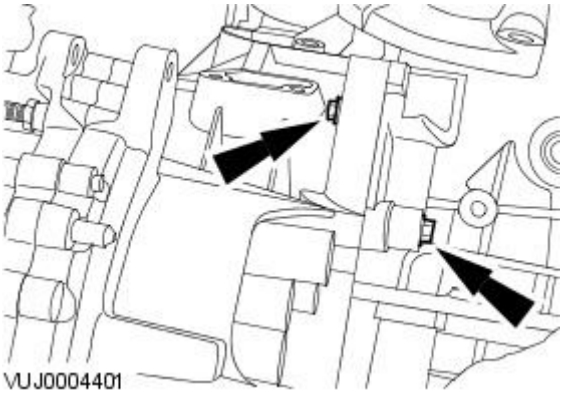

105. Remove the transaxle retaining bolts.

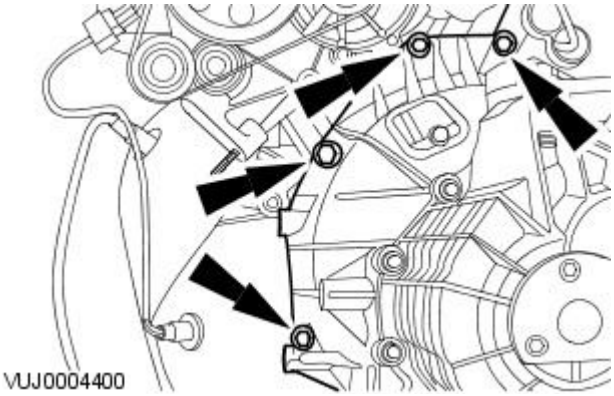

106. Remove the transaxle.

Engine - 2.0L NA V6 - AJV6 / 2.5L NA V6 - AJV6 / 3.0L NA V6 - AJ27 - EngineVehicles With: 5-Speed Automatic Transaxle - JATCO / 6-Speed Automatic Transaxle - AWF21

Removal

Special Tool(s)	
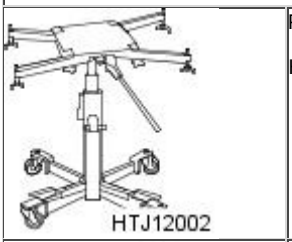 HTJ12002	Powertrain Assembly Jack HTJ1200-2
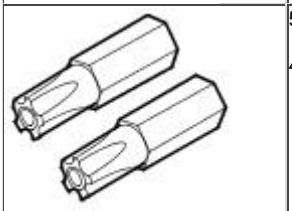 418-535	5 Point Security Torx Bit 418-535
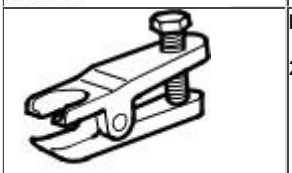 204-192	Ball joint splitter 204-192
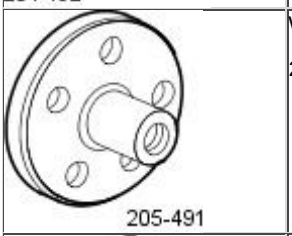 205-491	Wheel hub puller 205-491
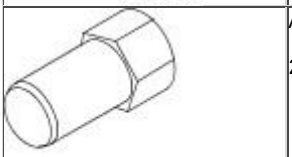 20549101	Adaptor nuts 205-491-01
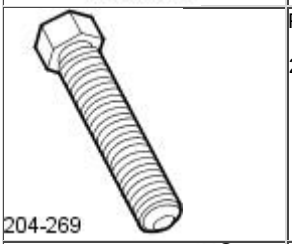 204-269	Forcing screw 204-269
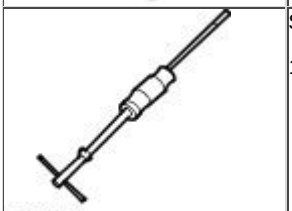 100012	Slide hammer 100-012
100-012-02	Slide hammer shaft 100-012-02
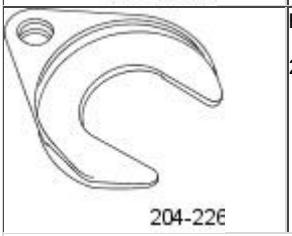 204-226	Halfshaft remover fork 204-226

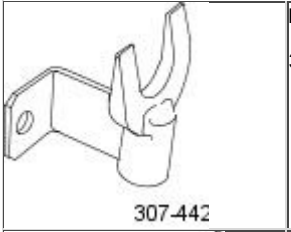	Right-hand halfshaft splitter 307-442
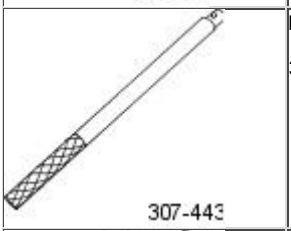	Right-hand halfshaft splitter handle 307-443
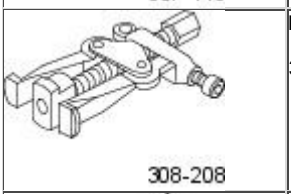	Pinion oil seal remover 308-208
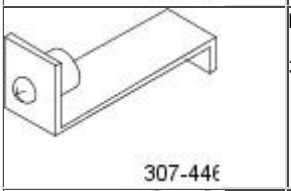	Link shaft limiting tool 307-446
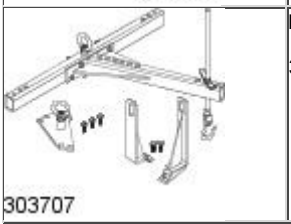	Engine lifting kit 303-707

Removal

All vehicles

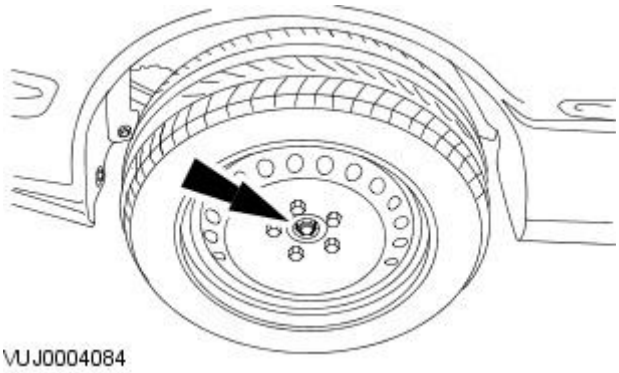

1. NOTE: Left-hand shown, right-hand similar.

Loosen the front hub retaining nuts.

2. Drain the transaxle.
For additional information, refer to: Transmission Fluid Drain and Refill (307-01B Automatic Transmission/Transaxle - Vehicles With: 6-Speed Automatic Transaxle - AWF21, General Procedures).

3. Remove the steering column lower retaining bolt.

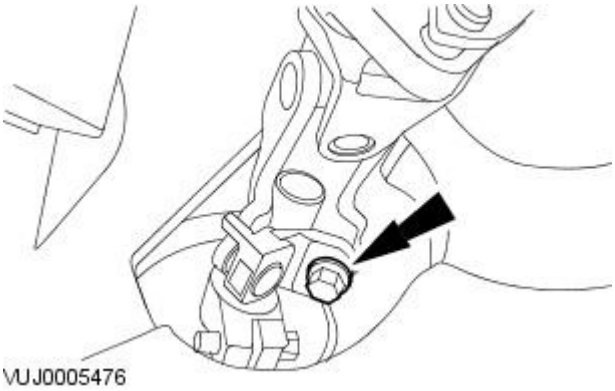

4. Remove the battery tray.
For additional information, refer to: Battery Tray (414-01 Battery, Mounting and Cables, Removal and Installation).

5. Recover the air conditioning (A/C) refrigerant.

For additional information, refer to: Air Conditioning (A/C) System Recovery, Evacuation and Charging (412-00 Climate Control System - General Information, General Procedures).

6. Remove the front wheels and tires.
For additional information, refer to: Wheel and Tire (204-04 Wheels and Tires, Removal and Installation).

7. Drain the cooling system.
For additional information, refer to: Cooling System Draining, Filling and Bleeding (303-03A Engine Cooling - 2.0L NA V6 - AJV6/2.5L NA V6 - AJV6/3.0L NA V6 - AJ27, General Procedures).

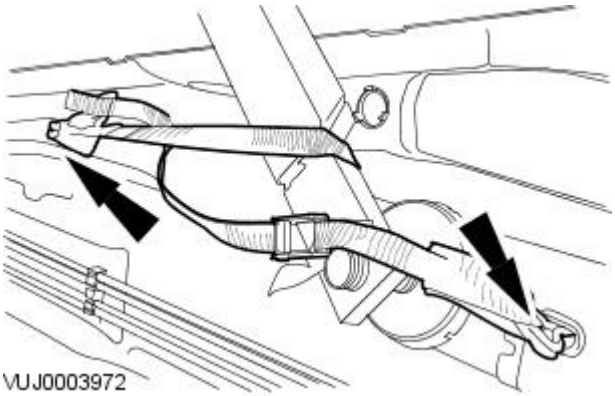

8. CAUTION: To prevent the vehicle becoming unstable when the engine and transmission assembly are removed, install the vehicle tie down straps.

• NOTE: Right-hand shown, left-hand similar.

Install the front vehicle tie down strap.

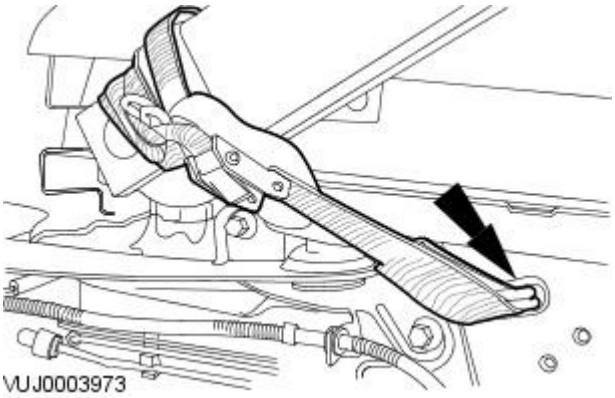

9. CAUTION: To prevent the vehicle becoming unstable when the engine and transmission assembly are removed, install the vehicle tie down straps.

• NOTE: Right-hand shown, left-hand similar.

Install the rear vehicle tie down strap.

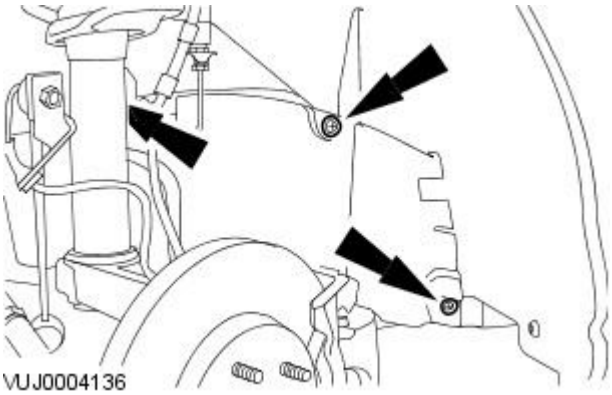

10. NOTE: Right-hand shown, left-hand similar.

Remove the splash shield.

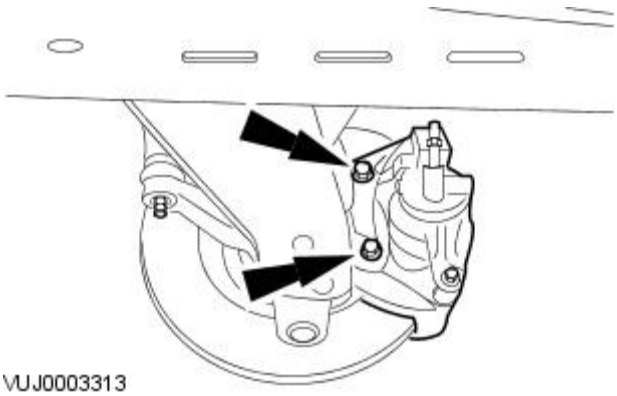

11. NOTE: Left-hand shown, right-hand similar.

Detach the brake caliper assembly.

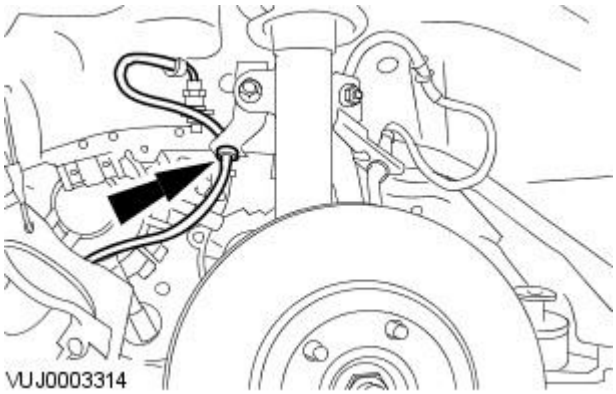

12. NOTE: Left-hand shown, right-hand similar.

Detach the brake pipe.

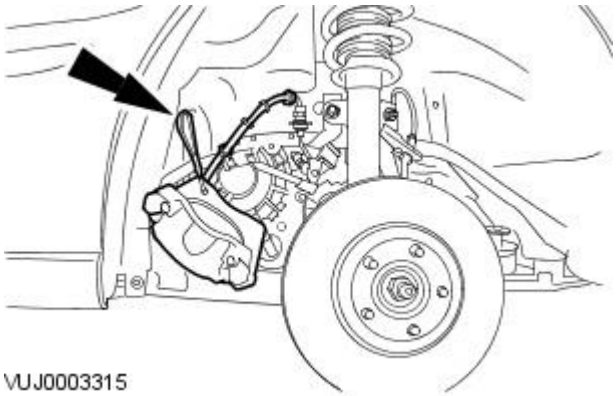

13. NOTE: Support the brake caliper assembly using tie straps.

- NOTE: Left-hand shown, right-hand similar.

Reposition and secure the brake caliper assembly.

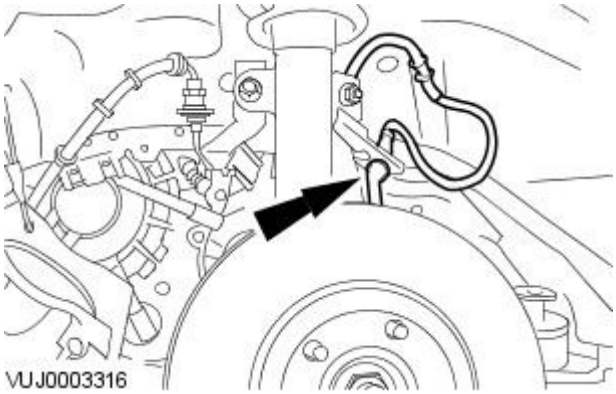

14. NOTE: Left-hand shown, right-hand similar.

Detach the anti-lock braking system (ABS) wheel speed sensor.

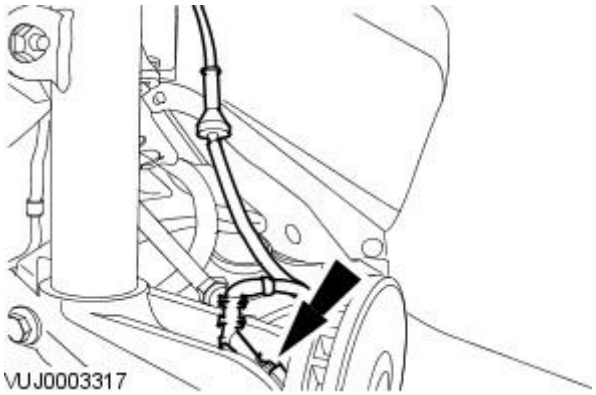

15. NOTE: Left-hand shown, right-hand similar.

Disconnect the ABS wheel speed sensor.

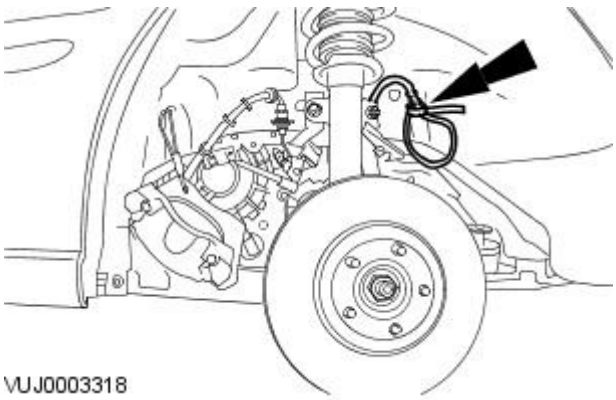

16. NOTE: Secure the ABS wheel speed sensor using tie straps.

- NOTE: Left-hand shown, right-hand similar.

Reposition and secure the ABS wheel speed sensor.

17. Remove the cooling fan motor and shroud.
For additional information, refer to: Cooling Fan Motor and Shroud (303-03A Engine Cooling - 2.0L NA V6 - AJV6/2.5L NA V6 - AJV6/3.0L NA V6 - AJ27, Removal and Installation).

Vehicles with 2.5L or 3.0L engine

18. Remove the driveshaft.
For additional information, refer to: Driveshaft (205-01 Driveshaft, Removal and Installation).

All vehicles

19. Remove the front muffler.
For additional information, refer to: Front Muffler - 2.0L NA V6 - AJV6/2.5L NA V6 - AJV6/3.0L NA V6 - AJ27 (309-00 Exhaust System, Removal and Installation).

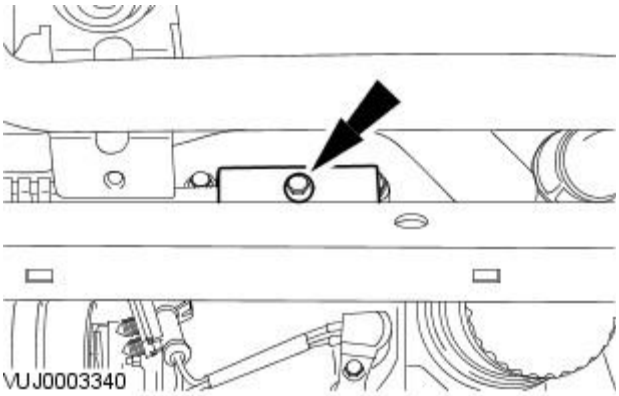

20. NOTE: Using a suitable blanking plug, seal the tube and the A/C compressor.

• NOTE: Secure the A/C compressor supply and return tubes using tie straps.

Detach the A/C compressor supply and return tubes.

- Remove and discard the O-ring seals.

21. Detach the coolant hose.

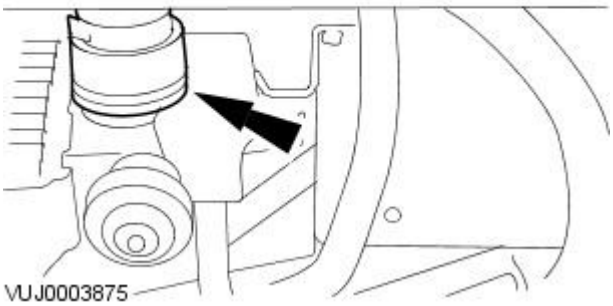

22. Remove the selector cable shield.

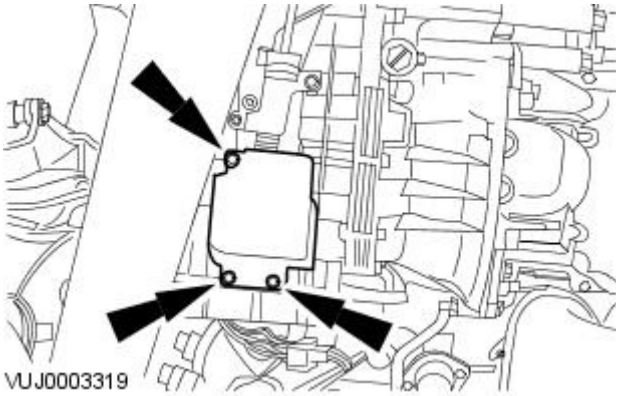

23. Detach the selector cable.

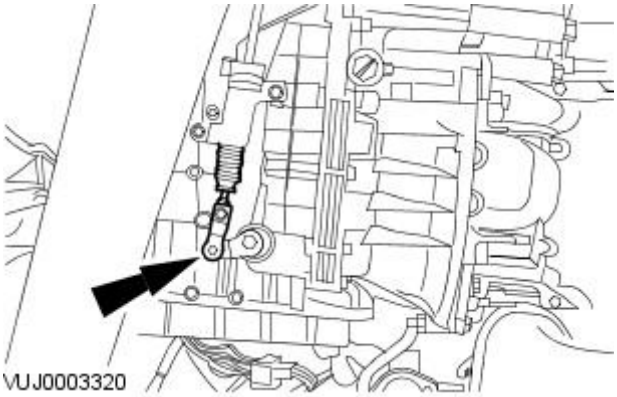

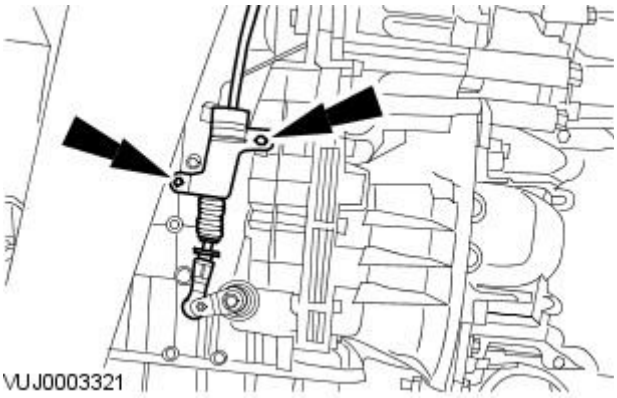

24. NOTE: Secure the selector cable using tie straps

Disconnect the selector cable.

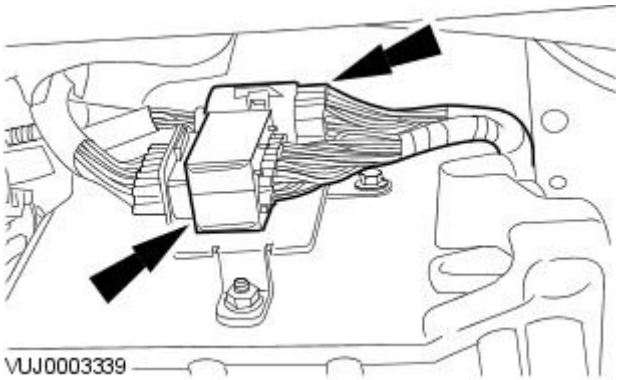

25. Disconnect the automatic transaxle electrical connectors.

26. Lower the vehicle.

27. Remove the air cleaner.
For additional information, refer to: Air Cleaner (303-12A Intake Air Distribution and Filtering - 2.0L NA V6 - AJV6/2.5L NA V6 - AJV6/3.0L NA V6 - AJ27, Removal and Installation).

28. Remove the air filter intake pipe.

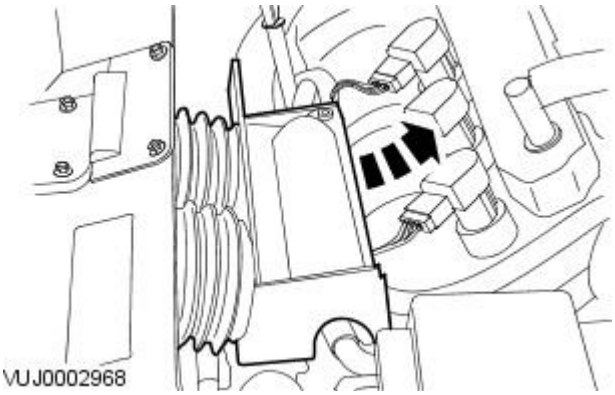

29. Detach the coolant hose.

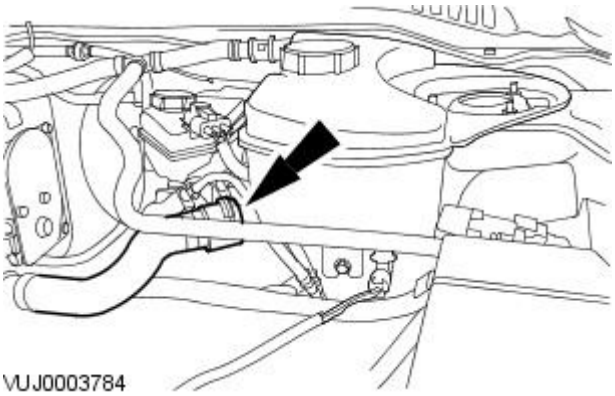

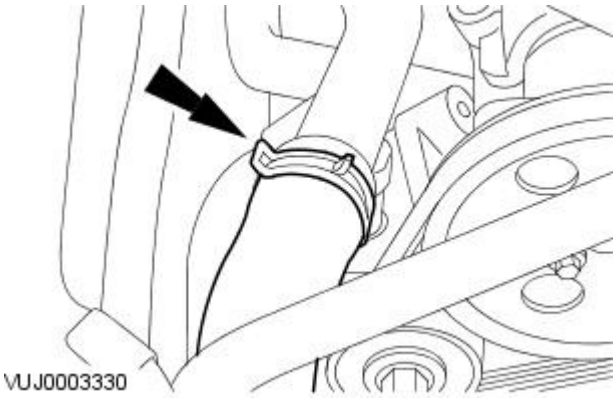

30. Detach the coolant hose.

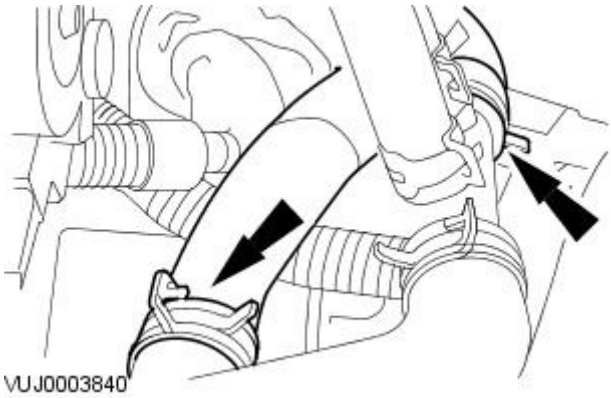

31. Detach the coolant hoses.

Vehicles with 2.0L engine

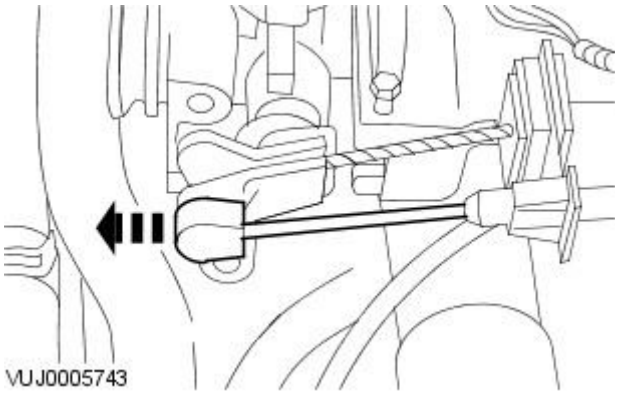

32. Detach the cruise control cable.

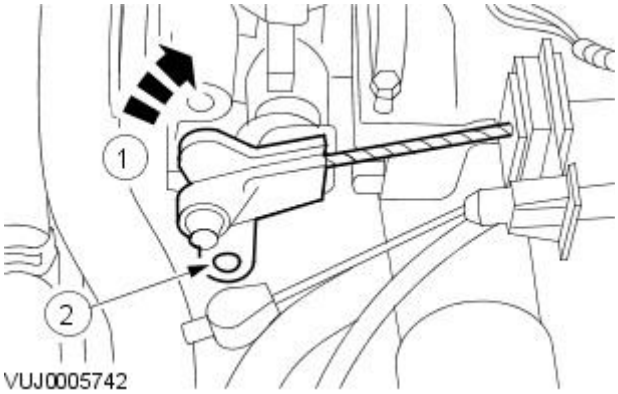

33. Detach the accelerator cable.

1. Reposition the accelerator lever to the fully open position.
2. Detach the accelerator cable.

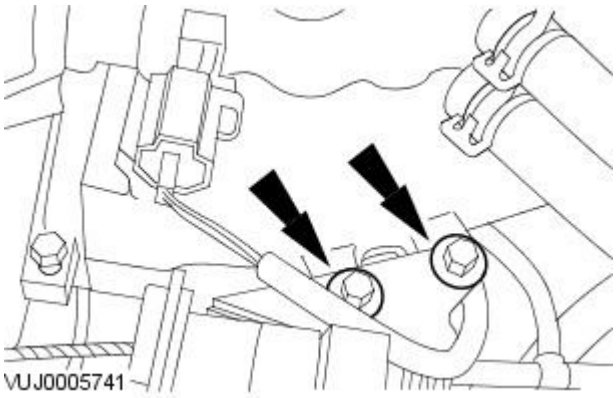

34. Detach the accelerator cable retaining bracket.

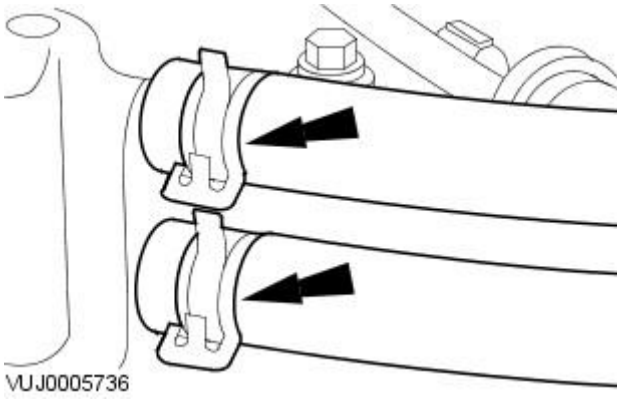

35. Detach the coolant hoses.

All vehicles

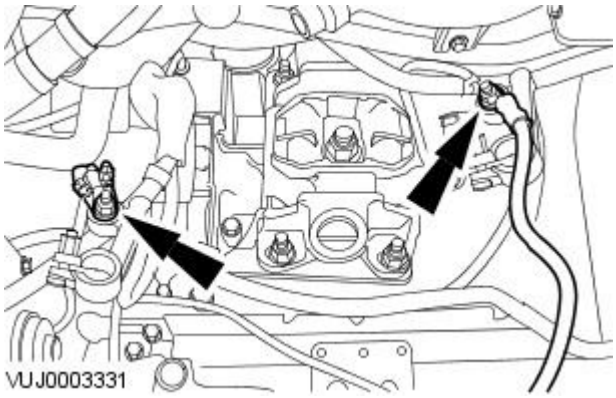

36. Detach the battery cables.

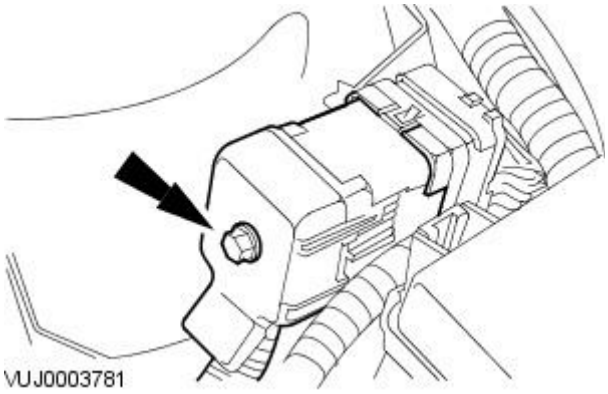

37. Disconnect the engine harness electrical connector.

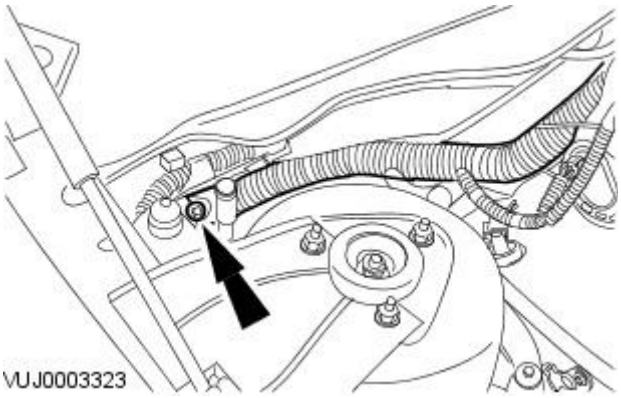

38. Using special tool 418-535 disconnect the engine control module (ECM) electrical connector.

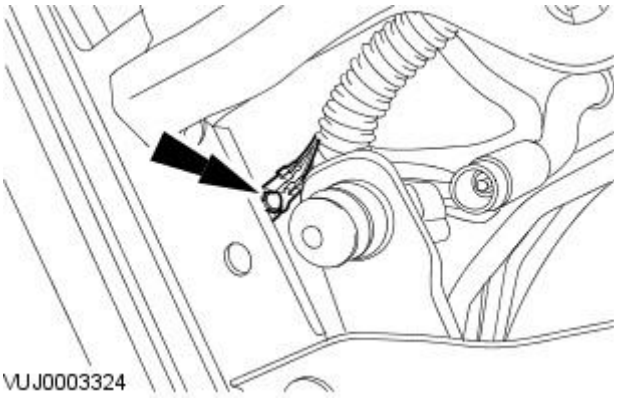

39. Disconnect the ground cable.

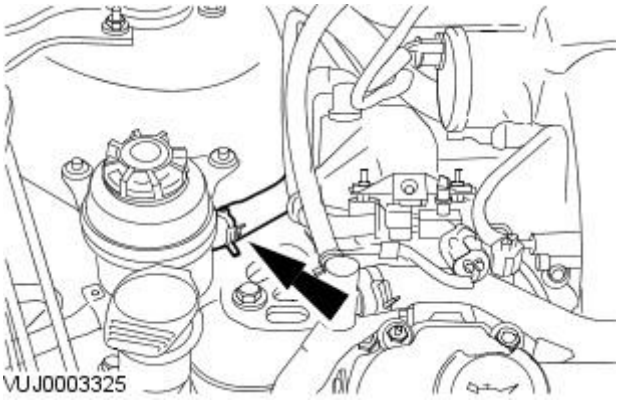

40. NOTE: Drain the fluid into a suitable container.

- NOTE: Use a suitable blanking plug to seal the hose.

Detach the power steering hose.

41. Disconnect the spring lock coupling.
For additional information, refer to: Spring Lock Couplings (310-00 Fuel System - General Information, General Procedures).

42. Detach the coolant pipe.

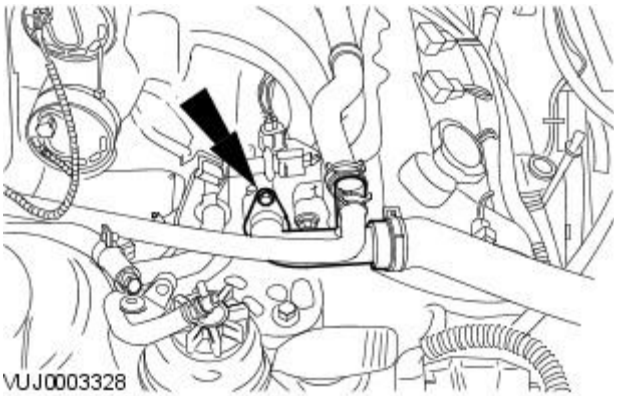

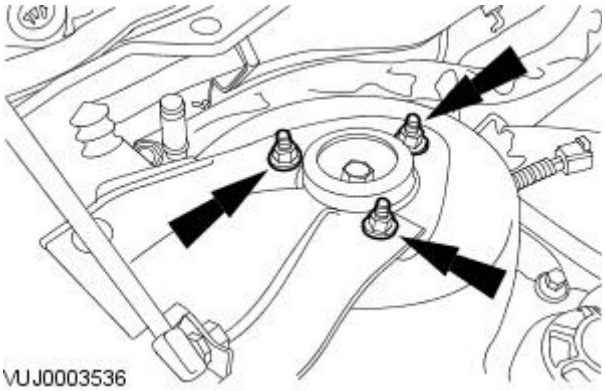

43. NOTE: Right-hand shown, left-hand similar.

Detach the strut and spring assembly.

44. Raise the vehicle.

45. Install the special tool.

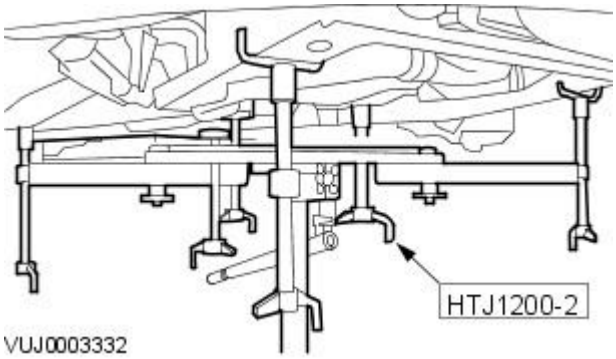

46. NOTE: Left-hand shown, right-hand similar.

Position and adjust the special tool rear height adjuster.

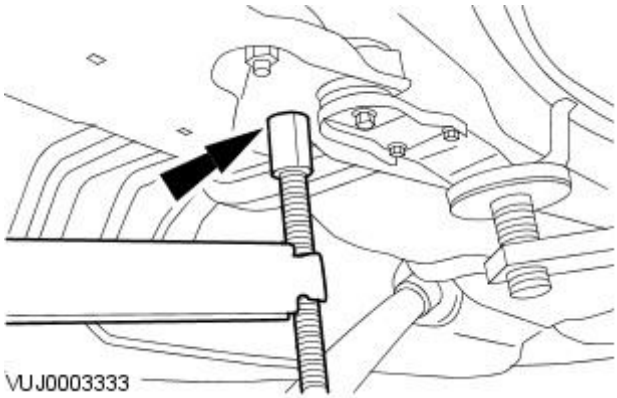

47. NOTE: Right-hand shown, left-hand similar.

Position and adjust the special tool front height adjuster.

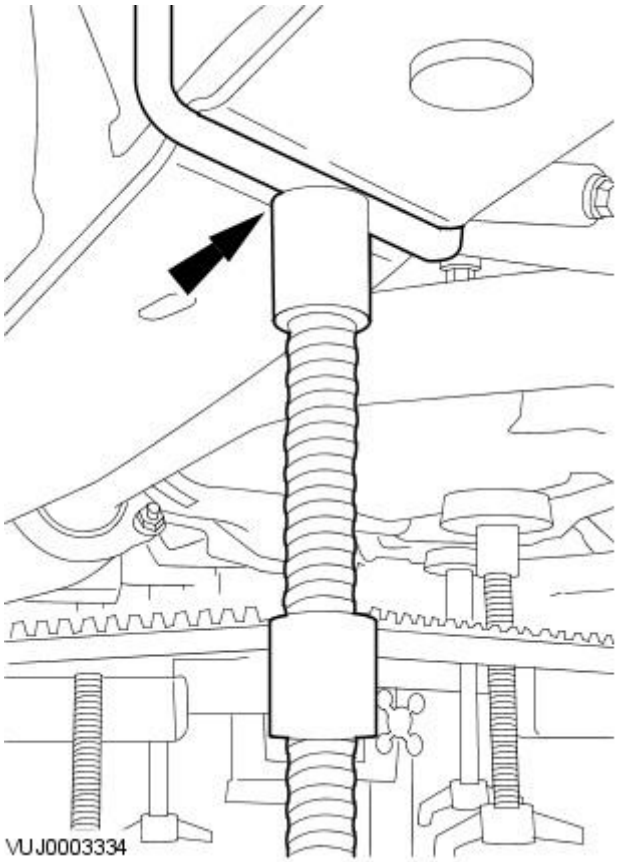

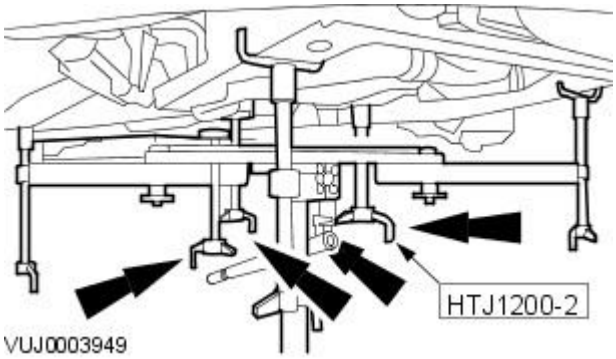

48. Position and adjust the special tool engine height adjusters.

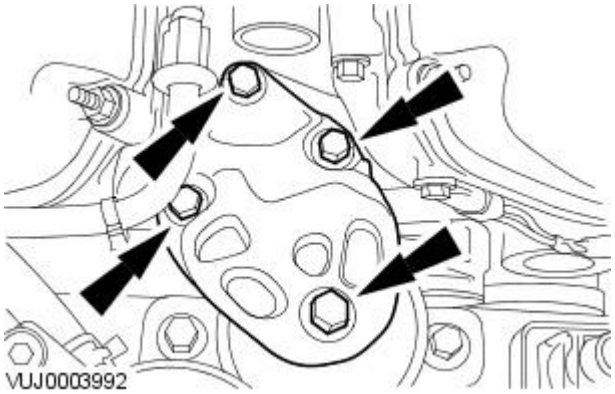

49. Remove the engine support bracket.

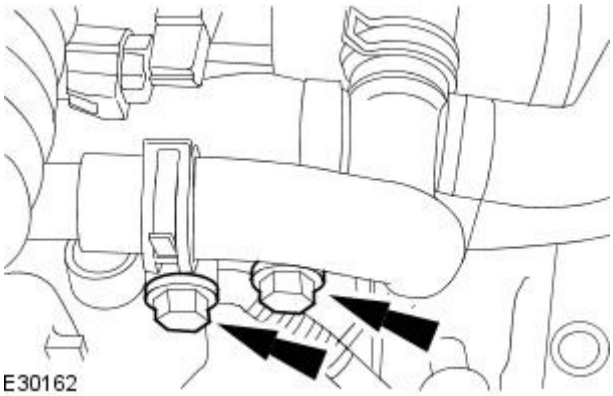

50. Detach the support bar.

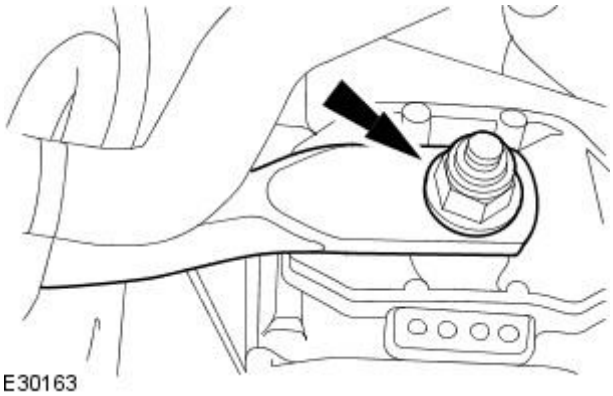

51. Remove the support bar.

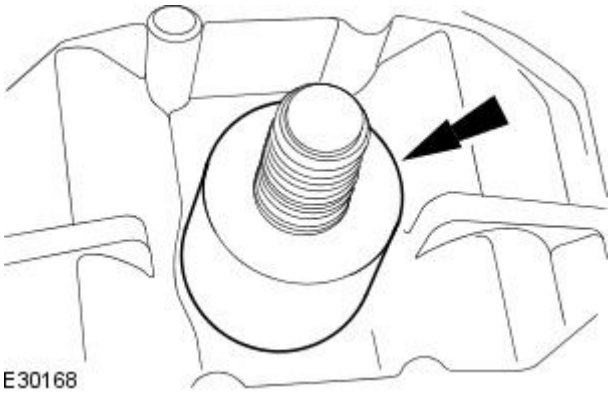

52. Remove the spacer.

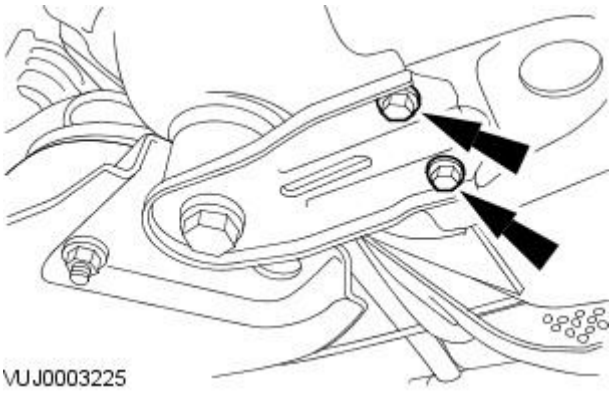

53. NOTE: Left-hand shown, right-hand similar.

Remove the front subframe reinforcement plate retaining bolts.

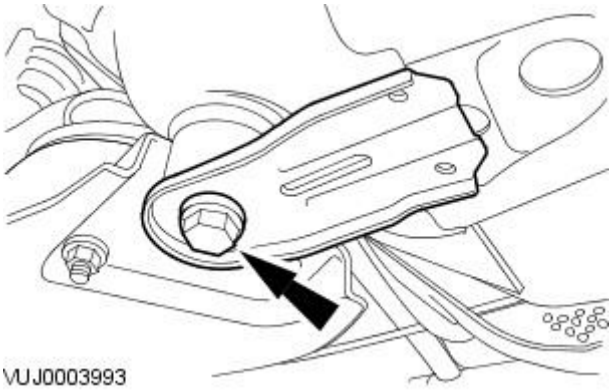

54. NOTE: Left-hand shown, right-hand similar.

Remove the front subframe reinforcement plate.

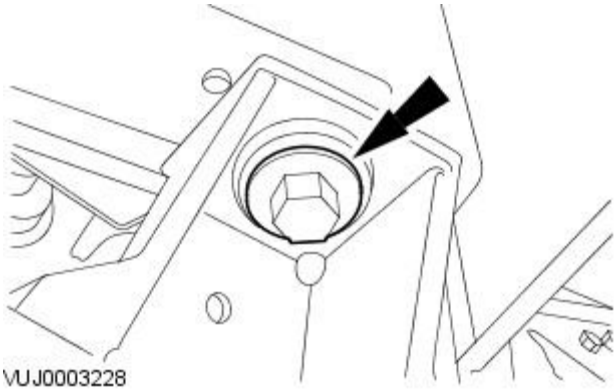

55. NOTE: Left-hand shown, right-hand similar.

Detach the front subframe.

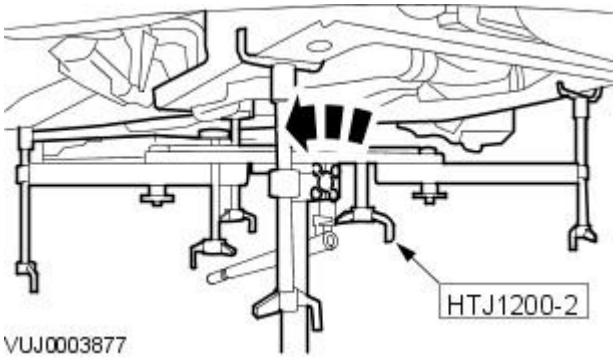

56. WARNING: Rotate the special tool height adjustment valve slowly. Failure to follow this instruction may result in personal injury.

Remove the engine and transaxle assembly.

- Rotate the special tool height adjustment valve counter clockwise.

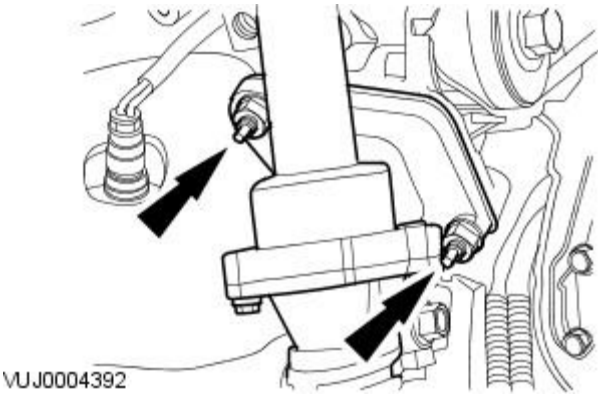

57. Remove the coolant system top hose.

- Remove and discard the gasket.

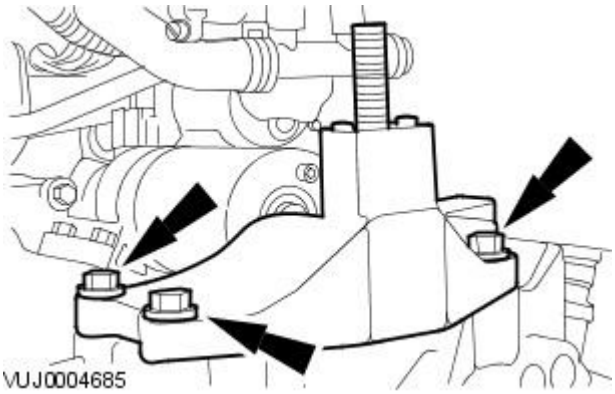

58. Remove the transaxle mount.

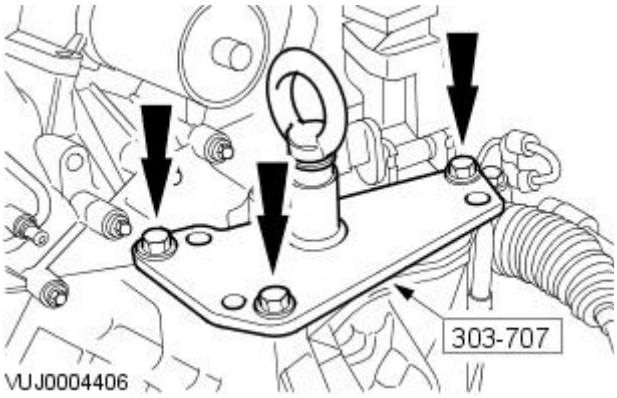

59. Install the special tool.

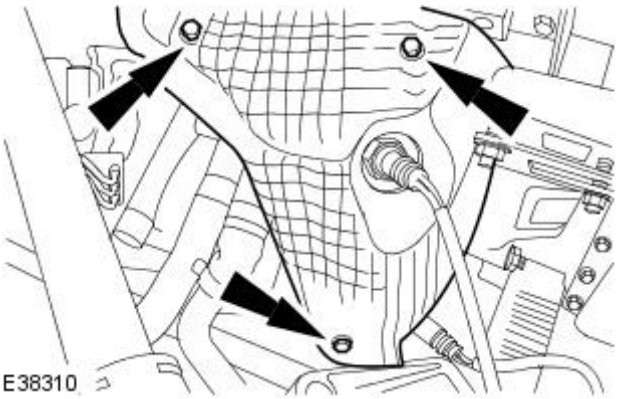

60. Remove the left-hand exhaust manifold heat shield.

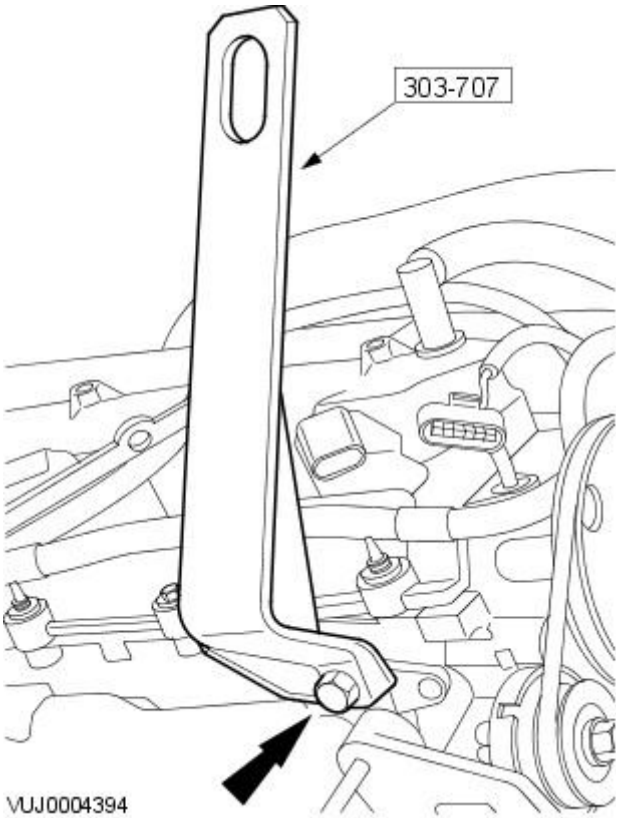

61. Install the special tool.

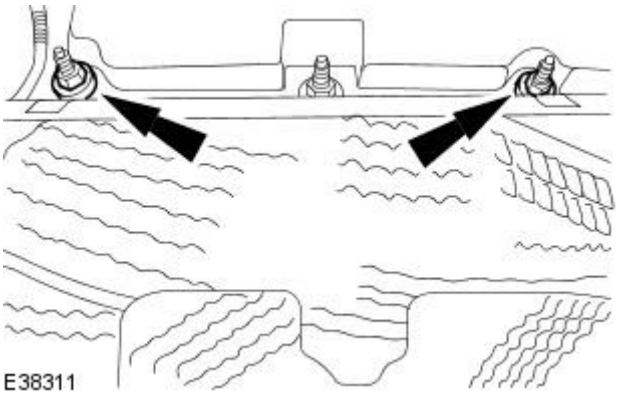

62. Remove the upper exhaust heat shield.

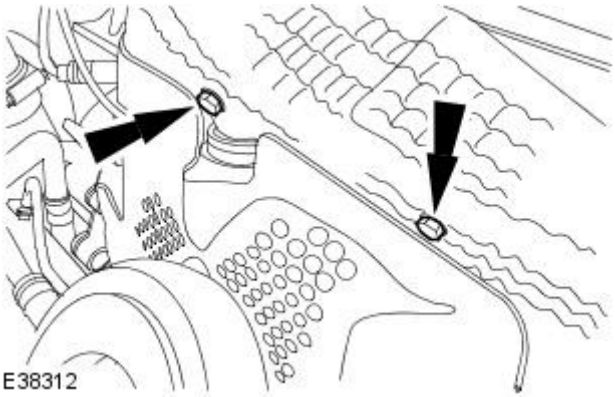

63. Remove the center exhaust heat shield retaining bolts.

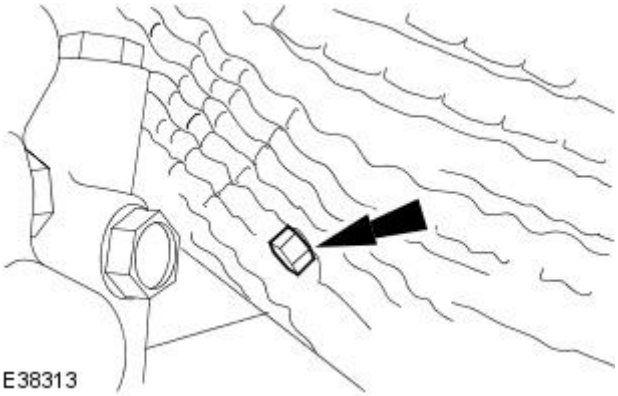

64. Remove the center exhaust heat shield.

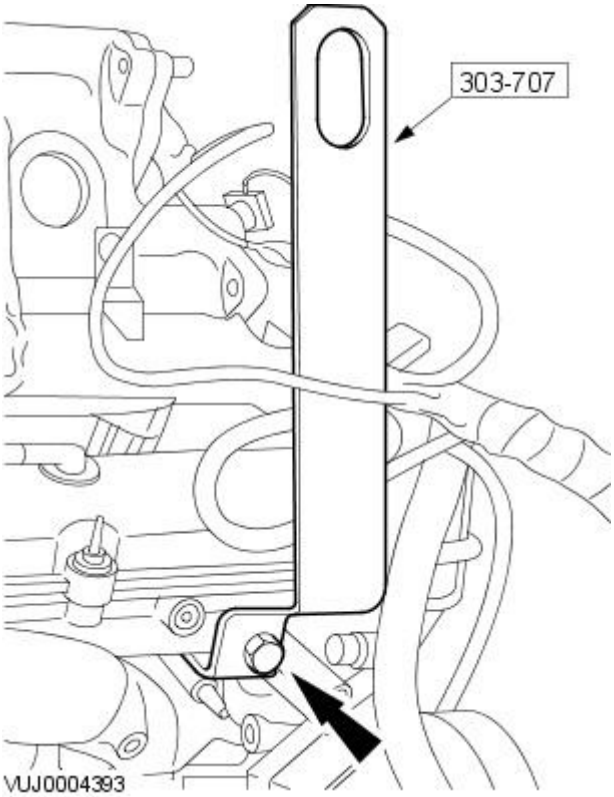

65. Install the special tool.

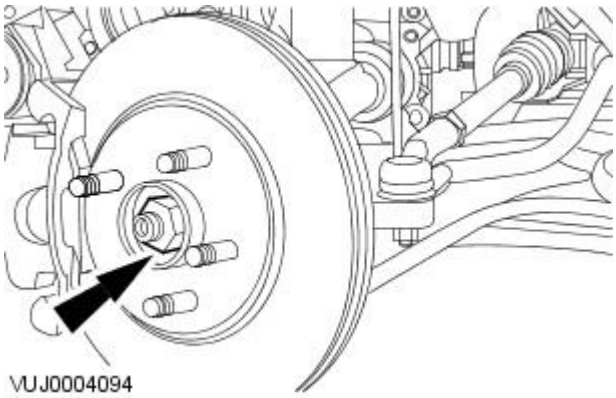

66. NOTE: Left-hand shown, right-hand similar.

Remove the front wheel hub retaining nuts.

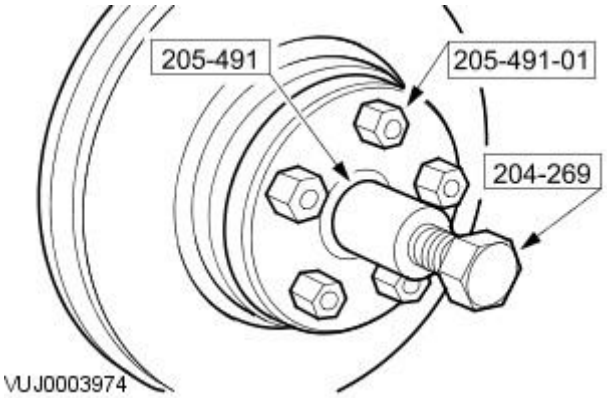

67. NOTE: Left-hand shown, right-hand similar.

Using the special tools, detach the halfshafts.

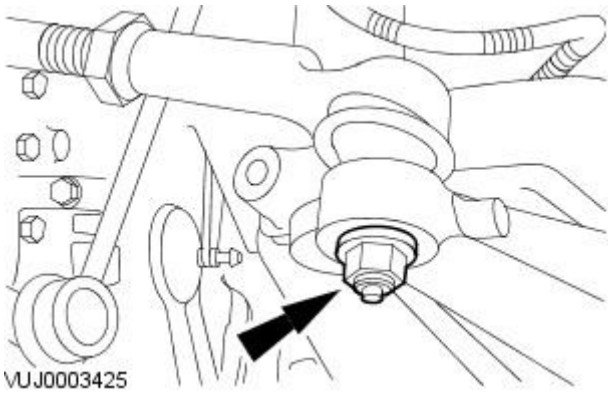

68. NOTE: Left-hand shown, right-hand similar.

Remove the tie rod end retaining nuts.

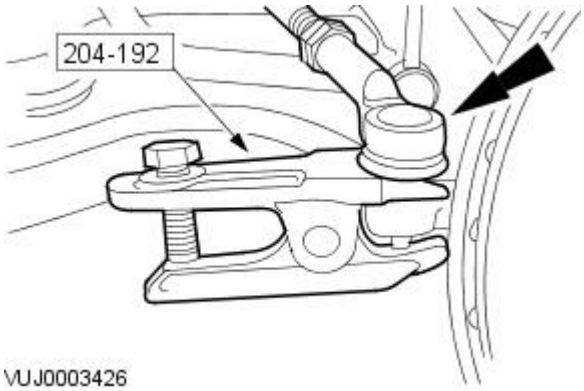

69. NOTE: Right-hand shown, left-hand similar.

Using the special tool, detach the tie rod ends.

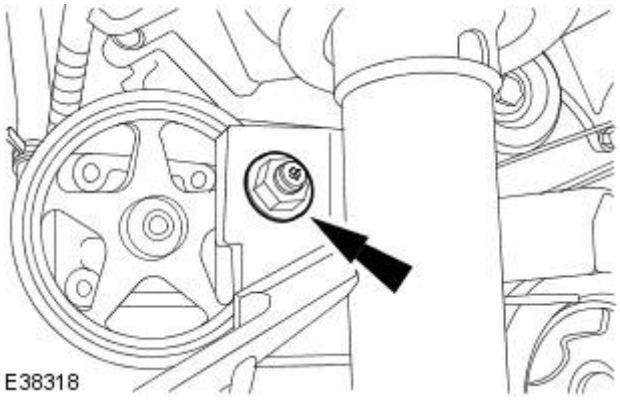

70. NOTE: Right-hand shown, left-hand similar.

Detach the stabilizer bar link arms.

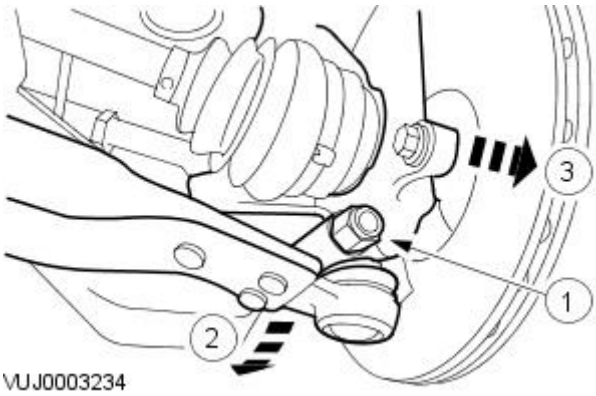

71. NOTE: Left-hand shown, right-hand similar.

Detach the wheel knuckles.

1. Remove the lower arm ball joint retaining bolt.
2. Reposition the lower arm.
3. Detach the wheel knuckles.

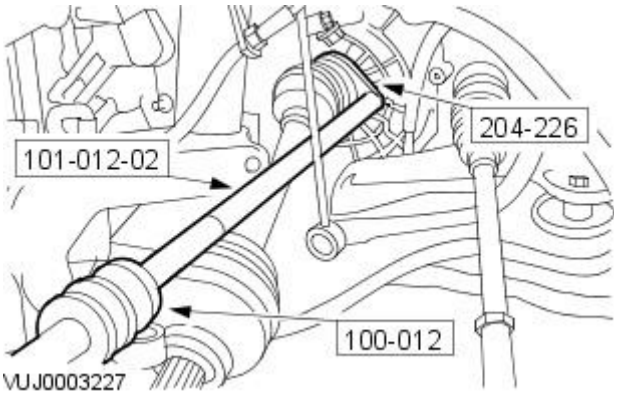

72. Using the special tools, remove the left-hand halfshaft.

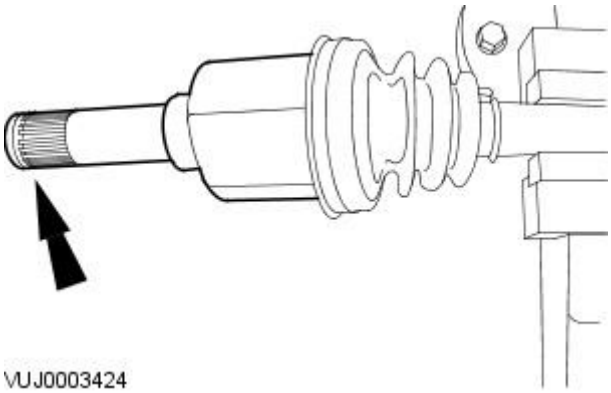

73. Remove and discard the halfshaft snap ring.

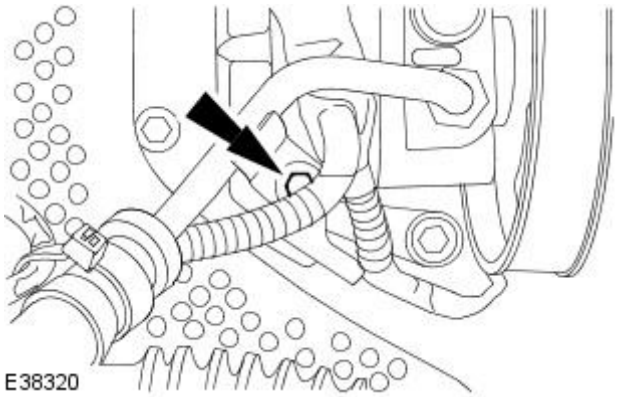

74. Remove the power steering high-pressure pipe retaining bolt.

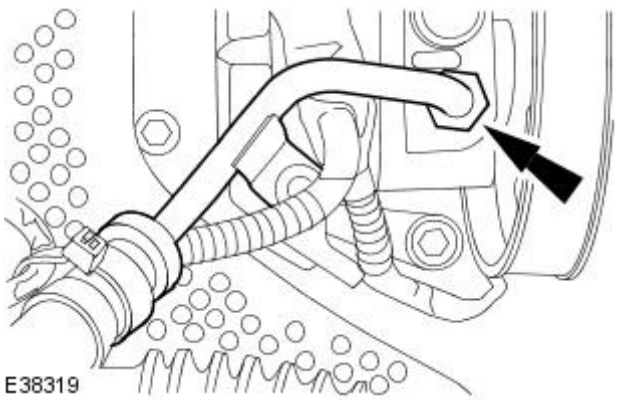

75. Disconnect the power steering high-pressure pipe.

- Remove and discard the O-ring seal.

76. Install the special tool.

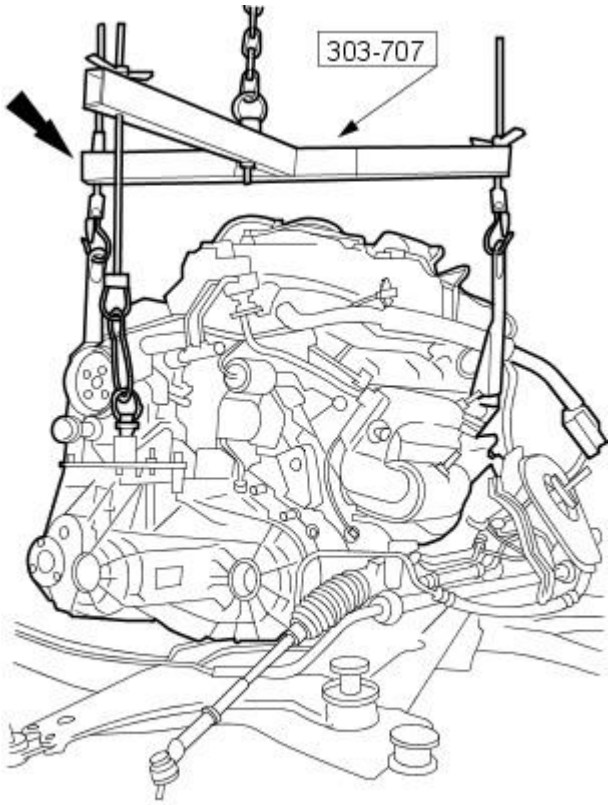

VUJ0004404

77. Remove the engine roll restrictor retaining bolt.

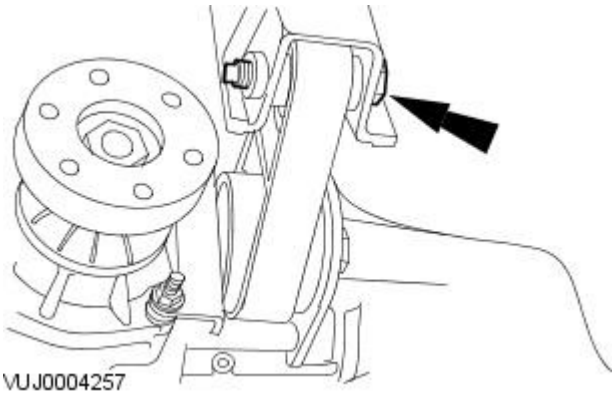

VUJ0004257

78. Remove the engine roll restrictor.

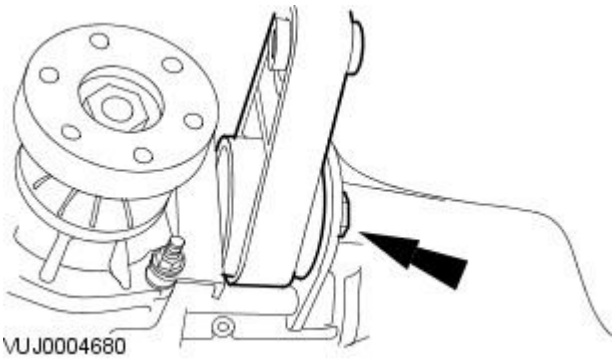

VUJ0004680

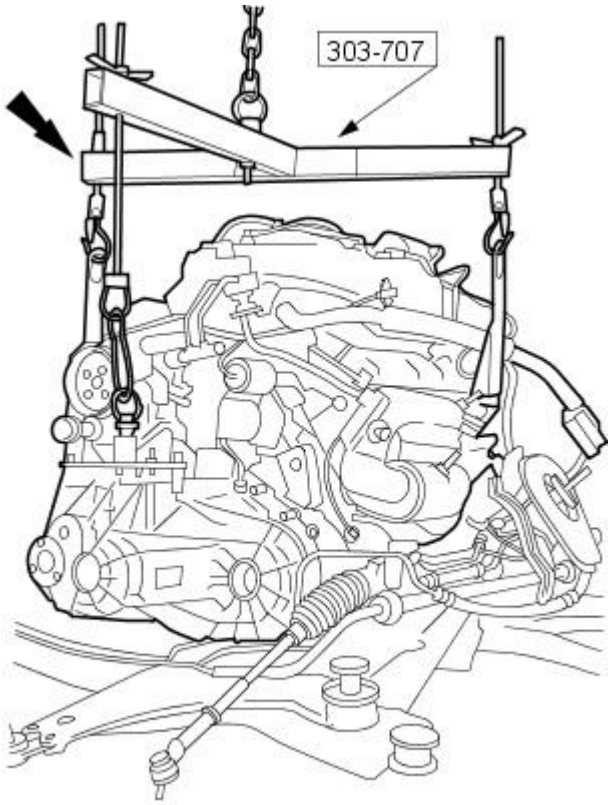

VUJ0004404

79. CAUTION: Make sure the right-hand drive halfshaft is supported, failure to follow this instruction may result in damage to the component.

Using the special tool, remove the engine and transaxle from the subframe.

Vehicles with 2.0L engine

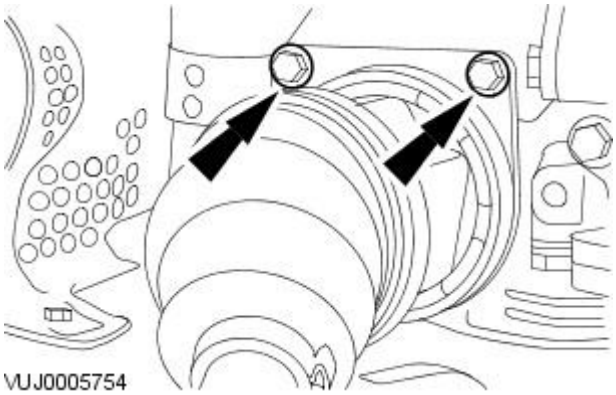

VUJ0005754

80. Remove the halfshaft and intermediate shaft assembly.

- Remove the intermediate shaft bearing carrier retaining bolts.

Vehicles with 2.5L or 3.0L engine

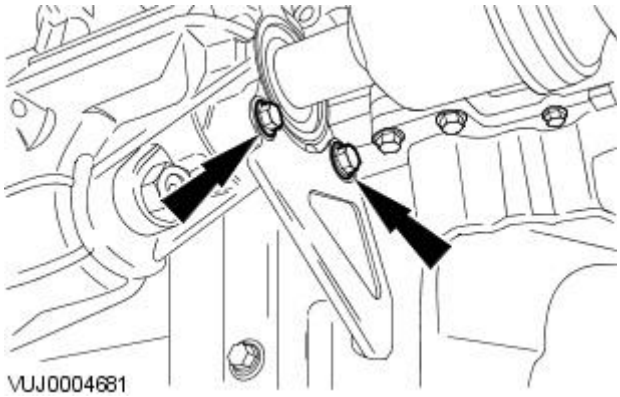

VUJ0004681

81. Remove the transfer case Y bracket retaining bolts.

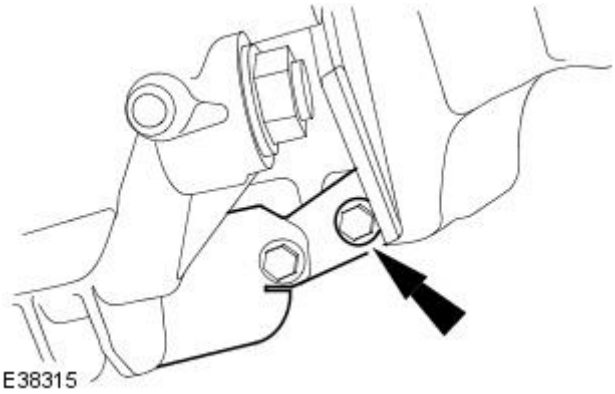

82. Remove the transfer case Y bracket.

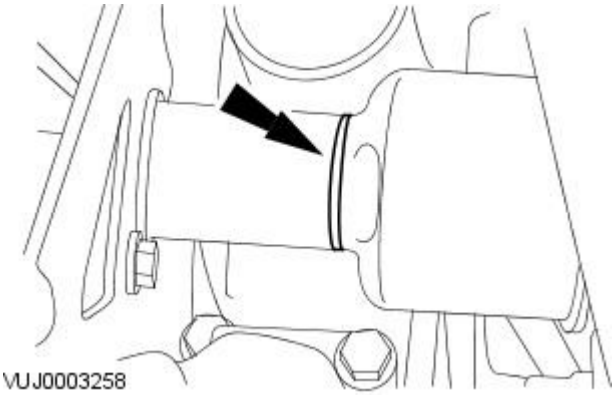

83. Remove the halfshaft seal.

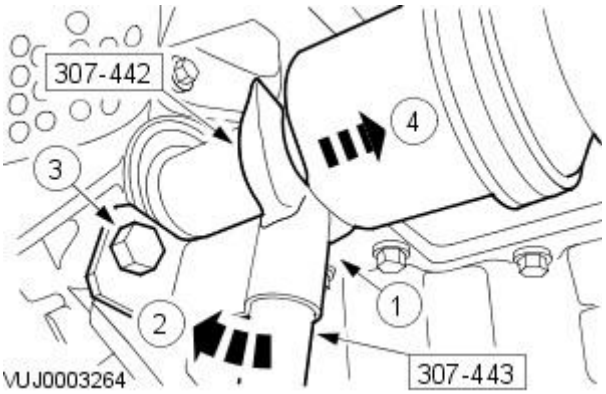

84. CAUTION: To prevent damage to the transfer case internal seal, make sure the link shaft is not retracted further that 200 mm (7.87 inches) from the transfer case.

Using the special tools, remove the halfshaft.

1. Attach the special tools to the halfshaft.
2. Lever the special tools, to detach the halfshaft.
3. Install the transfer case Y bracket retaining bolt.
4. Remove the halfshaft.

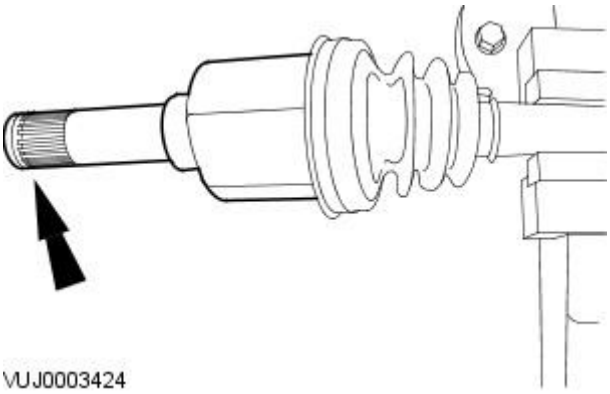

85. Remove and discard the halfshaft snap ring.

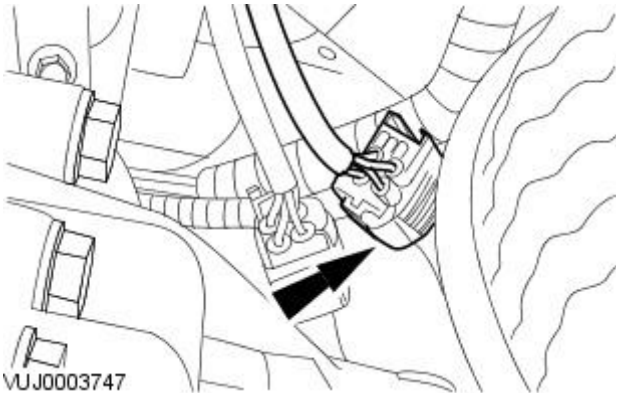

86. Disconnect the right-hand catalyst monitor sensor electrical connector.

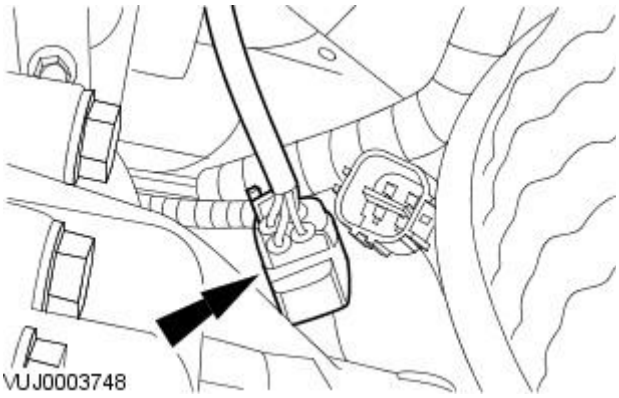

87. Disconnect the right-hand heated oxygen sensor (HO2S) electrical connector.

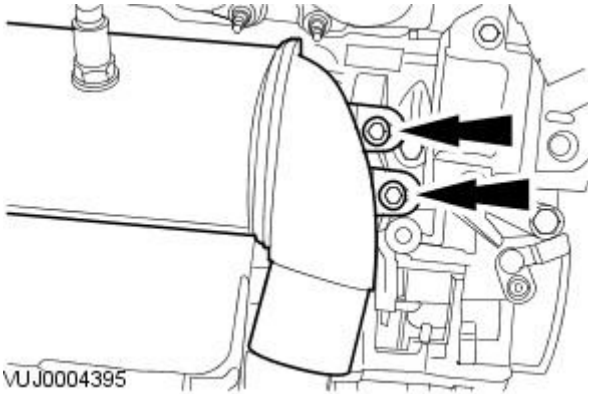

88. Remove the right-hand catalytic converter retaining bolts.

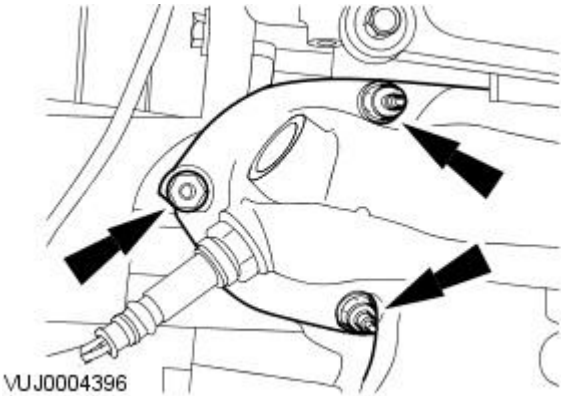

89. Remove the right-hand catalytic converter.

- Remove and discard the retaining nuts.

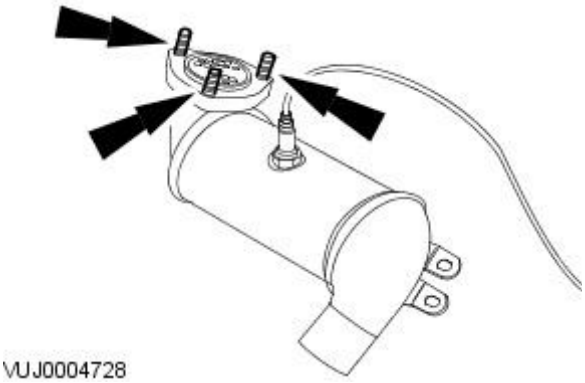

90. Remove and discard the catalytic converter retaining studs.

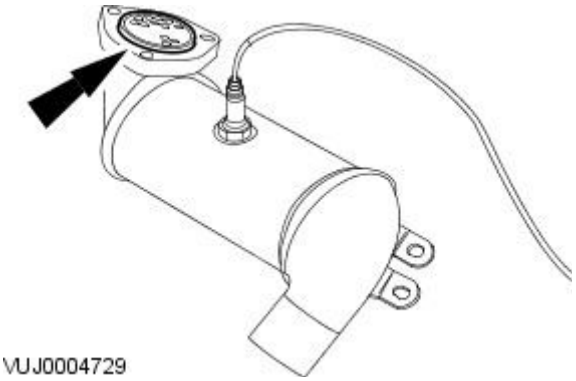

91. Remove and discard the catalytic converter sealing ring.

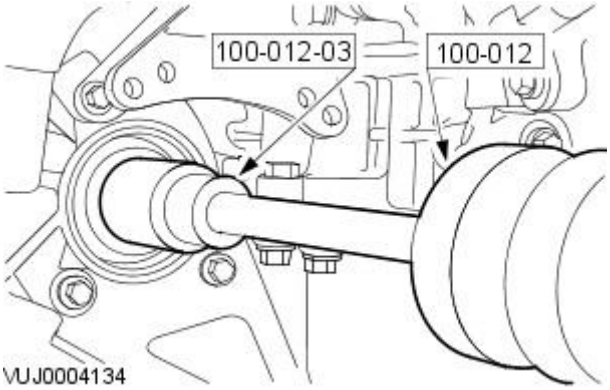

92. Using the special tool, detach the transfer case link shaft.

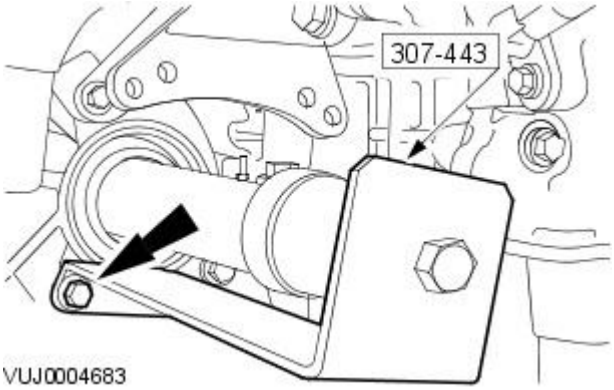

93. CAUTION: To prevent damage to the transfer case internal seal, make sure the link shaft is not retracted further that 200 mm (7.87 inches) from the transfer case.

Using the special tool, partially remove transfer case link shaft.

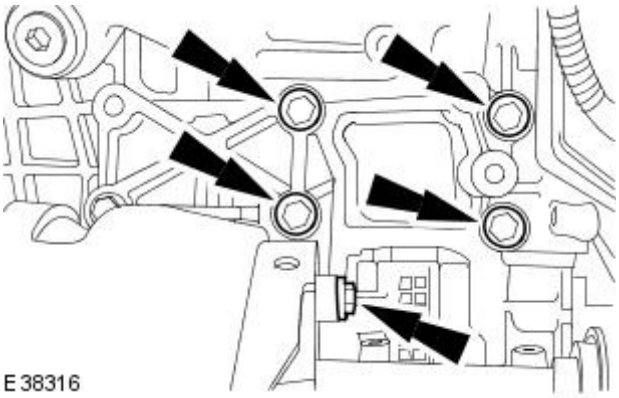

94. Remove the catalytic converter mounting bracket.

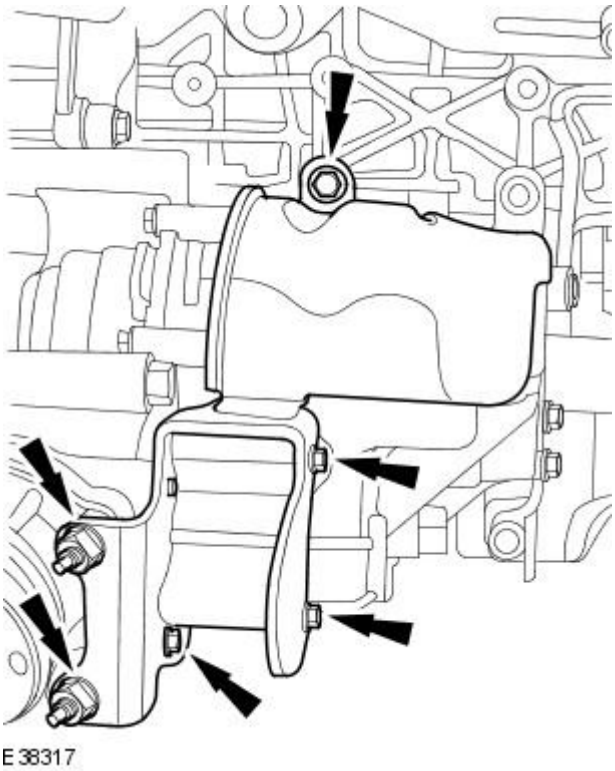

95. Remove the transfer case mounting bracket.

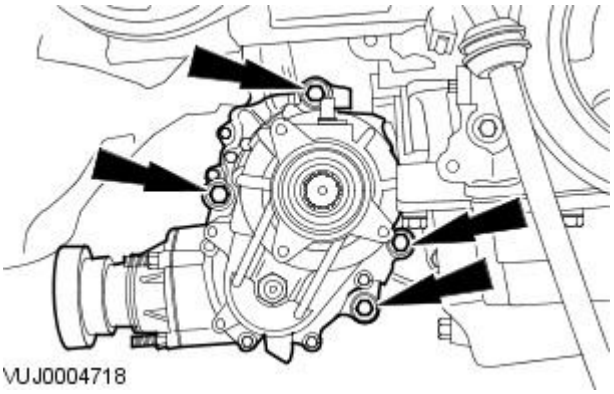

96. Remove the transfer case.

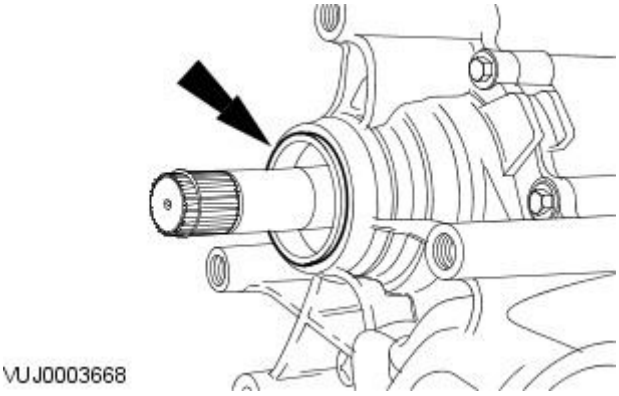

97. Remove and discard the transfer case O-ring seal.

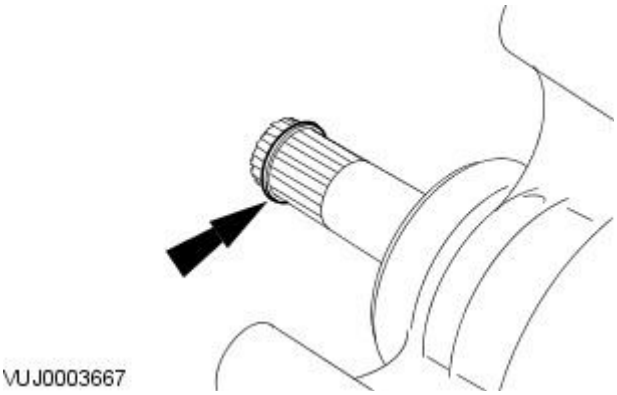

98. Remove and discard the link shaft snap ring.

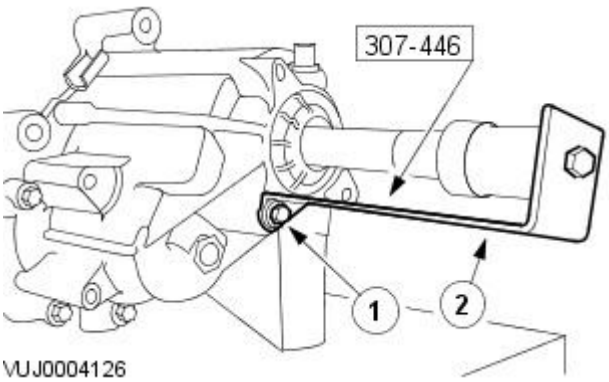

99. Remove the link shaft limiting tool.

1. Remove the retaining bolt.
2. Remove the link shaft limiting tool.

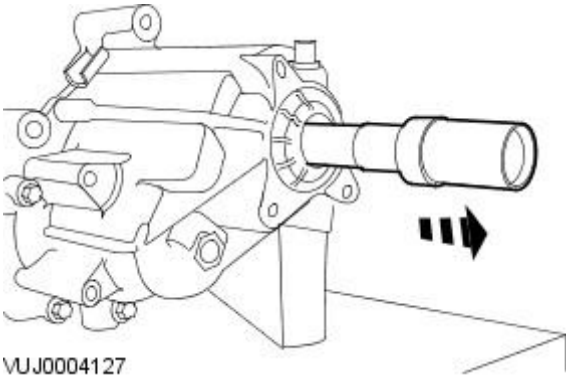

100. Remove the link shaft.

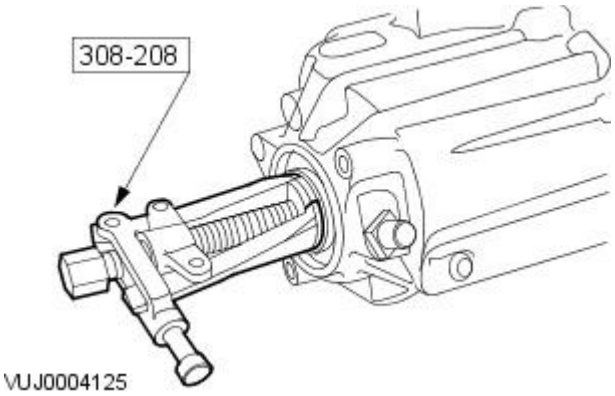

101. Using the special tool, remove and discard the link shaft oil seal.

All vehicles

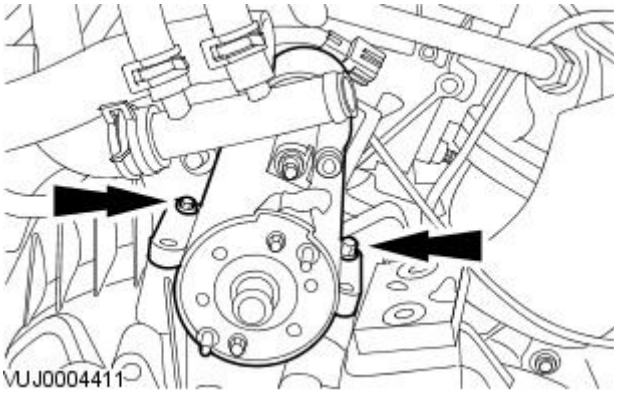

102. Remove the starter motor.

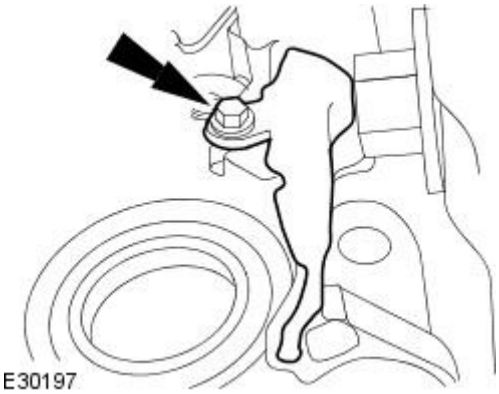

103. Remove the dust cover.

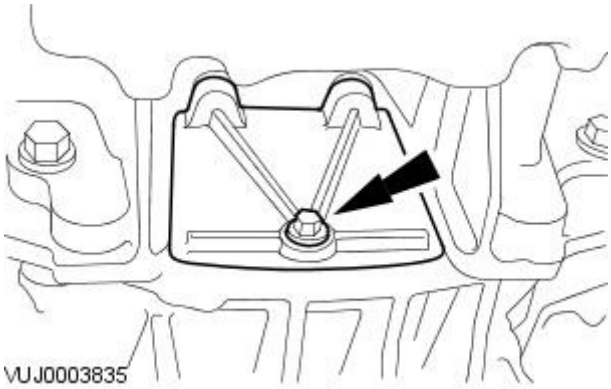

104. Remove the access cover.

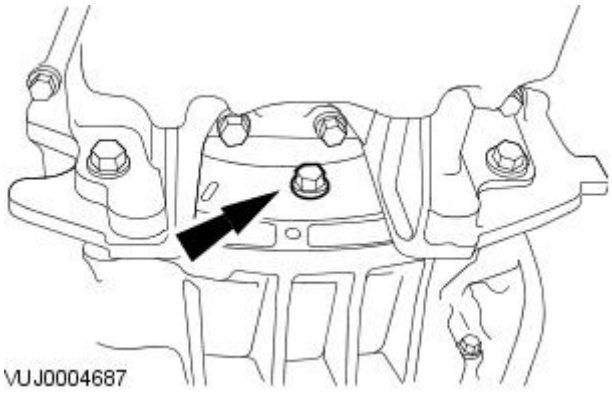

105. NOTE: Rotate the torque converter to gain access to the remaining retaining bolts.

Remove the torque converter retaining bolts.

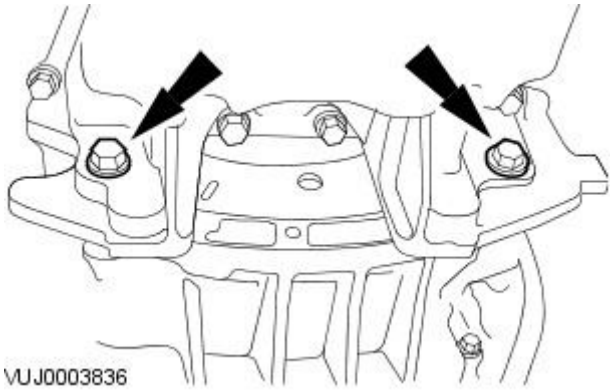

106. Remove the transaxle retaining bolts.

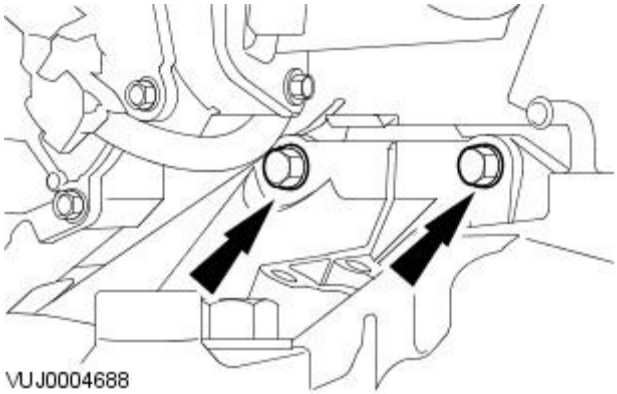

107. Remove the transaxle retaining bolts.

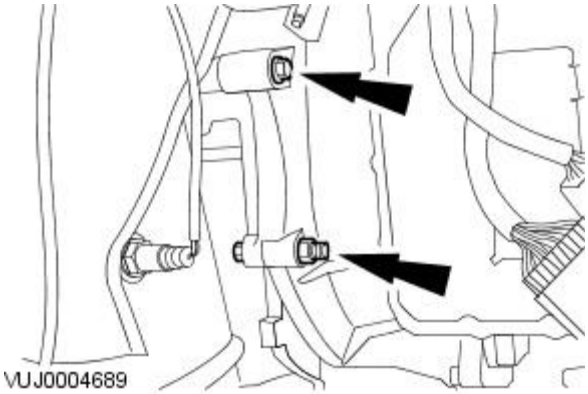

108. Remove the transaxle retaining bolts.

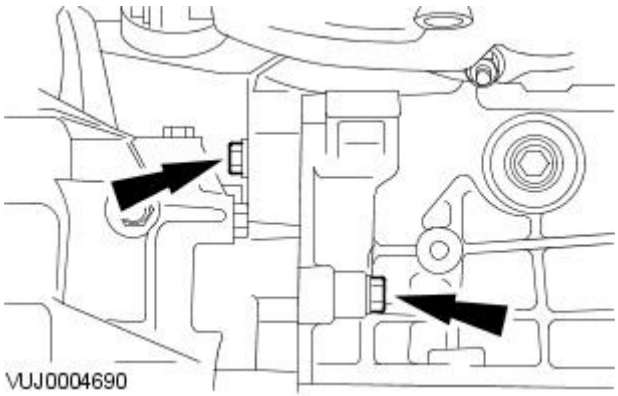

109. Remove the transaxle retaining bolts.

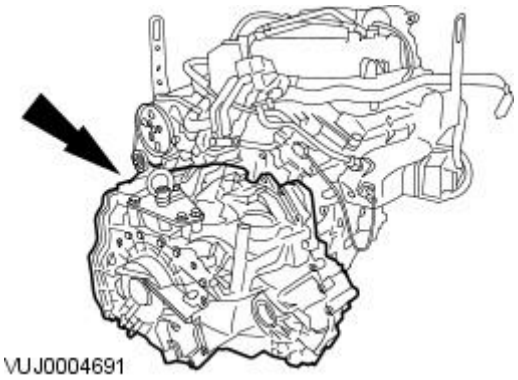

110. WARNING: Do not let the torque converter drop out of the transaxle. Failure to follow this instruction may result in personal injury.

Remove the transaxle.

Engine - 2.0L NA V6 - AJV6 / 2.5L NA V6 - AJV6 / 3.0L NA V6 - AJ27 - Engine

Disassembly

Special Tool(s)	
303D055	Wrench strap-universal 303-D055
303D121	Crankshaft Pulley Remover 303-D121
303102 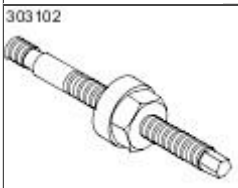 303102	Crankshaft Pulley Installer 303-102
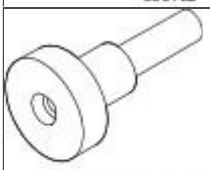 303D12101	Trust Pad 303-D121-01
303-335/2	Crankshaft pulley installer 303-335/2

Disassembly

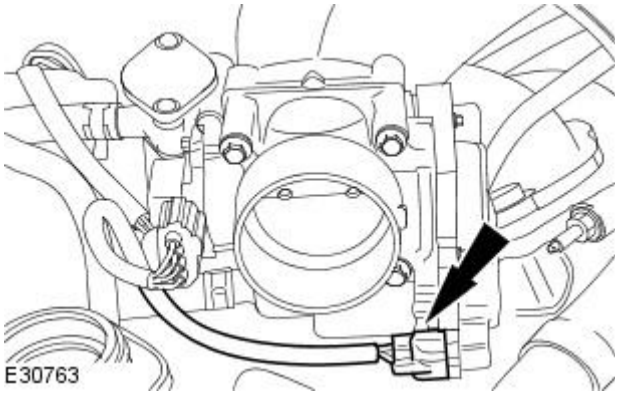

1. Disconnect the throttle motor electrical connector.

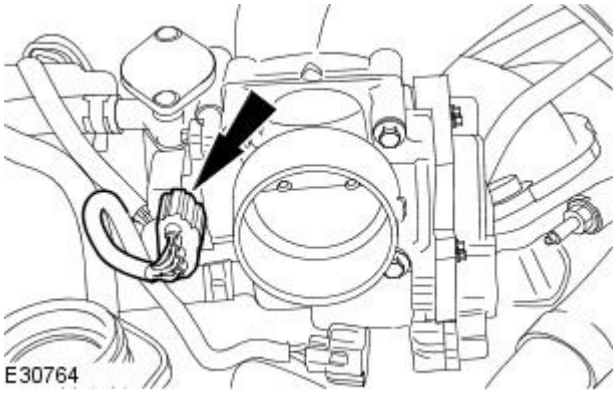

2. Disconnect the throttle position sensor.

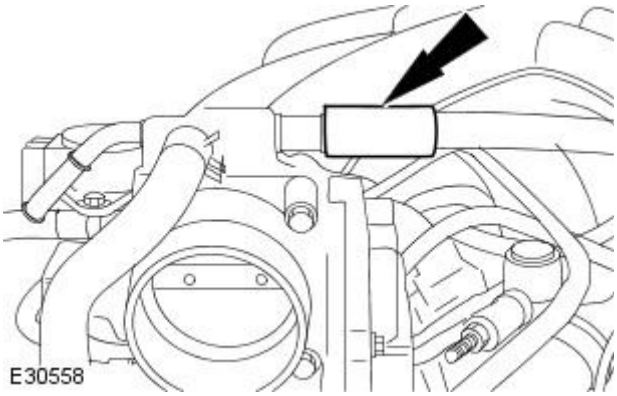

3. Disconnect the positive crankcase ventilation (PCV) hose.

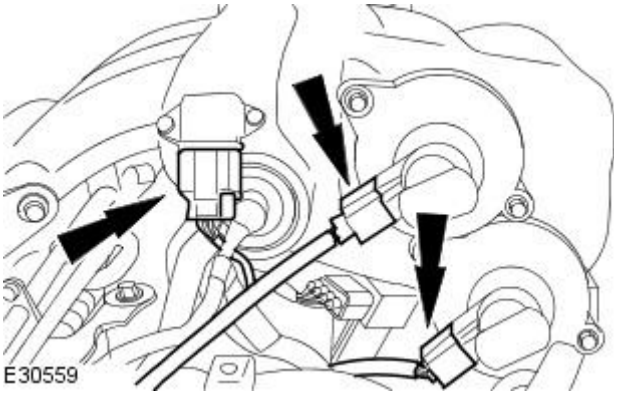

4. Disconnect the electrical connectors.

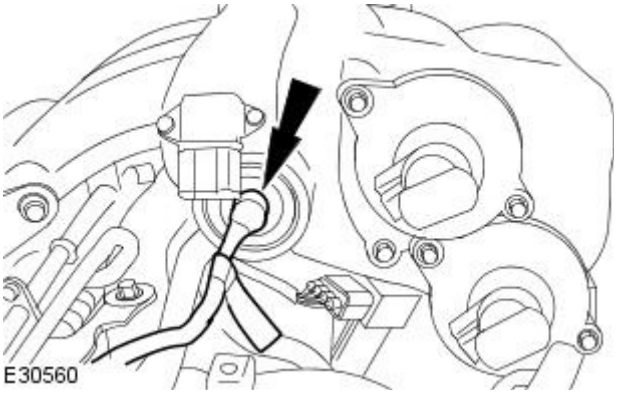

5. Disconnect the fuel pressure regulator vacuum hose.

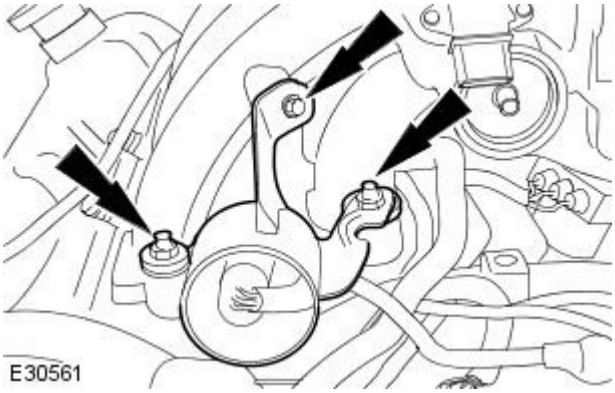

6. Remove the fuel pressure regulator bracket.

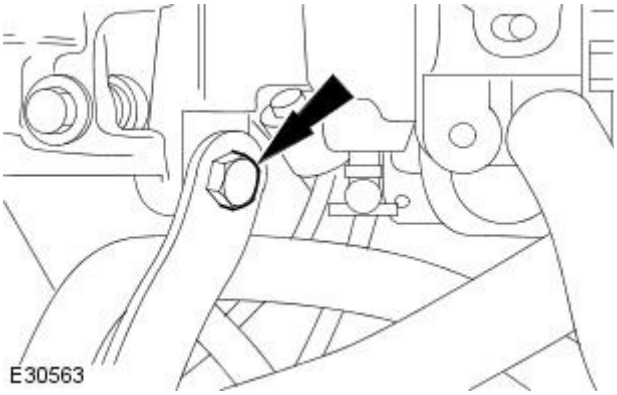

7. Detach the intake manifold front retaining bracket.

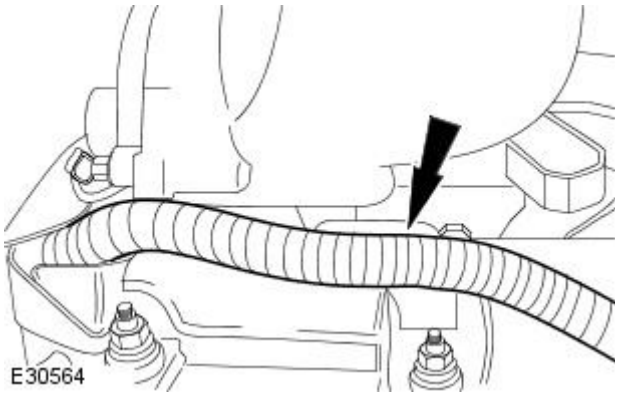

8. Detach the engine wiring harness from the intake manifold rear retaining bracket.

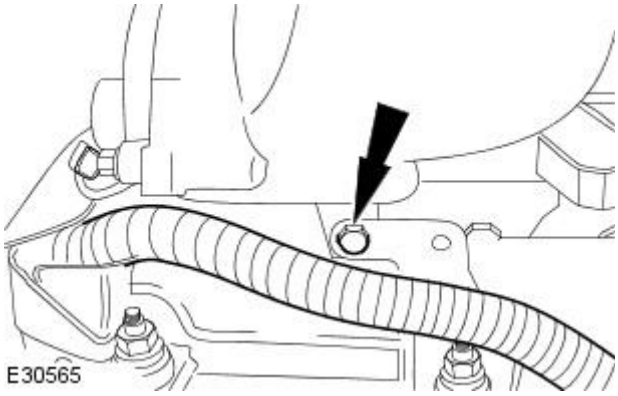

9. Detach the intake manifold rear retaining bracket.

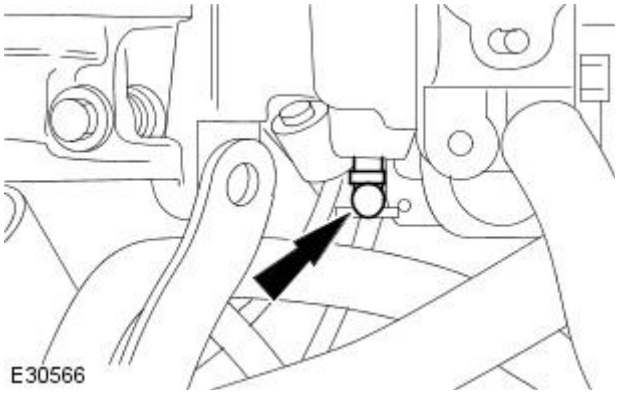

10. NOTE: The evaporative emission canister purge valve transfer pipe is attached to the induction manifold by a quick release coupling.

Disconnect the evaporative emission canister purge valve transfer pipe.

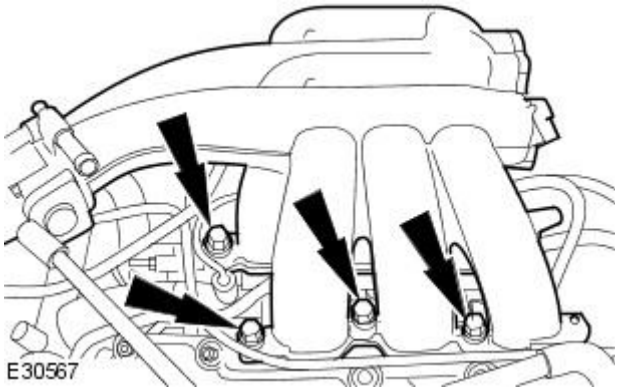

11. Remove the intake manifold.

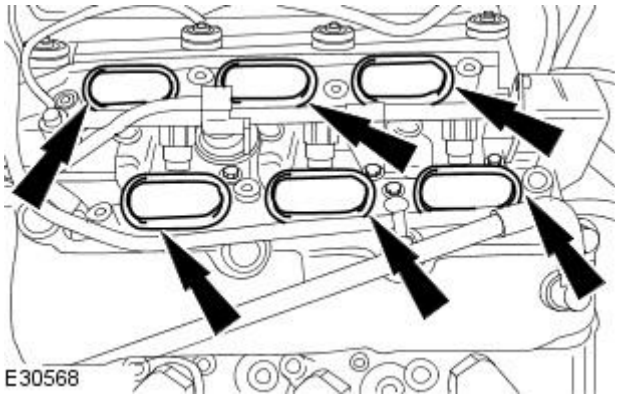

12. Remove and discard the intake manifold gaskets.

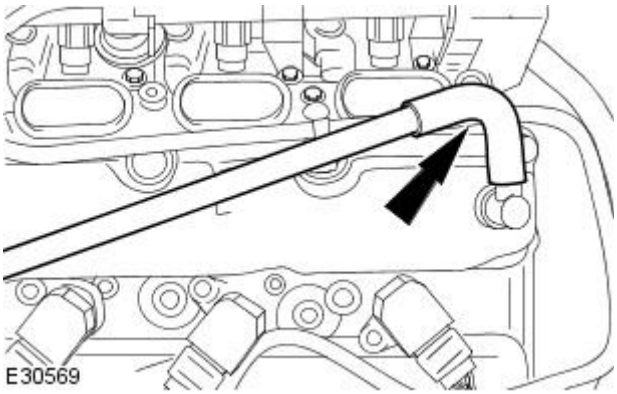

13. Remove the engine breather hose.

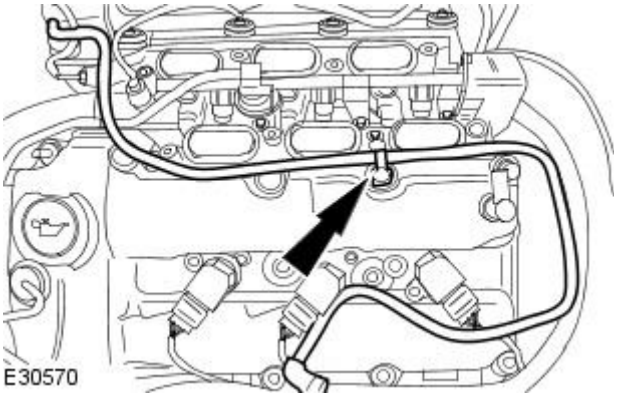

14. Remove the evaporative emission purge valve hose.

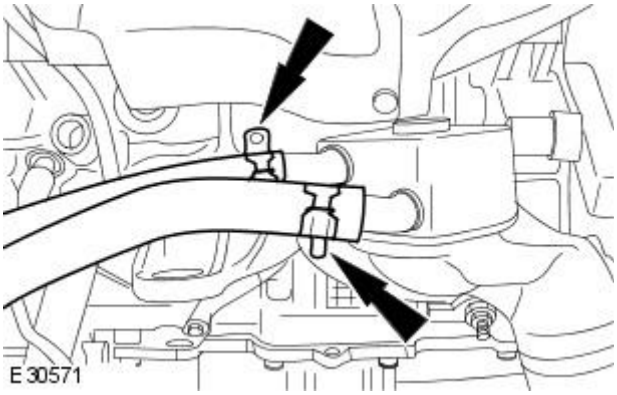

15. Disconnect the oil cooler coolant hoses.

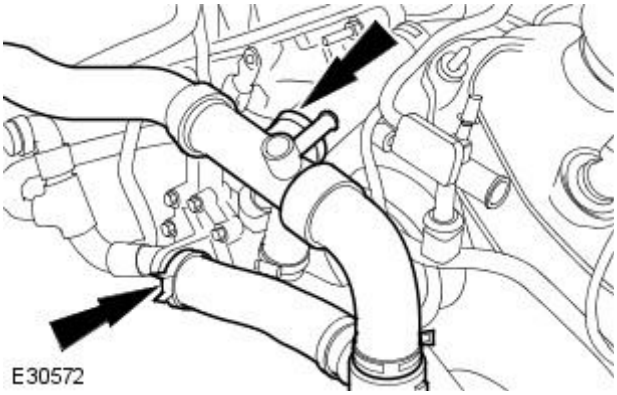

16. Remove the coolant hose.

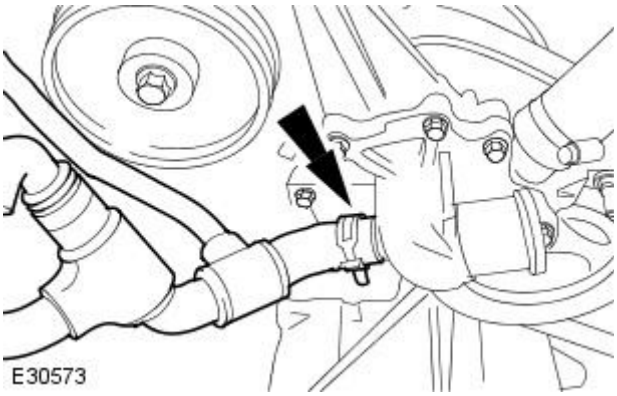

17. Remove the coolant hose.

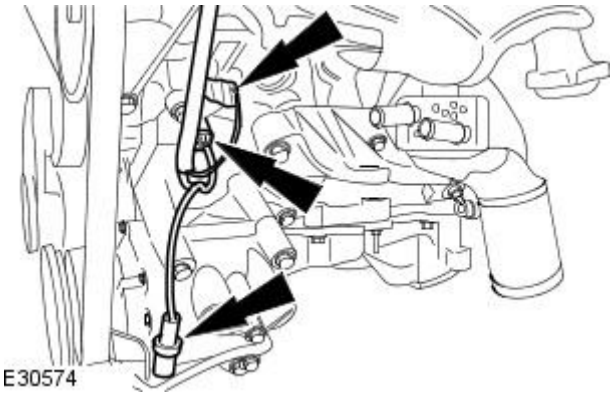

18. Disconnect the electrical connectors.

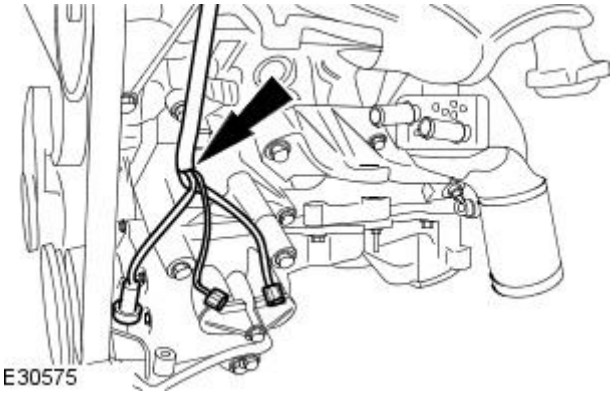

19. Detach the engine harness.

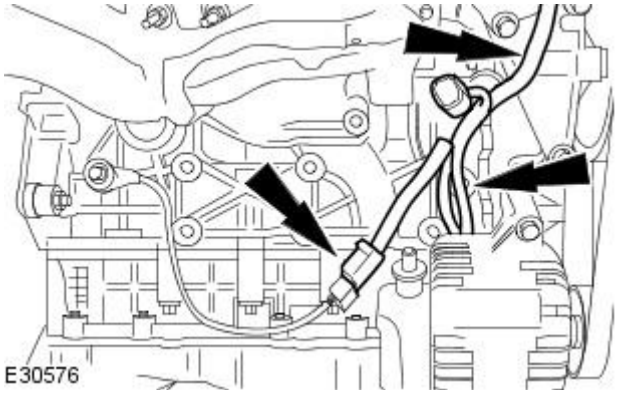

20. Detach engine harness.

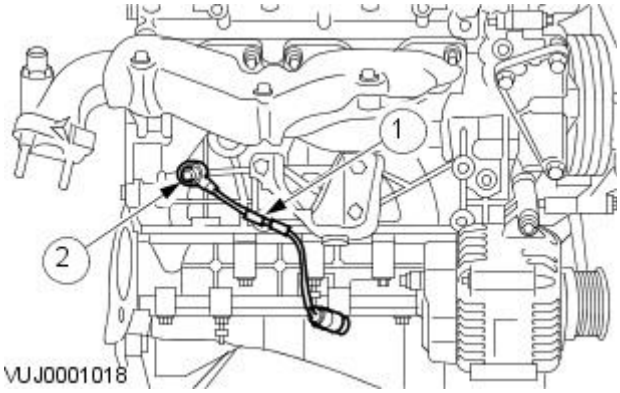

21. Remove the rear knock sensor.

1. Detach the knock sensor wiring harness.
2. Remove the rear knock sensor.

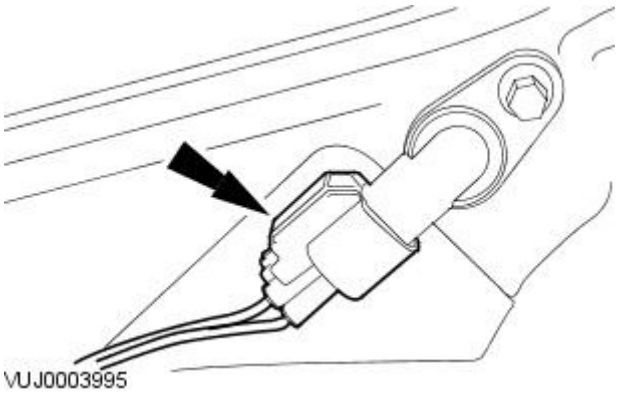

22. Disconnect the right-hand camshaft position sensor.

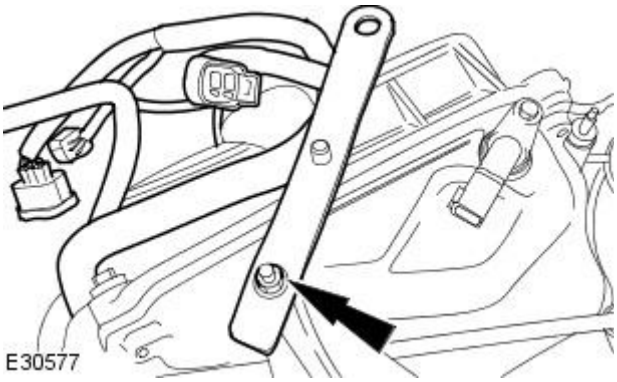

23. Detach the engine harness retaining bracket.

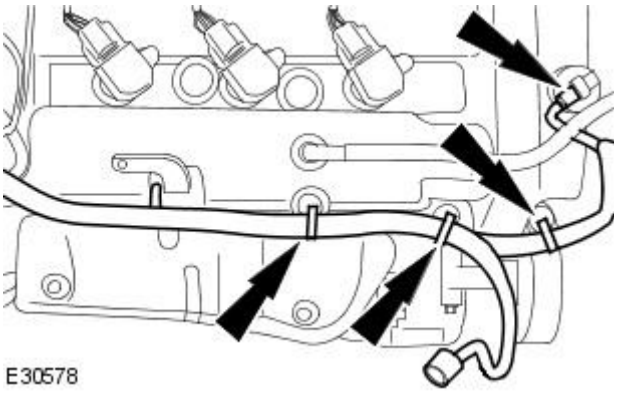

24. Detach the engine harness.

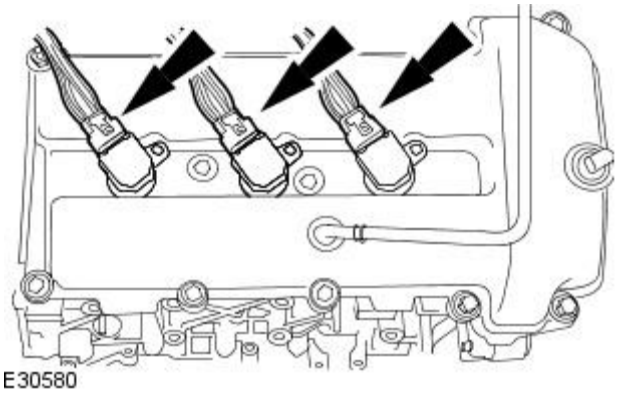

25. Disconnect the right-hand ignition coils.

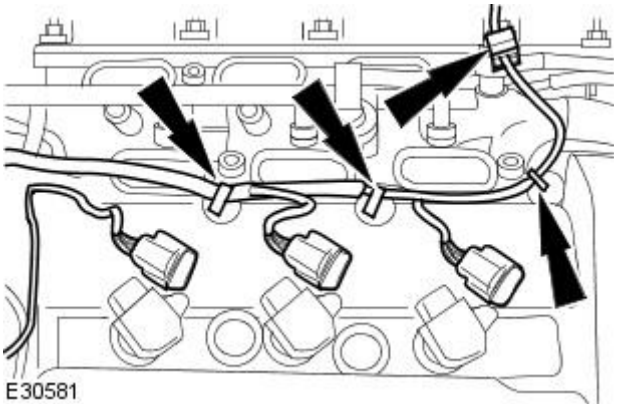

26. Detach the engine harness.

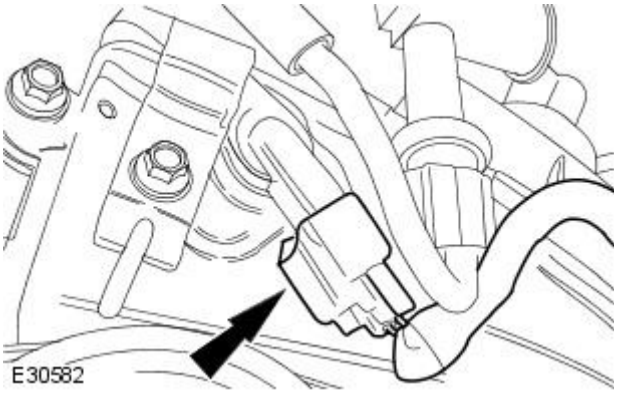

27. Disconnect the left-hand camshaft position sensor.

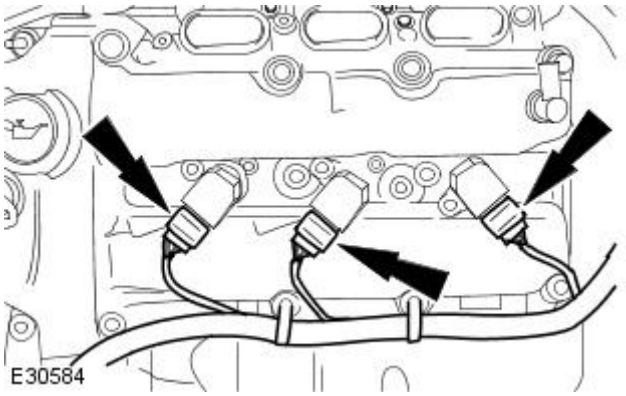

28. Disconnect the left-hand ignition coils.

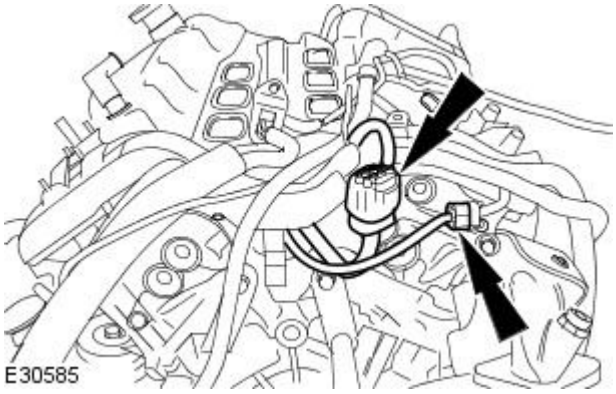

29. Disconnect the engine wiring harness electrical connectors.

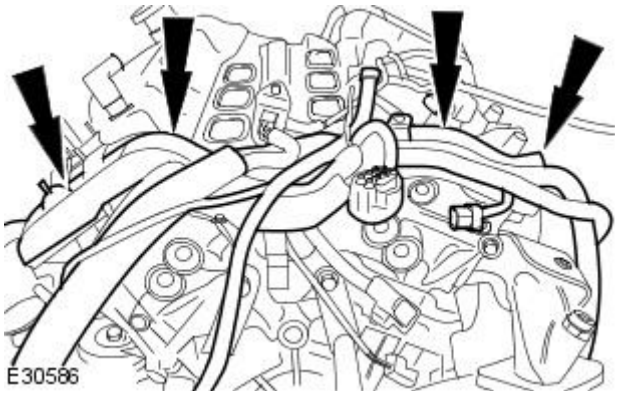

30. Remove the engine wiring harness.

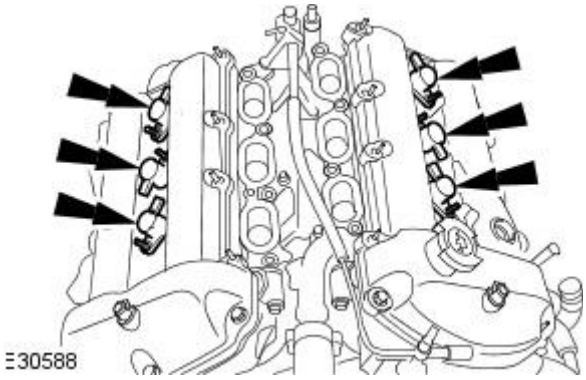

31. Remove the ignition coils.

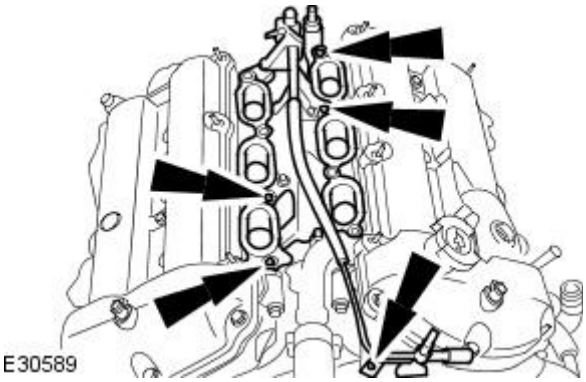

32. Remove the lower intake manifold and injector supply manifold.

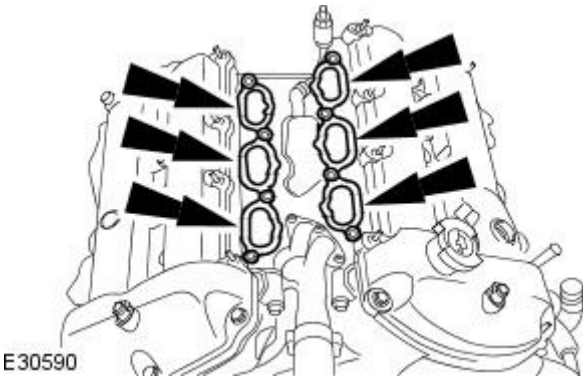

33. Remove and discard the lower intake manifold gaskets.

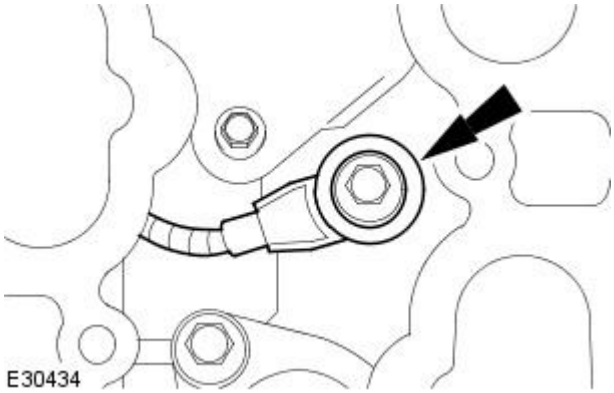

34. Remove the left-hand knock sensor.

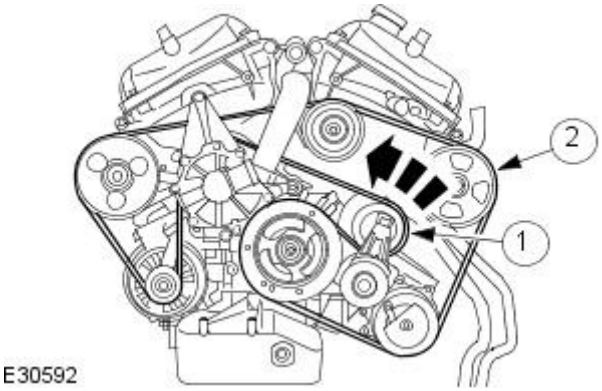

35. Remove the accessory drive belt.

1. Use a 3/8 inch drive bar to release the accessory drive belt tensioner.
2. Remove the accessory drive belt.

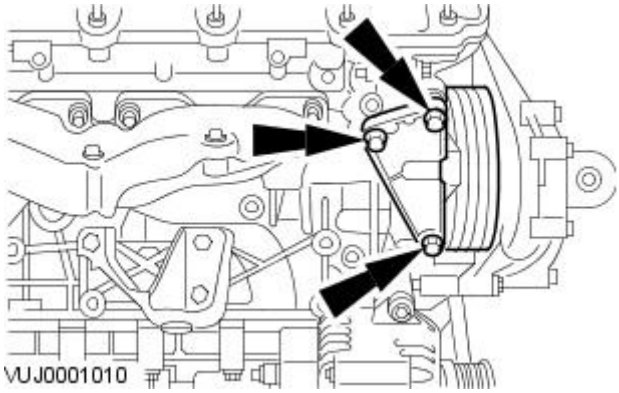

36. Remove the right-hand idler pulley.

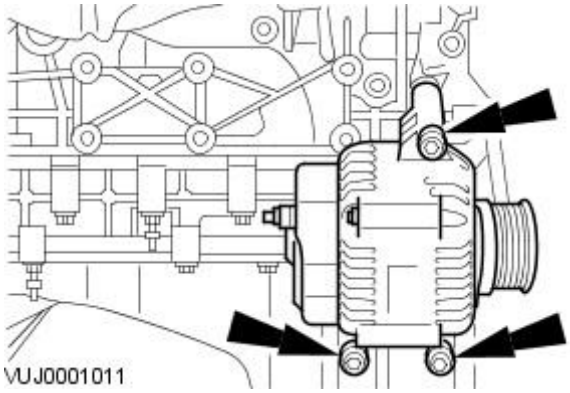

37. Remove the generator.

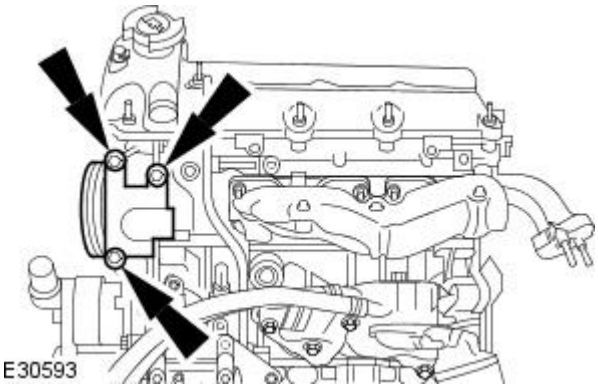

38. Remove the power steering pump.

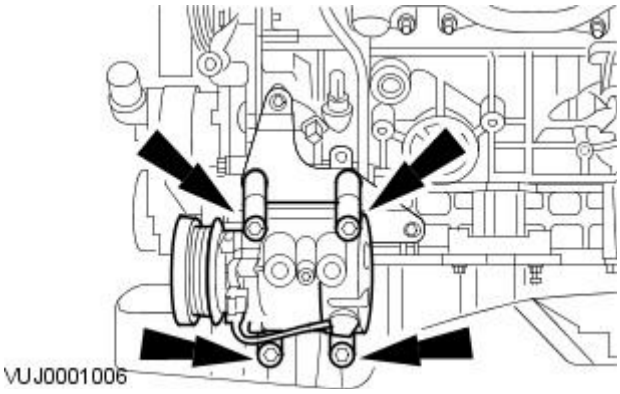

39. Remove the air conditioning (A/C) compressor.

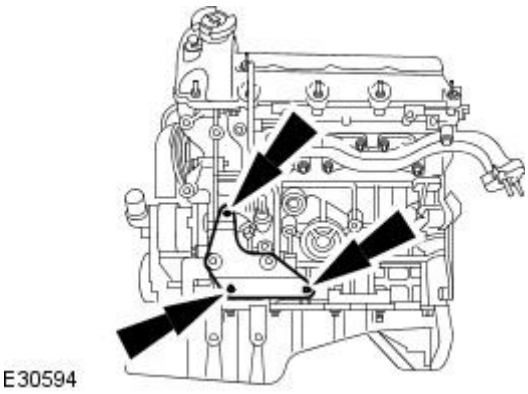

40. Remove the A/C compressor mounting bracket.

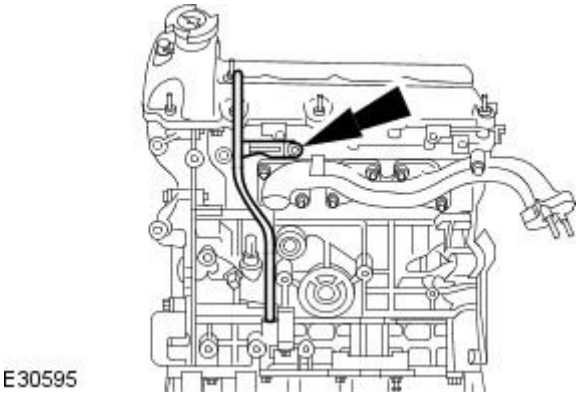

41. Remove the oil level indicator tube.

1. Remove and discard the O-ring seal.

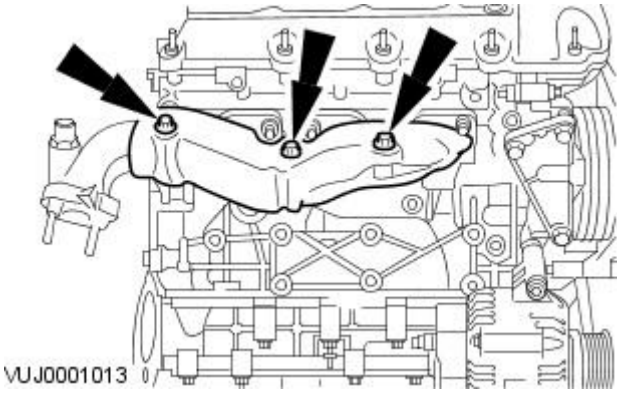

42. NOTE: Right-hand shown, Left-hand similar.

Remove the exhaust manifold heat shields.

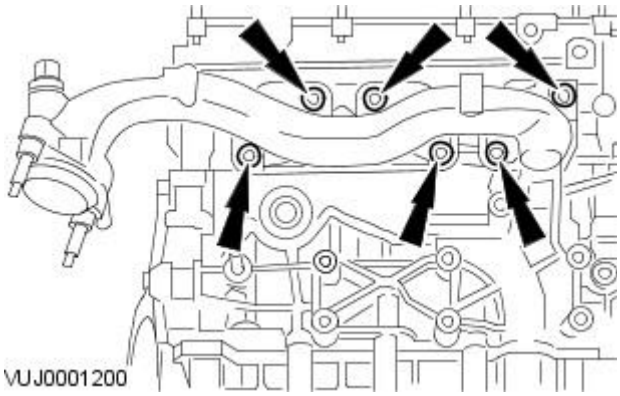

43. NOTE: Right-hand shown, Left-hand similar.

Remove the exhaust manifolds.

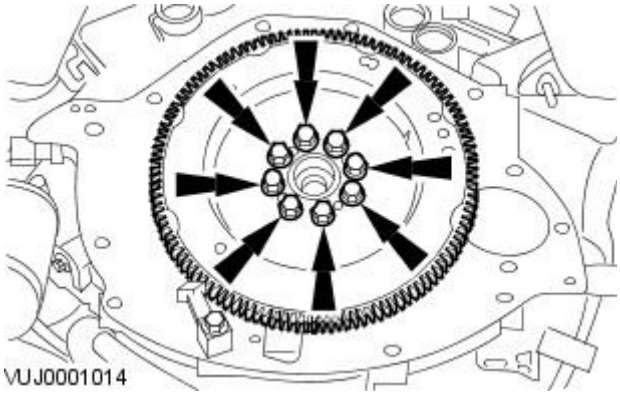

44. Remove the flywheel.

- Prevent the engine from rotating.

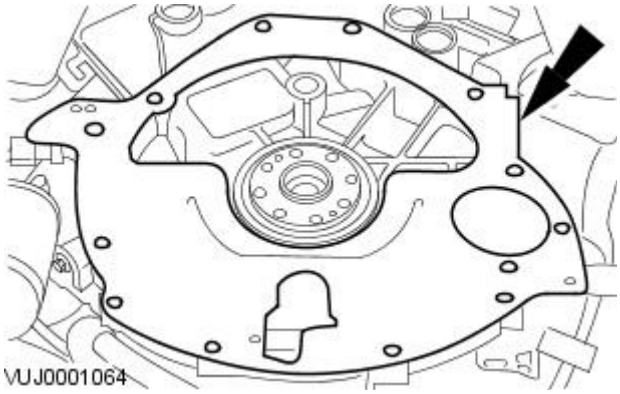

45. Remove the engine rear backing plate.

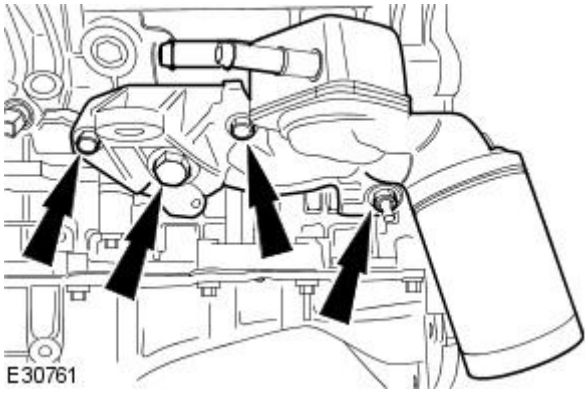

46. Remove the oil filter housing assembly.

- Remove and discard the O-ring seal.

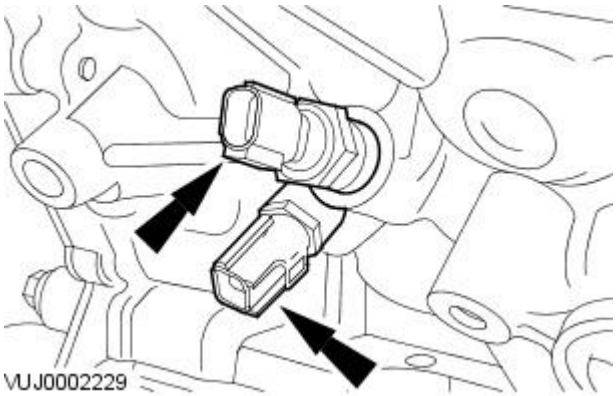

47. Remove the engine oil pressure and oil temperature sensors.

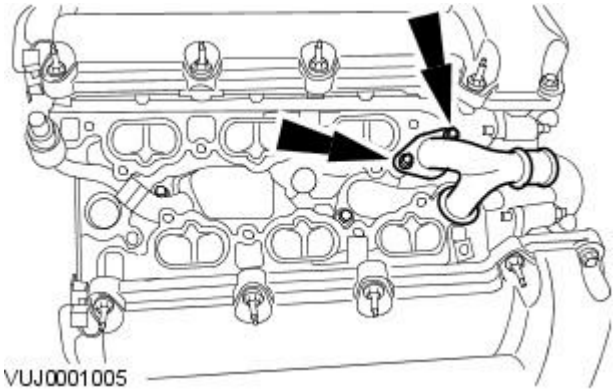

48. Remove the coolant crossover tube.

- Remove and discard the O-ring seals.

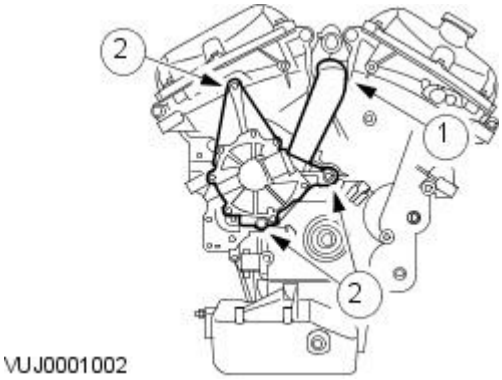

49. Remove the water pump and coolant hose assembly.

1. Detach the hose.
2. Remove the water pump and coolant hose assembly.

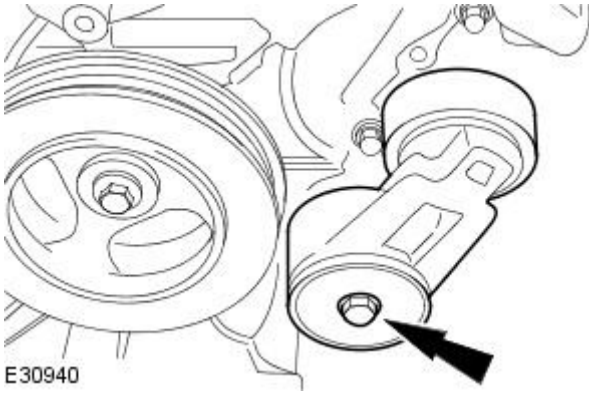

50. Remove the accessory drive belt tensioner.

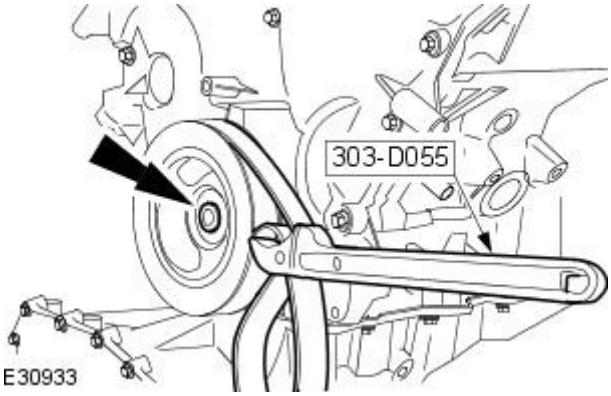

51. Install the special tool, loosen the crankshaft pulley retaining bolt.

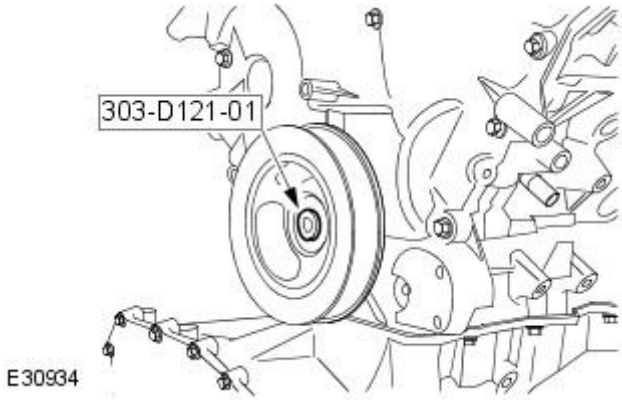

52. Install the special tool.

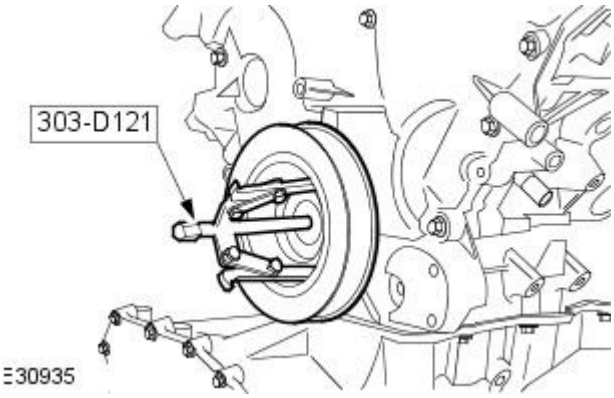

53. Using the special tool, remove the crankshaft vibration damper.

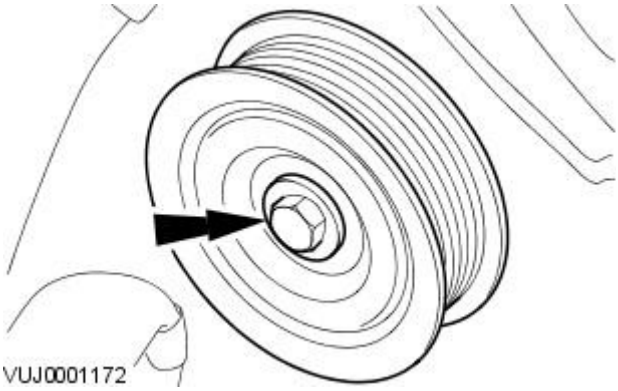

54. Remove the left-hand idler pulley.

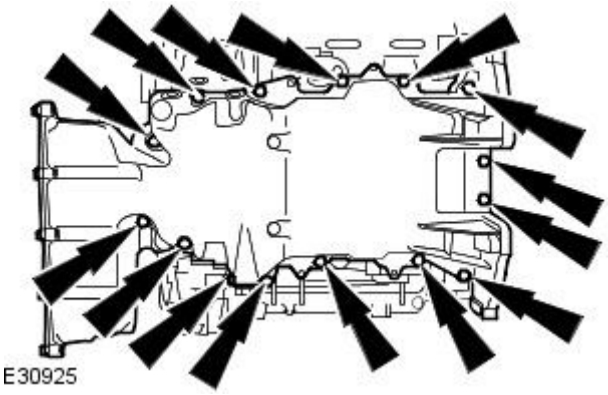

55. Remove the oil pan.

- Remove and discard the oil pan gasket.
- Clean and inspect the oil pan and cylinder block sealing surfaces using Metal surface cleaner or equivalent meeting Jaguar specification.

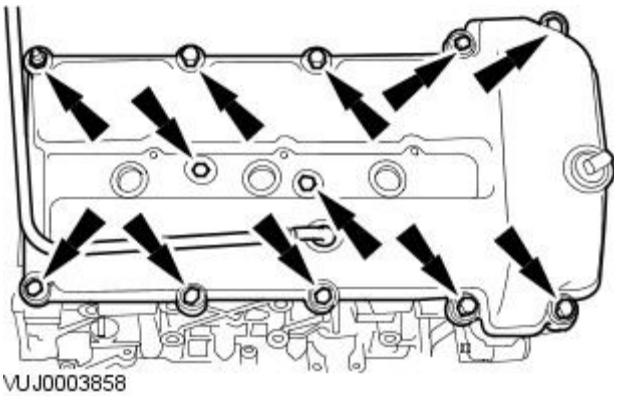

56. NOTE: Right-hand shown, left-hand similar.

Remove the valve covers.

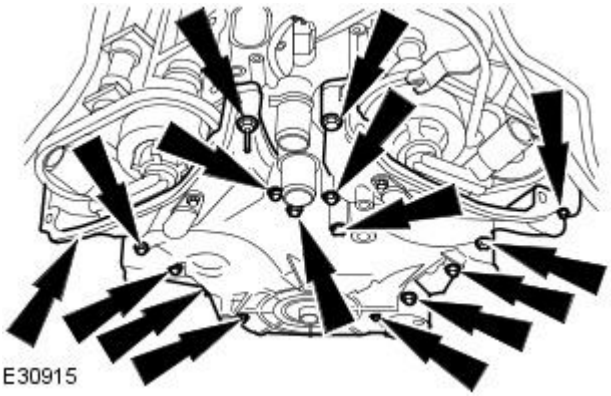

57. Remove the engine front cover

- Remove and discard the engine front cover gaskets.

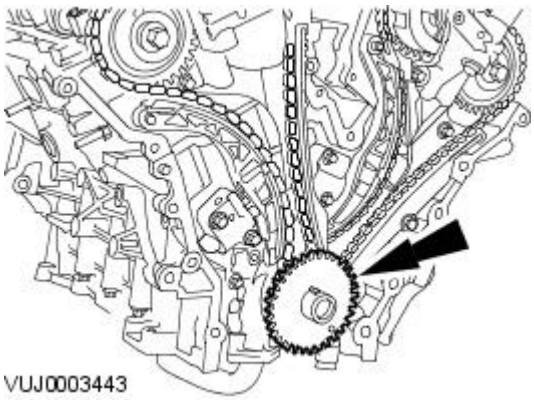

58. Remove the crankshaft position (CKP) sensor pulse wheel.

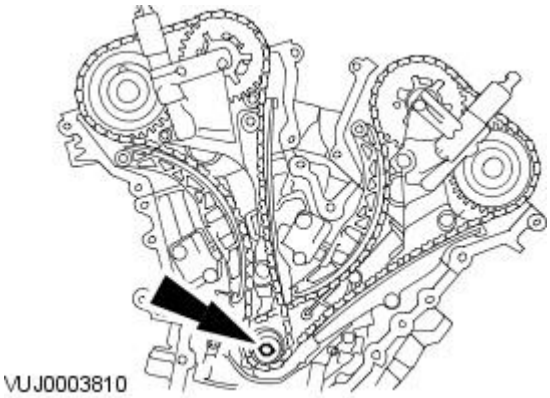

59. CAUTION: Do not rotate the crankshaft counterclockwise. The timing chains may bind causing engine damage.

Install the crankshaft pulley retaining bolt and washer.

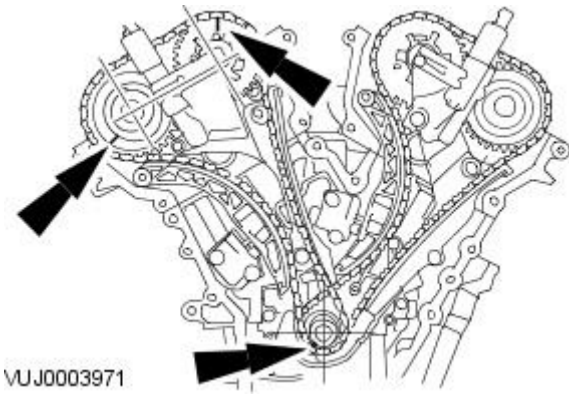

60. CAUTION: Do not rotate the crankshaft counterclockwise. The timing chains may bind causing engine damage.

Rotate the crankshaft clockwise until the crankshaft keyway is at the 7 O'clock position, the alignment mark on the right-hand intake camshaft sprocket is at the 1 O'clock position and the alignment mark on the right-hand exhaust camshaft sprocket is at the 8 O'clock position.

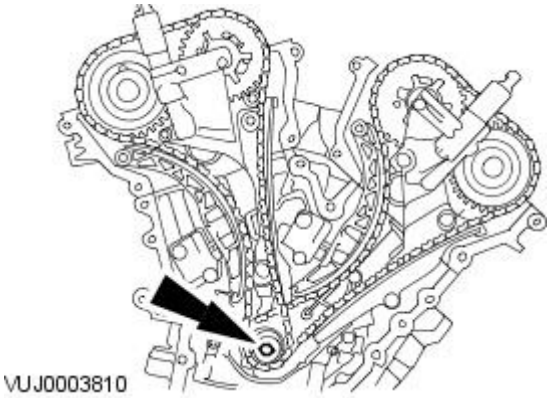

61. CAUTION: Do not rotate the crankshaft counterclockwise. The timing chains may bind causing engine damage.

Remove the crankshaft pulley retaining bolt and washer.

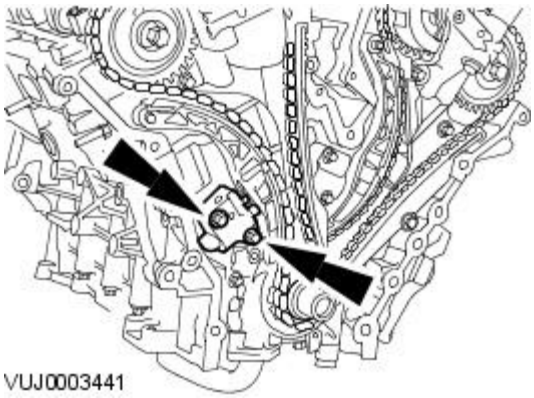

62. Remove the right-hand timing chain tensioner.

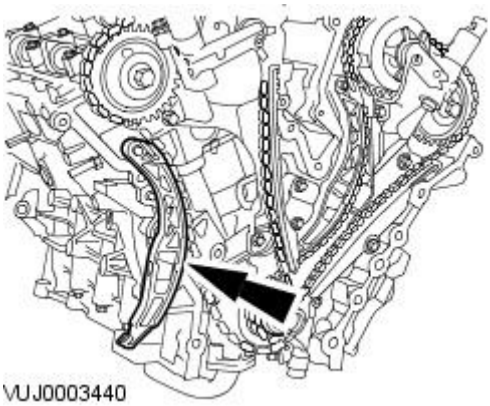

63. Remove the right-hand timing chain outer guide.

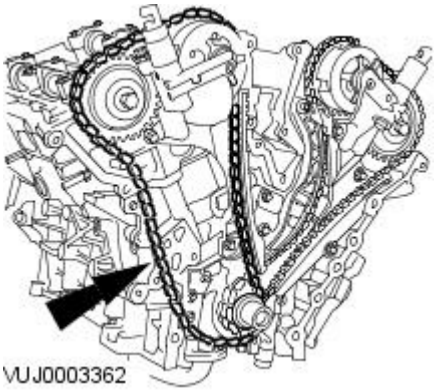

64. Remove the right-hand timing chain.

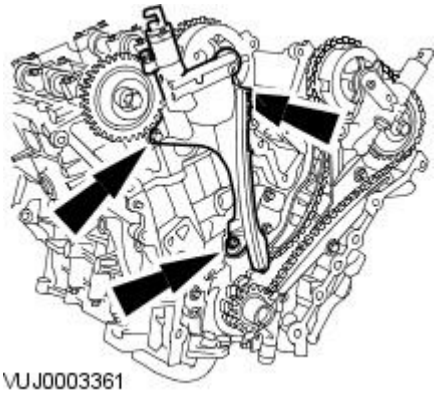

65. Remove the right-hand timing chain inner guide.

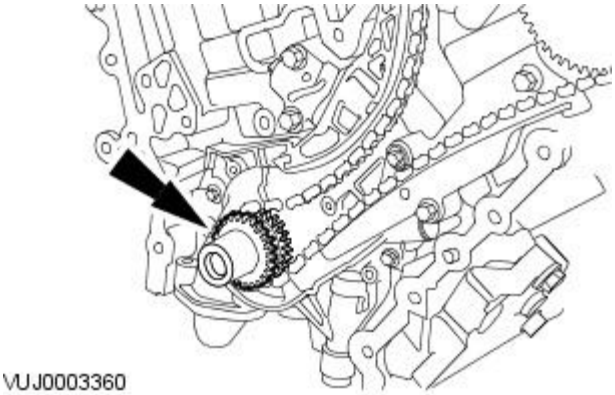

66. Remove the crankshaft outer sprocket.

67. CAUTION: Do not rotate the crankshaft counterclockwise. The timing chains may bind causing engine damage.

Install the crankshaft pulley retaining bolt and washer.

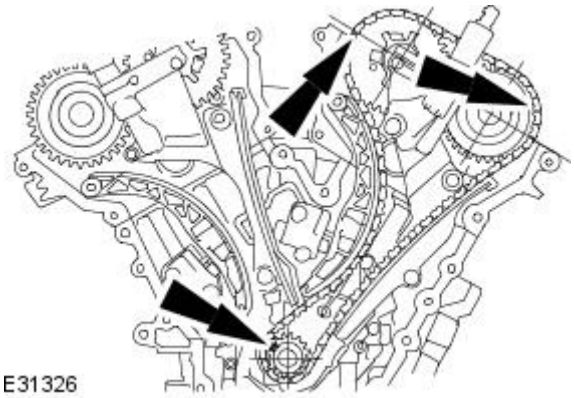

E31326

68. CAUTION: Do not rotate the crankshaft counterclockwise. The timing chains may bind causing engine damage.

Rotate the crankshaft clockwise until the crankshaft keyway is at the 11 O'clock position, the alignment mark on the left-hand intake camshaft sprocket is at the 9 O'clock position and the alignment mark on the left-hand exhaust camshaft sprocket is at the 2 O'clock position.

69. CAUTION: Do not rotate the crankshaft counterclockwise. The timing chains may bind causing engine damage.

Remove the crankshaft pulley retaining bolt and washer.

70. Remove the left-hand timing chain tensioner.

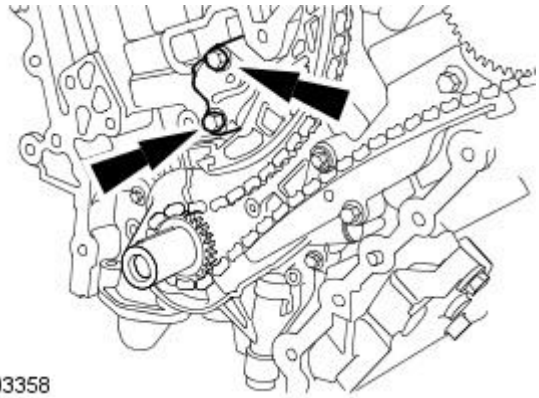

VUJ0003358

71. Remove the left-hand timing chain inner guide.

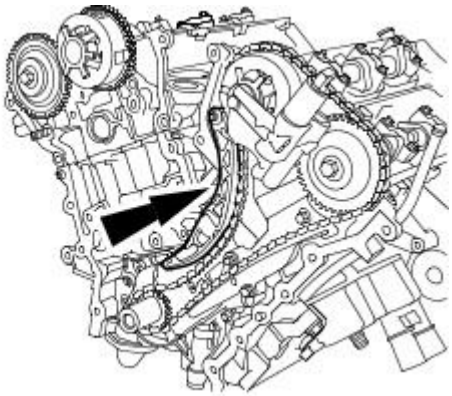

VUJ0003357

72. Remove the left-hand timing chain.

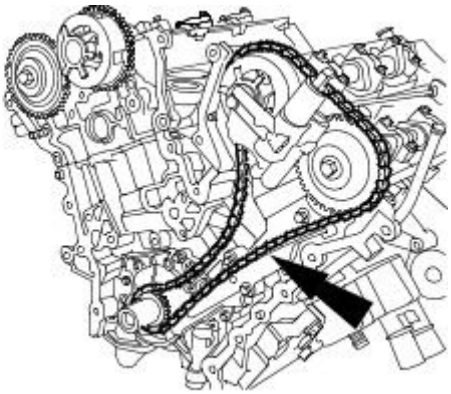

VUJ0003356

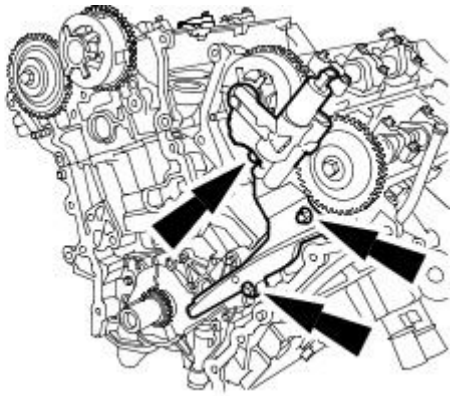

VUJ0003355

73. Remove the left-hand timing chain outer guide.

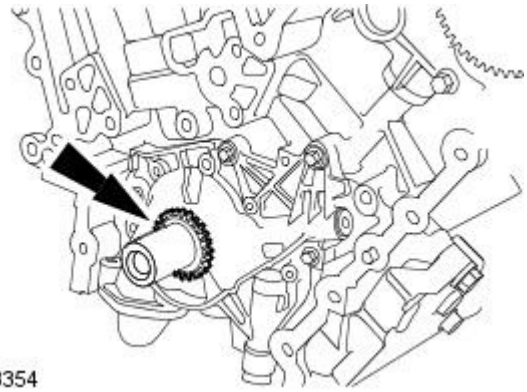

VUJ0003354

74. Remove the crankshaft inner sprocket.

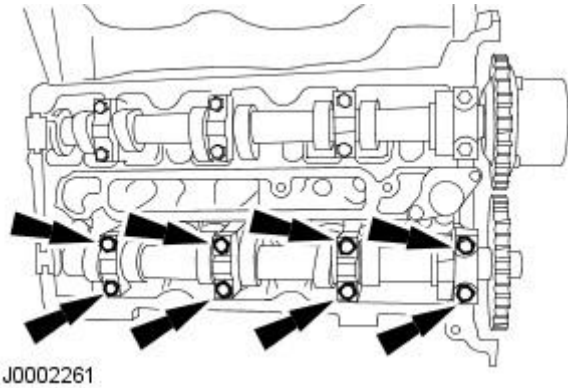

VUJ0002261

75. Remove the RH exhaust camshaft bearing cap bolts evenly.

- Remove the exhaust camshaft bearing caps.

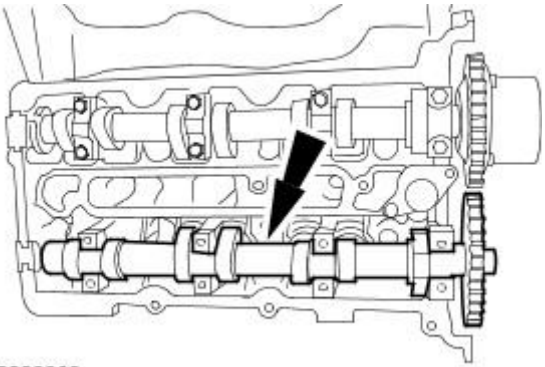

VUJ0002263

76. Remove the RH exhaust camshaft.

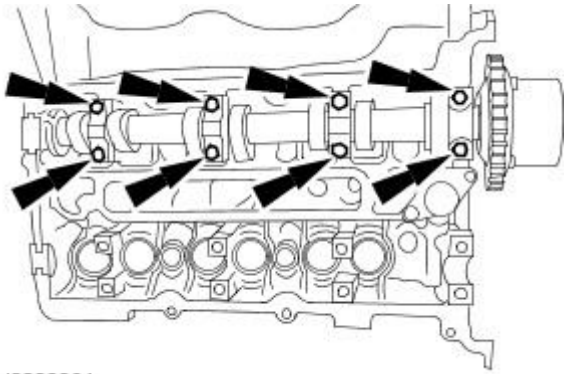

VUJ0002264

77. Remove the RH inlet camshaft bearing cap bolts evenly.

- Remove the inlet camshaft bearing caps.

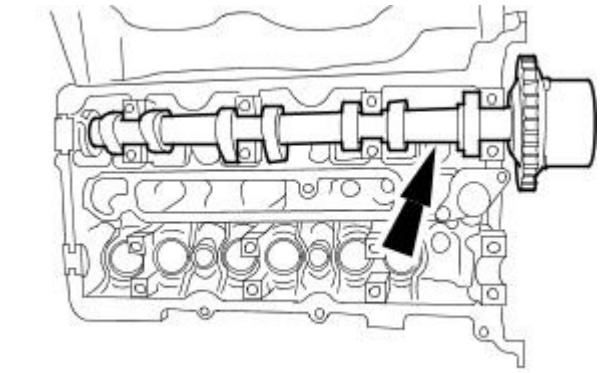

VUJ0002266

78. Remove the RH inlet camshaft.

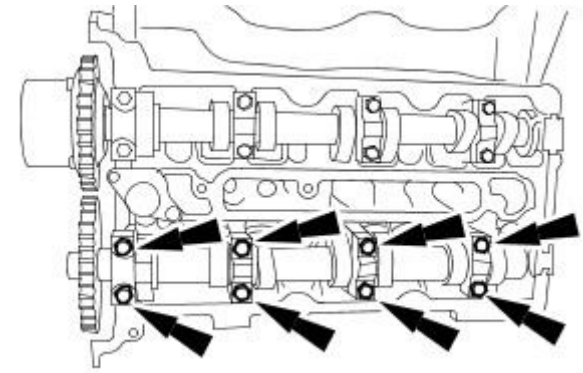

VUJ0002267

79. Remove the LH exhaust camshaft bearing cap bolts evenly.

- Remove the exhaust camshaft bearing caps.

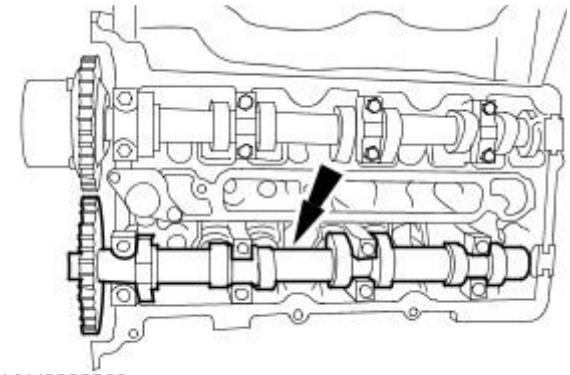

VUJ0002269

80. Remove the LH exhaust camshaft.

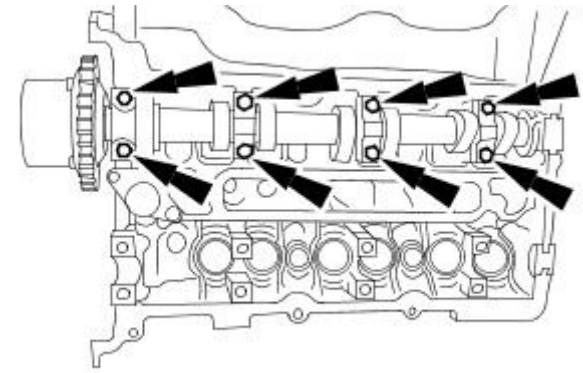

VUJ0002270

81. Remove the LH inlet camshaft bearing cap bolts evenly.

- Remove the inlet camshaft bearing caps.

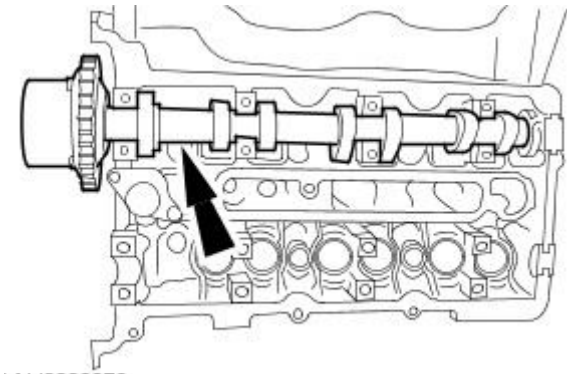

VUJ0002272

82. Remove the LH inlet camshaft.

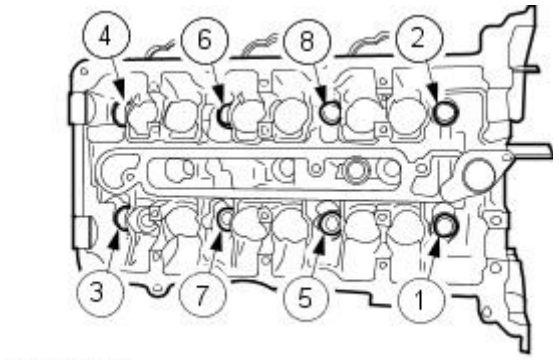

VUJ0002273

83. NOTE: Remove the bolts in the indicated sequence.

Remove the RH cylinder head.

- Discard the gasket.

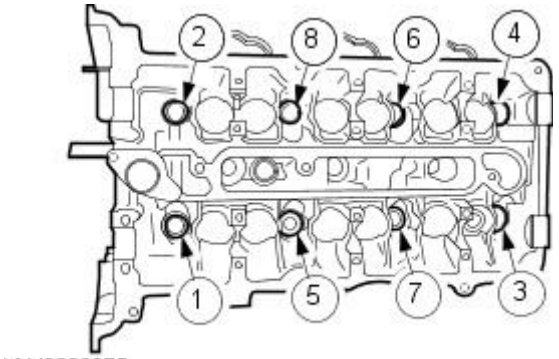

VUJ0002275

84. NOTE: Remove the bolts in the indicated sequence.

Remove the LH cylinder head.

- Discard the gasket.

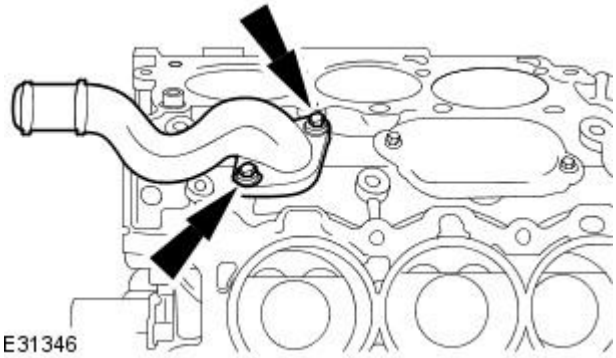
E31346

85. Remove the engine coolant housing.

- Discard the 'O' ring seals.

VUJ0003458

86. NOTE: Engine inverted for clarity.

Remove the oil pump tube.

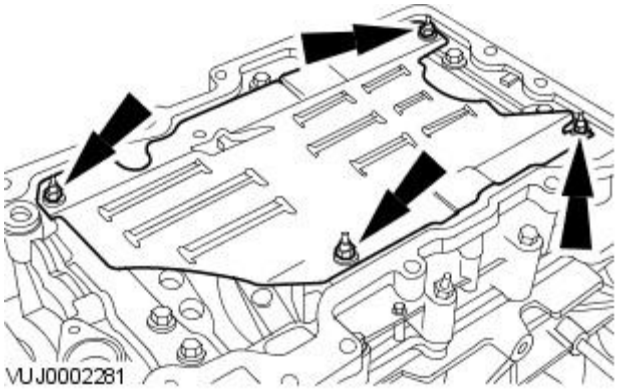
VUJ0002281

87. Remove the oil pan baffle.

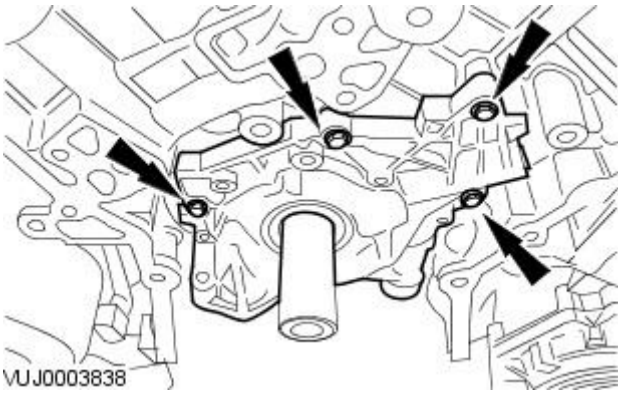

88. Remove the oil pump.

- Remove and discard the O-ring seal.
- Inspect the oil pump for damage and wear.

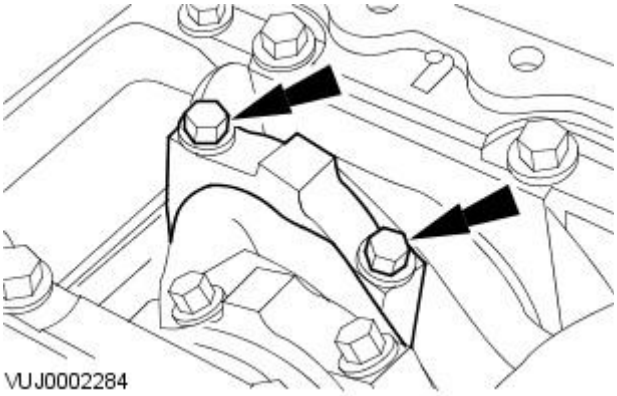

89. CAUTION: Pistons, connecting rods and connecting rod bearings should be numbered to make sure they are reassembled in the same position.

• NOTE: Mark the position of the connecting rod caps to the connecting rods to make sure correct insulation.

• NOTE: Discard the connecting rod bolts after removal.

Remove the connecting rod bolts, the connecting rod caps and the lower connecting rod bearings.

90. Inspect the tops of the cylinder bores. As necessary remove ridge and carbon build up from each cylinder.

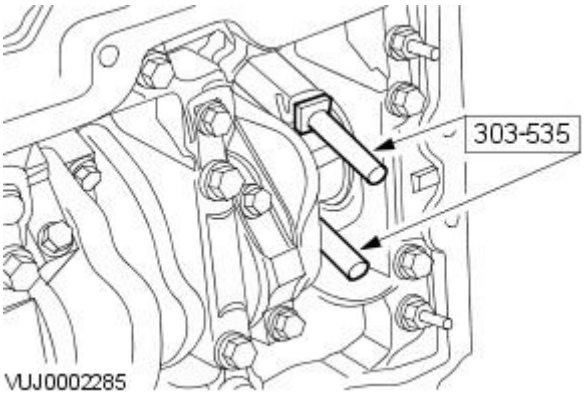

91. CAUTION: Use appropriate protection to prevent damage to the crankshaft bearing journals and cylinder bore surfaces.

Install special tools to the connecting rods.

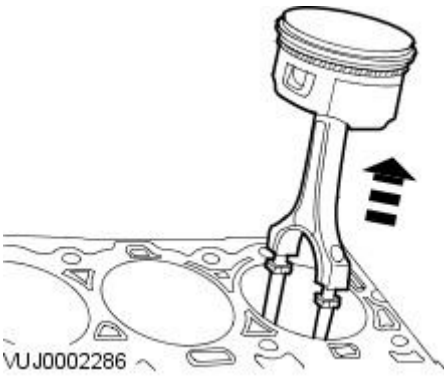

92. CAUTION: Care should be taken not to damage the connecting rod and cap joint face surfaces or possible engine damage may occur. Avoid contaminating the fracture joint surfaces with dirt or grease.

• NOTE: Reattach the connecting rods and caps after removal to avoid mismatch.

Remove the pistons.

- Rotate the crankshaft to locate pistons at the bottom of travel.
- Push the piston, connecting rod and upper bearing through the top of the cylinder.

93. NOTE: Remove the lower cylinder block bolts in the indicated sequence.

Remove the lower cylinder block.

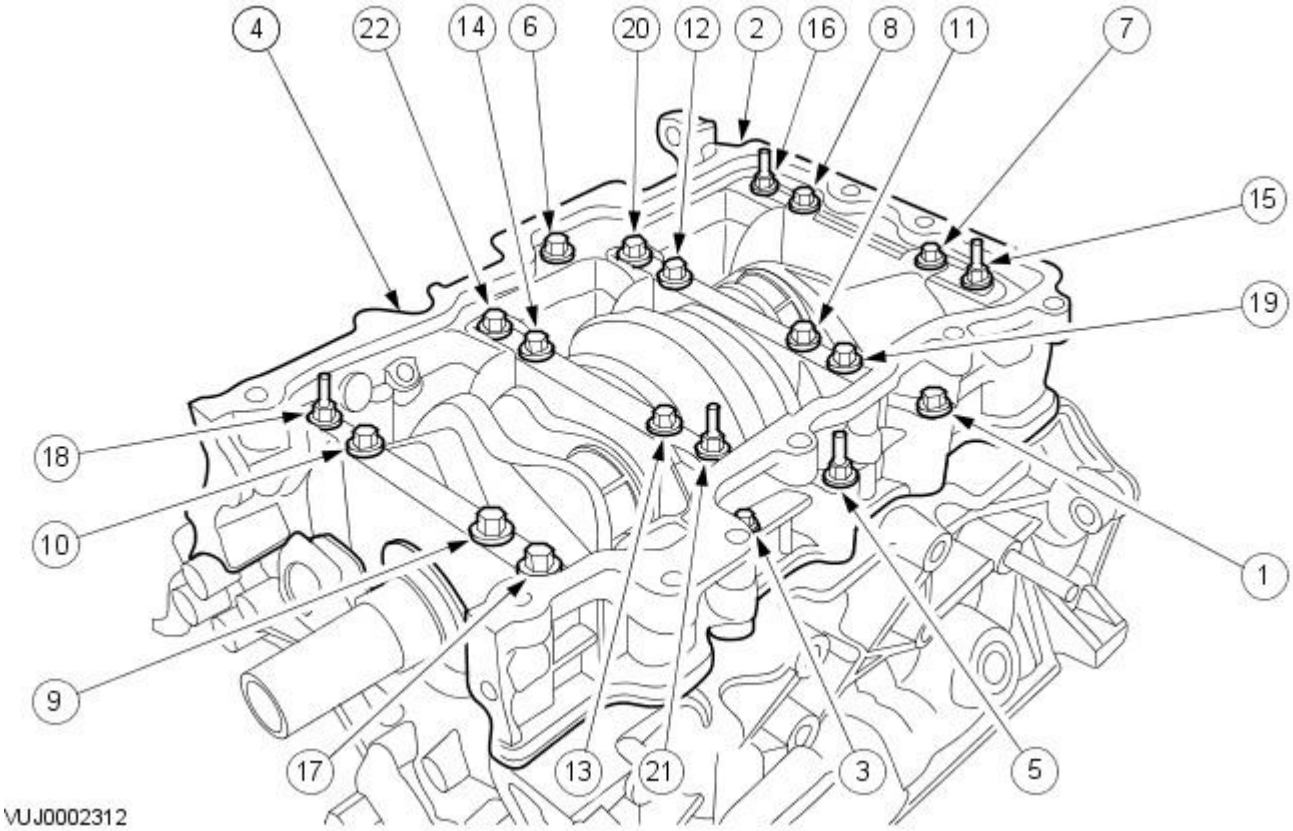

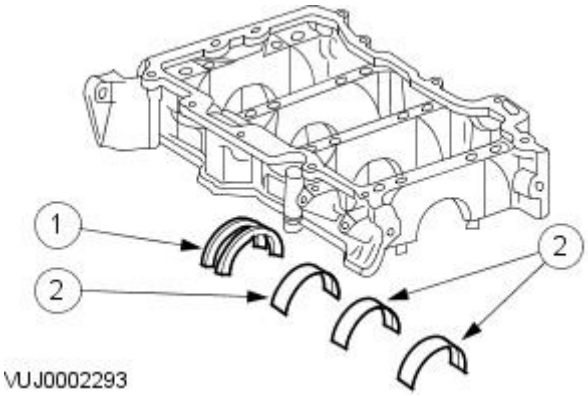

94. NOTE: Mark the position of the upper and lower crankshaft main bearing and the crankshaft thrust bearing for reassembly.

Remove the lower crankshaft bearings.

1. Remove the lower crankshaft thrust main bearing.
2. Remove the lower crankshaft main bearings.

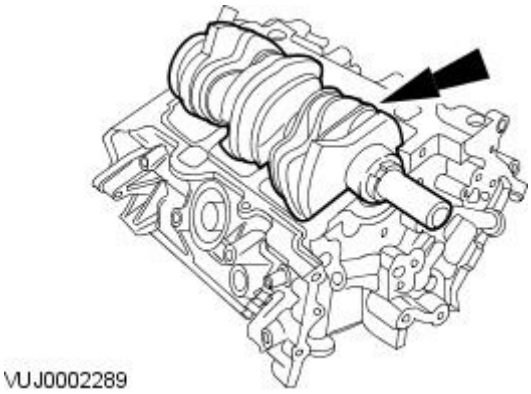

95. CAUTION: Avoid damage to any crankshaft bearing surfaces.

• NOTE: Never remove any pipe plugs or dowels unless they are to be newly installed or the cylinder block is to be washed.

Remove the crankshaft.

- Discard the crankshaft rear main oil seal.

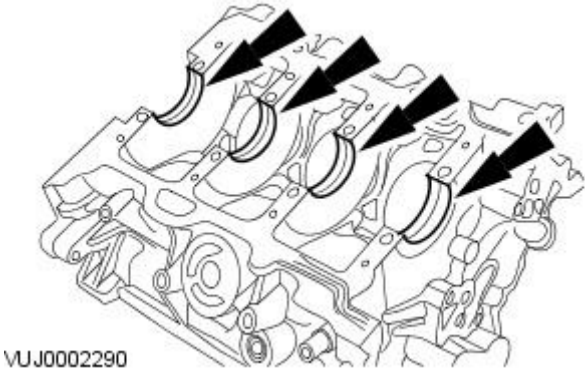

96. Remove the upper crankshaft main bearings.

97. Clean the cylinder block with a soap and water solution. Dry the cylinder block completely with compressed air.

Engine - 2.0L NA V6 - AJV6 / 2.5L NA V6 - AJV6 / 3.0L NA V6 - AJ27 - Cylinder Head

Disassembly and Assembly of Subassemblies

Special Tool(s)	
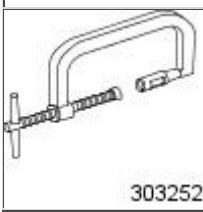 303252	Valve Spring Compressor 303-252

Disassembly

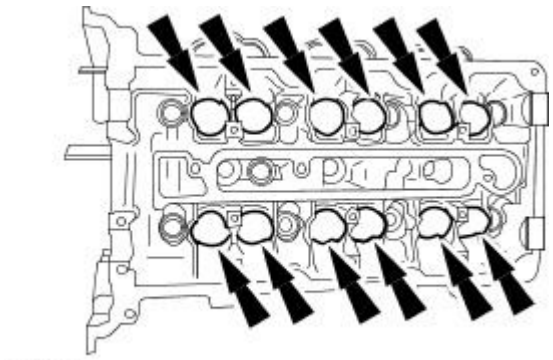

E30946

1. CAUTION: If the cylinder head valve components are to be reused, mark position of the valve components to make sure they are reassembled in the same position.

Remove the bucket tappet and shim assemblies.

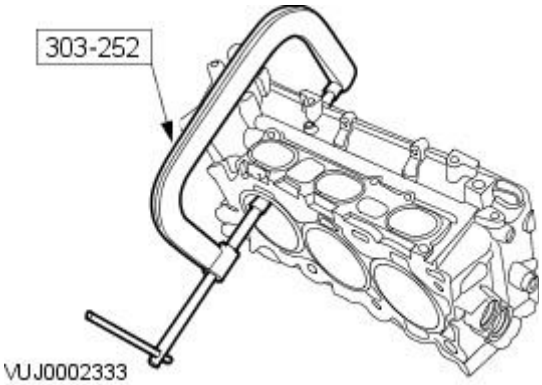

VUJ0002333

2. Using the special tool, compress the valve springs.

- Remove the valve collets.

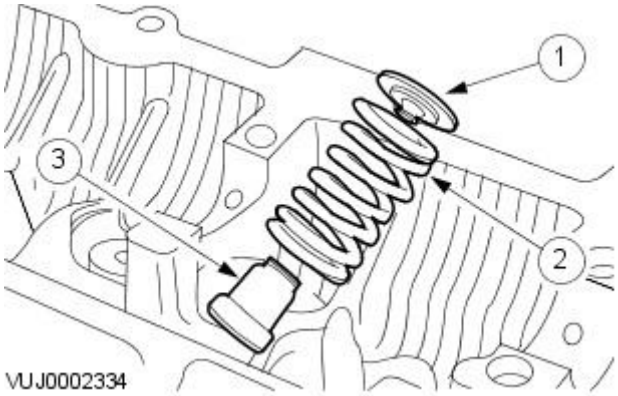

VUJ0002334

3. Remove the valve spring retainers and valve springs.

1. Remove the valve spring retainers.
2. Remove the valve springs.
3. Remove the valve stem oil seals.

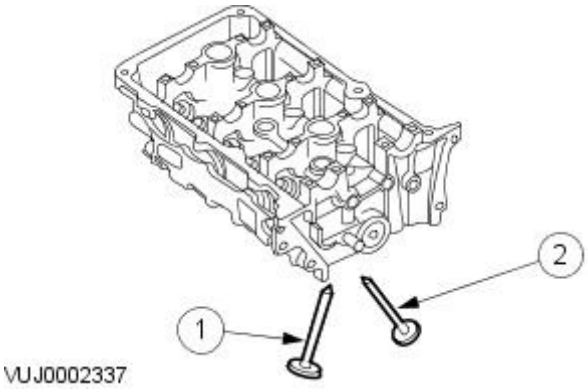

VUJ0002337

4. Remove the valves from the cylinder heads.

1. Remove the intake valves.
2. Remove the exhaust valves.

5. Inspect the cylinder heads and the related components.
For additional information, refer to Section 303-00 Engine System -

General Information.

6. Remove the pipe plugs and alignment dowels as necessary to clean the cylinder heads.

Assembly

1. WARNING: Eye protection is required during use of compressed air. Failure to follow these instructions may result in personal injury.

CAUTION: The cylinder head surface finish is measured in microns. For correct head gasket sealing, avoid any contact of finish with metallic objects.

Clean gasket material, dirt and foreign material from cylinder heads. Wash with a suitable soap and water solution and dry completely using compressed air if pipe plugs have been removed.

2. Install the pipe plugs and alignment dowels to cylinder heads.
   - Apply pipe sealant to plugs prior to installation.

3. NOTE: Lubricate the valve stems before assembly.

Install the valves into the cylinder heads.

1. Install the intake valves.
2. Install the exhaust valves.

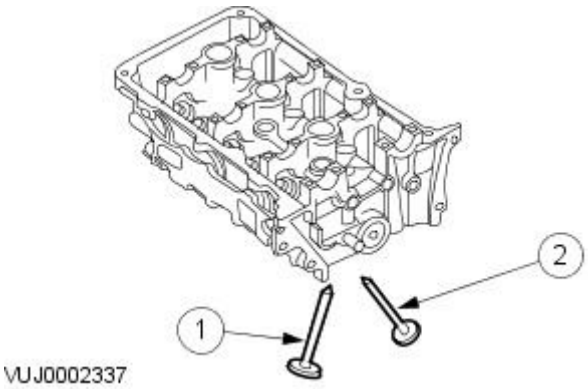

4. Install the valve spring retainers and valve springs.

1. Install the valve stem oil seals.
2. Install the valve springs.
3. Install the valve spring retainers.

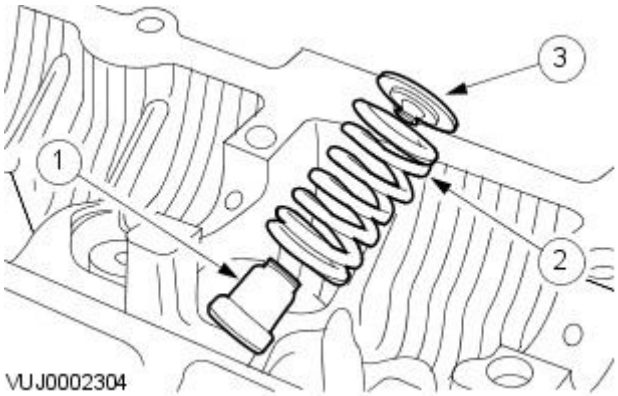

5. Using the special tool, compress the valve springs.
   - Install the valve collets.

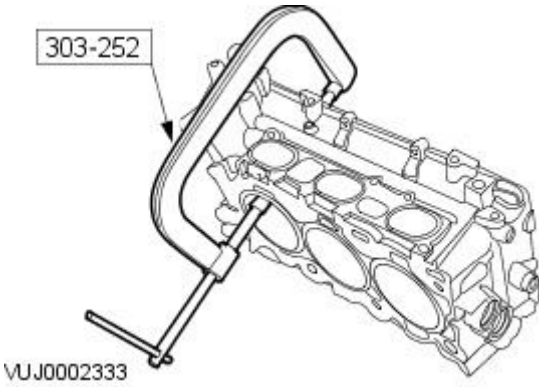

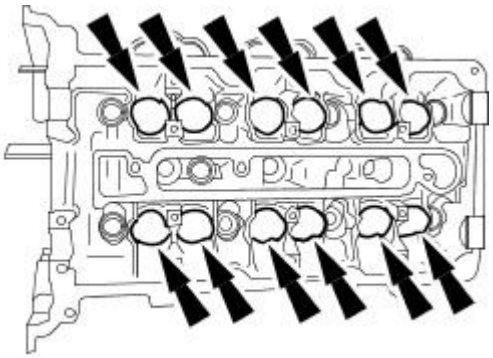

E30946

6. Install the bucket tappet and shim assemblies.

Engine - 2.0L NA V6 - AJV6 / 2.5L NA V6 - AJV6 / 3.0L NA V6 - AJ27 - Piston

Disassembly and Assembly of Subassemblies

Disassembly

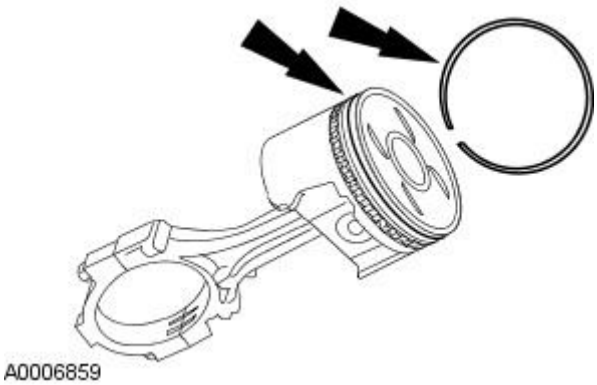

A0006859

1. NOTE: Mark the pistons to the original connecting rods to make sure correct installation in the same cylinders from which they were removed.

Remove the top compression ring.

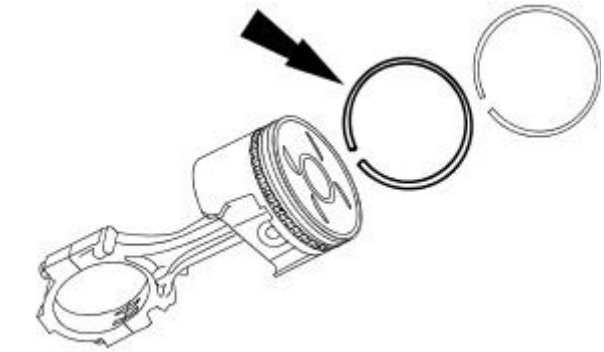

A0006860

2. Remove the second compression ring.

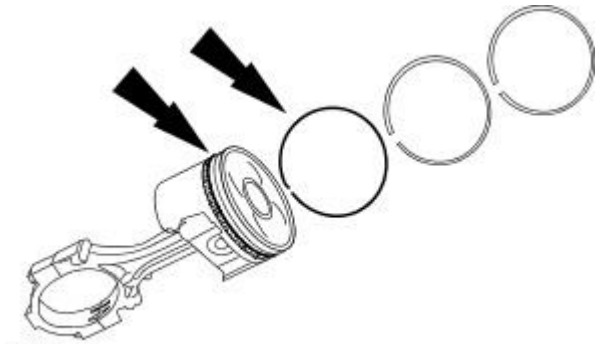

A0006861

3. Remove the first oil control ring.

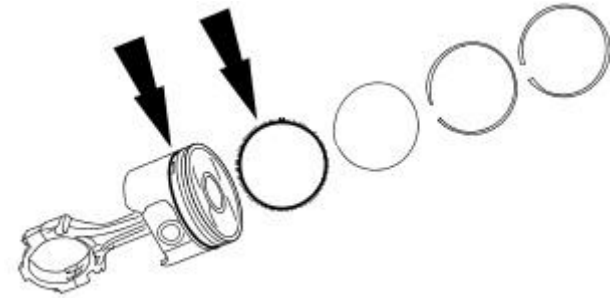

A0006862

4. Remove the oil control spacer ring.

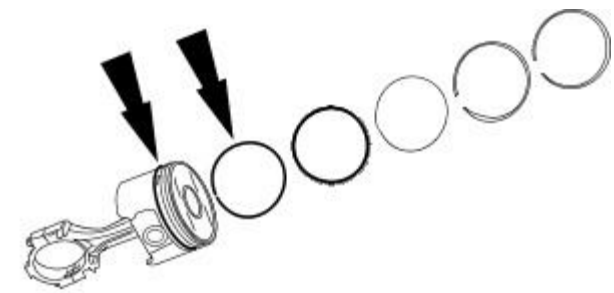

A0006863

5. Remove the second oil control ring.

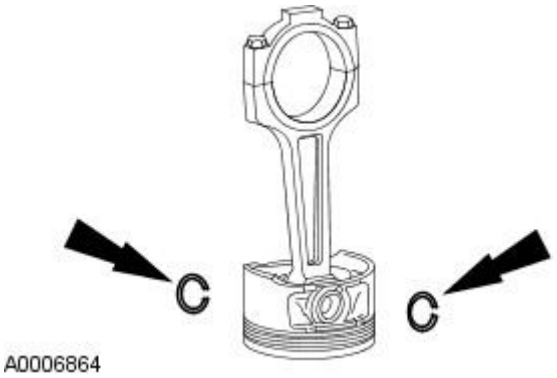

6. WARNING: The retaining rings have a tendency to spring out during removal. Cover the end of the pin bore with a hand or a rag when removing the retaining ring. Eye protection should be worn. Failure to follow these instructions may result in personal injury.

Remove the retaining clips.

7. Remove the piston pin and the connecting rod from the piston.

8. Clean and inspect the connecting rod and the piston. For additional information, refer to Section 303-00 Engine System - General Information.

Assembly

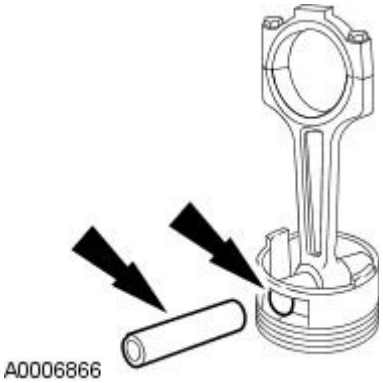

1. Install the piston pin.

- Lubricate the piston pin and piston bore.

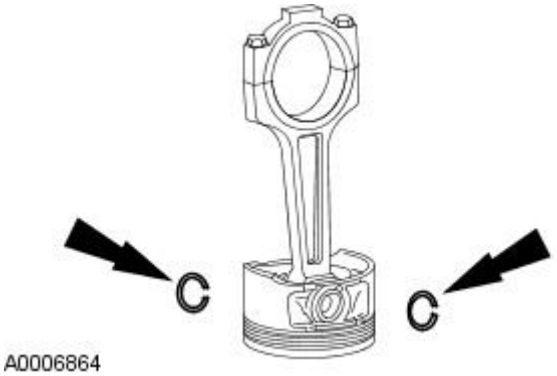

2. Install the retaining clips.

3. Check the piston ring end gap. For additional information, refer to Section 303-00 Engine System - General Information.

4. Lubricate the piston and piston rings.

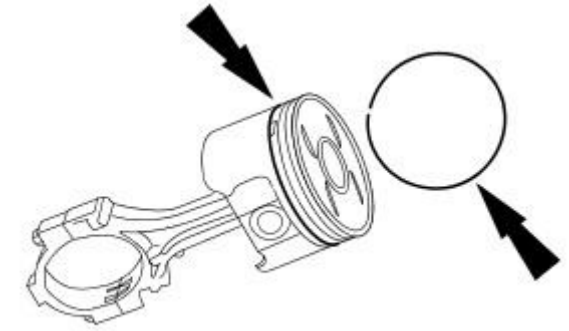

A0006867

5. Install the second oil control ring.

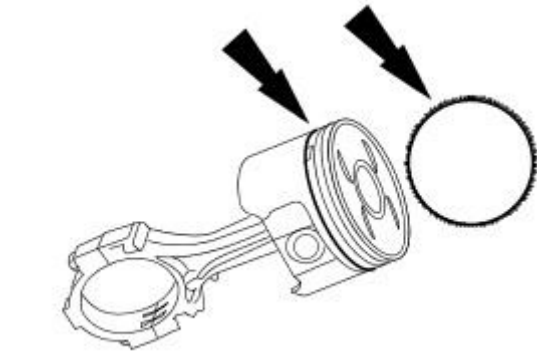

A0006856

6. Install the oil control spacer ring.

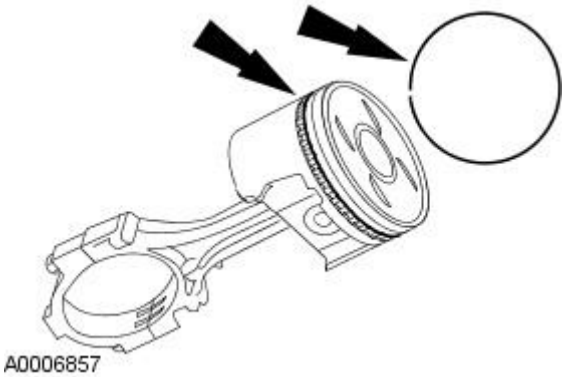

A0006857

7. Install the first oil control ring.

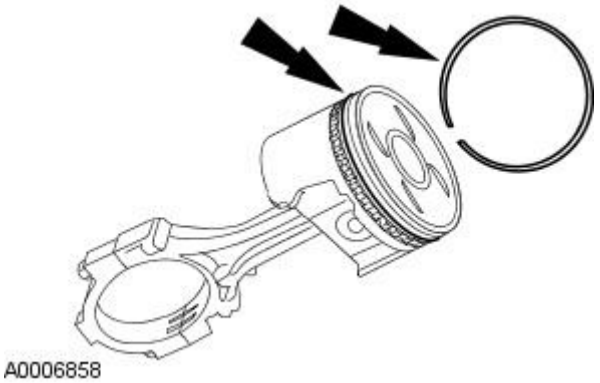

A0006858

8. Install the second compression ring.

- The top of the second compression ring has a "0" marked on it. Position this side of the ring towards the top of the piston.

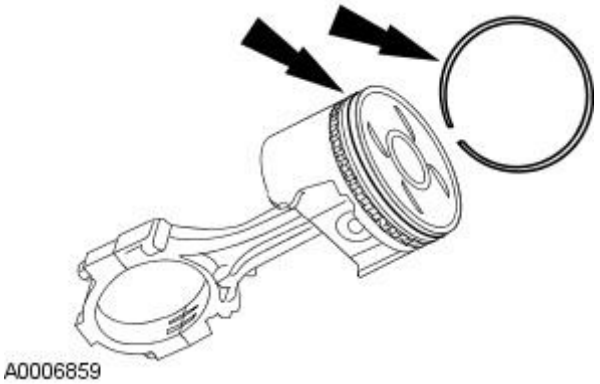

A0006859

9. Install the top compression ring.

- The top compression ring can be installed with either side up.

Engine - 2.0L NA V6 - AJV6 / 2.5L NA V6 - AJV6 / 3.0L NA V6 - AJ27 - Engine

Assembly

Special Tool(s)	
303D055	Wrench Strap-Universal 303-D055
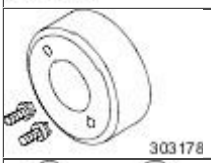 303178	Crankshaft Rear Seal Installer 303-178
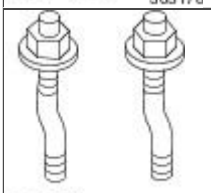 303384	Crankshaft Rear Seal Installer Adapter Bolts 303-384
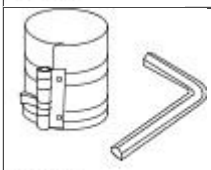 303372	Piston Ring Compressor 303-372
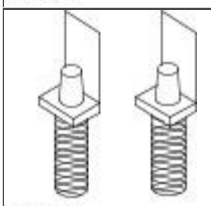 303535	Cylinder Bore Protector 303-535

Assembly

1. CAUTION: Use only plastic scraper when removing old gasket material.

Clean all the mating faces and reusable parts thoroughly and check for damage.

- If gasket material remains on the cylinder head after cleaning, use a plastic tipped scraper to remove remaining material.

2. NOTE: Never remove pipe plugs or alignment dowels unless they are to be serviced.

Reseal oil passage blanking plugs, as necessary.

3. NOTE: The main bearings are precision selective fit. For additional information, refer to Section 303-00 Engine System - General Information.

Install the upper crankshaft thrust washer.

- Align assembly tab on thrust bearing to machining spot face on cylinder block.

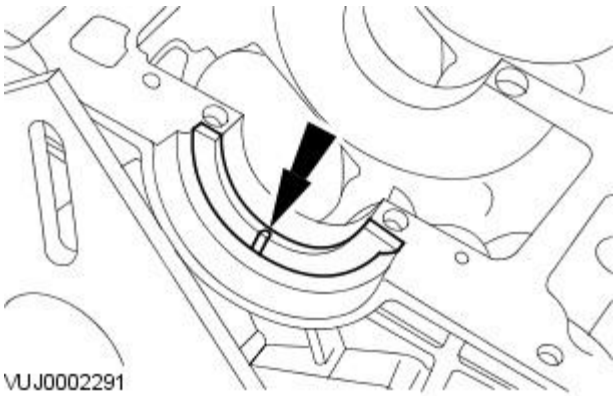

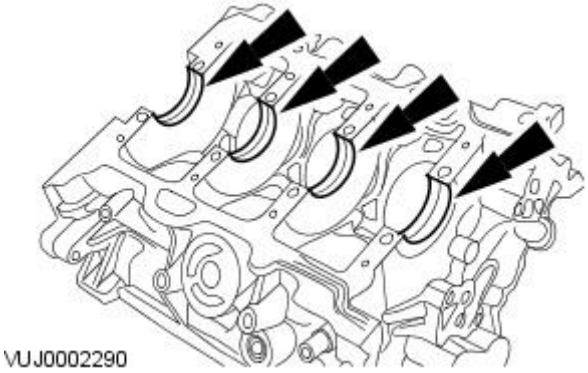

4. Install the upper crankshaft main bearings.

- Lubricate the bearings and thrust washer.

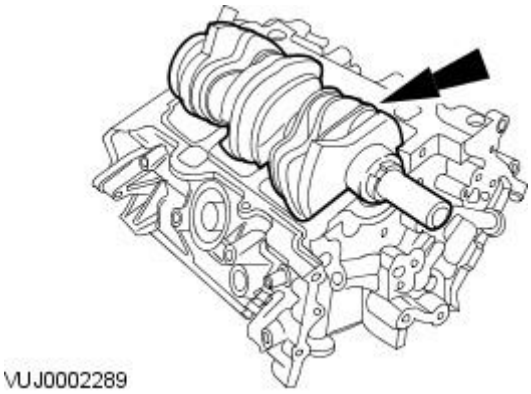

5. CAUTION: Avoid damage to any crankshaft journal bearing surfaces.

Install the crankshaft.

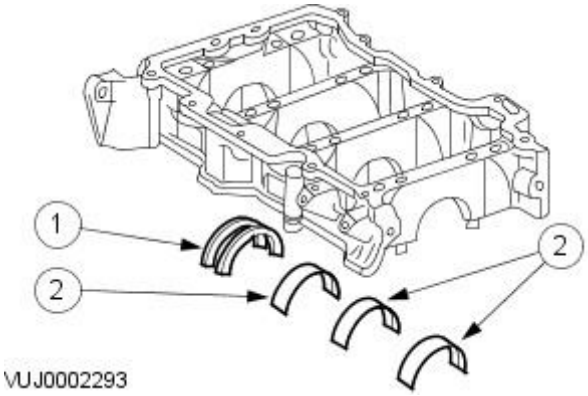

6. NOTE: Push the crankshaft rearward prior to installation of upper thrust bearings.

• NOTE: Visually inspect the bearings to verify that the bearing oiling holes align with cylinder block oil feed holes.

Install the lower crankshaft bearings into the cylinder block.

1. Install the lower crankshaft thrust main bearing into lower cylinder block.
2. Install the lower crankshaft main bearings into lower cylinder block.

- Lubricate the bearings and thrust washer.

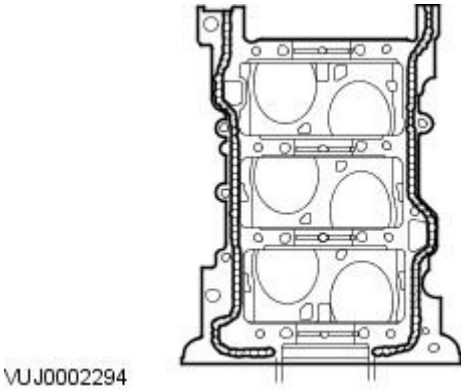

7. NOTE: Sealant application must stop 6 mm from the rear crankshaft bore on each side.

• NOTE: Install lower cylinder block and tighten all bolts to specification within four minutes of applying sealer.

Apply a bead of sealant to the cylinder block housing.

- Use Silicone gasket and sealant.

8. CAUTION: Make sure all dowels are fully seated into lower cylinder block prior to tightening the bolts.

• NOTE: Before installing the bolts lightly seat the crankshaft forward.

• NOTE: Do not lubricate the lower cylinder block bolts.

• NOTE: Loosely install the lower cylinder block bolts.

• NOTE: Do not rotate crankshaft until all bolts are tightened to specification.

• NOTE: Bolts must be tightened within 4 minutes of applying sealant.

Install the lower cylinder block on the cylinder block.

- Push crankshaft rearward to seat the crankshaft thrust washer.

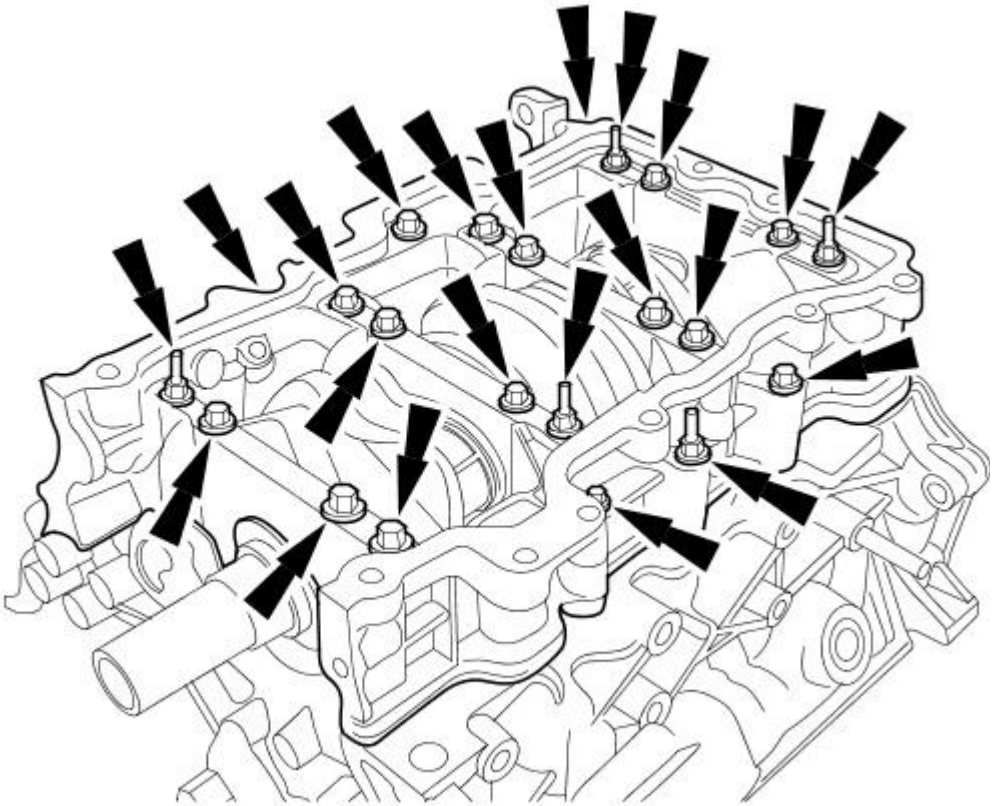

VUJ0002287

9. CAUTION: Bolts 1 through 16 are tighten-to-yield and must be replaced.

• NOTE: Tighten the bolts in the indicated sequence in four stages.

Complete the tightening sequence.

- Stage 1: Bolts 1-8, 25 Nm
- Stage 2: Bolts 9-16, 40 Nm
- Stage 3: Bolts 1-16, 90°
- Stage 4: Bolts 17-22, 25 Nm
- Verify the crankshaft rotates freely.

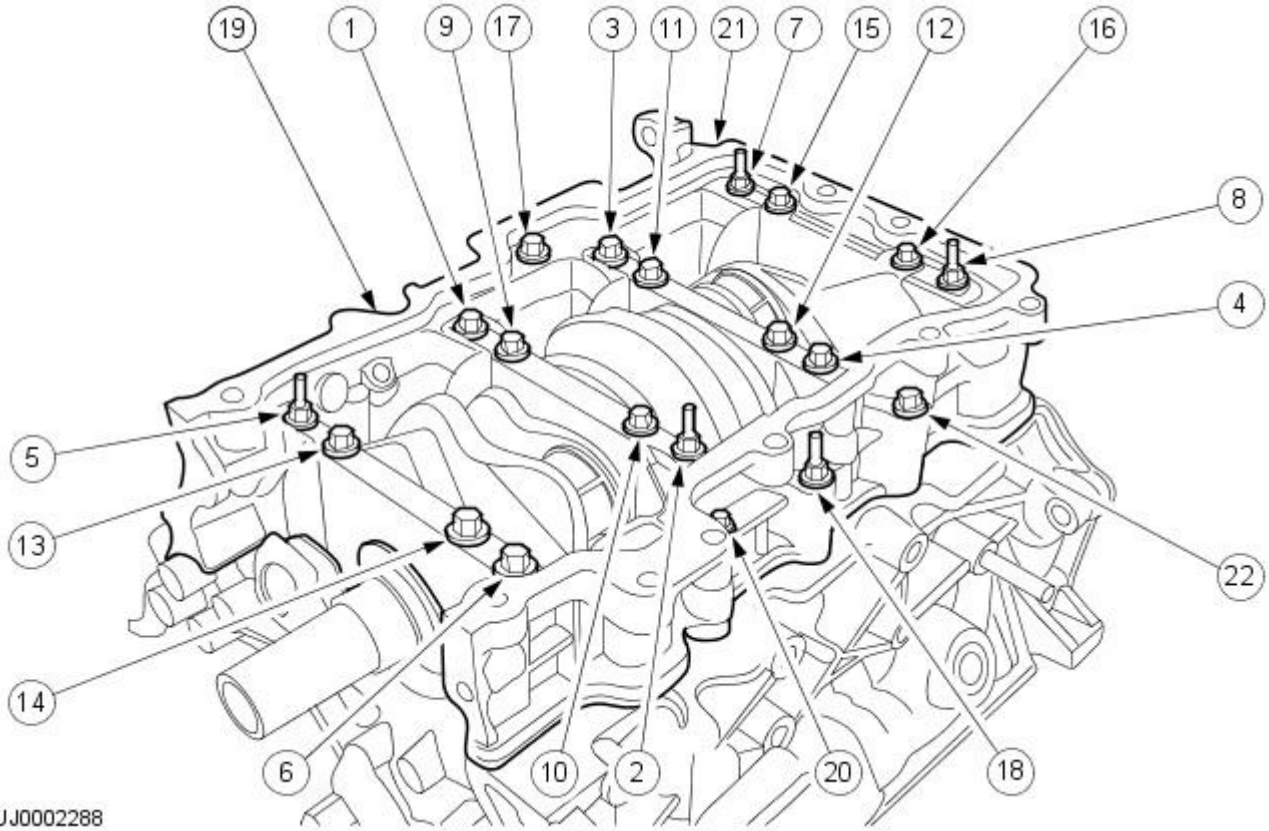

VUJ0002288

10. Remove excess sealant which may squeeze out at the front cover sealing surface.

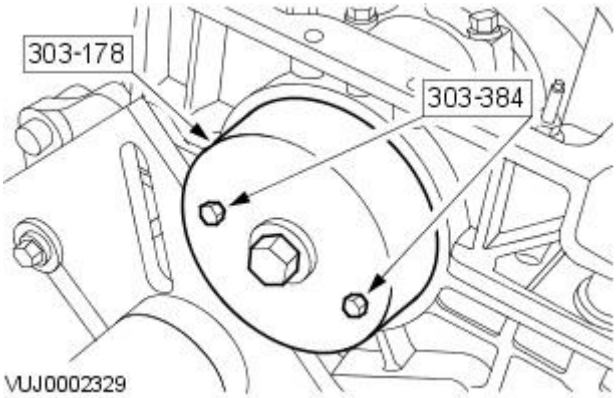

11. NOTE: Alternate bolt tightening to correctly seat the crankshaft rear oil seal until it is flush with the cylinder block.

Using the special tools, install the crankshaft rear oil seal.

12. CAUTION: Use appropriate protection to prevent damage to the crankshaft bearing journals and cylinder bore surfaces.

Install special tools to the connecting rods.

- Position the crankshaft journal at the bottom of the stroke.

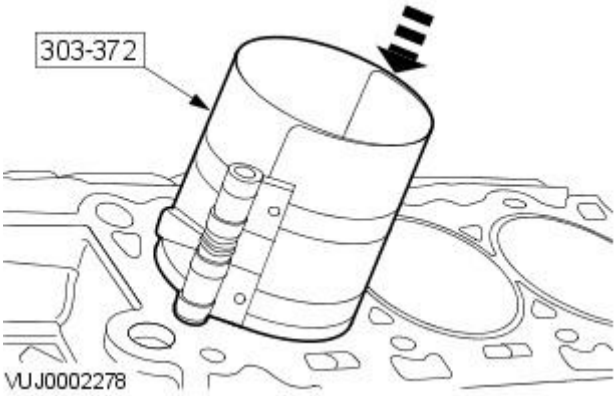

13. NOTE: Make sure the piston ring gaps are positioned at different locations opposite the thrust side of the piston before installation.

• NOTE: Install pistons with arrow to front of engine.

Using the special tool compress the rings and install the piston and connecting rod.

- Lubricate all piston components.

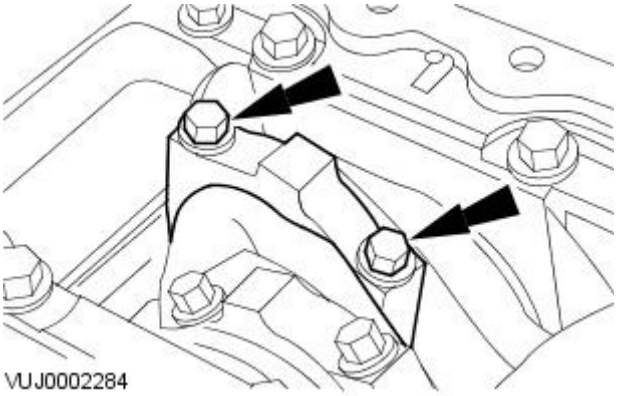

14. CAUTIONS:

When assembling the connecting rods and connecting rod caps, it is imperative that bearing slots and tangs be located on the same side of the connecting rods.

Connecting rod bolts are torqued to yield and must be replaced.

• NOTE: Remove the special tools from the connecting rods.

• NOTE: Tighten the bolts in the indicated sequence in three stages.

Position the connecting rod cap on the appropriate connecting rod.

- Stage 1: 23 Nm
- Stage 2: 43 Nm
- Stage 3: 105°

15. Rotate the crankshaft to check correct operation.

16. CAUTIONS:

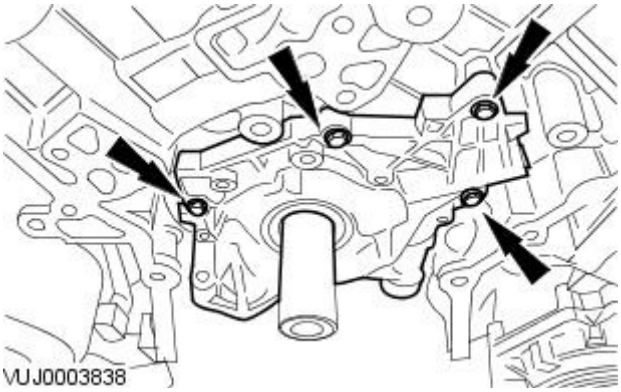

Install the oil pump flush to the cylinder block for correct sealing.

Rotate the inner rotor of the oil pump to align with the flats on the crankshaft before installation.

Install the oil pump.

- Tighten to 10 Nm.

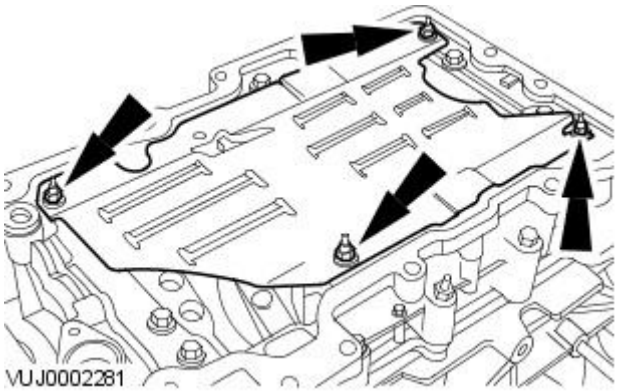

17. CAUTION: Oil pan baffle nuts are tightened to yield and must not be reused.

• NOTE: Tighten the bolts in the indicated sequence in two stages.

Install the oil pan baffle.

- Stage 1: 5 Nm
- Stage 2: 45°

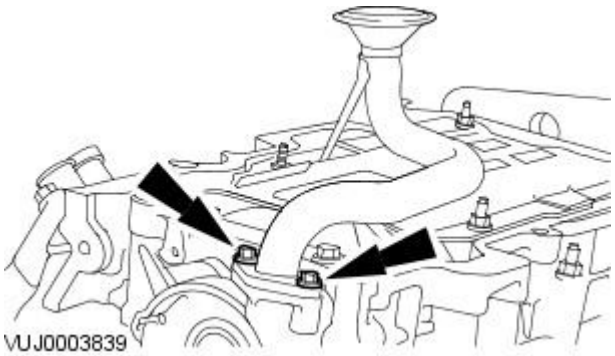

18. NOTE: Engine inverted for clarity.

Install the oil pump tube.

- Install a new O-ring seal.
- Tighten to 10 Nm.

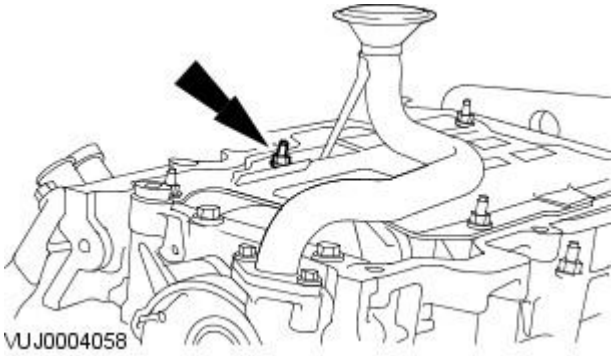

19. NOTE: Engine inverted for clarity.

Tighten to 5 Nm + 45°.

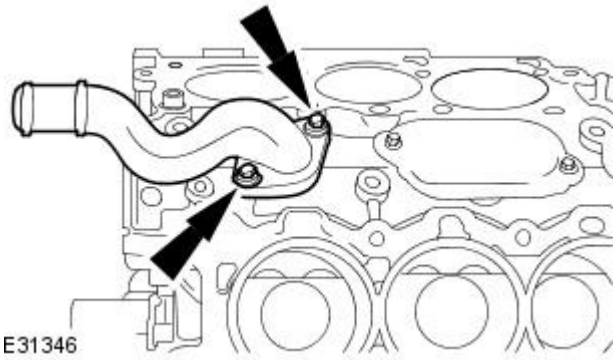

20. Install the engine coolant housing.

- Install new 'O' ring seals.
- Tighten to 25 Nm.

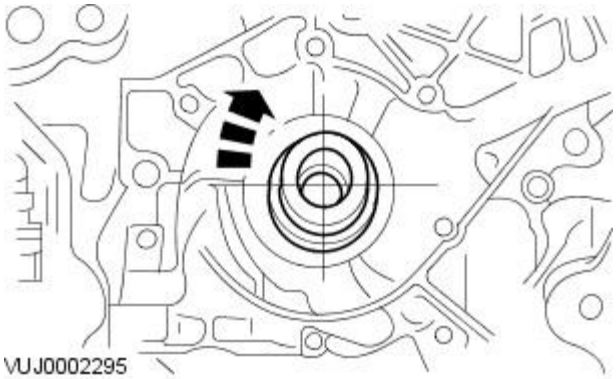

21. Position the crankshaft.

- Turn the crankshaft until the key is in the 11 o'clock position.
- Remove the crankshaft pulley bolt and washer.

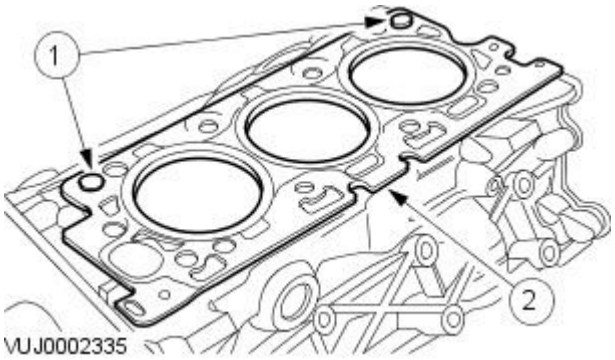

22. Install a new cylinder head gasket (LH shown - RH similar).

1. Make sure the cylinder head dowels are correctly located.
2. Install a new cylinder head gasket.

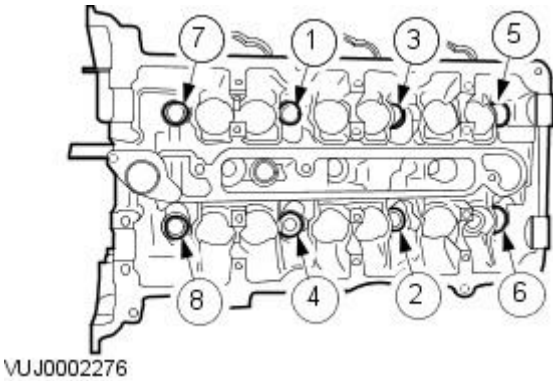

23. NOTE: Install the bolts in the indicated sequence.

Install the LH cylinder head.

- Tighten to 30 Nm.
- Tighten 90°.
- Loosen 360°.
- Tighten to 30 Nm.
- Tighten 90°.
- Tighten 90°.

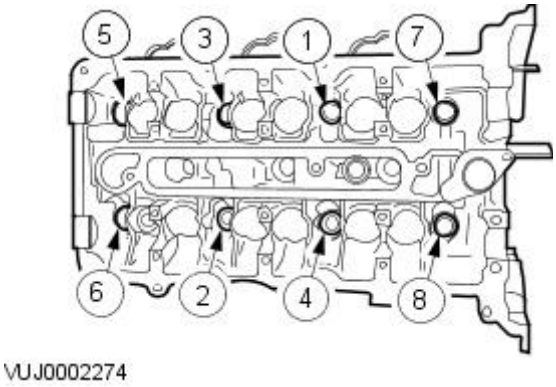

24. NOTE: Install the bolts in the indicated sequence.

Install the RH cylinder head.

- Tighten to 30 Nm.
- Tighten 90°.
- Loosen 360°.
- Tighten to 30 Nm.
- Tighten 90°.
- Tighten 90°.

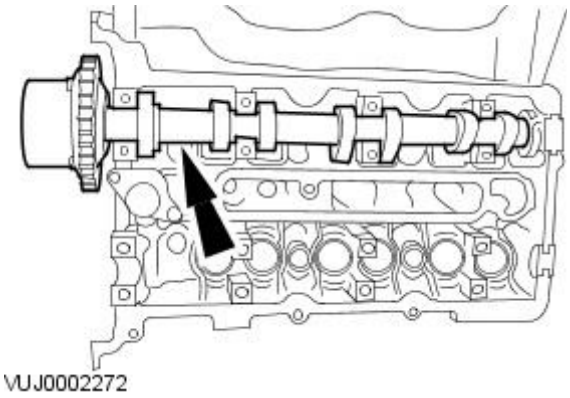

25. Install the LH inlet camshaft.

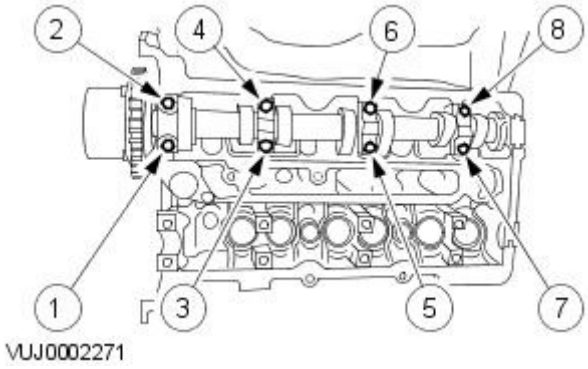

26. CAUTION: Do not install the cylinder head camshaft journal thrust caps until the camshaft journal caps are installed or damage to the thrust caps may occur.

• NOTE: Lubricate the camshafts and the camshaft bearing caps with oil WSE-M2C908-A or equivalent meeting Jaguar specification prior to installation.

Install the LH inlet camshaft bearing cap bolts evenly.

- Install the inlet camshaft bearing caps.
- Tighten to 10 Nm.

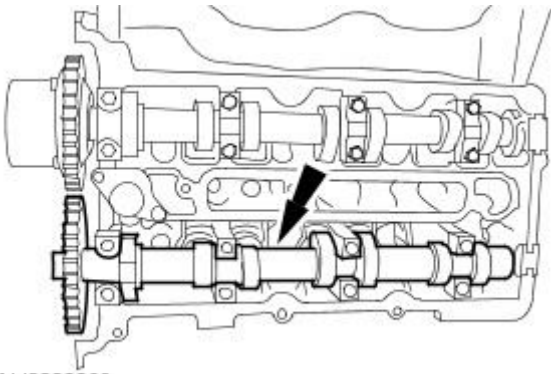

VUJ0002269

27. Install the LH exhaust camshaft.

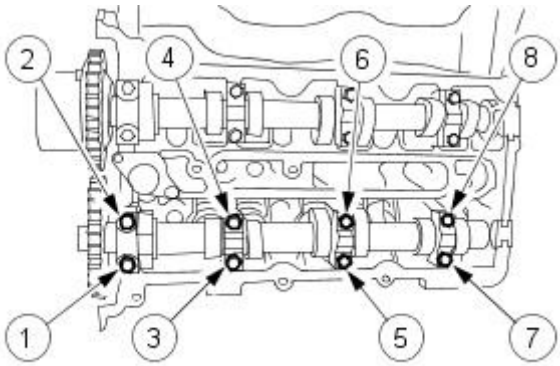

VUJ0002268

28. CAUTION: Do not install the cylinder head camshaft journal thrust caps until the camshaft journal caps are installed or damage to the thrust caps may occur.

• NOTE: Lubricate the camshafts and the camshaft bearing caps with oil WSE-M2C908-A or equivalent meeting Jaguar specification prior to installation.

Install the LH exhaust camshaft bearing cap bolts evenly.

- Install the exhaust camshaft bearing caps.

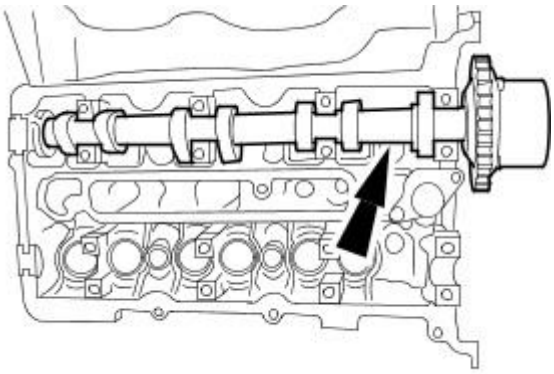

VUJ0002266

29. Install the RH inlet camshaft.

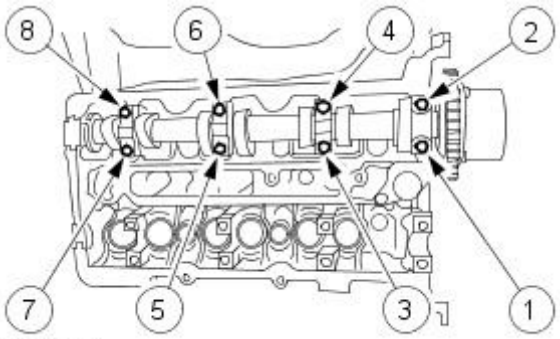

VUJ0002265

30. Install the RH inlet camshaft bearing cap bolts evenly.

- Install the inlet camshaft bearing caps.

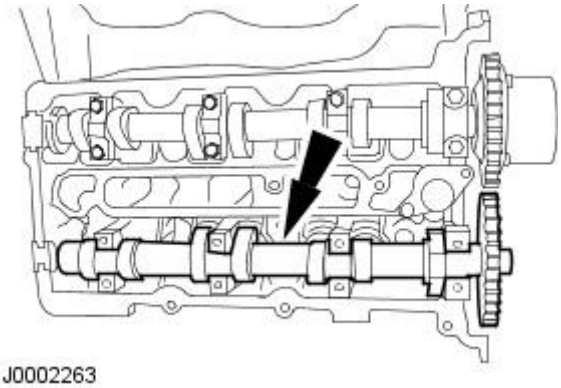

VUJ0002263

31. Install the RH exhaust camshaft.

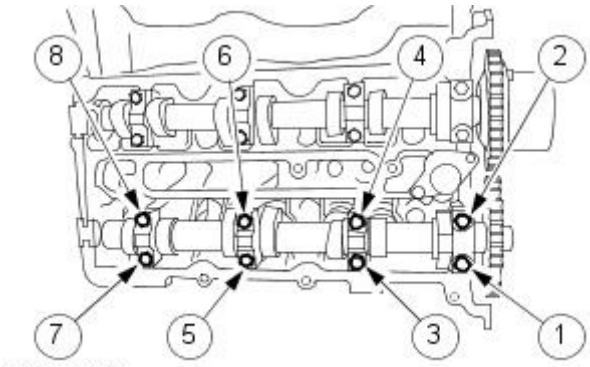

VUJ0002262

32. Install the RH exhaust camshaft bearing cap bolts evenly.

- Install the exhaust camshaft bearing caps.

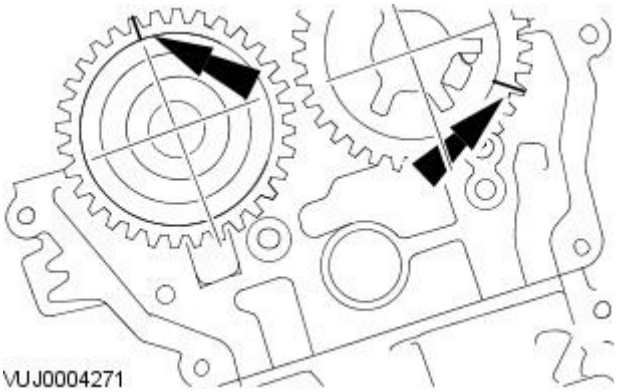
VUJ0004271

33. Rotate the right-hand intake camshaft clockwise until the camshaft sprocket alignment mark is at the 5 O'clock position and rotate the right-hand exhaust camshaft sprocket clockwise until the camshaft sprocket alignment mark is at the 12 O'clock position.

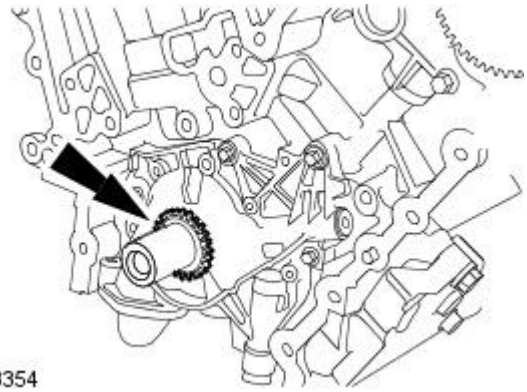
VUJ0003354

34. Install the crankshaft inner sprocket.

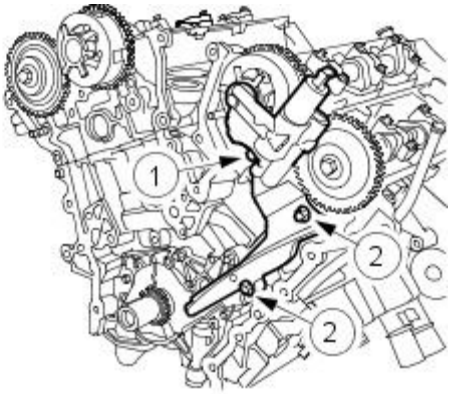

VUJ0003807

35. Install the left-hand timing chain outer guide.

- Tighten the retaining bolts in the sequence shown in two stages.
- Stage 1: Tighten bolt 1 to 25 Nm.
- Stage 2: Tighten bolts 2 to 25 Nm.

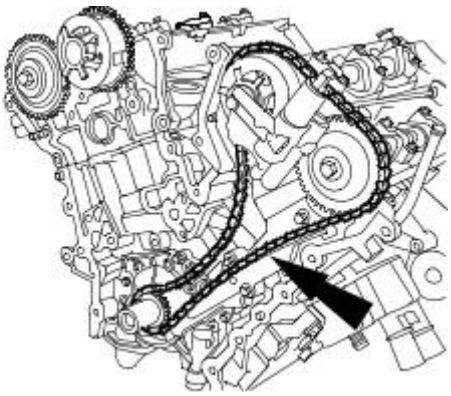
VUJ0003356

36. CAUTIONS:

Make sure the crankshaft keyway is at the 11 O'clock position, the alignment mark on the left-hand intake camshaft sprocket is at the 9 O'clock position and the alignment mark on the left-hand exhaust camshaft sprocket is at the 2 O'clock position.

Make sure the timing chain alignment marks are correctly positioned to the crankshaft sprocket and camshaft sprocket alignment marks.

Make sure the timing chain slack is on the tensioned side of the timing chain.

Install the left-hand timing chain.

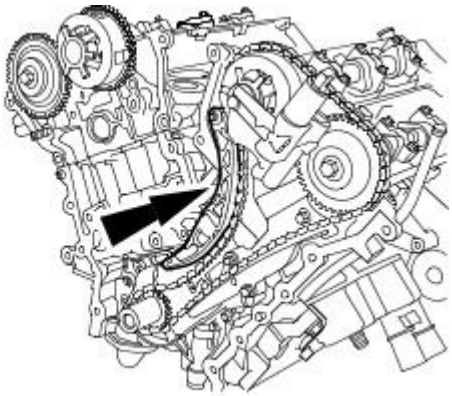

VUJ0003357

37. Install the left-hand timing chain inner guide.

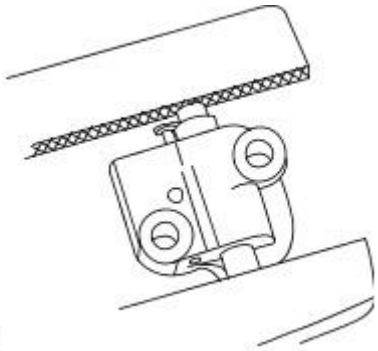

GA3138-B

38. CAUTION: Use suitable protective covers on the vice jaws to protect the timing chain tensioner.

Secure the left-hand timing chain tensioner in the vice jaws.

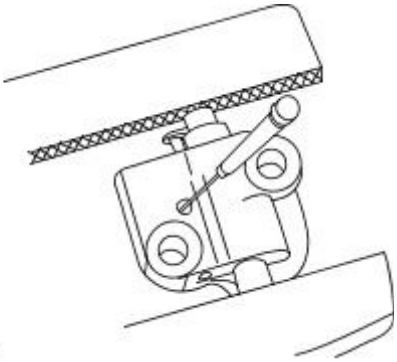

GA3139-B

39. CAUTION: During timing chain tensioner compression, do not release the ratchet stem until the timing chain tensioner piston is fully bottomed in its bore or damage to the ratchet stem will result.

Using a suitable tool, hold the left-hand timing chain tensioner ratchet lock mechanism away from the ratchet stem.

40. NOTE: The timing chain tensioner piston should retract with minimal force. If binding occurs, reposition the timing chain tensioner to eliminate side loading.

Slowly compress the left-hand timing chain tensioner.

41. NOTE: The retaining tool must remain in the timing chain tensioner until the timing chain tensioner is installed to the engine with the piston bottomed in the bore.

Using a suitable tool, retain the left-hand timing chain tensioner piston.

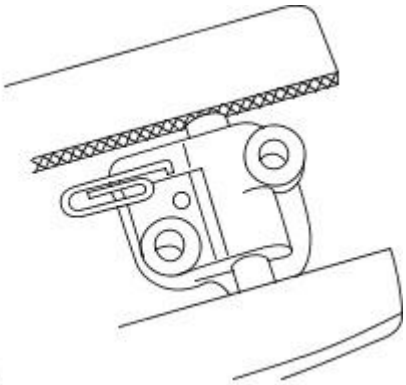

GA3140-A

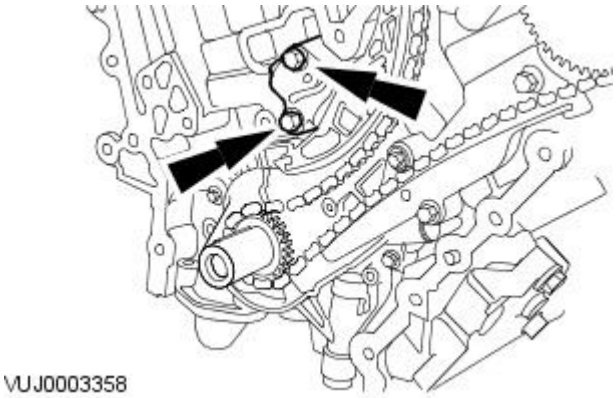

42. Install the left-hand timing chain tensioner.

- Tighten to 25 Nm.

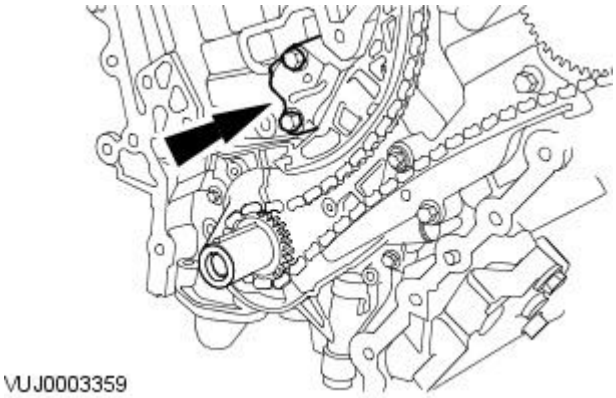

43. Release the tension in the left-hand timing chain tensioner.

- Remove the retaining tool.

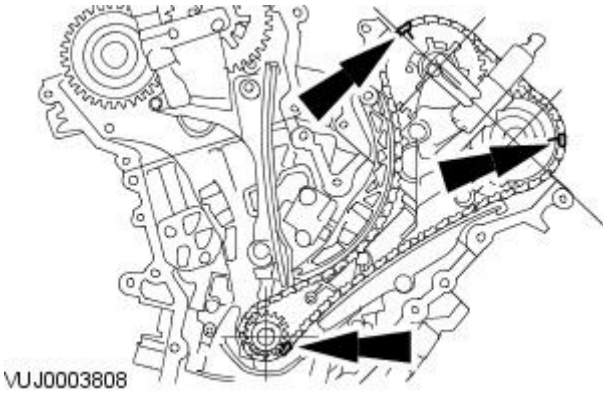

44. Make sure the left-hand timing chain alignment marks have remained correctly positioned to the camshaft sprocket and crankshaft sprocket alignment marks.

45. CAUTION: Do not rotate the crankshaft counterclockwise. The timing chains may bind causing engine damage.

Install the crankshaft pulley retaining bolt and washer.

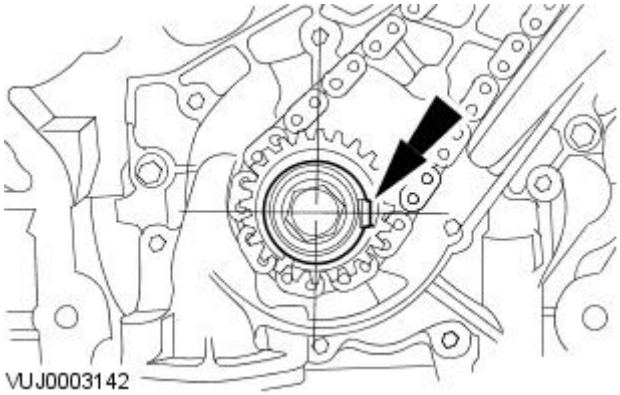

46. CAUTION: Do not rotate the crankshaft counterclockwise. The timing chains may bind causing engine damage.

Rotate the crankshaft clockwise until the crankshaft keyway is at the 3 O'clock position.

47. CAUTION: Do not rotate the crankshaft counterclockwise. The timing chains may bind causing engine damage.

Remove the crankshaft pulley retaining bolt and washer.

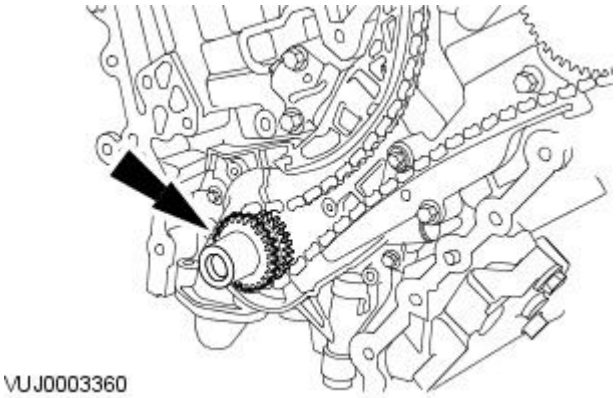

48. Install the crankshaft outer sprocket.

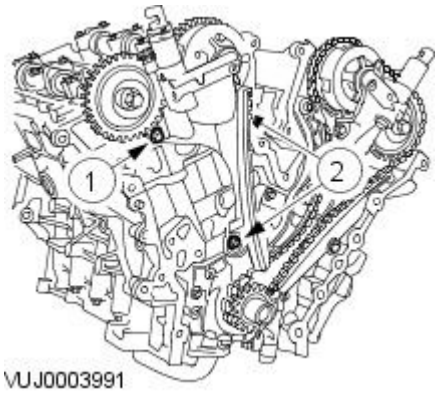

49. Install the right-hand timing chain inner guide.

- Tighten the retaining bolts in the sequence shown in two stages.
- Stage 1: Tighten bolt 1 to 25 Nm.
- Stage 2: Tighten bolts 2 to 25 Nm.

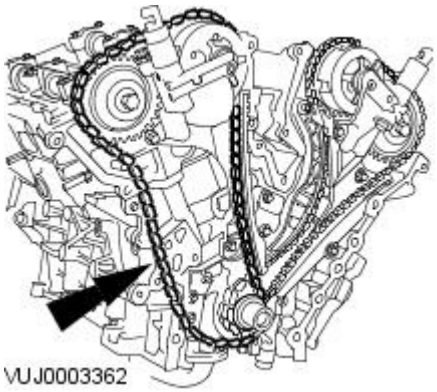

50. CAUTIONS:

Make sure the crankshaft keyway is at the 3 O'clock position, the alignment mark on the right-hand intake camshaft sprocket is at the 5 O'clock position and the alignment mark on the right-hand exhaust camshaft sprocket is at the 12 O'clock position.

Make sure the timing chain alignment marks are correctly positioned to the crankshaft sprocket and camshaft sprocket alignment marks.

Make sure the timing chain slack is on the tensioned side of the timing chain.

Install the right-hand timing chain.

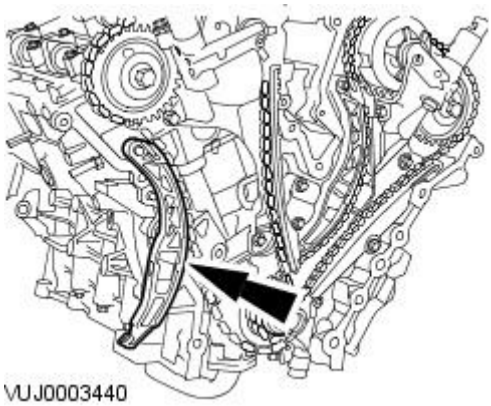

51. Install the right-hand timing chain outer guide.

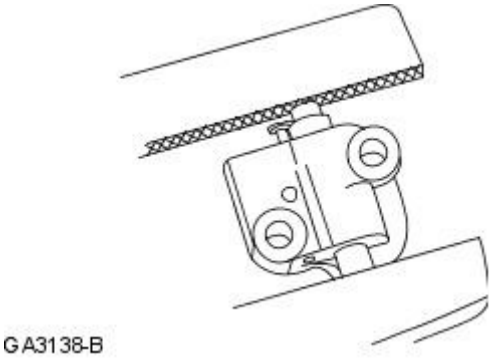

52. CAUTION: Use suitable protective covers on the vice jaws to protect the timing chain tensioner.

Secure the right-hand timing chain tensioner in the vice jaws.

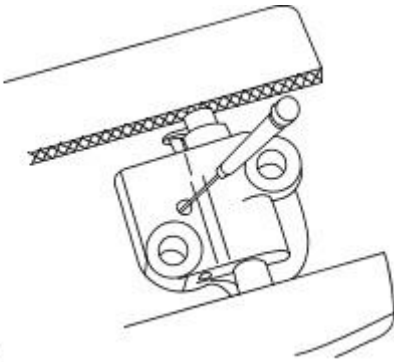

GA3139-B

53. CAUTION: During timing chain tensioner compression, do not release the ratchet stem until the timing chain tensioner piston is fully bottomed in its bore or damage to the ratchet stem will result.

Using a suitable tool, hold the right-hand timing chain tensioner ratchet lock mechanism away from the ratchet stem.

54. NOTE: The timing chain tensioner piston should retract with minimal force. If binding occurs, reposition the timing chain tensioner to eliminate side loading.

Slowly compress the right-hand timing chain tensioner.

55. NOTE: The retaining tool must remain in the timing chain tensioner until the timing chain tensioner is installed to the engine with the piston bottomed in the bore.

Using a suitable tool, retain the right-hand timing chain tensioner piston.

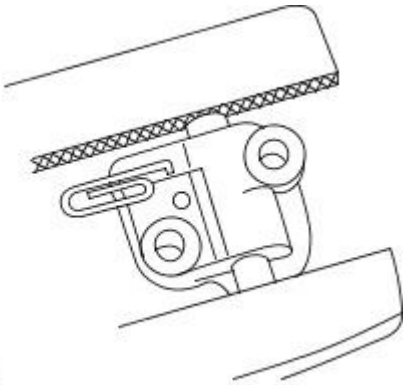

GA3140-A

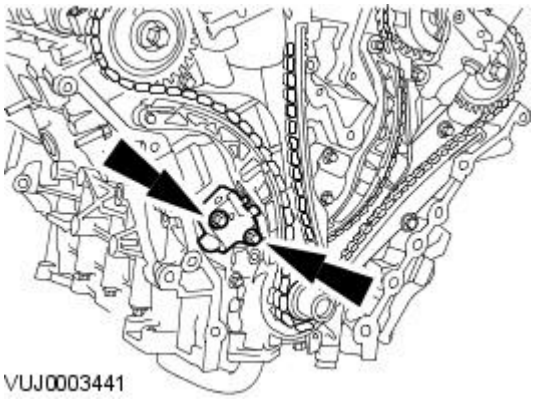

VUJ0003441

56. Install the right-hand timing chain tensioner.

- Tighten to 25 Nm.

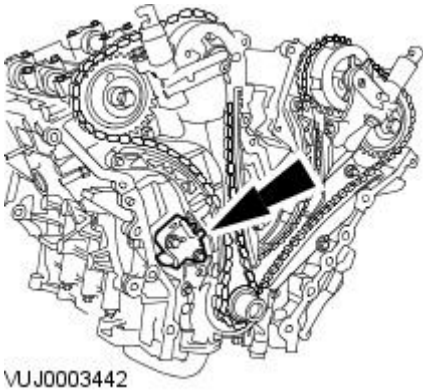

VUJ0003442

57. Release the tension in the right-hand timing chain tensioner.

- Remove the retaining tool.

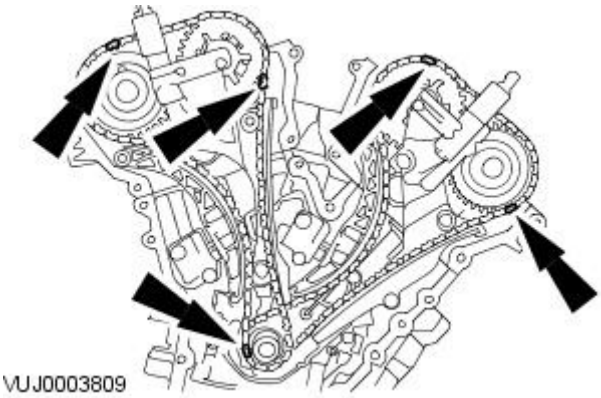

58. CAUTION: Make sure the right-hand timing chain alignment marks have remained correctly positioned to the camshaft sprocket and crankshaft sprocket alignment marks.

Make sure all the timing chain alignment marks are in the positions shown.

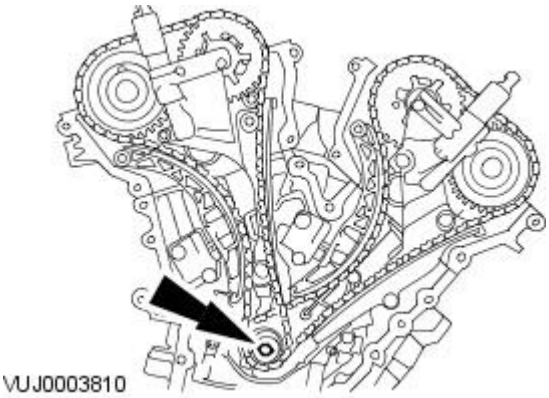

59. CAUTION: Do not rotate the crankshaft counterclockwise. The timing chains may bind causing engine damage.

Install the crankshaft pulley retaining bolt and washer.

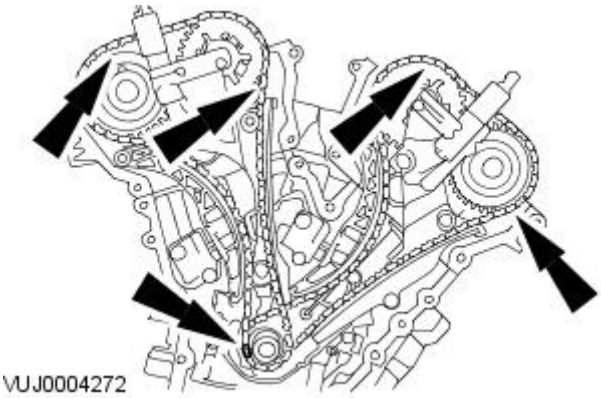

60. CAUTION: Do not rotate the crankshaft counterclockwise. The timing chains may bind causing engine damage.

Check the engine valve timing is correctly set.

- Rotate the crankshaft two complete turns clockwise. Make sure the alignment marks on the camshaft sprockets are in the positions shown when the crankshaft keyway is at the 11 O'clock position.

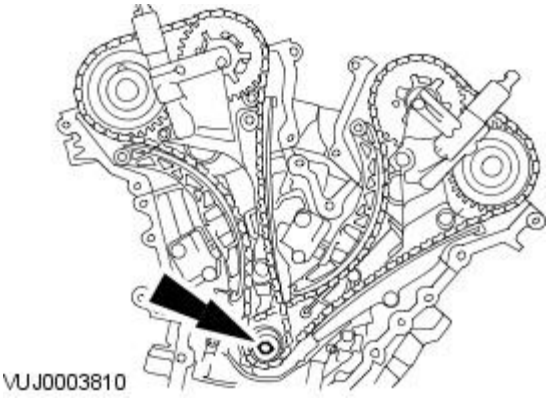

61. CAUTION: Do not rotate the crankshaft counterclockwise. The timing chains may bind causing engine damage.

Remove the crankshaft pulley retaining bolt and washer.

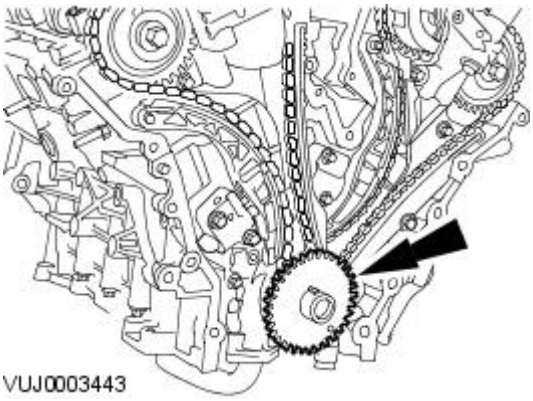

62. NOTE: Make sure the CKP sensor pulse wheel is correctly installed with the teeth pointing outwards.

Install the CKP sensor pulse wheel.

63. Carry out a valve clearance check.
For additional information, refer to Valve Clearance Check in this section.

64. Install new front timing cover gaskets.

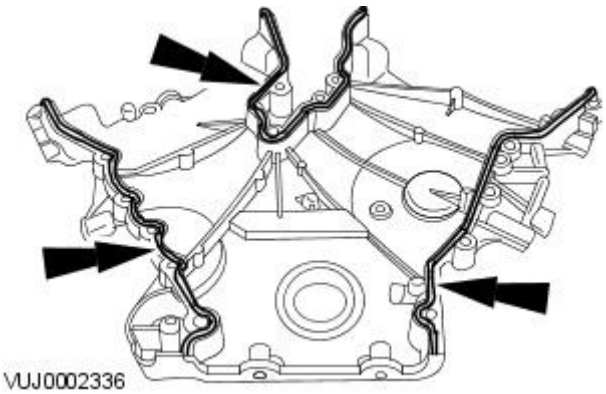

65. NOTE: Prior to applying sealer clean the front cover to engine block and cylinder head sealing surfaces with metal surface cleaner.

Apply a 6 mm diameter dot of silicone sealant meeting Jaguar specification to the indicated locations.

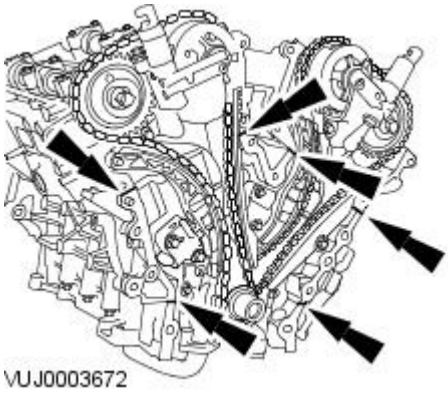

66. NOTE: The engine front cover retaining bolts numbered 3,4,10 and 11 are longer than the retaining bolts numbered 1,2,5,6,7,8,9,12,13,15 and 16. The retaining bolt numbered 14 is a retaining bolt with a stud head.

Install the engine front cover, completing the tightening sequence .

- Tighten to 25 Nm.

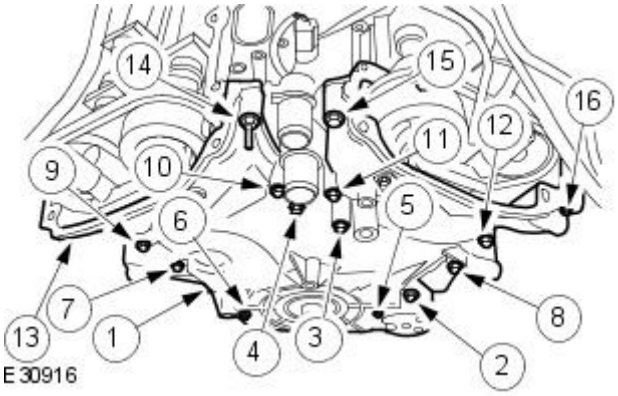

67. NOTE: Apply an 10 mm dot of silicone gasket and sealant meeting Jaguar specification to the engine block and front cover mating surface.

• NOTE: Loosely install the oil pan to transmission housing bolts.

• NOTE: Tighten all oil pan retaining bolts with in six minutes of applying the sealer.

Install the oil pan rear retaining bolts.

- Complete the tightening sequence.
- Tighten to 25 Nm.

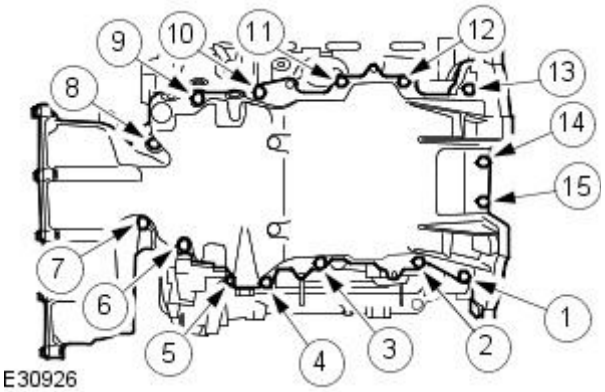

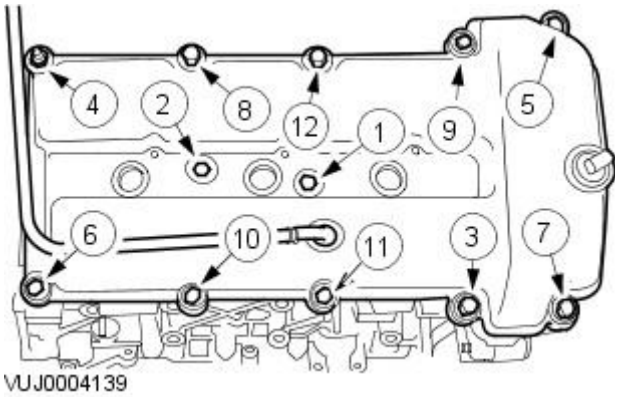

68. NOTE: Right-hand shown, left-hand similar.

Install the valve covers.

- Complete the tightening sequence.
- Tighten to 10 Nm.

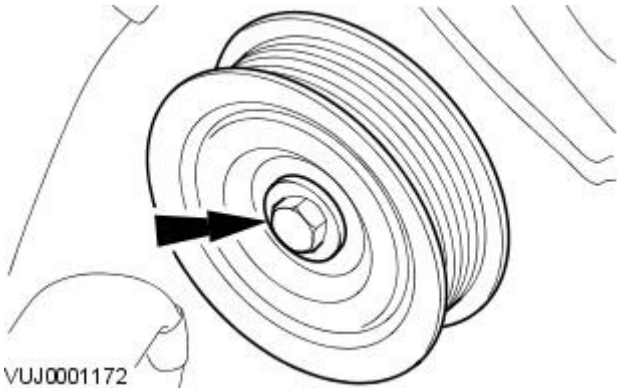

69. Install the left-hand idler pulley.

- Tighten to 25 Nm.

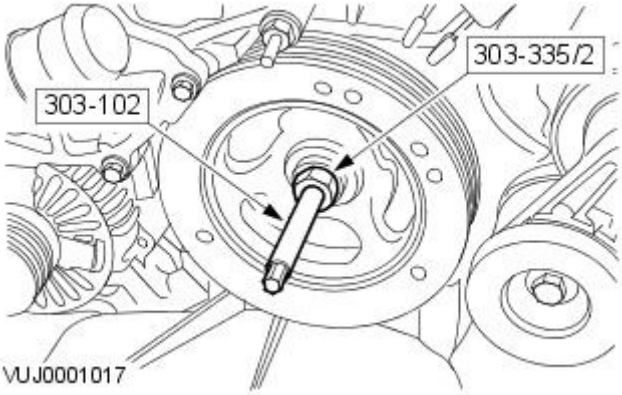

70. Using the special tools, install the crankshaft pulley.

- Coat the crankshaft pulley keyway with silicone gasket sealant meeting Jaguar specification.
- Coat the sealing surfaces of the crankshaft pulley with silicone gasket sealant meeting Jaguar specification.

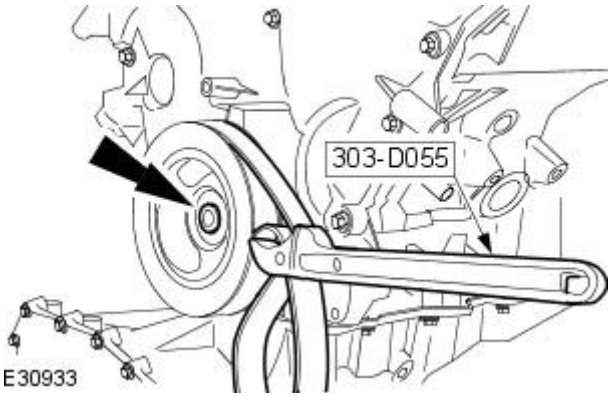

71. Install the crankshaft pulley retaining bolt.

- Torque to 120 Nm.
- Loosen the bolt (minimum 1 turn).
- Torque to 50 Nm.
- Angle Torque to 90°.

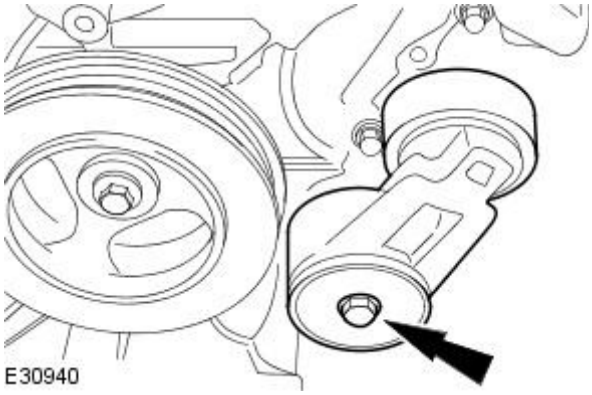

72. Install the accessory drive belt tensioner.

- Tighten 45 Nm.

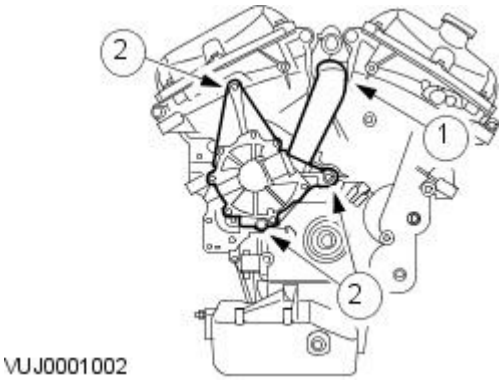

73. Install the water pump and coolant hose assembly.

1. Attach the hose.
2. Install the water pump and coolant hose assembly.

- Tighten to 25 Nm.

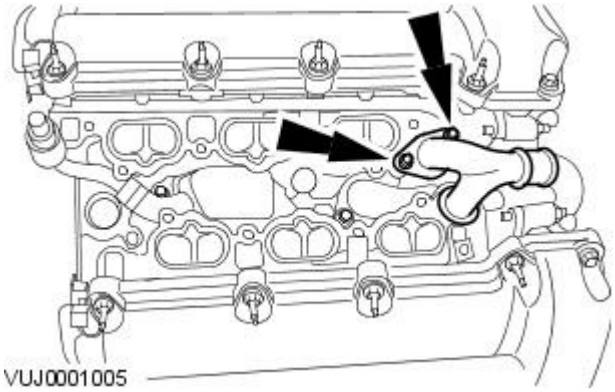

74. NOTE: Install new coolant crossover O-ring seals.

Install the coolant crossover tube.

- Tighten to 10 Nm,

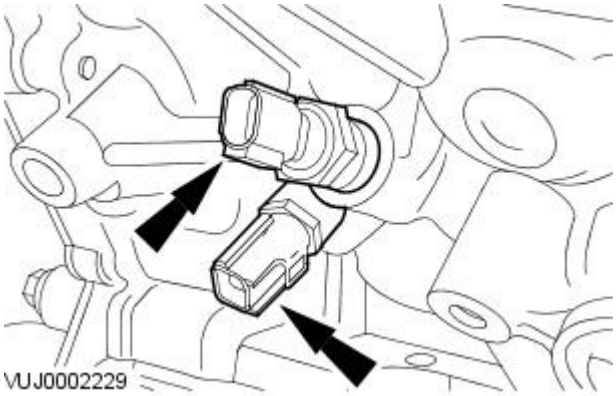

75. Install the engine oil pressure and oil temperature sensors.

- Tighten to 14Nm.

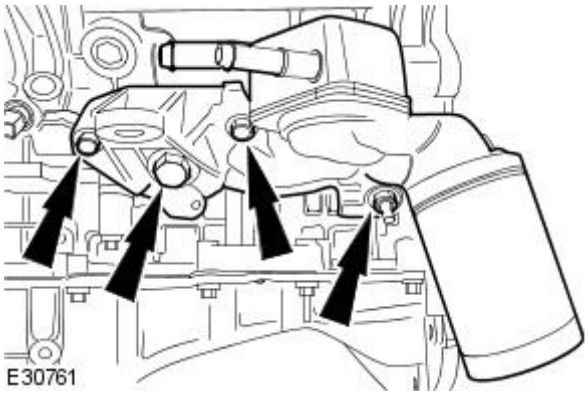

76. NOTE: Install new O-ring seals.

Install the oil filter housing assembly.

- Tighten all oil filter housing retaining bolts to 25 Nm.

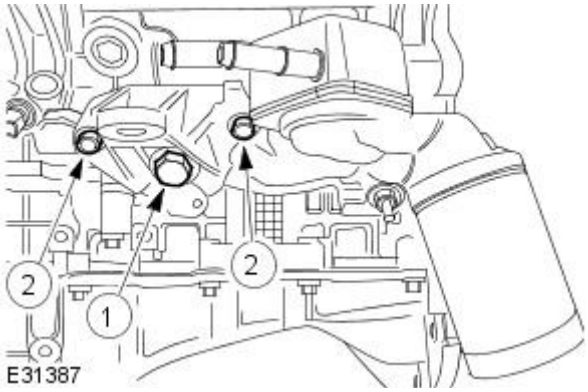

77. Tighten the oil filter housing assembly retaining bolts in sequence.

1. Tighten to 150 Nm.
2. Tighten to 40 Nm + 90 degrees.

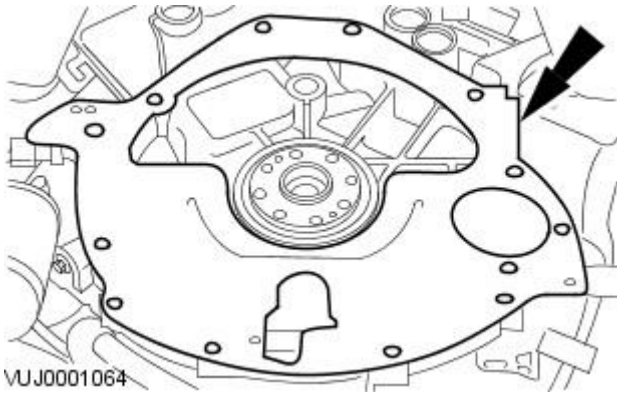

78. Install the engine rear backing plate.

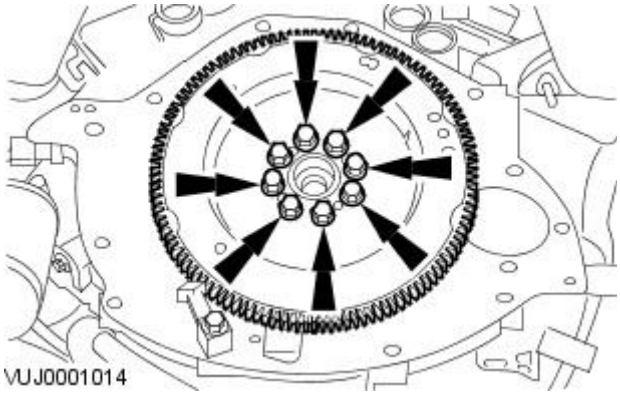

79. Install the flywheel.

- Prevent the engine from rotating.
- Tighten to 80 Nm.

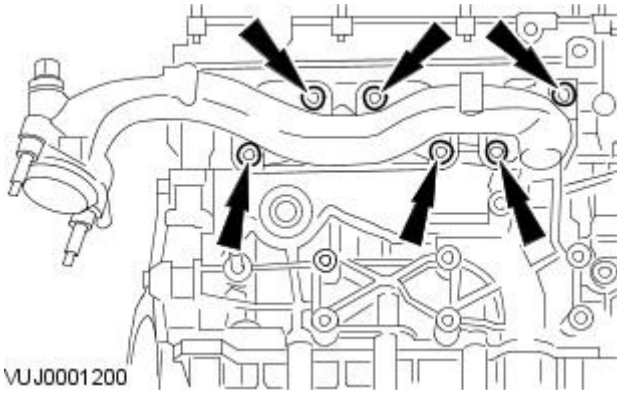

80. NOTE: Right-hand shown, Left-hand similar.

Install the exhaust manifolds.

- Tighten to 25 Nm.

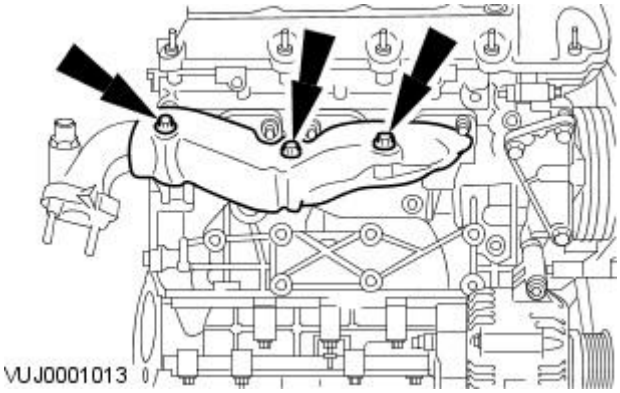

81. NOTE: Right-hand shown, Left-hand similar.

Install the exhaust manifold heat shields.

- Tighten to 10 Nm.

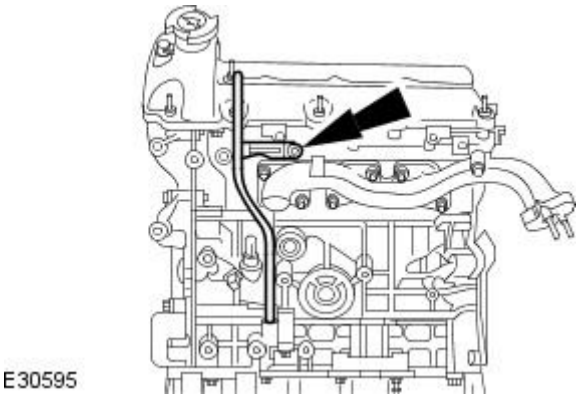

82. NOTE: Install a new O-ring seal.

Install the oil level indicator tube.

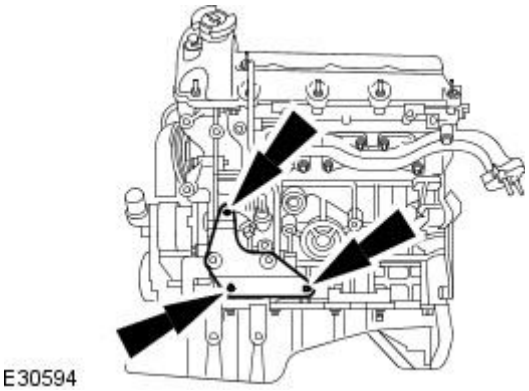

83. Install the A/C compressor mounting bracket.

- Tighten to 25 Nm.

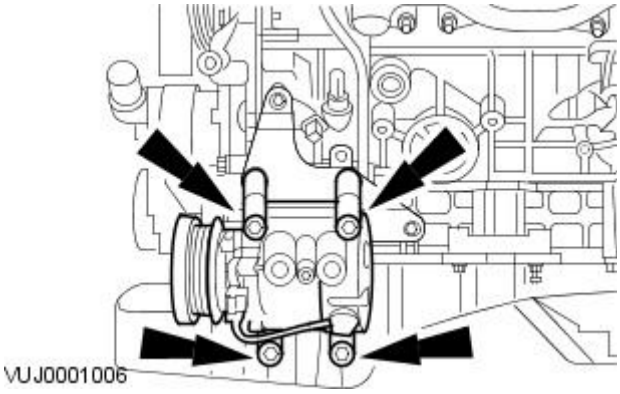

84. Install the air conditioning (A/C) compressor.

- Tighten to 25 Nm.

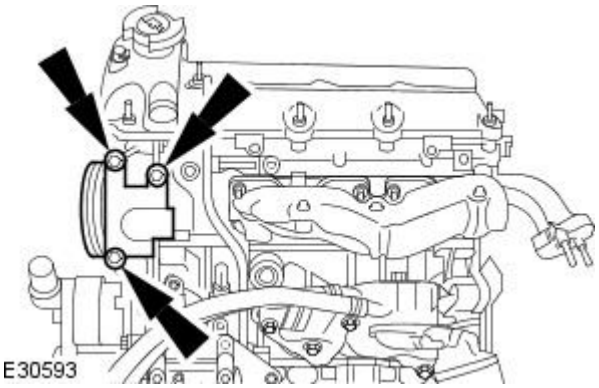

85. Install the power steering pump.

- Tighten to 25 Nm.

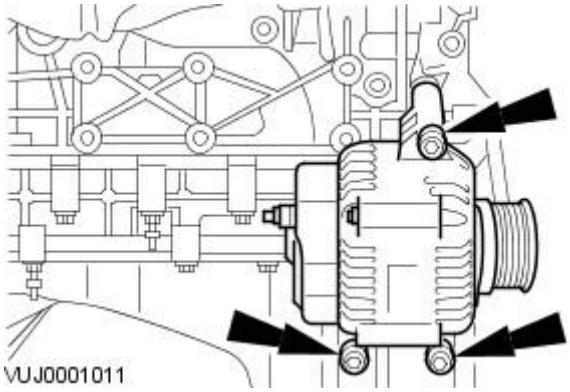

86. Install the generator.

- Tighten to 48 Nm.

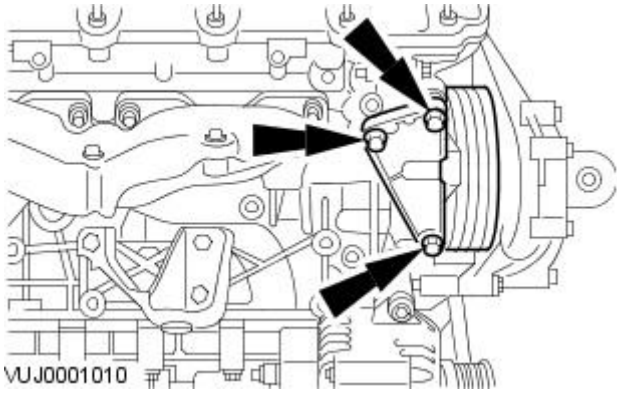

87. Install the right-hand idler pulley.

- Tighten to 25 Nm.

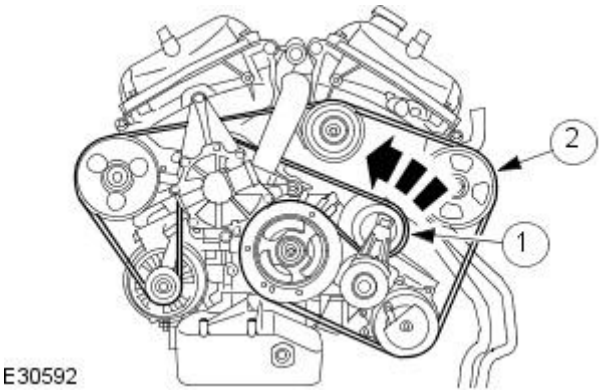

88. Install the accessory drive belt.

1. Use a 3/8 inch drive bar to release the accessory drive belt tensioner.
2. Install the accessory drive belt.

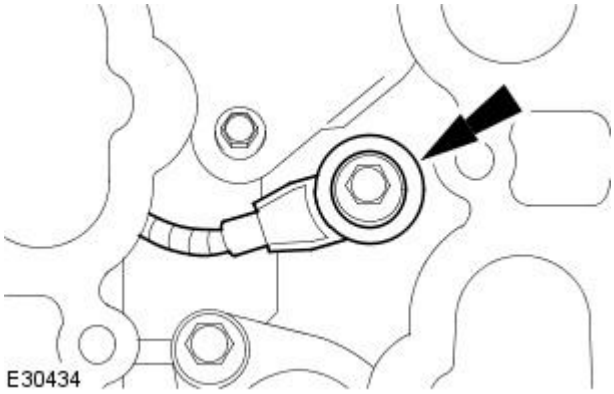

89. Install the left-hand knock sensor.

- Tighten to 25 Nm.

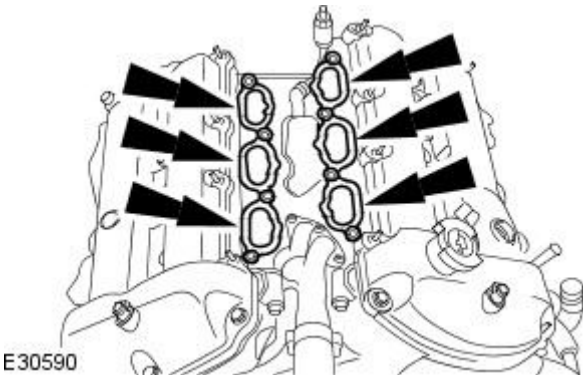

90. Install new lower intake manifold gaskets.

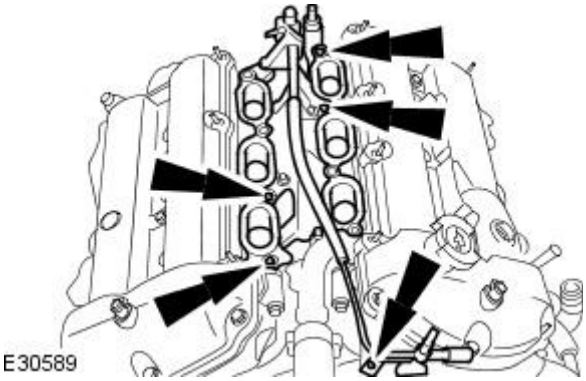

91. Install the lower intake manifold and injector supply manifold.

- Tighten to 10 Nm.

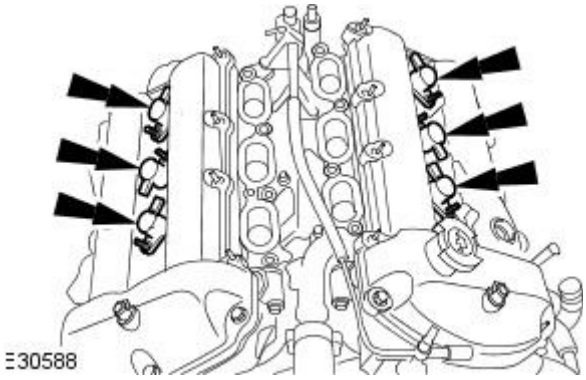

92. Install the ignition coils.

- Tighten to 10 Nm.

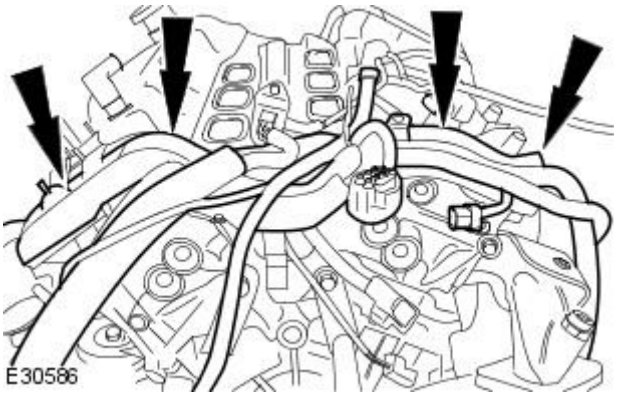

93. Install the engine wiring harness.

- Tighten to 10 Nm.

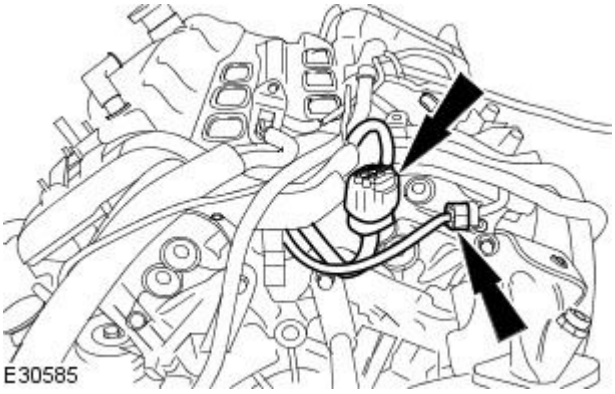

94. Connect the engine wiring harness electrical connectors.

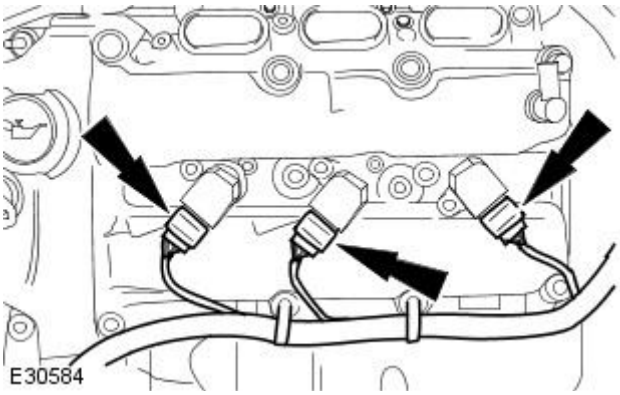

95. Connect the left-hand ignition coils.

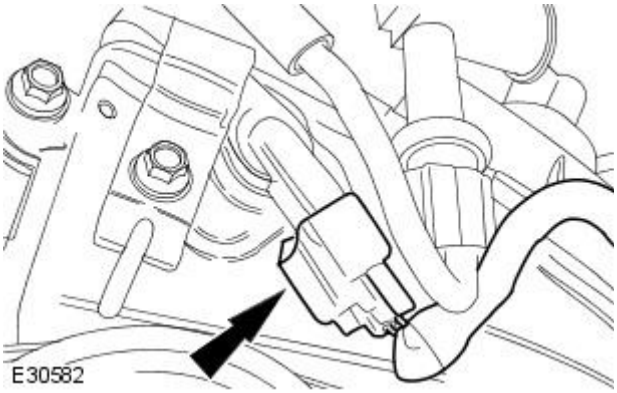

96. Connect the left-hand camshaft position sensor.

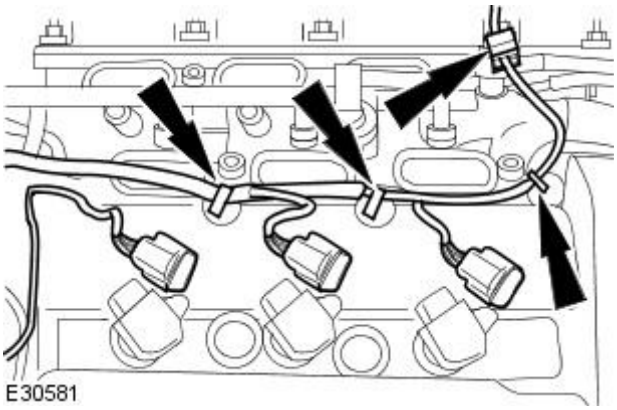

97. Attach the engine harness.

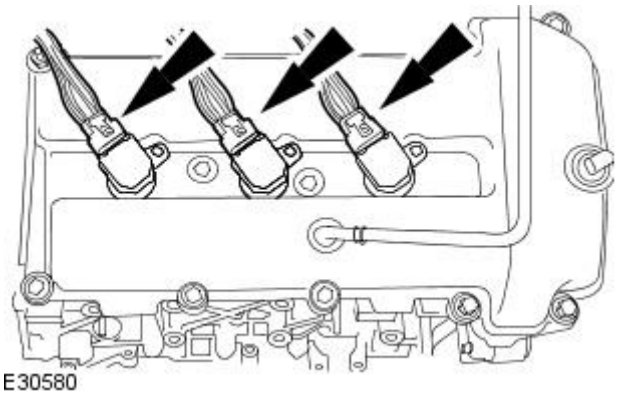

98. Connect the right-hand ignition coils.

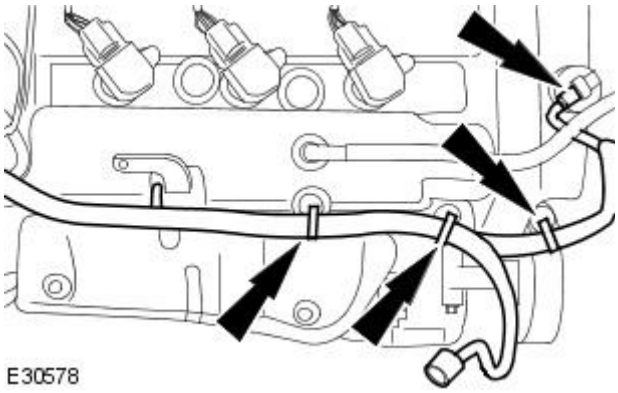

99. Attach the engine harness.

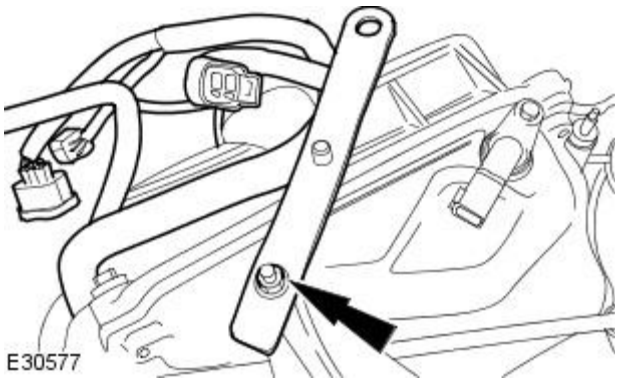

100. Attach the engine harness retaining bracket.

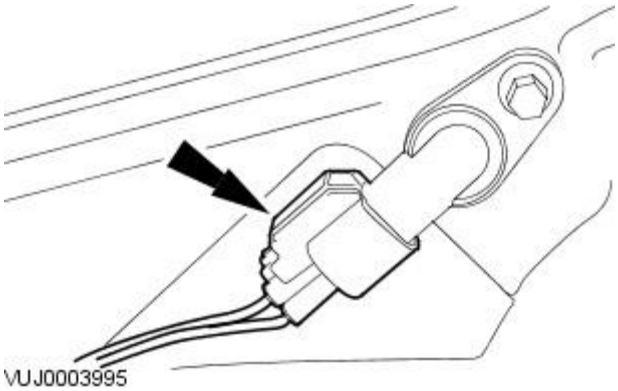

101. Disconnect the right-hand camshaft position sensor.

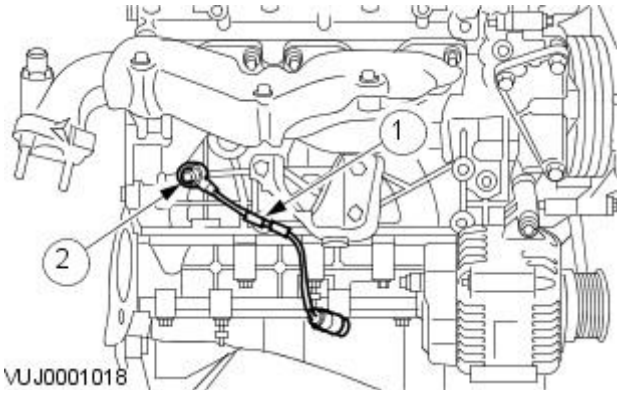

102. Install the rear knock sensor.

1. Attach the knock sensor wiring harness.
2. Install the rear knock sensor.

- Tighten to 25 Nm.

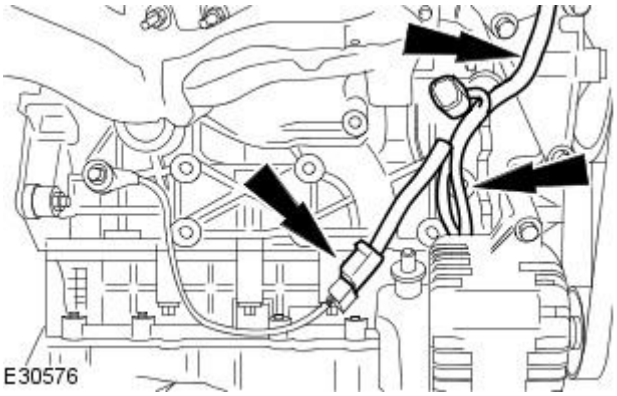

103. Attach engine harness.

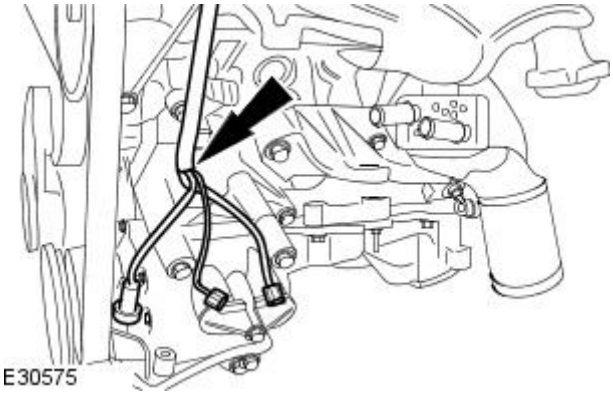

104. Attach the engine harness.

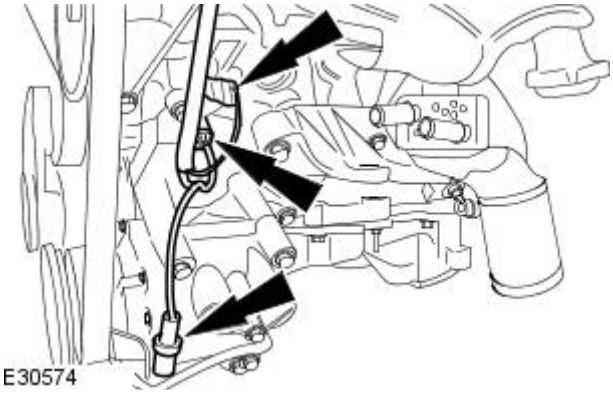

105. Connect the electrical connectors.

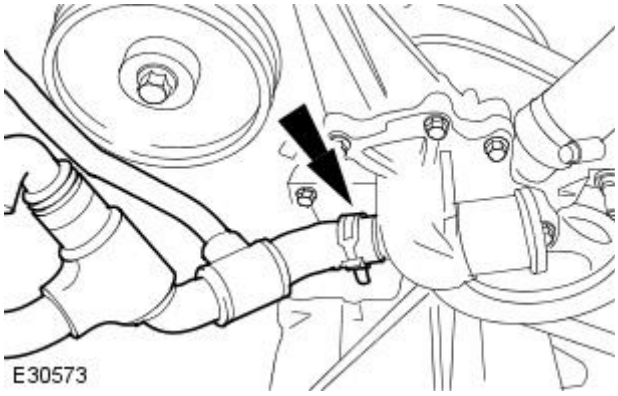

106. Install the coolant hose.

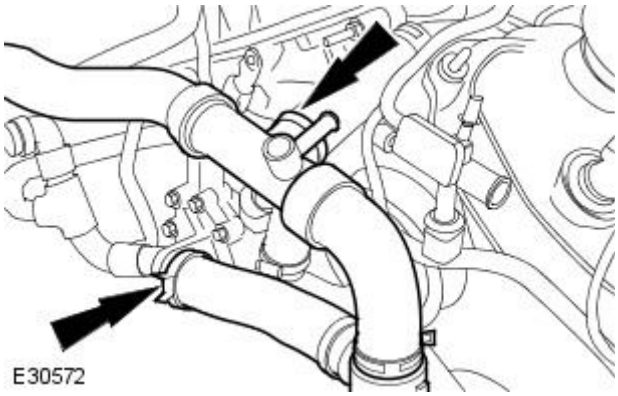

107. Install the coolant hose.

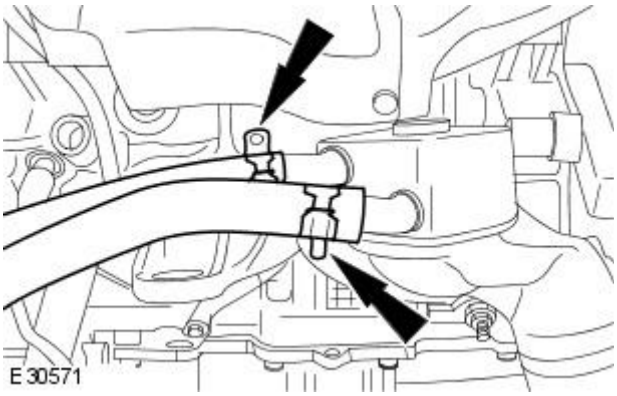

108. Connect the oil cooler coolant hoses.

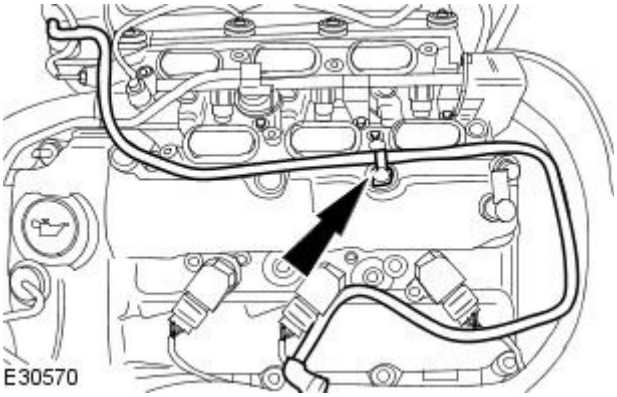

109. Install the evaporative emission purge valve hose.

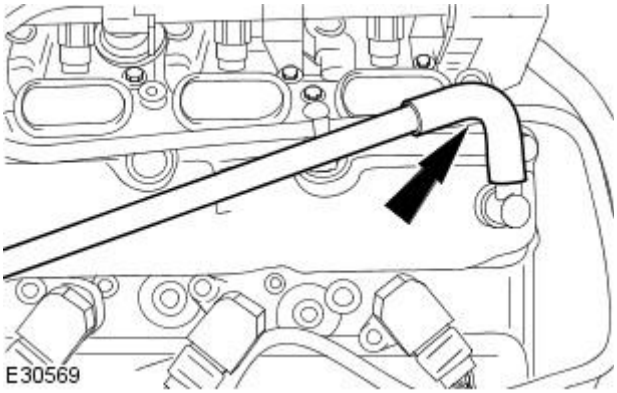

110. Install the engine breather hose.

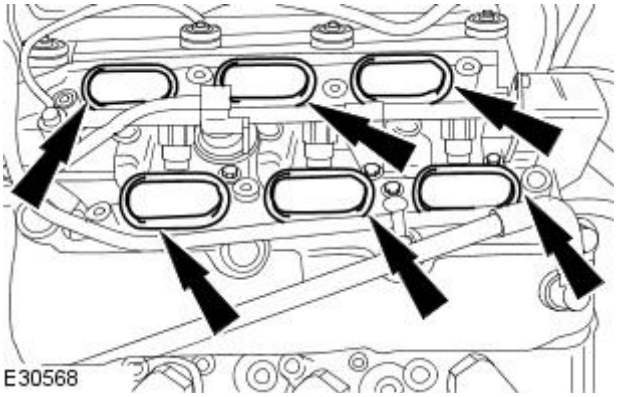

111. Install new intake manifold gaskets.

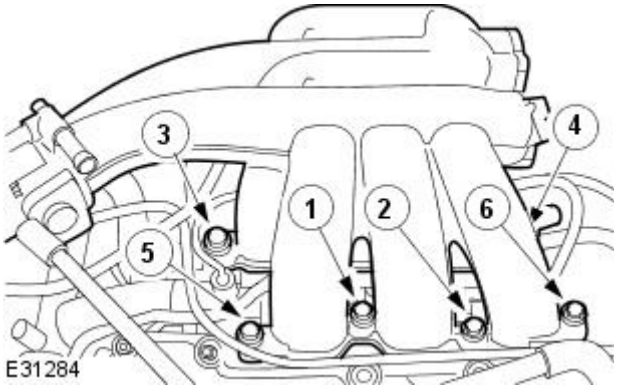

112. NOTE: The intake manifold retaining bolts in position 1,2,3 and are longer than the retaining bolts in position 4,5 and 6.

To install, reverse the removal procedure.

- Install new intake manifold gaskets.
- Tighten to 10 Nm.

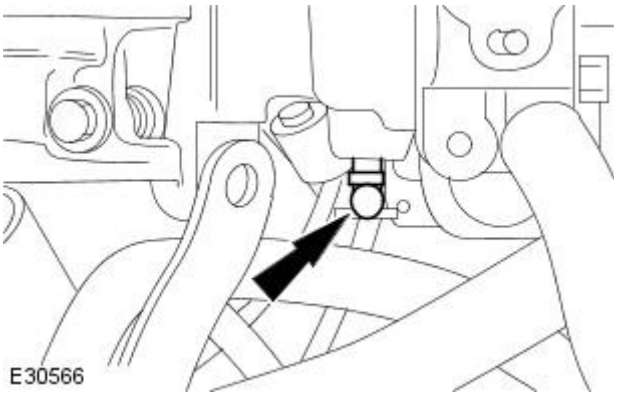

113. Connect the evaporative emission canister purge valve transfer pipe.

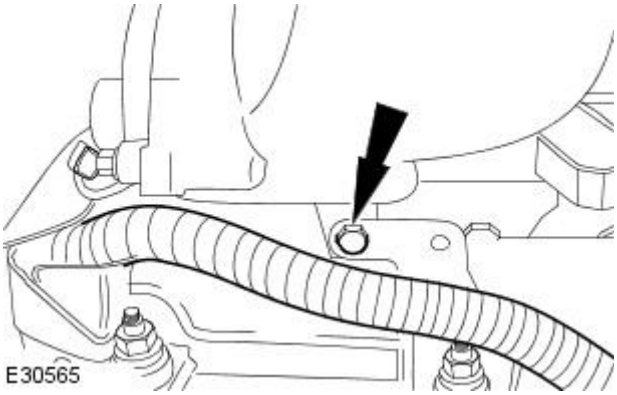

114. Attach the intake manifold rear retaining bracket.

- Tighten to 10 Nm.

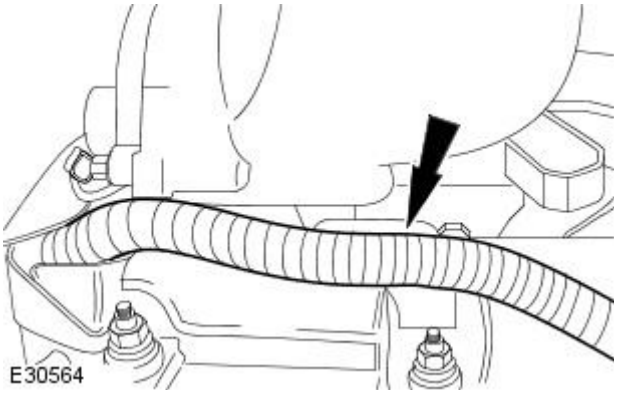

115. Attach the engine wiring harness from the intake manifold rear retaining bracket.

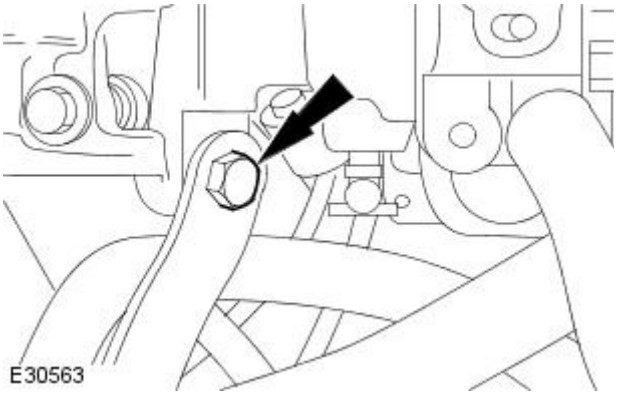

116. Attach the intake manifold front retaining bracket.

- Tighten to 10 Nm.

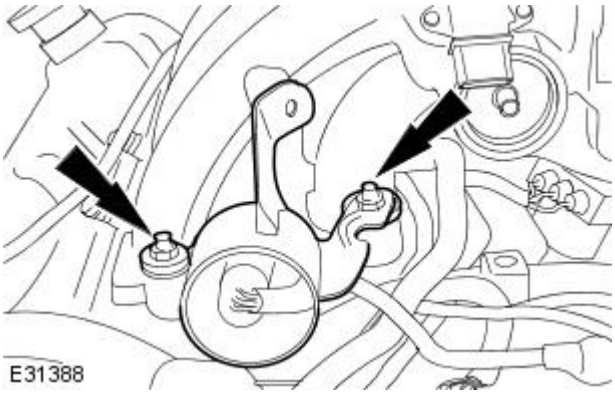

117. Install the fuel pressure regulator bracket.

- Tighten to 10 Nm.

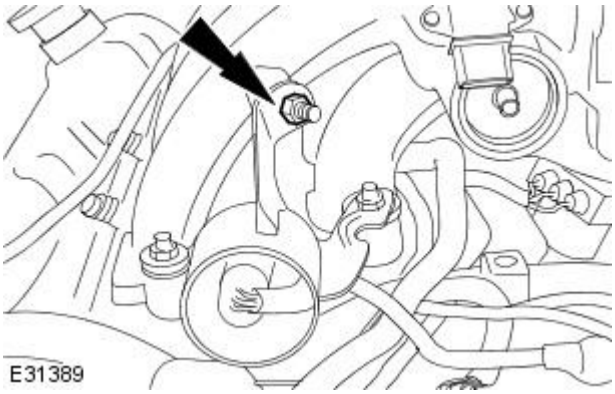

118. Tighten to 7 Nm.

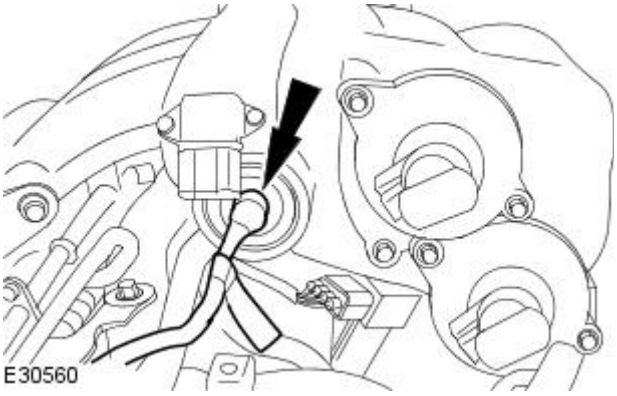

119. Connect the fuel pressure regulator vacuum hose.

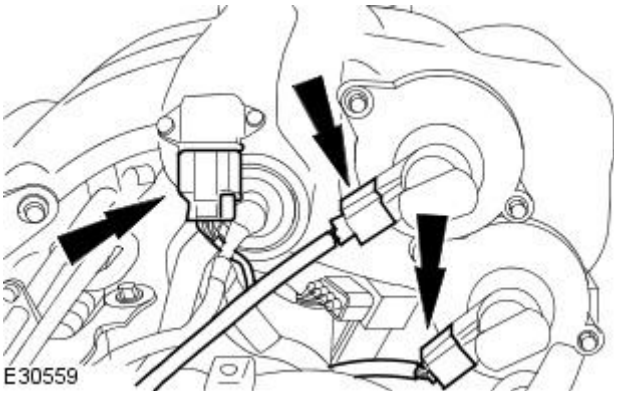

120. Connect the electrical connectors.

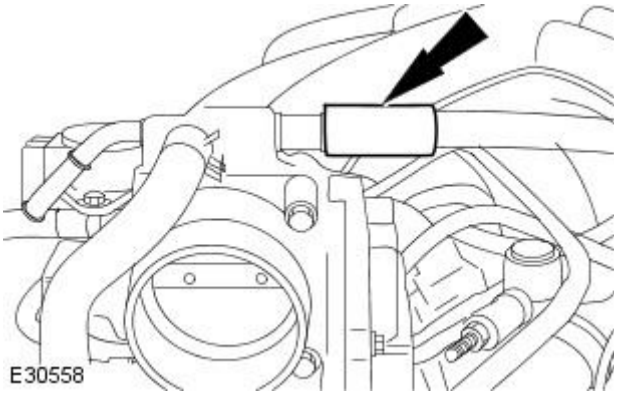

121. Connect the positive crankcase ventilation (PCV) hose.

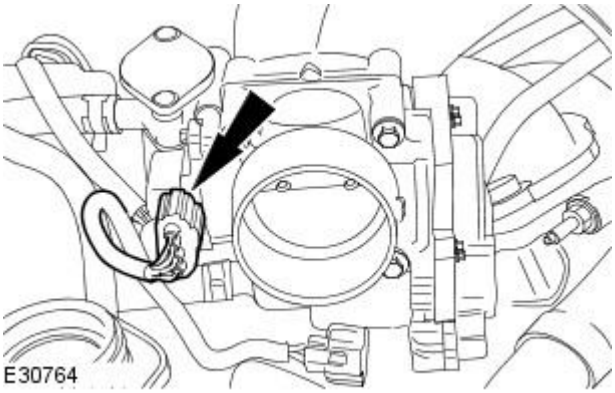

122. Connect the throttle position sensor.

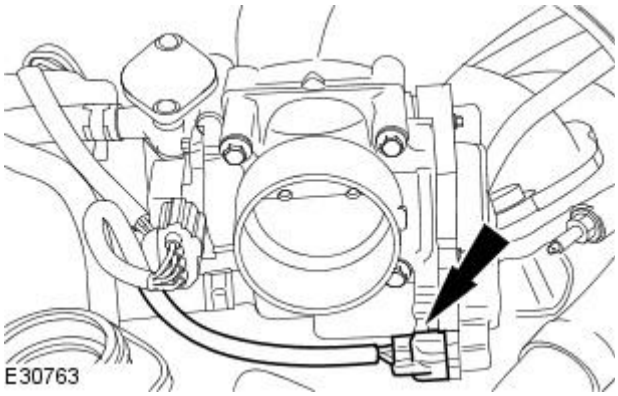

123. Connect the throttle motor electrical connector.

Engine - 2.0L NA V6 - AJV6 / 2.5L NA V6 - AJV6 / 3.0L NA V6 - AJ27 - EngineVehicles With: 5-Speed Manual Transmission - MT75 / 6-Speed Manual Transaxle - MMT6

Installation

Special Tool(s)	
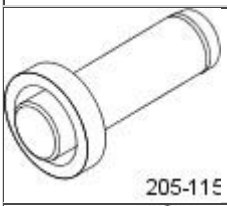 205-115	Halfshaft oil seal installer 205-115
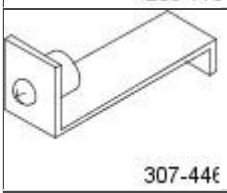 307-446	Link shaft limiting tool 307-446
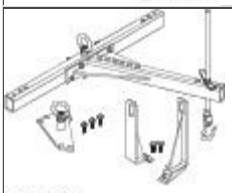 303707	Engine lifting kit 303-707
HTJ12002	Powertrain Assembly Jack HTJ12000-2
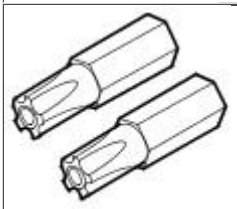 418-535	5 Point Security Torx Bit 418-535

Installation

All vehicles

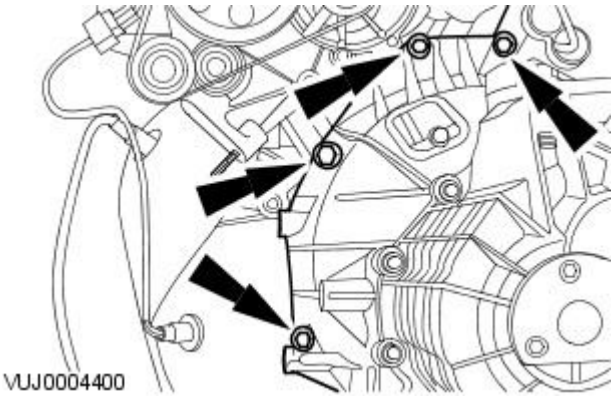

1. Install the transaxle.

- Tighten to 47 Nm.

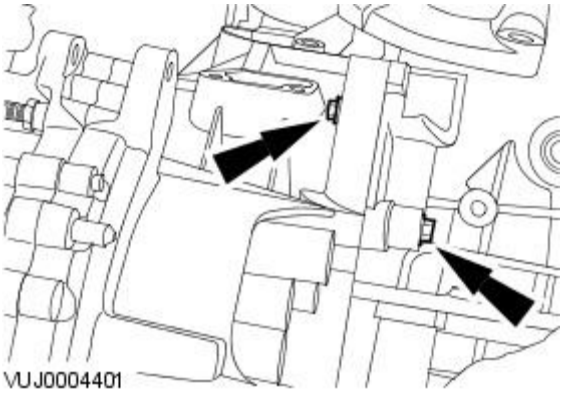

2. Install the transaxle retaining bolts.

- Tighten to 47 Nm.

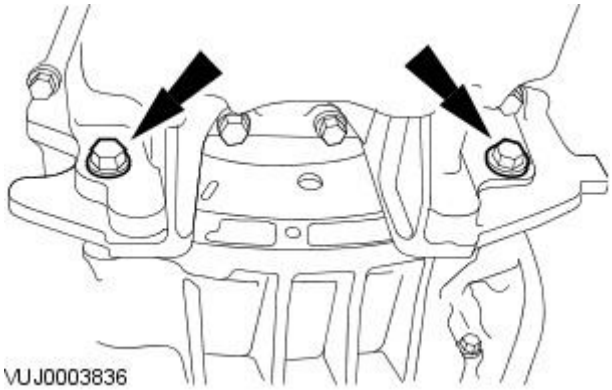

3. Install the transaxle retaining bolts.

- Tighten to 47 Nm.

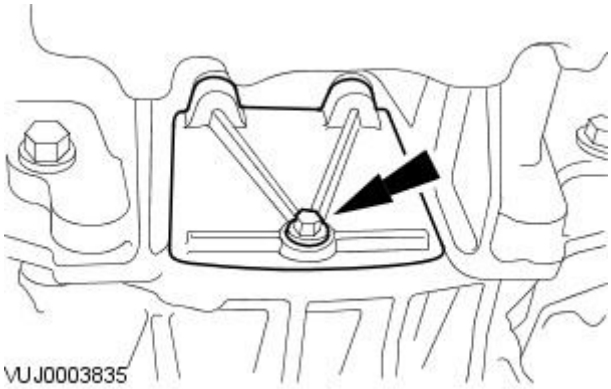

4. Install the access cover.

- Tighten to 10 Nm.

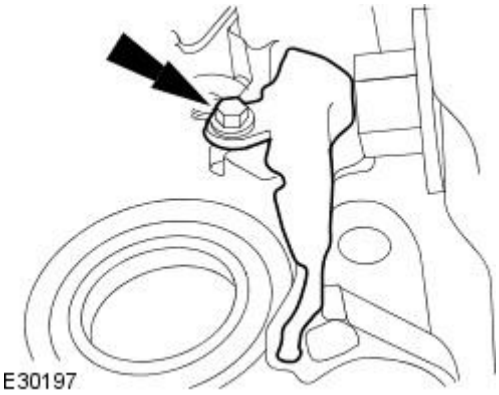

5. Install the dust cover.

- Tighten to 10 Nm.

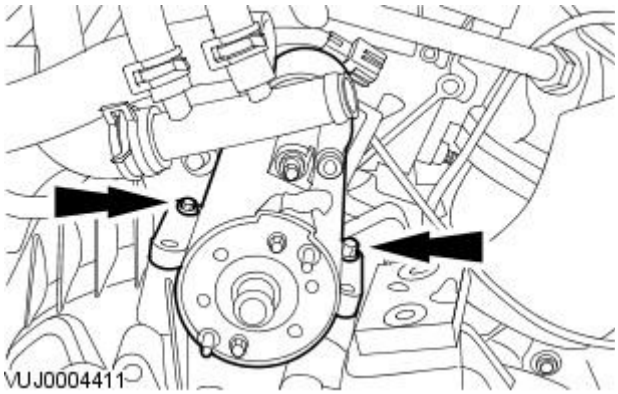

6. Install the starter motor.

- Tighten to 35 Nm.

Vehicles with 2.5L or 3.0L engine

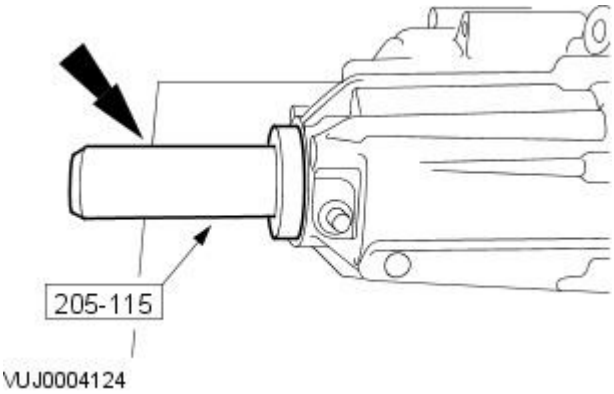

7. NOTE: Using a suitable surface cleaner, WSE-M5B392-A or equivalent, meeting the Jaguar specification. Clean the seal face on the transfer case before installing the new link shaft oil seal.

Using the special tool, install a new link shaft oil seal.

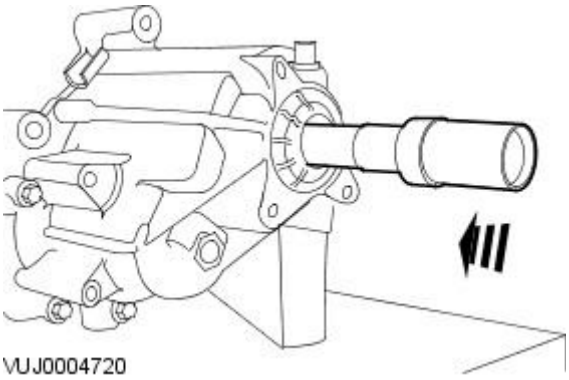

8. Install the link shaft.

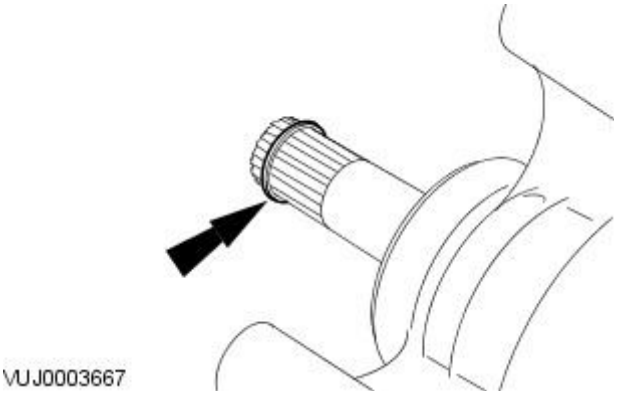

9. Install a new link shaft snap ring.

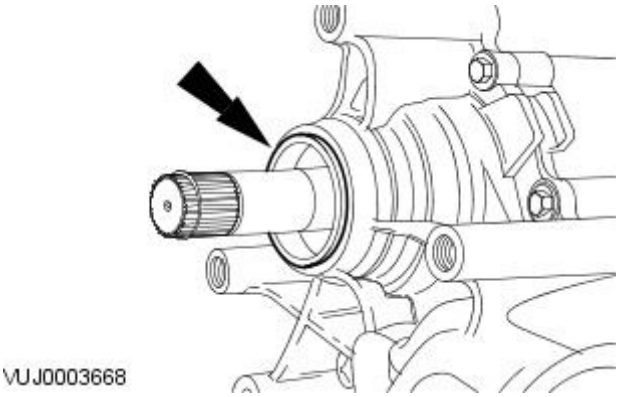

10. Install a new transfer case O-ring seal.

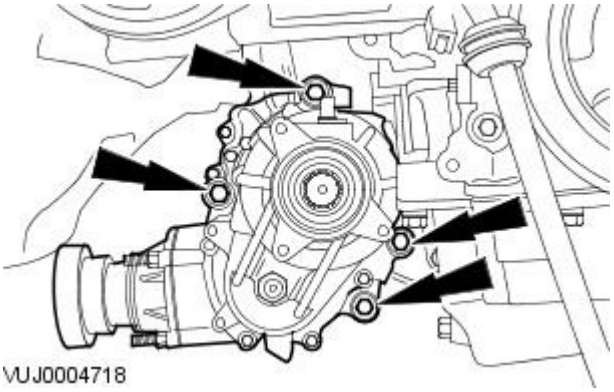

11. NOTE: Engage the link shaft into the transaxle.

Install the transfer case.

- Tighten to 90 Nm.

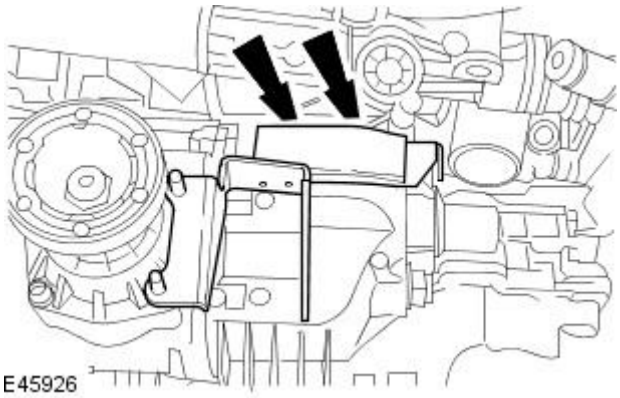

12. NOTE: Do not tighten the engine roll restrictor bracket top retaining bolts at this stage at this stage.

Install the engine roll restrictor bracket.

- Install the engine roll restrictor bracket top retaining bolts.

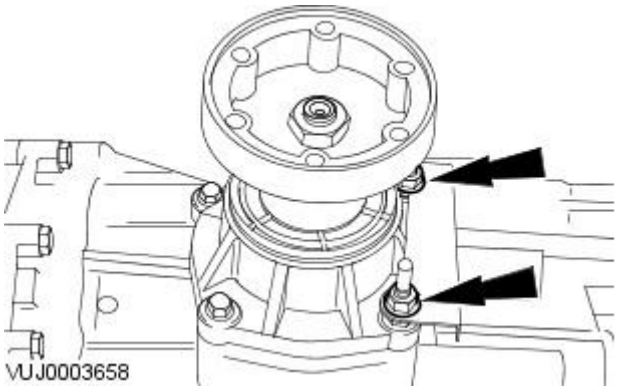

13. NOTE: Do not tighten the engine roll restrictor bracket retaining nuts at this stage.

Install the engine roll restrictor bracket.

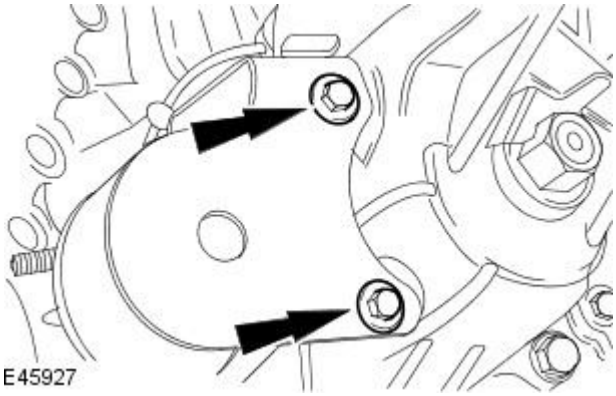

14. Install the engine roll restrictor bracket side retaining bolts.

- Tighten to 35 Nm.

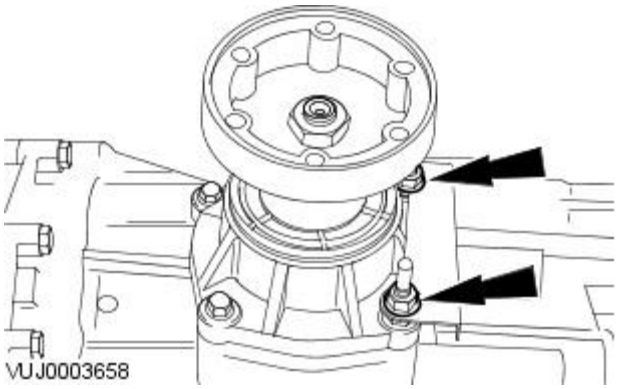

15. Tighten the engine roll restrictor bracket retaining nuts.

- Tighten to 35 Nm.

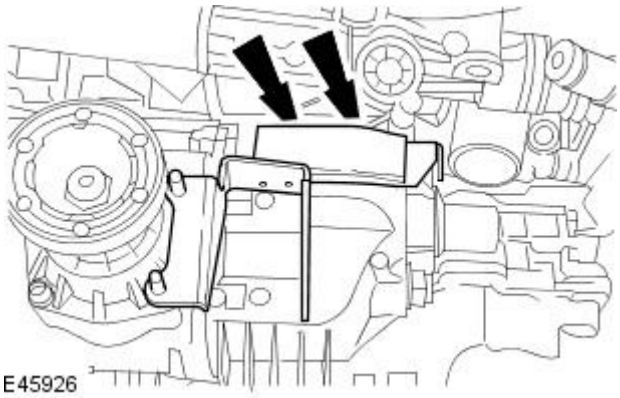

16. Tighten the engine roll restrictor bracket top retaining bolts.

- Tighten to 55 Nm.

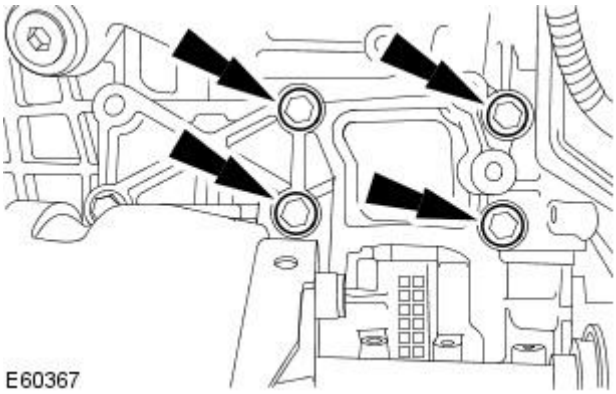

17. NOTE: Do not tighten the catalytic converter retaining bolts at this stage.

Install the catalytic converter mount bracket.

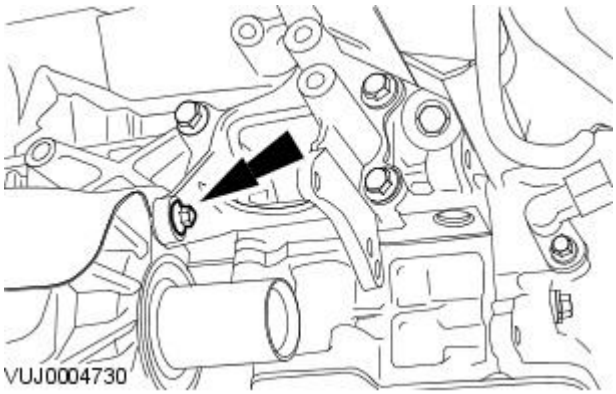

18. Install the catalytic converter mount bracket retaining bolt.

- Tighten to 25 Nm.

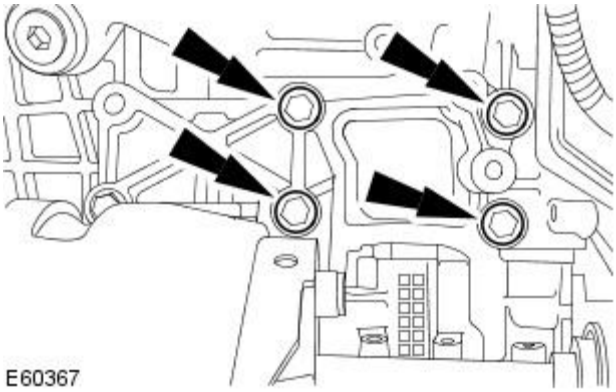

19. Tighten the catalytic converter mount bracket retaining bolts.

- Tighten to 55 Nm.

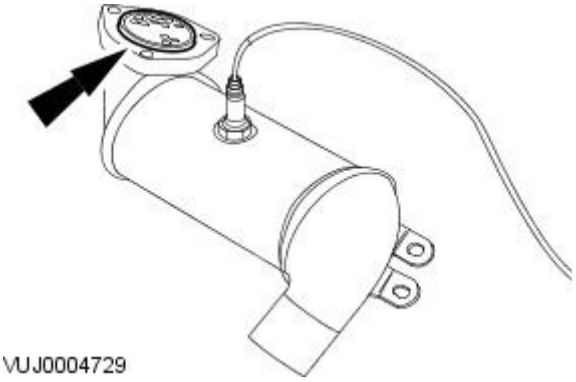

20. Install a new catalytic converter sealing ring.

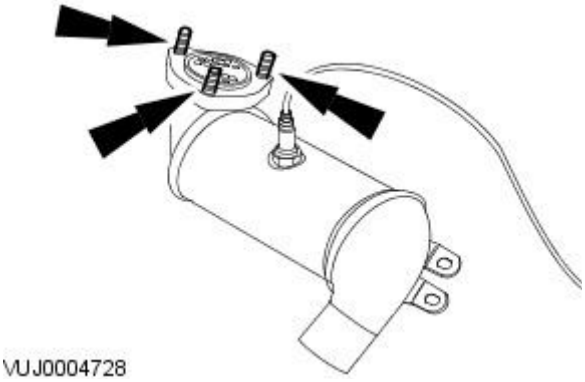

21. Install new catalytic converter retaining studs.

- Tighten to 9 Nm.

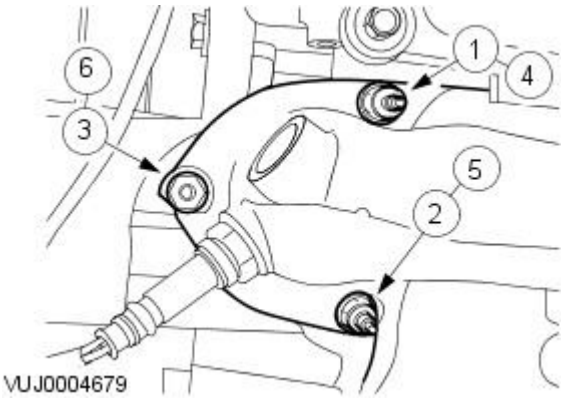

22. CAUTION: Never use jointing compound forward of the catalytic converter. Failure to follow this instruction may result in damage to the component.

• NOTE: Make sure the retaining nuts are tightened twice in the sequence shown.

Install the right-hand catalytic converter.

- Install new retaining nuts.
- Tighten in the sequence shown to 25 Nm.

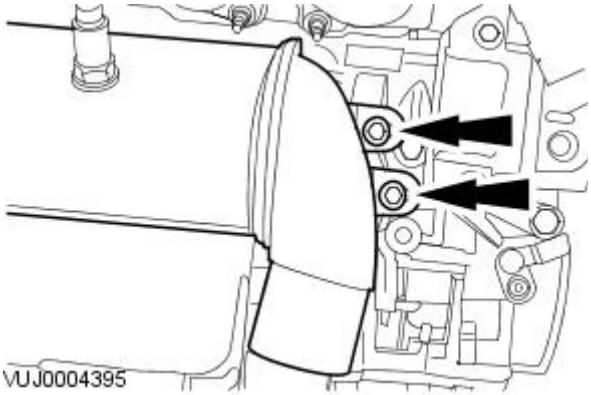

23. Install the right-hand catalytic converter retaining bolts.

- Tighten to 25 Nm.

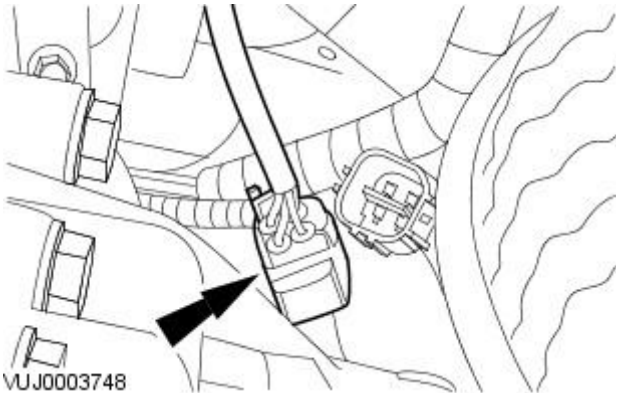

24. Connect the right-hand heated oxygen sensor (HO2S) electrical connector.

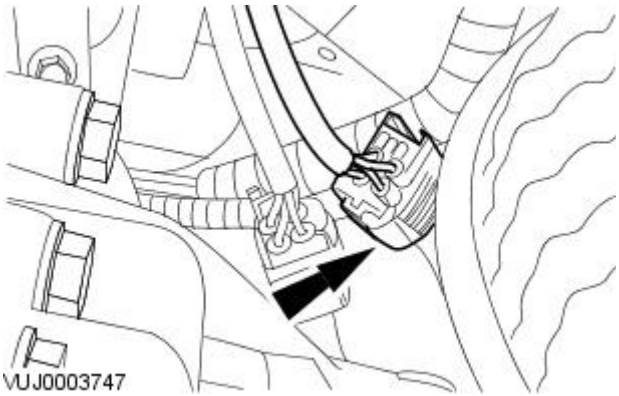

25. Connect the right-hand heated catalyst monitor sensor electrical connector.

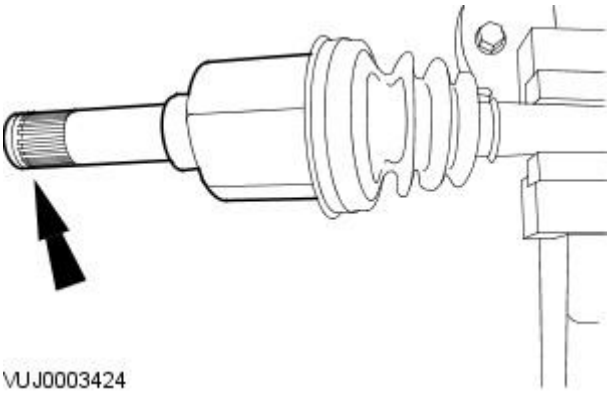

26. Install a new halfshaft snap ring.

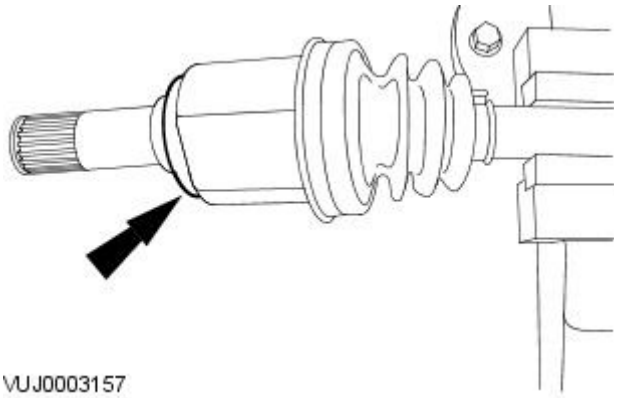

27. Install a new halfshaft seal.

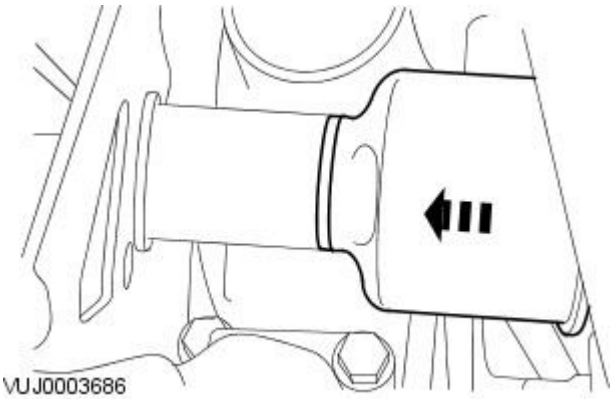

28. CAUTION: Do not use excessive force when engaging the halfshaft to the link shaft. Failure to follow this instruction may result in damage to the component.

• NOTE: Make sure the halfshaft is fully located to the link shaft.

Install the halfshaft.

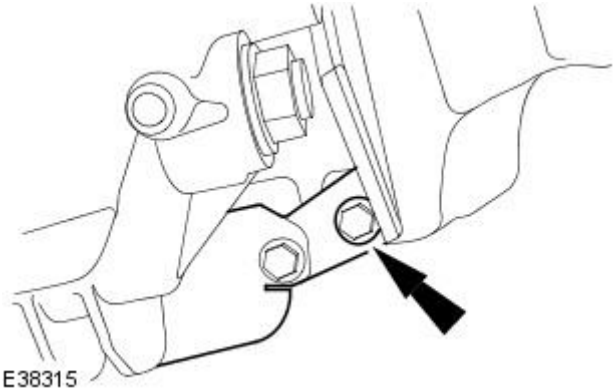

29. Install the transfer case Y bracket.

- Tighten to 55 Nm.

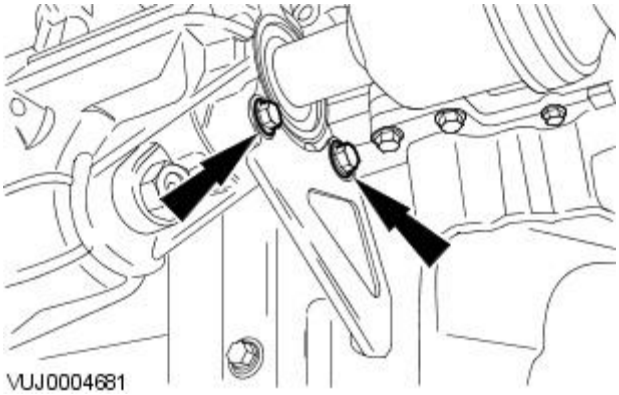

30. Install the transfer case Y bracket retaining bolts.

- Tighten to 25 Nm.

Vehicles with 2.0L engine

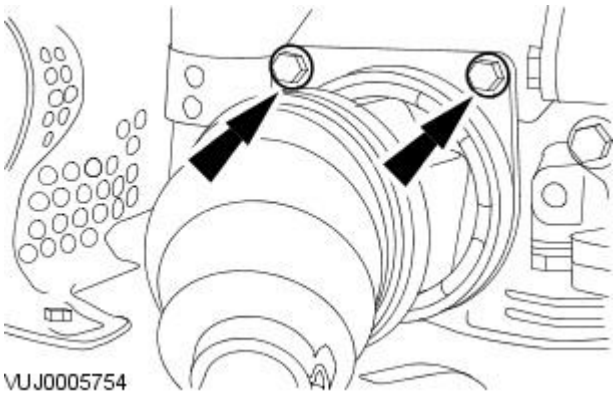

31. Install the halfshaft and intermediate shaft assembly.

- Tighten to 20 Nm.

All vehicles

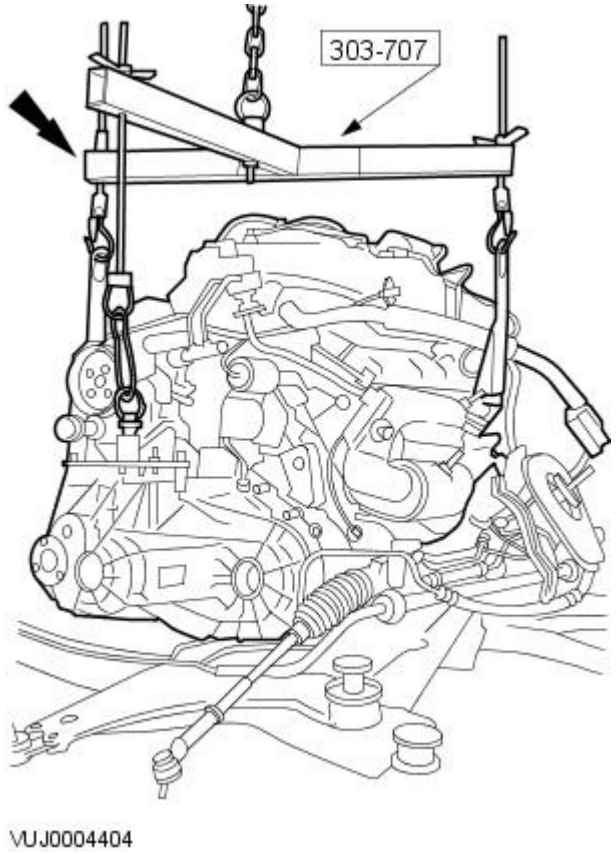

32. CAUTION: Make sure the right-hand drive halfshaft is supported, failure to follow this instruction may result in damage to the component.

Using the special tool, install the engine and transaxle to the subframe.

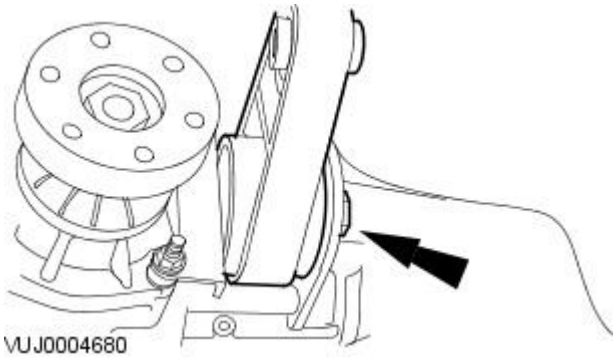

33. Install the engine roll restrictor.

- Tighten to 80 Nm.

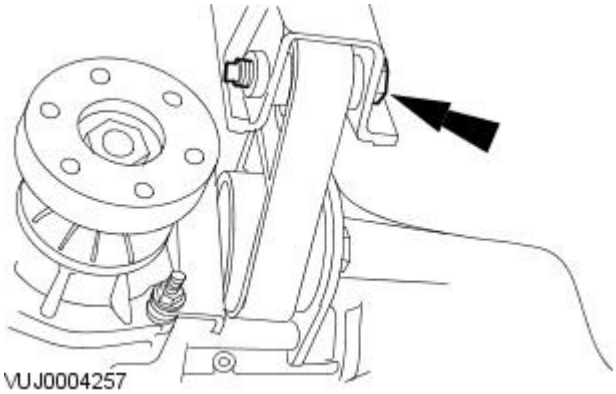

34. Install the engine roll restrictor retaining bolt.

- Tighten to 80 Nm.

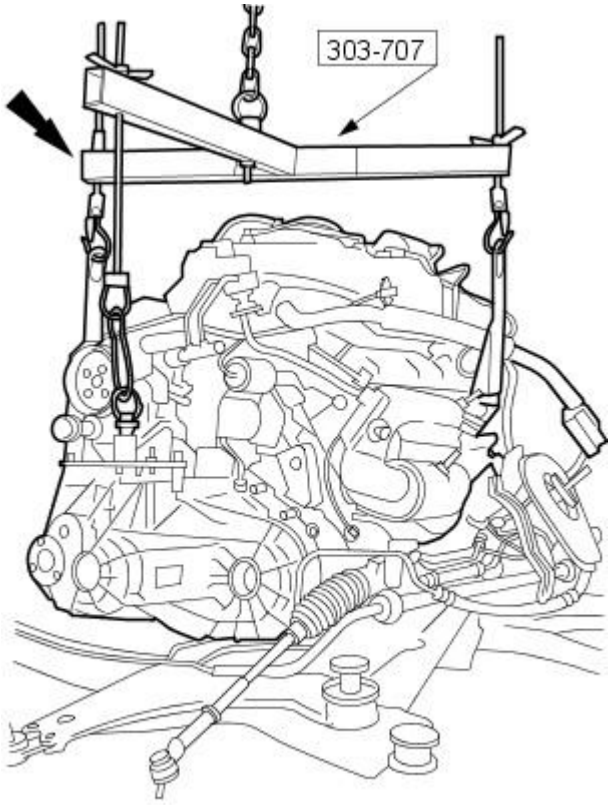

VUJ0004404

35. Remove the special tool.

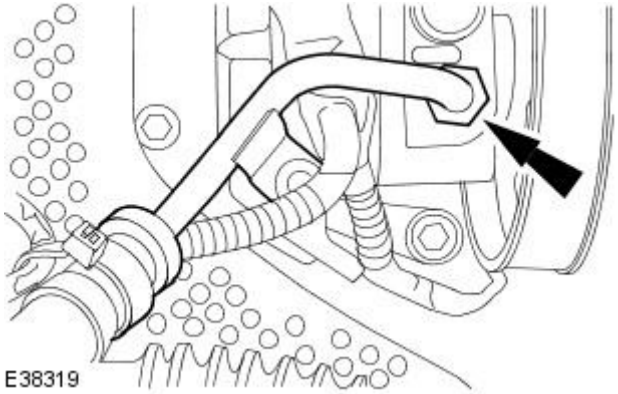

E38319

36. Connect the power steering high-pressure pipe.

- Install a new O-ring seal.
- Tighten to 30 Nm.

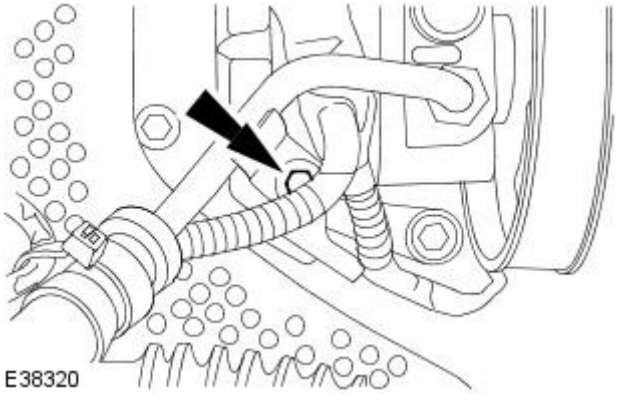

E38320

37. Install the power steering high-pressure pipe retaining bolt.

- Tighten to 25 Nm.

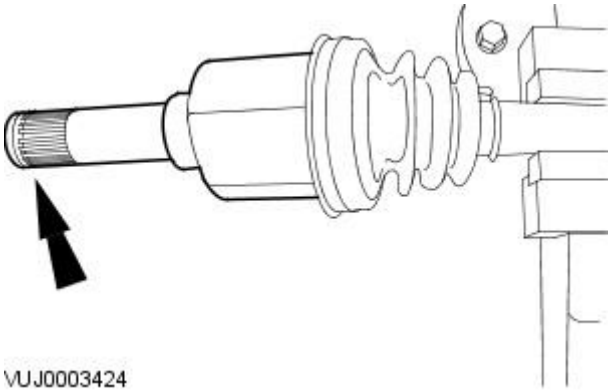

VUJ0003424

38. Install a new halfshaft snap ring.

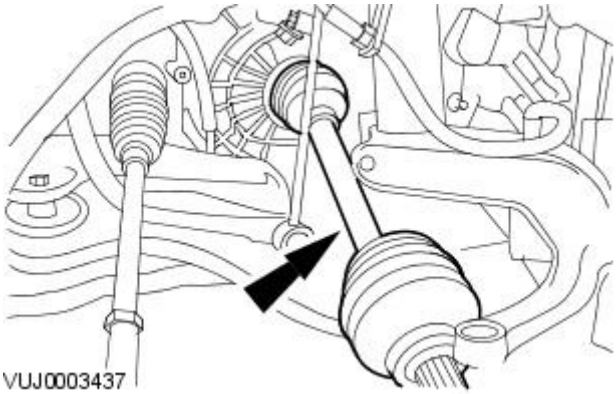

39. Install the left-hand halfshaft.

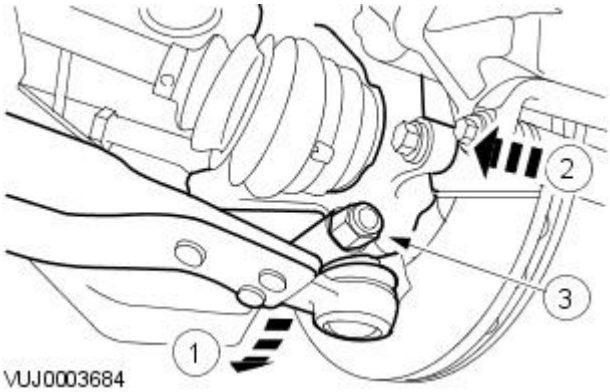

40. NOTE: Left-hand shown, right-hand similar.

• NOTE: Make sure the halfshaft is aligned to the front wheel hub.

Attach the wheel knuckles.

1. Reposition the lower arm.
2. Attach the wheel knuckles.
3. Install the lower arm ball joint retaining bolt.
   1. Tighten to 83 Nm.

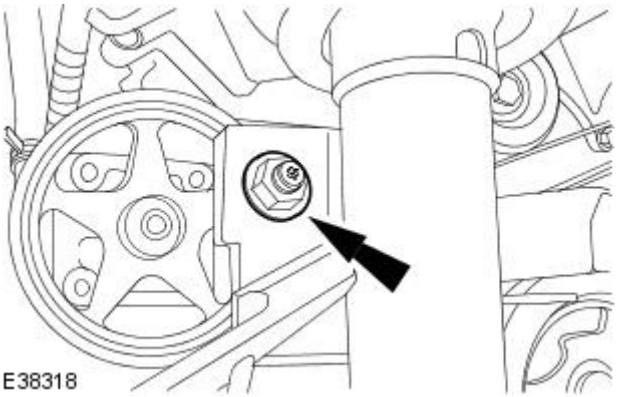

41. NOTE: Right-hand shown, left-hand similar.

Attach the stabilizer bar link arms.

- Tighten to 48 Nm.

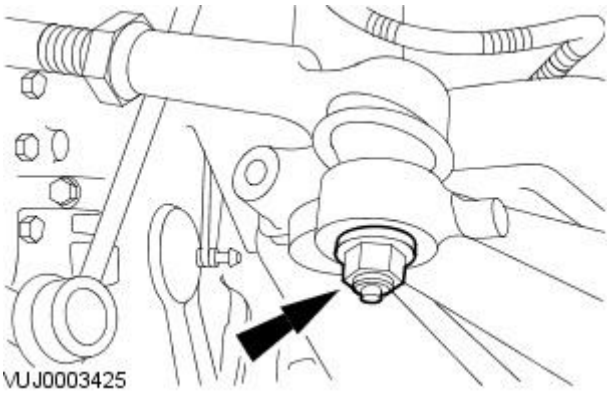

42. NOTE: Left-hand shown, right-hand similar.

Attach the tie rod ends.

- Tighten to 35 Nm.

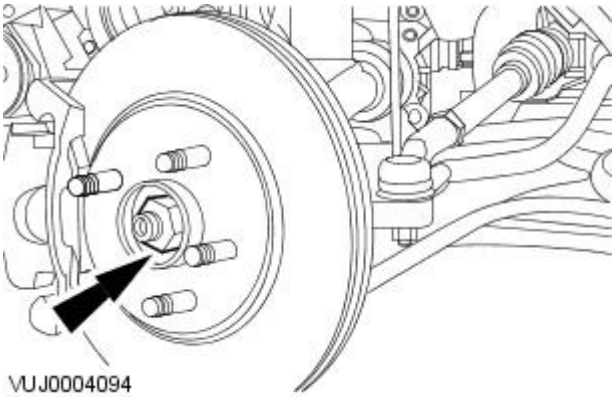

43. NOTE: Left-hand shown, right-hand similar.

• NOTE: Do not tighten the front wheel hub retaining nuts at this stage.

Install the front wheel hub retaining nuts.

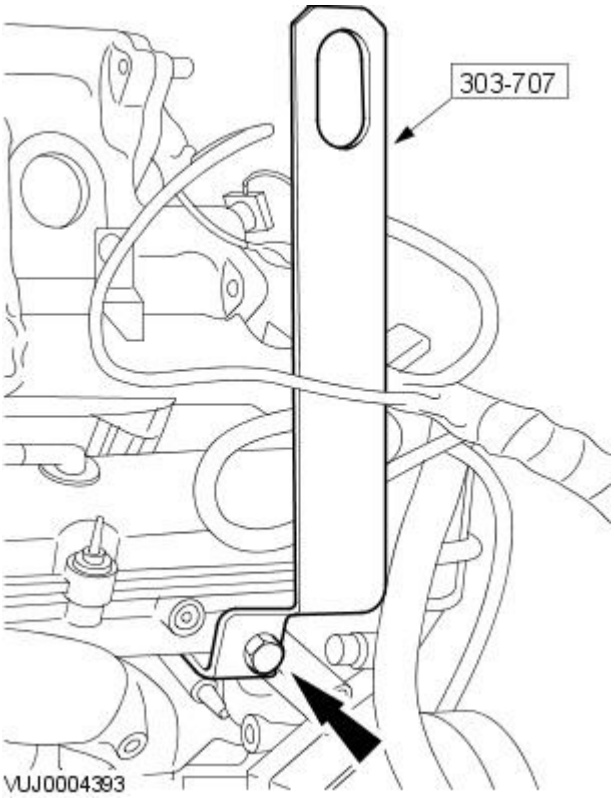

44. Remove the special tool.

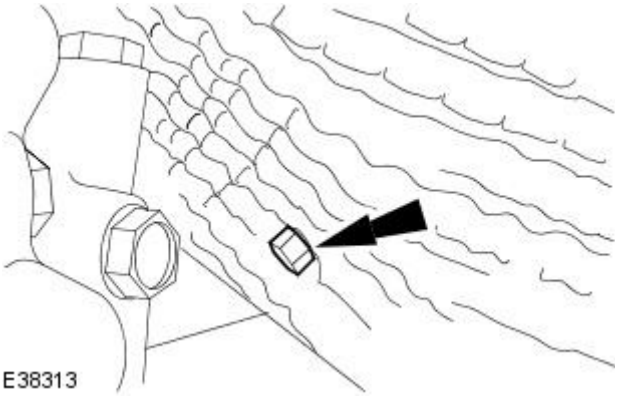

45. Install the center exhaust heat shield.

- Tighten to 10 Nm.

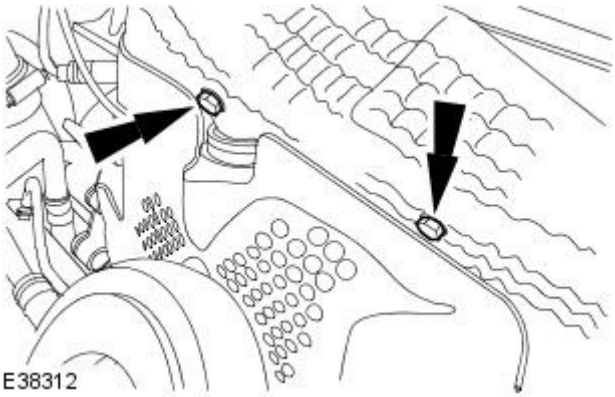

46. Install the center exhaust heat shield retaining bolts.

- Tighten to 10 Nm.

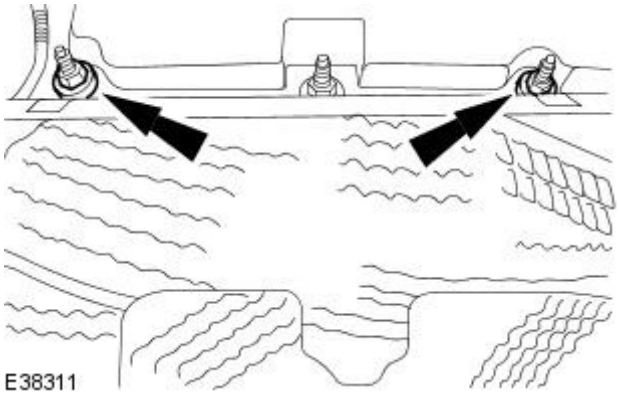

47. Install the upper exhaust heat shield.

- Tighten to 6 Nm.

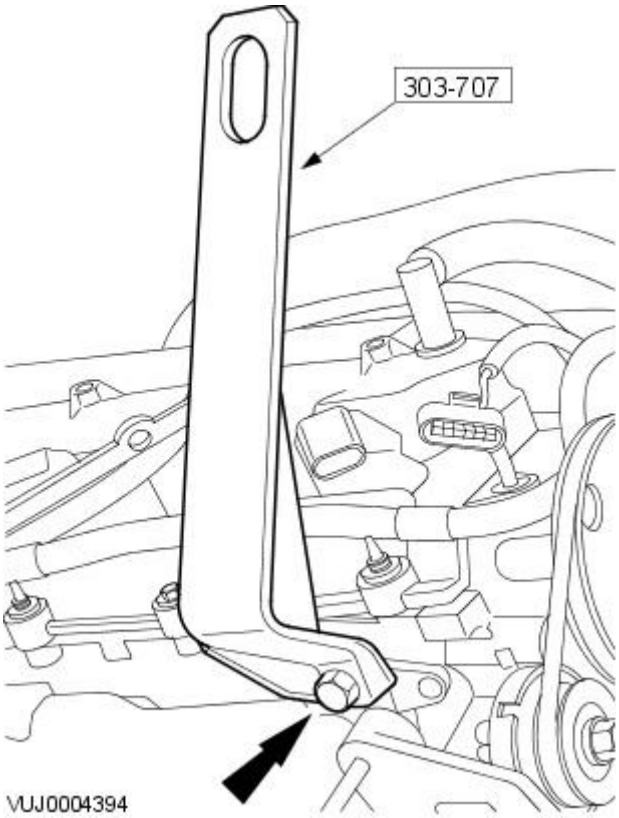

48. Remove the special tool.

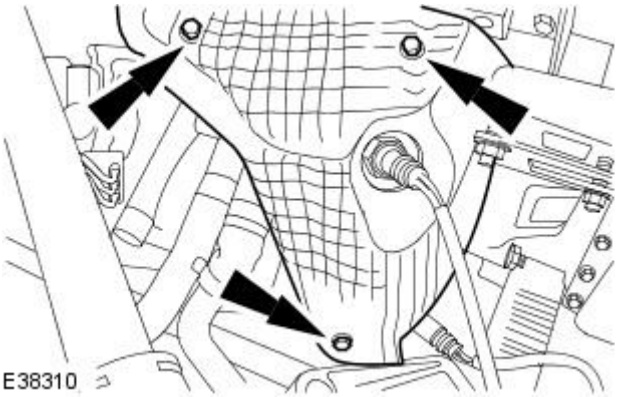

49. Install the left-hand exhaust manifold heat shield.

- Tighten to 10 Nm.

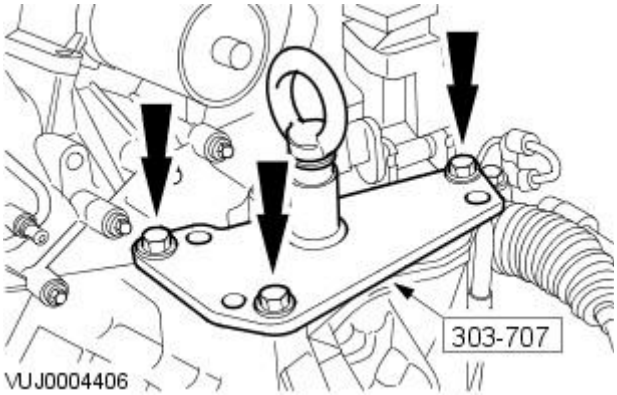

50. Remove the special tool.

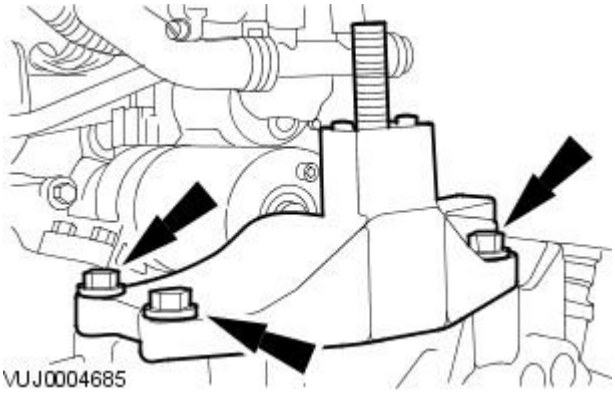

51. Install the transaxle mount.

- Tighten to 80 Nm.

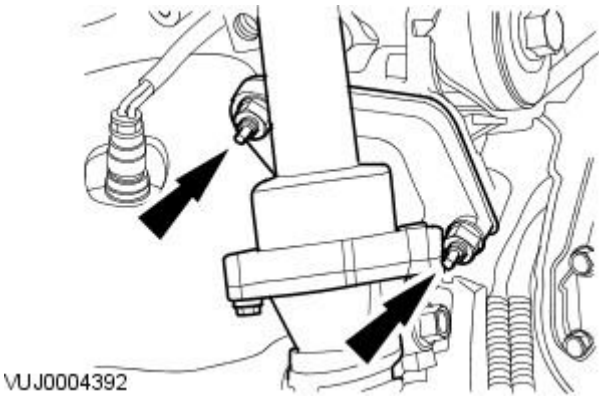

52. Install the coolant system top hose.

- Install a new gasket.
- Tighten to 9 Nm.

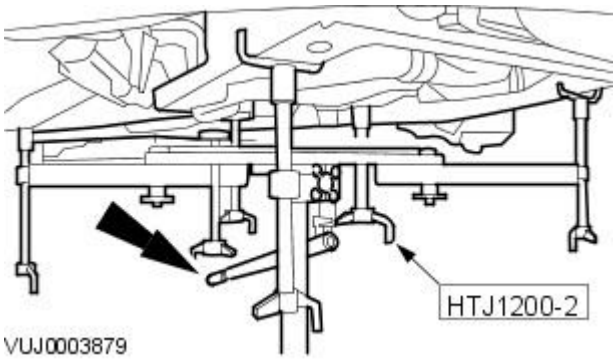

53. WARNING: Raise the special tool platform slowly. Failure to follow this instruction can result in personal injury.

Install the engine and transaxle assembly.

- Raise the special tool platform.

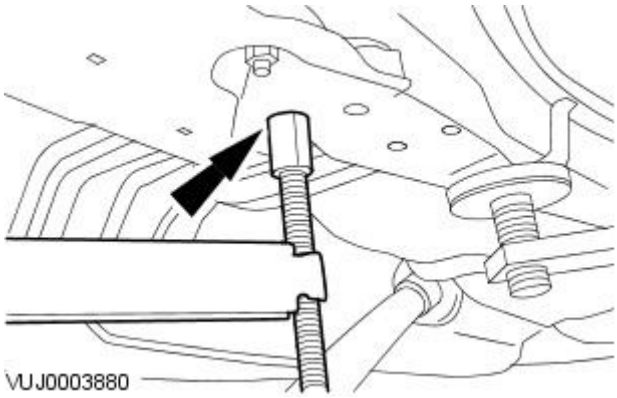

54. NOTE: Left-hand shown, right-hand similar.

Make sure the special tool rear height adjuster aligns into the locating hole in the vehicle floor pan.

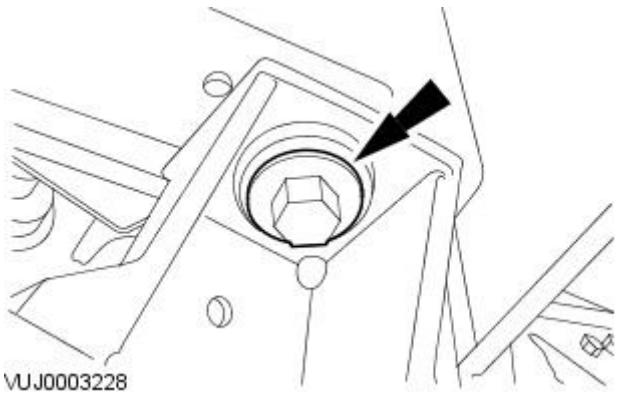

55. NOTE: Left-hand shown, right-hand similar.

Loosely install the front subframe retaining bolt.

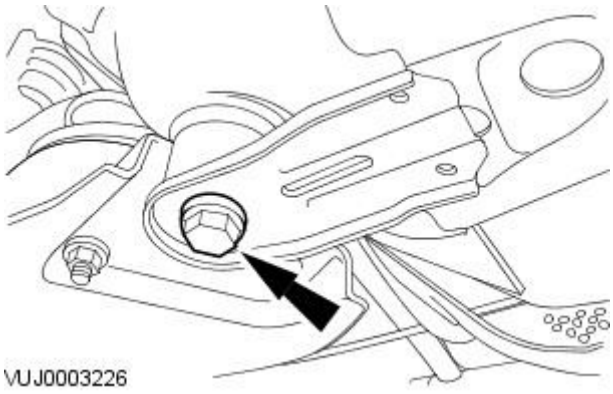

56. NOTE: Left-hand shown, right-hand similar.

Install the front subframe reinforcement plate.

- Loosely install the front subframe rear retaining bolt.

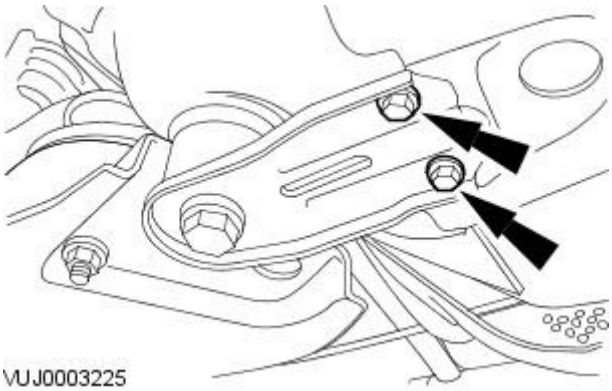

57. NOTE: Left-hand shown, right-hand similar.

Tighten the front subframe reinforcement bolts.

- M8 to 35 Nm.
- M10 to 70 Nm.

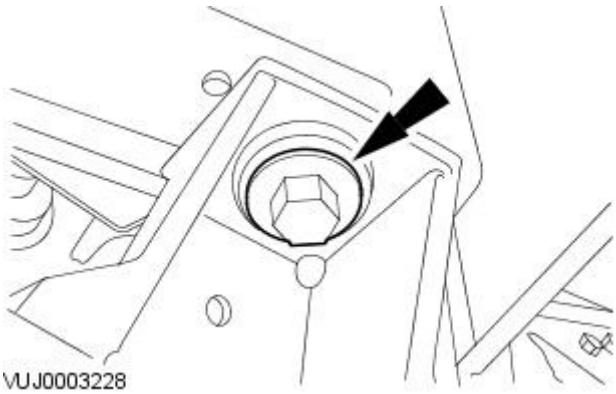

58. NOTE: Left-hand shown, right-hand similar.

Tighten the front subframe retaining bolt.

- Tighten to 142 Nm.

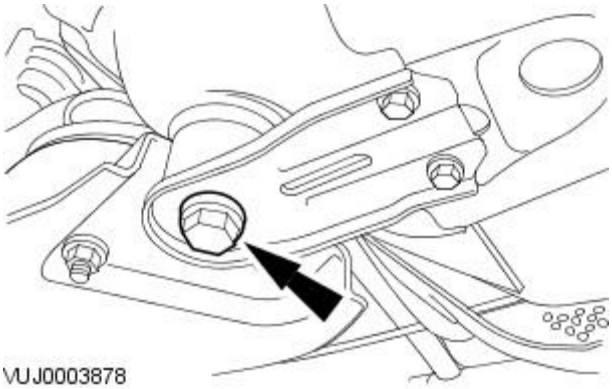

59. NOTE: Left-hand shown, right-hand similar.

Tighten the front subframe rear retaining bolt.

- Tighten to 142 Nm.

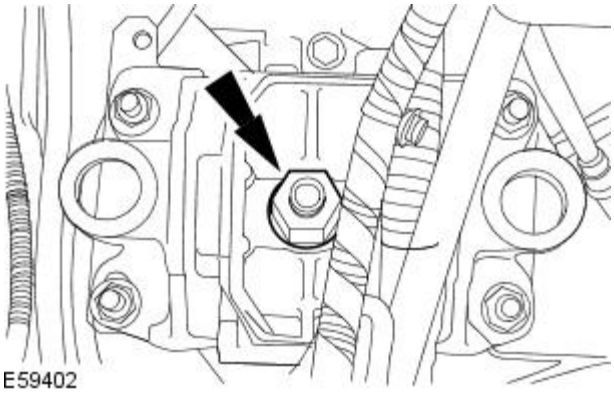

60. Install the transaxle mount bracket securing nut.

- Tighten to 133 Nm.

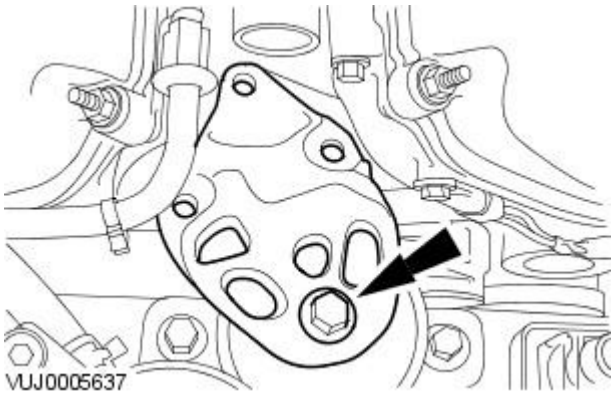

61. Install the engine support bracket.

- Tighten to 80 Nm.

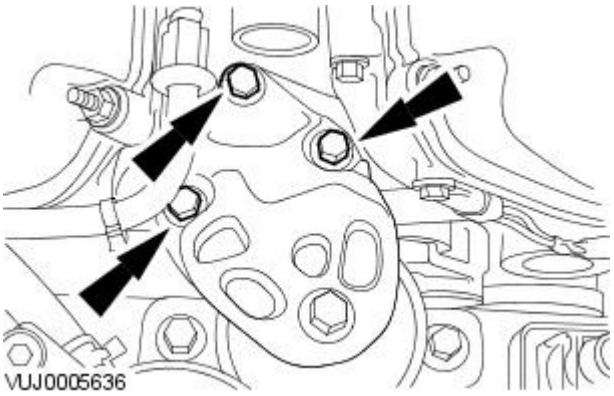

62. Tighten the engine support bracket retaining bolts.

- Tighten to 40 Nm.

• NOTE: If fixings can be re-used on vehicles built prior to VIN J24254, then the old torque must be used (48 Nm). If new fixings are used on any vehicle use the new torque.

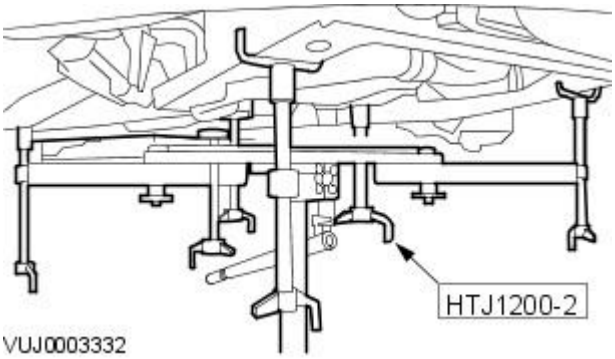

63. Remove the special tool.

64. Lower the vehicle.

65. NOTE: Right-hand shown, left-hand similar.

Attach the strut and spring assembly.

- Tighten to 30 Nm.

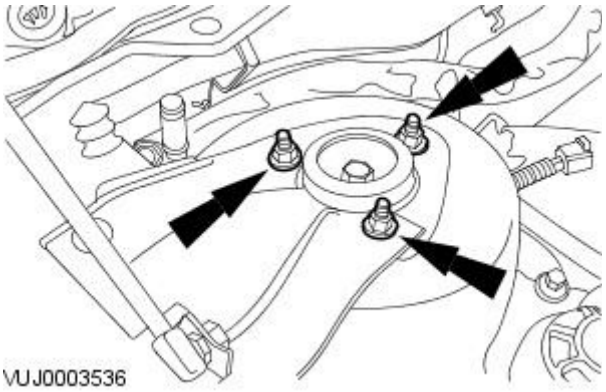

66. Attach the coolant pipe.

- Tighten to 9 Nm.

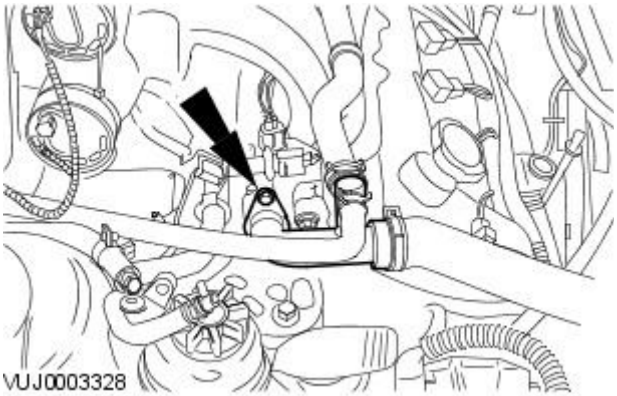

67. Connect the spring lock coupling.
For additional information, refer to: Spring Lock Couplings (310-00 Fuel System - General Information, General Procedures).

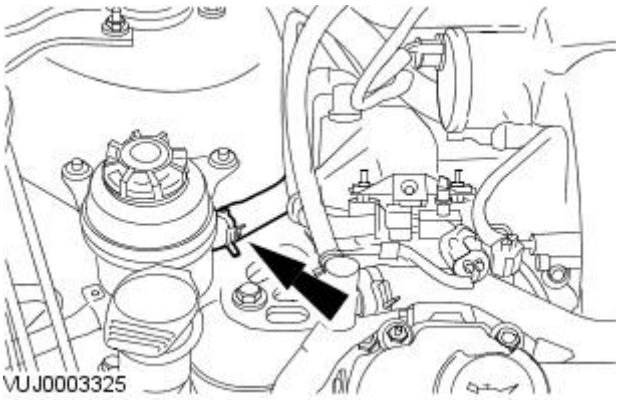

68. NOTE: Remove the blanking plug from the hose.

Attach the power steering hose.

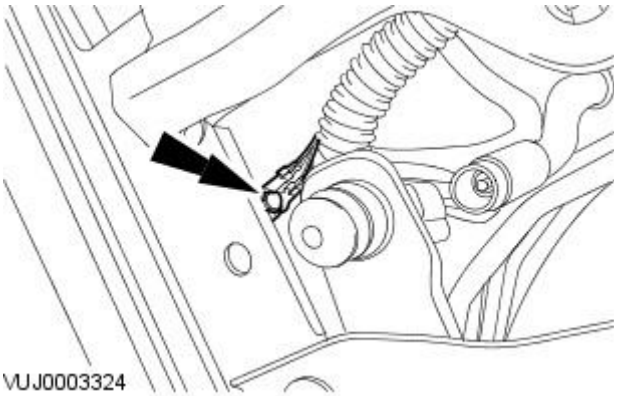

69. Connect the ground cable.

- Tighten to 10 Nm.

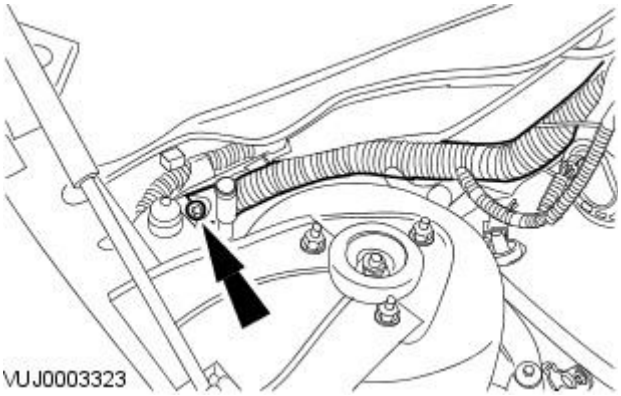

70. Connect the engine control module (ECM) electrical connector.

- Using special tool 418-535, tighten to 5 Nm.

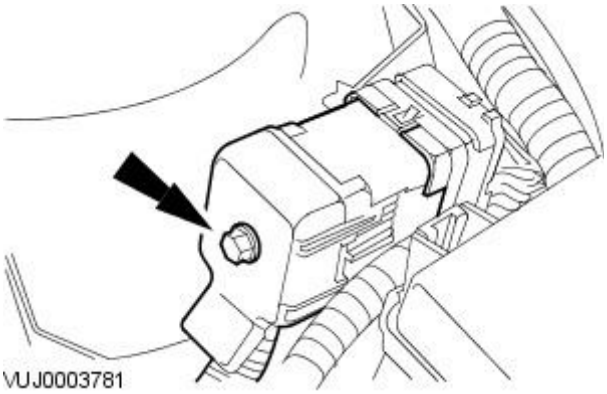

71. Connect the electrical connector.

- Tighten to 10 Nm.

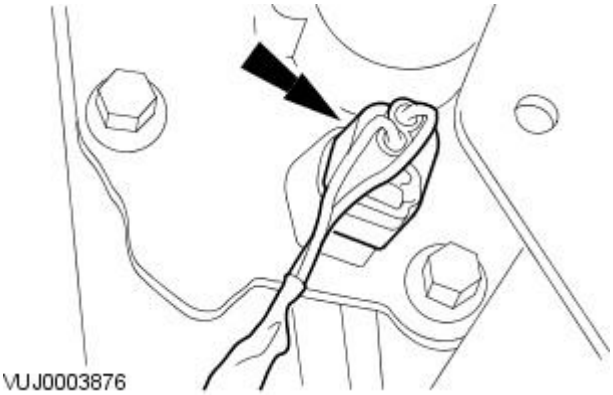

72. Connect the reverse light switch electrical connector.

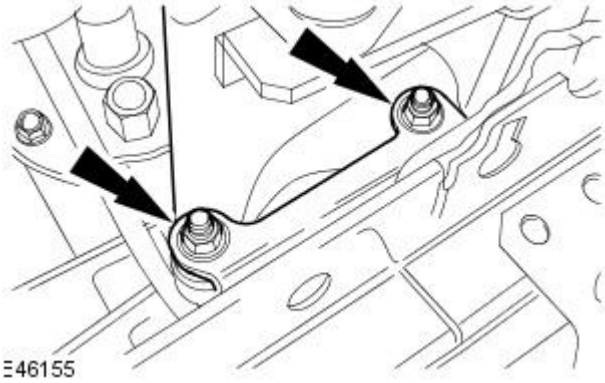

73. Install the clutch master cylinder to clutch slave cylinder high pressure pipe support bracket.

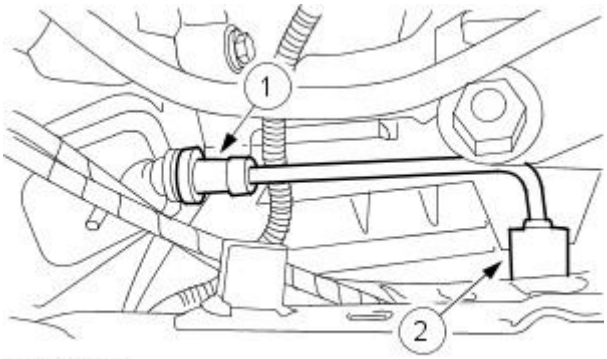

74. CAUTION: If brake fluid is spilt on the paintwork, the affected area must be immediately washed down with cold water.

• NOTE: Remove the tie straps.

• NOTE: Remove the blanking plugs from the pipe and slave cylinder.

Connect the clutch slave cylinder pipe.

1. Attach the clutch slave cylinder pipe to the slave cylinder.
2. Attach the clutch cylinder to the retaining bracket.

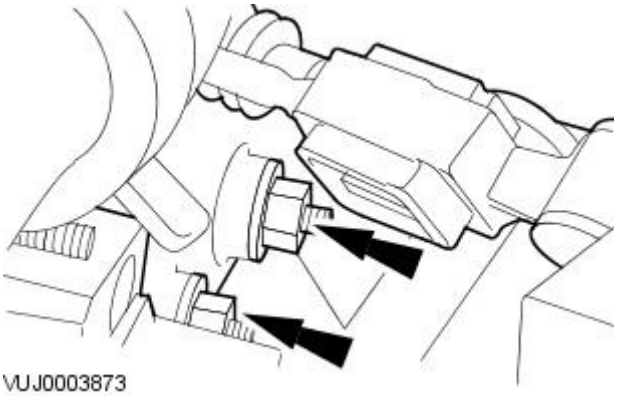

75. NOTE: Remove the tie straps.

Attach the selector cables.

- Tighten to 25 Nm.

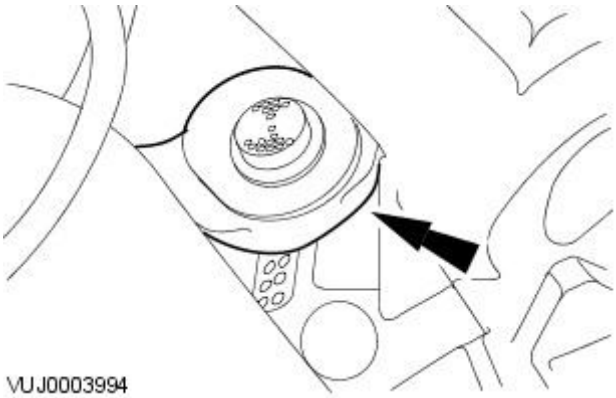

76. NOTE: Upper selector cable shown, lower selector cable similar.

Attach the selector cables.

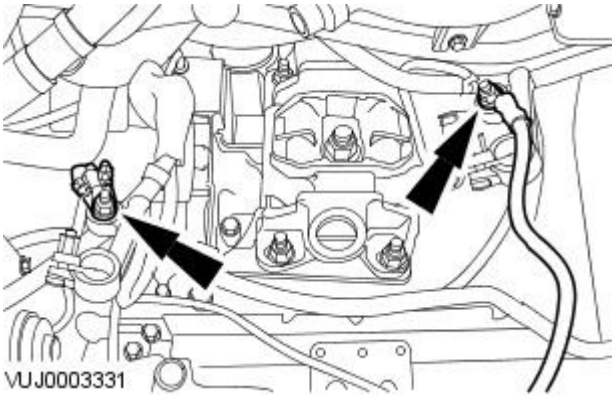

77. Attach the battery cables.

- Tighten to 10 Nm.

Vehicles with 2.0L engine

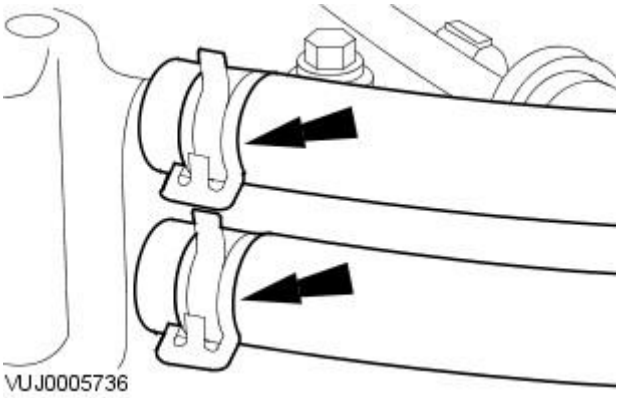

78. Attach the coolant hoses.

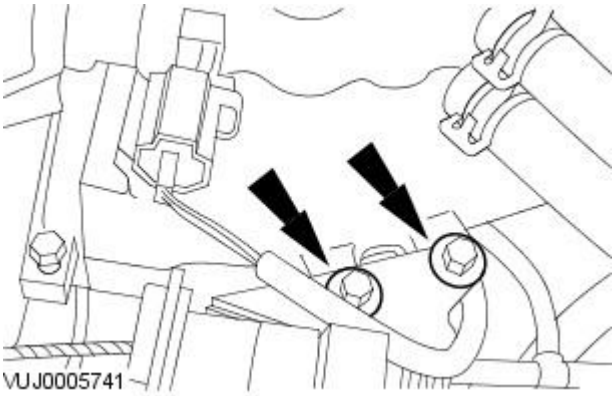

79. Attach the accelerator cable retaining bracket.

- Tighten to 9 Nm.

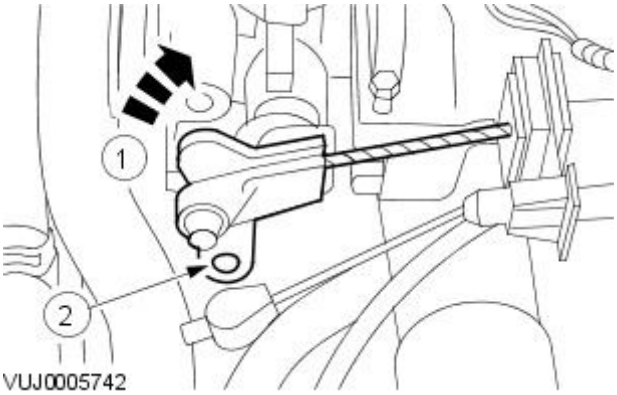

80. Attach the accelerator cable.

1. Reposition the accelerator lever to the fully open position.
2. Attach the accelerator cable.

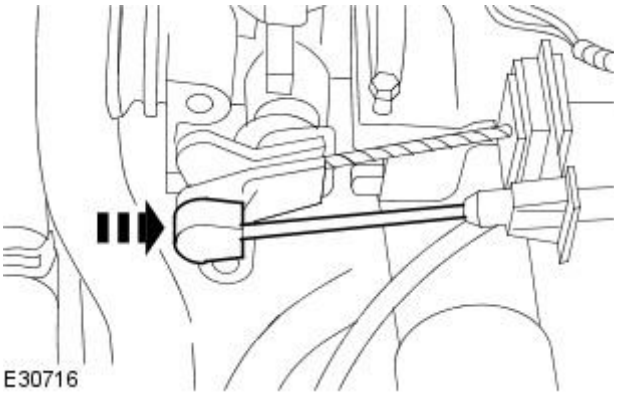

81. Attach the cruise control cable.

All vehicles

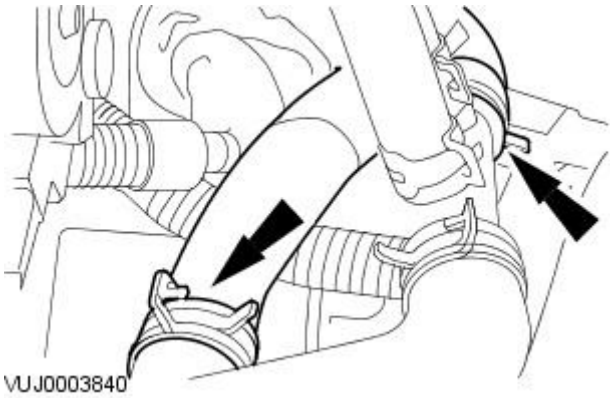

82. Attach the coolant hoses.

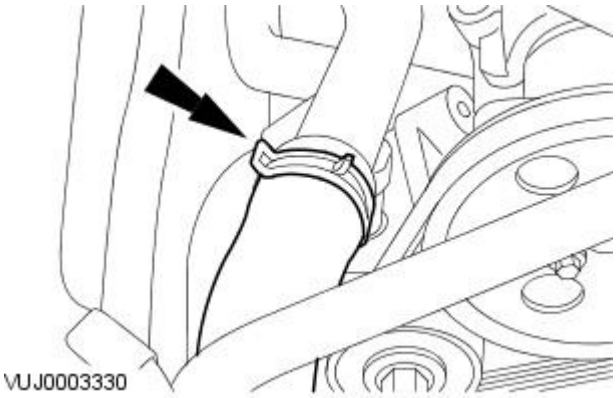

83. Attach the coolant hose.

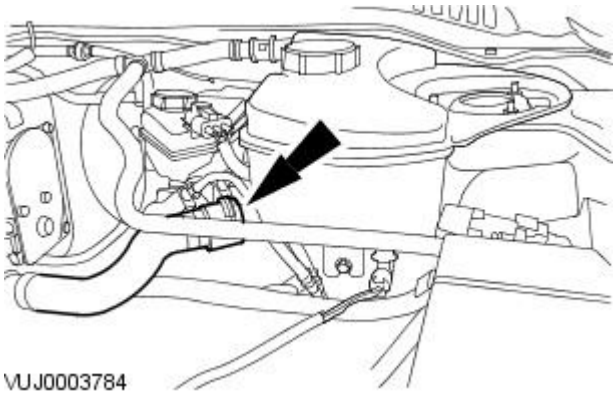

84. Attach the coolant hose.

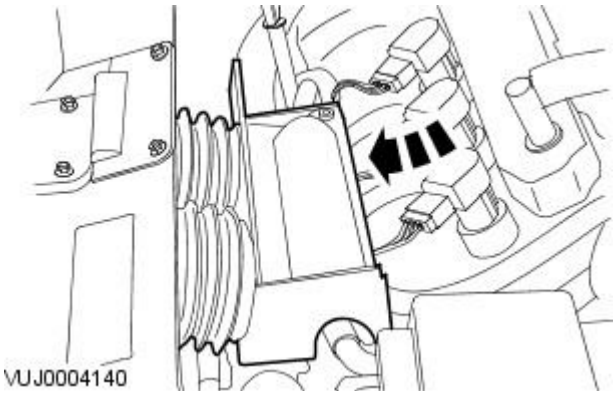

85. Install the air filter intake pipe.

86. Install the air cleaner.
For additional information, refer to: Air Cleaner (303-12A Intake Air Distribution and Filtering - 2.0L NA V6 - AJV6/2.5L NA V6 - AJV6/3.0L NA V6 - AJ27, Removal and Installation).

87. Raise the vehicle.

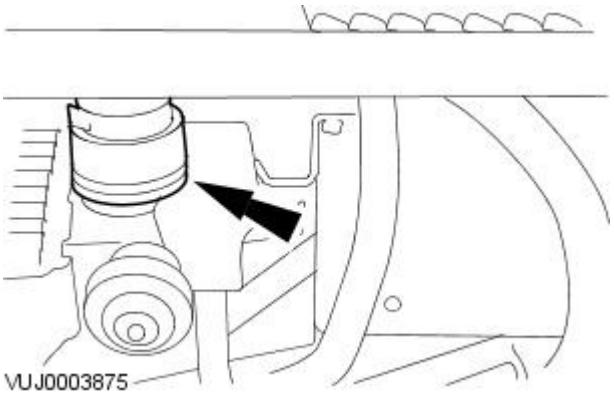

88. Attach the coolant hose.

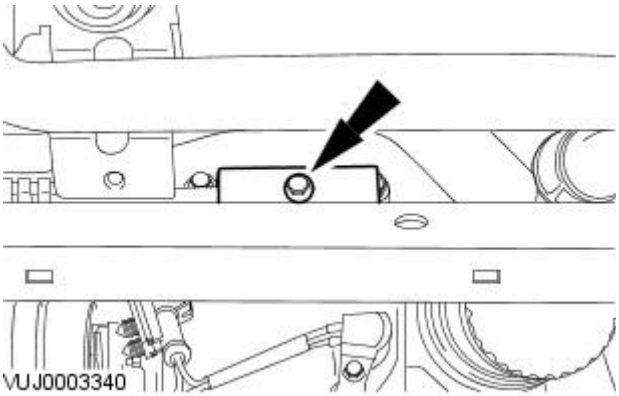

89. NOTE: Remove the tie straps.

• NOTE: Remove the blanking plugs from the tube and the A/C compressor.

Attach the A/C compressor supply and return tubes.

- Install new O-ring seals.
- Tighten to 25 Nm.

90. Install the front muffler.
For additional information, refer to: Front Muffler - 2.0L NA V6 - AJV6/2.5L NA V6 - AJV6/3.0L NA V6 - AJ27 (309-00 Exhaust System, Removal and Installation).

Vehicles with 2.5L or 3.0L engine

91. Install the driveshaft.
For additional information, refer to: Driveshaft (205-01 Driveshaft, Removal and Installation).

All vehicles

92. Install the cooling fan motor and shroud.
For additional information, refer to: Cooling Fan Motor and Shroud (303-03A Engine Cooling - 2.0L NA V6 - AJV6/2.5L NA V6 - AJV6/3.0L NA V6 - AJ27, Removal and Installation).

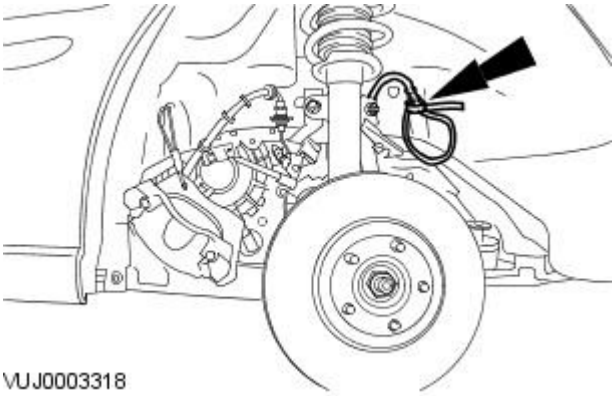

93. NOTE: Remove the tie straps.

• NOTE: Left-hand shown, right-hand similar.

Detach and reposition the anti-lock brake system (ABS) wheel speed sensor.

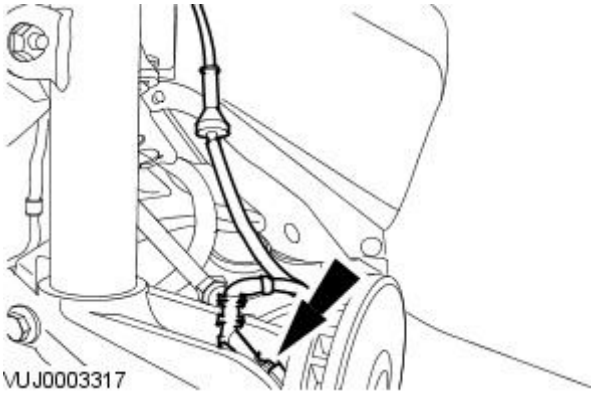

94. NOTE: Left-hand shown, right-hand similar.

Connect the ABS wheel speed sensor.

- Tighten to 5 Nm.

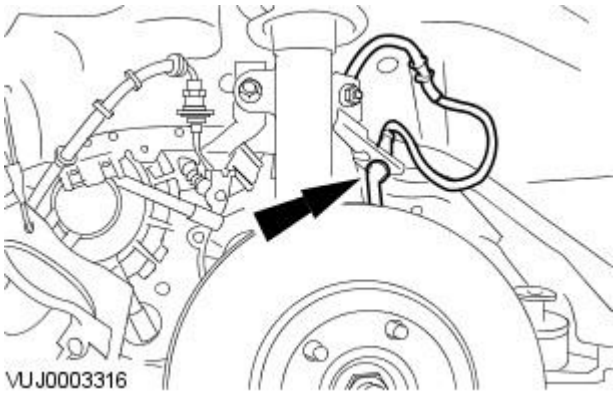

95. NOTE: Left-hand shown, right-hand similar.

Attach the ABS wheel speed sensor.

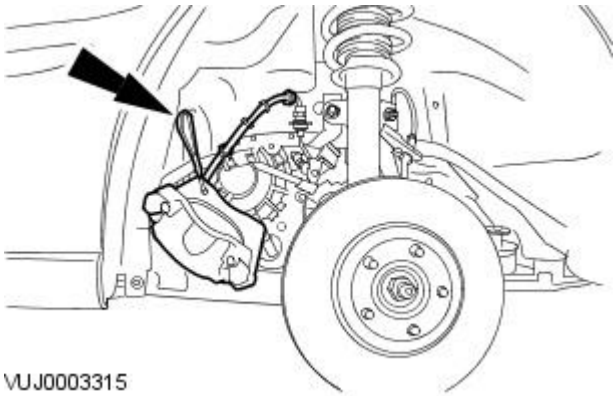

96. NOTE: Remove the tie straps.

• NOTE: Left-hand shown, right-hand similar.

Detach and reposition the brake caliper assembly.

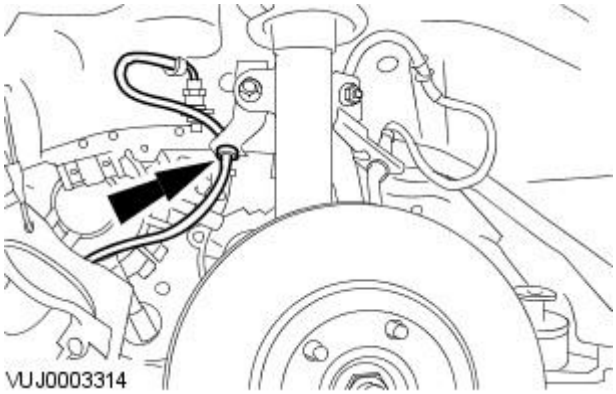

97. NOTE: Left-hand shown, right-hand similar.

Attach the brake pipe.

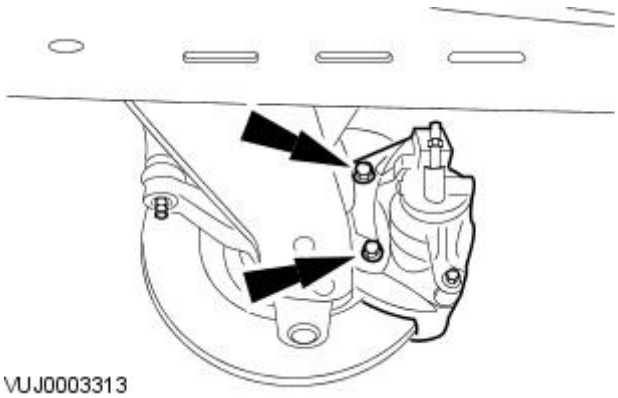

98. NOTE: Left-hand shown, right-hand similar.

• NOTE: Install new brake caliper anchor plate retaining bolts.

Attach the brake caliper assembly.

- Tighten to 133 Nm.

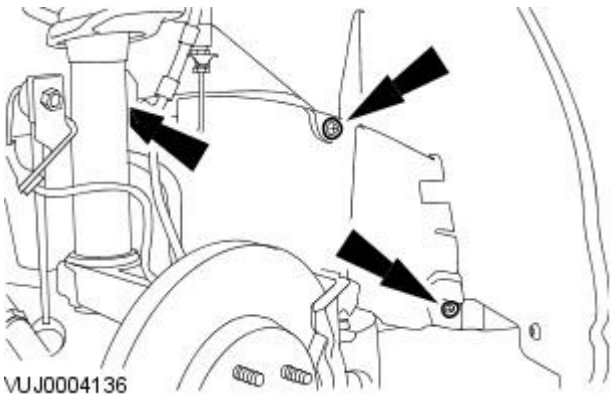

99. NOTE: Right-hand shown, left-hand similar.

Install the splash shield.

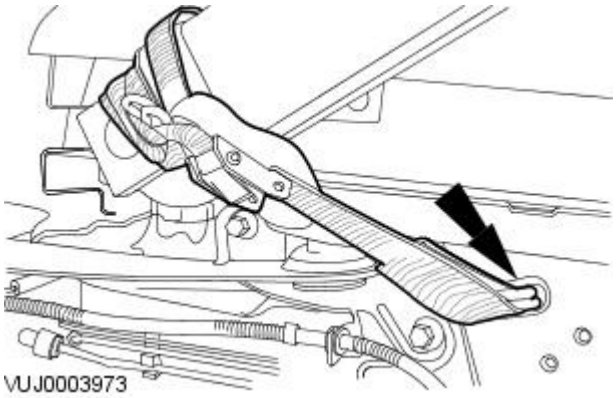

100. NOTE: Right-hand shown, left-hand similar.

Remove the rear vehicle tie down strap.

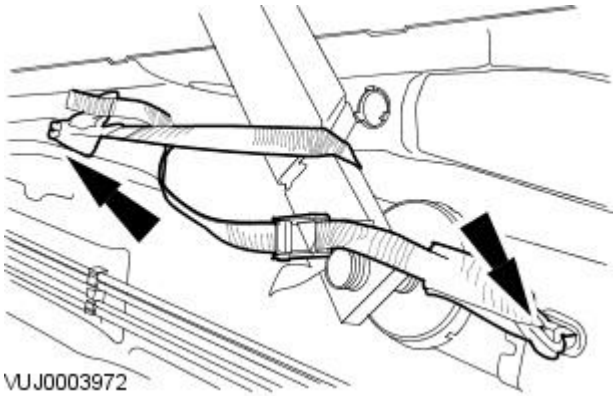

101. NOTE: Right-hand shown, left-hand similar.

Remove the front vehicle tie down strap.

102. Install the front wheels and tires.
For additional information, refer to: Wheel and Tire (204-04 Wheels and Tires, Removal and Installation).

103. Install the battery tray.
For additional information, refer to: Battery Tray (414-01 Battery, Mounting and Cables, Removal and Installation).

104. Fill and bleed the cooling system.
For additional information, refer to: Cooling System Draining, Filling and Bleeding (303-03A Engine Cooling - 2.0L NA V6 - AJV6/2.5L NA V6 - AJV6/3.0L NA V6 - AJ27, General Procedures).

105. Bleed the power steering system.
For additional information, refer to: Power Steering System Filling (211-00 Steering System - General Information, General Procedures).

106. Recharge the A/C refrigerant.
For additional information, refer to: Air Conditioning (A/C) System Recovery, Evacuation and Charging (412-00 Climate Control System - General Information, General Procedures).

107. Install the steering column lower retaining bolt.

- Tighten to 25 Nm.

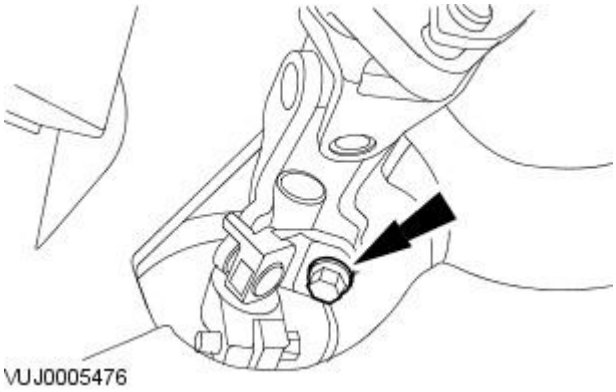

108. Fill the transaxle.
For additional information, refer to: Transaxle Draining and Filling - Vehicles With: 6-Speed Manual Transaxle - MMT6 (308-03 Manual Transmission/Transaxle, General Procedures).

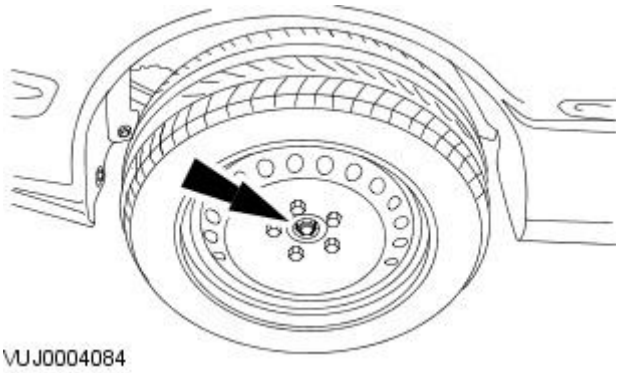

109. NOTE: Left-hand shown, right-hand similar.

Tighten the front hub retaining nuts.

- Tighten to 290 Nm.

110. Carry out the underbody misalignment check.
For additional information, refer to: Underbody Misalignment Check (502-00 Uni-Body, Subframe and Mounting System, General Procedures).

111. Check the engine oil level and correct as necessary.

112. NOTE: When the battery has been disconnected and reconnected, some abnormal drive symptoms may occur while the vehicle relearns its adaptive strategy.

Finishing operations.

- Check the routing of the vacuum hoses and wiring and secure them with cable ties.
- Check the fluid levels after the road test and correct as necessary.
- Check the engine and cooling system for leaks (visual inspection).

Engine - 2.0L NA V6 - AJV6 / 2.5L NA V6 - AJV6 / 3.0L NA V6 - AJ27 - EngineVehicles With: 5-Speed Automatic Transaxle - JATCO / 6-Speed Automatic Transaxle - AWF21

Installation

Special Tool(s)	
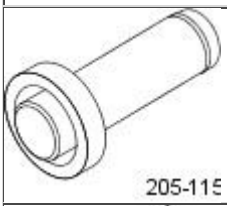 205-115	Halfshaft oil seal installer 205-115
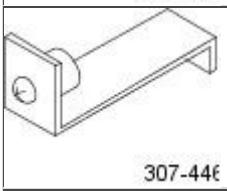 307-446	Link shaft limiting tool 307-446
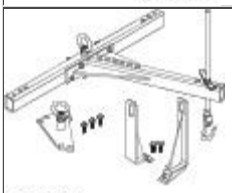 303707	Engine lifting kit 303-707
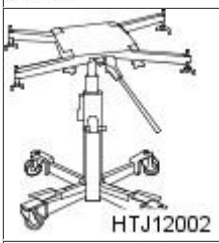 HTJ12002	Powertrain Assembly Jack HTJ12000-2
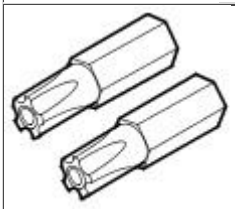 418-535	5 Point Security Torx Bit 418-535

Installation

All vehicles

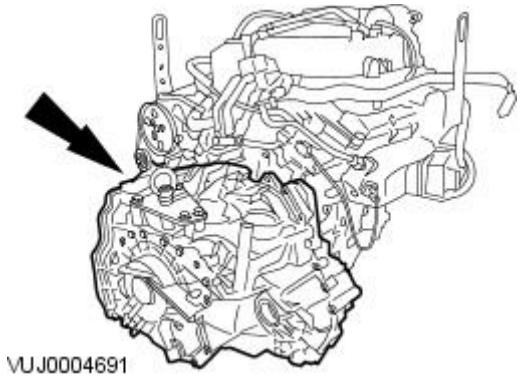
VUJ0004691

1. NOTE: Use high temperature grease ESD-M1C220-A or equivalent meeting the Jaguar specification.

Apply a thin layer of grease to the centering spigot bore on the torque converter.

2. CAUTION: The torque converter must remain at the correct installation depth throughout the whole installation procedure.

• NOTE: The torque converter must engage fully in the oil pump drive gear.

Check the installation depth between the transmission flange and the torque converter is at least 0.04 mm (0.015 in).

3. WARNING: Do not let the torque converter drop out of the transaxle. Failure to follow this instruction may result in personal injury.

Install the transaxle.

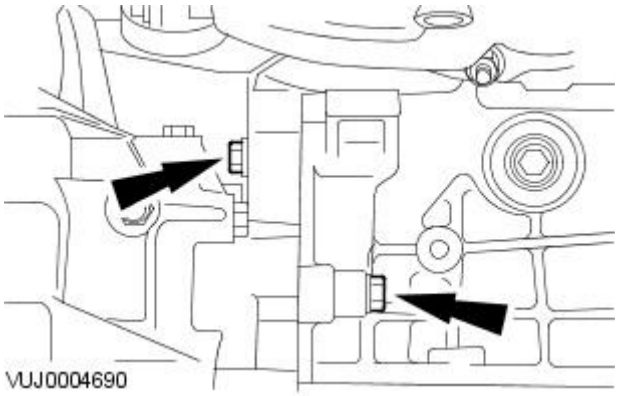

4. Install the transaxle retaining bolts.

- Tighten to 48 Nm.

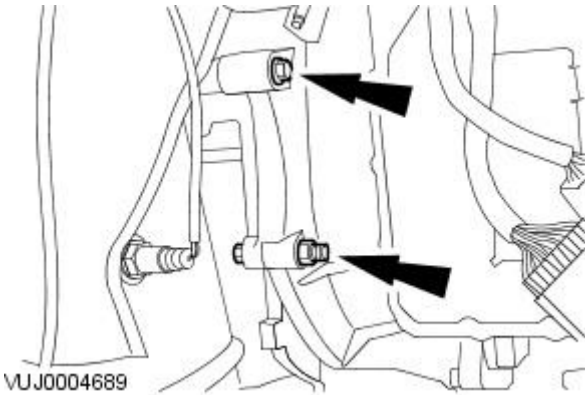

5. Install the transaxle retaining bolts.

- Tighten to 48 Nm.

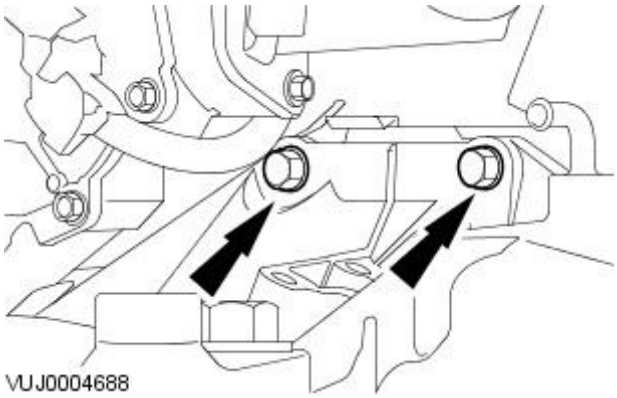

6. Install the transaxle retaining bolts.

- Tighten to 48 Nm.

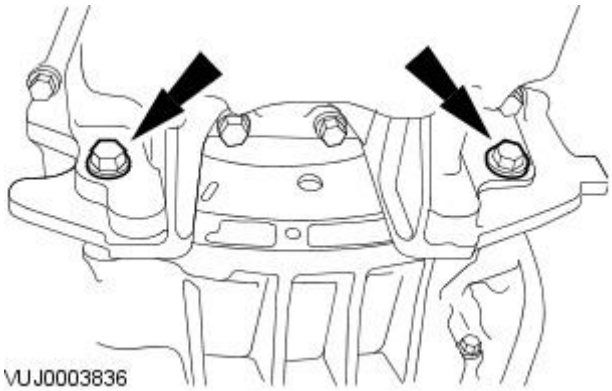

7. Install the transaxle retaining bolts.

- Tighten to 48 Nm.

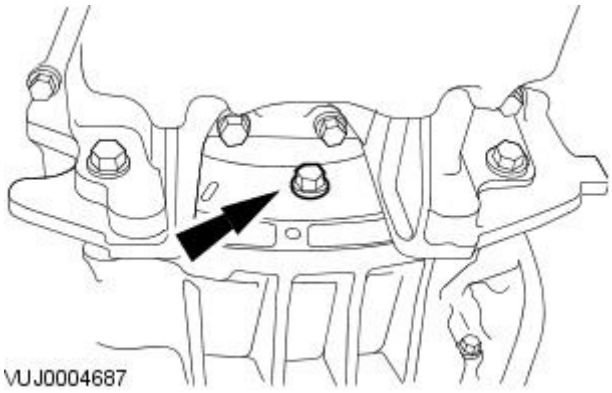

8. NOTE: Rotate the torque converter to gain access to the remaining retaining bolts.

Install the torque converter retaining bolts.

- Tighten to 55 Nm.

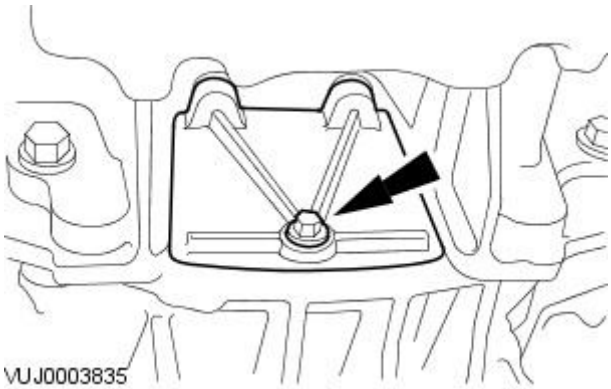

9. Install the access cover.

- Tighten to 10 Nm.

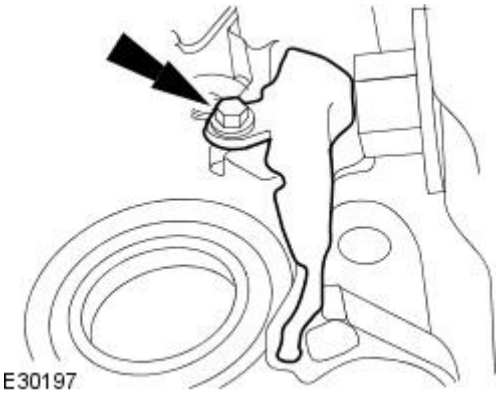

10. Install the dust cover.

- Tighten to 10 Nm.

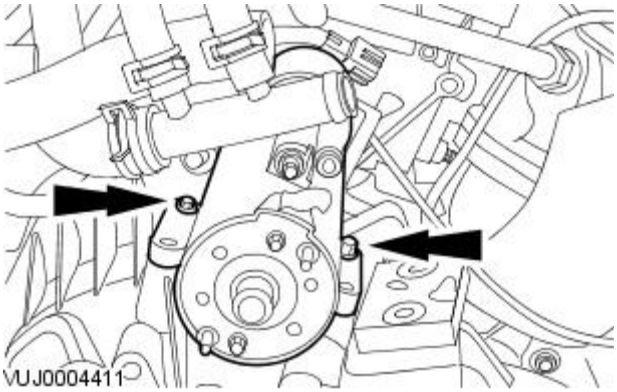

11. Install the starter motor.

- Tighten to 35 Nm.

Vehicles with 2.5L or 3.0L engine

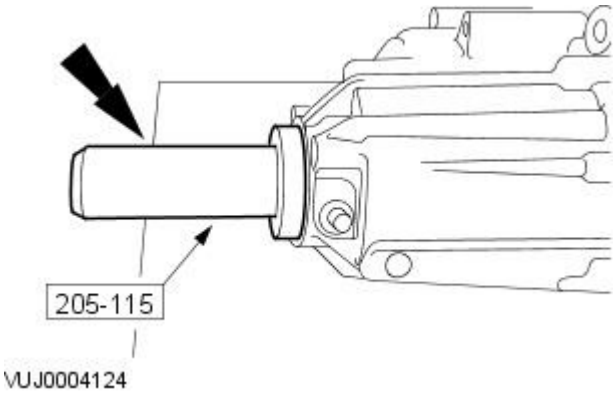

12. NOTE: Using a suitable surface cleaner, WSE-M5B392-A or equivalent, meeting the Jaguar specification. Clean the seal face on the transfer case before installing the new link shaft oil seal.

Using the special tool, install a new link shaft oil seal.

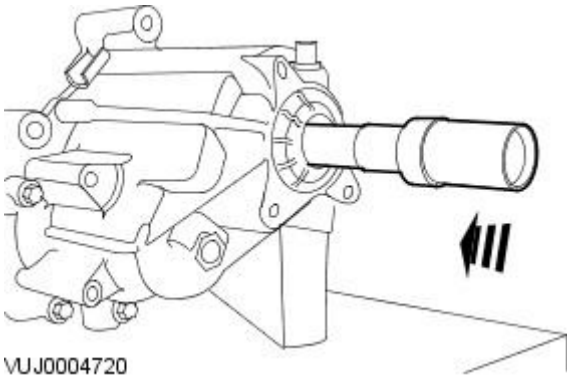

13. Install the link shaft.

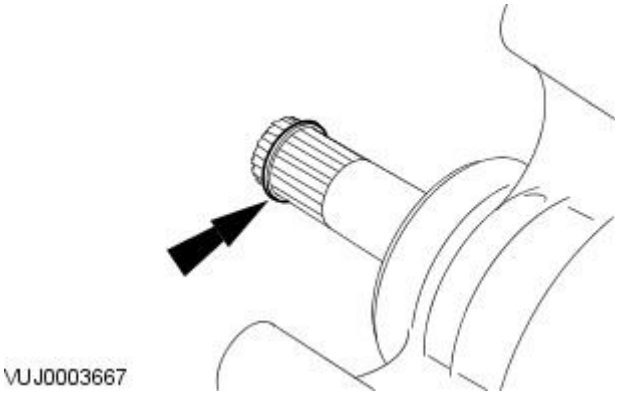

14. Install a new link shaft snap ring.

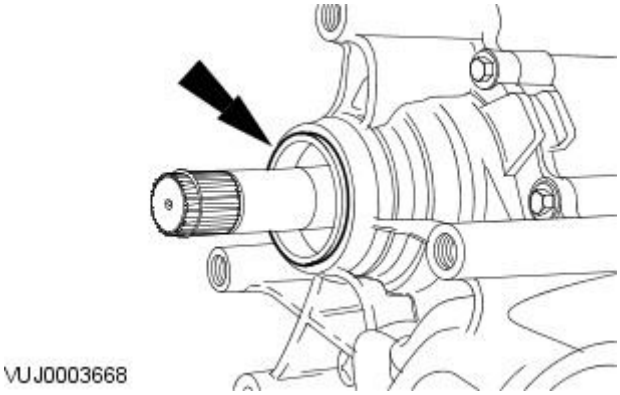

15. Install a new transfer case O-ring seal.

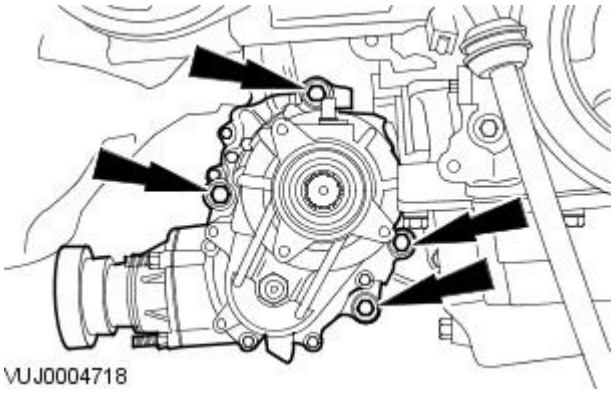

16. NOTE: Engage the link shaft into the transaxle.

Install the transfer case.

- Tighten to 90 Nm.

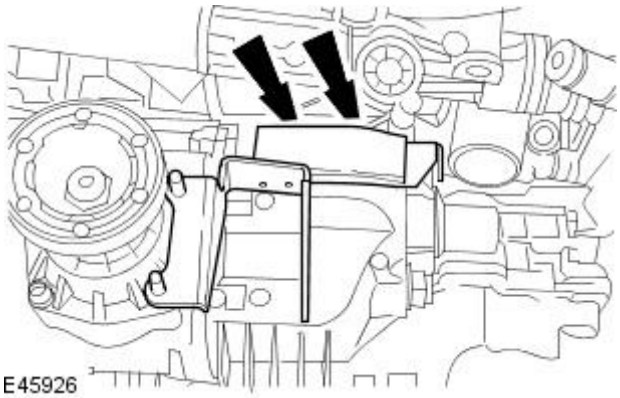

17. NOTE: Do not tighten the engine roll restrictor bracket top retaining bolts at this stage at this stage.

Install the engine roll restrictor bracket.

- Install the engine roll restrictor bracket top retaining bolts.

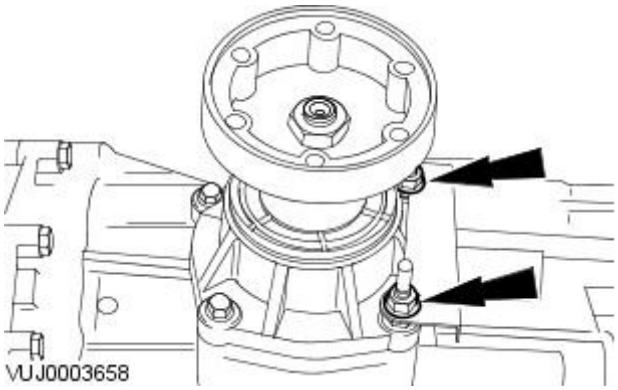

18. NOTE: Do not tighten the engine roll restrictor bracket retaining nuts at this stage.

Install the engine roll restrictor bracket.

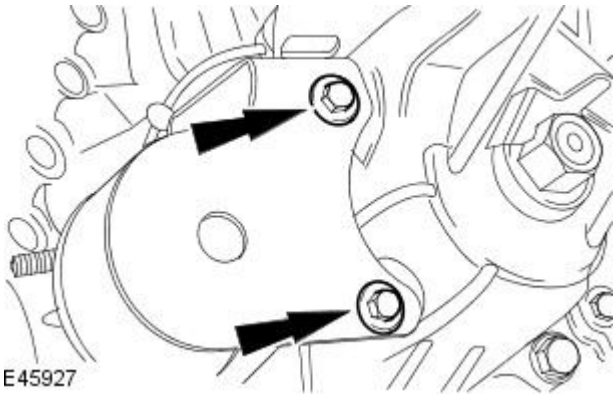

19. Install the engine roll restrictor bracket side retaining bolts.

- Tighten to 35 Nm.

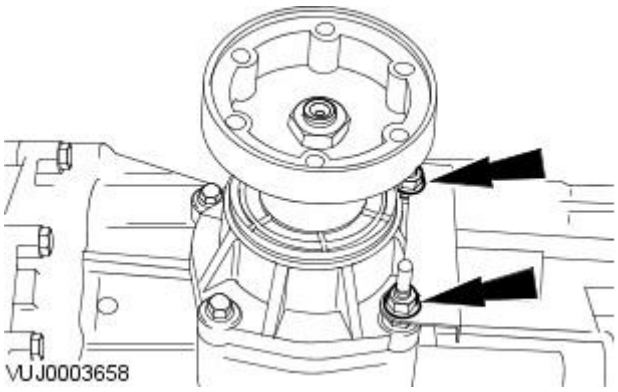

20. Tighten the engine roll restrictor bracket retaining nuts.

- Tighten to 35 Nm.

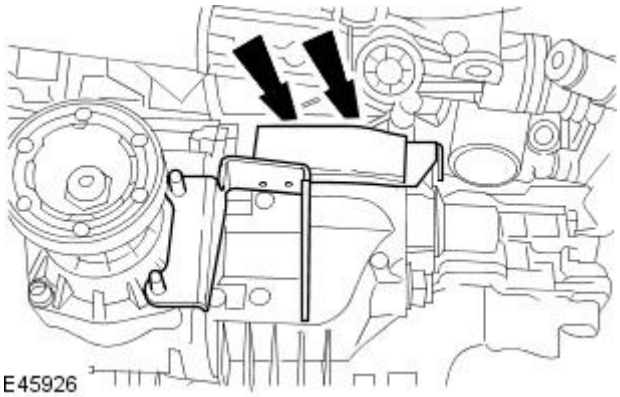

21. Tighten the engine roll restrictor bracket top retaining bolts.

- Tighten to 55 Nm.

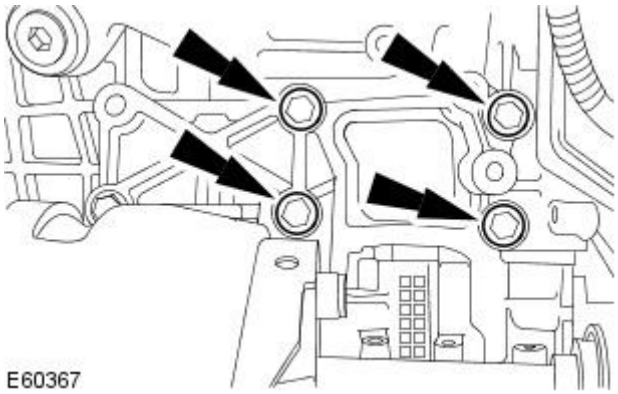

22. NOTE: Do not tighten the catalytic converter retaining bolts at this stage.

Install the catalytic converter mount bracket.

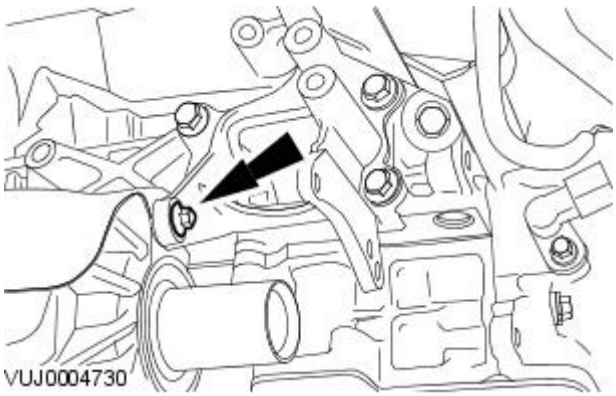

23. Install the catalytic converter mount bracket retaining bolt.

- Tighten to 25 Nm.

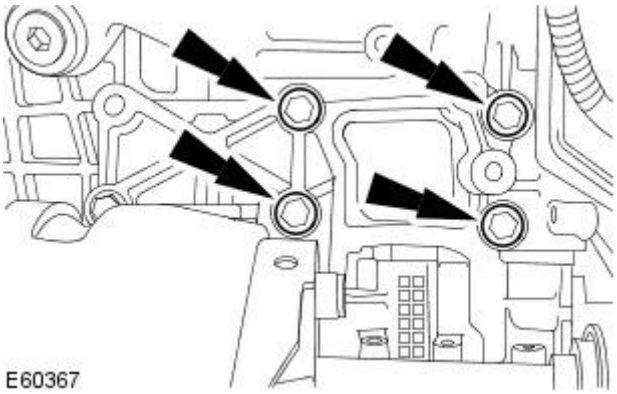

24. Tighten the catalytic converter mount bracket retaining bolts.

- Tighten to 55 Nm.

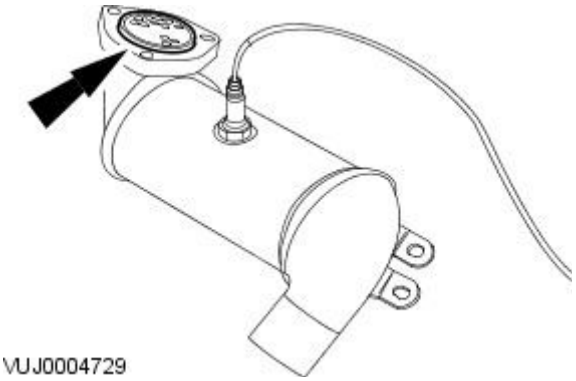

25. Install a new catalytic converter sealing ring.

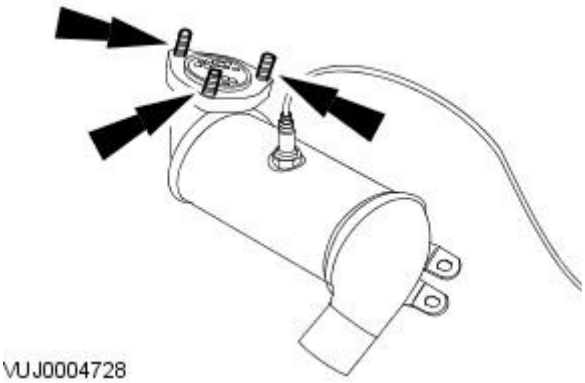

26. Install new catalytic converter retaining studs.

- Tighten to 9 Nm.

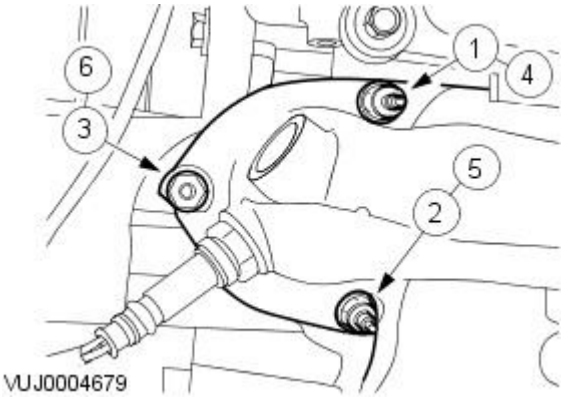

27. CAUTION: Never use jointing compound forward of the catalytic converter. Failure to follow this instruction may result in damage to the component.

• NOTE: Make sure the retaining nuts are tightened twice in the sequence shown.

Install the right-hand catalytic converter.

- Install new retaining nuts.
- Tighten in the sequence shown to 25 Nm.

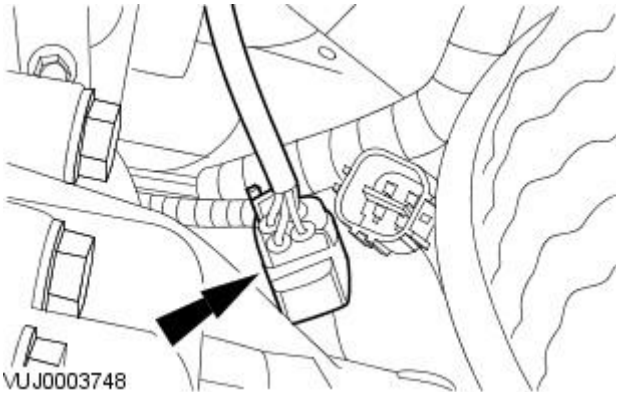

28. Connect the right-hand heated oxygen sensor (HO2S) electrical connector.

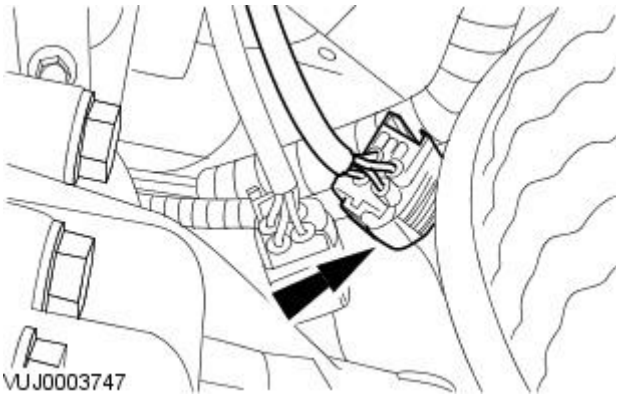

29. Connect the right-hand catalyst monitor sensor electrical connector.

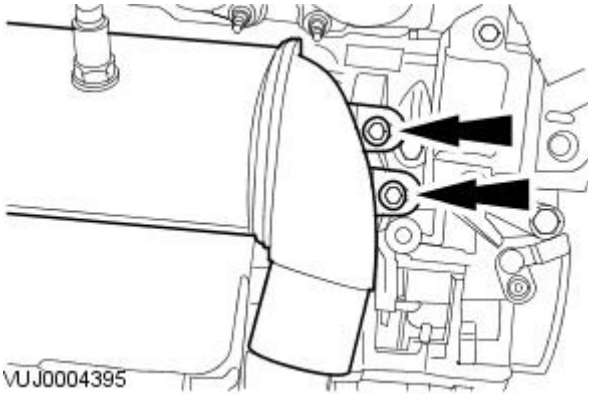

30. Install the right-hand catalytic converter retaining bolts.

- Tighten to 25 Nm.

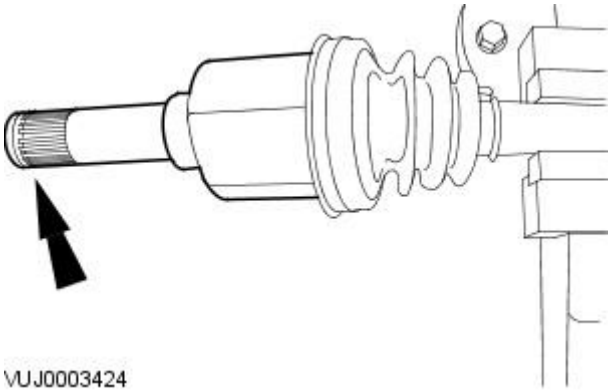

31. Install a new halfshaft snap ring.

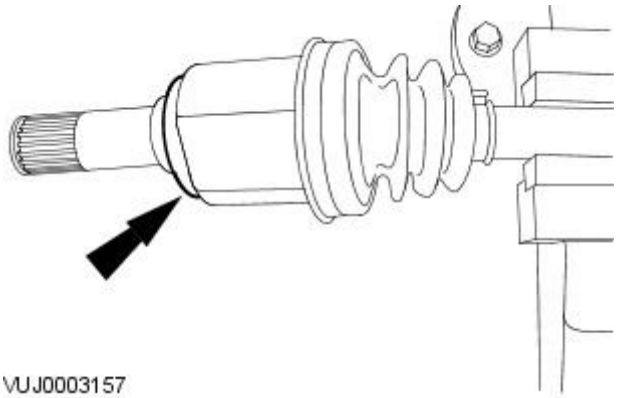

32. Install a new halfshaft seal.

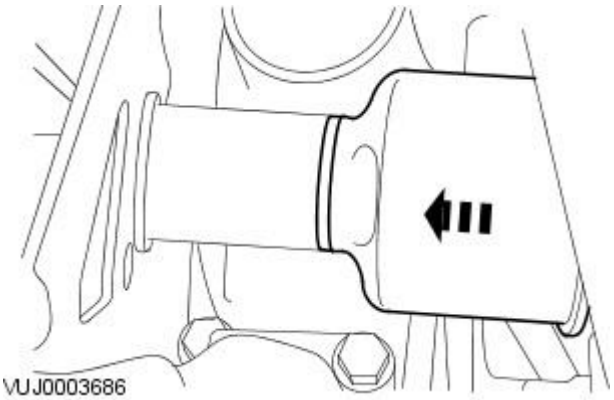

33. CAUTION: Do not use excessive force when engaging the halfshaft to the link shaft. Failure to follow this instruction may result in damage to the component.

• NOTE: Make sure the halfshaft is fully located to the link shaft.

Install the halfshaft.

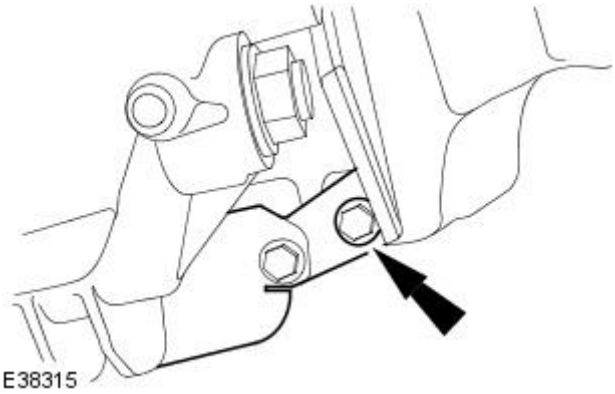

34. Install the transfer case Y bracket.

- Tighten to 55 Nm.

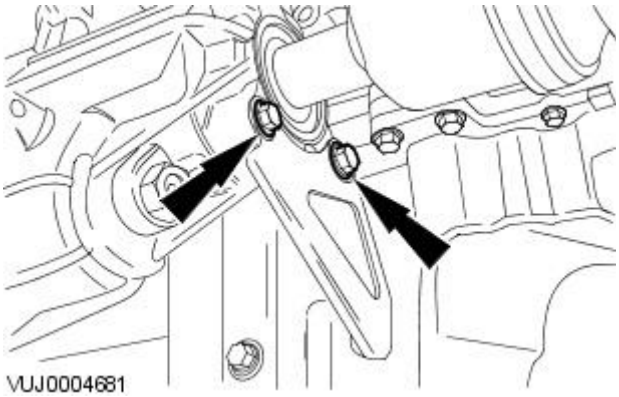

35. Install the transfer case Y bracket retaining bolts.

- Tighten to 25 Nm.

Vehicles with 2.0L engine

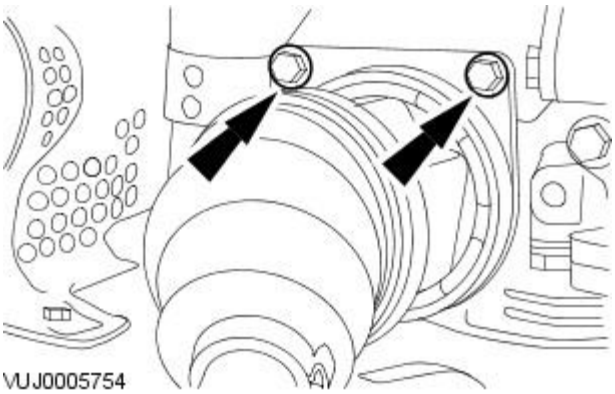

36. Install the halfshaft and intermediate shaft assembly.

- Tighten to 20 Nm.

All vehicles

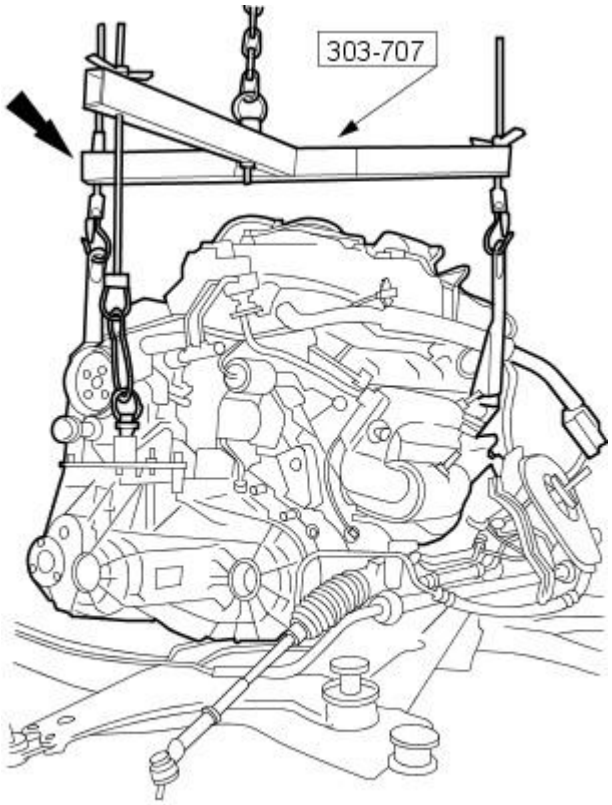

VUJ0004404

37. CAUTION: Make sure the right-hand drive halfshaft is supported, failure to follow this instruction may result in damage to the component.

Using the special tool, install the engine and transaxle to the subframe.

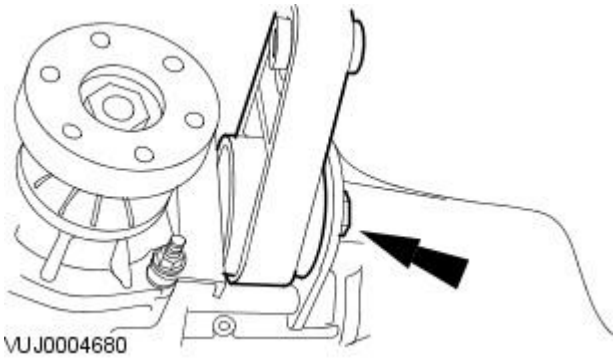

VUJ0004680

38. Install the engine roll restrictor.

- Tighten to 80 Nm.

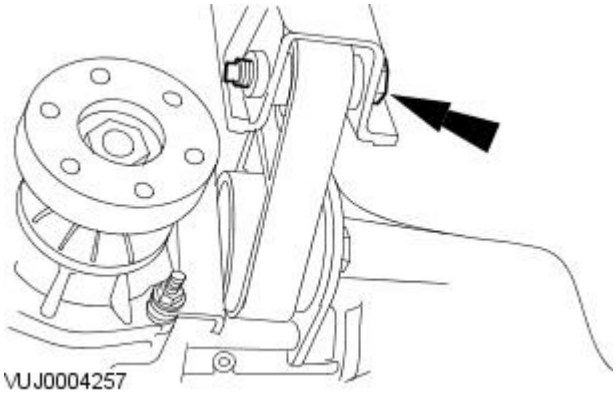

VUJ0004257

39. Install the engine roll restrictor retaining bolt.

- Tighten to 80 Nm.

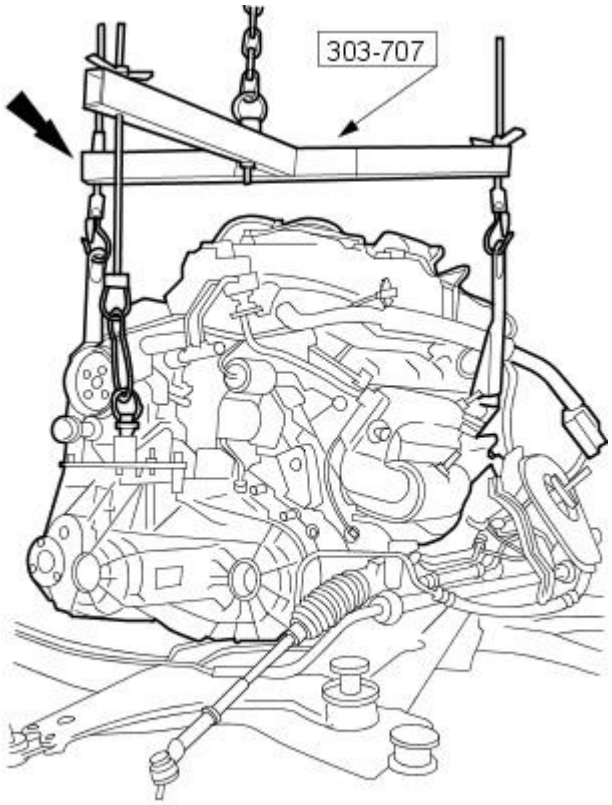

VUJ0004404

40. Remove the special tool.

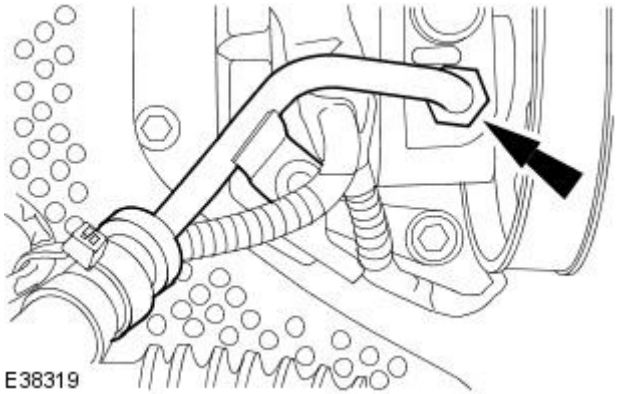

E38319

41. Connect the power steering high-pressure pipe.

- Install a new O-ring seal.
- Tighten to 30 Nm.

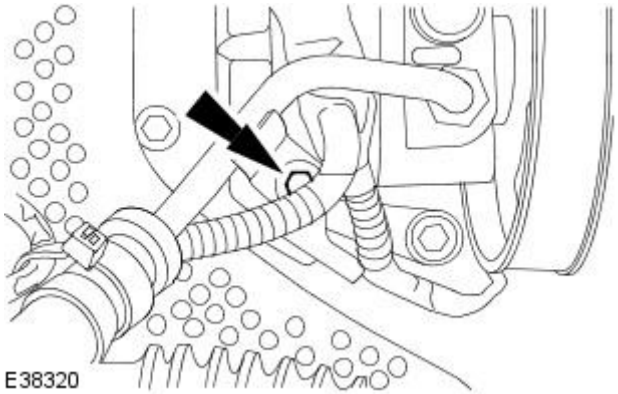

E38320

42. Install the power steering high-pressure pipe retaining bolt.

- Tighten to 25 Nm.

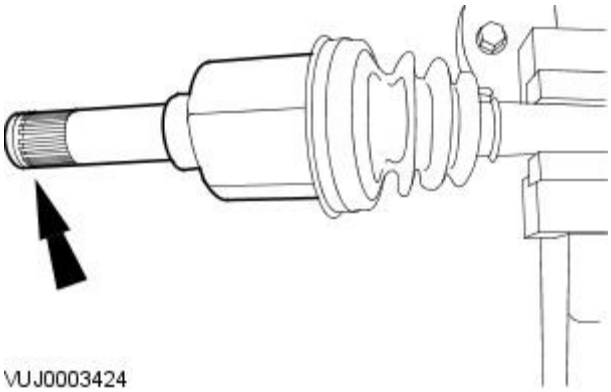

VUJ0003424

43. Install a new halfshaft snap ring.

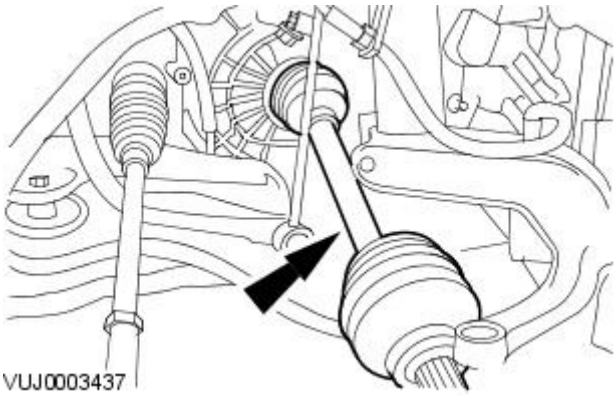

44. Install the left-hand halfshaft.

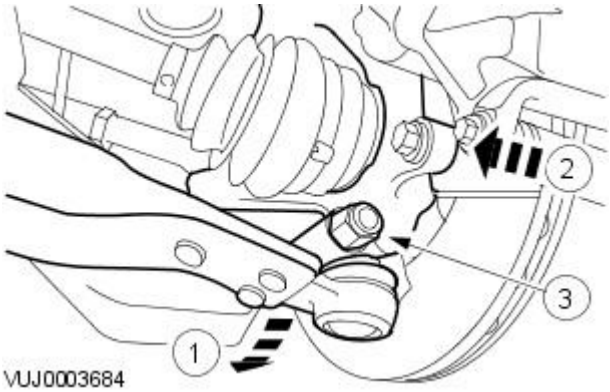

45. NOTE: Left-hand shown, right-hand similar.

• NOTE: Make sure the halfshaft is aligned to the front wheel hub.

Attach the wheel knuckles.

1. Reposition the lower arm.
2. Attach the wheel knuckles.
3. Install the lower arm ball joint retaining bolt.
   1. Tighten to 83 Nm.

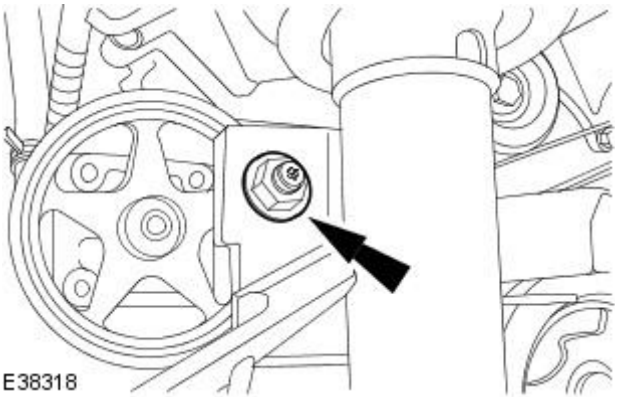

46. NOTE: Right-hand shown, left-hand similar.

Attach the stabilizer bar link arms.

- Tighten to 48 Nm.

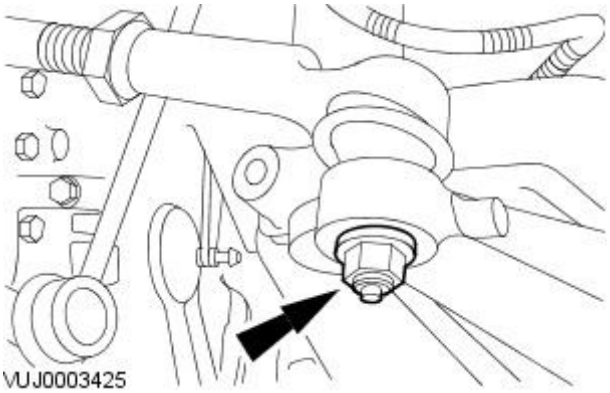

47. NOTE: Left-hand shown, right-hand similar.

Attach the tie rod ends.

- Tighten to 35 Nm.

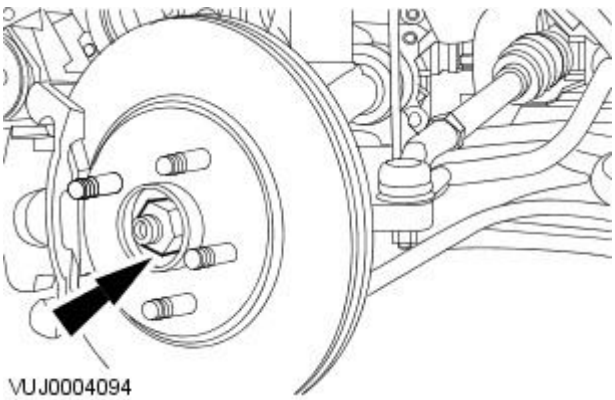

48. NOTE: Left-hand shown, right-hand similar.

• NOTE: Do not tighten the front wheel hub retaining nuts at this stage.

Install the front wheel hub retaining nuts.

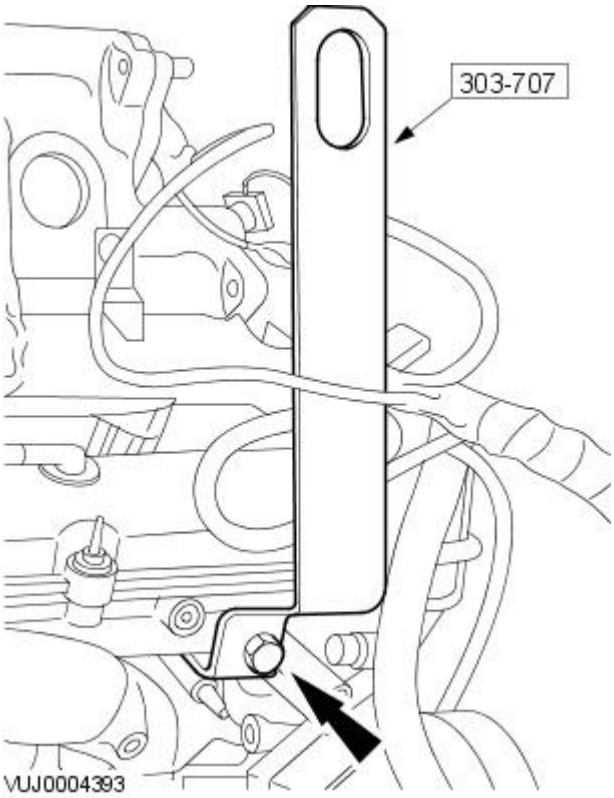

49. Remove the special tool.

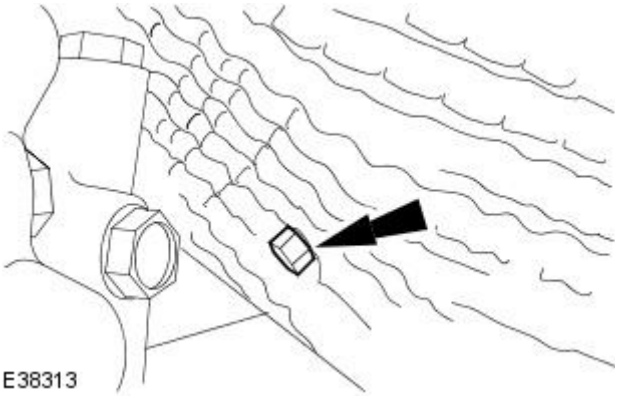

50. Install the center exhaust heat shield.

- Tighten to 10 Nm.

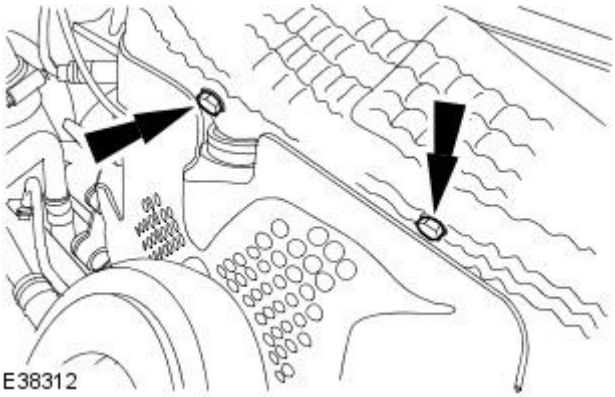

51. Install the center exhaust heat shield retaining bolts.

- Tighten to 10 Nm.

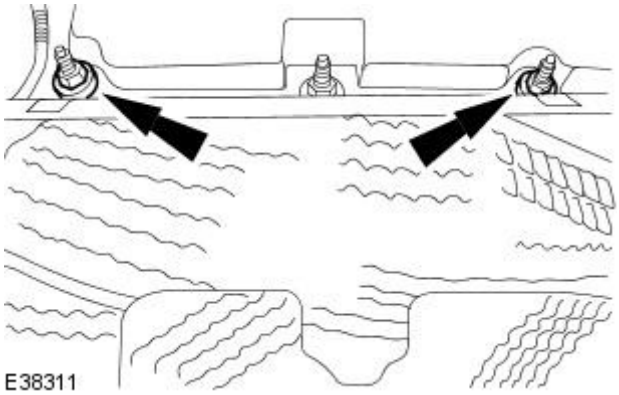

52. Install the upper exhaust heat shield.

- Tighten to 6 Nm.

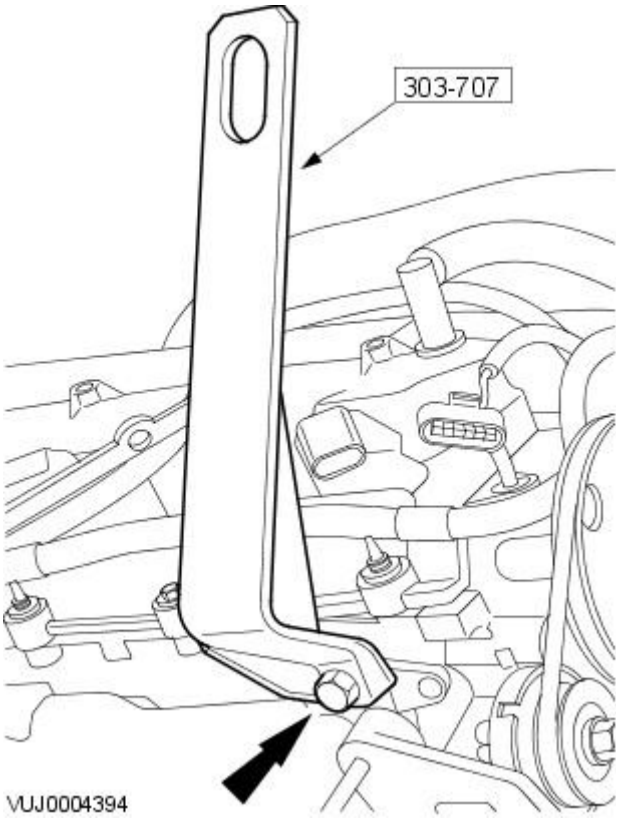

53. Remove the special tool.

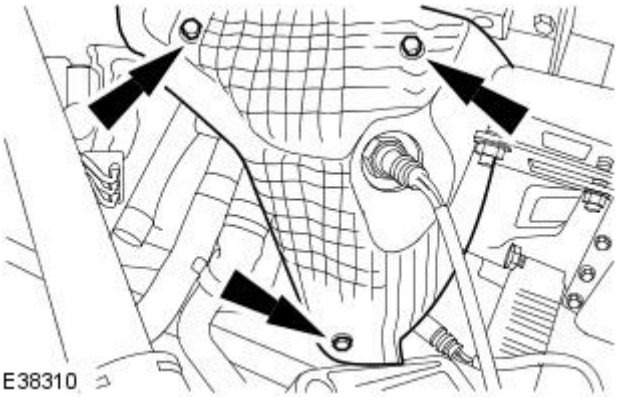

54. Install the left-hand exhaust manifold heat shield.

- Tighten to 10 Nm.

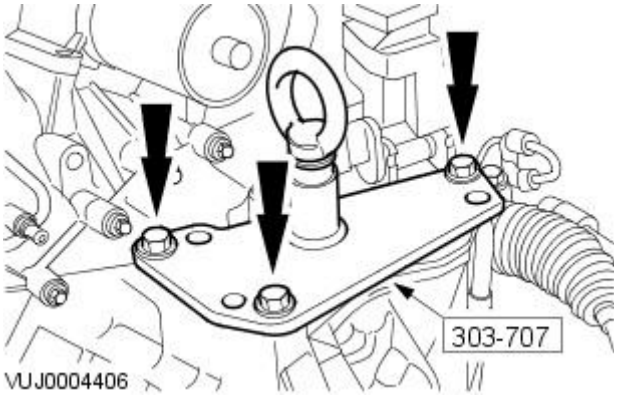

55. Remove the special tool.

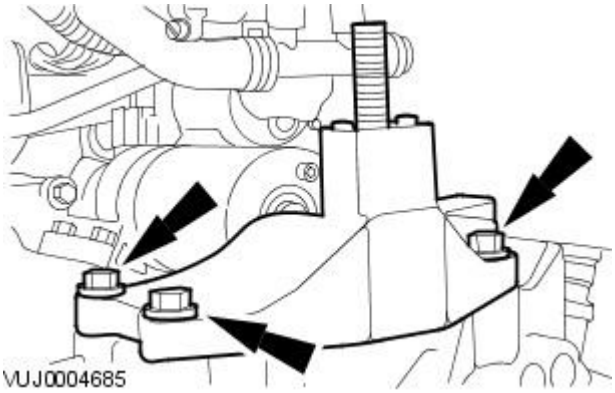

56. Install the transaxle mount.

- Tighten to 80 Nm.

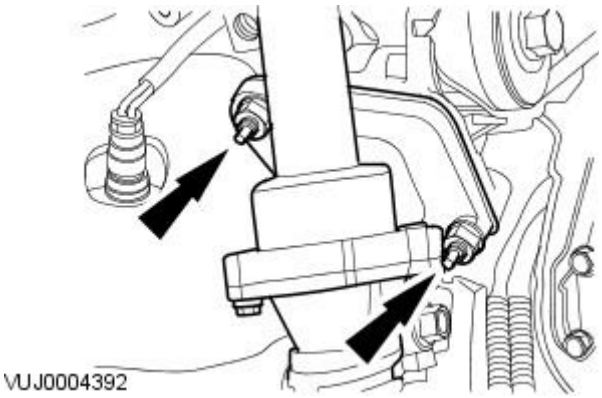

57. Install the coolant system top hose.

- Install a new gasket.
- Tighten to 9 Nm.

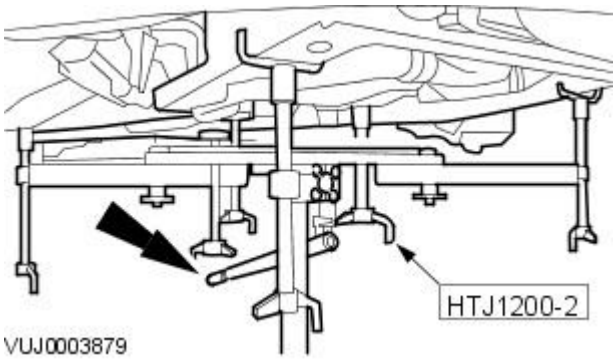

58. WARNING: Raise the special tool platform slowly. Failure to follow this instruction can result in personal injury.

Install the engine and transaxle assembly.

- Raise the special tool platform.

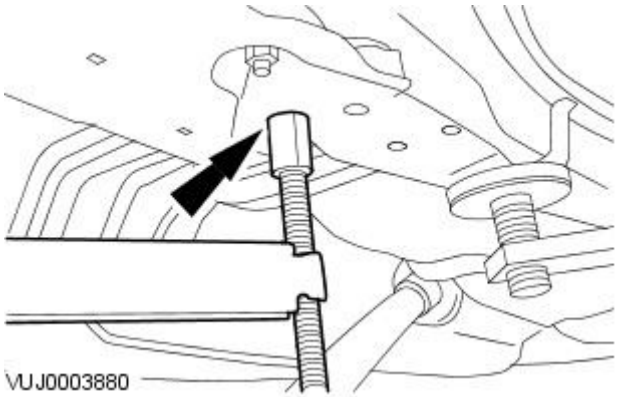

59. NOTE: Left-hand shown, right-hand similar.

Make sure the special tool rear height adjuster aligns into the locating hole in the vehicle floor pan.

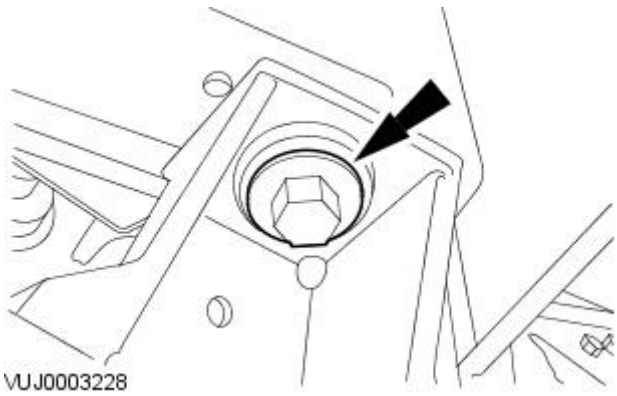

60. NOTE: Left-hand shown, right-hand similar.

Loosely install the front subframe retaining bolt.

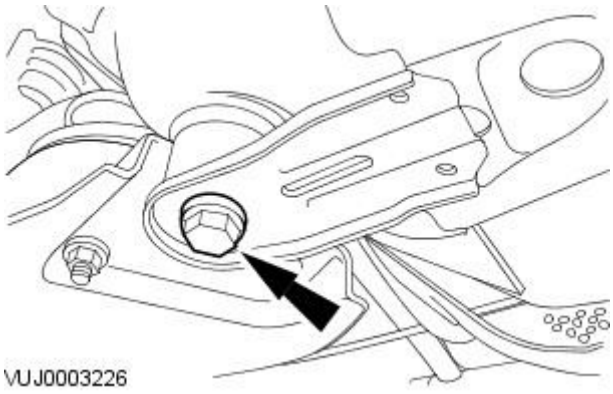

61. NOTE: Left-hand shown, right-hand similar.

Install the front subframe reinforcement plate.

- Loosely install the front subframe rear retaining bolt.

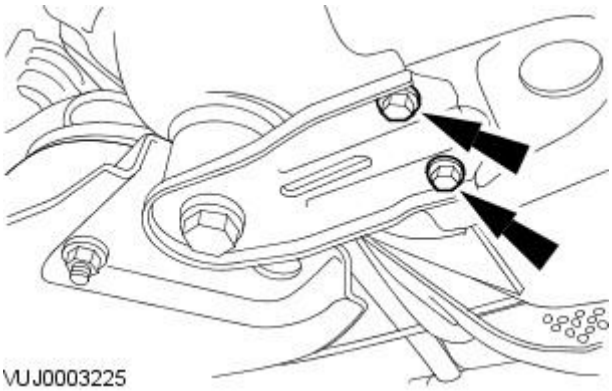

62. NOTE: Left-hand shown, right-hand similar.

Tighten the front subframe reinforcement bolts.

- M8 to 35 Nm.
- M10 to 70 Nm.

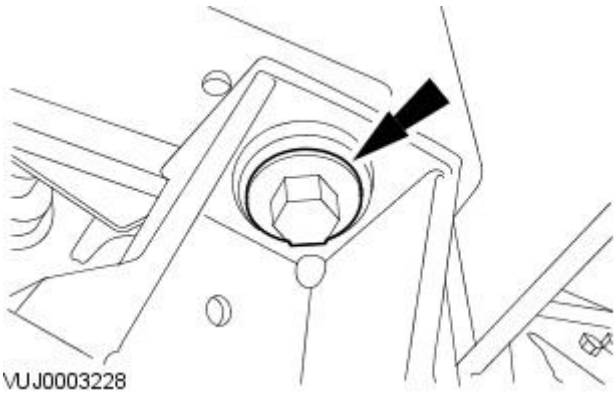

63. NOTE: Left-hand shown, right-hand similar.

Tighten the front subframe retaining bolt.

- Tighten to 142 Nm.

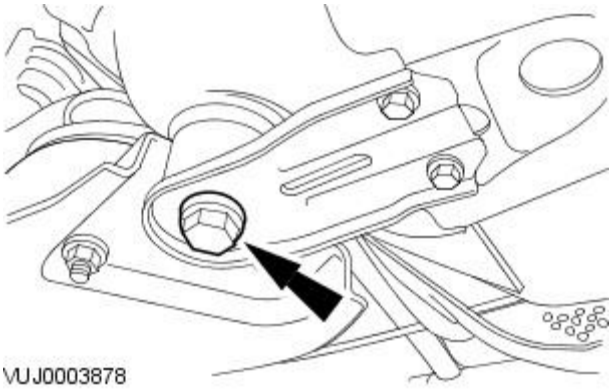

64. NOTE: Left-hand shown, right-hand similar.

Tighten the front subframe rear retaining bolt.

- Tighten to 142 Nm.

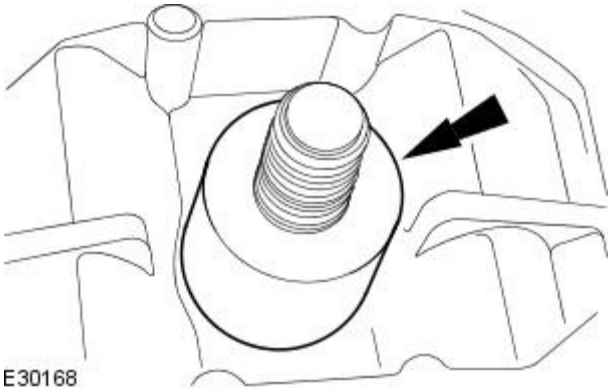

65. Install the spacer.

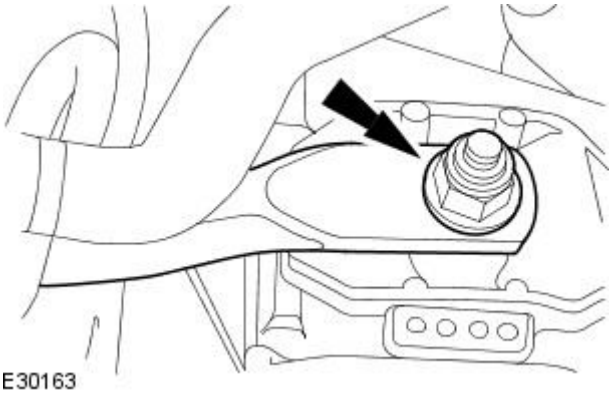

66. Install the support bar.

- Tighten to 133 Nm.

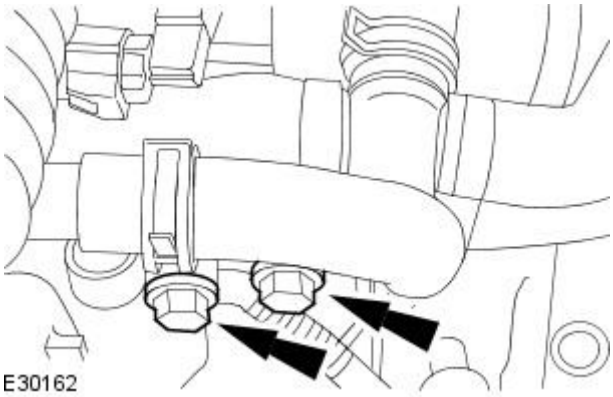

67. Tighten to the support bar retaining bolts.

- Tighten to 25 Nm.

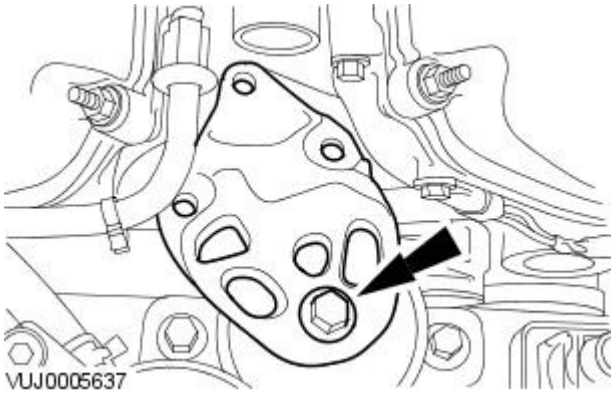

68. Install the engine support bracket.

- Tighten to 80 Nm.

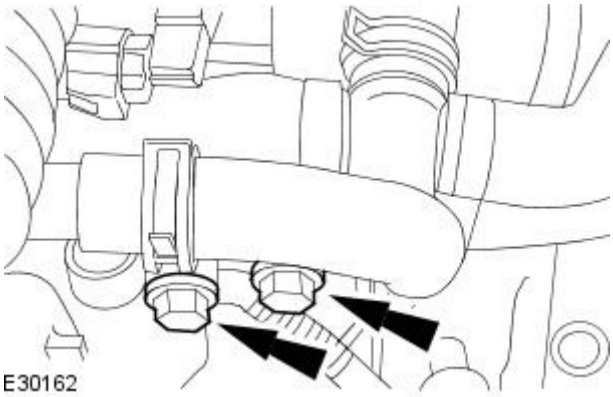

69. Tighten the support bar retaining bolts.

- Tighten to 25 Nm.

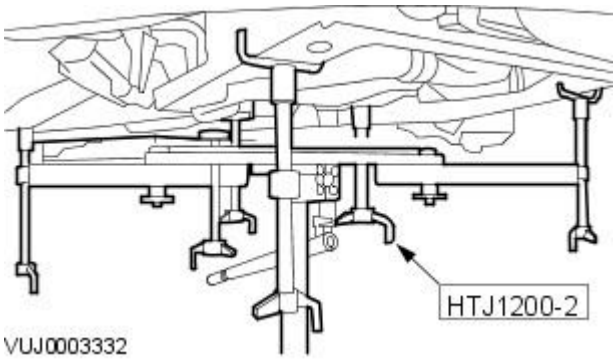

70. Remove the special tool.

71. Lower the vehicle.

72. NOTE: Right-hand shown, left-hand similar.

Attach the strut and spring assembly.

- Tighten to 30 Nm.

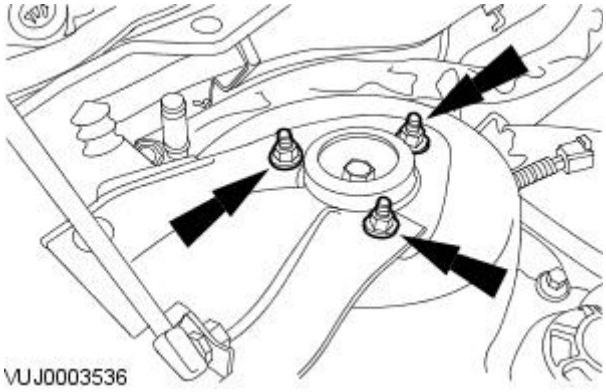

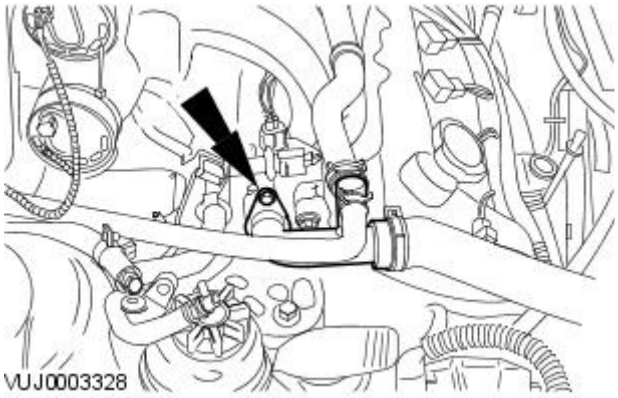

73. Attach the coolant pipe.

- Tighten to 9 Nm.

74. Connect the spring lock coupling.
For additional information, refer to: Spring Lock Couplings (310-00 Fuel System - General Information, General Procedures).

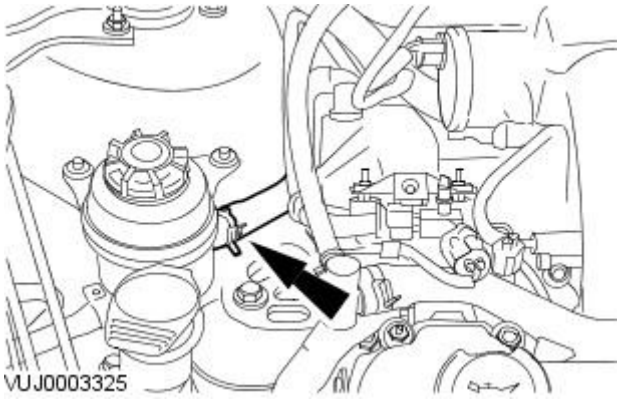

75. NOTE: Remove the blanking plug from the hose.

Attach the power steering hose.

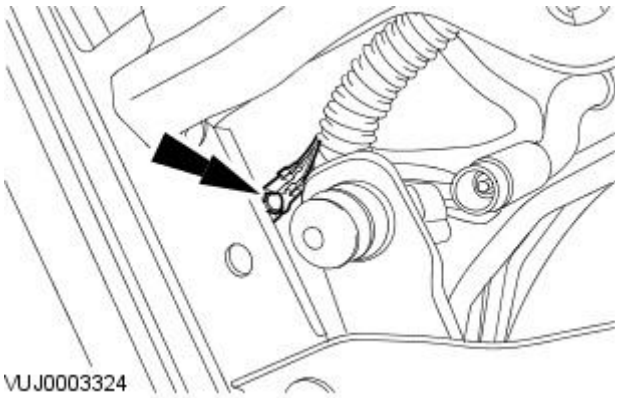

76. Connect the ground cable.

- Tighten to 10 Nm.

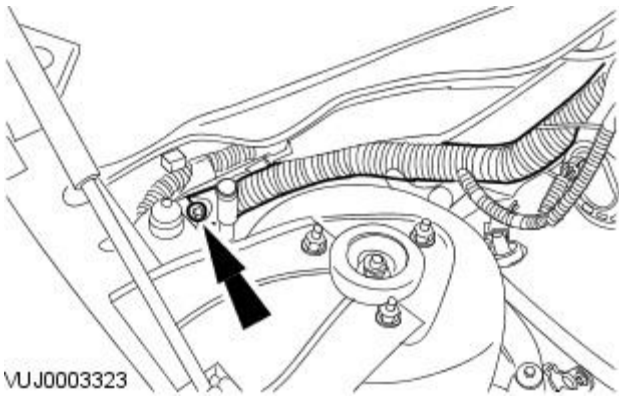

77. Connect the engine control module (ECM) electrical connector.

- Using special tool 418-535, tighten to 5 Nm.

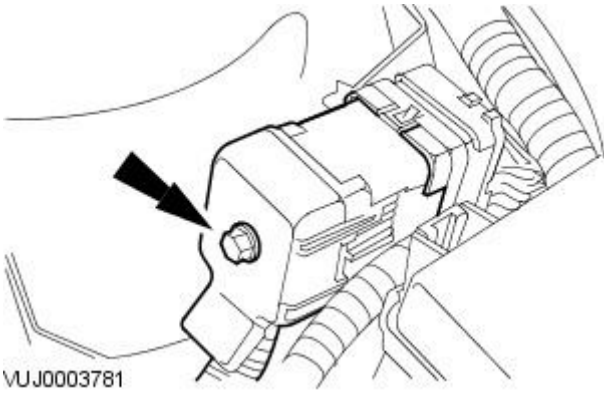

78. Connect the engine harness electrical connector.

- Tighten to 10 Nm.

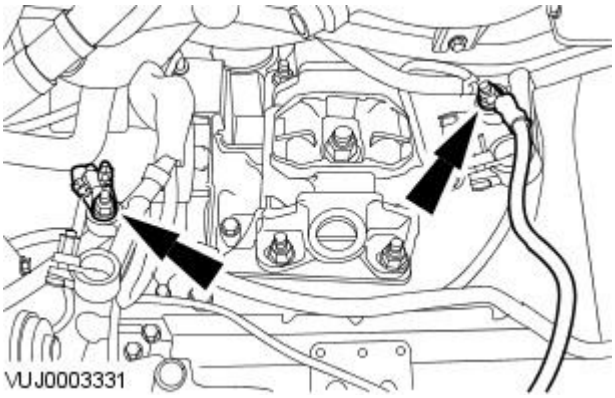

79. Attach the battery cables.

- Tighten to 10 Nm.

Vehicles with 2.0L engine

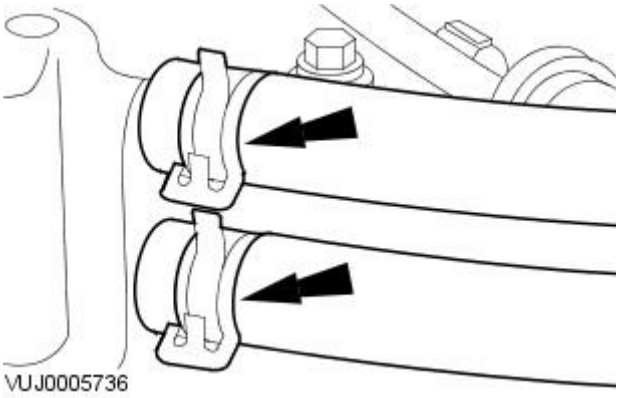

80. Attach the coolant hoses.

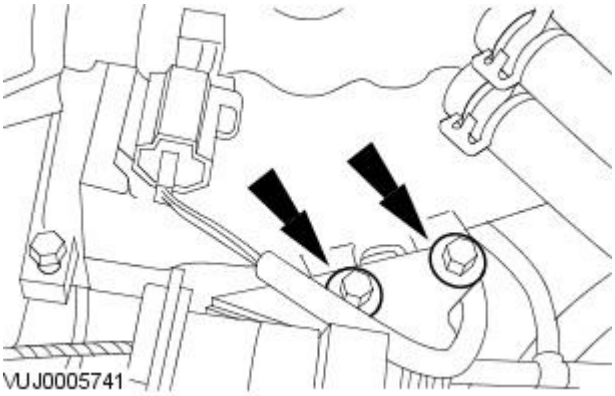

81. Attach the accelerator cable retaining bracket.

- Tighten to 9 Nm.

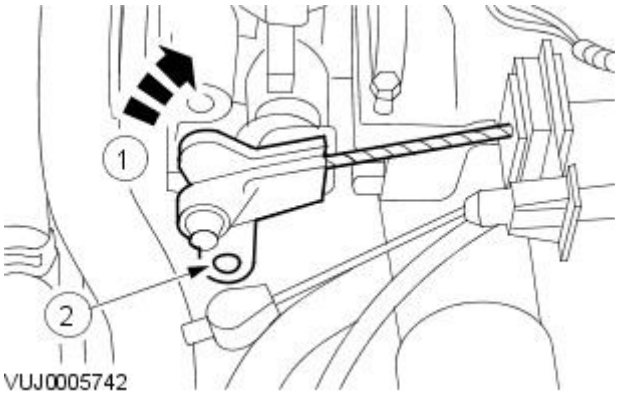

82. Attach the accelerator cable.

1. Reposition the accelerator lever to the fully open position.
2. Attach the accelerator cable.

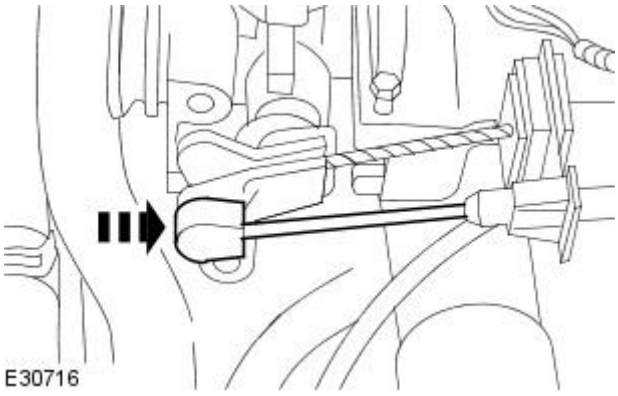

83. Attach the cruise control cable.

All vehicles

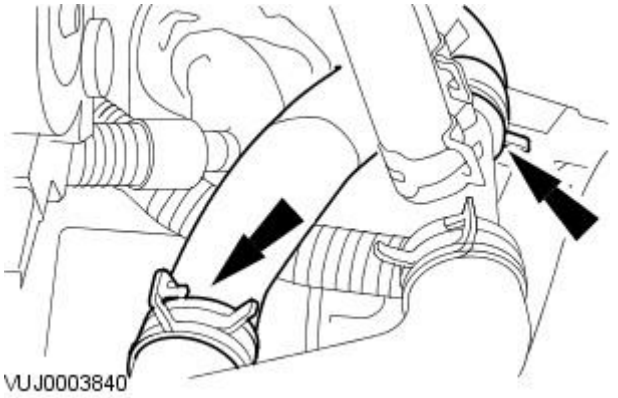

84. Attach the coolant hoses.

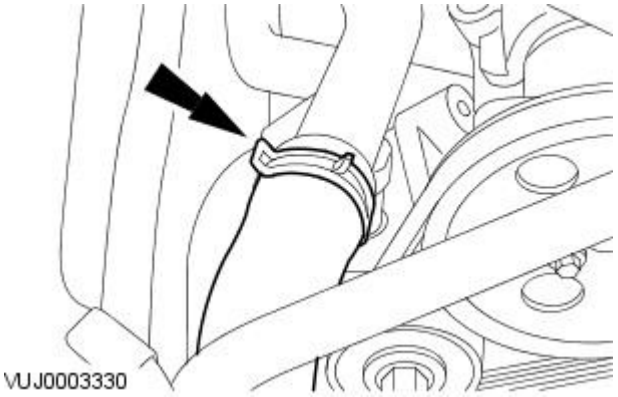

85. Attach the coolant hose.

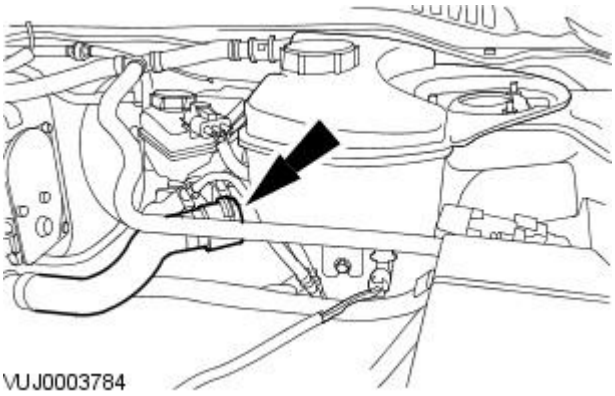

86. Attach the coolant hose.

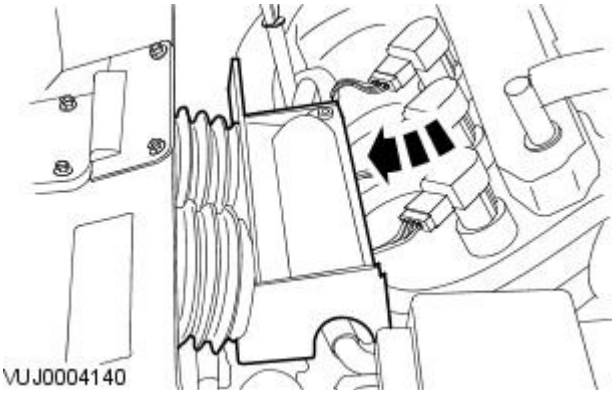

87. Install the air filter intake pipe.

88. Install the air cleaner.
For additional information, refer to: Air Cleaner (303-12A Intake Air Distribution and Filtering - 2.0L NA V6 - AJV6/2.5L NA V6 - AJV6/3.0L NA V6 - AJ27, Removal and Installation).

89. Raise the vehicle.

90. Attach the coolant hose.

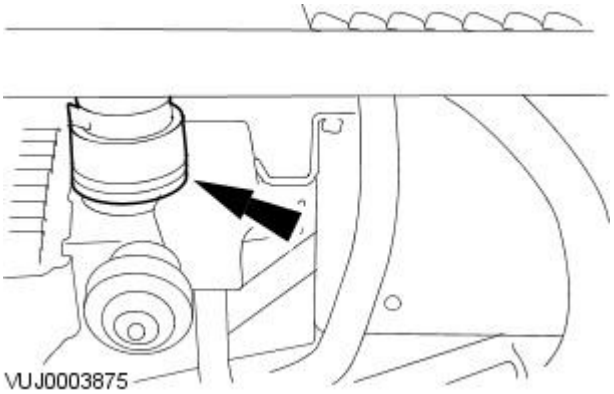

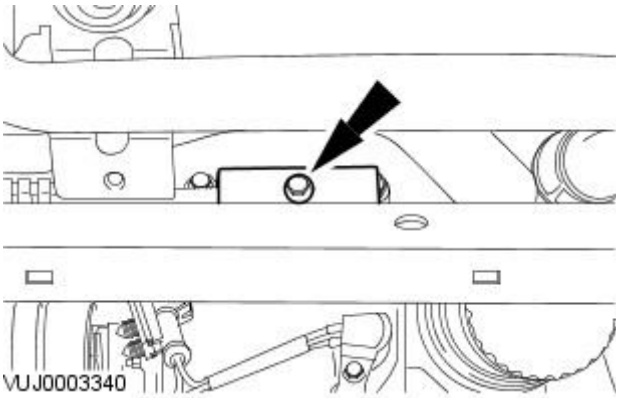

91. NOTE: Remove the tie straps.

• NOTE: Remove the blanking plugs from the tube and the air conditioning (A/C) compressor.

Attach the air conditioning (A/C) compressor supply and return tubes.

- Install new O-ring seals.
- Tighten to 25 Nm.

92. Install the front muffler.
For additional information, refer to: Front Muffler - 2.0L NA V6 - AJV6/2.5L NA V6 - AJV6/3.0L NA V6 - AJ27 (309-00 Exhaust System, Removal and Installation).

Vehicles with 2.5L or 3.0L engine

93. Install the driveshaft.
For additional information, refer to: Driveshaft (205-01 Driveshaft, Removal and Installation).

All vehicles

94. Install the cooling fan motor and shroud.
For additional information, refer to: Cooling Fan Motor and Shroud (303-03A Engine Cooling - 2.0L NA V6 - AJV6/2.5L NA V6 - AJV6/3.0L NA V6 - AJ27, Removal and Installation).

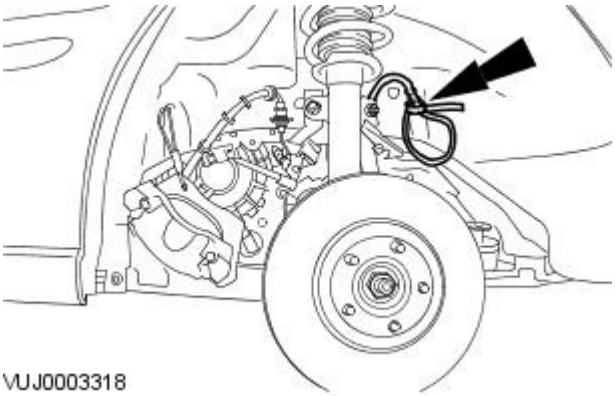

95. NOTE: Remove the tie straps.

- NOTE: Left-hand shown, right-hand similar.

Detach and reposition the anti-lock brake system (ABS) wheel speed sensor.

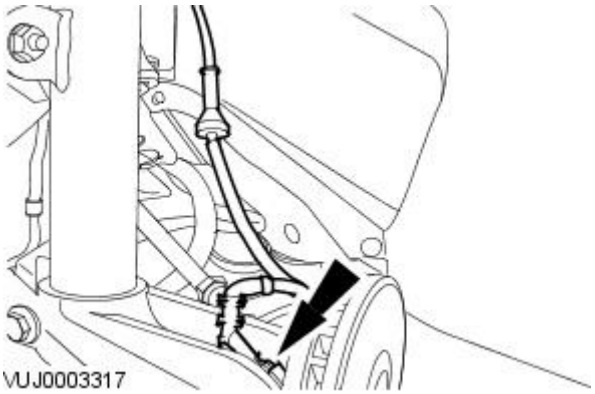

96. NOTE: Left-hand shown, right-hand similar.

Connect the ABS wheel speed sensor.

- Tighten to 5 Nm.

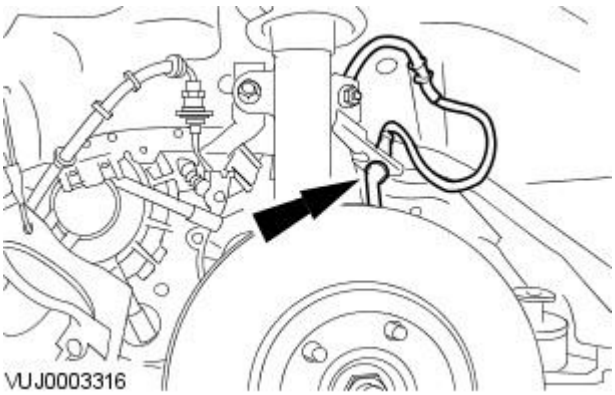

97. NOTE: Left-hand shown, right-hand similar.

Attach the ABS wheel speed sensor.

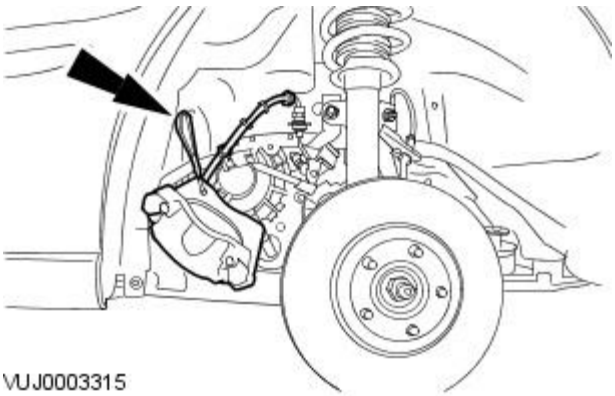

98. NOTE: Remove the tie straps.

- NOTE: Left-hand shown, right-hand similar.

Detach and reposition the brake caliper assembly.

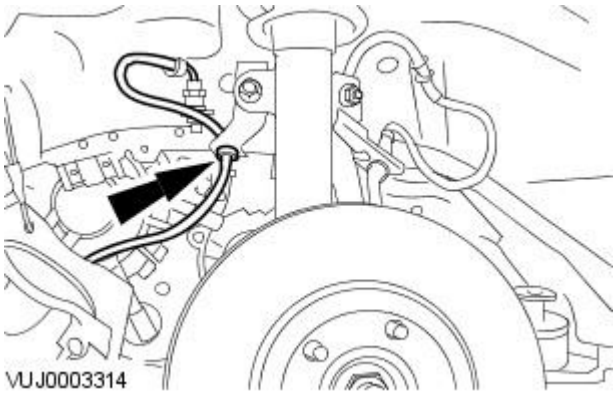

99. NOTE: Left-hand shown, right-hand similar.

Attach the brake pipe.

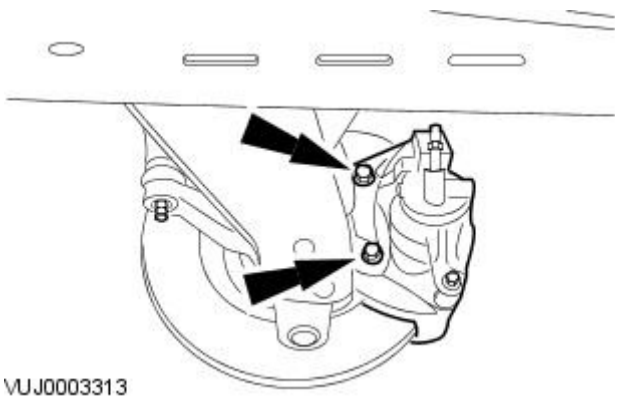

100. NOTE: Left-hand shown, right-hand similar.

• NOTE: Install new brake caliper anchor plate retaining bolts.

Attach the brake caliper assembly.

- Tighten to 133 Nm.

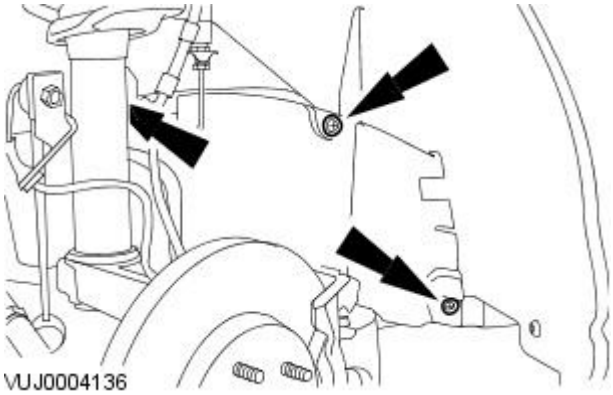

101. NOTE: Right-hand shown, left-hand similar.

Install the splash shield.

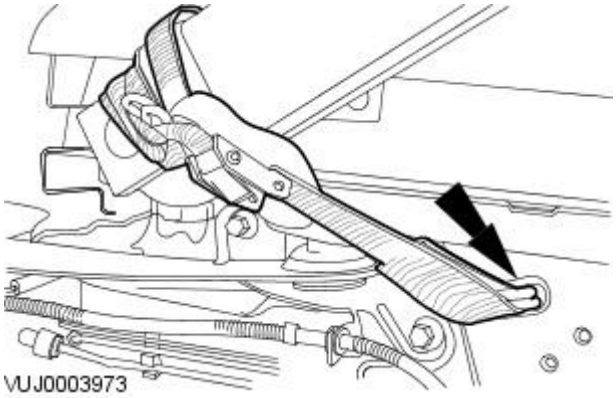

102. NOTE: Right-hand shown, left-hand similar.

Remove the rear vehicle tie down strap.

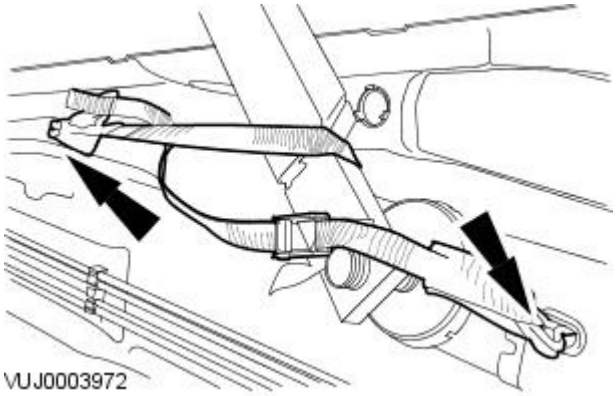

103. NOTE: Right-hand shown, left-hand similar.

Remove the front vehicle tie down strap.

104. Install the front wheels and tires.
For additional information, refer to: Wheel and Tire (204-04 Wheels and Tires, Removal and Installation).

105. Install the battery tray.
For additional information, refer to: Battery Tray (414-01 Battery, Mounting and Cables, Removal and Installation).

106. Fill and bleed the cooling system.
For additional information, refer to: Cooling System Draining, Filling and Bleeding (303-03A Engine Cooling - 2.0L NA V6 - AJV6/2.5L NA V6 - AJV6/3.0L NA V6 - AJ27, General Procedures).

107. Bleed the power steering system.
For additional information, refer to: Power Steering System Filling (211-00 Steering System - General Information, General Procedures).

108. Recharge the A/C refrigerant.
For additional information, refer to: Air Conditioning (A/C) System Recovery, Evacuation and Charging (412-00 Climate Control System - General Information, General Procedures).

109. Install the steering column lower retaining bolt.

- Tighten to 25 Nm.

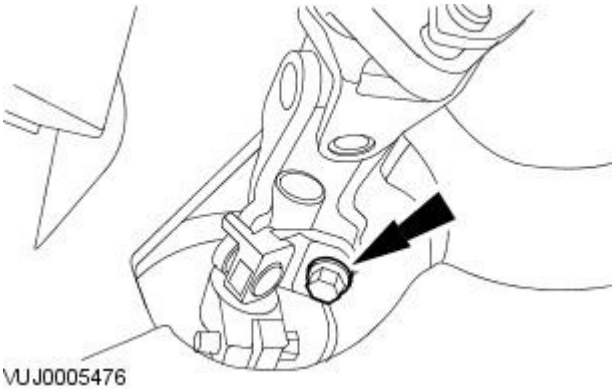

110. Fill the transaxle.
For additional information, refer to: Transmission Fluid Drain and Refill (307-01B Automatic Transmission/Transaxle - Vehicles With: 6-Speed Automatic Transaxle - AWF21, General Procedures).

111. NOTE: Left-hand shown, right-hand similar.

Tighten the front hub retaining nuts.

- Tighten to 290 Nm.

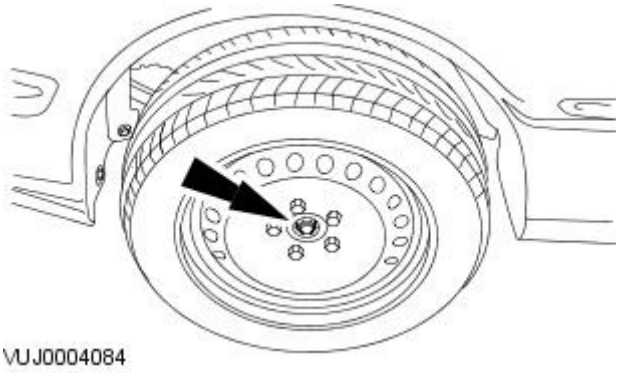

112. Carry out the underbody misalignment check.
For additional information, refer to: Underbody Misalignment Check (502-00 Uni-Body, Subframe and Mounting System, General Procedures).

113. Check the engine oil level and correct as necessary.

114. NOTE: When the battery has been disconnected and reconnected, some abnormal drive symptoms may occur while the vehicle relearns its adaptive strategy.

Finishing operations.

- Check the routing of the vacuum hoses and wiring and secure them with cable ties.
- Check the fluid levels after the road test and correct as necessary.
- Check the engine and cooling system for leaks (visual inspection).

Engine - 2.0L Duratorq-TDCi / 2.2L Duratorq-TDCi (110kW / 150PS) - Puma -

Engine Oil Capacity

Description	Liters
Initial fill including oil filter	6·7
Service fill including oil filter	6·0
Service fill without oil filter	5·8

Lubricants, Sealers and Adhesives

Item	Specification
SAE 5W-30 engine oil	WSS-M2C913-B
Sealant – Loctite 5910	WSE-M4G323-A4

Oil Pressure – Specifications

Description	Bar
Maximum oil pressure at idle speed	1·2
Maximum oil pressure at 2000 rpm	2·0

Tightening Torques

Description	Nm	lb-ft	lb-in
Engine to transmission retaining bolts	40	30	-
Rear engine mount retaining stud	133	98	-
Front engine mounting	80	59	-
Engine roll restrictor to transmission	80	59	-
Front subframe rear bolts	142	105	-
Front subframe rear bracket bolts	70	52	-
Steering gear to subframe	133	98	-
Engine roll restrictor to subframe	80	59	-
Lower suspension arm ball joint	83	61	-
Axle driveshaft center bearing	25	18	-
Engine ground cable	13	10	-
Thermostat housing	23	17	-
Thermostat cover	10	-	89
Crankshaft pulley	a	-	-
Crankshaft rear oil seal carrier	10	-	89
Flywheel	a	-	-
Crankshaft bearing caps	a	-	-
Big-end bearing caps	a	-	-
Fuel injectors	47	35	-
Injection pump sprocket	33	24	-
Injector tubes	38	28	-
Lower crankcase	a	-	-
Camshaft carrier (M8)	a	-	-
Camshaft carrier (M6)	a	-	-
Rocker shafts	a	-	-
Timing chain guides	15	11	-
Timing chain tensioner	15	11	-
Oil pump chain tensioner	16	12	-
Camshaft sprocket	33	24	-
Auxiliary unit drive belt tensioner	23	17	-
Exhaust gas recirculation valve (EGR valve)	10	-	89
Line for EGR valve	23	17	-
Coolant pump	25	18	-
Dip stick tube (M8 x 14)	23	17	-
Oil intake pipe.	10	-	89
Oil filter cooler	23	17	-
Oil pump	10	-	89
Oil pan drain plug	23	17	-
Oil pan	a	-	-
Cylinder head bolts (M10 x 160)	a	-	-
Cylinder head bolts (M8 x 120)	a	-	-
Engine front cover	a	-	-
Glow plugs	13	10	-
Glow plug wires (M4 x 14)	3	-	27
Power steering pump	18	13	-
Power steering pump bracket	23	17	-
Intake manifold	16	12	-
Exhaust manifold and turbocharger	40	30	-
Turbocharger oil return line	10	-	89
Turbocharger oil feed line	14	10	-
Front engine lifting eye (M8 x 20)	23	17	-
Common rail studs	23	17	-
Knock sensor (KS)	20	15	-
Crankshaft position sensor (CKP sensor) (M6 x 16)	7	-	62
Camshaft position sensor (CMP sensor)	10	-	89
Cylinder head temperature sensor (CHT sensor)	11	8	-

a = Refer to the procedure in this section.

Engine - 2.0L Duratorq-TDCi / 2.2L Duratorq-TDCi (110kW / 150PS) - Puma - Engine

Description and Operation

General View

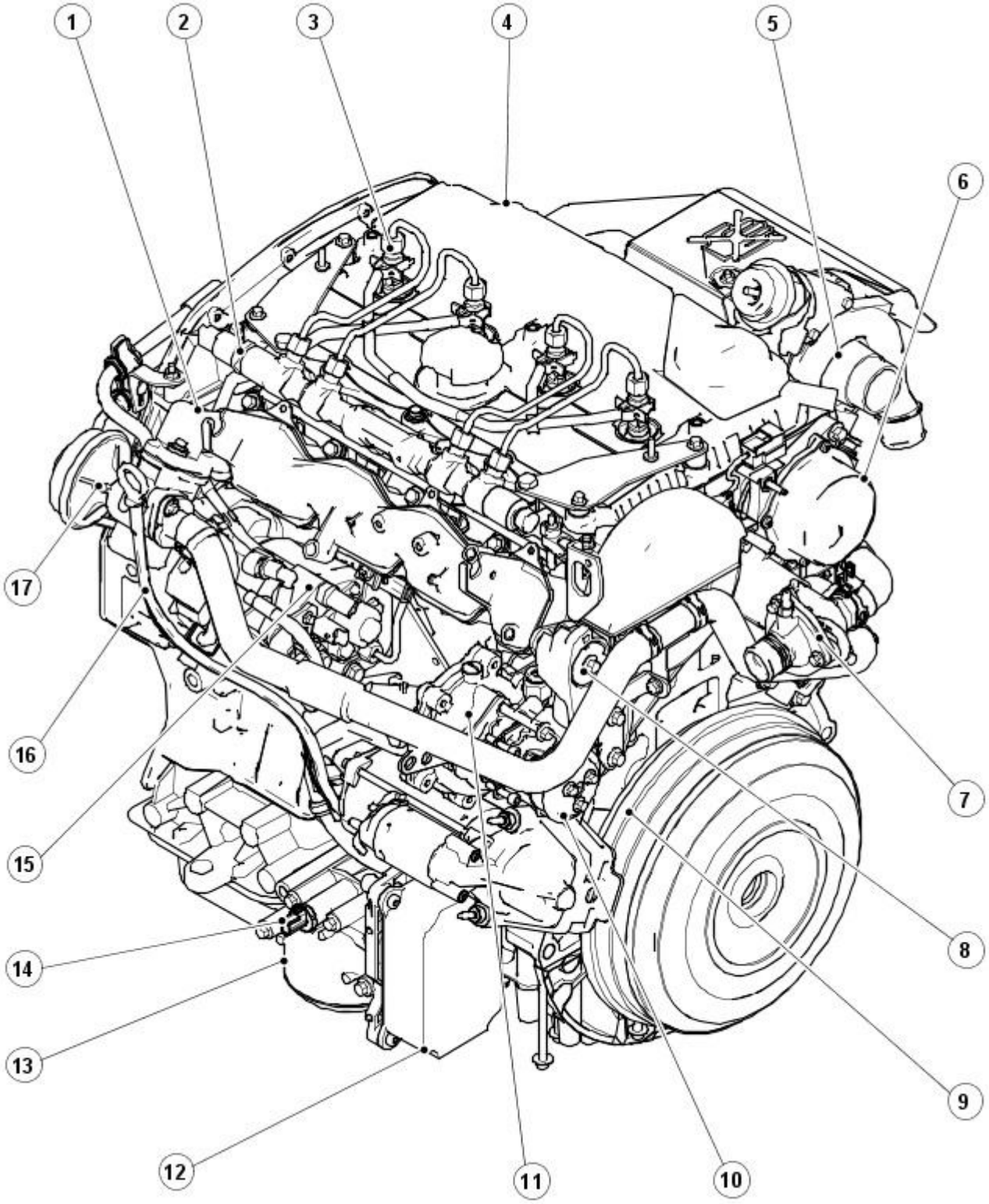

E44113

Item	Part Number	Description
1	-	Intake manifold
2	-	Fuel injection supply manifold
3	-	Fuel injector
4	-	Valve cover
5	-	Turbocharger
6	-	Brake vacuum pump
7	-	Thermostat housing
8	-	Rear accessory drive belt tensioner
9	-	Flywheel
10	-	Power steering pump
11	-	Waterpump
12	-	Oil cooler
13	-	Oil filter housing

14	-	Oil pressure switch
15	-	Fuel injection pump
16	-	Oil level indicator and tube
17	-	Exhaust gas recirculation (EGR) valve

Engine Identification Code

Engine code and engine serial number

The engine code (4-digit) and the engine serial number (consisting of two letters for the year and month and five numbers, which constitute the serial number) are located on the cylinder block, adjacent to the injection pump.

When replacing the engine or the cylinder block, the vehicle identification number must be stamped at the location indicated.

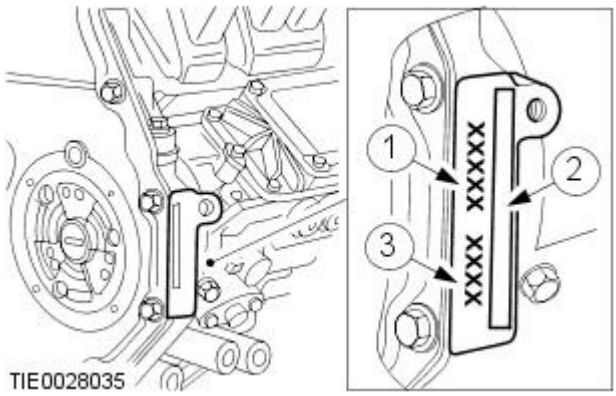

Item	Part Number	Description
1	-	Engine serial number
2	-	Vehicle identification number
3	-	Engine code

General

The 2.0L and 2.2L diesel engines are both 4-cylinder, 16-valve, common rail direct injection turbo charged diesel engines.

This diesel engine design incorporates twin rocker shafts with 16 valves operated by hydraulically adjusted rocker arm. The intake ports are designed to ensure optimum charging and swirl of the mixture charge of air and fuel at all engine speeds.

The two overhead camshafts and the fuel injection pump are driven by means of multilink chain with automatic hydraulic adjustment.

The new design of cylinder head and high fuel pressures produces an optimum torque curve. Continuous torque is maintained even at low engine speed.

The engine features smooth running characteristics, achieved through the use of a modern engine management system and an advanced fuel injection system.

Low fuel consumption of the engine is the result of efficient combustion and high injection pressures which has also led to reduced emissions of carbon dioxide CO2.

Fuel metering is controlled electronically by a mapped engine management system (EMS) with driver input with fly by wire accelerator. These characteristics, including electronically controlled EGR system coupled with an oxidation catalyst, meet current exhaust emission standards. In addition, the engine has the potential to meet future exhaust emission limits.

European Stage 4 Diesel Emissions - Vehicles built from VIN:E25782

In order to meet European stage 4 diesel emission legislation, the 2.0L diesel engine has the following changes:-

- A revised piston crown design to improve combustion swirl.
- An electronically controlled turbocharger.
  For additional information, refer to: Turbocharger (303-04C Fuel Charging and Controls - Turbocharger, Description and Operation).
- An electronically controlled EGR system.

These changes have therefore been utilized on the 2.2L diesel engine.

Cylinder Head

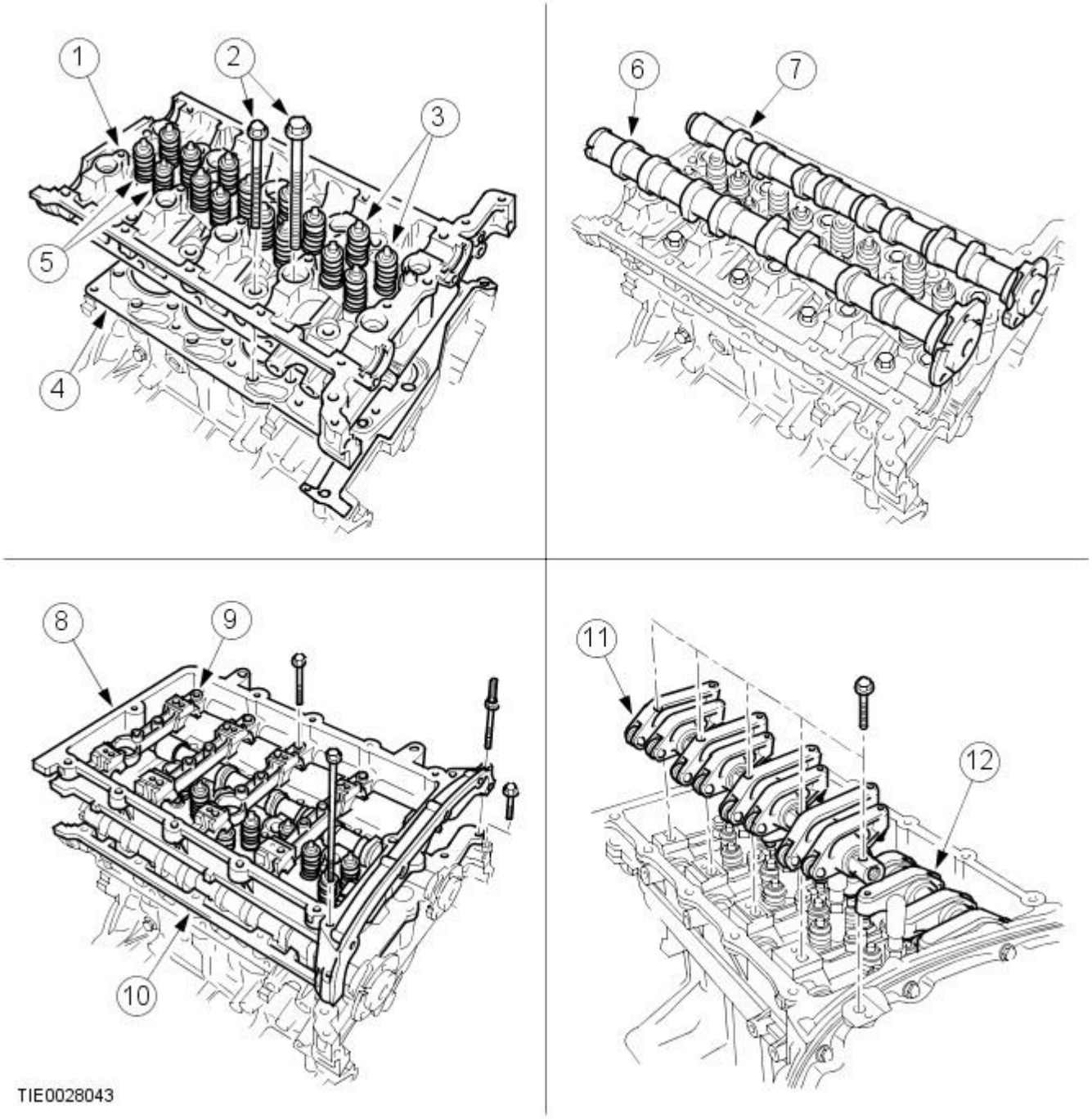

Item	Part Number	Description
1	-	Cylinder head
2	-	Cylinder head bolts
3	-	Intake valves
4	-	Cylinder head gasket
5	-	Exhaust valves
6	-	Exhaust camshaft
7	-	Intake camshaft
8	-	Camshaft carrier
9	-	Camshaft carrier bearing brackets (5 off)
10	-	Sealing surface
11	-	Rocker shaft with rocker arms (exhaust)
12	-	Rocker shaft with rocker arms (intake)

Cylinders head

The cylinder head is of aluminium construction and **CANNOT** be reworked. The cylinder head is secured to the engine block by two sizes of bolts the inner bolts being the larger. **THE CYLINDER HEAD BOLTS BOLTS MUST ALWAYS BE RENEWED**.

Rocker Arms

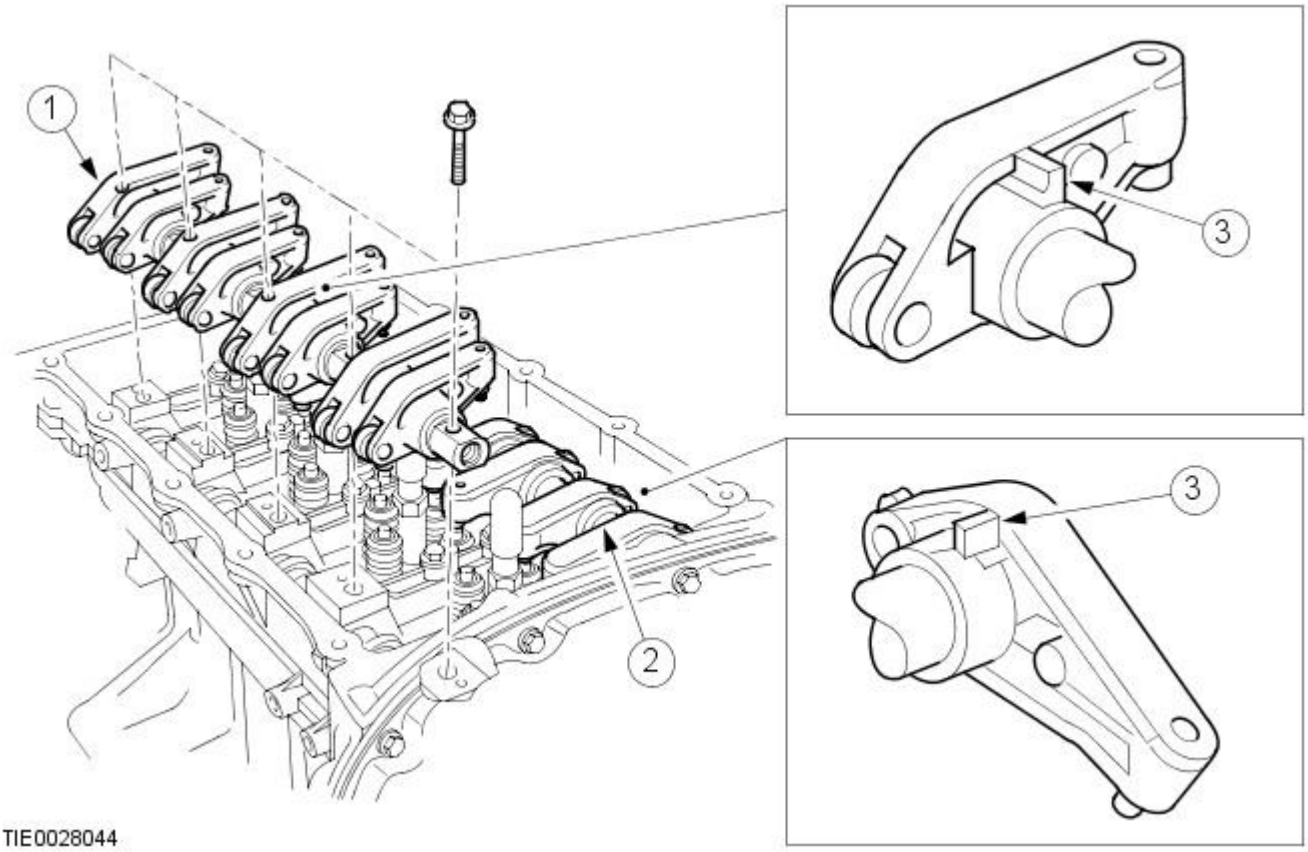

Item	Part Number	Description
1	-	Rocker shaft, exhaust rocker arm
2	-	Rocker shaft, intake rocker arm
3	-	Stud on rocker arm

The valves are operated by lightweight aluminium rocker arms, which are mounted on two rocker shafts. The rocker arms are of different lengths to match the offset valve configuration. Therefore, the distances between the inlet valves and exhaust valves differ. It will be noted that the inlet rocker shaft has helical springs fitted between the rocker arms; this is to keep the arms equally spaced. The rocker shafts are marked for assembly purpose and care must be taken to follow correct installation.

The rocker shafts are supplied with engine oil through oil bores. When installing the rocker shafts make sure that the oil bores face downwards. The rocker shafts are marked for assembly purpose and care must be taken to follow correct installation.

Front Cover

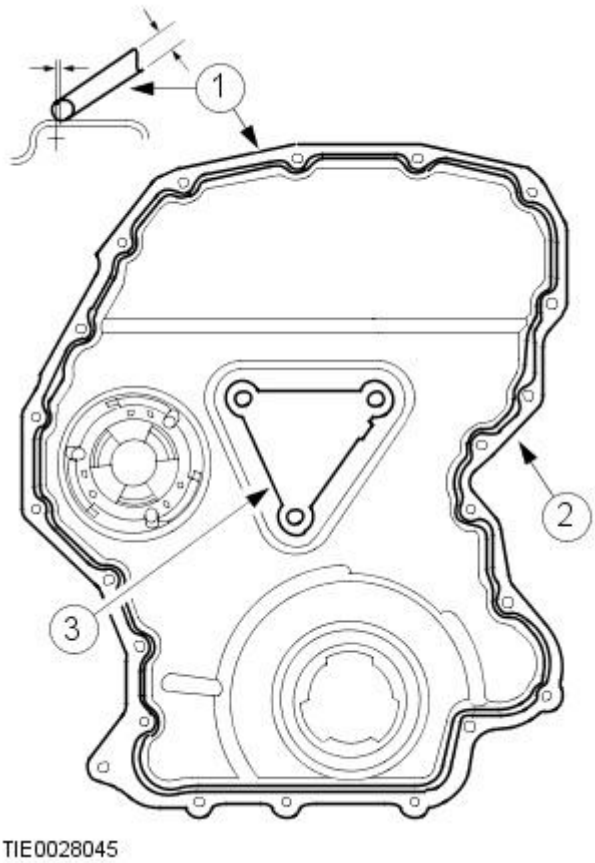

Item	Part Number	Description
1	-	Sealing bead
2	-	Engine front cover

3	-	Engine front cover gasket

Front Cover

The timing cover is of steel construction and is fitted using sealing compound. Prior to fitting, the mating faces on the timing case and cover must be cleaned thoroughly. A special tool is used to align the cover to the engine in relation to the crankshaft.

Camshaft cover

The camshaft cover is made from plastic composite material and is secured to the camshaft carrier. It also incorporates the crankcase ventilation and location for the fuel injector seals. The cover is sealed to the carrier by means of rubber gasket. The head incorporates four valves per cylinder to ensure improved cylinder charging. A vertical centrally placed fuel injector guarantees maximum distribution of fuel into the combustion chamber. The valve stem oil seals also form the lower guide for the valve spring.

Pistons and connecting rods

Connecting rod dimensions

The connecting rods of the diesel engine are divided into the following length categories:

- K
- L
- M

• NOTE: For tolerances refer to the specifications table.

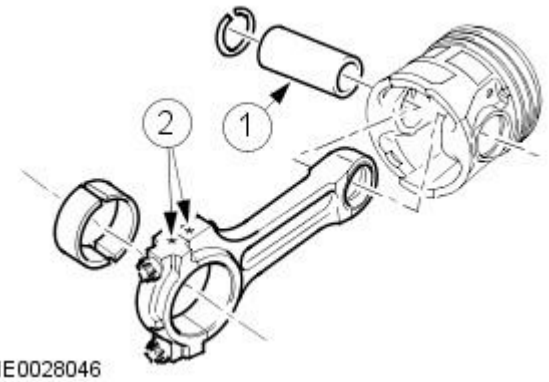

Item	Part Number	Description
1	-	Piston pin
2	-	Length category

Piston

The piston crown incorporates a pronounced bowl that forms the combustion chamber. This promotes swirl and turbulence which is necessary for good combustion and improved emission. In addition, the piston skirt, which comes into contact with the cylinder bore, has molybdenum-coated surfaces. These counteract scoring of the cylinder and piston therefore helping to increase engine life.

When installing the pistons, it must be ensured that the arrow on the piston points to the timing chain side.

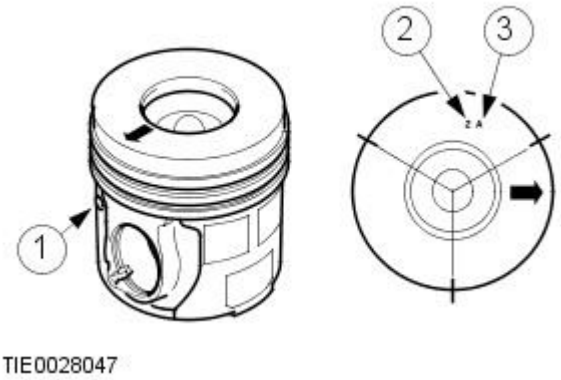

Item	Part Number	Description
1	-	Mark on piston skirt
2	-	Engine cooling code
3	-	Piston skirt diameter code

Oil Spray Nozzles

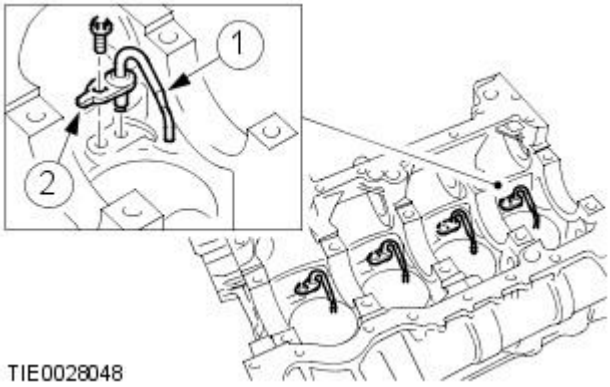

Item	Part Number	Description
1	-	Oil spray nozzle
2	-	Tab

The piston also incorporates an oil gallery for cooling purposes. This is supplied by oil spray nozzles which are located in engine block oil gallery. Optimum piston cooling is ensured, which is necessary due to high power output and high combustion temperatures.

Oil pump

The oil pump is a gear-type pump and is bolted to the underside of the bedplate. It is driven from the crankshaft by means of a chain, and is fitted with its own hydraulic tensioner. Care must be taken when the oil pump is installed. The sprocket on the oil pump must be aligned precisely with the sprocket on the crankshaft, to prevent noise and premature chain failure.

Oil cooler and filter

The oil cooler forms a unit with the oil filter and is mounted on the side of the cylinder block. The oil is cooled using the engine cooling system. This eliminates an additional oil cooler remotely mounted. The engine is lubricated by a forced-feed oil circulation system with full flow oil filter. The oil filter and cooler is designed to incorporate the oil filter.

Crankshaft

The crankshaft has induction-hardened journals which run in five bearings with clamped two-layer bearing shells. The bearing shells are made of steel and roll-bounded aluminium-tin alloy. The upper shell of main bearing No 3 is flanged which limits the end float of the crankshaft. All main bearing caps are numbered and are marked with an arrow which must point towards the timing chain.

Cylinder Block

The cylinder block is made of grey cast iron with the cylinder bores machined directly into the block. Three different bore diameters are in production to ensure precise clearance between pistons and cylinders. Once the bore diameter has been established the optimum piston is fitted.

Engine - 2.0L Duratorq-TDCi / 2.2L Duratorq-TDCi (110kW / 150PS) - Puma - Crankshaft Front Seal

In-vehicle Repair

Special Tool(s)	
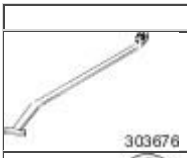 303676	Release tool, belt tensioner 303-676
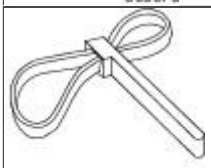 303D055	Wrench strap-universal 303-D055
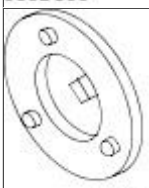 303679	Remover/Installer, Front Oil Seal 303-679 (21-238)

Removal

1. Remove the front road wheel and tire.
   For additional information, refer to: Wheel and Tire (204-04 Wheels and Tires, Removal and Installation).
2. Remove the right-hand wheel arch liner access panel.

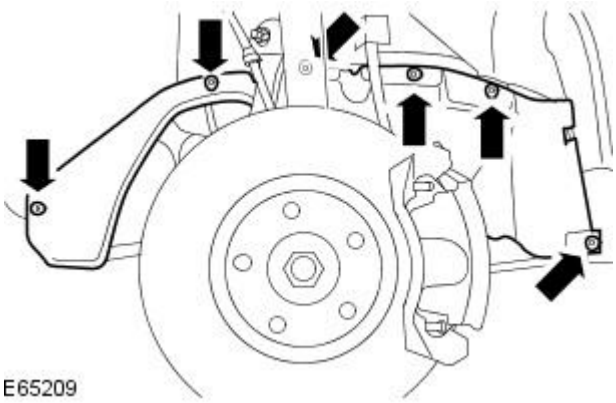

3. Using the special tool, detach the accessory drive belt.

4. Using the special tool, remove the crankshaft pulley.
   - Remove and discard the crankshaft pulley bolts.

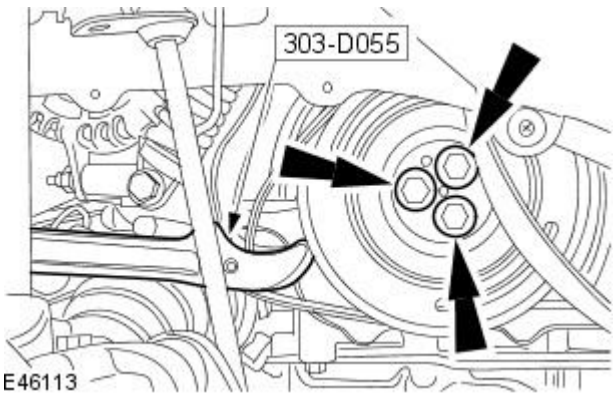

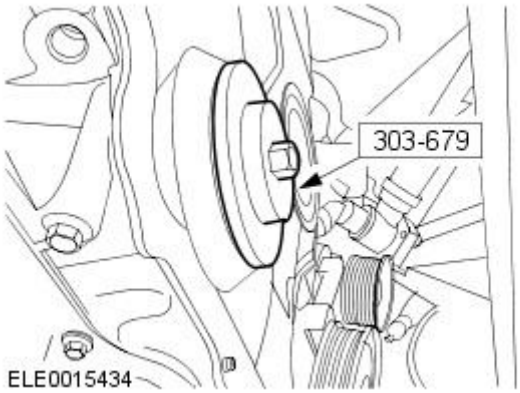

5. Using the special tool, remove the crankshaft front oil seal.

- Discard the oil seal.

Installation

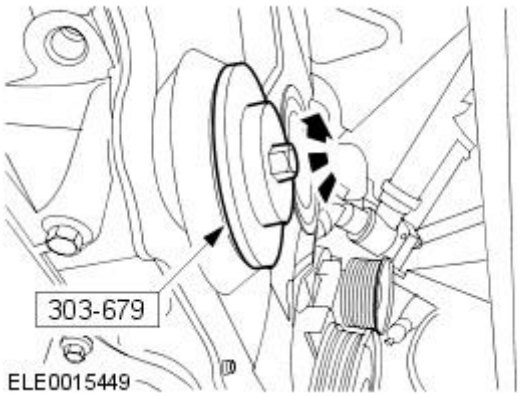

1. NOTE: Install a new crankshaft front oil seal.

• NOTE: A new crankshaft front oil seal is supplied with an alignment sleeve that will be pushed out during installation.

Using the special tool, install the crankshaft front oil seal.

- Tighten to 19 Nm.

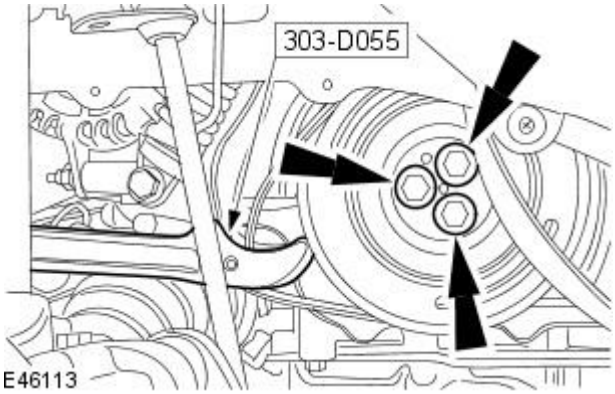

2. CAUTIONS:

Install new crankshaft pulley retaining bolts. Failure to follow this instruction many result in damage to the vehicle.

Tighten the new crankshaft pulley bolts in 2 stages. Failure to follow this instruction many result in damage to the vehicle.

Install the crankshaft pulley.

- Using the special tool, retain the crankshaft pulley.
- Stage 1: 45 Nm.
- Stage 2: 120 degrees.

3. Using the special tool, install the accessory drive belt.

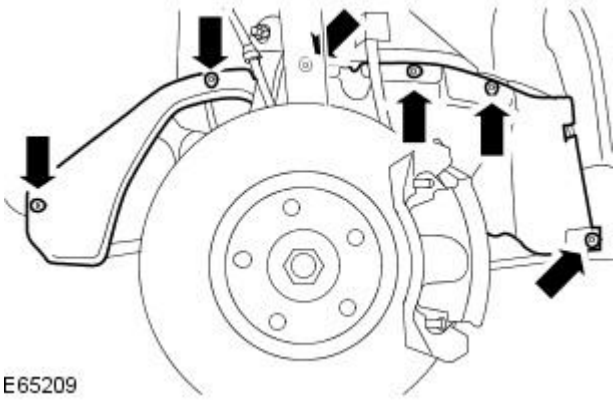

4. Install the right-hand wheel arch liner access panel.

5. Install the front road wheel and tire.
For additional information, refer to: Wheel and Tire (204-04 Wheels and Tires, Removal and Installation).

Engine - 2.0L Duratorq-TDCi / 2.2L Duratorq-TDCi (110kW / 150PS) - Puma - Crankshaft Rear Seal

In-vehicle Repair

Removal

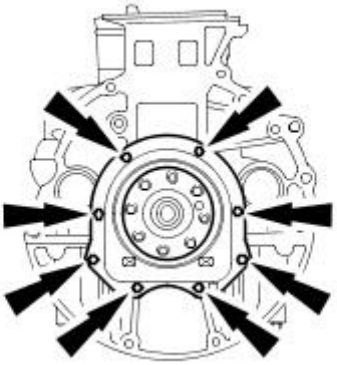
TIE0012994

1. Remove the flywheel.
   For additional information, refer to: Flywheel (303-01B Engine - 2.0L Duratorq-TDCi/2.2L Duratorq-TDCi (110kW/150PS) - Puma, In-vehicle Repair).
2. Remove the crankshaft rear seal.
   - Discard the crankshaft rear seal and the bolts.

Installation

CAUTION: A new crankshaft rear seal is supplied with an alignment sleeve that must not be removed until the crankshaft rear seal is fully installed. Failure to follow this instruction may result in damage to the vehicle.

• NOTE: Clean area on engine before installing a new crankshaft rear seal carrier.

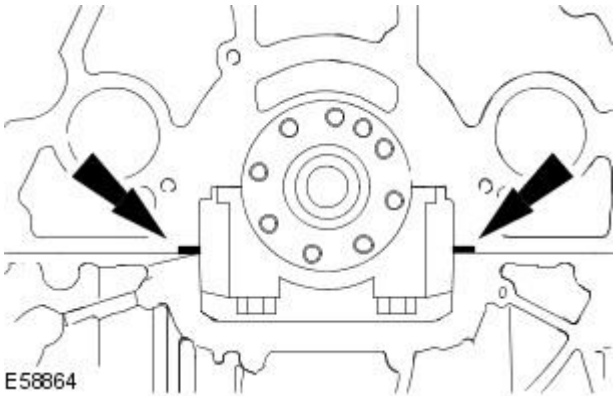
E58864

1. Check the two foam pads are located as shown on the ladder frame gasket.
   - If the ladder frame gasket tabs are present, trim using a suitable tool flush to the engine block and ladder frame.

     • NOTE: Make sure the sealant sits between the joints between the engine block and the ladder frame.
   - Apply a thin layer of sealant to the areas shown.

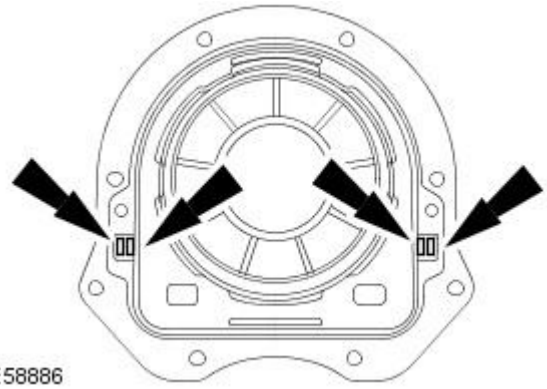
E58886

2. CAUTIONS:

   Install the new crankshaft rear seal within five minutes of applying the recommended sealant. Failure to follow this instruction may result in damage to the vehicle.

   Do not add any more than the specified quantity of sealant or add the sealant anywhere other than the area shown.

   Using the recommended sealant completely fill the square areas shown. For additional information, refer to: Specifications (303-01B Engine - 2.0L Duratorq-TDCi/2.2L Duratorq-TDCi (110kW/150PS) - Puma, Specifications).

3. NOTE: Do not fully tighten the crankshaft rear oil seal retaining bolts at this stage.

   Install the crankshaft rear oil seal.
   - Install the new retaining bolts.

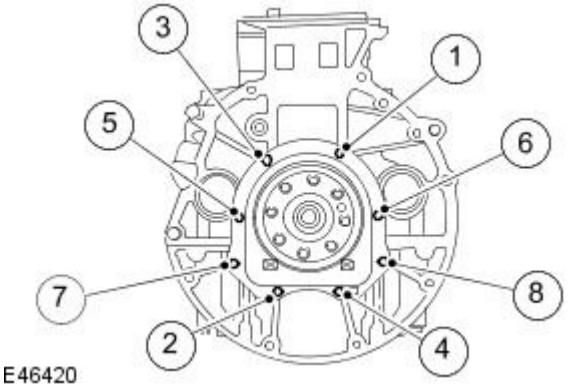

4. Tighten the crankshaft rear oil seal carrier retaining bolts.
   - Tighten the bolts in the sequence shown.
   - Tighten to 10 Nm.

5. Remove the crankshaft rear oil seal alignment sleeve.
6. Install the flywheel.
   For additional information, refer to: Flywheel (303-01B Engine - 2.0L Duratorq-TDCi/2.2L Duratorq-TDCi (110kW/150PS) - Puma, In-vehicle Repair).

Engine - 2.0L Duratorq-TDCi / 2.2L Duratorq-TDCi (110kW / 150PS) - Puma - Engine Front Cover

In-vehicle Repair

Special Tool(s)	
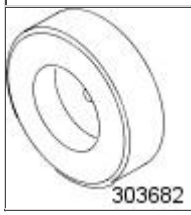 303682	Aligner, Front Cover 303-682 (21-241)

Removal

1. Remove the engine front mount.
   For additional information, refer to: Engine Front Mount (303-01B Engine - 2.0L Duratorq-TDCi/2.2L Duratorq-TDCi (110kW/150PS) - Puma, In-vehicle Repair).
2. Detach the engine wiring harness.

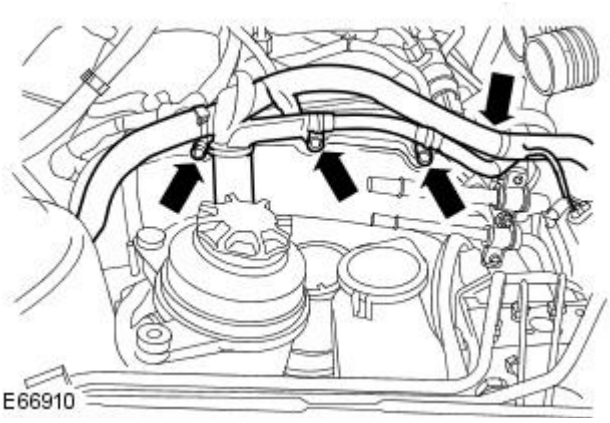

3. Detach the engine wiring harness.

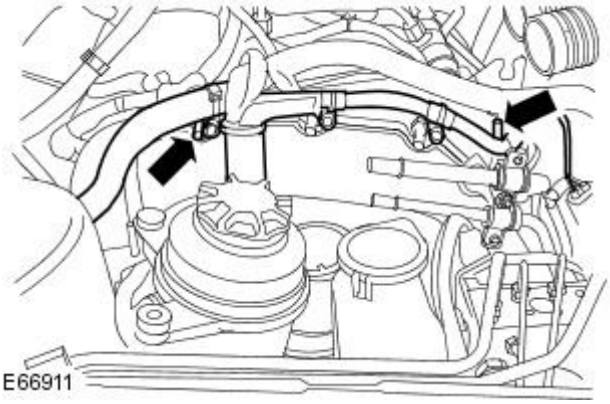

4. Remove the retaining bracket.
   1. Remove the retaining nuts.
   2. Remove the retaining bracket.

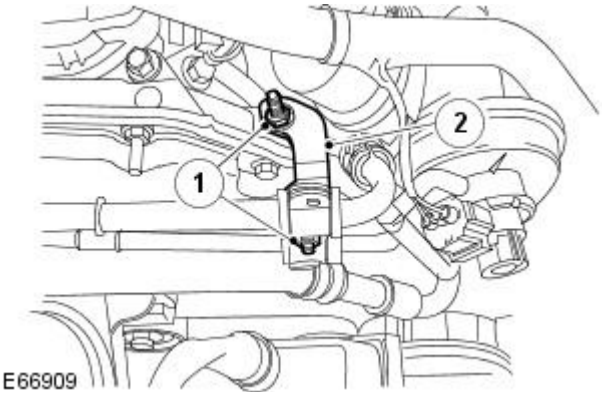

5. Remove the crankshaft front seal.
   For additional information, refer to: Crankshaft Front Seal (303-01B Engine - 2.0L Duratorq-TDCi/2.2L Duratorq-TDCi (110kW/150PS) - Puma, In-vehicle Repair).

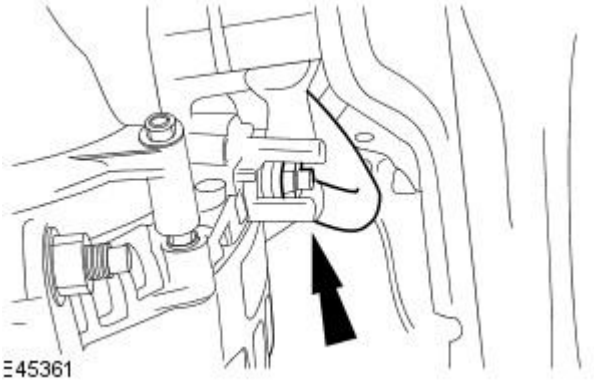

6. Detach the generator positive cable.

7. Disconnect the generator electrical connector.

8. Remove the generator upper retaining bolt.

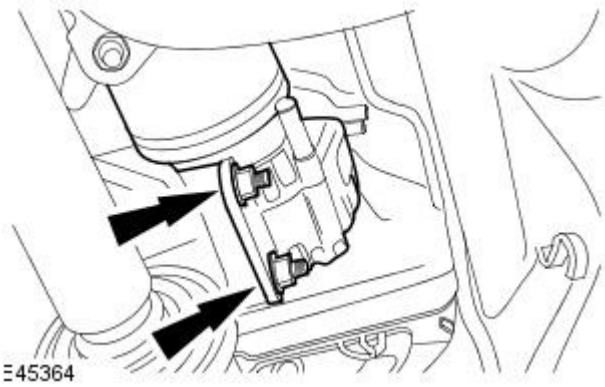

9. Detach the generator.

- Slide the generator rearwards as far away from the accessory drive belt tensioner assembly as possible.

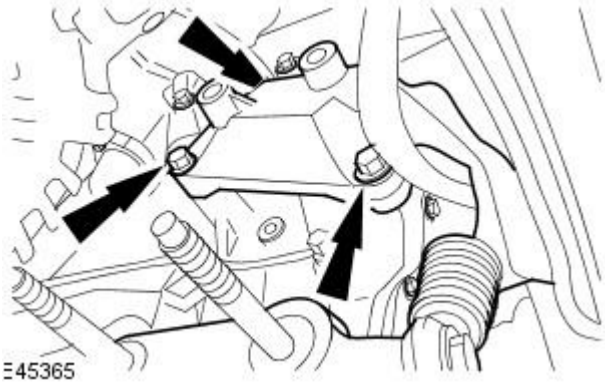

10. Detach the accessory drive belt tensioner assembly.

11. Detach the accessory drive belt.

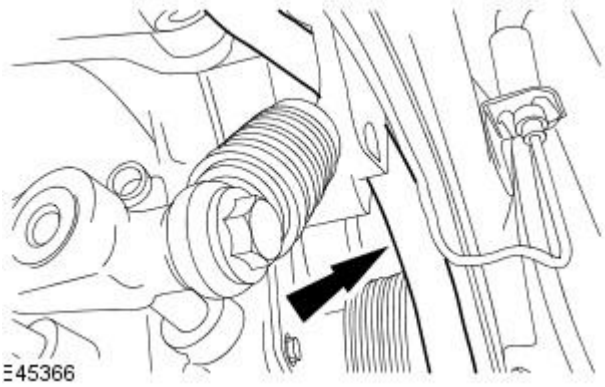

12. Remove the accessory drive belt tensioner.

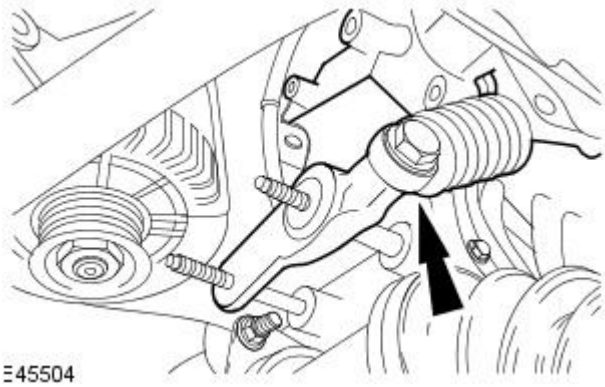

13. Remove the engine front cover lower retaining nuts and bolts.

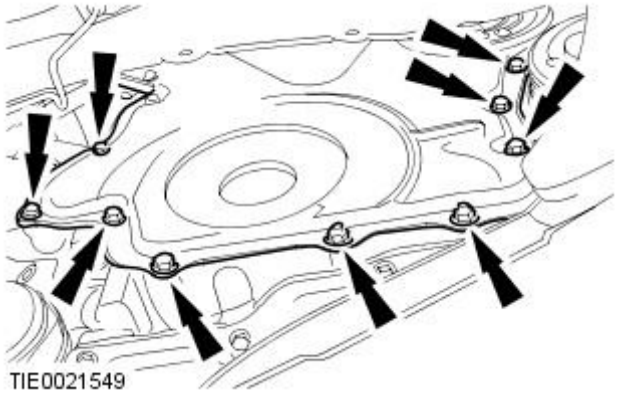

14. Lower the vehicle.

15. NOTE: Engine shown removed for clarity.

• NOTE: The idler pulley can not be removed until the engine mount bracket is removed.

Remove the idler pulley retaining nut.

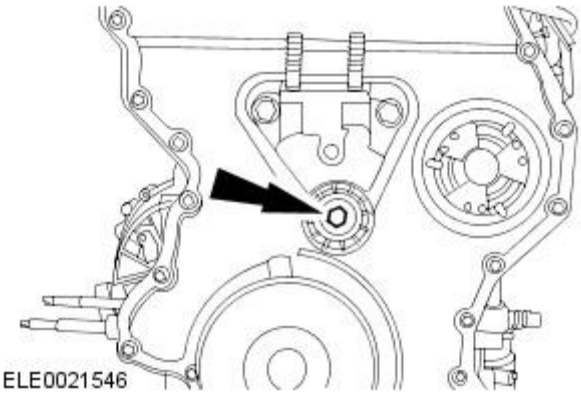

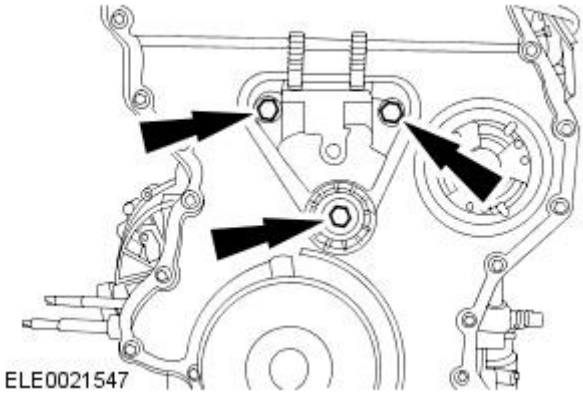

16. NOTE: Engine shown removed for clarity.

Remove the front engine mount bracket and idler pulley.

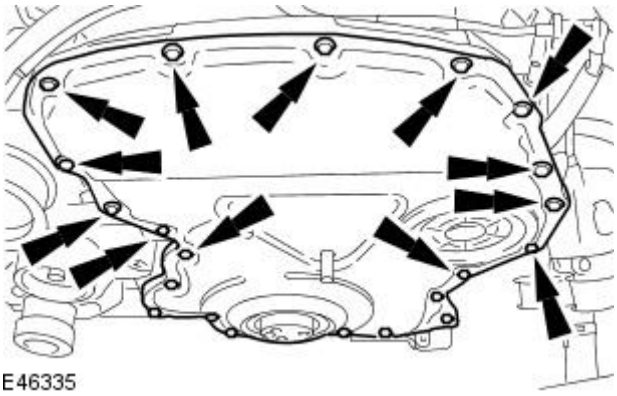

17. NOTE: Engine shown removed for clarity.

Remove the engine front cover upper retaining bolts.

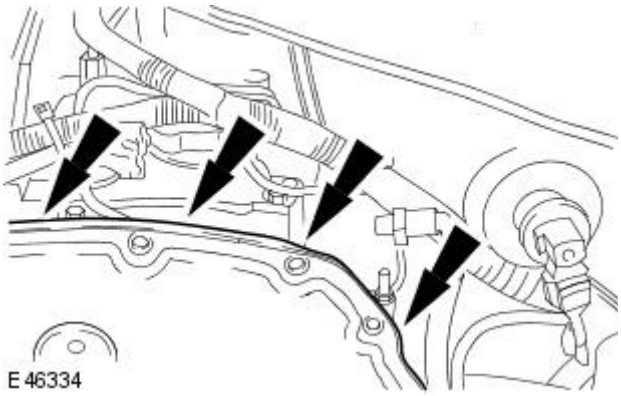

18. CAUTION: Avoid damage to the engine front cover mating face on the engine. Failure to follow this instruction may result in damage to the vehicle.

• NOTE: Lubricate the suitable tool with clean engine oil.

Using a suitable tool, remove and discard the engine front cover.

- Insert the suitable tool between the front cover and the engine, slide the suitable tool in between the engine and engine front cover.

Installation

1. Clean the engine front cover mating faces.

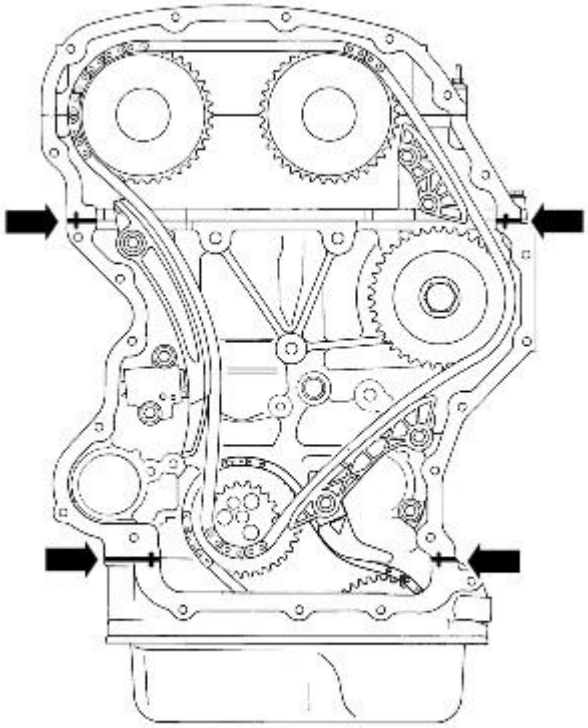

E100334

2. CAUTIONS:

A new engine front cover must be installed. Failure to follow this instruction may result in damage to the vehicle.

Install the engine front cover within five minutes of applying the sealer. Failure to follow this instruction may result in damage to the vehicle.

Apply a 3 mm (0.118 inch) bead of sealer to the four T-joints.

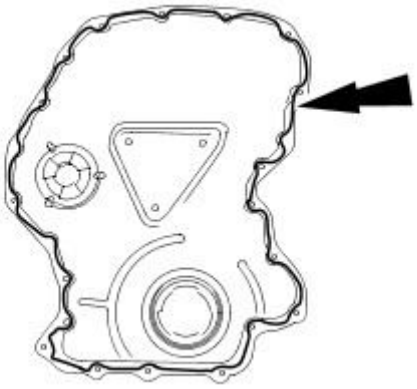

TIE0020780

3. Apply a 3 mm (0.118 inch) bead of selaer to the engine front cover.

4. WARNING: Make sure that the engine front cover does not come into contact with the engine until correct position is obtained.

With the aid of a second technician, position the engine front cover.

5. Raise the vehicle.

6. NOTE: Engine shown removed for clarity.

Using the special tool, align the engine front cover.

- Intall and tighten 2 engine front cover bolts to 6 Nm.
- Install and tighten the remaining 16 engine front cover bolts and 2 nuts to 6 Nm.
- Slacken the engine front cover bolts and nuts 360 degrees.
- Install the special tool.

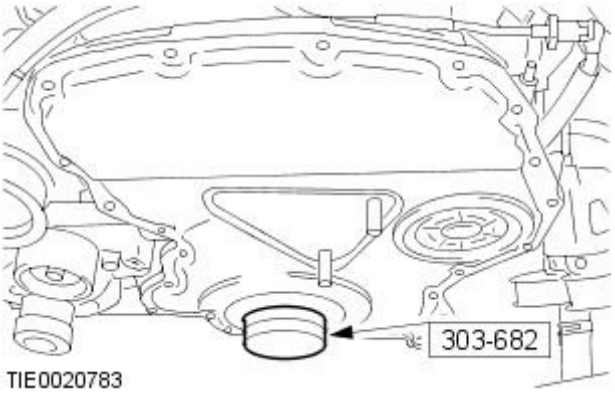

TIE0020783

7. Tighten the engine front cover lower retaining nuts and bolts.

- Tighten the engine front cover nuts and bolts to 3 Nm.
- Tighten the engine front cover nuts and bolts in the following sequence:
- Tighten the 2 bolts indicated to 11 Nm.
- Tighten the remaining nuts and bolts to 10 Nm.

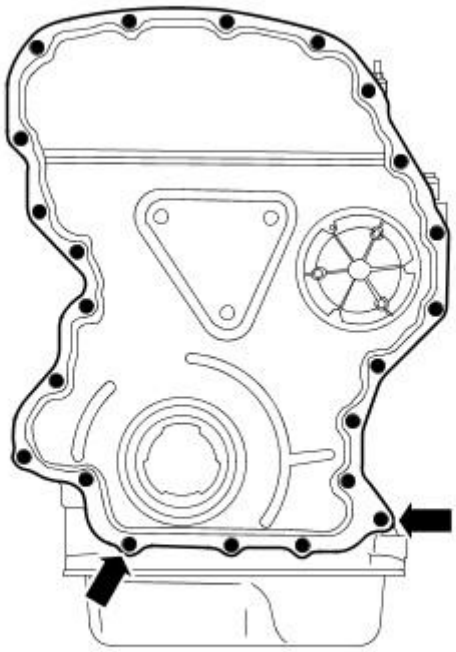

E100335

8. NOTE: Engine shown removed for clarity.

Remove the special tool.

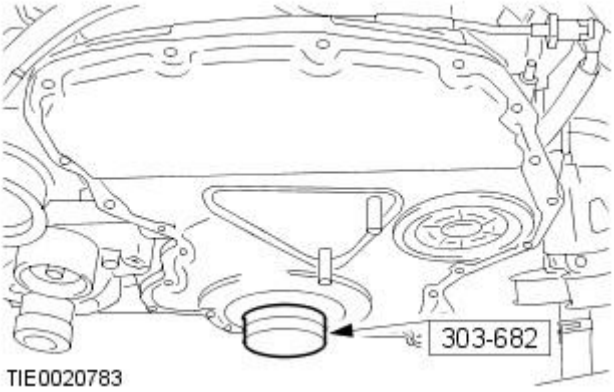

TIE0020783

9. NOTE: Engine shown removed for clarity.

• NOTE: Install the engine front mount bracket, the idler pulley and bolts as one item.

Install the front engine mount bracket and idler pulley.

- Tighten to 80 Nm.

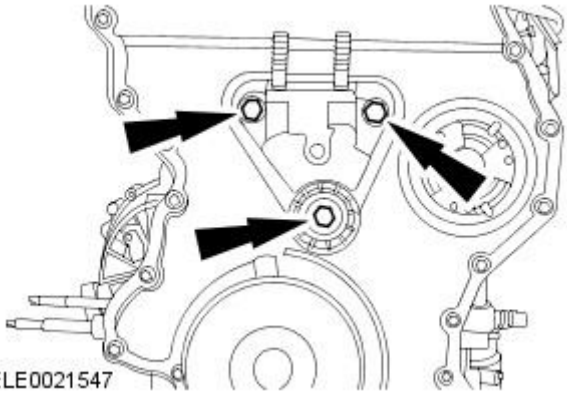

ELE0021547

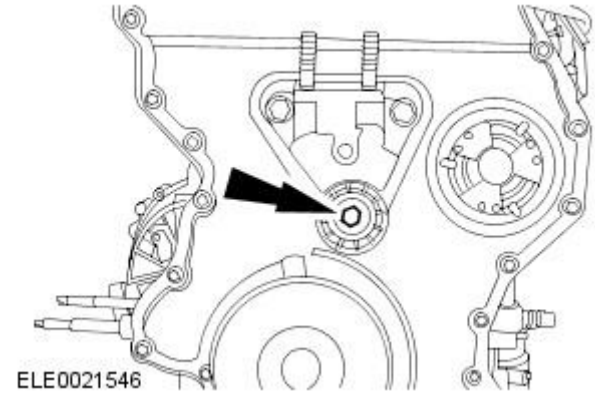

10. NOTE: Engine shown removed for clarity.

Install the idler pulley retaining nut.

- Tighten to 43 Nm.

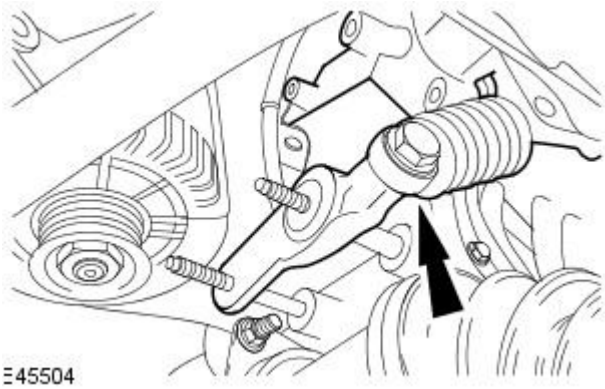

11. Install the accessory drive belt tensioner.

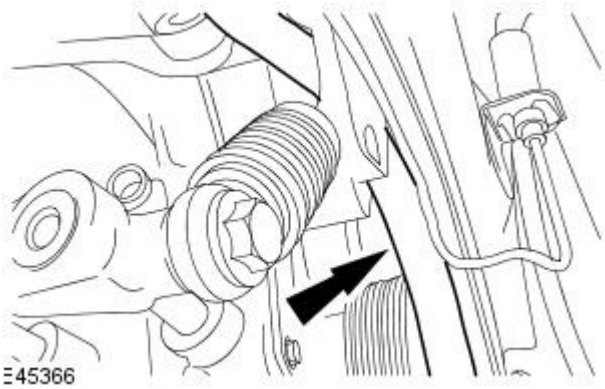

12. Attach the accessory drive belt.

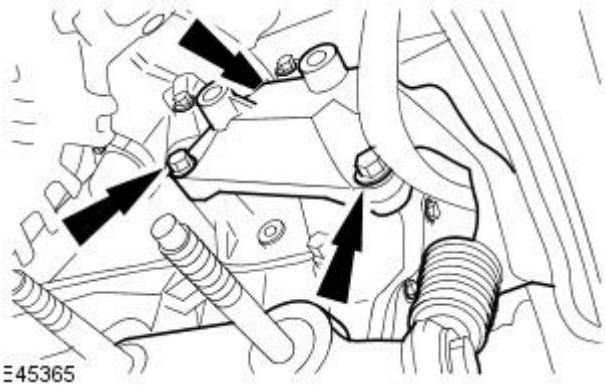

13. Attach the accessory drive belt tensioner assembly.

- Tighten to 47 Nm.

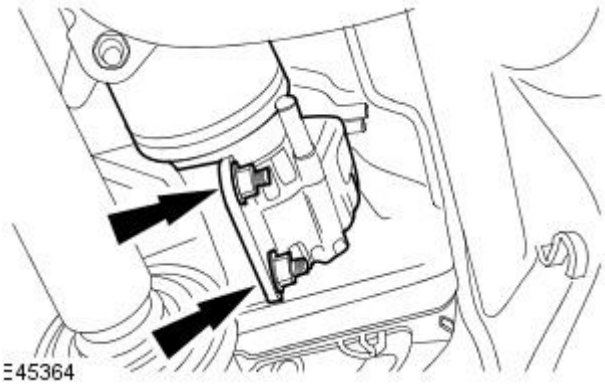

14. NOTE: Do not tighten the generator retaining nuts at this stage.

Attach the generator.

15. Install the generator upper retaining bolt.

- Tighten to 47 Nm.

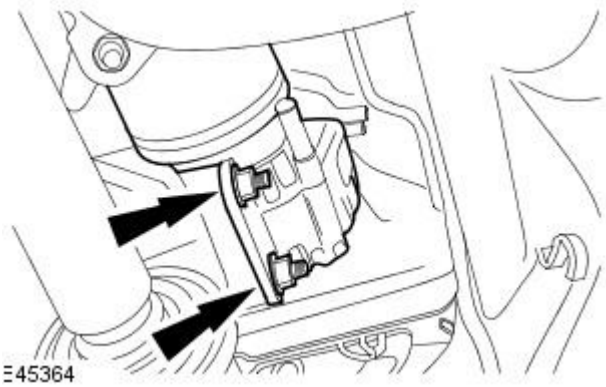

16. Tighten to 47 Nm.

17. Connect the generator electrical connector.

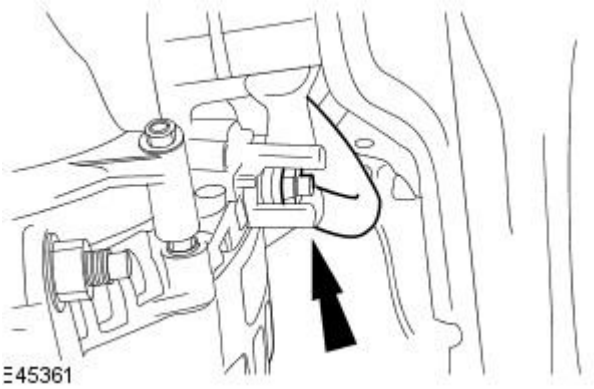

18. Attach the generator positive cable.

- Tighten to 8 Nm.

19. Install the crankshaft front seal.
For additional information, refer to: Crankshaft Front Seal (303-01B Engine - 2.0L Duratorq-TDCi/2.2L Duratorq-TDCi (110kW/150PS) - Puma, In-vehicle Repair).

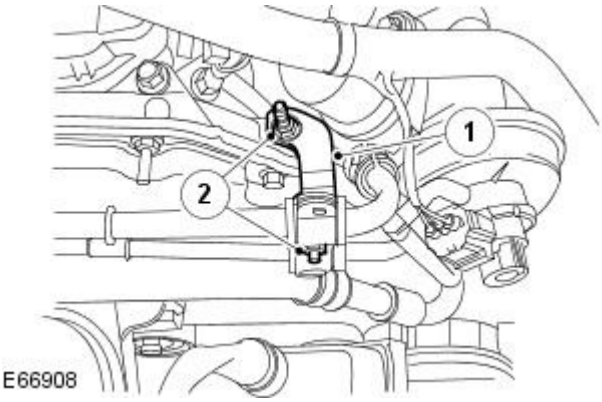

20. Install the retaining nuts.

1. Install the retaining bracket.
2. Install the retaining nuts.

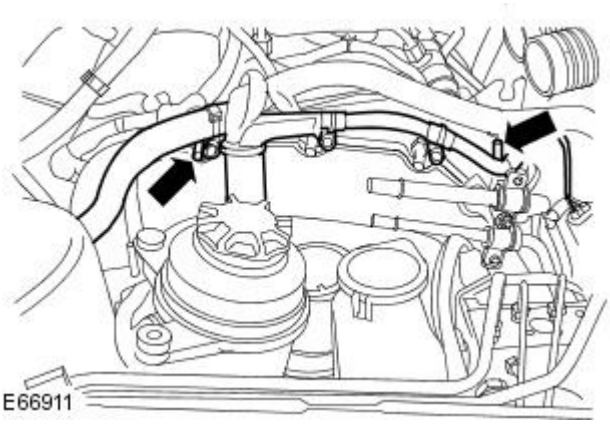

21. Attach the engine wiring harness.

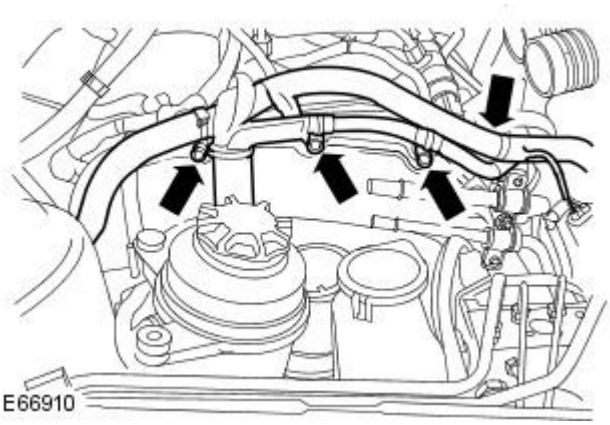

22. Attach the engine wiring harness.

23. Install the engine front mount.
For additional information, refer to: Engine Front Mount (303-01B Engine - 2.0L Duratorq-TDCi/2.2L Duratorq-TDCi (110kW/150PS) - Puma, In-vehicle Repair).

Engine - 2.0L Duratorq-TDCi / 2.2L Duratorq-TDCi (110kW / 150PS) - Puma - Engine Front Mount

In-vehicle Repair

Special Tool(s)	
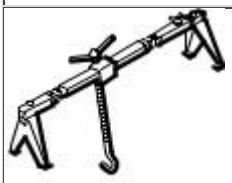 303-021	Engine support bracket 303-021
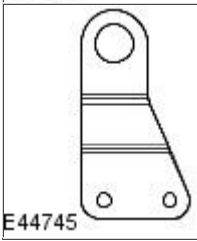 E44745	Engine lifting eye 303-1067

Removal

All vehicles

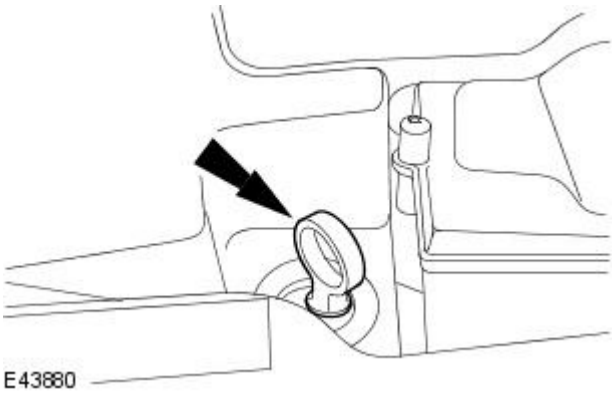
E43880

1. Remove the oil level indicator.

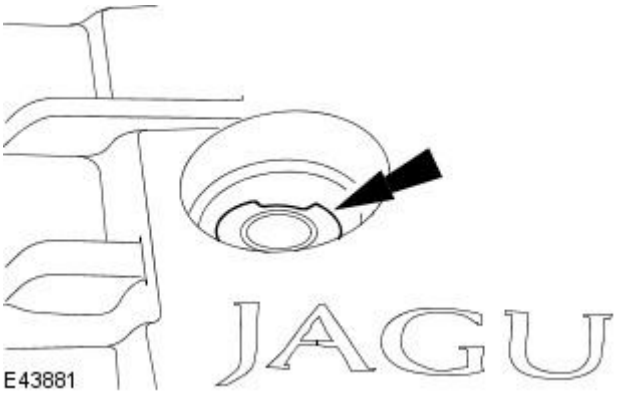
E43881

2. Remove the oil filler cap.

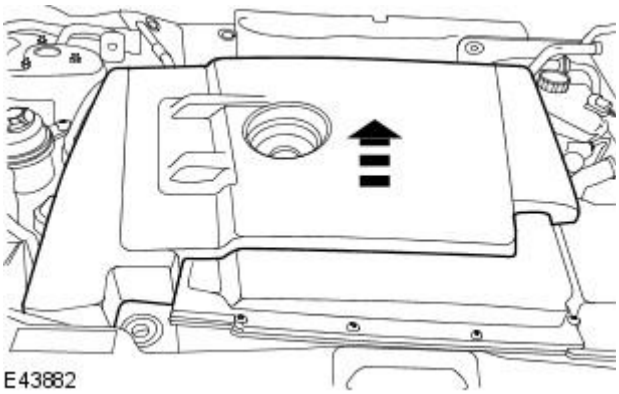
E43882

3. NOTE: Install the oil filler cap and oil level indicator to prevent foreign material entering the valve cover.

Remove the engine cover.

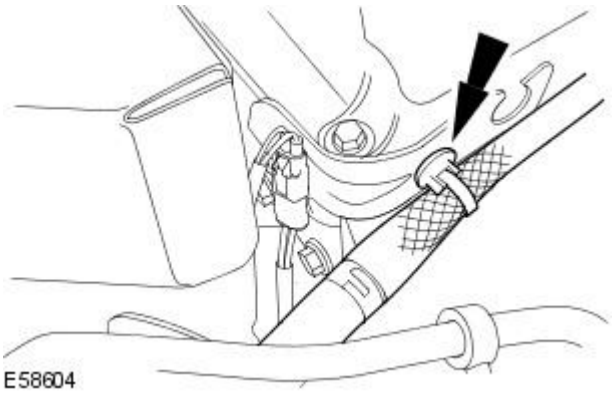

4. Detach the wiring harness from the engine cover mounting bracket.

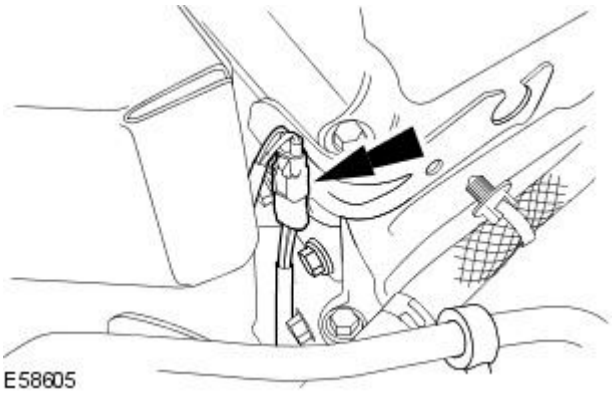

5. Detach the electrical connector from the engine cover mounting bracket.

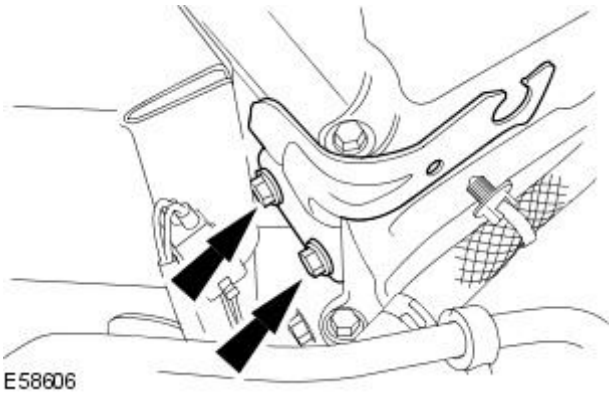

6. Remove the engine cover mounting bracket.

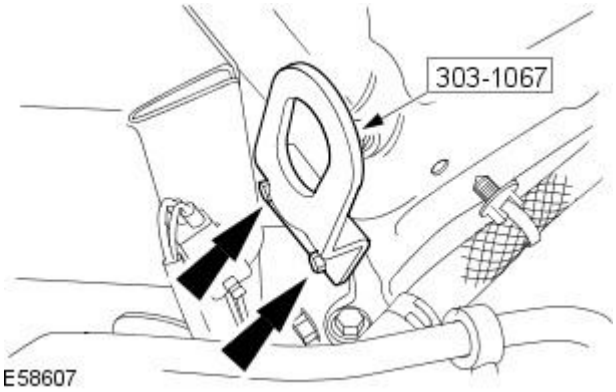

7. Install the special tool.

- Tighten to 23 Nm.

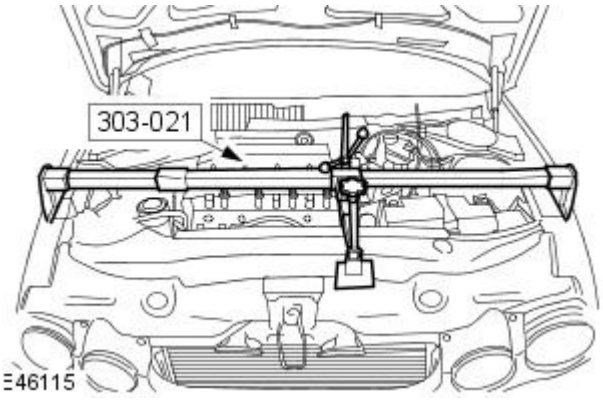

8. Using the special tool, support the engine and transmission assembly.

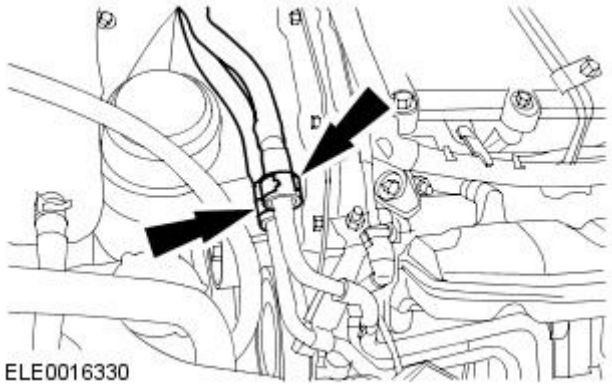

9. Disconnect the fuel pump fuel supply and return lines.
For additional information, refer to: Quick Release Coupling - Push Connect (310-00 Fuel System - General Information, General Procedures).

- Install blanking plugs to the fuel pump fuel supply and return line male and female connectors.

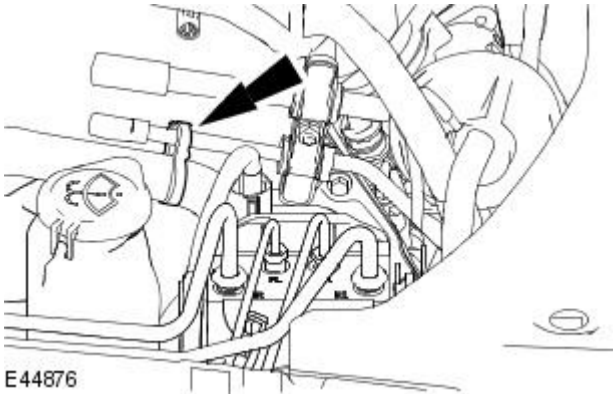

10. Detach the power steering fluid hose from the fuel return line.

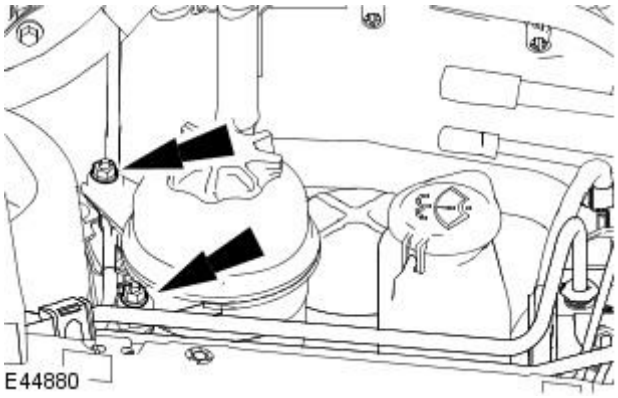

11. Remove the power steering fluid reservoir retaining nuts.

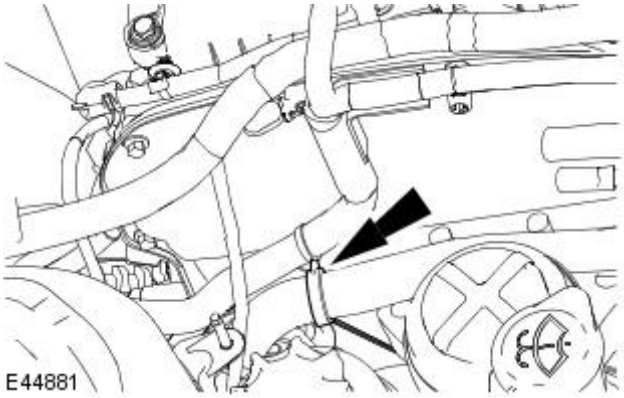

12. Detach the power steering fluid reservoir.

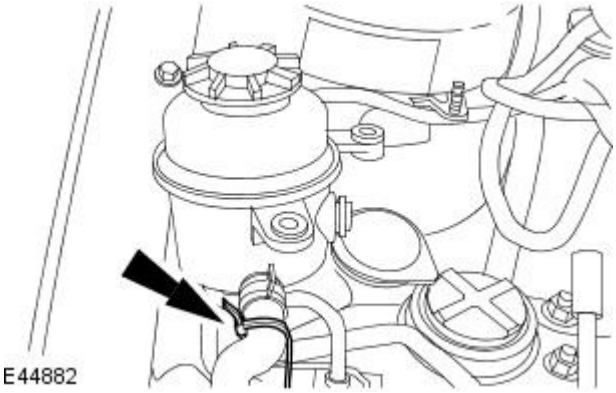

13. Secure the power steering fluid reservoir to one side.

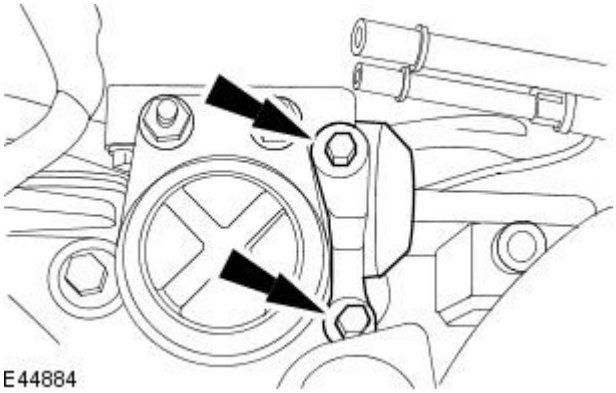

14. Remove the engine mount damper.

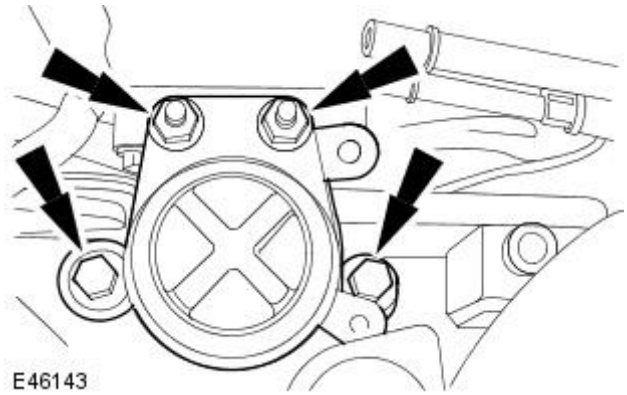

15. NOTE: Mark the position of the engine mount before removal.

Remove the engine mount and bracket assembly.

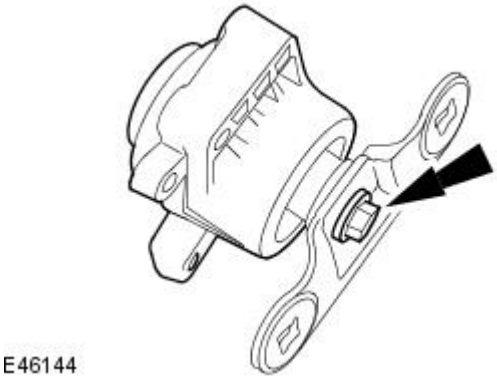

16. Remove the engine mount.

Vehicles built from VIN:E43869

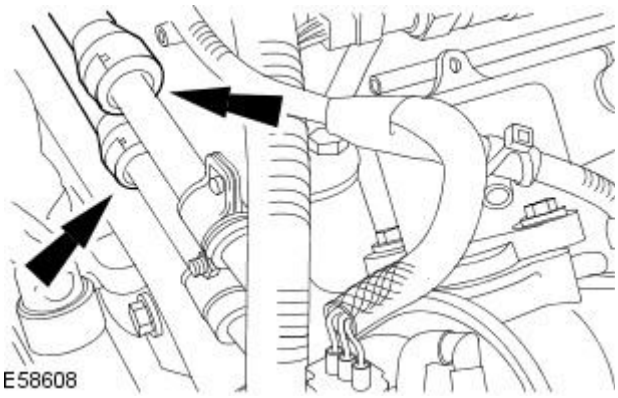

17. Disconnect the fuel pump fuel supply and return lines.
For additional information, refer to: Quick Release Coupling - Push Connect (310-00 Fuel System - General Information, General Procedures).

- Install blanking plugs to the fuel pump fuel supply and return line male and female connectors.

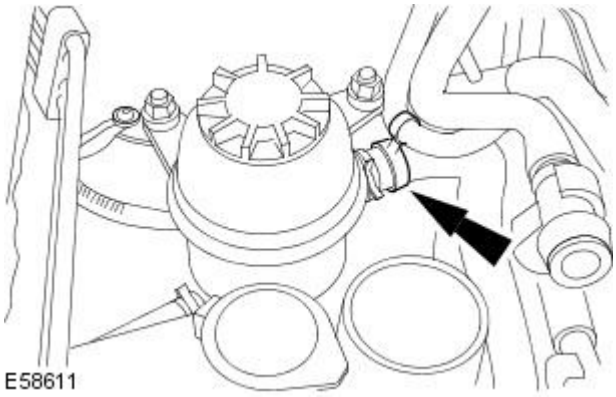

18. Detach the power steering fluid hose from the fuel return line.

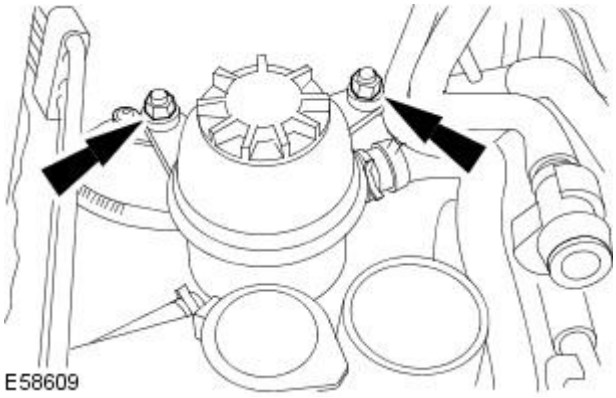

19. Remove the power steering fluid reservoir retaining nuts.

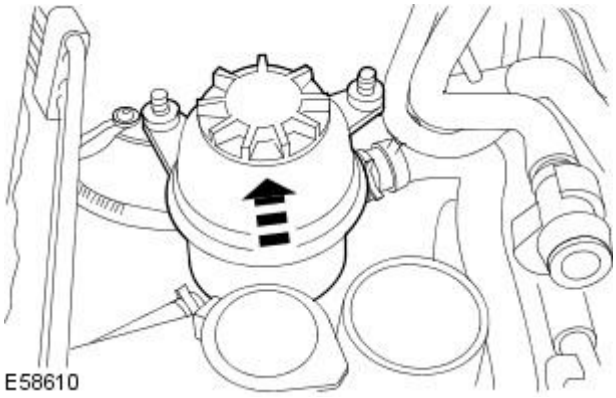

20. Detach the power steering reservoir away from the power steering reservoir retaining bracket.

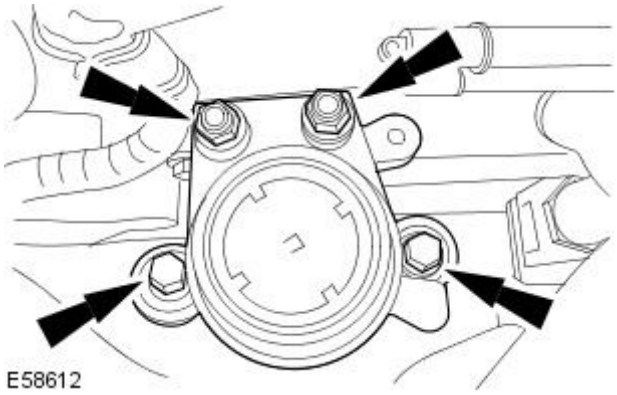

21. NOTE: Mark the position of the engine mount before removal.

Remove the engine mount and bracket assembly.

22. Remove the engine mount.

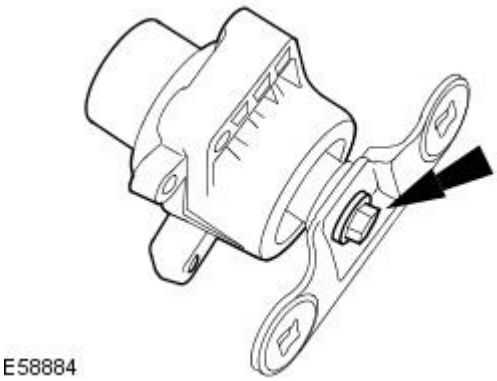

Installation

Vehicles built from VIN:E43869

1. NOTE: Clean the front engine mount mating faces.

To install, reverse the removal procedure.

- Tighten to 80 Nm.

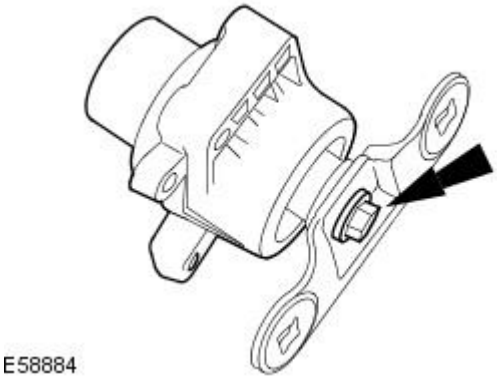

2. Tighten to 80 Nm.

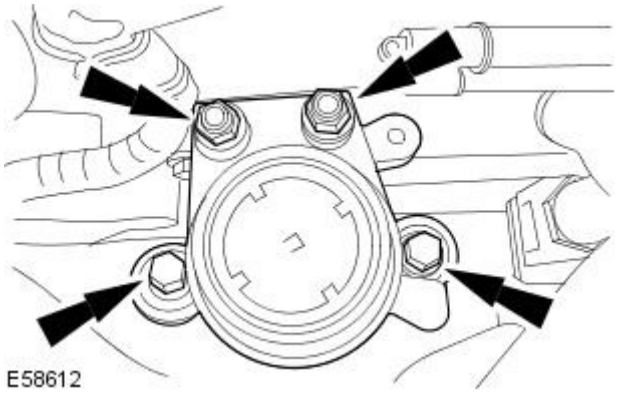

3. Tighten to 10 Nm.

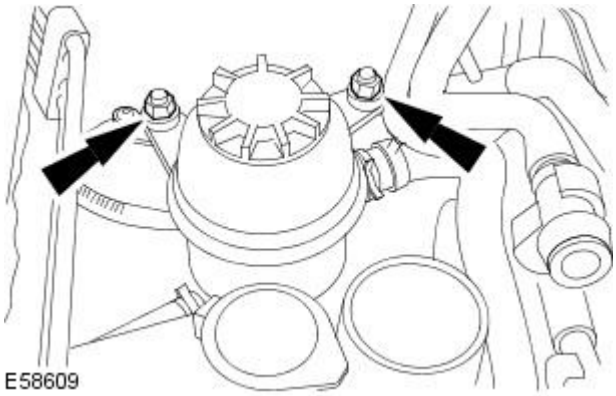

Vehicles built up to VIN:E43868

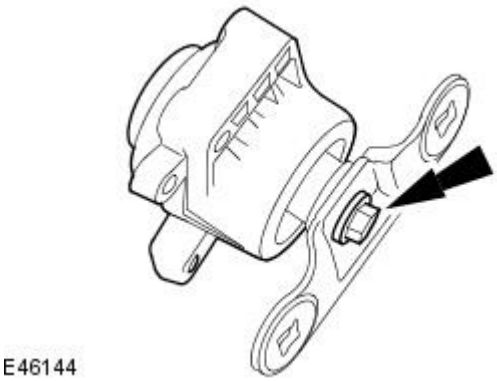

4. NOTE: Clean the front engine mount mating faces.

To install, reverse the removal procedure.

- Tighten to 80 Nm.

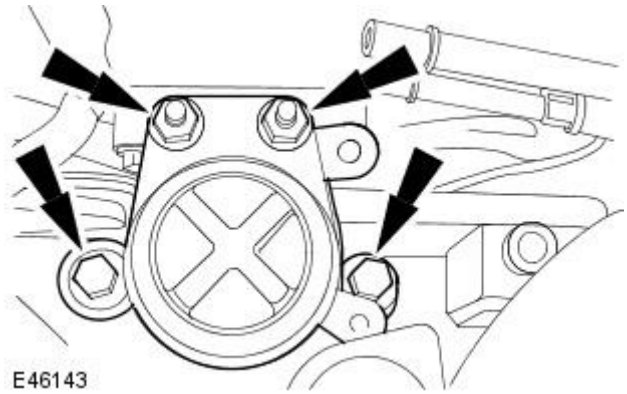

5. Tighten to 80 Nm.

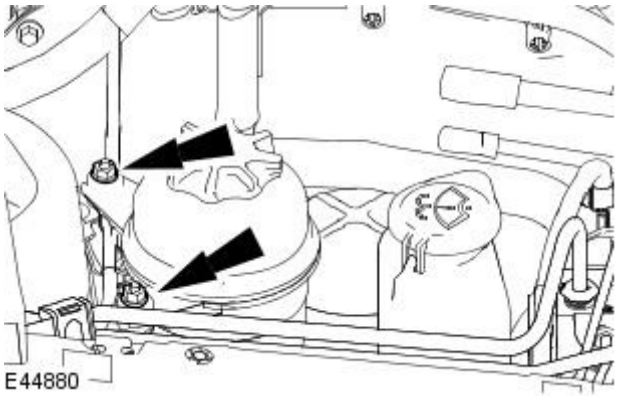

6. Tighten to 10 Nm.

All vehicles

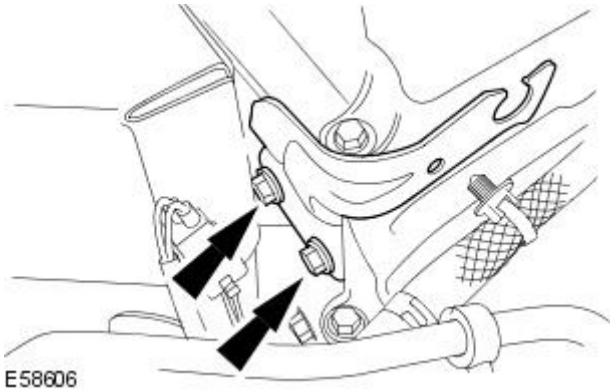

7. Tighten to 23 Nm.

Engine - 2.0L Duratorq-TDCi / 2.2L Duratorq-TDCi (110kW / 150PS) - Puma - Flexplate

In-vehicle Repair

Removal

1. Disconnect the battery ground cable.
   For additional information, refer to: Battery Disconnect and Connect (414-01 Battery, Mounting and Cables, General Procedures).
2. Raise and support the vehicle.
3. Remove the transmission.
   For additional information, refer to: Transmission (307-01B Automatic Transmission/Transaxle - Vehicles With: 6-Speed Automatic Transaxle - AWF21, Removal).

E100904

4. CAUTION: Discard the bolts.

• NOTE: Some variation in the illustrations may occur, but the essential information is always correct.

Remove the flexplate.

- Remove the 8 bolts.

Installation

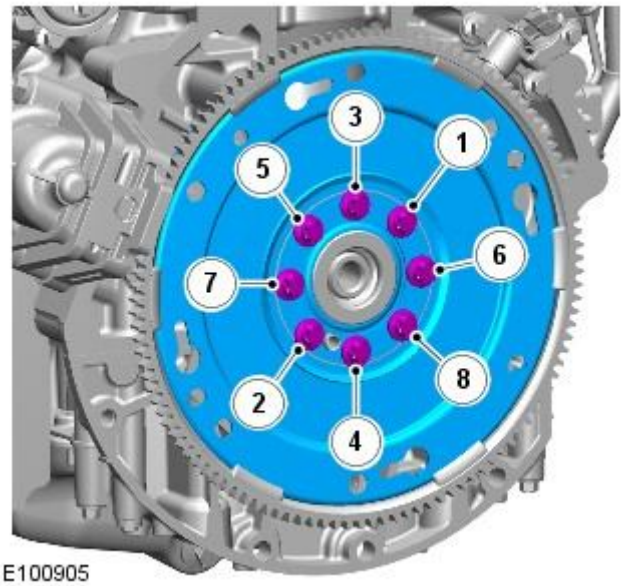

E100905

1. CAUTION: Make sure that new bolts are installed.

• NOTE: Some variation in the illustrations may occur, but the essential information is always correct.

Install the flexplate.

- Stage 1: Tighten bolts in the sequence shown to 25 Nm.
- Stage 2: Tighten bolts in the sequence shown to 40 Nm.
- Stage 3: Tighten bolts in the sequence shown a further 48 degrees.

2. Install the transmission.
   For additional information, refer to: Transmission (307-01B Automatic Transmission/Transaxle - Vehicles With: 6-Speed Automatic Transaxle - AWF21, Removal).
3. Connect the battery ground cable.
   For additional information, refer to: Battery Disconnect and Connect (414-01 Battery, Mounting and Cables, General Procedures).

Engine - 2.0L Duratorq-TDCi / 2.2L Duratorq-TDCi (110kW / 150PS) - Puma - Flywheel

In-vehicle Repair

Removal

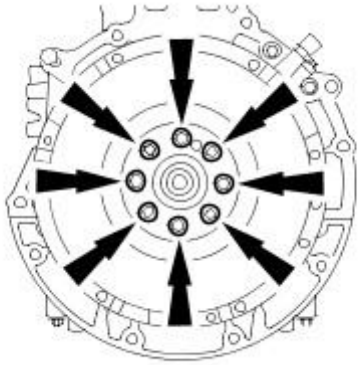

TIE0012992

1. Remove the clutch disc and pressure plate. For additional information, refer to: Clutch Disc and Pressure Plate (308-01 Clutch, Removal and Installation).
2. Remove the flywheel.
   - Discard the bolts.

Installation

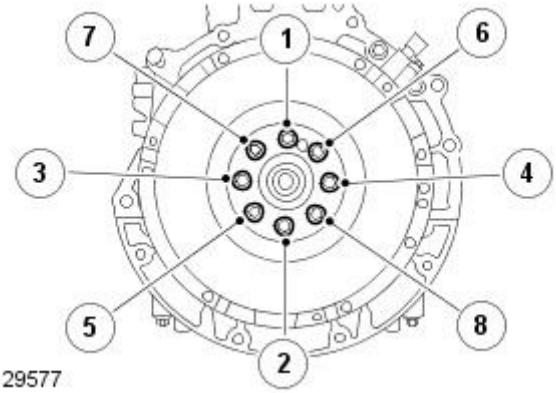

E129577

1. NOTE: Install new flywheel bolts.

   Install the flywheel.
   - Tighten the bolts in the sequence shown in three stages.
   - Stage 1: Tighten bolts 1 through 8 to 15 Nm.
   - Stage 2: Tighten bolts 1 through 8 to 30 Nm.
   - Stage 3: Tighten bolts 1 through 8 to 75 Nm.
   - Stage 4: Tighten bolts 1 through 8 to 45 degrees.
2. Install the clutch disc and pressure plate. For additional information, refer to: Clutch Disc and Pressure Plate (308-01 Clutch, Removal and Installation).

Engine - 2.0L Duratorq-TDCi / 2.2L Duratorq-TDCi (110kW / 150PS) - Puma - Intake Manifold

In-vehicle Repair

Removal

1. Remove the air cleaner assembly.
   For additional information, refer to: Air Cleaner (303-12B Intake Air Distribution and Filtering - 2.0L Duratorq-TDCi/2.2L Duratorq-TDCi (110kW/150PS) - Puma, Removal and Installation).
2. Detach the engine wiring harness.

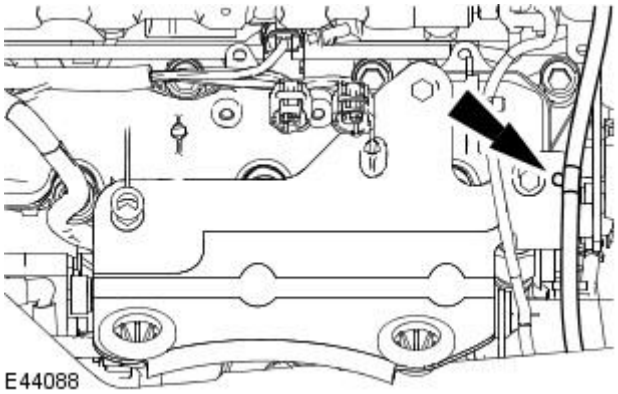

3. Remove the air cleaner mount bracket.

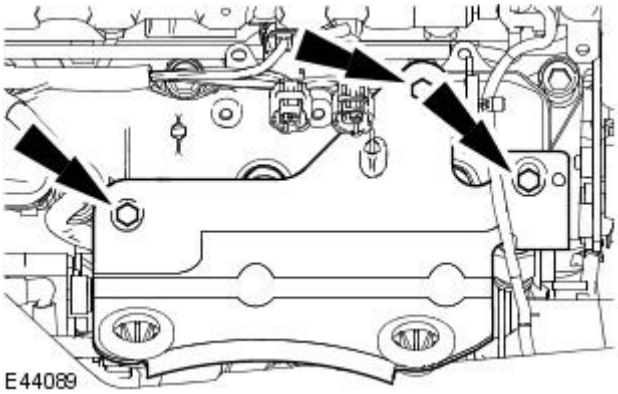

4. Detach the exhaust gas recirculation (EGR) valve from the intake manifold.
   - Remove and discard the EGR valve gasket.

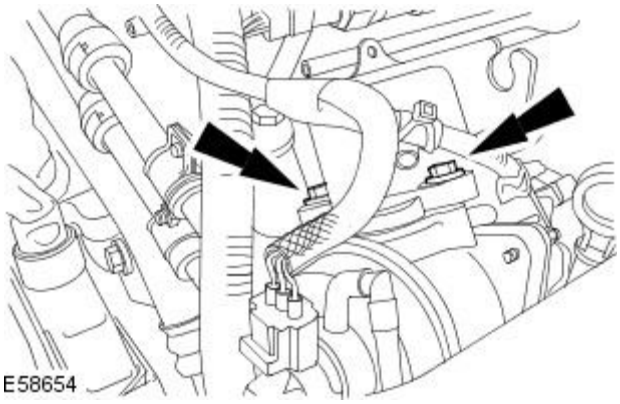

5. Detach the engine wiring harness from the intake manifold.

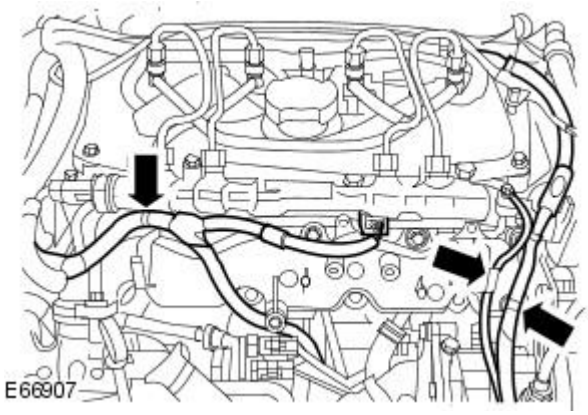

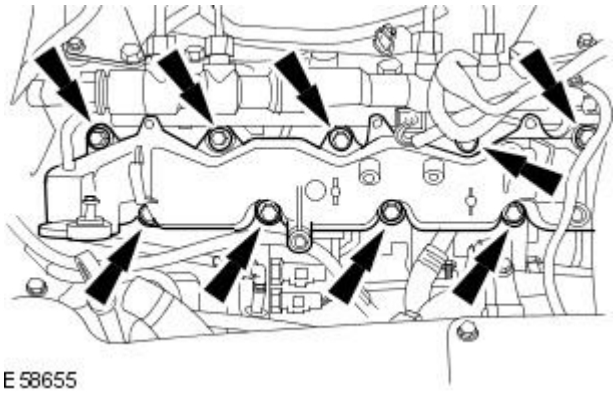

6. Remove the intake manifold.

- Remove and discard the intake manifold gaskets.

Installation

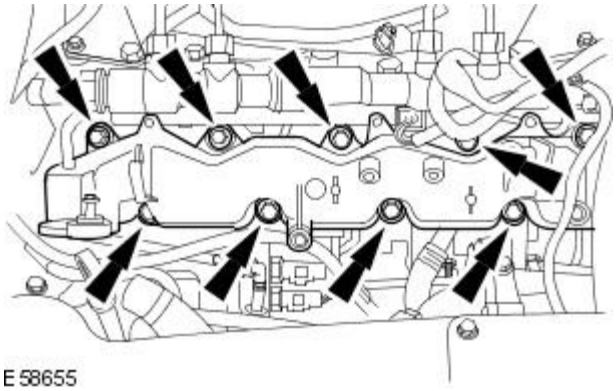

1. NOTE: Install new intake manifold gaskets.

To install, reverse the removal procedure.

- Tighten to 15 Nm.

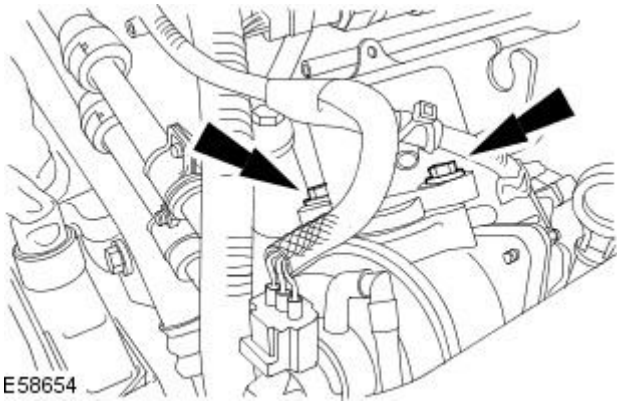

2. NOTE: Install a new EGR valve gasket.

Tighten to 10 Nm.

Engine - 2.0L Duratorq-TDCi / 2.2L Duratorq-TDCi (110kW / 150PS) - Puma - Oil Pan

In-vehicle Repair

Removal

All vehicles

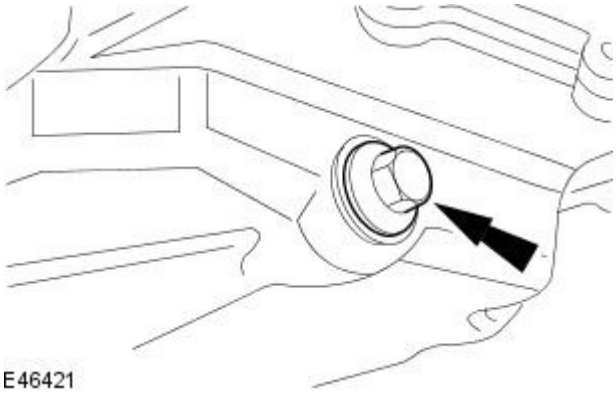

1. Remove the air deflector.
   For additional information, refer to: Air Deflector - 2.2L Diesel/2.0L Diesel (501-02 Front End Body Panels, Removal and Installation).
2. Drain the engine oil.
3. NOTE: Install a new drain plug seal.

   Install the drain plug.

   - Tighten to 23 Nm.

Vehicles with 2.2L diesel engine

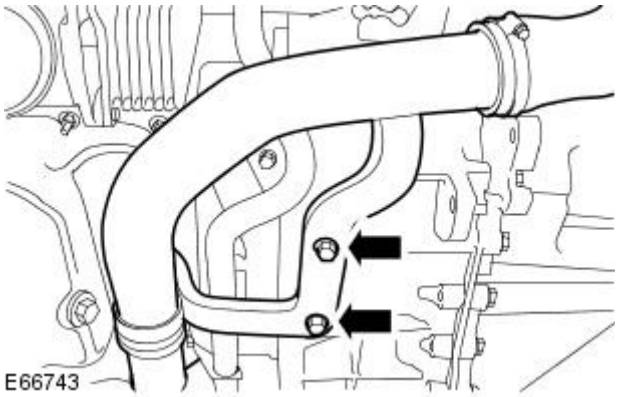

4. Remove the charge air cooler intake pipe retaining bolts.
   - Reposition the charge air cooler intake pipe for access.

All vehicles

5. Remove the oil pan retaining bolts.

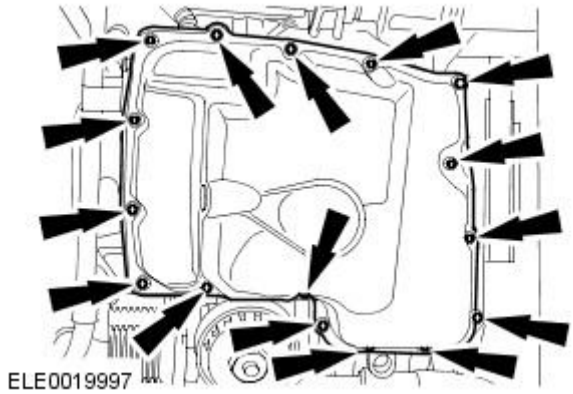

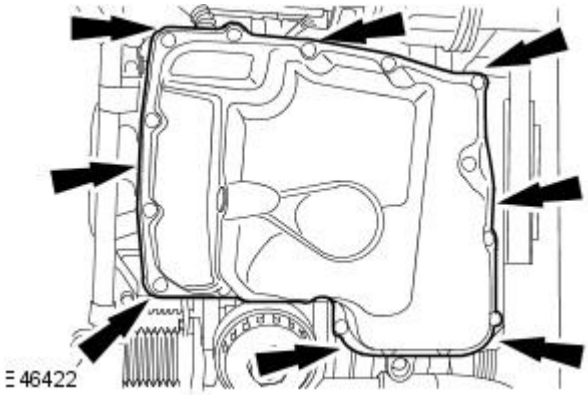

6. CAUTIONS:

   A new oil pan must be installed. Failure to follow this instruction may cause damage to the vehicle.

   Avoid damage to the oil pan mating face of the engine. Failure to follow this instruction may cause damage to the vehicle.

   • NOTE: Lubricate the suitable tool with clean engine oil.

   Using a suitable tool remove and discard the oil pan.

   - Insert the suitable tool between the oil pan and the engine, slide the suitable tool in between the engine and oil pan.

Installation

All vehicles

1. CAUTION: Avoid damage to the oil pan mating face of the cylinder block. Failure to follow this instruction may cause damage to the vehicle.

Clean the cylinder block mating faces.

2. CAUTIONS:

A new oil pan must be installed. Failure to follow this instruction may cause damage to the vehicle.

Install the oil pan within five minutes of applying the sealer. Failure to follow this instruction may cause damage to the vehicle.

Apply a 3 mm bead of sealer WSE-M4G323-A4 to the oil pan.

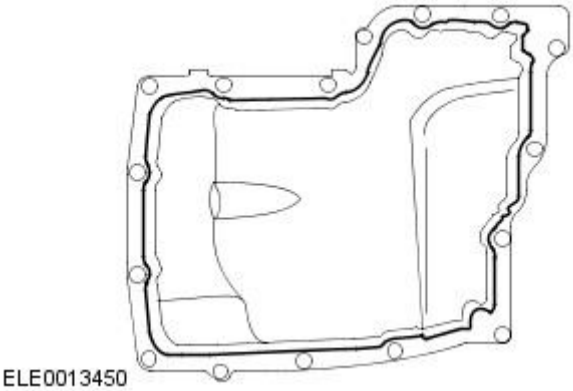

3. NOTE: Do not fully tighten the oil pan retaining bolts at this stage.

Install the oil pan.

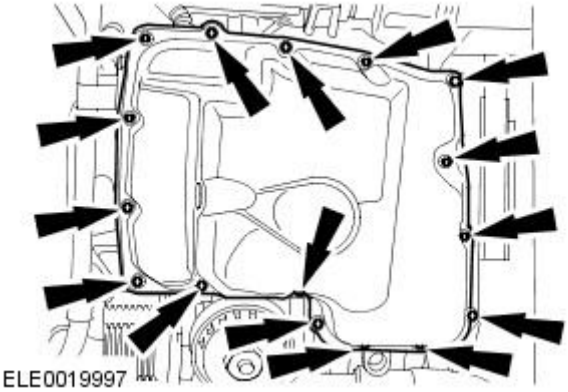

4. Tighten the oil pan retaining bolts.

- Tighten the bolts in the sequence shown in two stages.
- Stage 1: Tighten bolts 1 through 16 to 7 Nm.
- Stage 2: Tighten bolts 1 through 16 to 14 Nm.

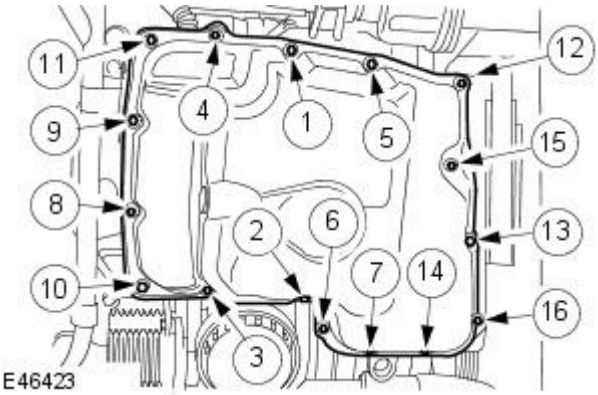

Vehicles with 2.2L diesel engine

5. Reposition the charge air cooler pipe.

- Install the charge air cooler pipe retaining bolts.
- Tighten to 35 Nm.

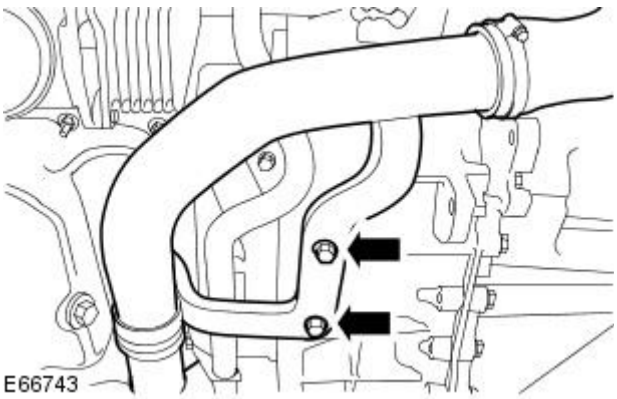

All vehicles

6. Install the air deflector.

For additional information, refer to: Air Deflector - 2.2L Diesel/2.0L Diesel (501-02 Front End Body Panels, Removal and Installation).

7. Lower the vehicle.

8. Fill the engine with engine oil.

Engine - 2.0L Duratorq-TDCi / 2.2L Duratorq-TDCi (110kW / 150PS) - Puma - Timing Chain

In-vehicle Repair

Special Tool(s)	
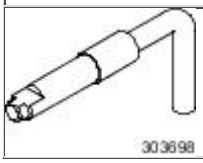	Timing Tool, Crankshaft 303-698 (21-251)

Removal

1. Remove the engine front cover.
   For additional information, refer to: Engine Front Cover (303-01B Engine - 2.0L Duratorq-TDCi/2.2L Duratorq-TDCi (110kW/150PS) - Puma, In-vehicle Repair).
2. Remove the air cleaner outlet pipe.
   For additional information, refer to: Air Cleaner Outlet Pipe (303-12B Intake Air Distribution and Filtering - 2.0L Duratorq-TDCi/2.2L Duratorq-TDCi (110kW/150PS) - Puma, Removal and Installation).
3. Remove the crankshaft position (CKP) sensor.
   For additional information, refer to: Crankshaft Position (CKP) Sensor (303-14B Electronic Engine Controls - 2.0L Duratorq-TDCi/2.2L Duratorq-TDCi (110kW/150PS) - Puma, Removal and Installation).

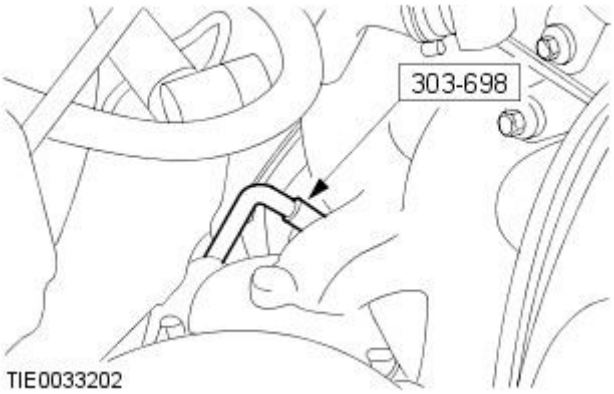

4. CAUTION: Do not turn the crankshaft when the special tool is fully located into the flywheel. Failure to follow this instruction will cause damage to the CKP sensor hole.

• NOTE: Make sure the crankshaft is only rotated in the normal direction of rotation.

   Turn the crankshaft to 50 degrees before top dead center (BTDC) and insert the special tool through the CKP sensor hole.

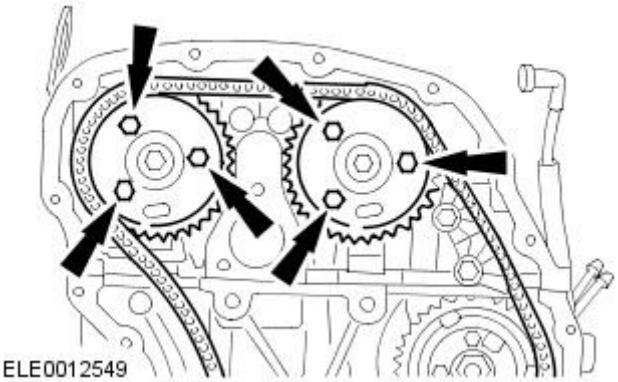

5. Loosen the camshaft sprocket retaining bolts.

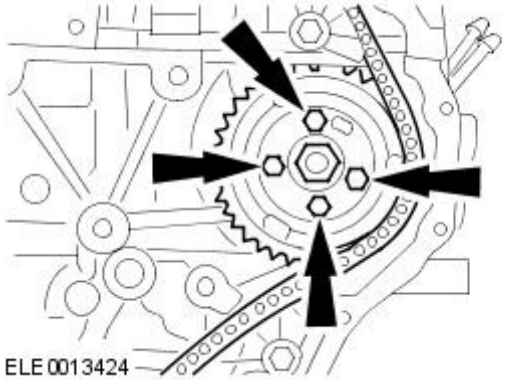

6. Loosen the fuel injection pump sprocket retaining bolts.

7. Using suitable 6 mm bar, lock the timing drive sprockets.

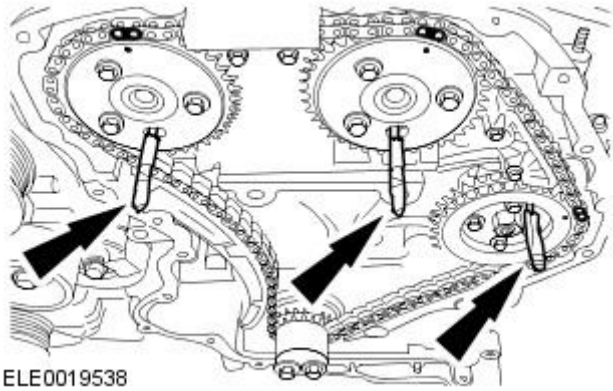

8. Detension and lock the timing chain tensioner.

1. Retract the pawl.
2. Push the lock in.
3. Insert a pin.

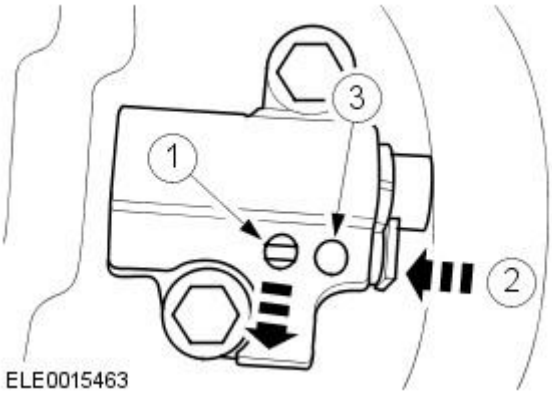

9. NOTE: Engine removed for clarity.

Remove the timing chain tensioner and guides.

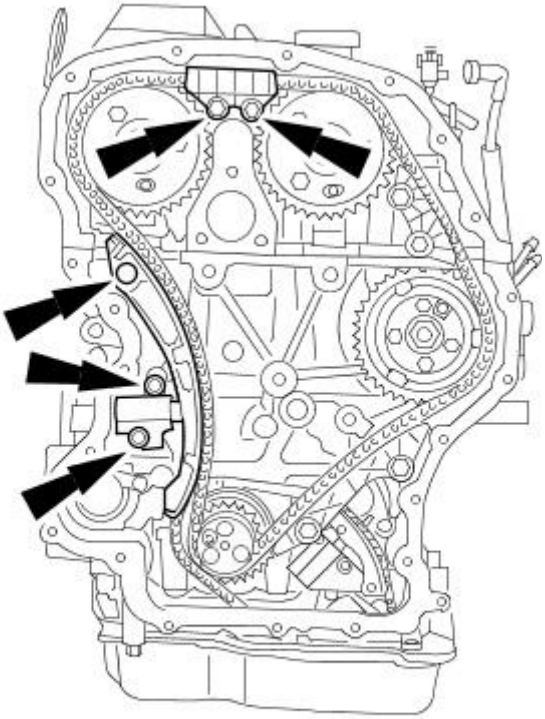

10. Remove the timing chain.

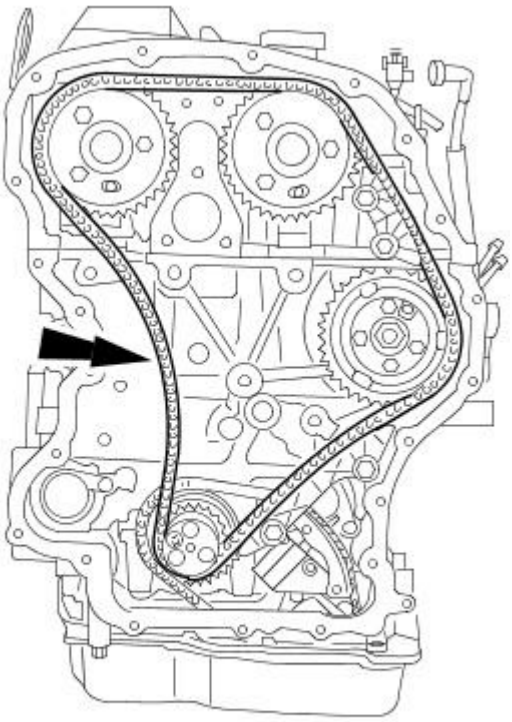

E46626

Installation

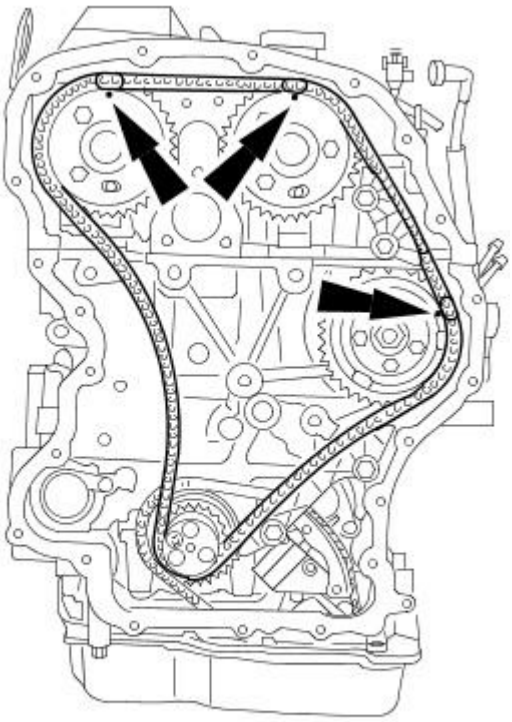

E46627

1. CAUTION: Make sure the colored links align to the timing marks. Failure to follow this instruction may result in damage to the vehicle.

Install the timing chain.

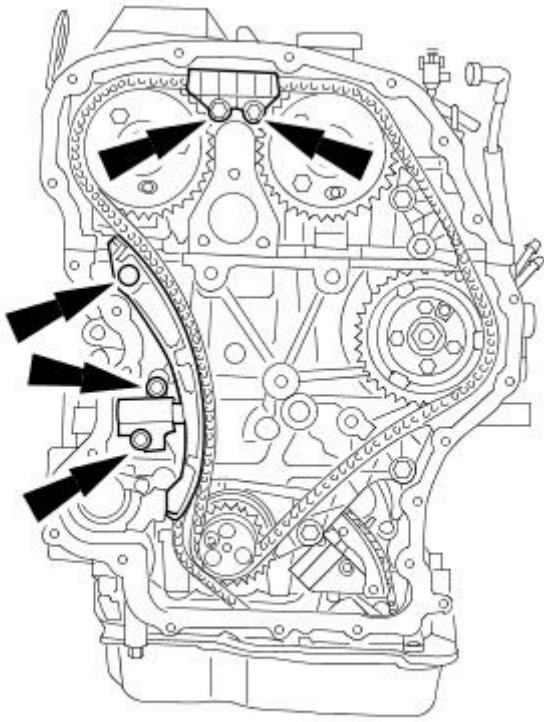

2. CAUTION: Make sure the timing chain tensioner is fully retracted before installation. Failure to follow this instruction may result in damage to the vehicle.

• NOTE: Engine removed for clarity.

Install the timing chain tensioner and guides.

- Tighten to 15 Nm.

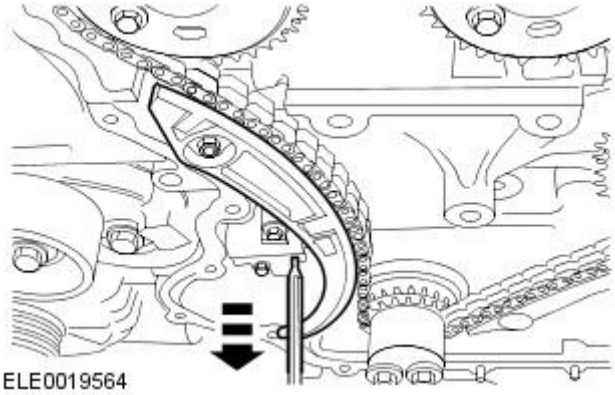

3. NOTE: Make sure the timing chain tensioner is completely released.

Unlock the timing chain tensioner.

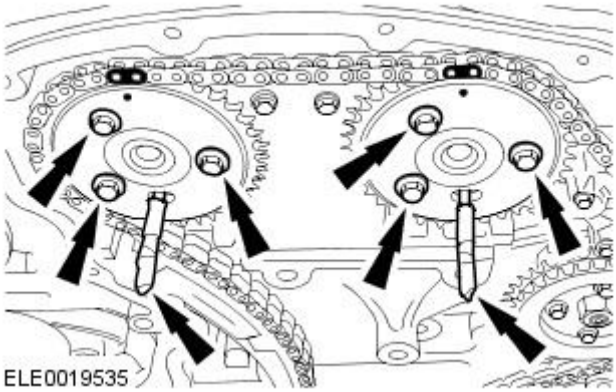

4. Tighten to 35 Nm.

5. Tighten to 33 Nm.

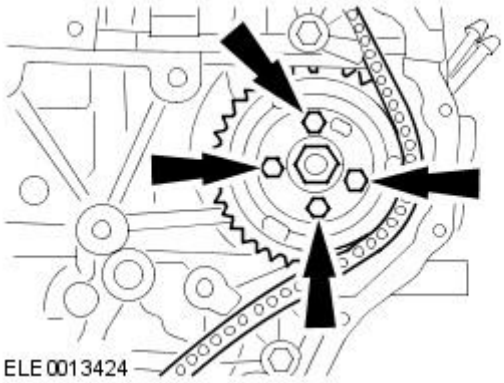

6. Remove the suitable 6 mm bar.

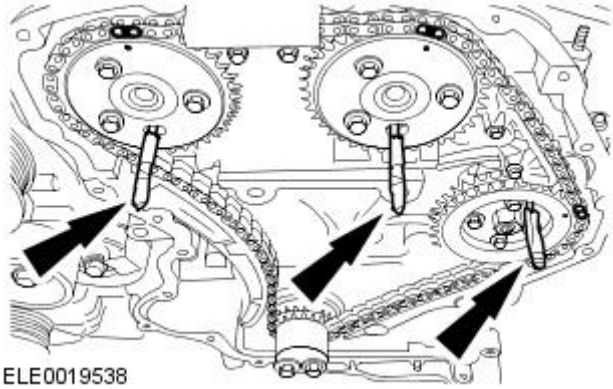

7. Remove the special tool from the crankshaft position (CKP) sensor hole.

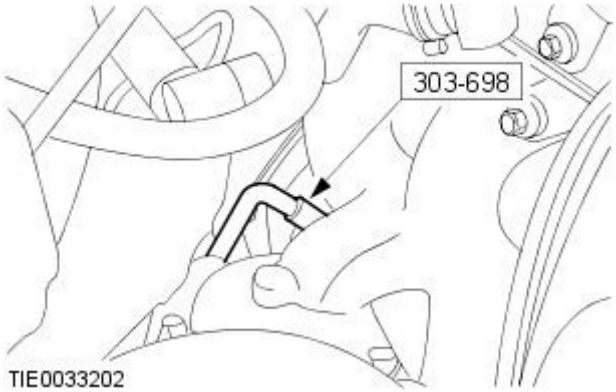

8. NOTE: Only turn the engine in the normal direction of rotation.

Using a suitable screwdriver, turn the engine clockwise two revolutions.

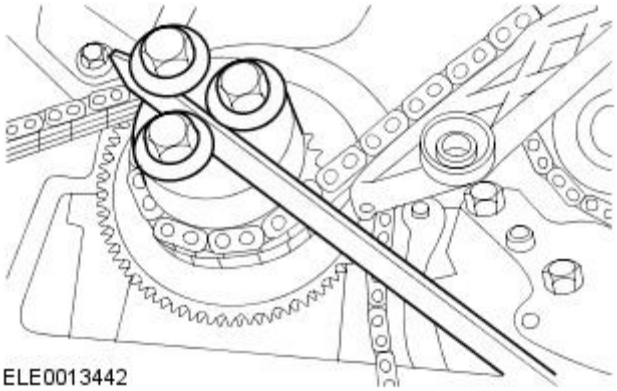

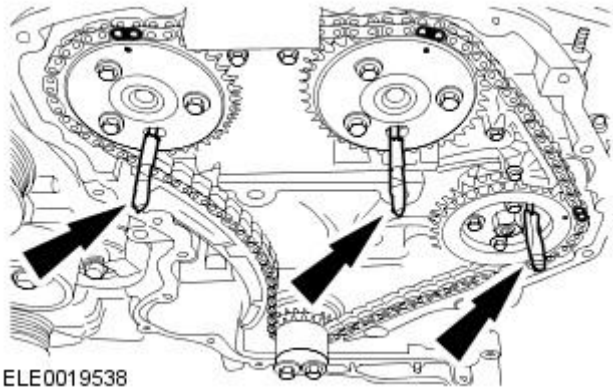

9. Check the camshaft timing by inserting a suitable 6 mm bar through the holes in the camshaft and fuel injection pump sprockets.

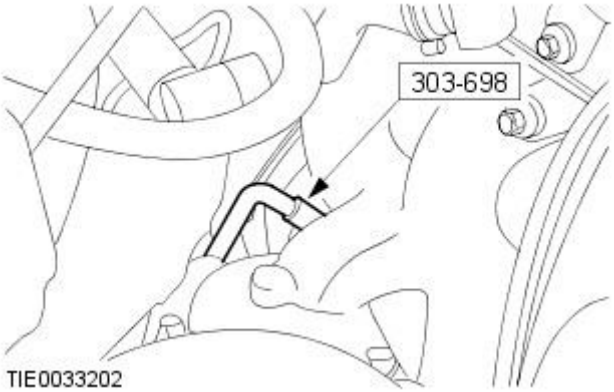

10. Check the timing by inserting the special tool in the CKP sensor hole.

11. Remove the special tool and the suitable 6 mm bar.

12. Install the CKP sensor.
For additional information, refer to: Crankshaft Position (CKP) Sensor (303-14B Electronic Engine Controls - 2.0L Duratorq-TDCi/2.2L Duratorq-TDCi (110kW/150PS) - Puma, Removal and Installation).

13. Install the air intake pipe.
For additional information, refer to: Air Cleaner (303-12B Intake Air Distribution and Filtering - 2.0L Duratorq-TDCi/2.2L Duratorq-TDCi (110kW/150PS) - Puma, Removal and Installation).

14. Install the engine front cover.
For additional information, refer to: Engine Front Cover (303-01B Engine - 2.0L Duratorq-TDCi/2.2L Duratorq-TDCi (110kW/150PS) - Puma, In-vehicle Repair).

Engine - 2.0L Duratorq-TDCi / 2.2L Duratorq-TDCi (110kW / 150PS) - Puma - Valve Cover

In-vehicle Repair

Special Tool(s)	
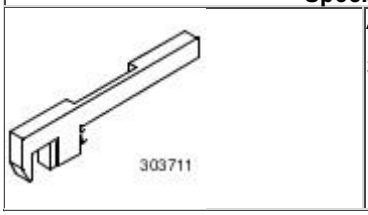	Aligner, Fuel Injector 303-711 (21-258)

General Equipment

Pneumatic vacuum gun

Materials

Name	Specification
High pressure fuel supply line union	TBD
lubricant TBD	

Removal

• WARNINGS:

Wait at least 15 minutes after the engine stops before commencing any repair to the high pressure fuel injection system. Failure to follow this instruction may result in personal injury.

Do not smoke or carry lighted tobacco or open flame of any type when working on or near any fuel related components. Highly flammable mixtures are always present and may ignite. Failure to follow these instructions may result in personal injury.

This procedure involves fuel handling. Be prepared for fuel spillage at all times and always observe fuel handling precautions. Failure to follow these instructions may result in personal injury.

Do not carry out any repairs to the fuel injection system with the engine running. The fuel pressure within the system can be as high as 1600 bar. Failure to follow this instruction may result in personal injury.

• CAUTIONS:

Make sure the workshop area in which the vehicle is being worked on is as clean and as dust free as possible. Foreign matter from work on clutches, brakes or from machining or welding operations can contaminate the fuel system and may result in later malfunction.

Always carry out the cleaning process before carrying out any repairs to the fuel injection system components. Failure to follow this instruction may result in foreign matter ingress to the fuel injection system.

Fuel injection equipment is manufactured to very precise tolerances and fine clearances. It is therefore essential that absolute cleanliness is observed when working with these components. Always install blanking plugs to any open orifices or lines.

Do not disassemble the fuel injectors or clean the nozzles, even with an ultrasonic cleaner. Always install new fuel injectors when required.

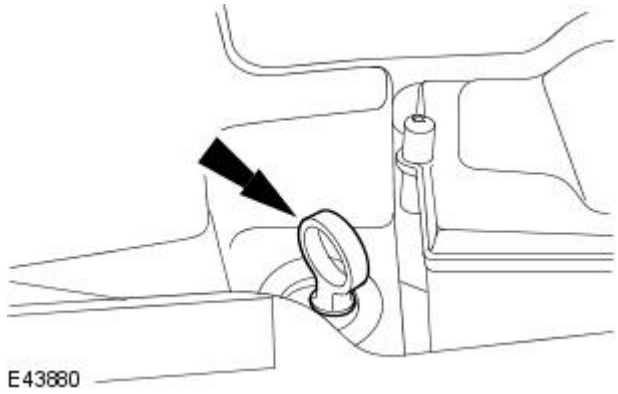

1. Remove the oil level indicator.

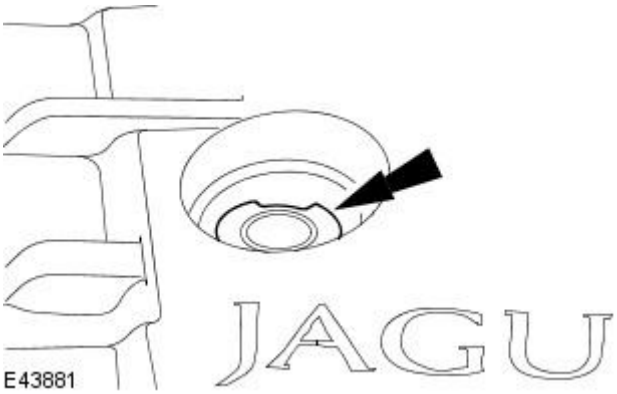

2. Remove the oil filler cap.

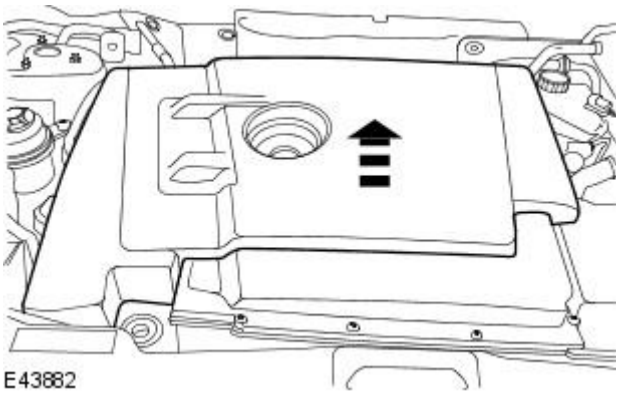

3. NOTE: Install the engine oil filler cap to prevent foreign material entering the valve cover.

Remove the engine cover.

4. CAUTION: Protect the fuel injector electrical connectors with lint-free material to prevent contamination from the cleaning fluid.

Clean the fuel injector, high-pressure fuel supply line and surrounding areas.
For additional information, refer to: Fuel Injection Component Cleaning (303-04B Fuel Charging and Controls - 2.0L Duratorq-TDCi/2.2L Duratorq-TDCi (110kW/150PS) - Puma, General Procedures).

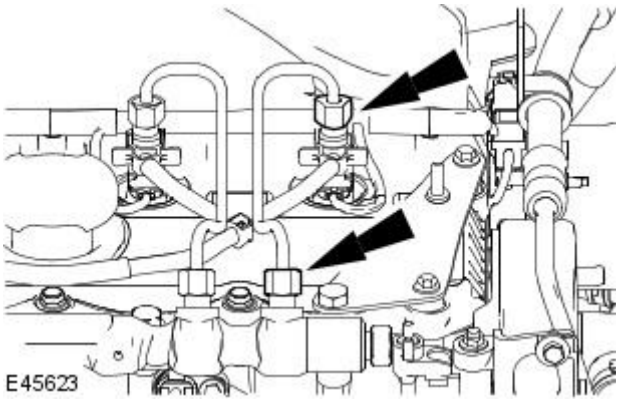

5. CAUTIONS:

Make sure that the high-pressure fuel supply line remains in contact with both the fuel injector and the fuel injection supply manifold until both unions have been detached and cleaned. Failure to follow this instruction may result in foreign matter ingress to the fuel injection system.

Make sure the tool used to loosen the high-pressure fuel supply line unions is used at the top of the unions as this is where there is most material. Failure to follow this instruction may result in damage to the unions.

Make sure that the fuel injector does not move when loosening the high-pressure fuel supply lines. Failure to follow this instruction will result in damage to the fuel injector and the fuel injector sealing washer.

• NOTE: One pipe shown other pipes are similar.

Loosen the high-pressure fuel supply line from the fuel injector and fuel injection supply manifold.

6. CAUTION: Make sure that the high-pressure fuel supply line remains in contact with both the fuel injector and the fuel injection supply manifold until both unions have been detached and cleaned. Failure to follow this instruction may result in foreign matter ingress to the fuel injection system.

Using the pneumatic vacuum gun, vacuum foreign material from the high-pressure fuel supply line, the fuel injector and the fuel injection supply manifold.

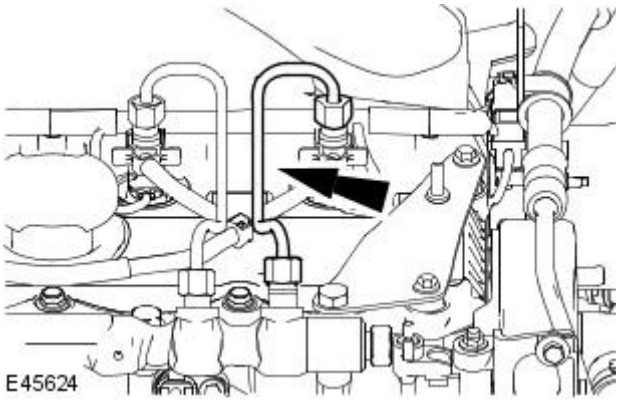

7. NOTE: One pipe shown other pipes are similar.

Remove and discard the high-pressure fuel supply line.

8. Using the pneumatic vacuum gun, vacuum foreign material from the fuel injector and the fuel injection supply manifold.

9. Install blanking caps to the open threaded ports on the fuel injector and the fuel injection supply manifold.

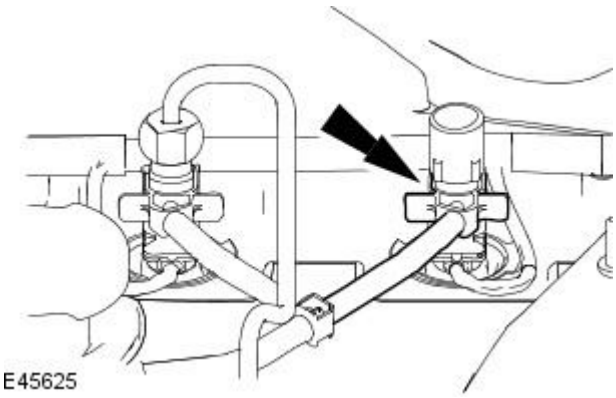

10. NOTE: One fuel return line shown other fuel return lines are similar.

Disconnect the fuel return line from the fuel injector.

- Discard the fuel return line O-ring seal.

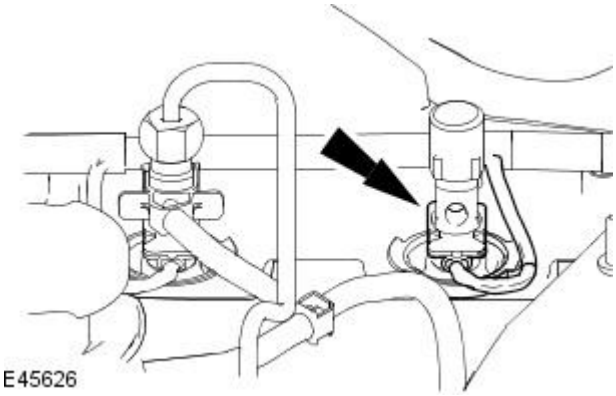

11. NOTE: One fuel injector electrical connector shown other fuel injector electrical connectors are similar.

Disconnect the fuel injector electrical connector.

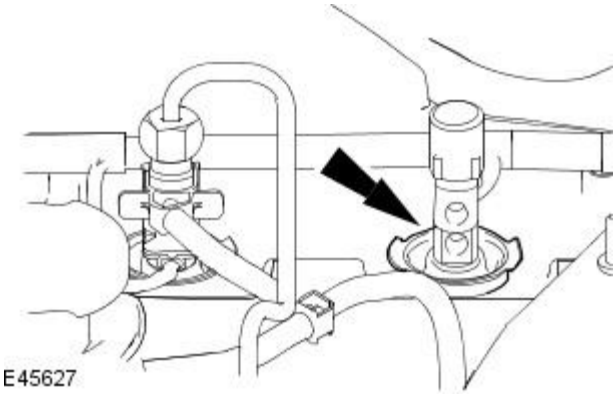

12. NOTE: One fuel injector shown other fuel injectors are similar.

Remove the valve cover fuel injector seal.

- Discard the valve cover fuel injector seal.

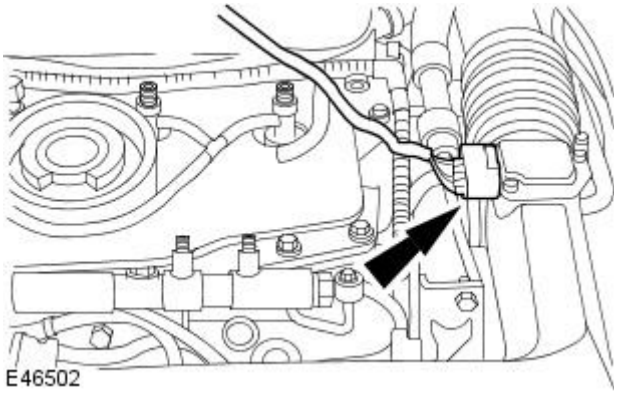

13. Disconnect the mass air flow (MAF) sensor electrical connector.

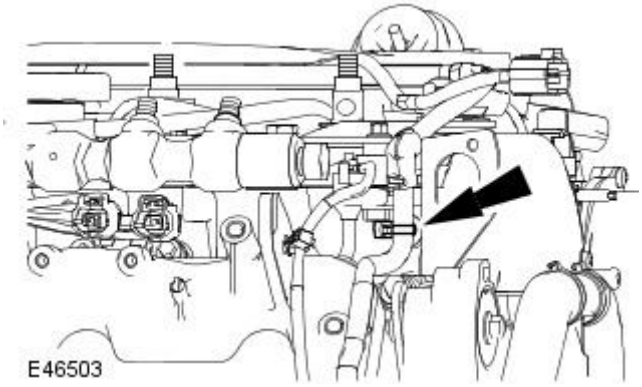

14. Detach the starter motor wiring harness.

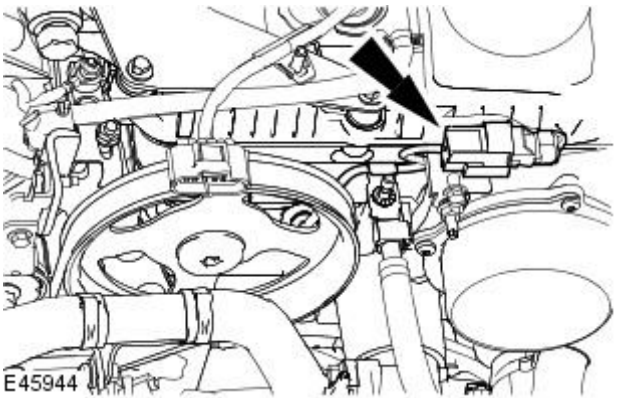

15. Detach the cylinder head temperature (CHT) sensor electrical connector.

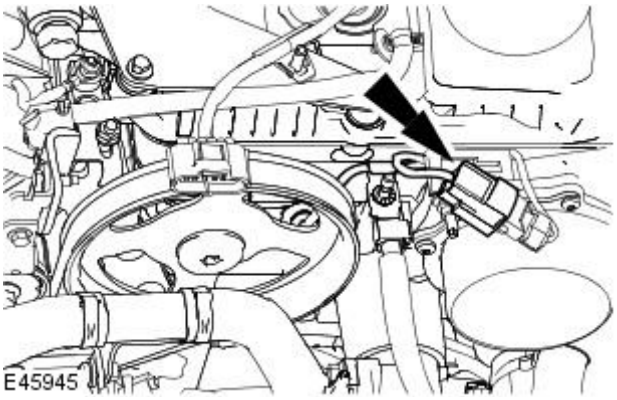

16. Disconnect the CHT sensor electrical connector.

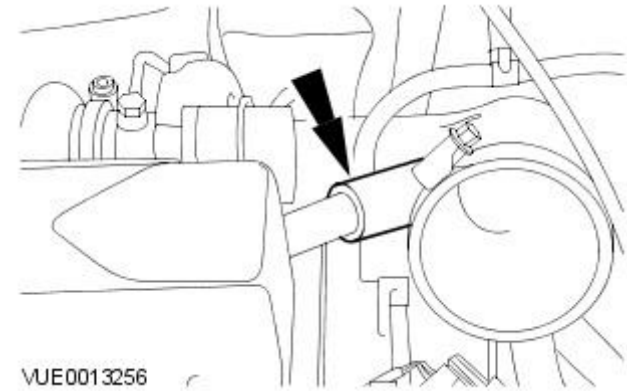

17. Disconnect the positive crankcase ventilation (PCV) hose from the valve cover.

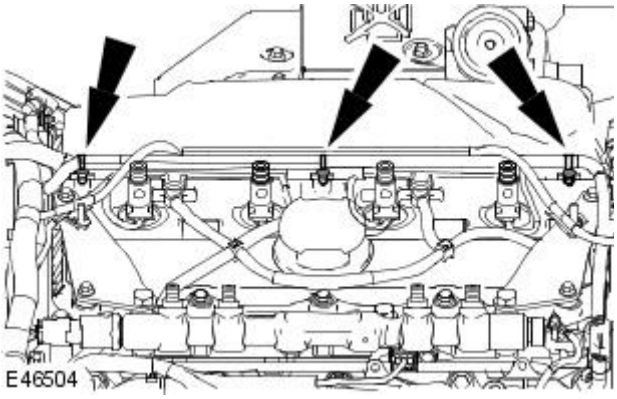

18. Detach the starter motor and injector wiring harness.

- Reposition and tie the wiring harness aside.

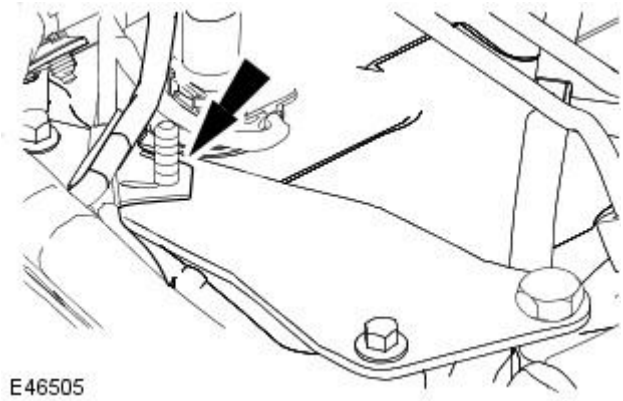

19. NOTE: Right-hand shown left-hand similar.

Detach the mass air flow (MAF) sensor wiring harness.

- Reposition and tie the wiring harness aside.

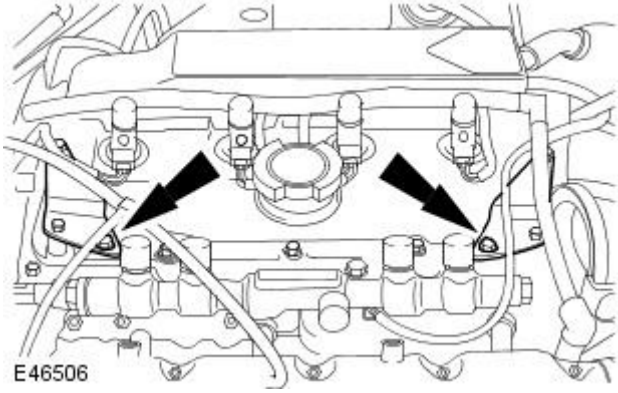

20. Remove the fuel injection supply manifold retaining bolts.

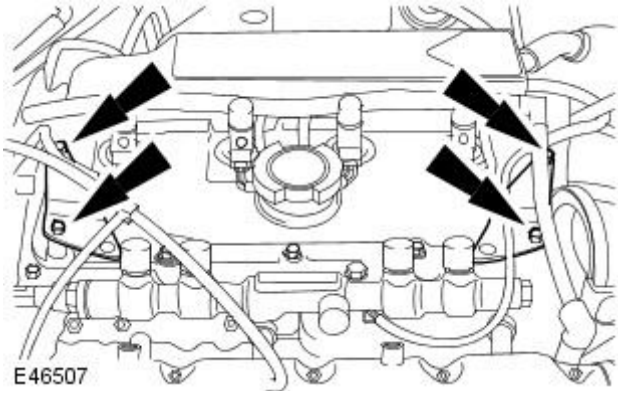

21. Remove the fuel injection supply manifold support brackets.

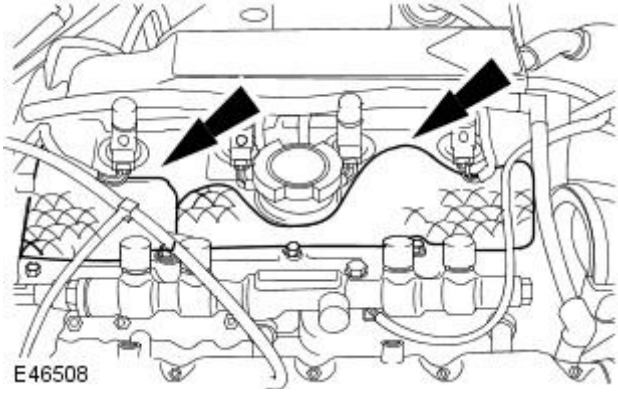

22. Remove the sound proof padding.

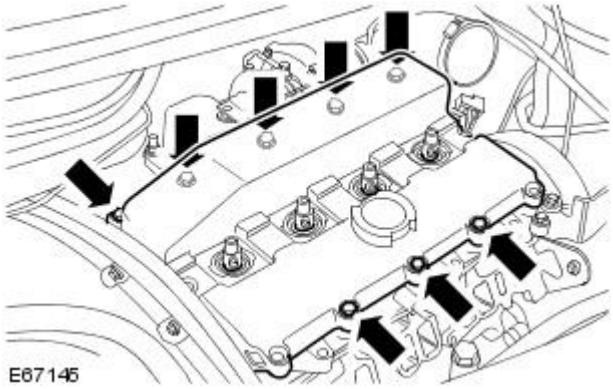

23. Remove the valve cover.

- Remove and discard the valve cover gasket.

Installation

• WARNINGS:

Do not smoke or carry lighted tobacco or open flame of any type when working on or near any fuel related components. Highly flammable mixtures are always present and may ignite. Failure to follow these instructions may result in personal injury.

This procedure involves fuel handling. Be prepared for fuel spillage at all times and always observe fuel handling precautions. Failure to follow these instructions may result in personal injury.

• CAUTIONS:

Make sure the workshop area in which the vehicle is being worked on is as clean and as dust free as possible. Foreign matter from work on clutches, brakes or from machining or welding operations can contaminate the fuel system and may result in later malfunction.

Always carry out the cleaning process before carrying out any repairs to the fuel injection system components. Failure to follow this instruction may result in foreign matter ingress to the fuel injection system.

Diesel fuel injection equipment is manufactured to very precise tolerances and fine clearances. It is therefore essential that absolute cleanliness is observed when working with these components. Always install blanking plugs to any open orifices or lines.

Do not disassemble the fuel injectors or clean the nozzles, even with an ultrasonic cleaner. Always install new fuel injectors when required.

• NOTE: Install new high-pressure fuel supply lines.

• NOTE: Install a new valve cover fuel injector seal.

• NOTE: Install a new injector nut O-ring seal (if equipped).

• NOTE: Install new fuel return line O-ring seals.

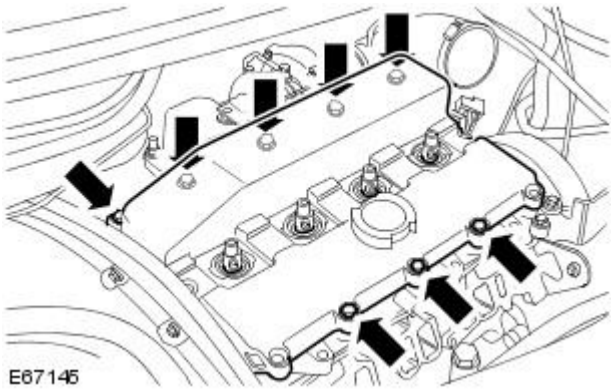

1. NOTE: Install a new valve cover gasket.

Install the valve cover.

- Tighten to 10 Nm.

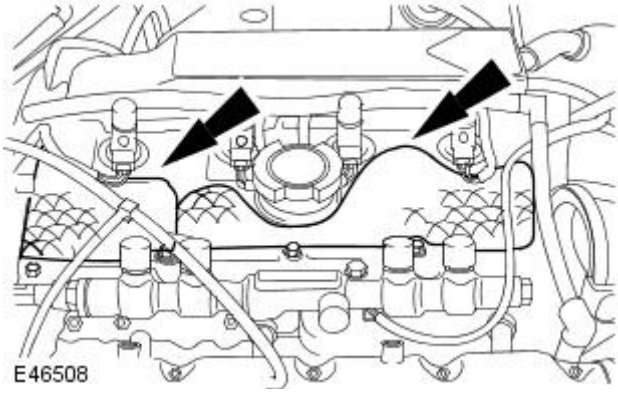

2. Install the sound proof padding.

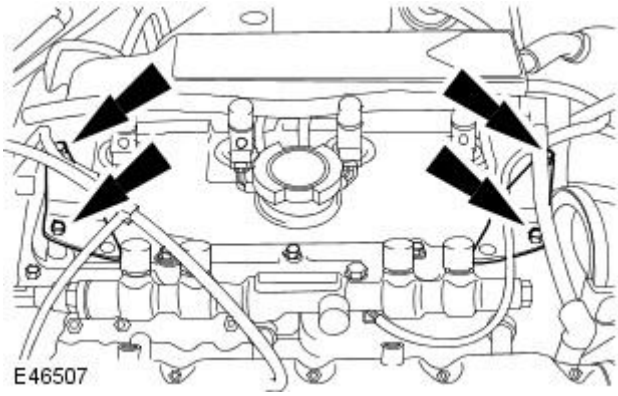

3. NOTE: Do not tighten the retaining bolts at this stage.

Install the fuel rail brackets.

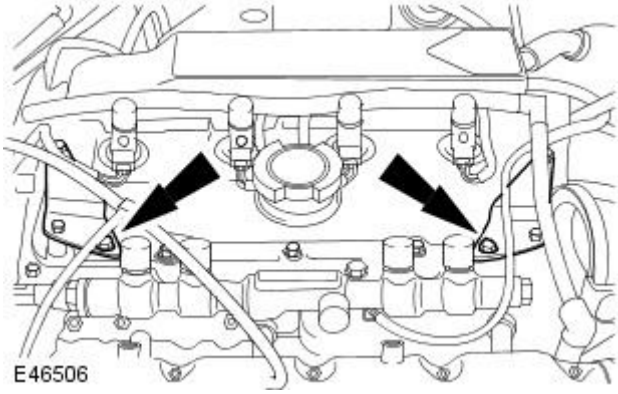

4. NOTE: Do not tighten the retaining bolts at this stage.

Install the fuel injection supply manifold retaining bolts.

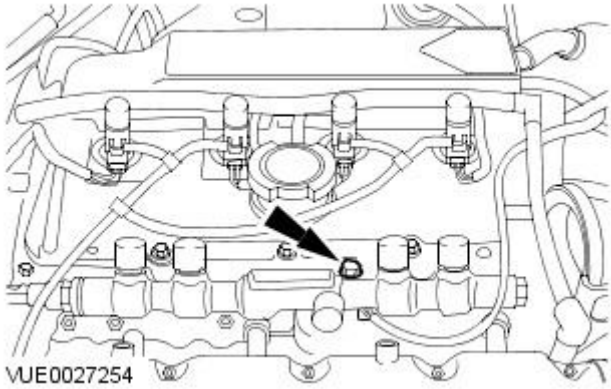

5. Loosen the fuel injection supply manifold retaining bolt.

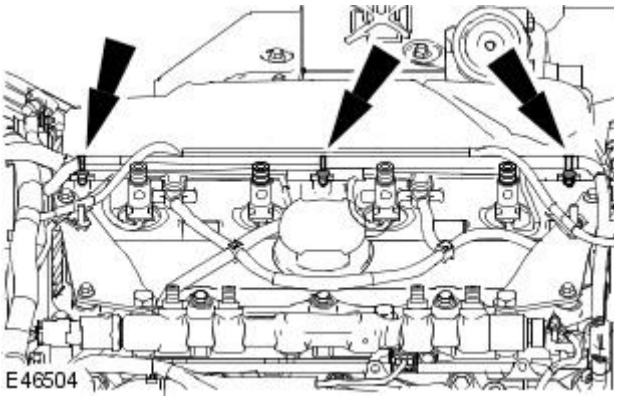

6. NOTE: Remove the tie strap.

Attach the starter motor and injector wiring harness.

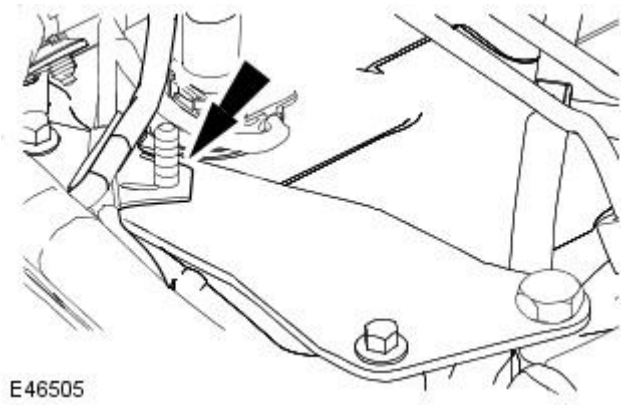

7. NOTE: Right-hand shown left-hand similar.

Attach the MAF sensor wiring harness.

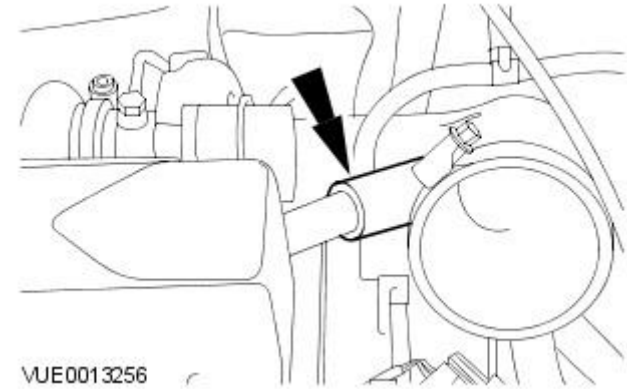

8. Connect the positive crankcase ventilation (PCV) hose to the valve cover.

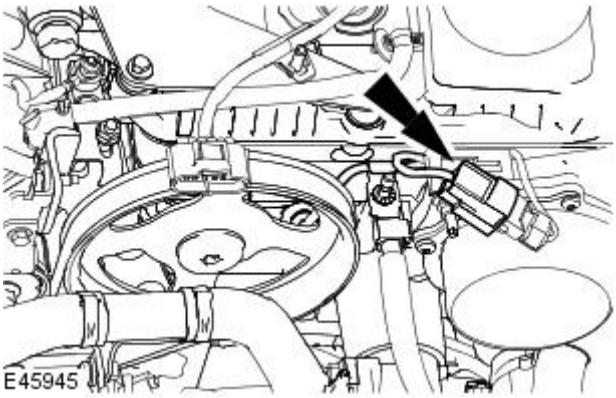

9. Connect the CHT sensor electrical connector.

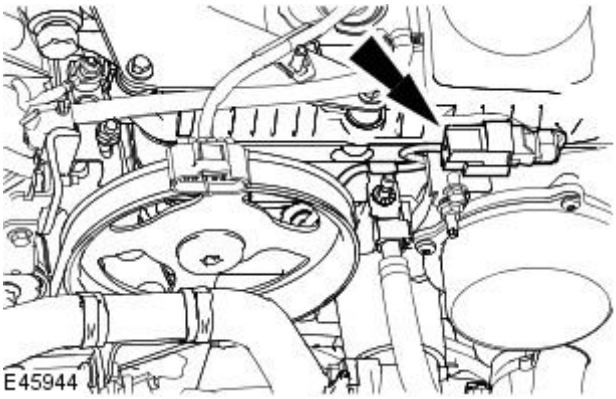

10. Attach the (CHT) sensor electrical connector.

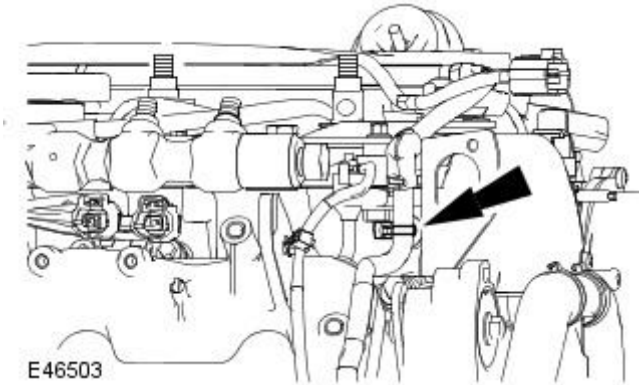

11. Attach the starter motor wiring harness.

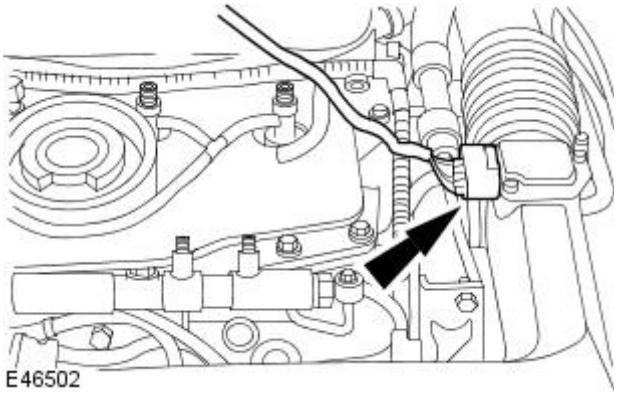

12. Connect the MAF sensor electrical connector.

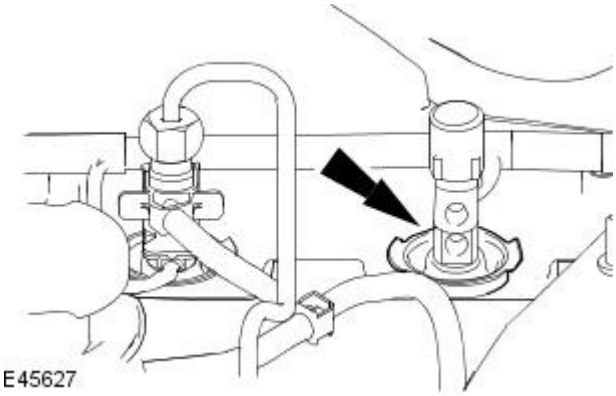

13. NOTE: One fuel injector shown other fuel injectors are similar.

Install a new valve cover fuel injector seal.

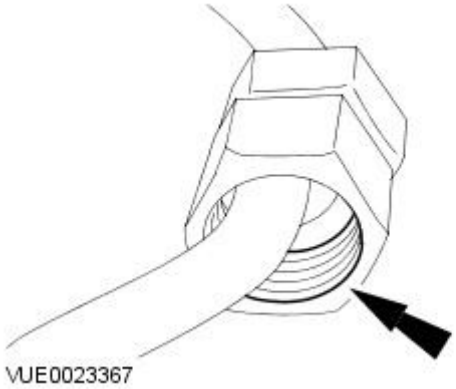

14. Lubricate the high-pressure fuel supply line union threads with clean lubricant.

15. CAUTION: Do not allow the unions to hit the olive ends of the high-pressure fuel supply line as this may damage the ends of the line and allow foreign matter to enter the fuel injection system.

• NOTE: The yellow colored collar is fitted at the fuel injector end and the blue colored collar is fitted at the fuel supply manifold end of the high-pressure fuel supply line.

• NOTE: To aid identification of the high-pressure fuel supply line, the union at the fuel injector end is etched with the cylinder number.

Position the high-pressure fuel supply line as near to the final installation position as possible and then remove and discard the blanking plugs from the high-pressure fuel supply line.

16. Remove the blanking plug from the fuel injector and the fuel injection supply manifold threaded port.

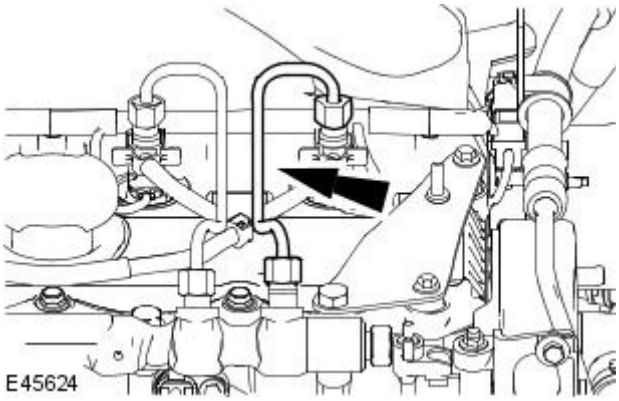

17. CAUTION: Maintain pressure on the high-pressure fuel supply line to keep the olives in contact with the fuel injectors and the fuel injection supply manifold cones while installing the unions.

• NOTE: Install the high-pressure fuel supply lines to the fuel injection supply manifold end first followed by the fuel injector end.

• NOTE: Do not tighten the high-pressure fuel supply line unions at this stage.

Install new high-pressure fuel supply lines.

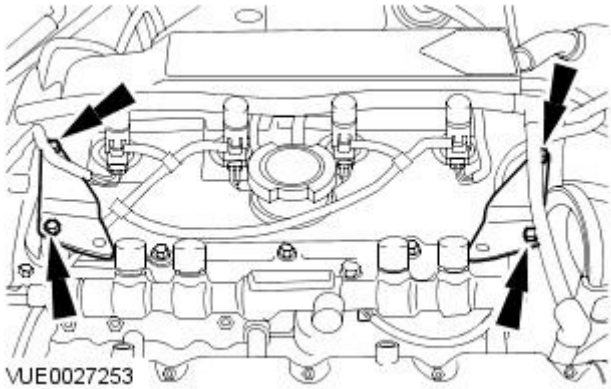

18. NOTE: High pressure fuel supply lines shown removed for clarity.

Tighten the fuel injection supply manifold support brackets retaining bolts.

- Tighten to 14 Nm.

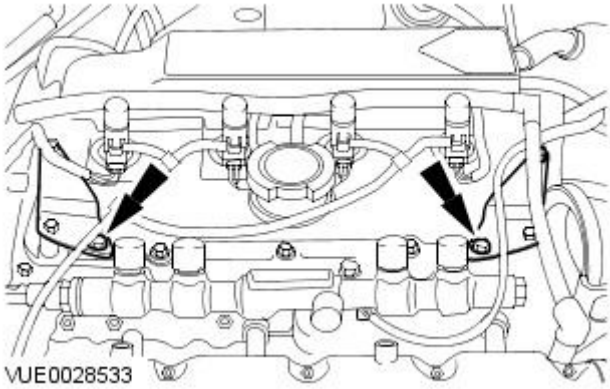

19. NOTE: High pressure fuel supply lines shown removed for clarity.

Tighten the fuel injection supply manifold retaining bolts.

- Tighten to 23 Nm.

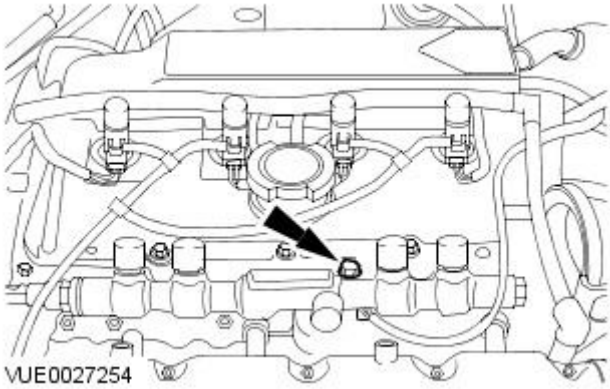

20. NOTE: High pressure fuel supply lines shown removed for clarity.

Tighten the fuel injection supply manifold retaining bolt.

- Tighten to 23 Nm.

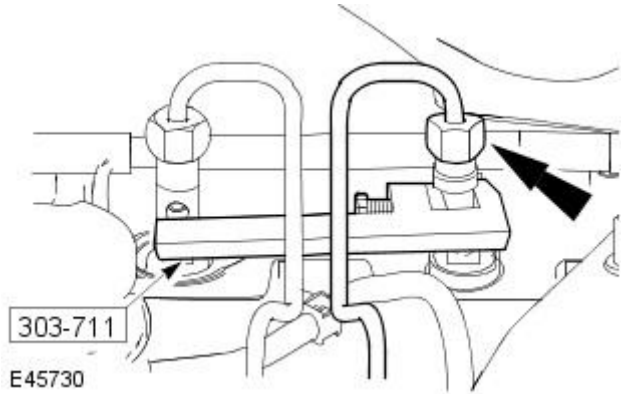

21. CAUTIONS:

Make sure the special tool is clamped around the fuel injector which is being tightened and is resting up against the adjacent fuel injector.

Make sure the tool used to tighten the high-pressure fuel supply line unions is used at the top of the union as this is where there is most material. Failure to follow this instruction may result in damage to the union.

Make sure that the fuel injector does not move when tightening the high-pressure fuel supply lines. Failure to follow this instruction will result in damage to the fuel injector and the fuel injector sealing washer.

• NOTE: One fuel injector shown other fuel injectors are similar.

Install the special tool and tighten the high-pressure fuel supply line union at the fuel injector.

- Tighten to 40 Nm.

22. Remove the special tool.

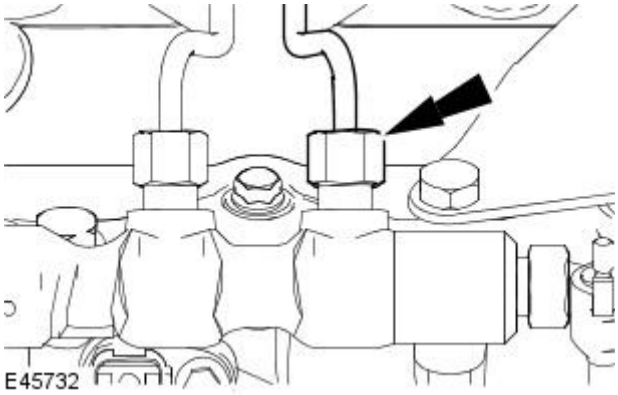

23. CAUTION: Make sure the tool used to tighten the high-pressure fuel supply line unions is used at the top of the union as this is where there is most material. Failure to follow this instruction may result in damage to the union.

Tighten the high-pressure fuel supply line union at the fuel injection supply manifold.

- Tighten to 40 Nm.

24. Connect the fuel injector electrical connectors.

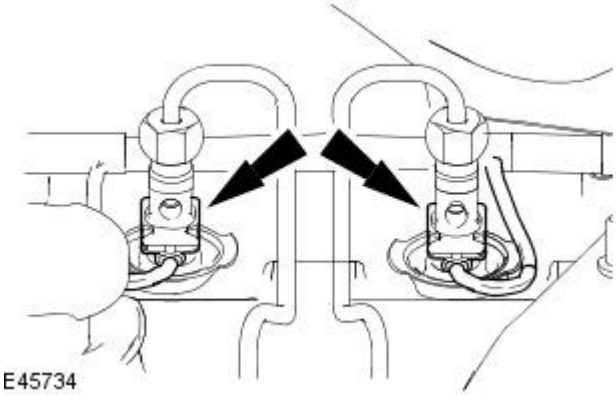

25. Connect the fuel return lines to the fuel injectors.

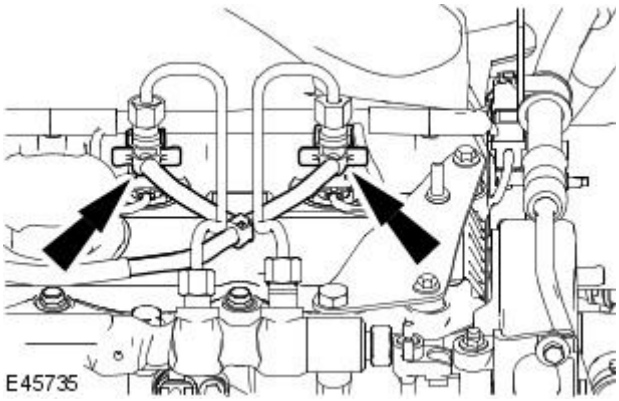

26. Install the engine cover.

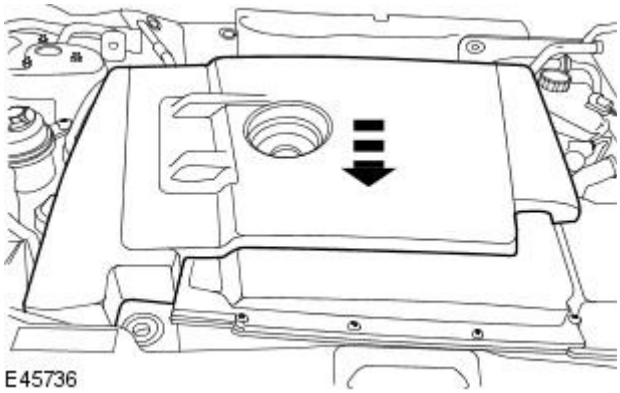

27. Install the oil filler cap.

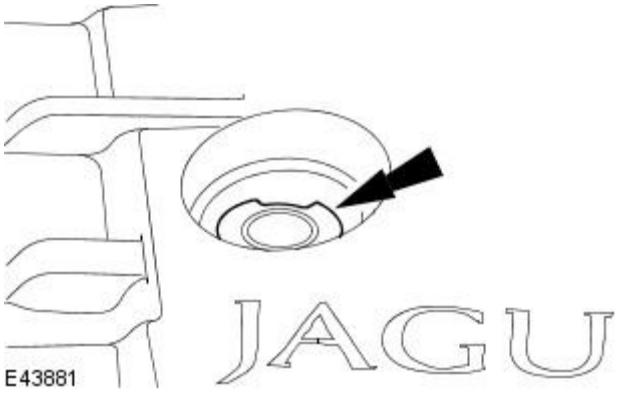

28. Install the oil level indicator.

Engine - 2.0L Duratorq-TDCi / 2.2L Duratorq-TDCi (110kW / 150PS) - Puma - Engine2.0L Duratorq-TDCi

Removal

Special Tool(s)	
24003	Remover/Installer, Cooling Hose Clamp 303-397 (24-003)
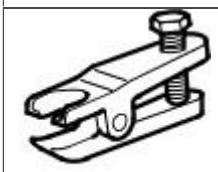 204-192	Ball joint splitter 204-192
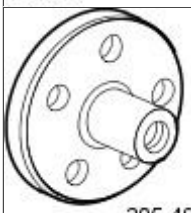 205-491	Wheel hub puller 205-491
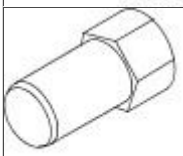 20549101	Adaptor nuts 205-491-01
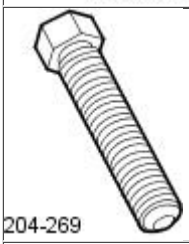 204-269	Forcing screw 204-269
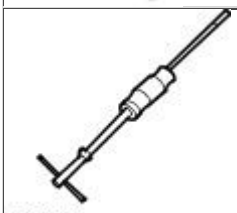 100012	Slide hammer 100-012
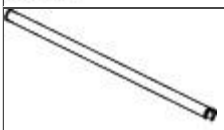 100-012-02	Slide hammer shaft 100-012-02
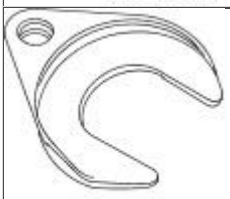 204-226	Halfshaft remover fork 204-226
HTJ12002	Powertrain assembly jack HTJ1200-02

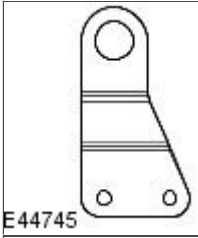 E44745	Engine lifting eye 303-1067
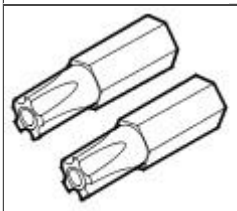 418-535	5 Point Security Torx Bit 418-535

Removal

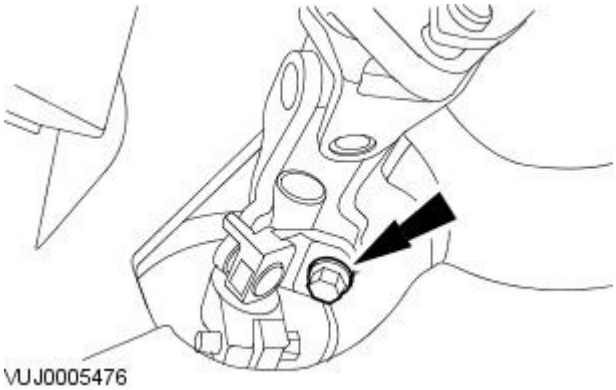
VUJ0005476

1. Detach the lower steering column shaft.

2. Remove the battery tray.
   For additional information, refer to: Battery Tray (414-01 Battery, Mounting and Cables, Removal and Installation).
3. Recover the air conditioning refrigerant.
   For additional information, refer to: Air Conditioning (A/C) System Recovery, Evacuation and Charging (412-00 Climate Control System - General Information, General Procedures).
4. Drain the cooling system.
   For additional information, refer to: Cooling System Draining, Filling and Bleeding (303-03B Engine Cooling - 2.0L Duratorq-TDCi/2.2L Duratorq-TDCi (110kW/150PS) - Puma, General Procedures).
5. Remove the exhaust flexible pipe.
   For additional information, refer to: Exhaust Flexible Pipe - 2.0L Duratorq-TDCi/2.2L Duratorq-TDCi (110kW/150PS) - Puma (309-00 Exhaust System, Removal and Installation).
6. Disconnect the heater hoses from the heater core.

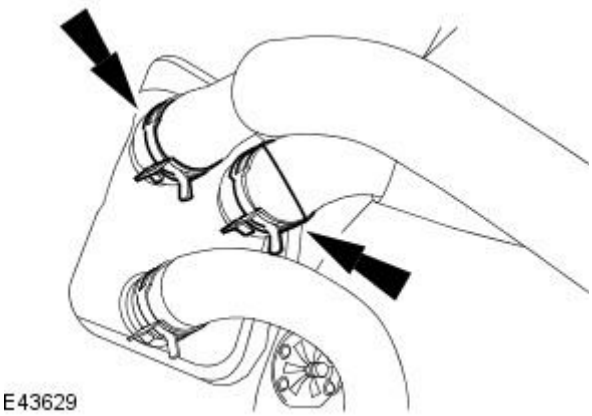
E43629

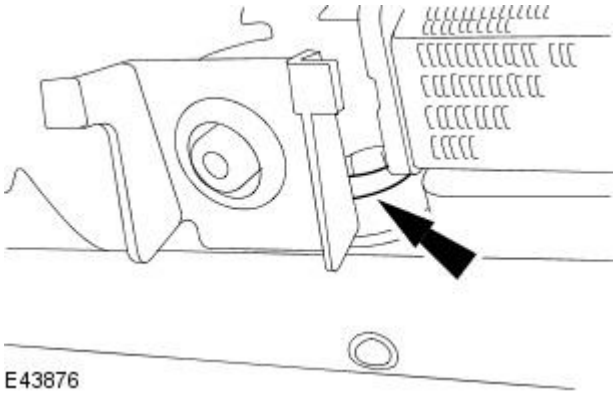

7. Disconnect the radiator lower coolant hose.

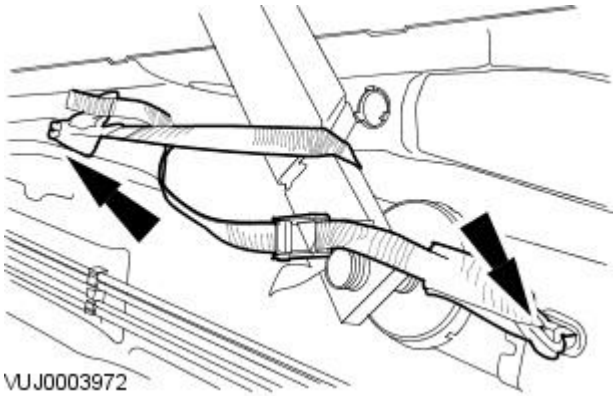

8. CAUTION: To prevent the vehicle becoming unstable when the engine and transmission assembly are removed, install the vehicle tie-down straps. Failure to follow this instruction may result in damage to the vehicle.

- NOTE: Right-hand shown, left-hand similar.

Install the front vehicle tie down straps.

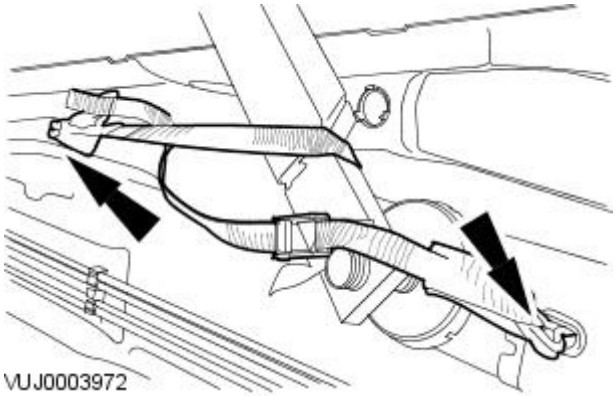

9. CAUTION: To prevent the vehicle becoming unstable when the engine and transmission assembly are removed, install the vehicle tie-down straps. Failure to follow this instruction may result in damage to the vehicle.

- NOTE: Right-hand shown, left-hand similar.

Install the rear vehicle tie down straps.

10. Lower the vehicle to a suitable working height.

11. Remove the front wheels and tires.
For additional information, refer to: Wheel and Tire (204-04 Wheels and Tires, Removal and Installation).

12. Remove the front brake pads.
For additional information, refer to: Brake Pads (206-03 Front Disc Brake, Removal and Installation).

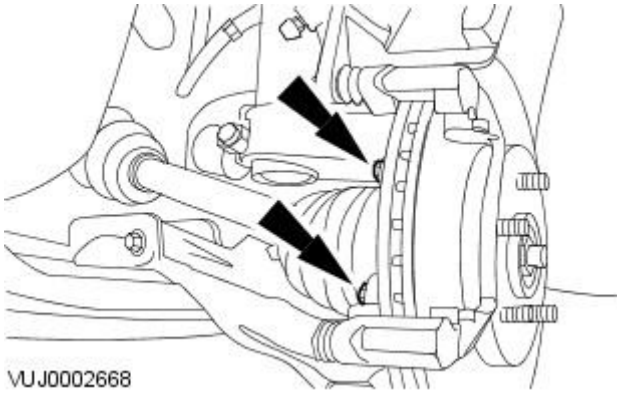

13. NOTE: Left-hand shown, right-hand similar.

Remove and discard the brake caliper anchor plate retaining bolts.

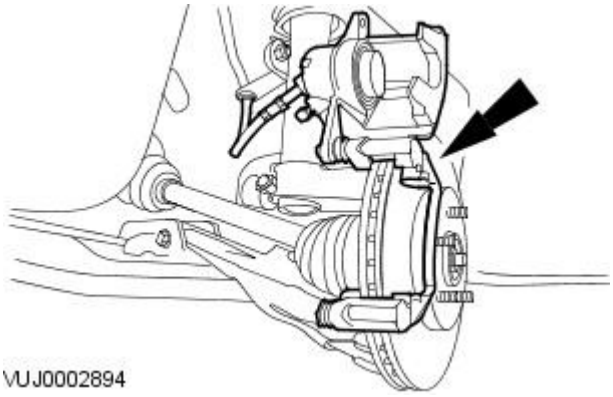

14. NOTE: Left-hand shown, right-hand similar.

Detach the brake caliper and brake caliper anchor plate assembly.

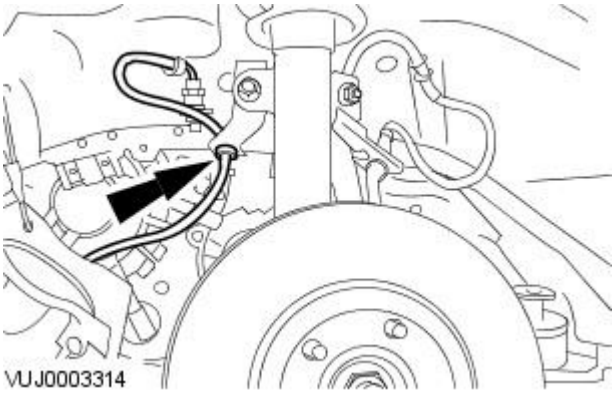

15. NOTE: Left-hand shown, right-hand similar.

Detach the brake pipe.

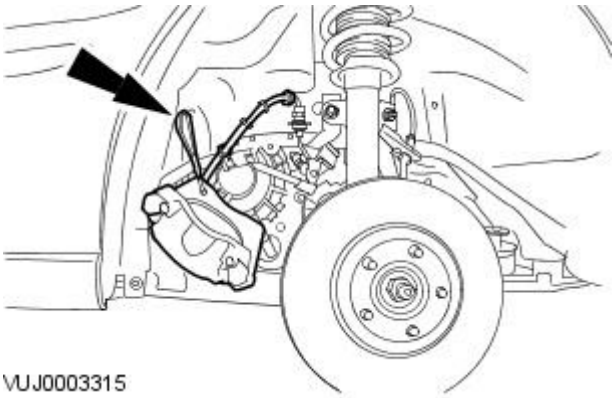

16. CAUTION: Support the brake caliper assembly using tie straps. Failure to follow this instruction may result in damage to the vehicle.

- NOTE: Left-hand shown, right-hand similar.

Reposition and attach the brake caliper assembly.

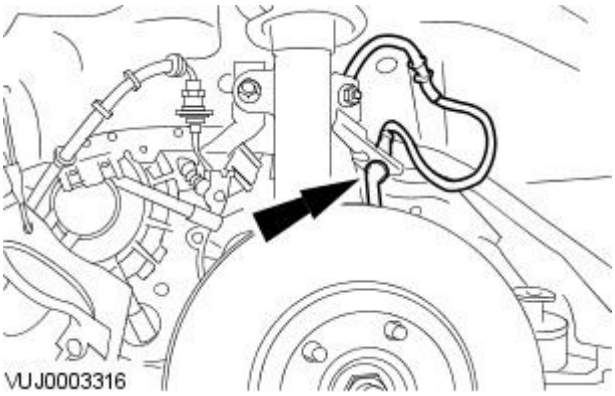

17. NOTE: Left-hand shown, right-hand similar.

Detach the anti-lock braking system (ABS) wheel speed sensor.

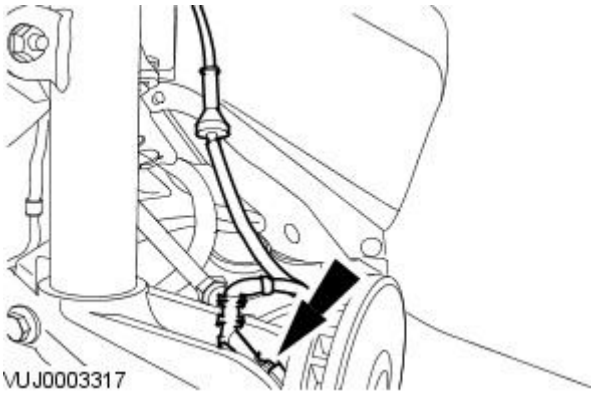

18. NOTE: Left-hand shown, right-hand similar.

Disconnect the ABS wheel speed sensor.

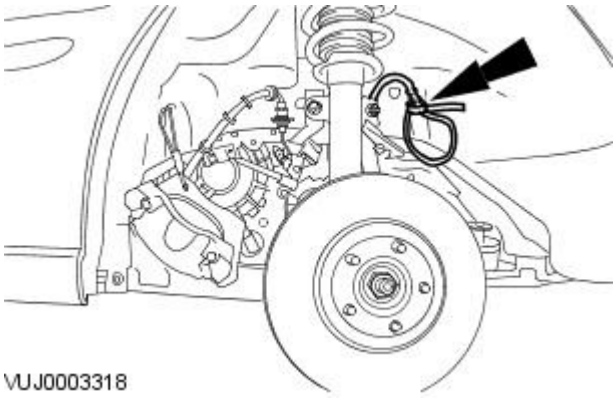

19. CAUTION: Secure the ABS wheel speed sensor using tie straps. Failure to follow this instruction may result in damage to the vehicle.

- NOTE: Left-hand shown, right-hand similar.

Reposition and attach the ABS wheel speed sensor.

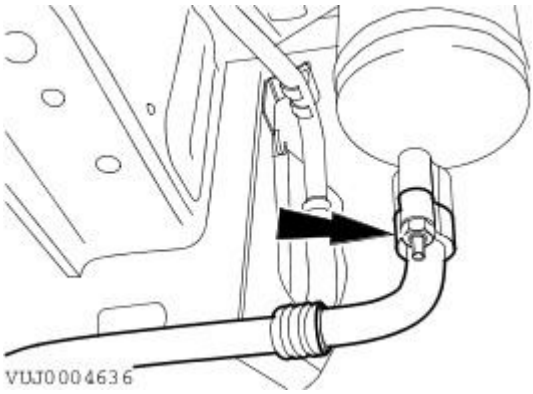

20. NOTE: Remove and discard the O-ring seal.

- NOTE: Cap the exposed ports.

Disconnect the suction accumulator pipe.

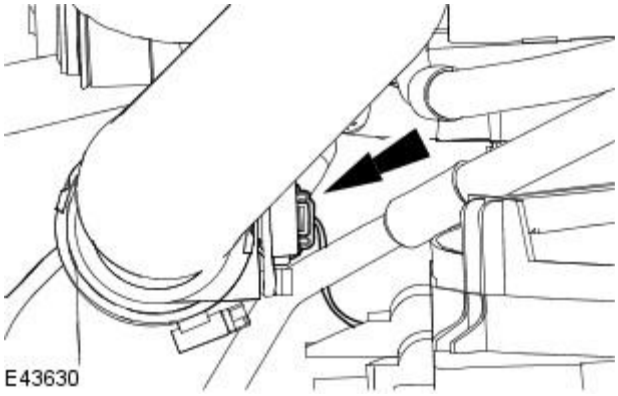

21. Disconnect the air temperature sensor electrical connector.

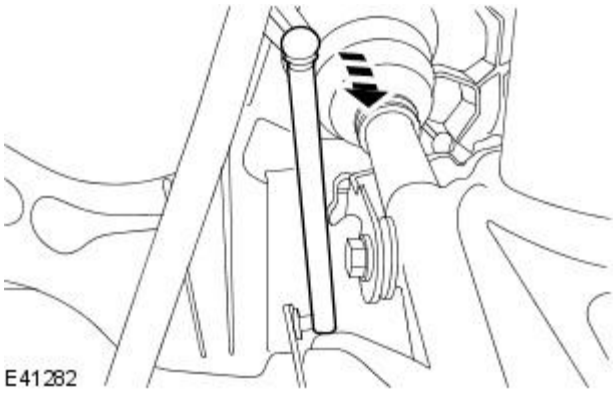

22. Disconnect the high intensity discharge (H.I.D) sensor drop arm.

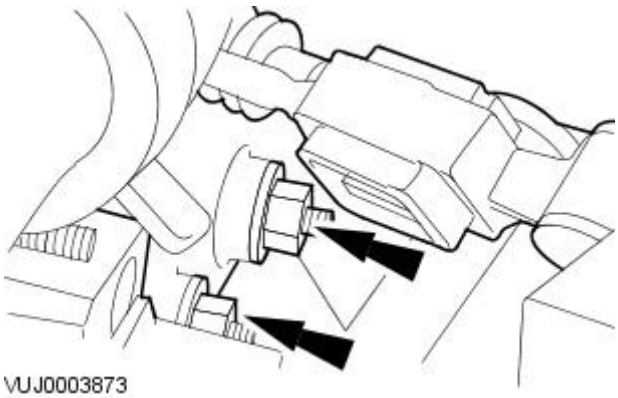

23. Detach the selector cables.

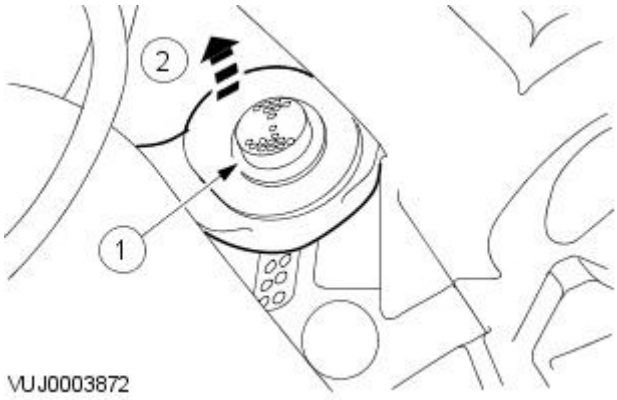

24. NOTE: Secure the selector cables using tie straps.

Detach the selector cables.

1. Press the retaining clip.
2. Detach the selector cables.

25. Remove the front bumper splitter vain.

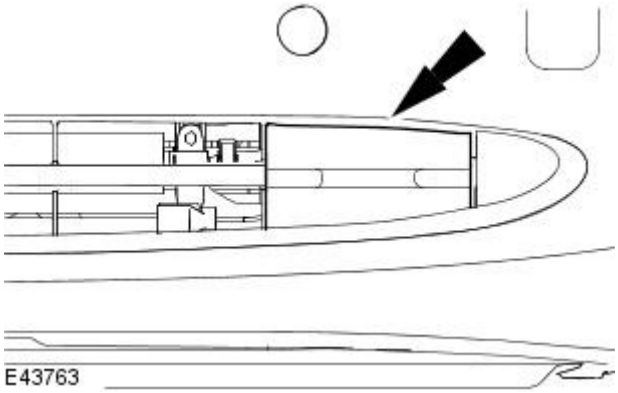

26. NOTE: Left-hand shown, right-hand similar.

Remove the front bumper splitter vain finisher trims.

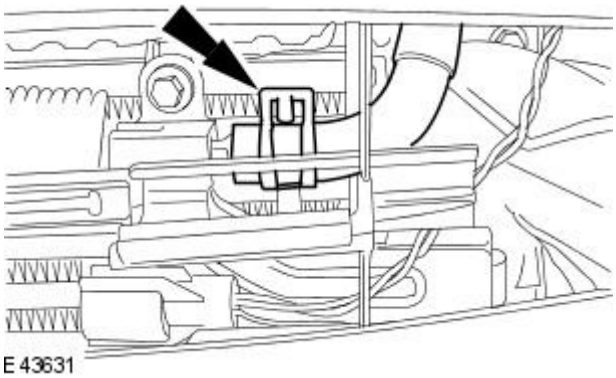

27. NOTE: Drain the fluid into a suitable container.

- NOTE: Cap the exposed ports.

Disconnect the power assisted steering hose.

28. Lower the vehicle to a suitable working height.

29. Disconnect the brake vacuum pump vacuum hose.

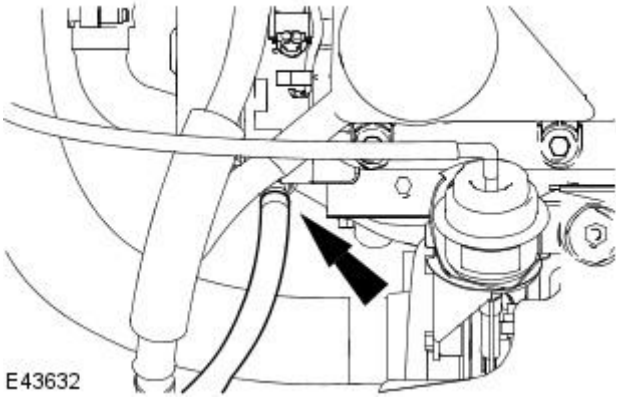

30. Disconnect the exhaust gas recirculation (E.G.R) valve module vacuum hose.

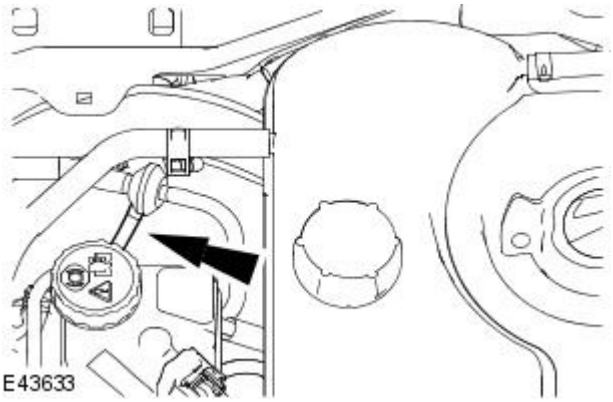

31. Disconnect the expansion tank vent hose.

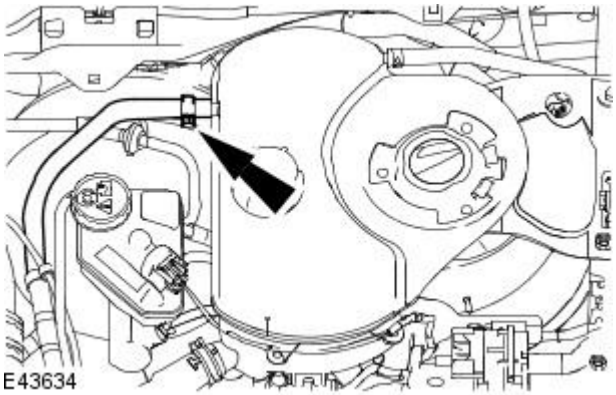

32. Detach the cooling system hose.

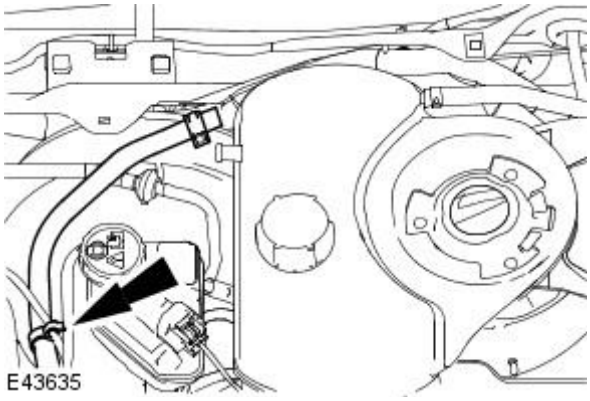

33. Disconnect the expansion tank outlet hose.

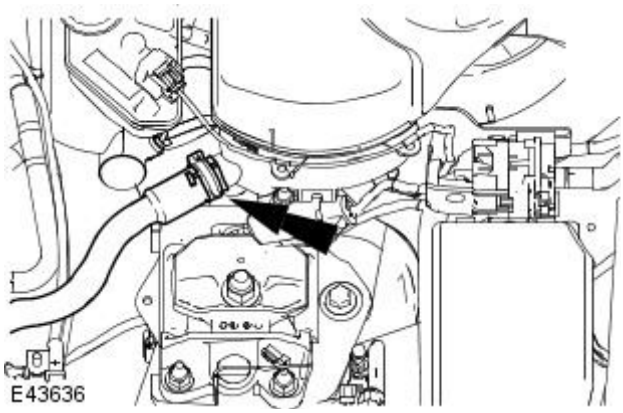

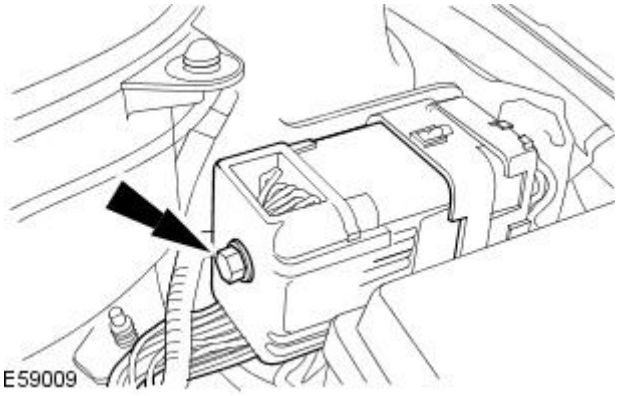

34. NOTE: The retaining bolt remains captive in the electrical connector.

Disconnect the engine harness electrical connector.

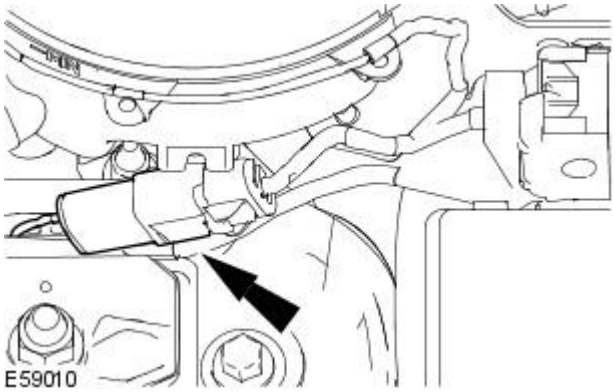

35. Disconnect the glow plug harness electrical connector.

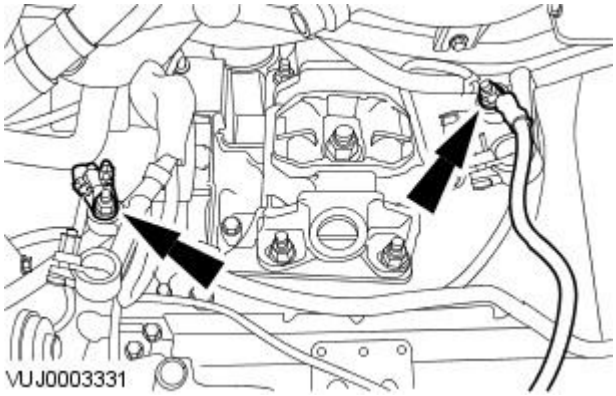

36. Disconnect the battery cables.

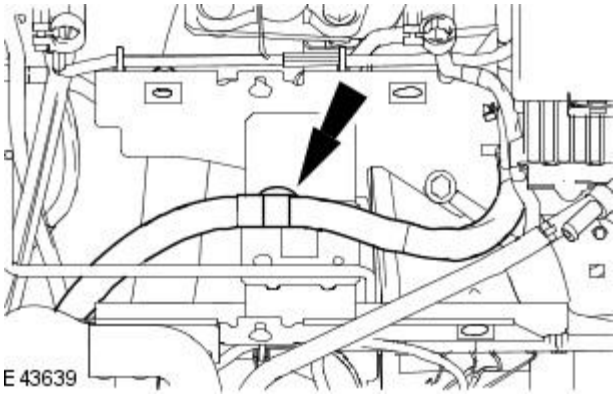

37. Detach the wiring harness from the battery tray mount.

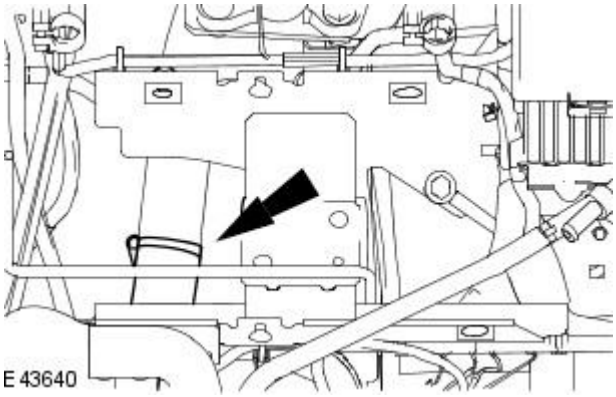

38. Disconnect the charge air cooler hose.

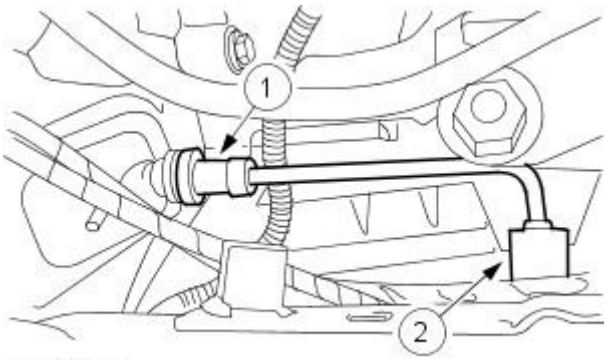

VUJ0003874

39. CAUTION: If fluid is spilt on the paintwork, the affected area must be immediately washed down with cold water. Failure to follow this instruction may result in damage to the vehicle.

- NOTE: Drain the fluid into a suitable container.
- NOTE: Cap the exposed ports.
- NOTE: Secure the clutch slave cylinder pipe using tie strap.

Disconnect the clutch slave cylinder pipe and secure to one side.

1. Detach the clutch slave cylinder pipe from the slave cylinder.
2. Disconnect the clutch slave cylinder pipe and secure to one side.

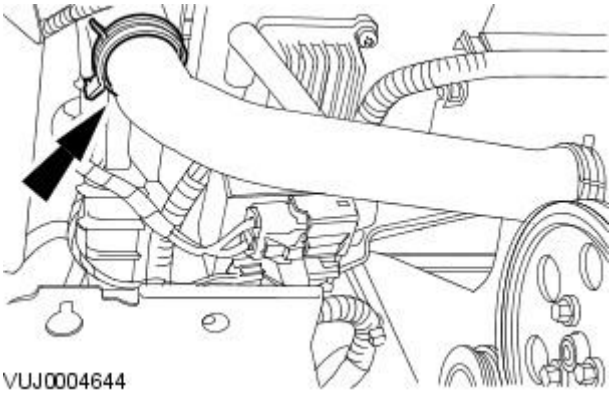
VUJ0004644

40. Disconnect the radiator upper coolant hose.

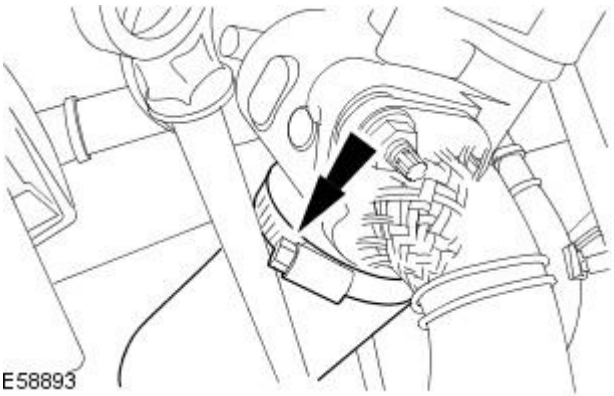
E58893

41. Disconnect the charge air cooler hose.

42. Remove the exhaust manifold to E.G.R valve tube.
For additional information, refer to: Exhaust Gas Recirculation (EGR) Cooler to EGR Valve Tube (303-08 Engine Emission Control - 2.0L Duratorq-TDCi/2.2L Duratorq-TDCi (110kW/150PS) - Puma, Removal and Installation).

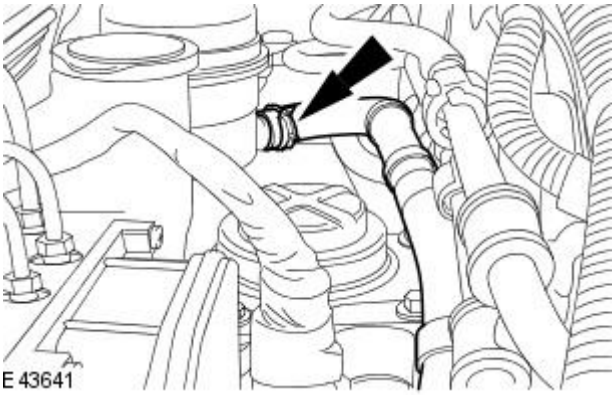
E43641

43. NOTE: Place suitable absorbent material below the fluid reservoir to absorb fluid spillage.

- NOTE: Cap the exposed ports.

Disconnect the power assisted steering hose.

www.JagDocs.com

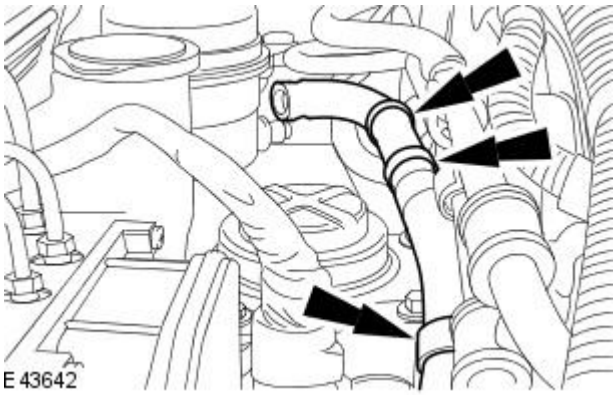

44. Detach the power assisted steering hose.

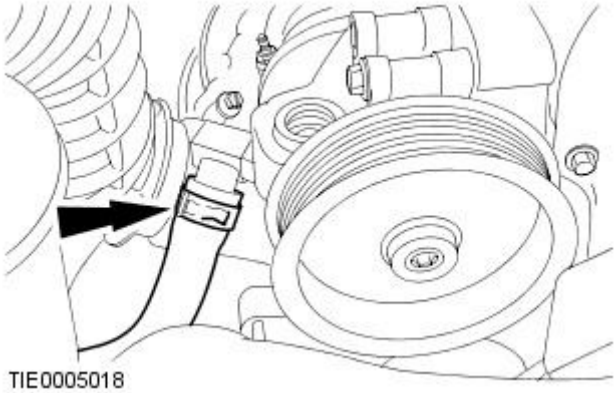

45. NOTE: Cap the exposed ports.

Disconnect the power assisted steering hose.

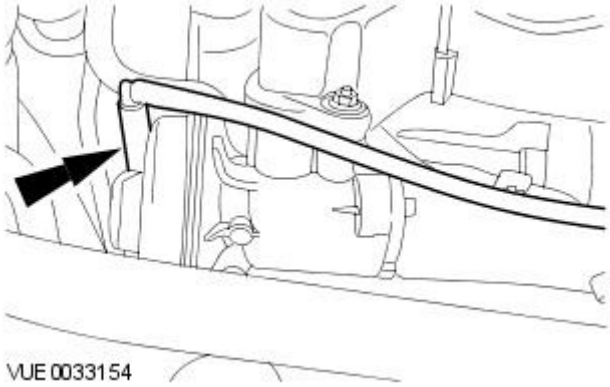

46. NOTE: Cap the exposed ports.

Disconnect the E.G.R valve vacuum pipe.

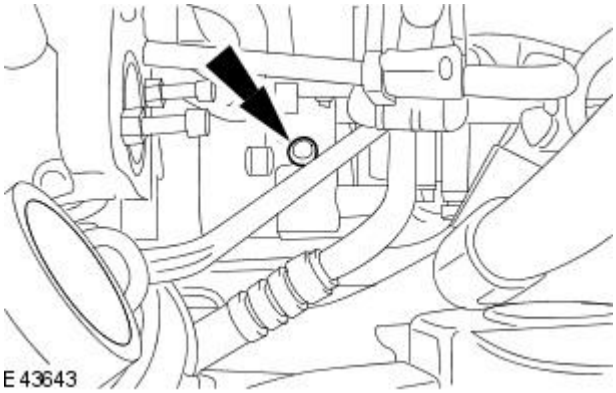

47. Loosen the air conditioning compressor line retaining bolt.

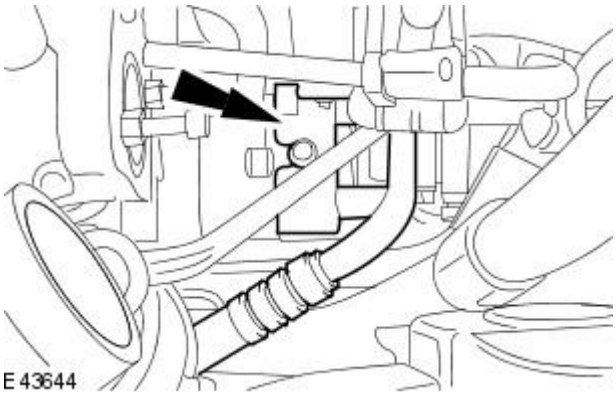

48. NOTE: Remove and discard the O-ring seals.

- NOTE: Cap the exposed ports.

Disconnect the air conditioning compressor lines.

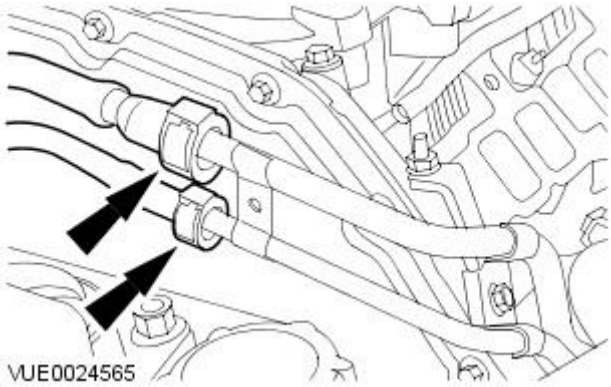

49. Disconnect the fuel lines.
For additional information, refer to: Quick Release Coupling - Push Connect (310-00 Fuel System - General Information, General Procedures).

- Install blanking plugs to the fuel pump fuel supply and fuel return line male and female connectors.

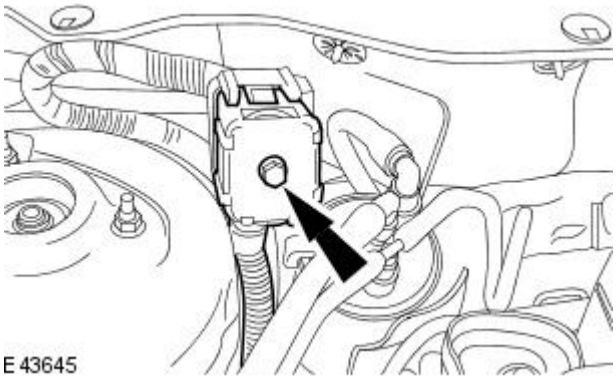

50. Disconnect the engine wiring harness electrical connector.

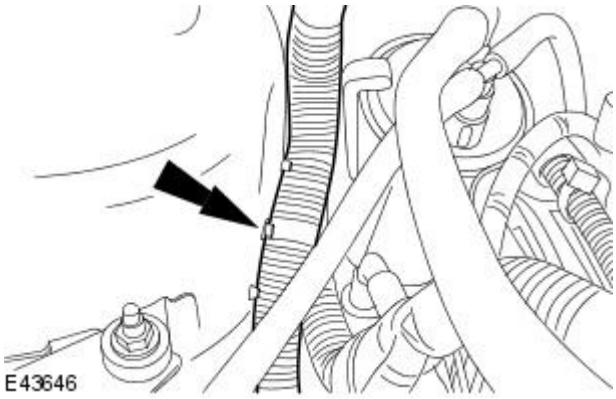

51. Detach the engine wiring harness retaining clip.

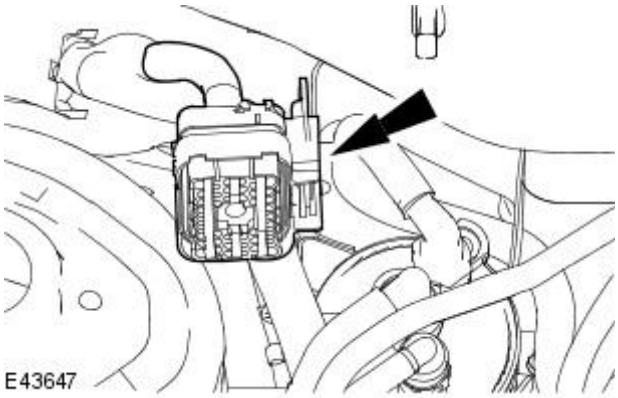

52. Detach the engine wiring harness electrical connector.

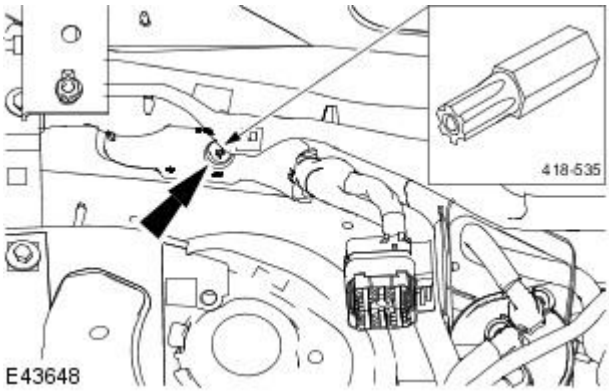

53. NOTE: Bolt remains captive in the engine control module (ECM) electrical connector.

Using the special tool, disconnect the ECM harness electrical connector.

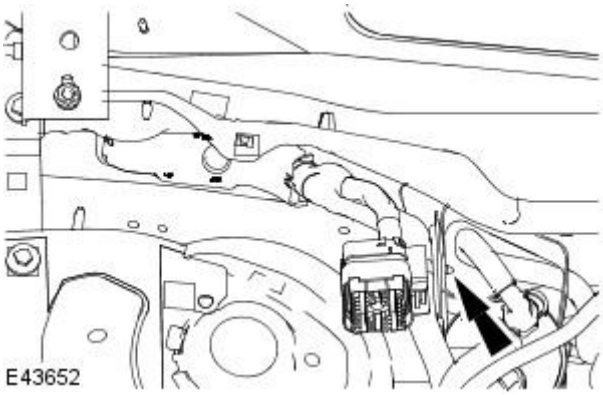

54. Detach the engine wiring harness retaining clip.

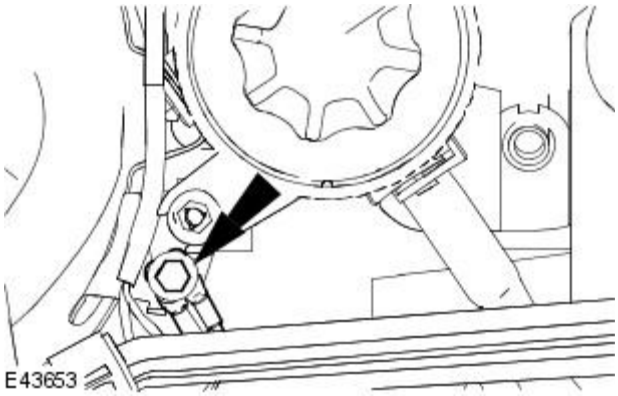

55. Detach the engine wiring harness earth lead.

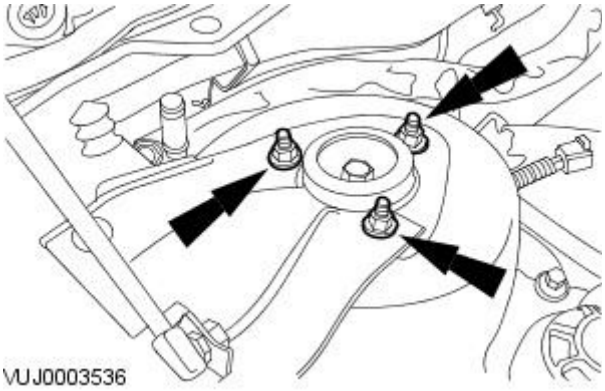

56. NOTE: Right-hand shown, left-hand similar.

Detach the strut and spring assembly.

57. Raise the vehicle.

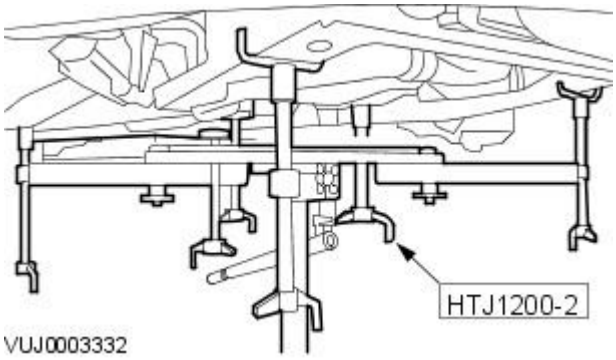

58. CAUTION: Do not support the engine and transaxle assembly directly on the oil pan.

Install the special tool.

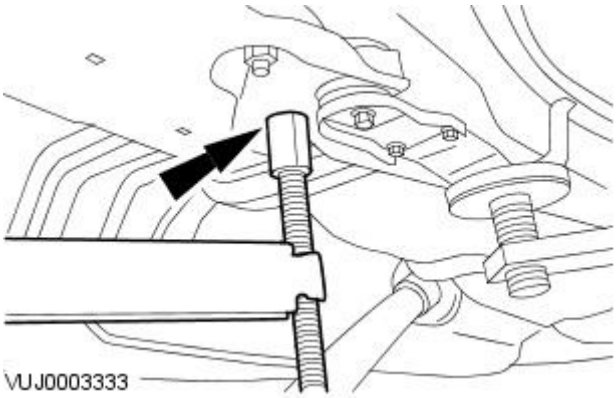

59. NOTE: Left-hand shown, right-hand similar.

Position and adjust the special tool rear height adjuster.

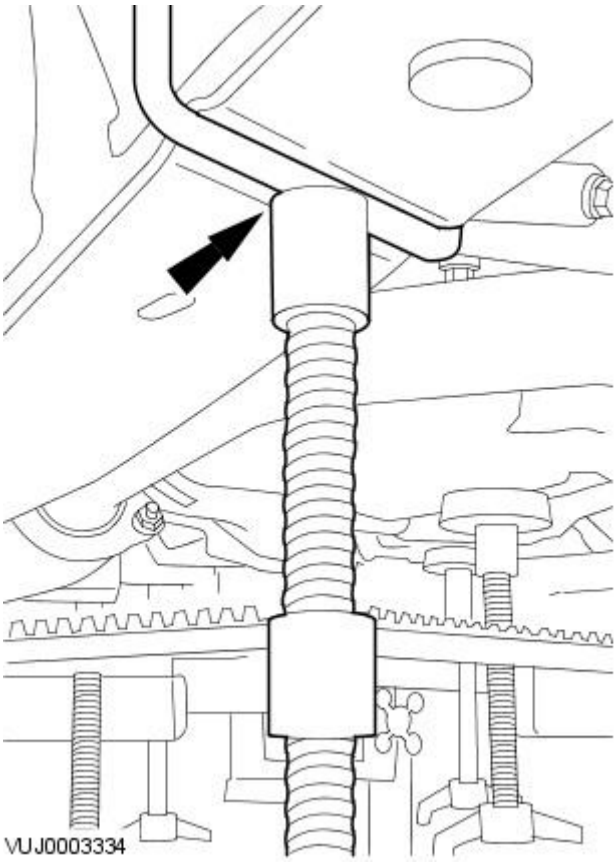

60. NOTE: Right-hand shown, left-hand similar.

Position and adjust the special tool front height adjuster.

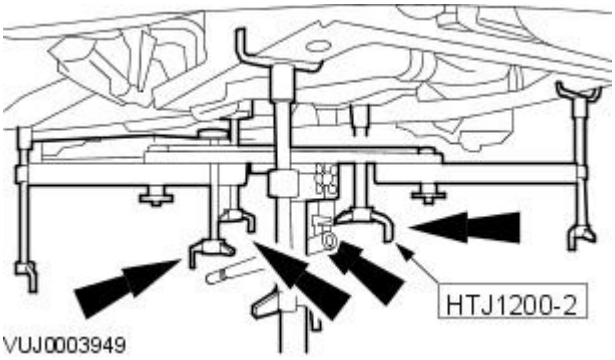

61. Position and adjust the special tool engine height adjusters.

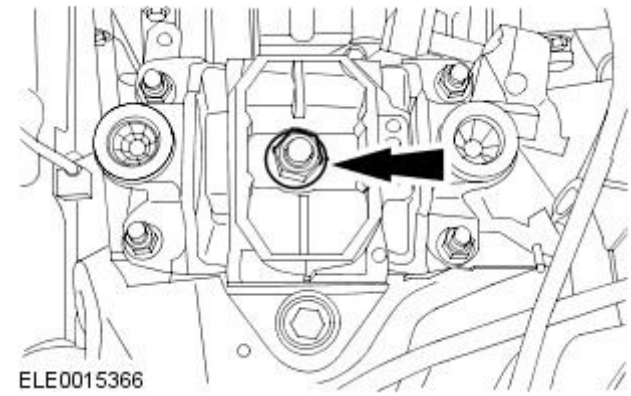

62. Remove the engine rear mount retaining nut.

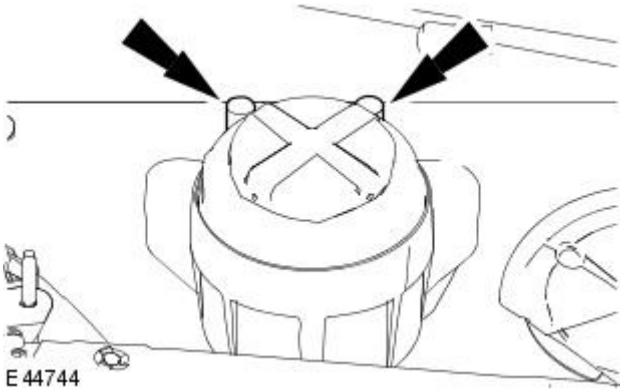

63. NOTE: Discard the retaining nuts.

Remove the engine front mount retaining nuts.

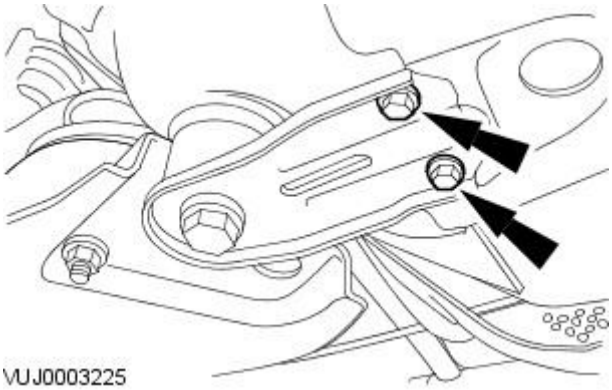

64. NOTE: Left-hand shown, right-hand similar.

Remove the front subframe reinforcement plate retaining bolts.

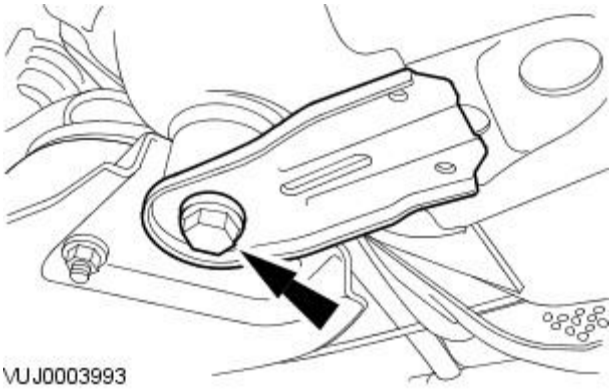

65. NOTE: Left-hand shown, right-hand similar.

Remove the front subframe reinforcement plate.

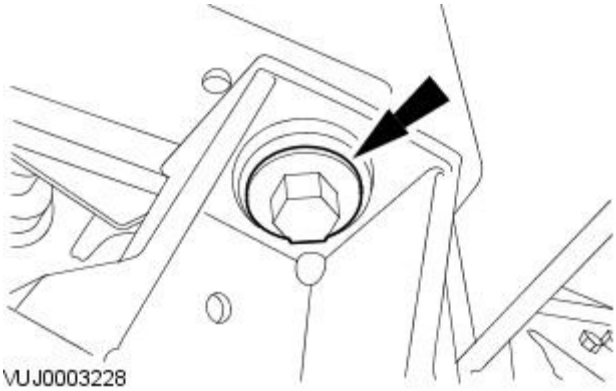

66. NOTE: Left-hand shown, right-hand similar.

Detach the front subframe.

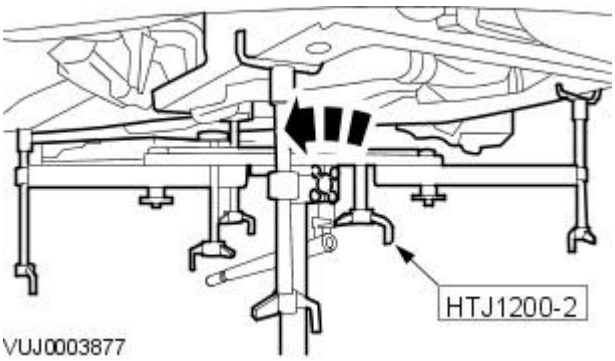

67. WARNING: Rotate the special tool height adjustment valve slowly. Failure to follow this instruction may result in personal injury.

Remove the engine, suspension and transmission assembly.

- Rotate the special tool height adjustment valve counter clockwise.

68. CAUTION: Do not support the engine and transaxle assembly directly on the oil pan. Failure to follow this instruction may cause damage to the component.

Place the engine, suspension and transmission assembly to a suitable working area.

69. Detach the engine harness.

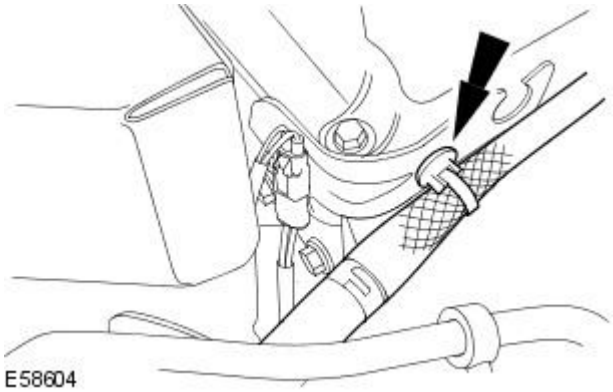

70. Detach the electrical connector.

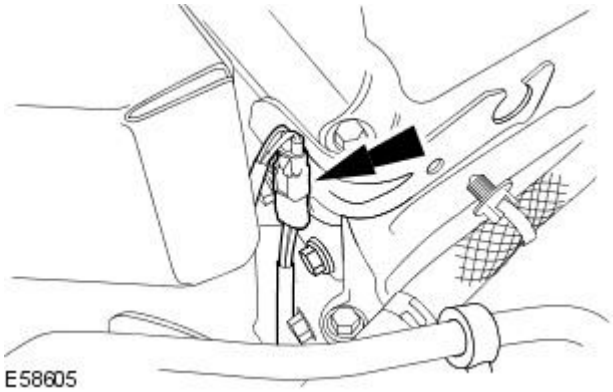

71. Remove the engine cover rear mount bracket.

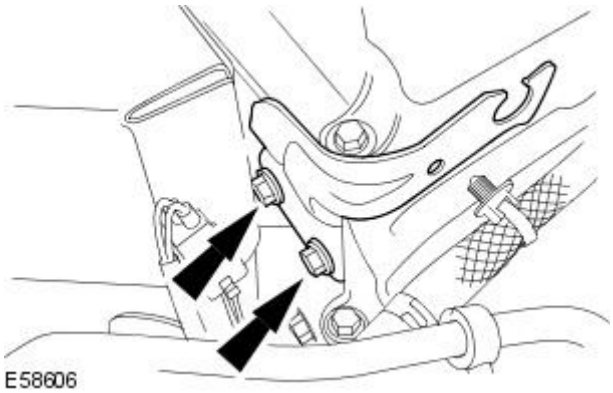

72. Install the engine rear lifting eye.

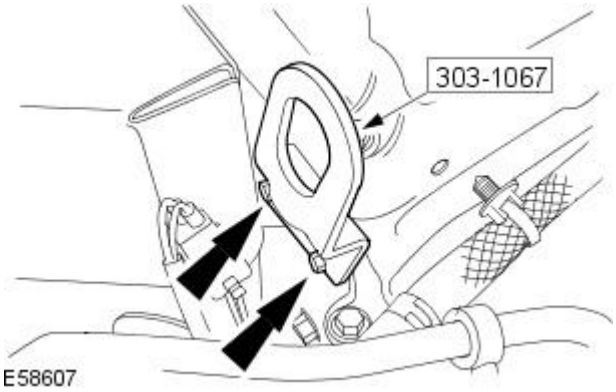

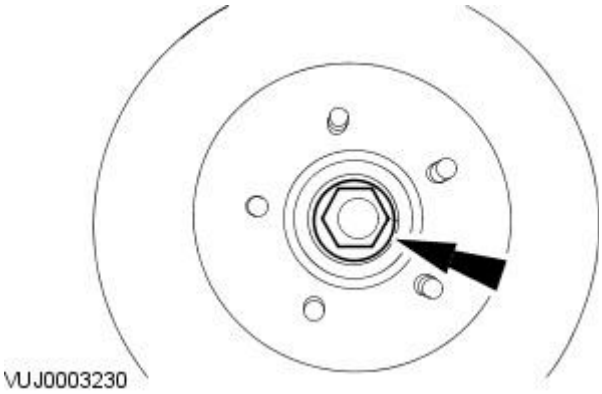

73. NOTE: Left-hand shown, right-hand similar.

Remove and discard the wheel hub nuts.

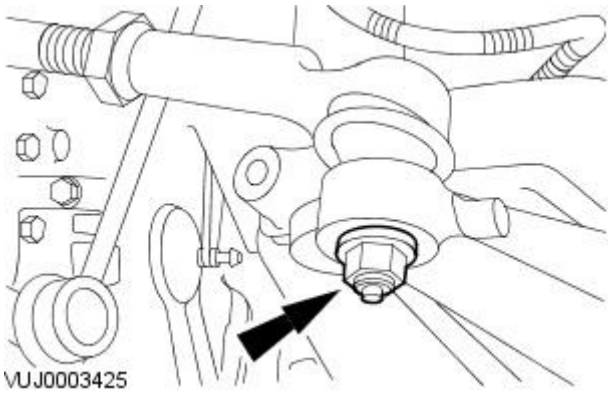

74. CAUTION: When the tie-rod end is separated from the wheel hub assembly, the ball joint seal should be protected to prevent damage.

- NOTE: Left-hand shown, right-hand similar.

Remove and discard the tie rod-end retaining nuts.

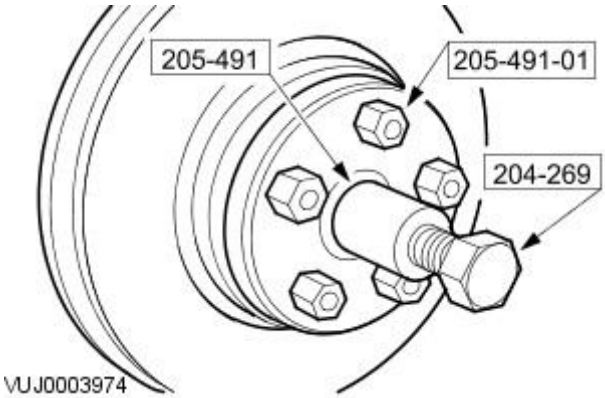

75. NOTE: Left-hand shown, right-hand similar.

Using the special tools, detach the drive halfshaft.

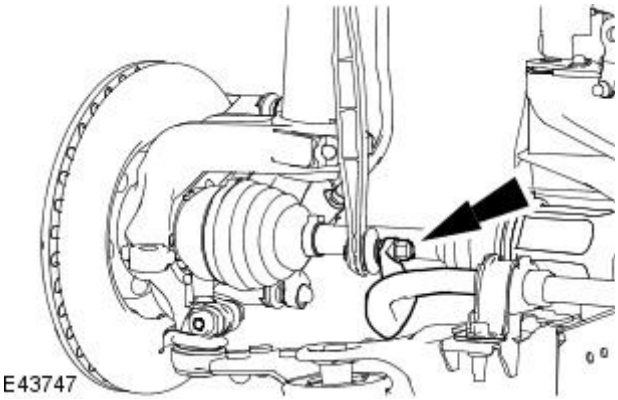

76. NOTE: Left-hand shown, right-hand similar.

Remove the anti-roll bar link retaining nut.

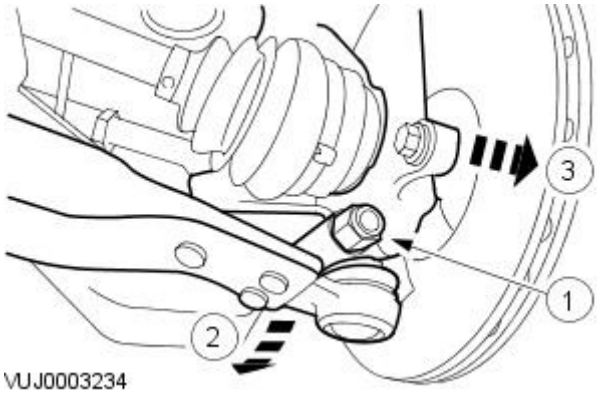

77. NOTE: Left-hand shown, right-hand similar.

Remove the wheel knuckle and strut.

1. Remove and discard the lower arm ball joint retaining nut and bolt.
2. Reposition the lower arms.
3. Remove the wheel knuckle and strut.

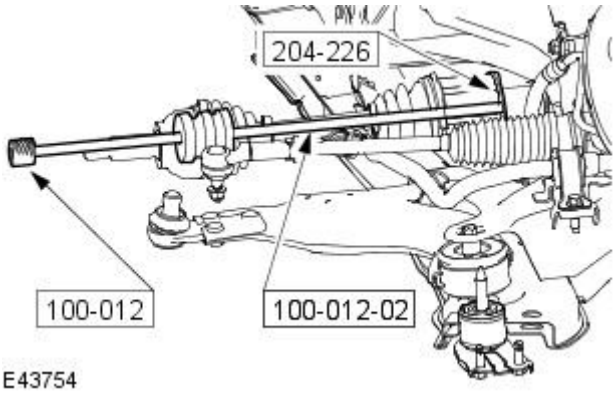

78. Using the special tools, remove the drive halfshaft.

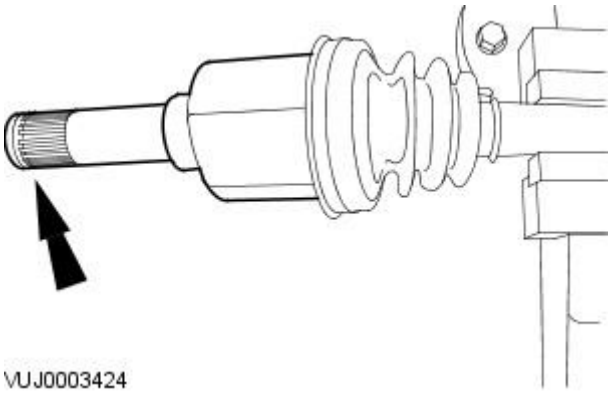

79. Remove and discard the drive halfshaft snap ring.

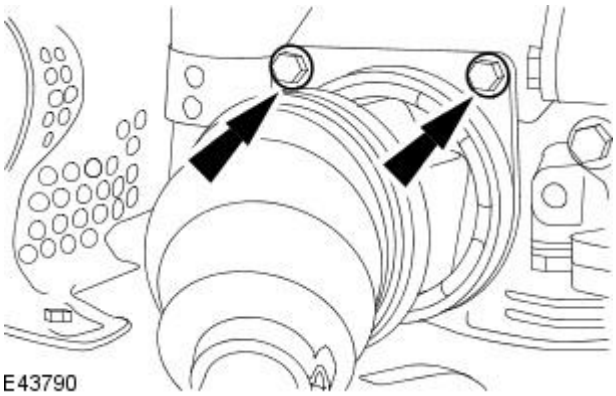

80. Remove the drive halfshaft.

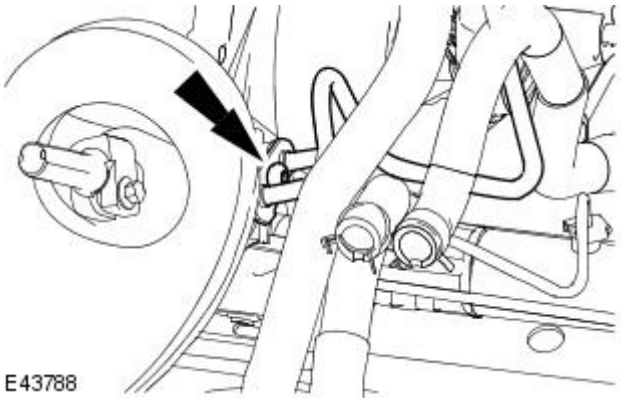

81. NOTE: Discard the O-ring seals.

- NOTE: Cap the exposed ports.

Disconnect the power steering lines.

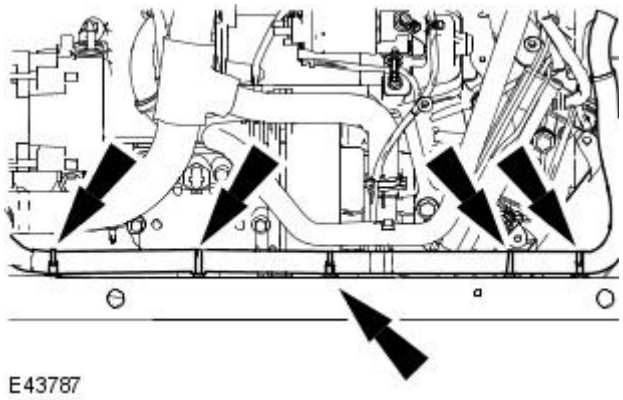

82. Detach the wiring harness.

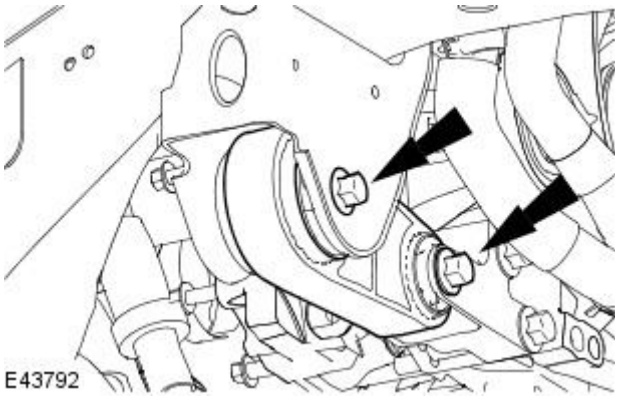

83. Remove the engine roll restrictor.

84. CAUTION: Do not support the engine and transaxle assembly directly on the oil pan. Failure to follow this instruction may cause damage to the component.

Using a suitable hydraulic lift, remove the engine and transmission from the subframe and place to a suitable working area.

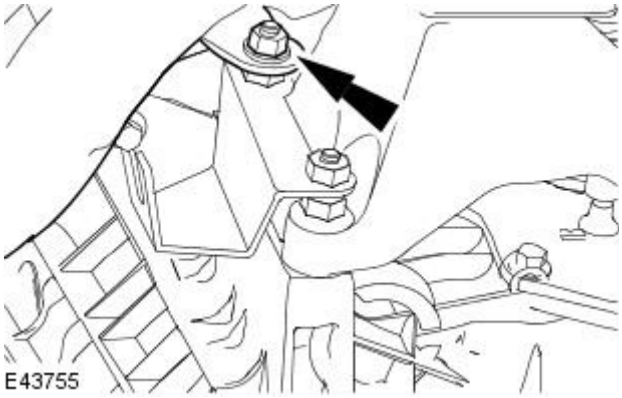

85. Remove the charge air cooler pipe retaining nut.

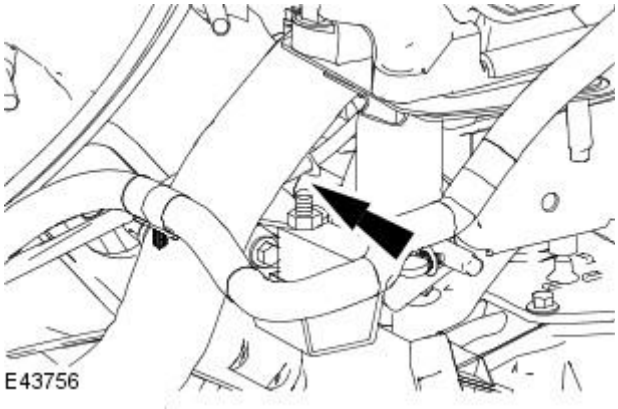

86. Detach the reverse lamp switch wiring harness retaining clip.

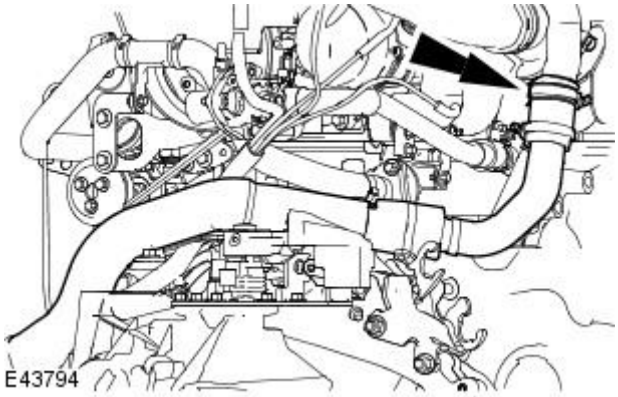

87. Remove the charge air cooler pipe.

88. Disconnect the reverse lamp switch electrical connector.

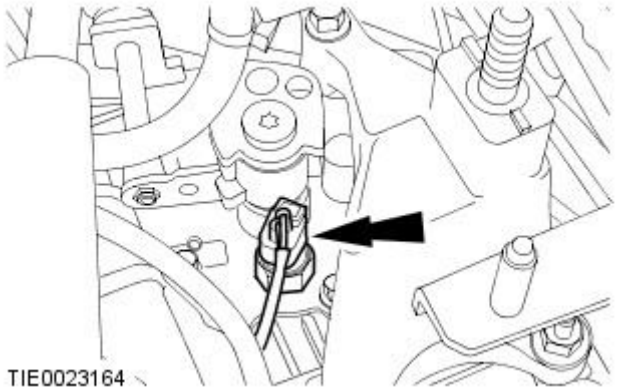

89. Remove the vacuum regulator solenoid valve.

1. Disconnect the electrical connectors.
2. Detach the vacuum hoses.
3. Remove the vacuum regulator solenoid valve.

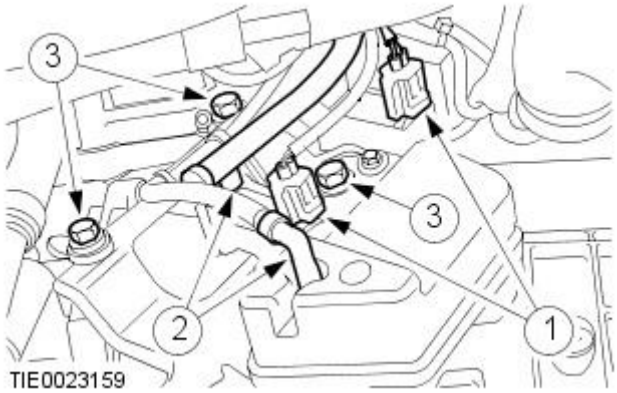

90. Detach the starter motor wiring harness.

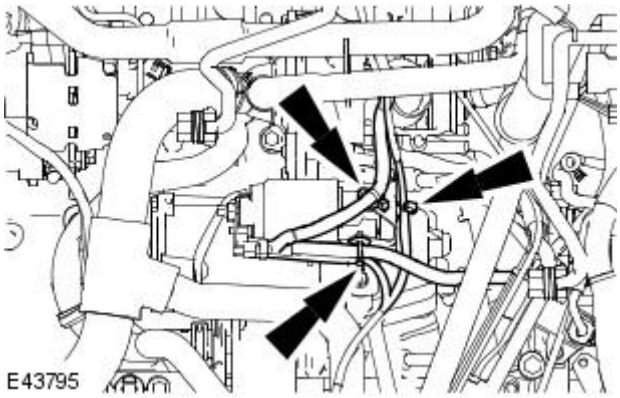

91. Remove the starter motor wiring harness retaining bracket.

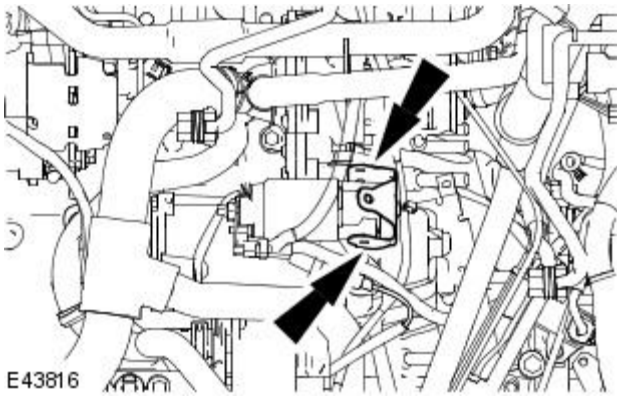

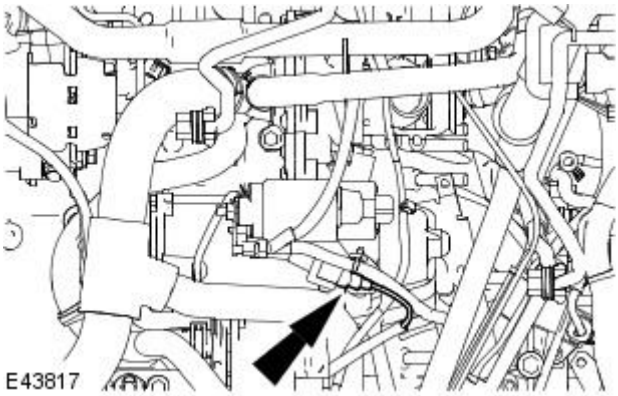

92. Disconnect the starter motor wiring harness electrical connector.

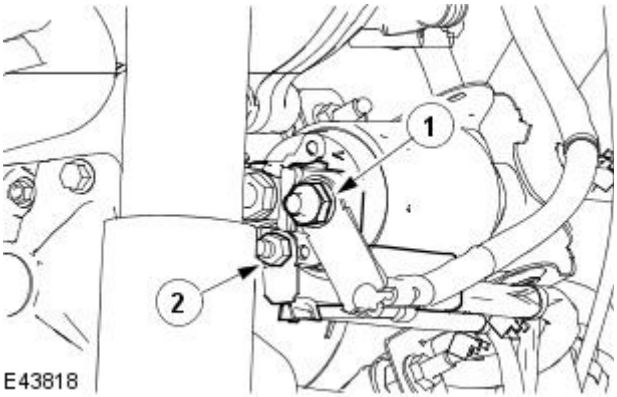

93. Detach the starter motor wiring harness.

1. Disconnect the starter motor electrical connector.
2. Disconnect the starter motor solenoid electrical connector.

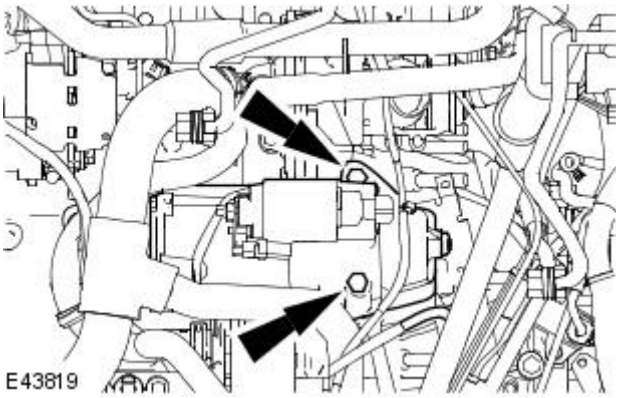

94. Remove the starter motor.

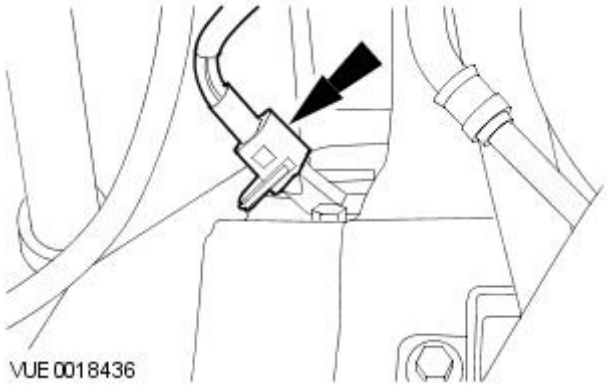

95. Disconnect the crankshaft sensor electrical connector.

96. Remove the transmission upper retaining bolts.

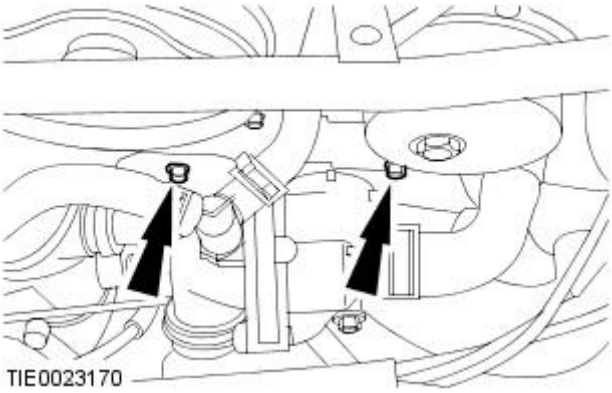

97. Remove the transmission right-hand retaining bolts.

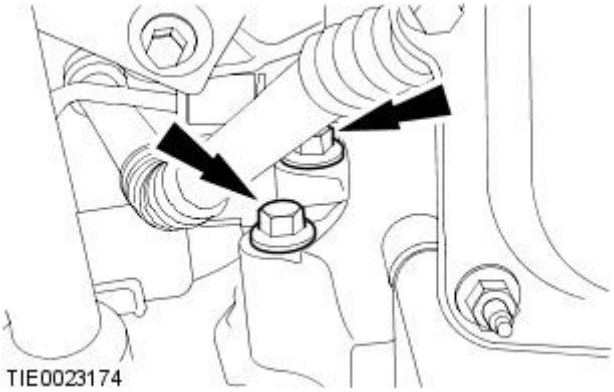

98. CAUTION: Do not support the engine and transaxle assembly directly on the oil pan. Failure to follow this instruction may cause damage to the component.

Remove the engine assembly from the transmission assembly.

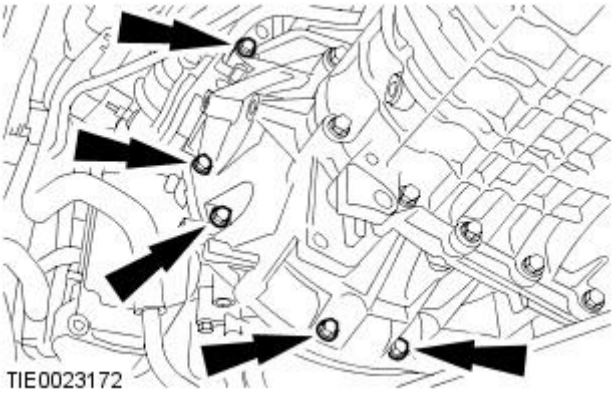

Engine - 2.0L Duratorq-TDCi / 2.2L Duratorq-TDCi (110kW / 150PS) - Puma - Engine2.2L Duratorq-TDCi (110kW / 150PS) - Puma

Removal

Special Tool(s)	
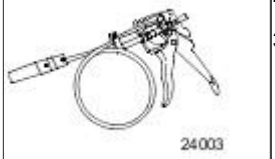 24003	Remover/Installer, Cooling Hose Clamp 303-397 (24-003)
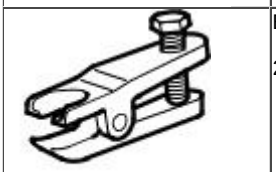 204-192	Ball joint splitter 204-192
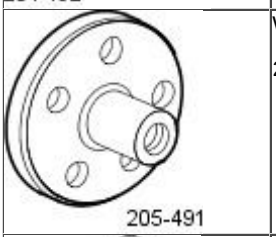 205-491	Wheel hub puller 205-491
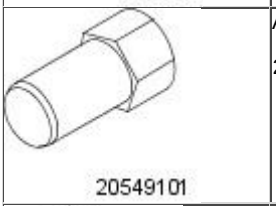 20549101	Adaptor nuts 205-491-01
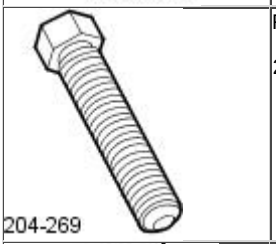 204-269	Forcing screw 204-269
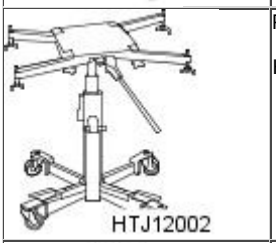 HTJ12002	Powertrain assembly jack HTJ1200-02
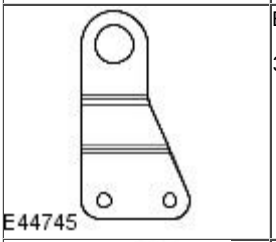 E44745	Engine lifting eye 303-1067
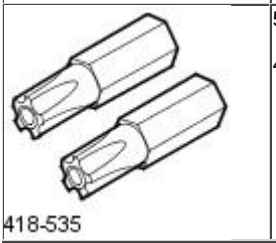 418-535	5 Point Security Torx Bit 418-535

Removal

All vehicles

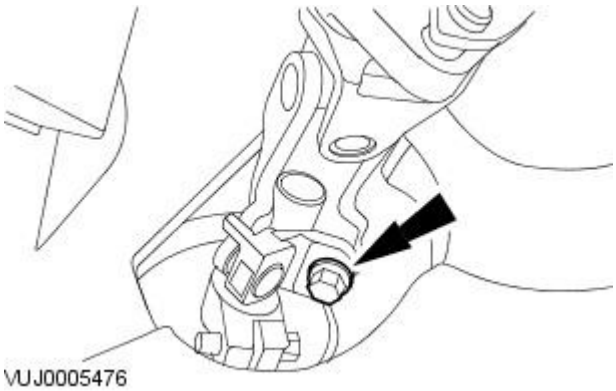

1. Remove and discard the steering column lower retaining bolt.

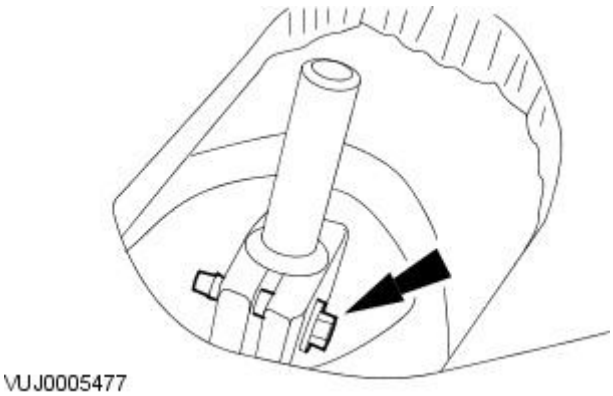

2. Remove the steering column coupling.

3. Remove the battery tray.
   For additional information, refer to: Battery Tray (414-01 Battery, Mounting and Cables, Removal and Installation).
4. Recover the air conditioning refrigerant.
   For additional information, refer to: Air Conditioning (A/C) System Recovery, Evacuation and Charging (412-00 Climate Control System - General Information, General Procedures).
5. Drain the cooling system.
   For additional information, refer to: Cooling System Draining, Filling and Bleeding (303-03B Engine Cooling - 2.0L Duratorq-TDCi/2.2L Duratorq-TDCi (110kW/150PS) - Puma, General Procedures).
6. Remove the exhaust flexible pipe.
   For additional information, refer to: Exhaust Flexible Pipe - 2.0L Duratorq-TDCi/2.2L Duratorq-TDCi (110kW/150PS) - Puma (309-00 Exhaust System, Removal and Installation).

Vehicles without auxiliary heating

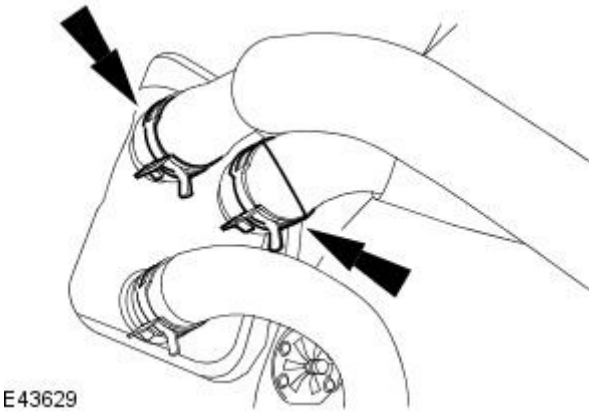

7. Disconnect the heater hoses from the heater core.

Vehicles with electric booster heater

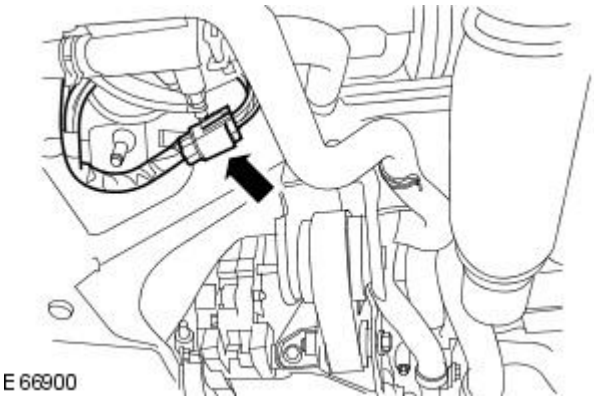

8. Detach the electric booster heater electrical connector from the subframe retaining tang.

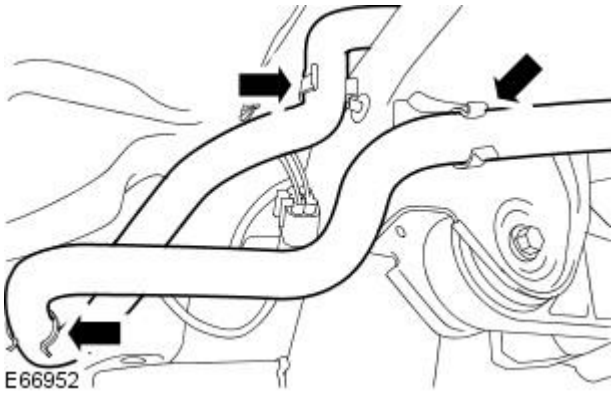

9. Detach the coolant hoses from the retaining clips.

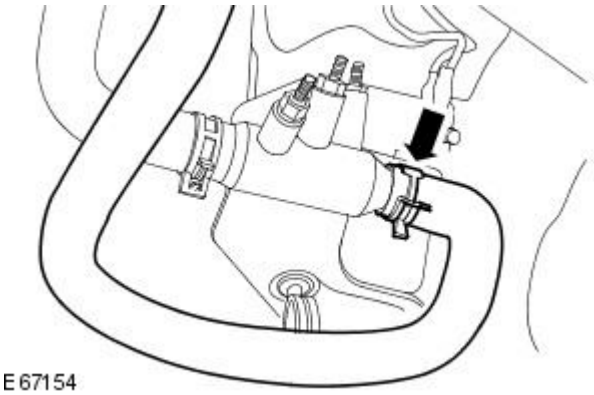

10. Detach the coolant hose.

- Disconnect the coolant hose.

Vehicles with fuel fired booster heater

11. Disconnect the fuel fired booster heater electrical connector from the subframe retaining tang.

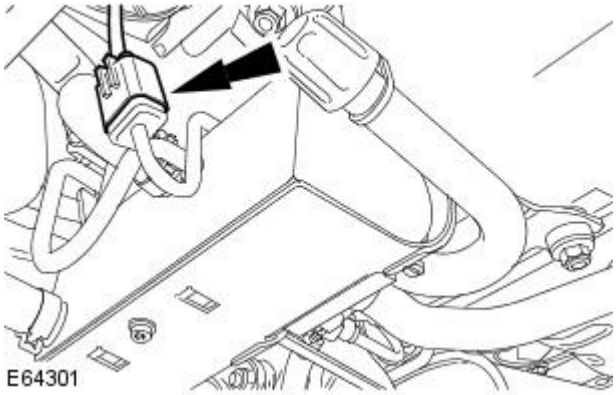

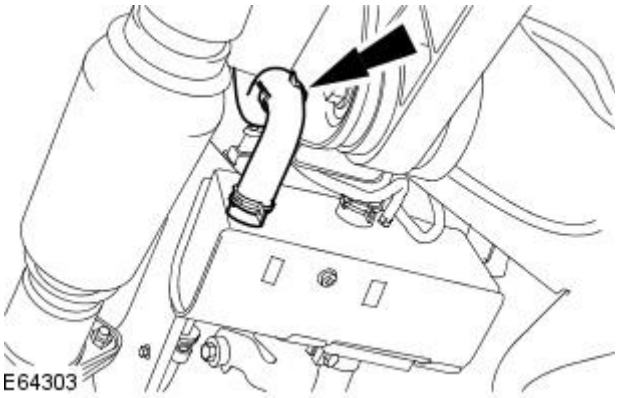

12. Detach the coolant hose.

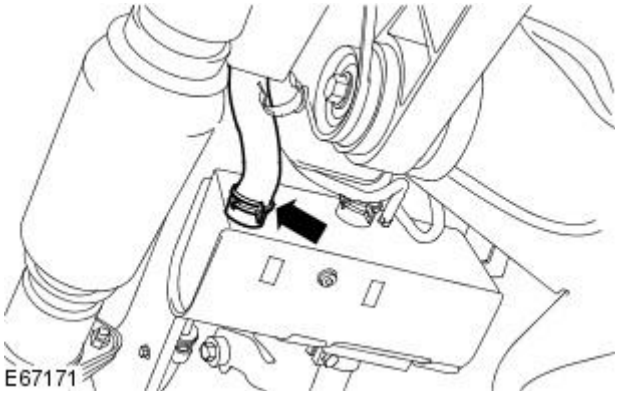

13. Disconnect the coolant hose.

All vehicles

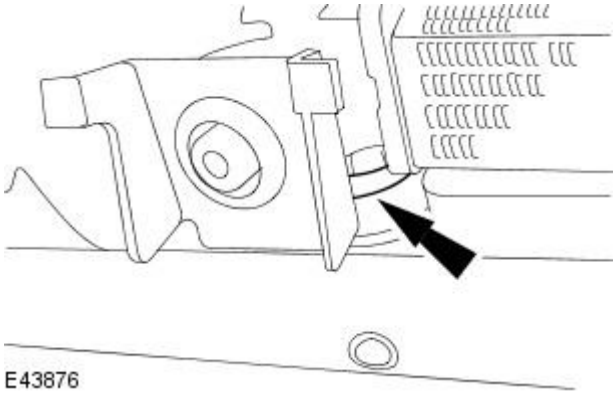

14. Disconnect the radiator lower coolant hose.

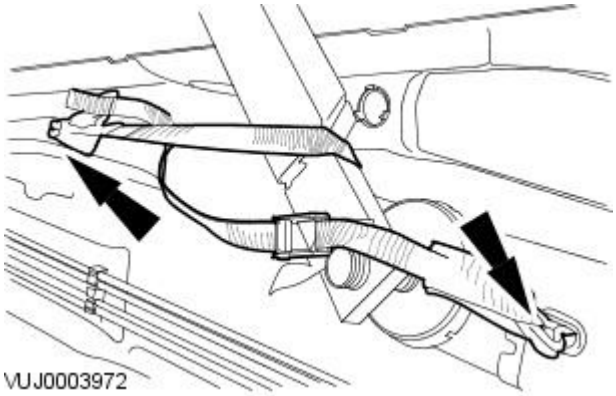

15. CAUTION: To prevent the vehicle becoming unstable when the engine and transmission assembly are removed, install the vehicle tie-down straps. Failure to follow this instruction may result in damage to the vehicle.

- NOTE: Right-hand shown, left-hand similar.

Install the front vehicle tie down straps.

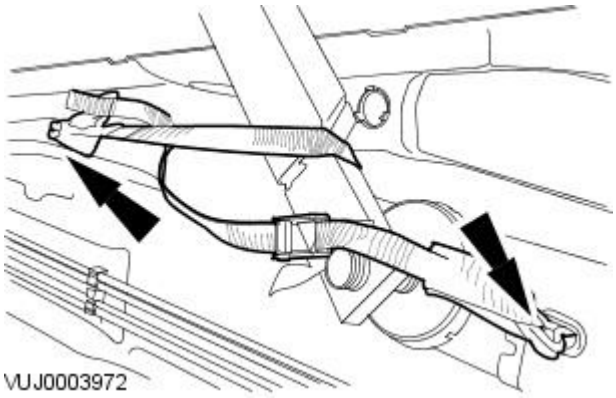

16. CAUTION: To prevent the vehicle becoming unstable when the engine and transmission assembly are removed, install the vehicle tie-down straps. Failure to follow this instruction may result in damage to the vehicle.

- NOTE: Right-hand shown, left-hand similar.

Install the rear vehicle tie down straps.

17. Lower the vehicle to a suitable working height.

18. Remove the front brake pads.
For additional information, refer to: Brake Pads (206-03 Front Disc Brake, Removal and Installation).

19. NOTE: Left-hand shown, right-hand similar.

Remove and discard the brake caliper anchor plate retaining bolts.

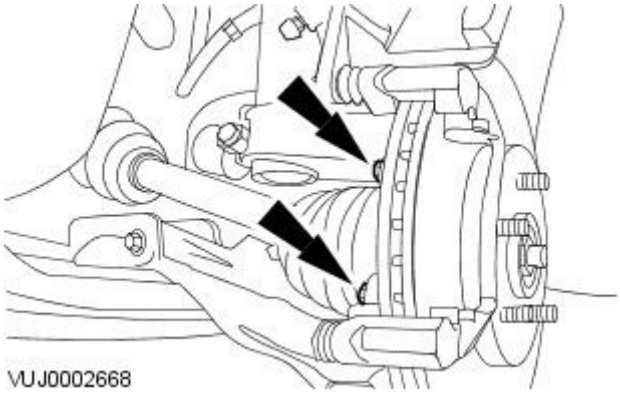

20. NOTE: Left-hand shown, right-hand similar.

Detach the brake caliper and brake caliper anchor plate assembly.

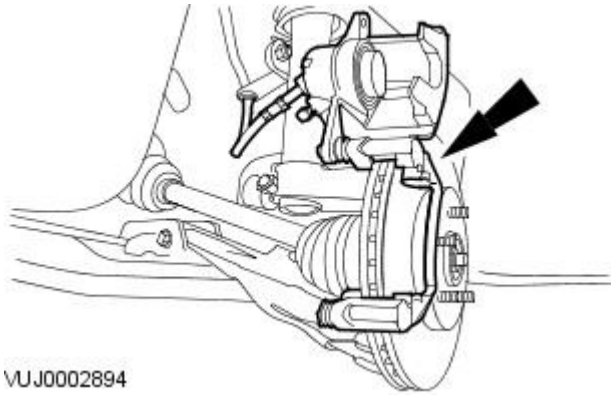

21. NOTE: Right-hand shown, left-hand similar.

Remove the wheel arch liner access cover.

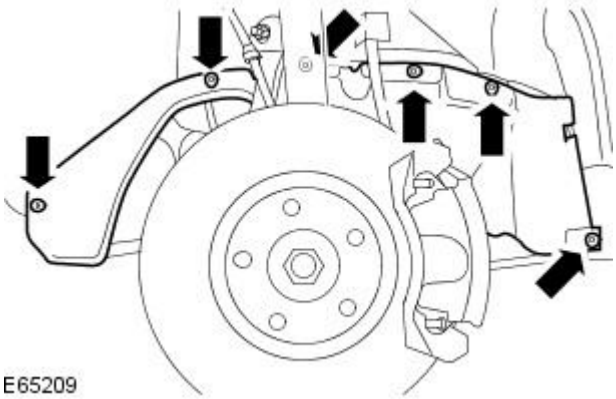

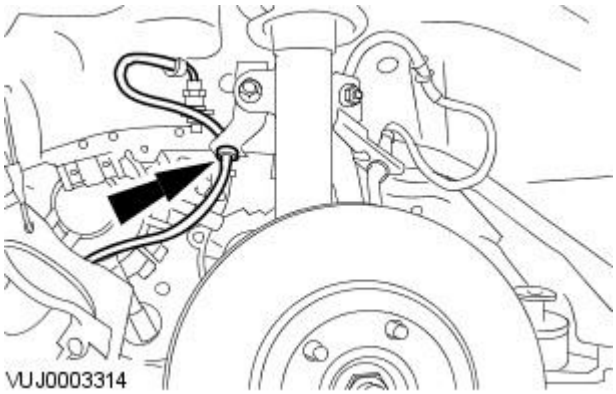

22. NOTE: Left-hand shown, right-hand similar.

Detach the brake pipe.

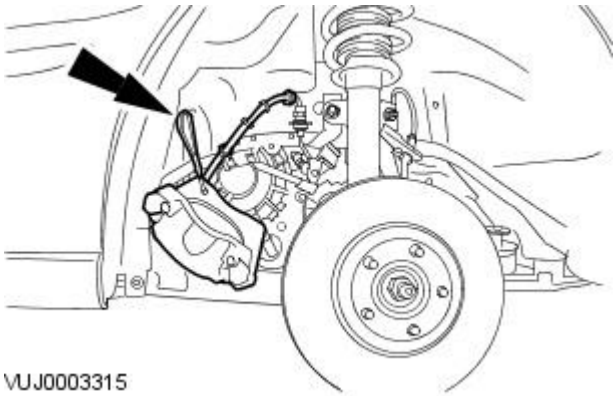

23. CAUTION: Support the brake caliper assembly using tie straps. Failure to follow this instruction may result in damage to the vehicle.

- NOTE: Left-hand shown, right-hand similar.

Reposition and attach the brake caliper assembly.

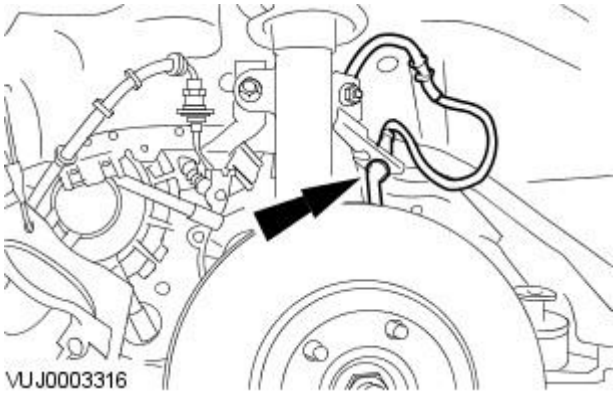

24. NOTE: Left-hand shown, right-hand similar.

Detach the anti-lock braking system (ABS) wheel speed sensor.

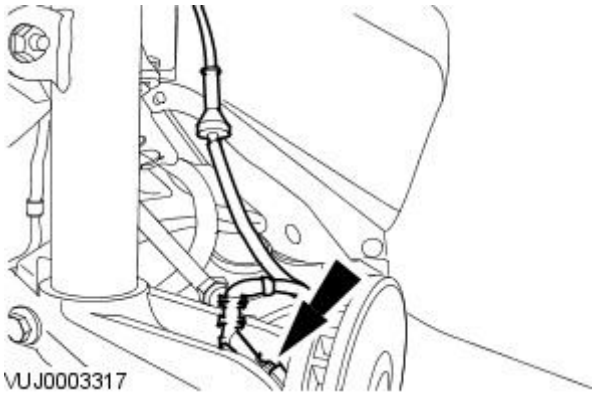

25. NOTE: Left-hand shown, right-hand similar.

Disconnect the ABS wheel speed sensor.

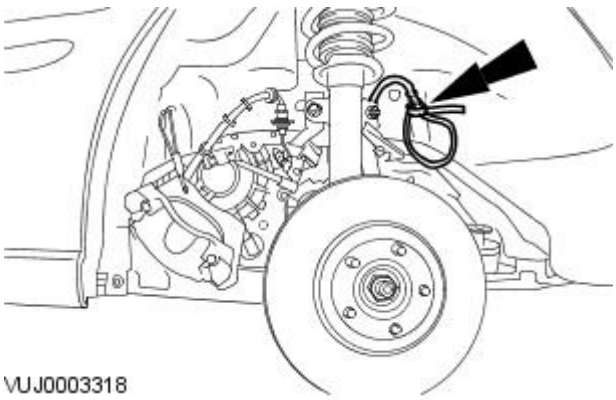

26. CAUTION: Secure the ABS wheel speed sensor using tie straps. Failure to follow this instruction may result in damage to the vehicle.

- NOTE: Left-hand shown, right-hand similar.

Reposition and attach the ABS wheel speed sensor.

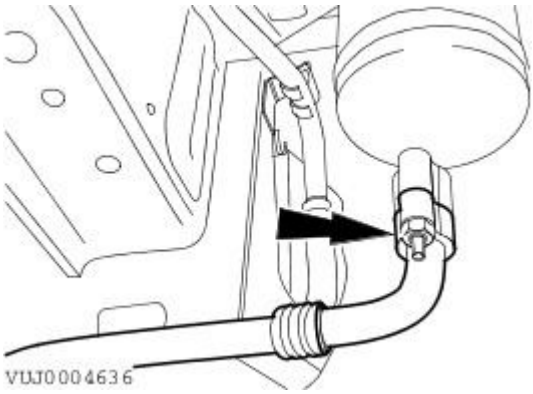

27. NOTE: Remove and discard the O-ring seal.

- NOTE: Cap the exposed ports.

Disconnect the suction accumulator pipe.

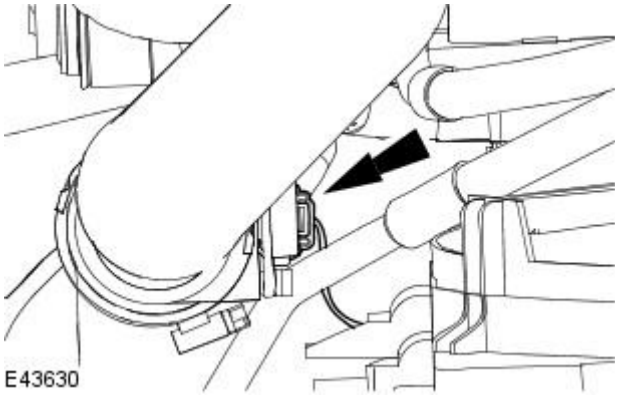

28. Disconnect the air temperature sensor electrical connector.

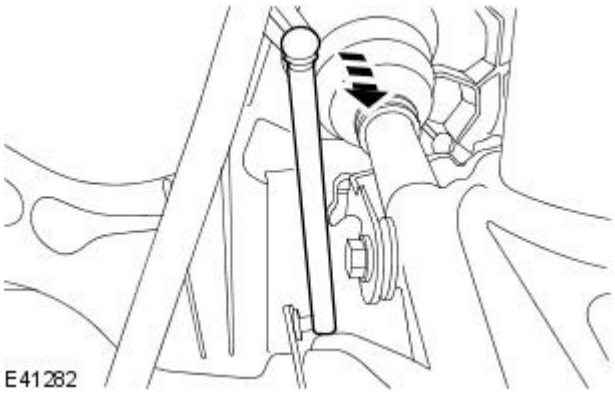

29. Disconnect the high intensity discharge (H.I.D) sensor drop arm.

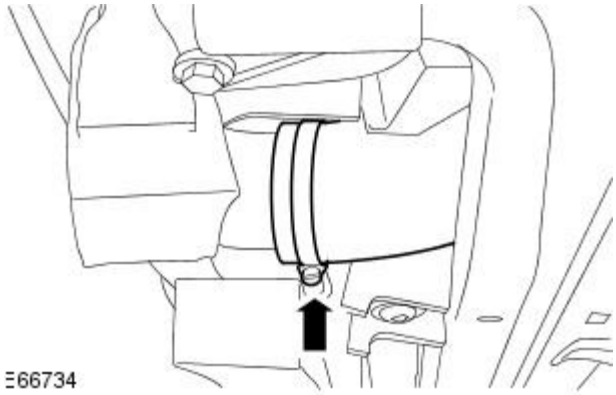

30. Detach the charge air cooler outlet hose from the charge air cooler.

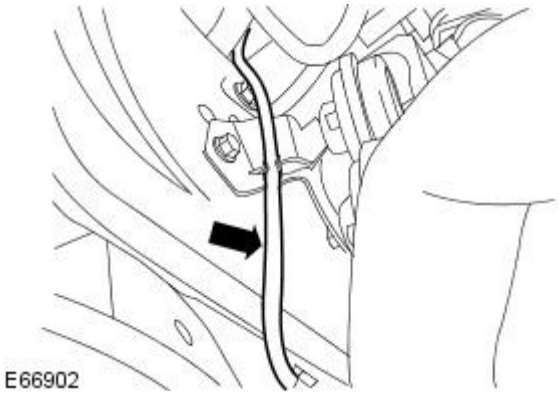

31. Detach the battery breather hose.

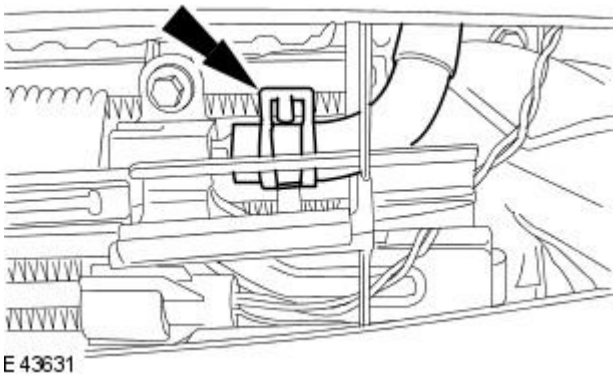

32. NOTE: Drain the fluid into a suitable container.

• NOTE: Cap the exposed ports.

• NOTE: Use care when repositioning power assisted steering hose.

Disconnect the power assisted steering hose.

- Remove the power assisted steering hose retaining clip.
- Reposition the power assisted hose through the radiator side seal.

33. Lower the vehicle to a suitable working height.

34. Disconnect the brake vacuum pump vacuum hose.

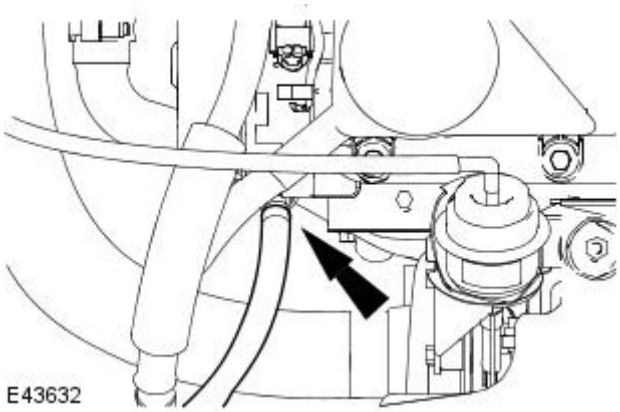

35. Disconnect the exhaust gas recirculation (EGR) valve module vacuum hose.

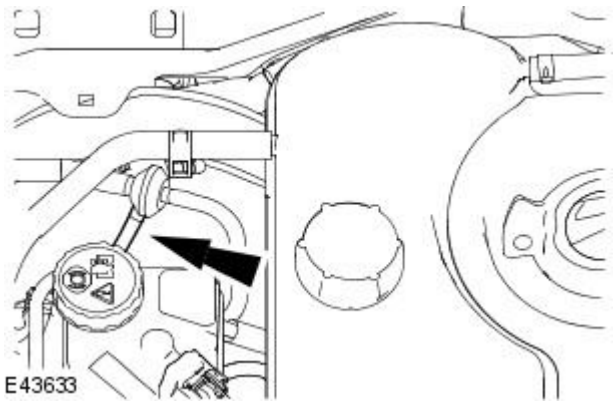

36. Disconnect the expansion tank vent hose.

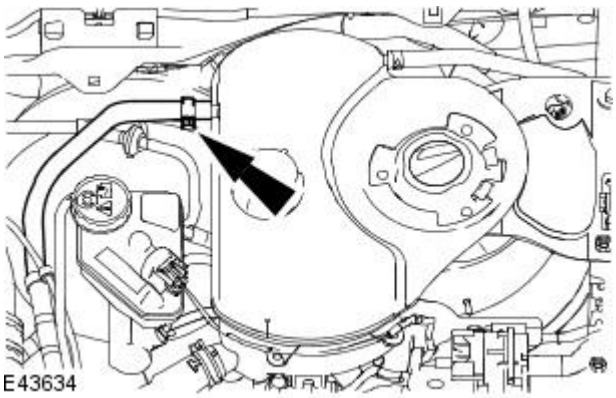

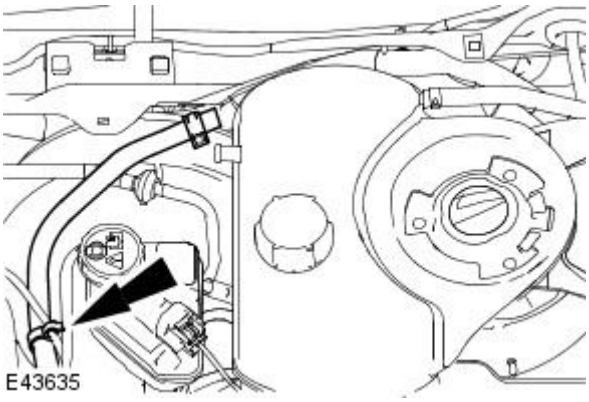

37. Detach the cooling system hose.

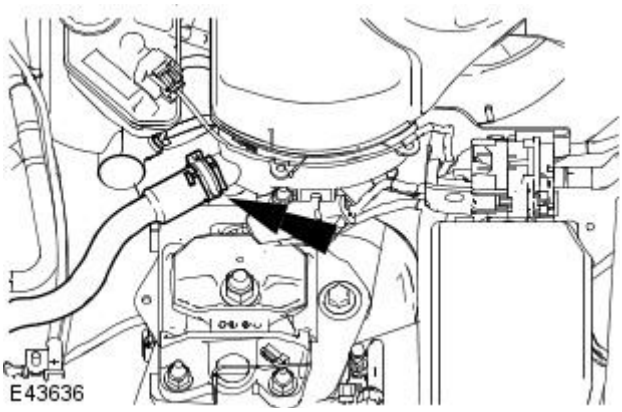

38. Disconnect the expansion tank outlet hose.

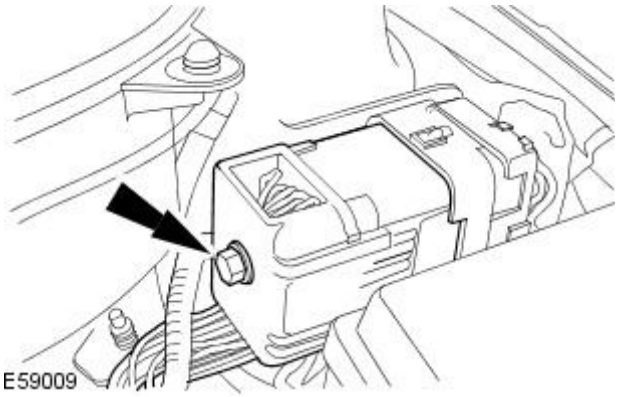

39. NOTE: The retaining bolt remains captive in the electrical connector.

Disconnect the engine harness electrical connector.

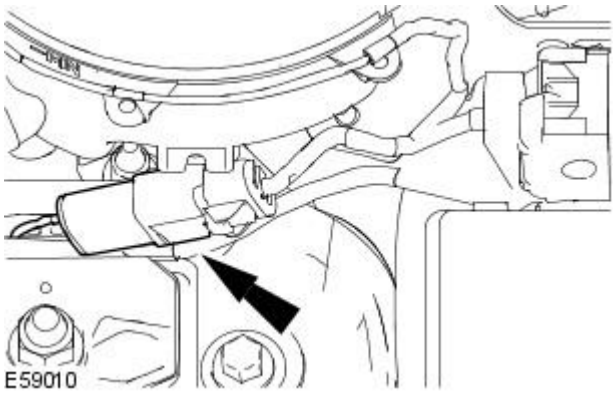

40. Disconnect the glow plug harness electrical connector.

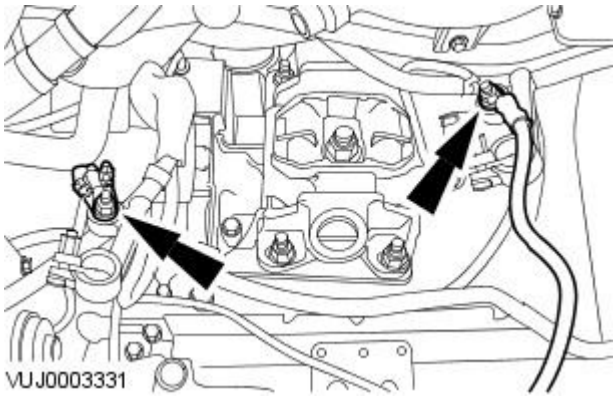

41. Disconnect the battery cables.

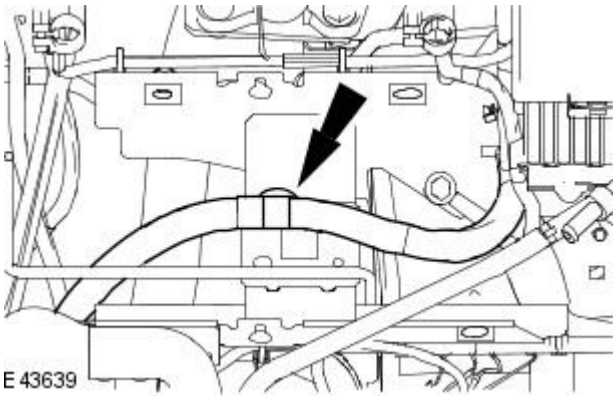

42. Detach the wiring harness from the battery tray mount.

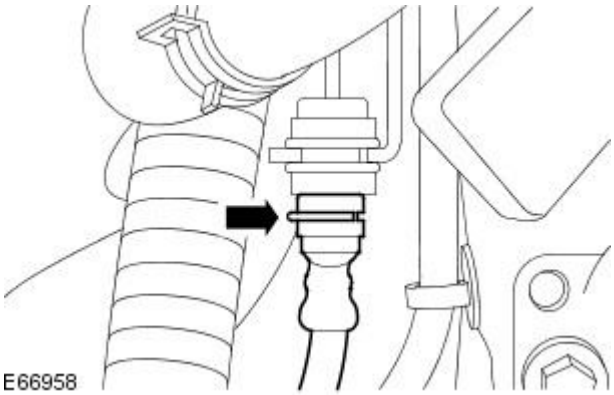

43. CAUTION: If fluid is spilt on the paintwork, the affected area must be immediately washed down with cold water. Failure to follow this instruction may result in damage to the vehicle.

- NOTE: Drain the fluid into a suitable container.
- NOTE: Cap the exposed ports.
- NOTE: Secure the clutch slave cylinder hose using a tie strap.

Detach the clutch slave cylinder hose from the clutch slave cylinder pipe.

- Release the clutch slave cylinder hose retaining clip.
- Disconnect the clutch slave cylinder hose and secure to one side.

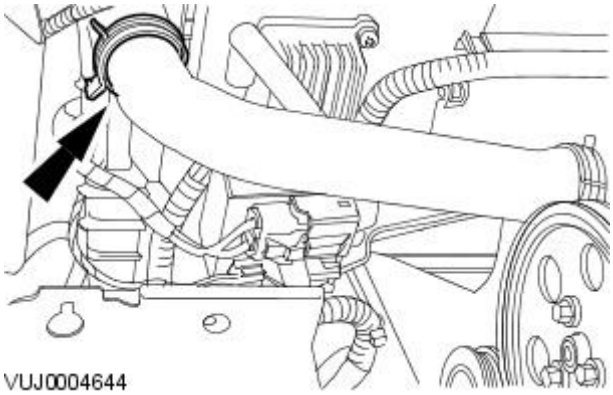

44. Disconnect the radiator upper coolant hose.

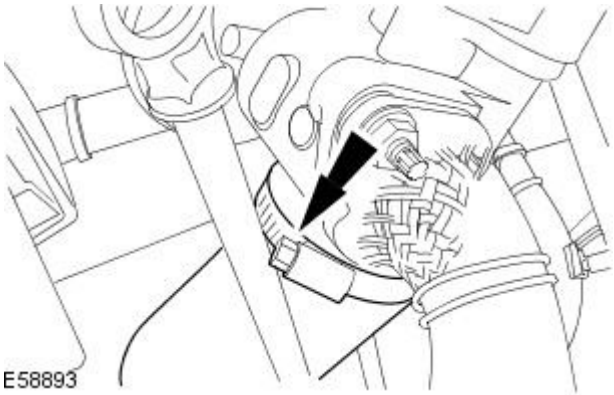

45. Disconnect the charge air cooler hose.

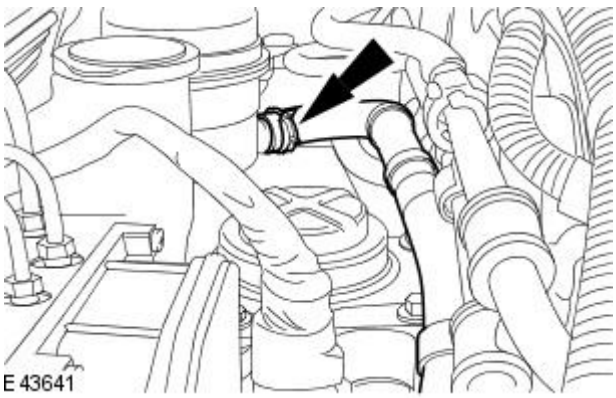

46. NOTE: Place suitable absorbent material below the fluid reservoir to absorb fluid spillage.

- NOTE: Cap the exposed ports.

Disconnect the power assisted steering hose.

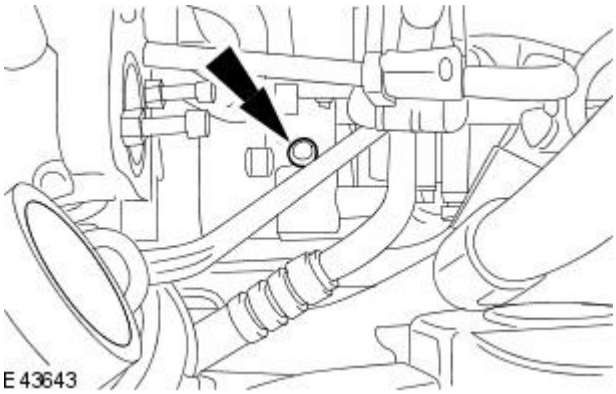

47. Loosen the air conditioning (A/C) compressor line retaining bolt.

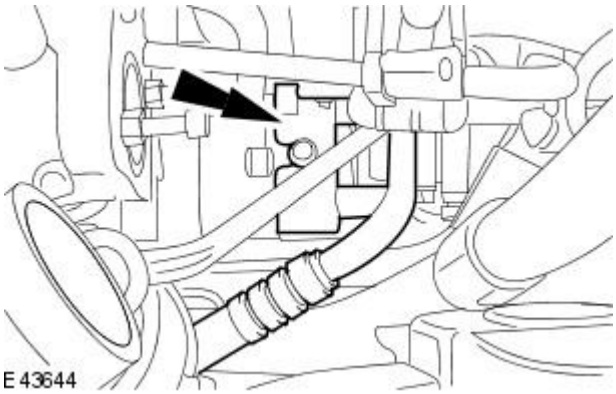

48. NOTE: Remove and discard the O-ring seals.

• NOTE: Cap the exposed ports.

Disconnect the A/C compressor lines.

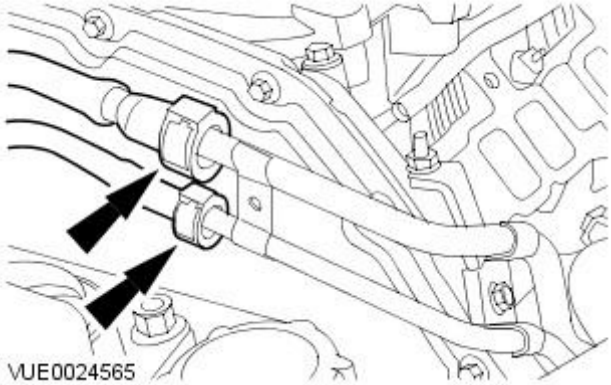

49. Disconnect the fuel lines.
For additional information, refer to: Quick Release Coupling - Push Connect (310-00 Fuel System - General Information, General Procedures).

- Install blanking plugs to the fuel pump fuel supply and fuel return line male and female connectors.

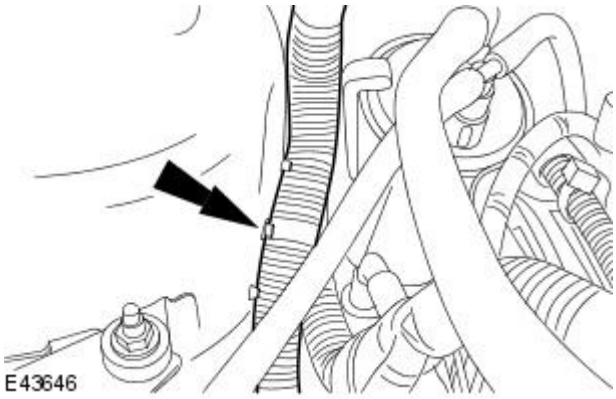

50. Detach the engine wiring harness retaining clip.

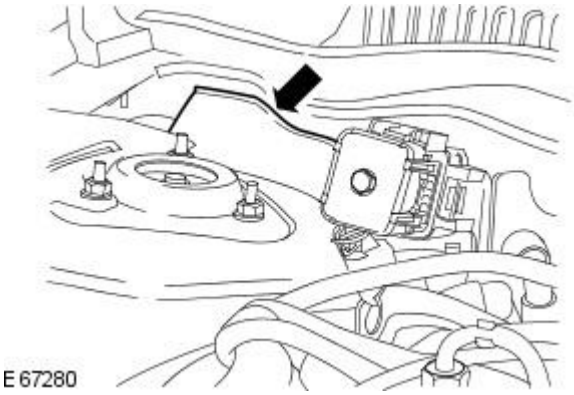

51. Remove the engine wiring harness trim panel.

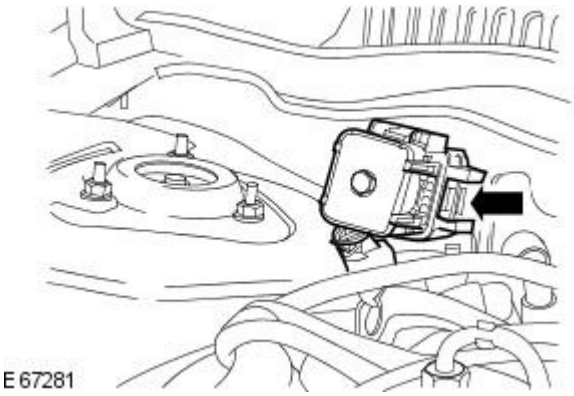

52. Detach the engine wiring harness electrical connector.

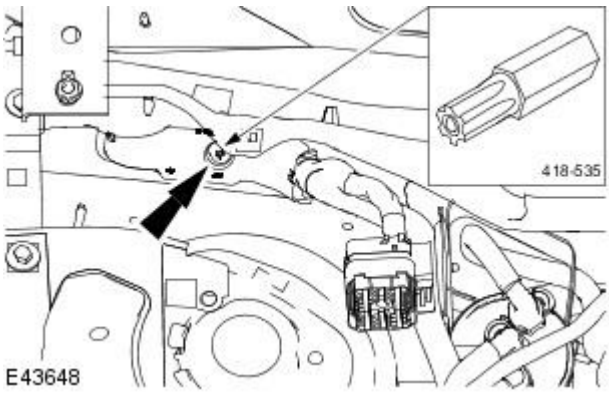

53. NOTE: Bolt remains captive in the engine control module (ECM) electrical connector.

Using the special tool, disconnect the ECM harness electrical connector.

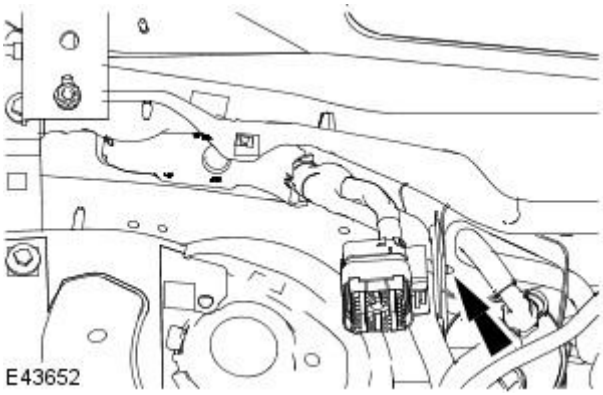

54. Detach the engine wiring harness retaining clip.

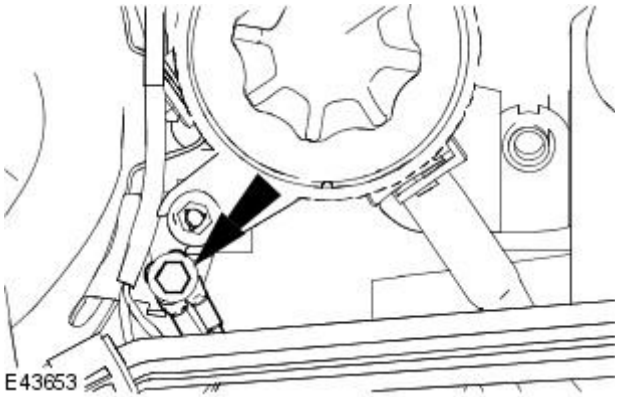

55. Detach the engine wiring harness earth lead.

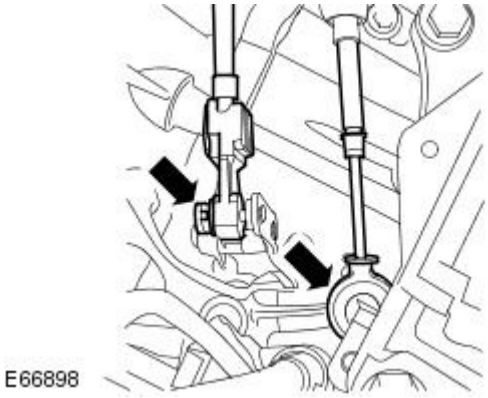

56. Detach the selector cables.

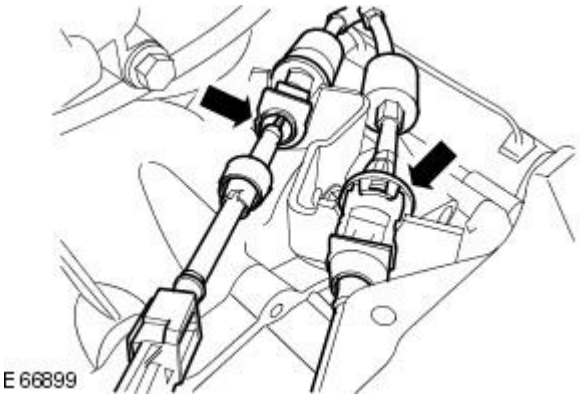

57. NOTE: Secure the selector cables using tie straps.

Detach the selector cables.

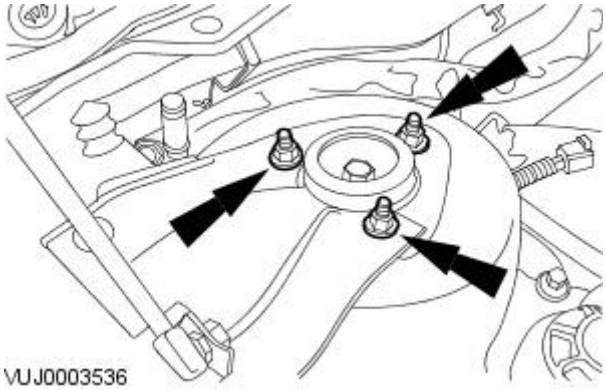

58. NOTE: Right-hand shown, left-hand similar.

Detach the strut and spring assembly.

59. Raise the vehicle.

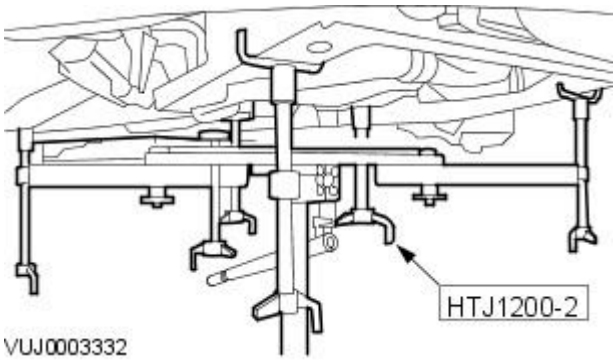

60. CAUTION: Do not support the engine and transaxle assembly directly on the oil pan.

Install the special tool.

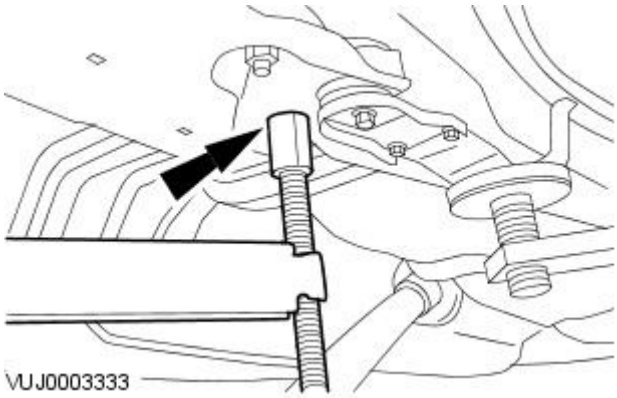

61. NOTE: Left-hand shown, right-hand similar.

Position and adjust the special tool rear height adjuster.

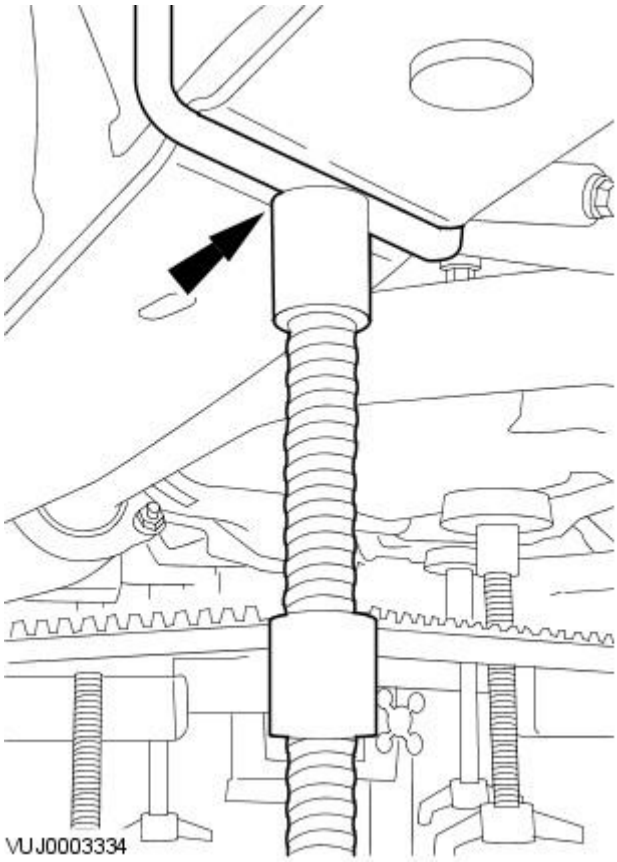

62. NOTE: Right-hand shown, left-hand similar.

Position and adjust the special tool front height adjuster.

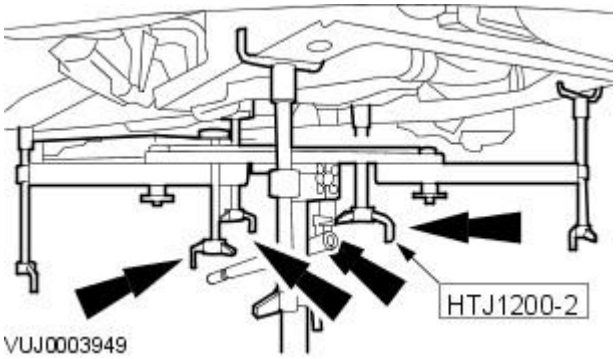

63. Position and adjust the special tool engine height adjusters.

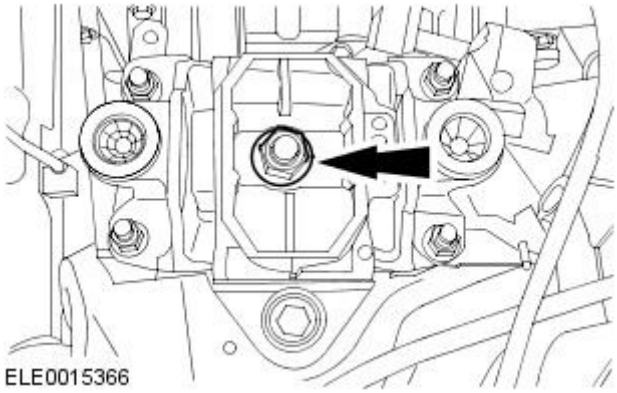

64. Remove the engine rear mount retaining nut.

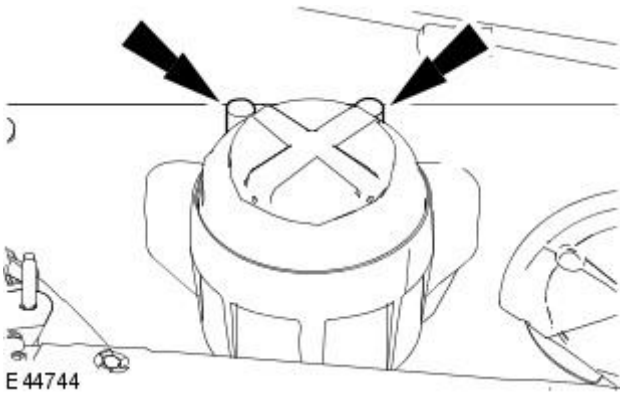

65. NOTE: Discard the retaining nuts.

Remove the engine front mount retaining nuts.

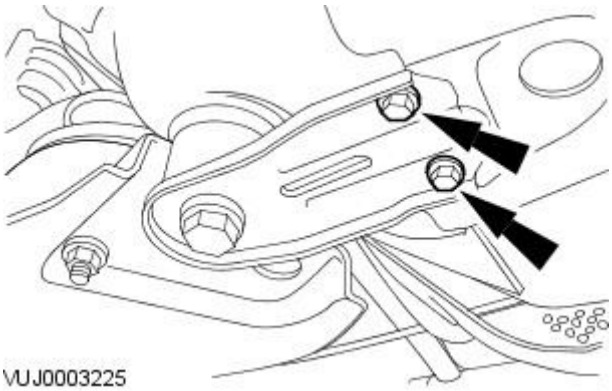

66. NOTE: Left-hand shown, right-hand similar.

Remove the front subframe reinforcement plate retaining bolts.

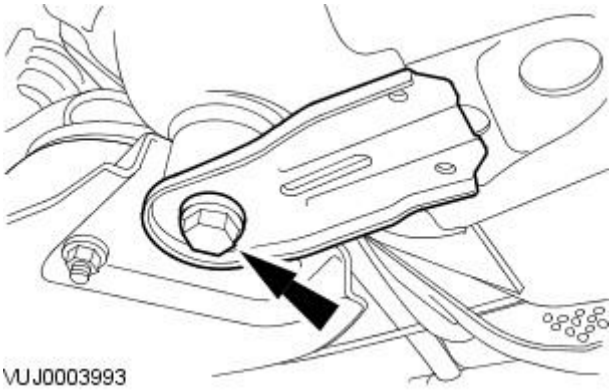

67. NOTE: Left-hand shown, right-hand similar.

Remove the front subframe reinforcement plate.

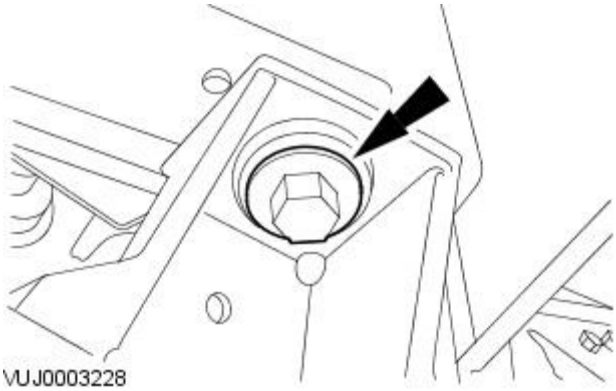

68. NOTE: Left-hand shown, right-hand similar.

Detach the front subframe.

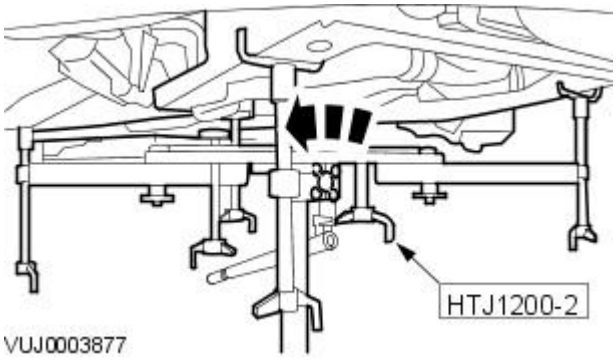

69. Lower the engine, suspension and transmission assembly to gain access to the A/C pipe.

- Rotate the special tool height adjustment valve counter clockwise.

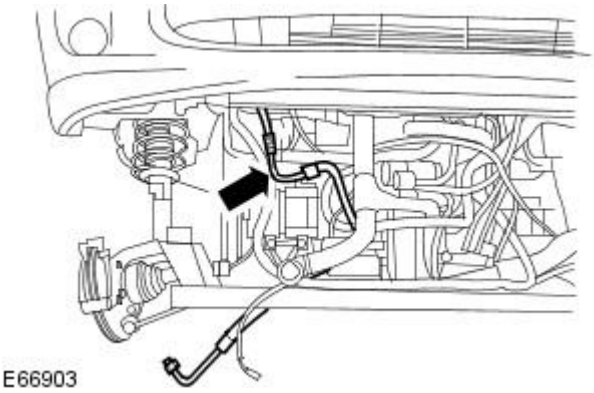

70. NOTE: Secure the A/C pipe using tie straps.

Reposition the AC pipe clear of the engine, suspension and transmission assembly.

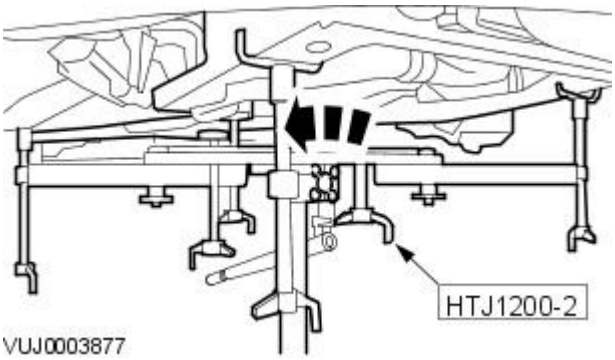

71. Remove the engine, suspension and transmission assembly.

- Rotate the special tool height adjustment valve counter clockwise.

72. CAUTION: Do not support the engine and transaxle assembly directly on the oil pan. Failure to follow this instruction may cause damage to the component.

Place the engine, suspension and transmission assembly to a suitable working area.

73. Detach the engine harness.

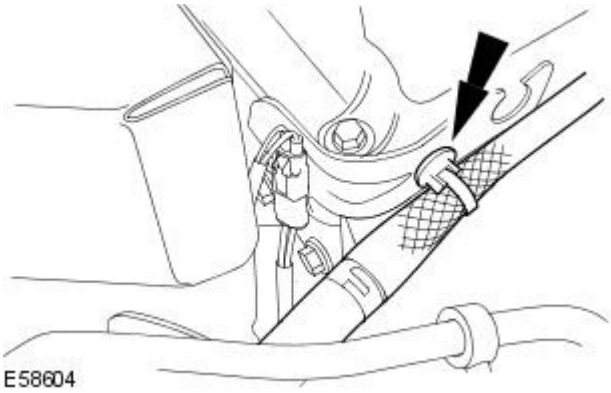

74. Detach the electrical connector.

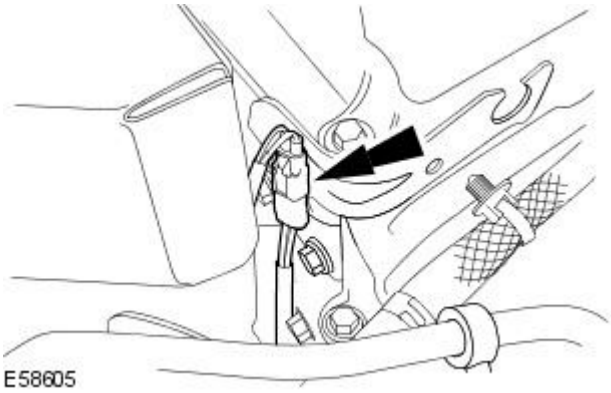

75. Remove the engine cover rear mount bracket.

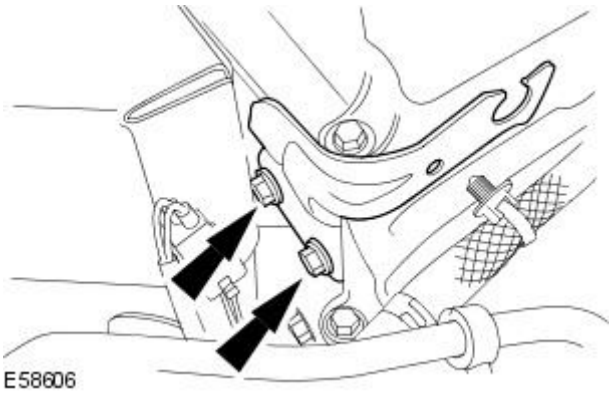

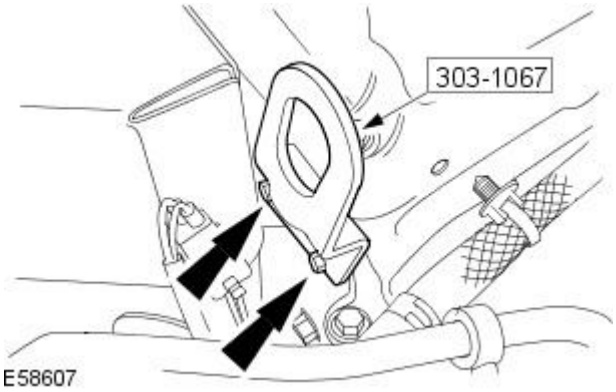

76. Install the engine rear lifting eye.

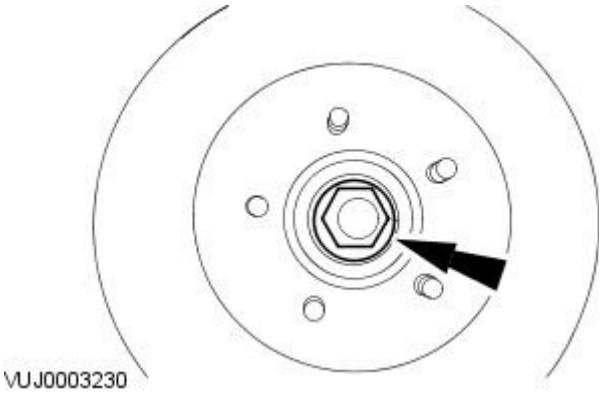

77. Remove and discard the right-hand wheel hub nut.

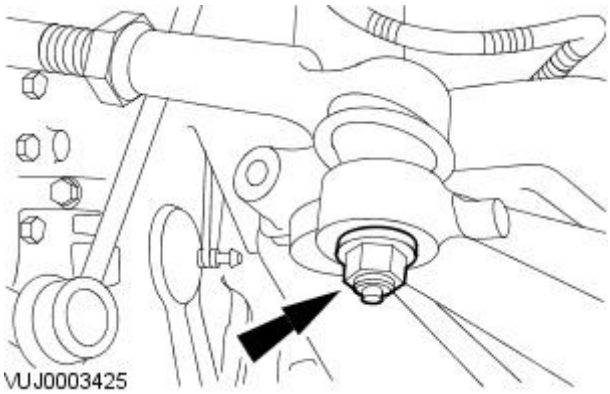

78. CAUTION: When the tie-rod end is separated from the wheel hub assembly, the ball joint seal should be protected to prevent damage.

Remove and discard the right-hand tie rod-end retaining nut.

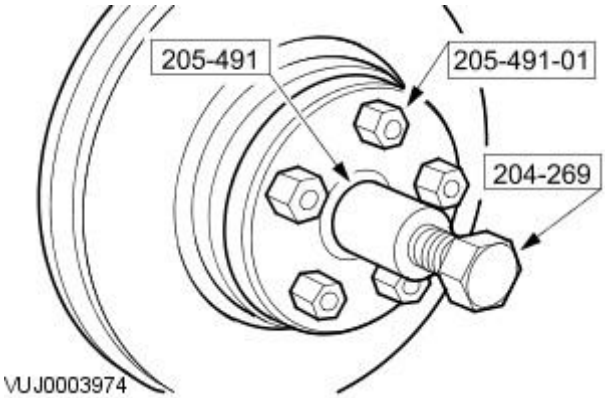

79. Using the special tools, detach the right-hand drive halfshaft.

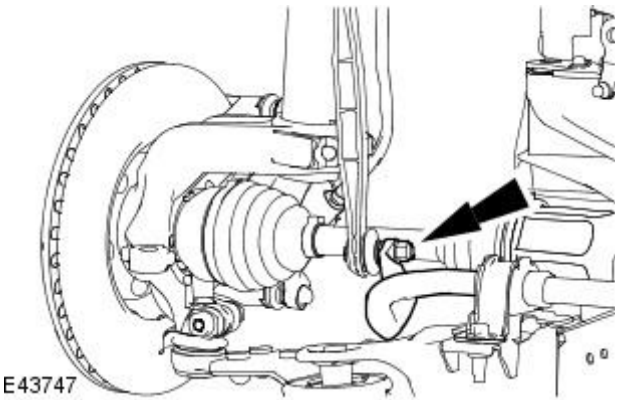

80. Remove the right-hand anti-roll bar link retaining nut.

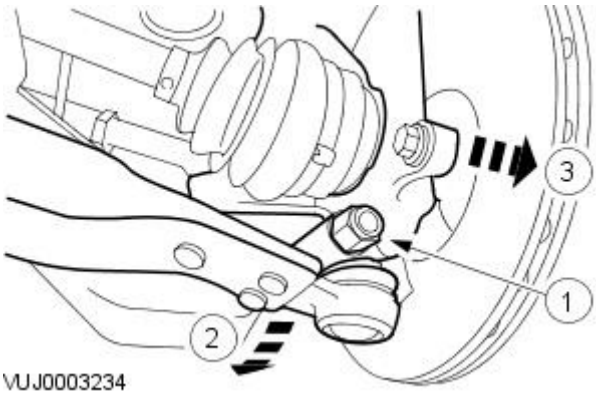

81. Remove the right-hand wheel knuckle and strut.

1. Remove and discard the lower arm ball joint retaining nut and bolt.
2. Reposition the lower arms.
3. Remove the wheel knuckle and strut.

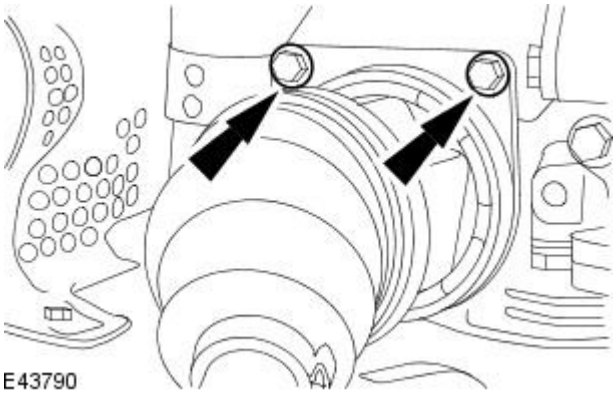

82. Remove the right-hand drive halfshaft.

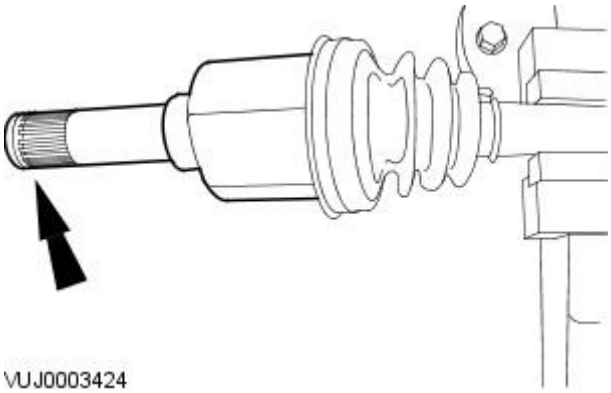

83. Remove and discard the drive halfshaft snap ring.

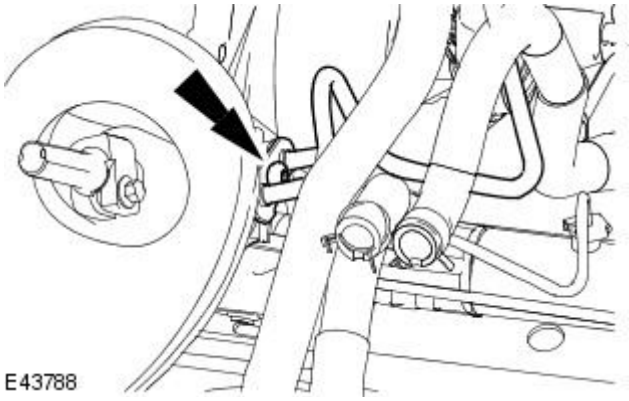

84. NOTE: Discard the O-ring seals.

- NOTE: Cap the exposed ports.

Disconnect the power steering lines.

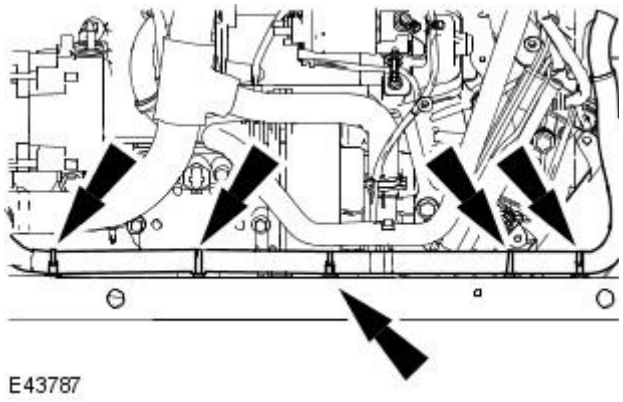

85. Detach the wiring harness.

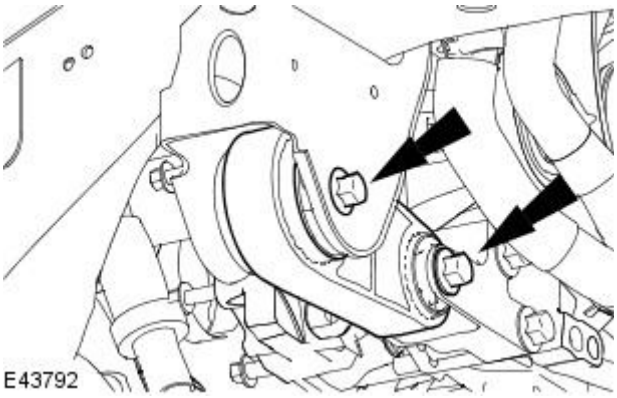

86. Remove the engine roll restrictor.

87. CAUTION: Do not support the engine and transaxle assembly directly on the oil pan. Failure to follow this instruction may cause damage to the component.

Using a suitable hydraulic lift, raise the engine and transmission from the subframe.

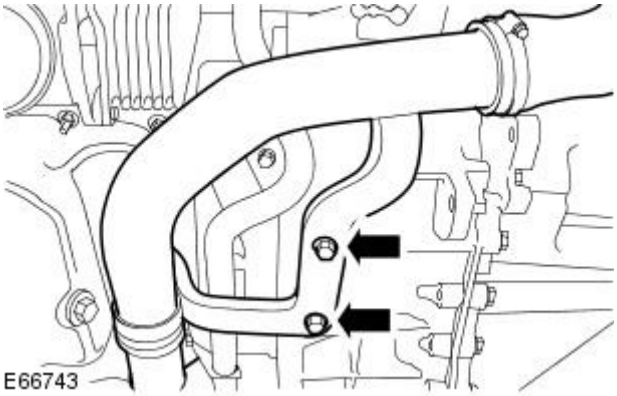

88. Remove the charge air cooler intake pipe retaining bolts.

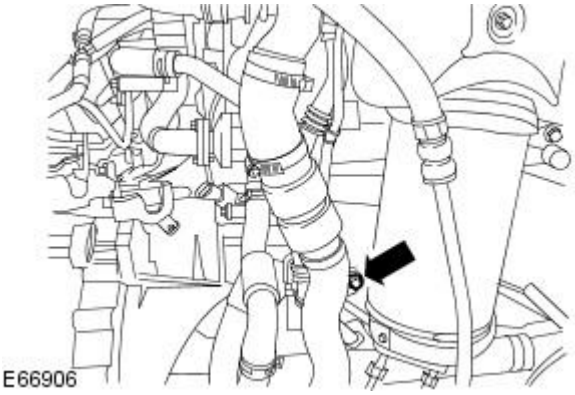

89. Remove the charge air cooler pipe retaining bolt.

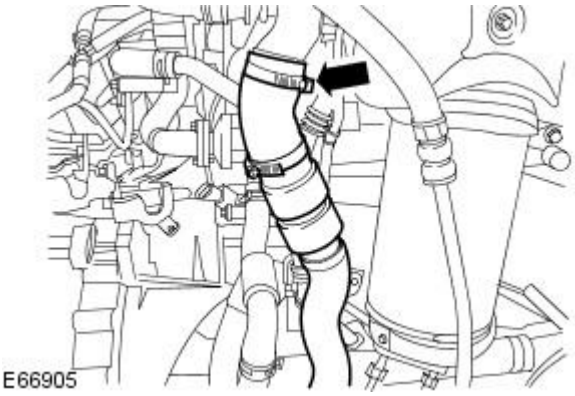

90. Remove the charge air cooler pipe.

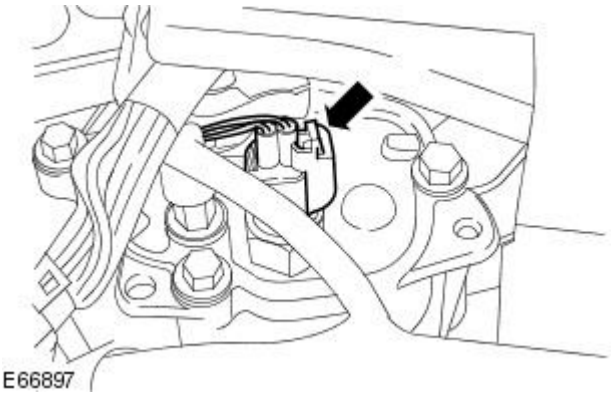

91. Disconnect the reverse lamp switch electrical connector.

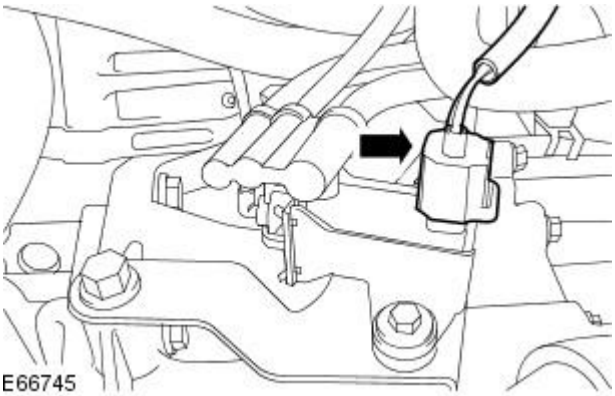

92. Disconnect the emission control solenoid electrical connector.

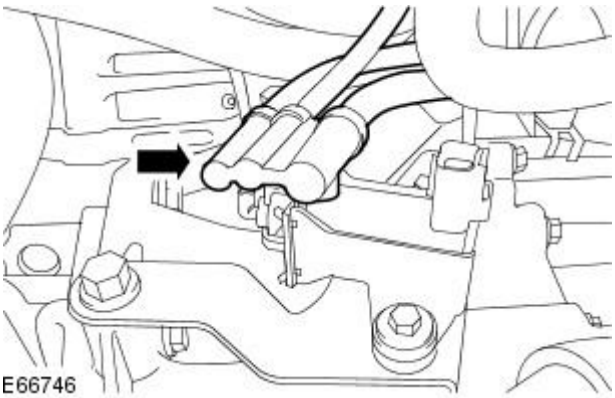

93. Disconnect the emission control solenoid hose.

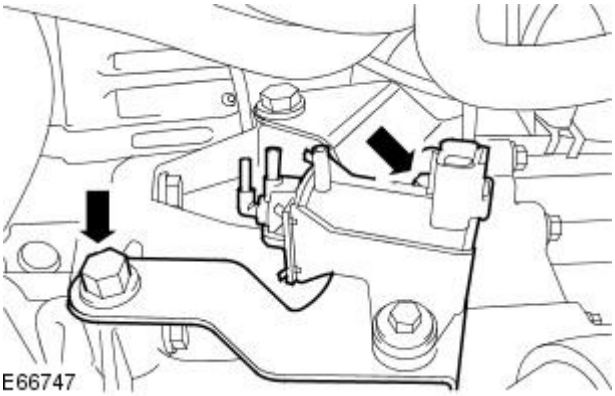

94. Remove the emission control solenoid assembly.

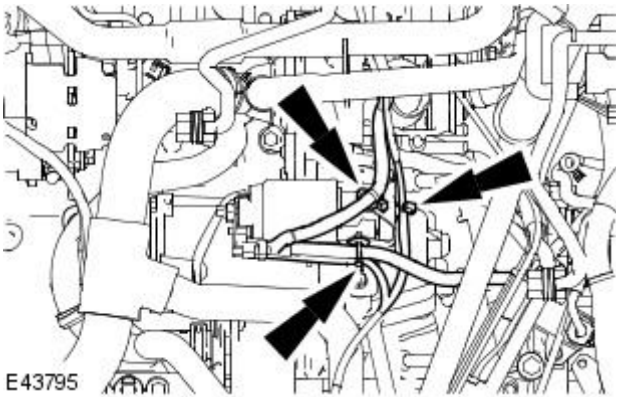

95. Detach the starter motor wiring harness.

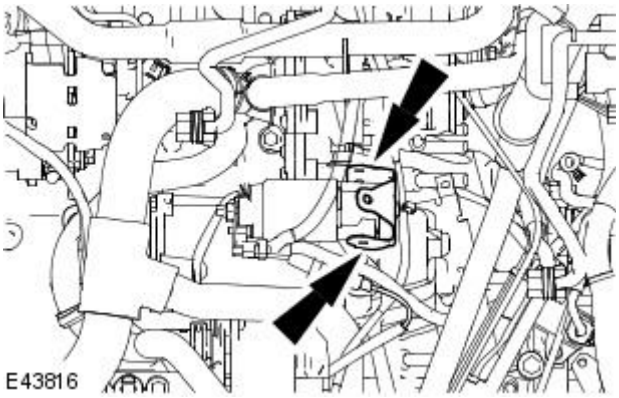

96. Remove the starter motor wiring harness retaining bracket.

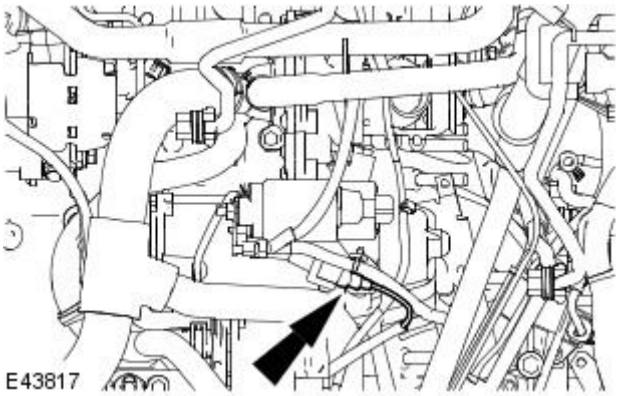

97. Disconnect the starter motor wiring harness electrical connector.

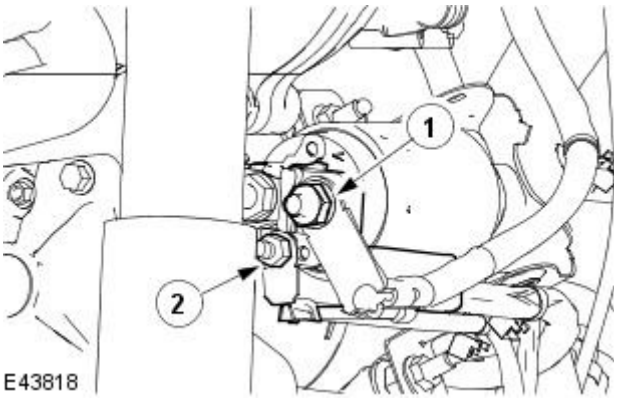

98. Detach the starter motor wiring harness.

1. Disconnect the starter motor electrical connector.
2. Disconnect the starter motor solenoid electrical connector.

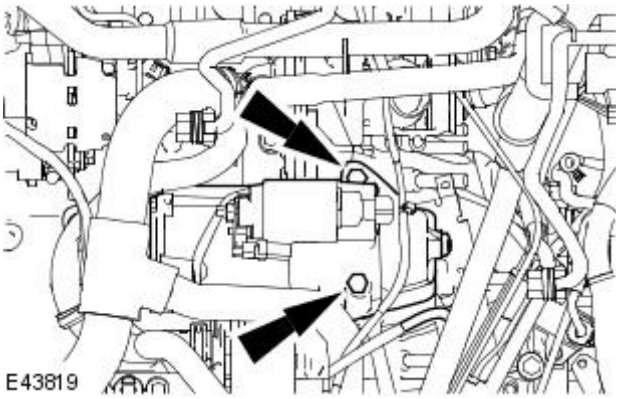

99. Remove the starter motor.

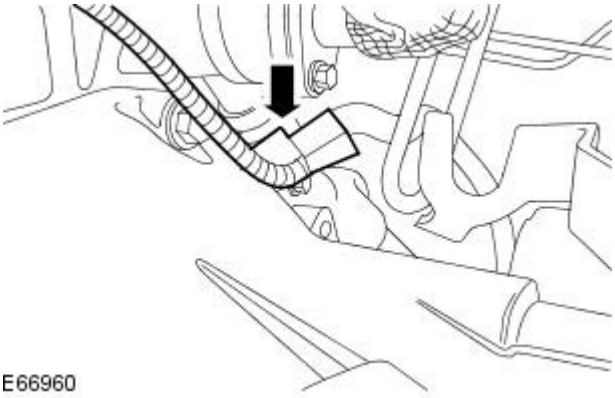

100. Disconnect the crankshaft position (CKP) sensor electrical connector.

101. Remove the transmission upper retaining bolts.

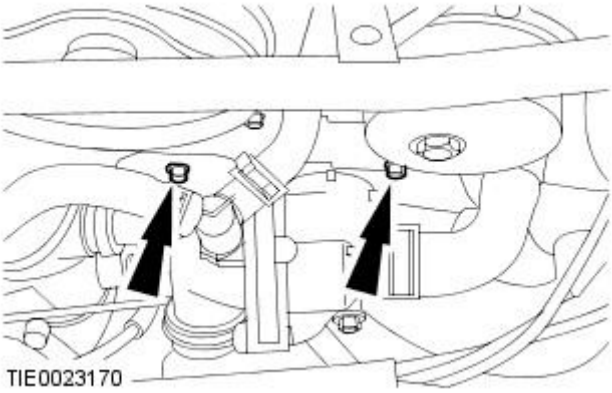

102. Remove the transmission right-hand retaining bolts.

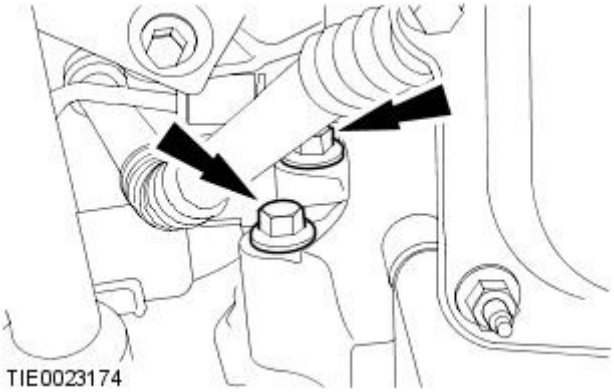

103. CAUTION: Do not support the engine and transaxle assembly directly on the oil pan. Failure to follow this instruction may cause damage to the component.

Remove the engine assembly from the transmission assembly.

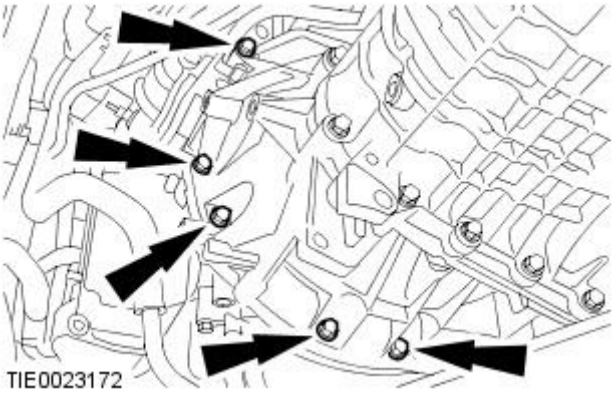

Engine - 2.0L Duratorq-TDCi / 2.2L Duratorq-TDCi (110kW / 150PS) - Puma - Engine

Disassembly

Special Tool(s)	
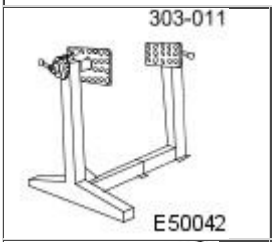	Engine stand 303-011
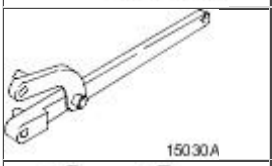	Universal Flange Holding Wrench 205-053
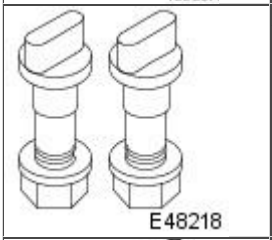	Adapter for 205-053-02 205-053-02
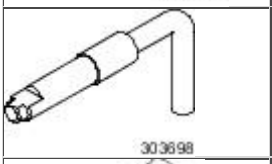	Timing Tool, Crankshaft 303-698
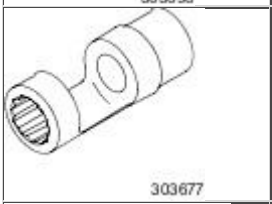	Remover, Fuel Injector 303-711
	Remover/Installer, Cooling Hose Clamp 303-397

Disassembly

All vehicles

1. Using the special tool, mount the engine to the engine stand.

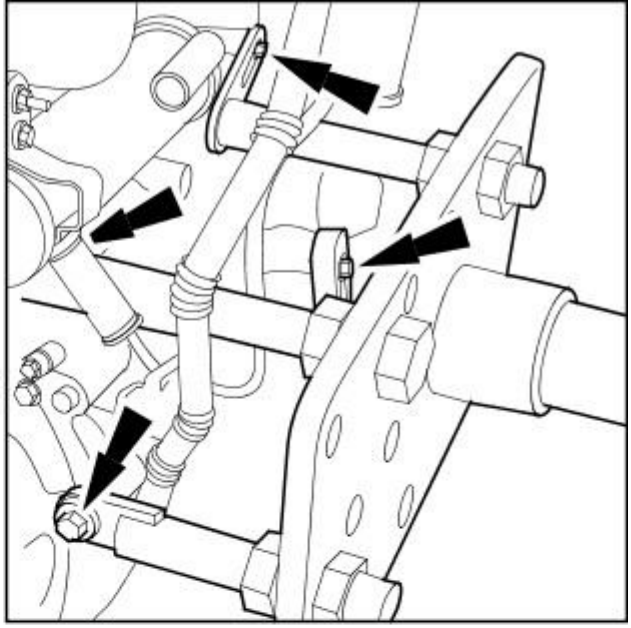

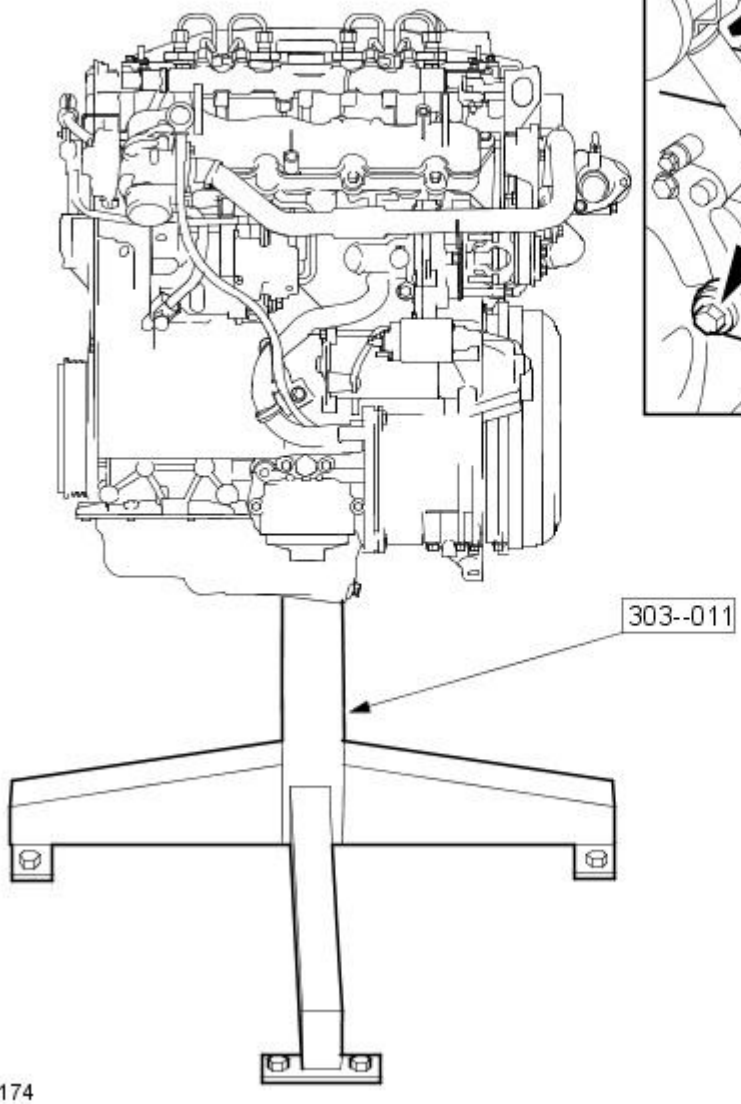

E48174

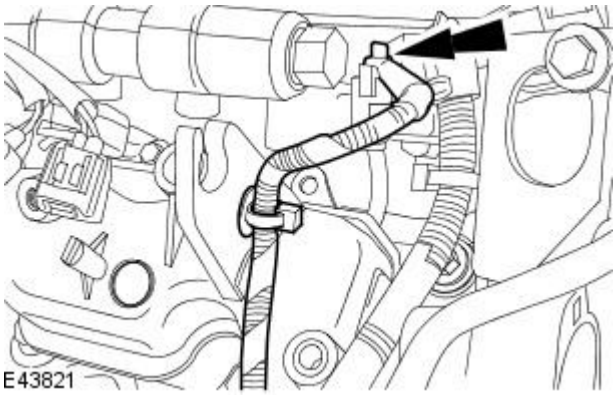

E43821

2. Detach the glow plug wiring harness.

- Remove the glow plug wiring harness securing nut.

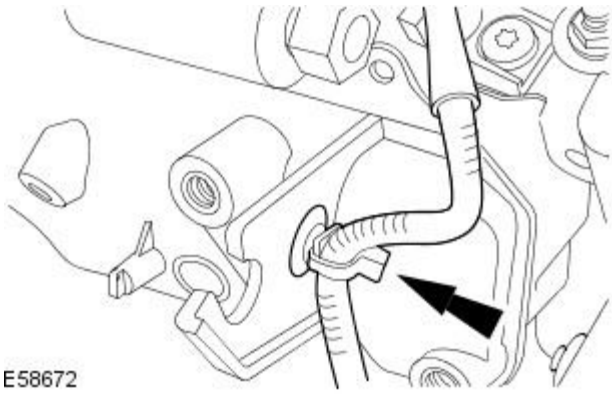

E58672

3. Detach the wiring harness from the intake manifold.

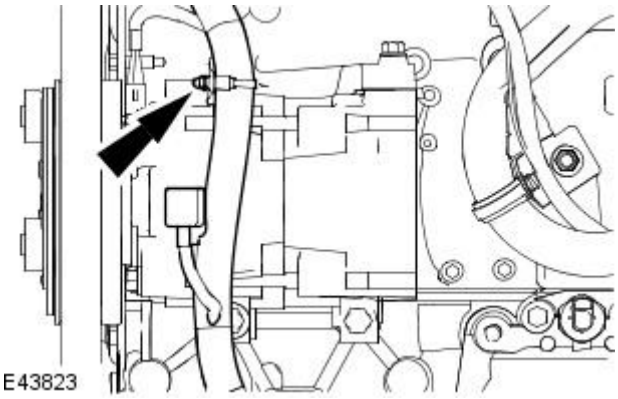

4. Detach the wiring harness from the air conditioning (AC) compressor.

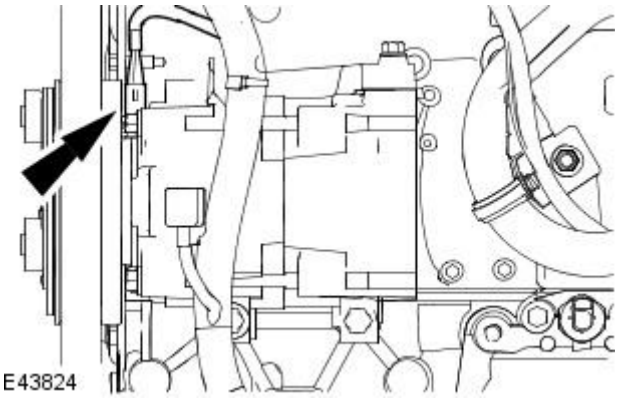

5. Disconnect the AC compressor electrical connector.

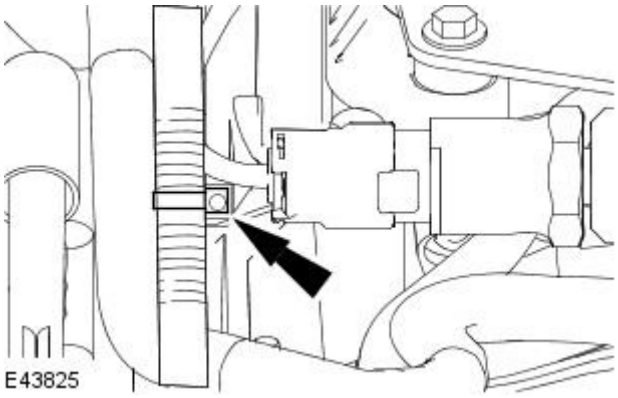

6. Detach the wiring harness from the retaining stud.

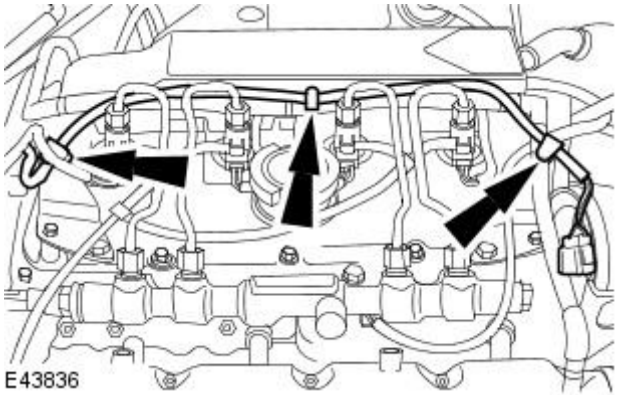

7. Detach the mass air flow (MAF) sensor wiring harness.

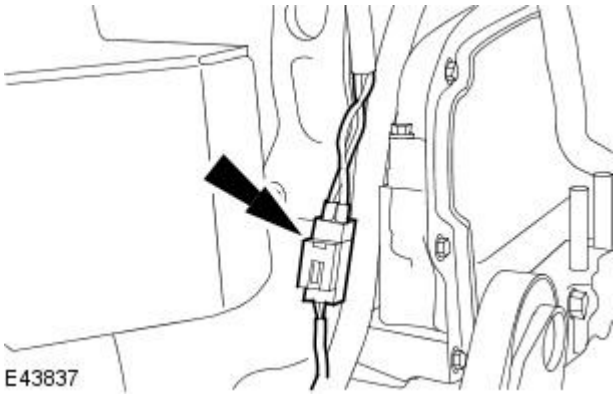

8. Detach the generator wiring harness electrical connector.

9. Remove the wiring harness.

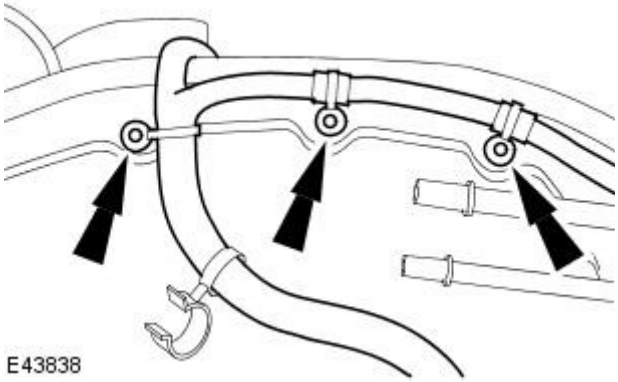

10. Detach the accessory drive belt.

1. Reposition the accessory drive belt tensioner.
2. Detach the accessory drive belt.

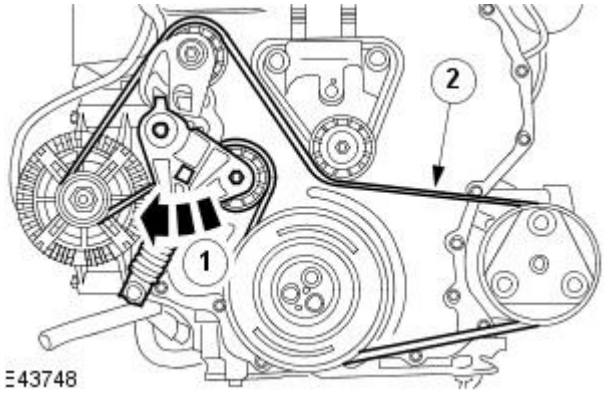

11. Remove the accessory drive belt.

1. Remove the accessory drive belt tensioner.
2. Remove the accessory drive belt.

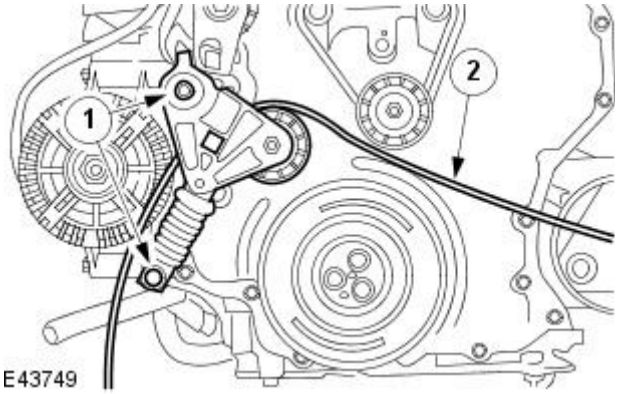

12. Remove the AC compressor.

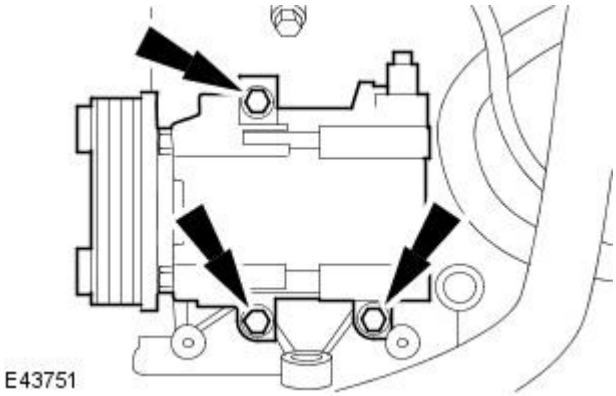

13. Detach the generator electrical connector.

- Remove the generator electrical connector securing nut.

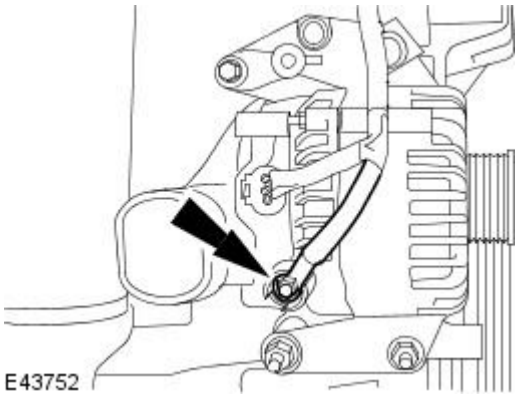

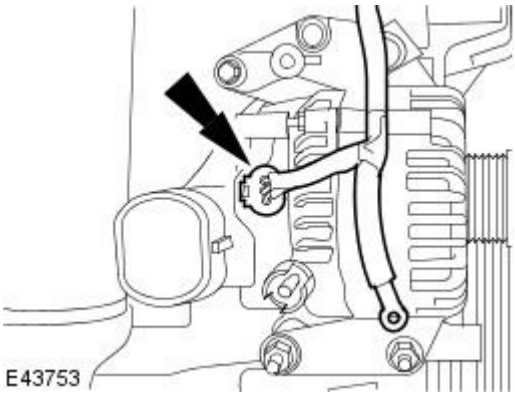

14. Disconnect the generator electrical connector.

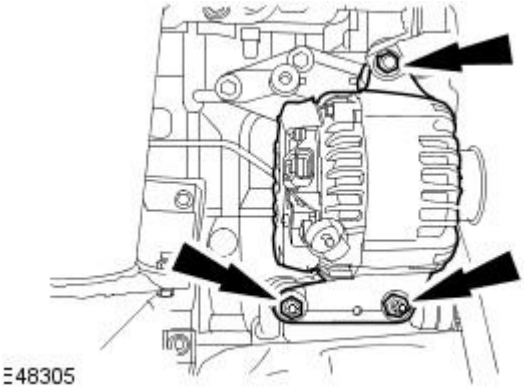

15. Remove the generator.

- Remove the wiring harness support bracket from the generator upper retaining bolt.

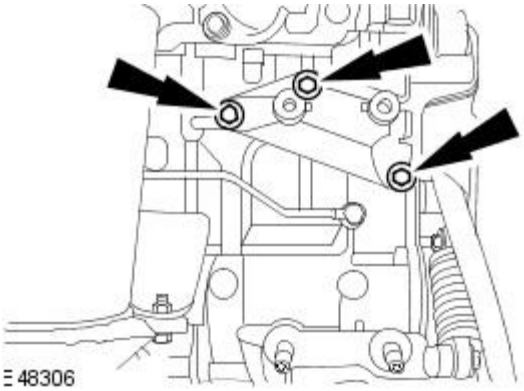

16. Remove the accessory drive belt tensioner bracket.

Vehicles with 2.2L diesel engine

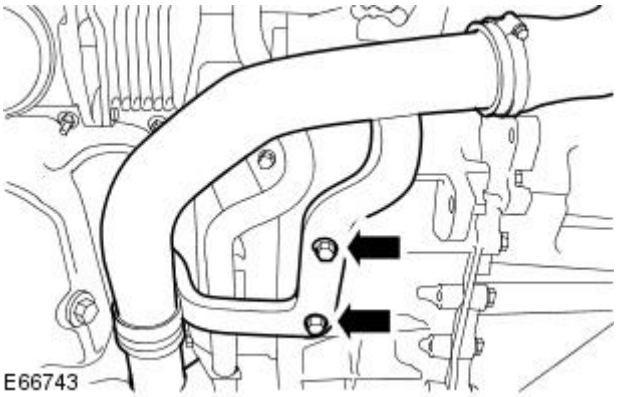

17. Remove the charge air cooler intake pipe retaining bolts.

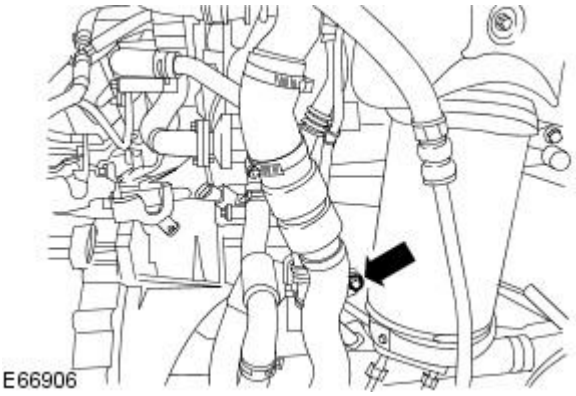

18. Remove the turbo outlet pipe retaining bolt.

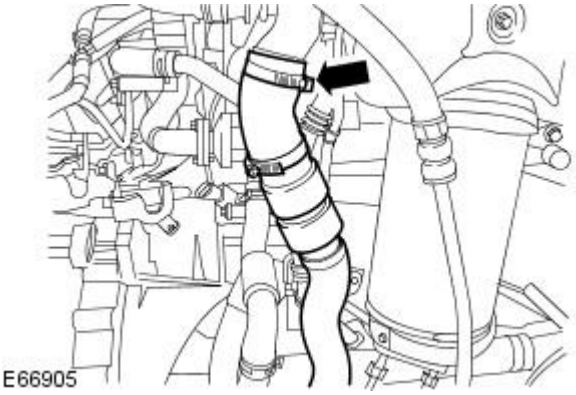

19. Remove the turbo outlet pipe and charge air cooler intake pipe assembly.

All vehicles

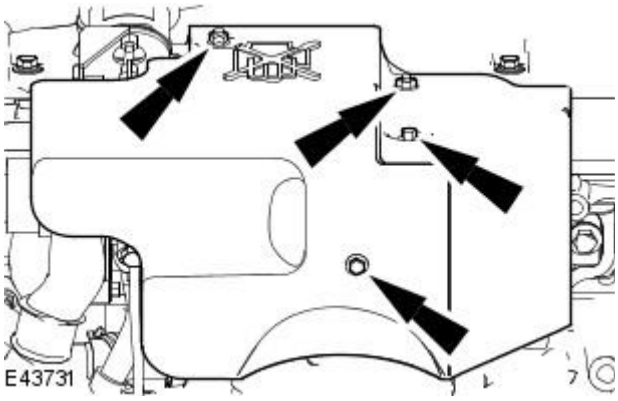

20. Remove the turbocharger heat shield.

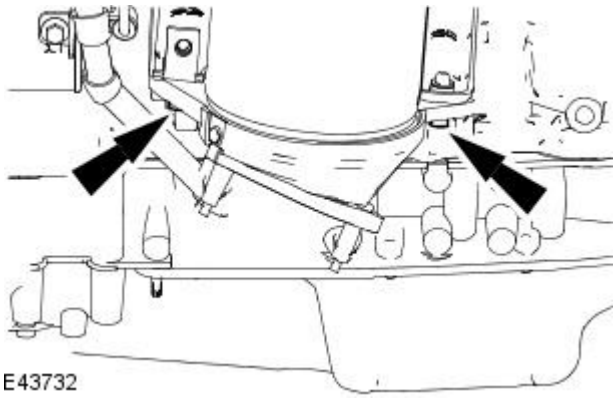

21. Remove the catalytic converter retaining bolts.

- Remove the catalytic converter securing bracket.

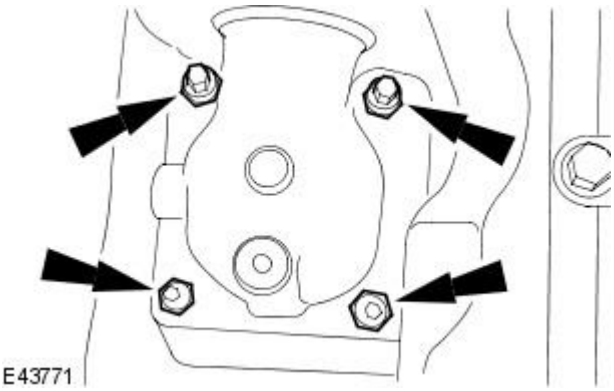

22. Remove the catalytic converter.

- Remove and discard the retaining nuts.

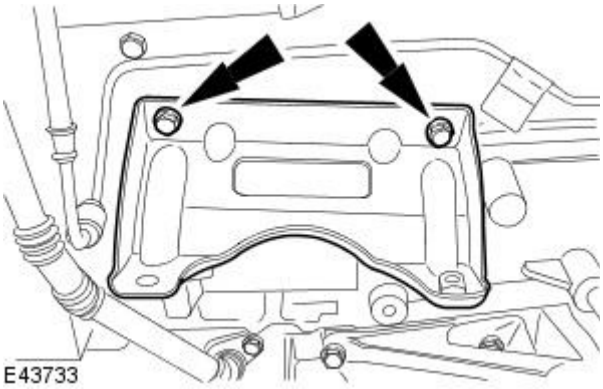

23. Remove the catalytic converter retaining bracket.

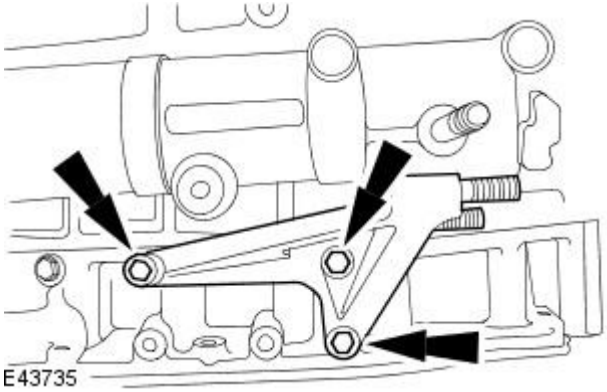

24. Remove the halfshaft retaining bracket.

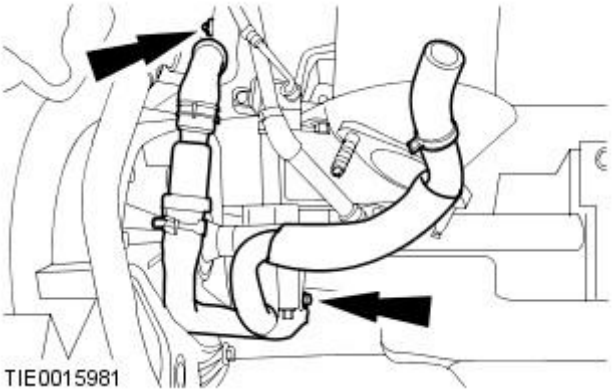

25. Remove the exhaust gas recirculation (EGR) cooler coolant hose.

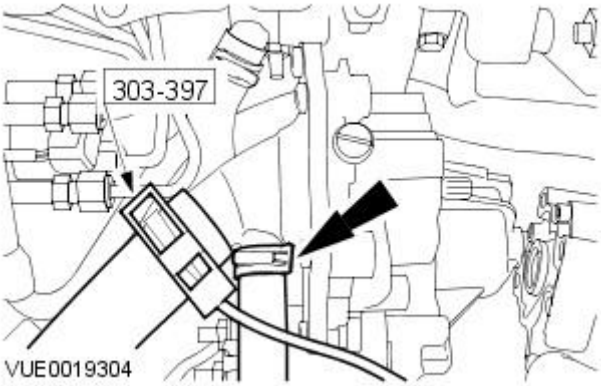

26. Using the special tool, remove the water pump hoses.

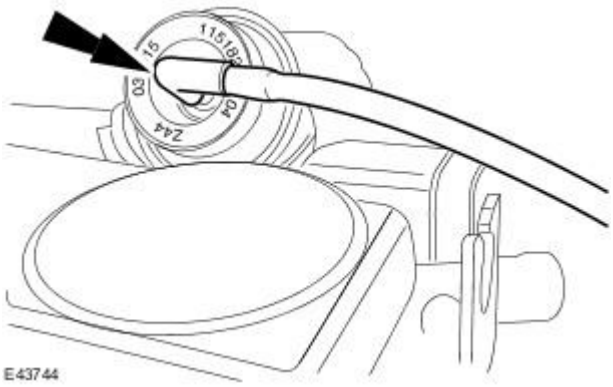

27. Disconnect the turbocharger vacuum hose.

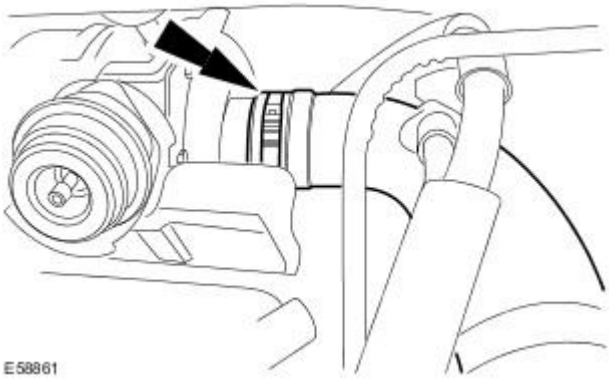

28. Remove the air filter outlet tube retaining clip.

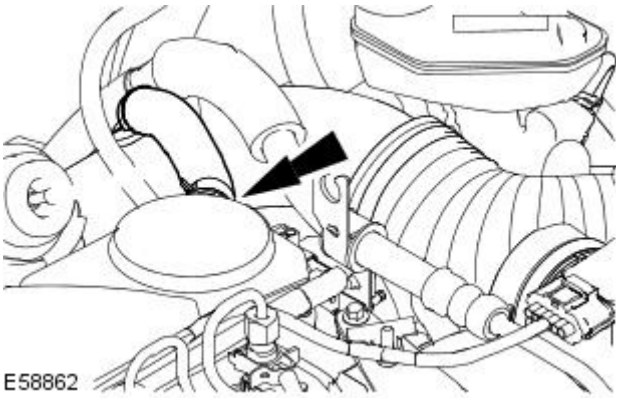

29. Remove the air filter outlet tube.

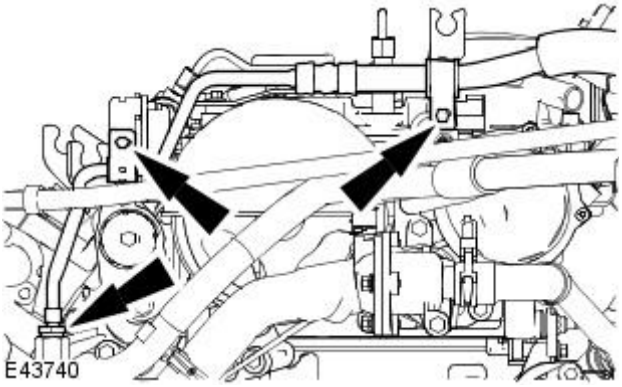

30. Remove the power assisted steering high-pressure pipe.

- Discard the O-ring seal.

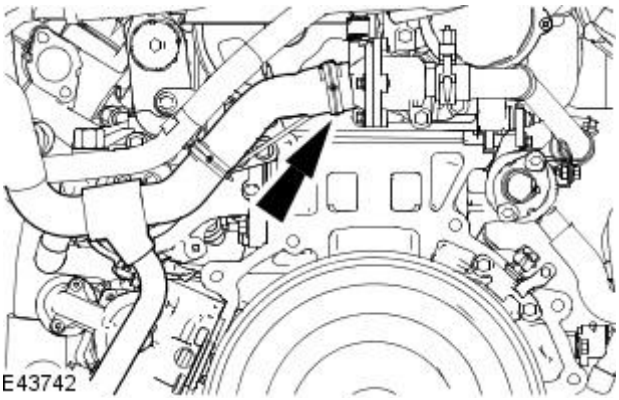

31. Disconnect the coolant hose.

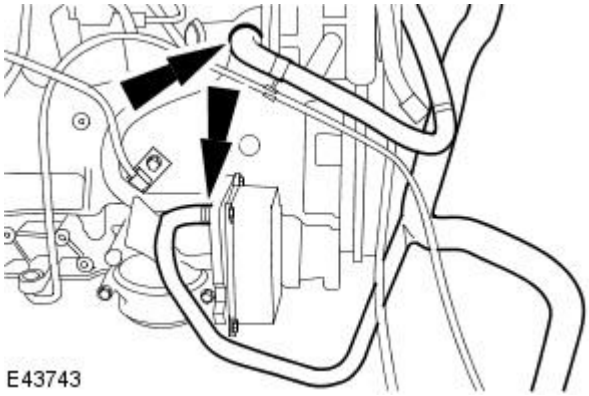

32. Remove the coolant hose.

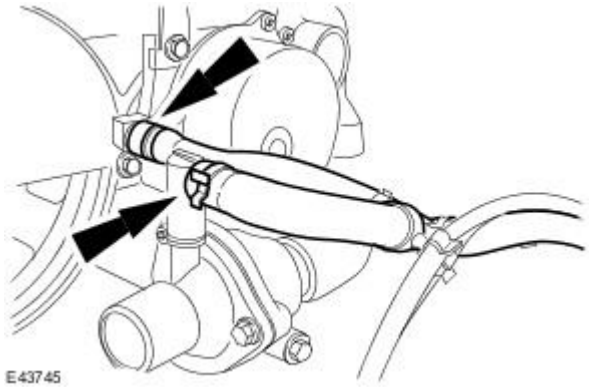

33. Remove the coolant hose.

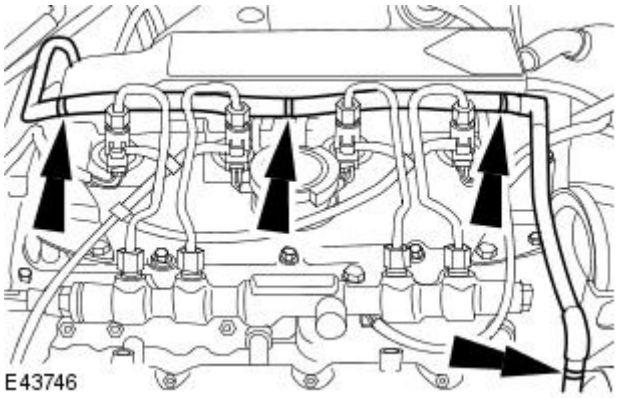

34. Remove the starter motor to generator wiring harness.

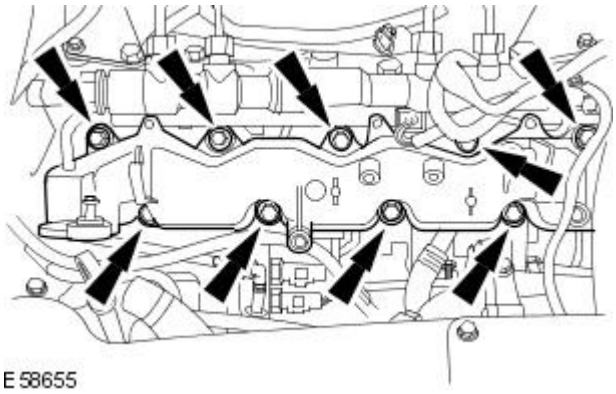

35. Remove the intake manifold.

- Remove and discard the intake manifold gaskets.

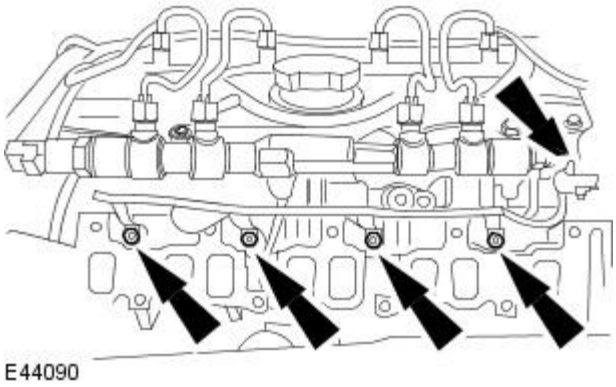

36. Remove the glow plug wire retaining nuts.

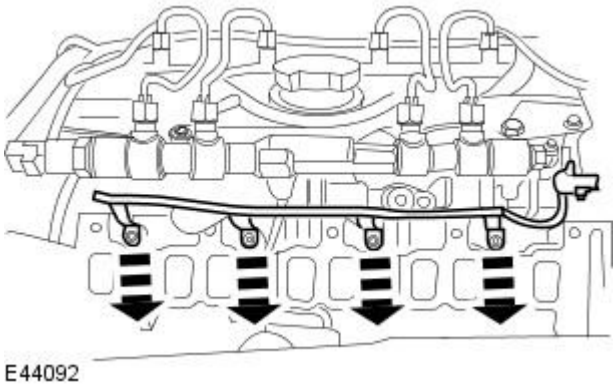

37. Remove the glow plug wiring harness.

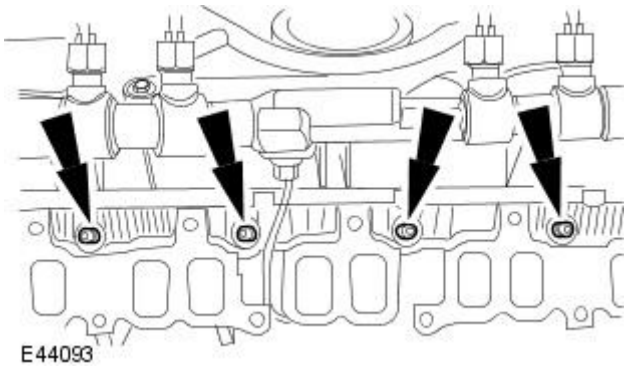

38. Remove the glow plugs.

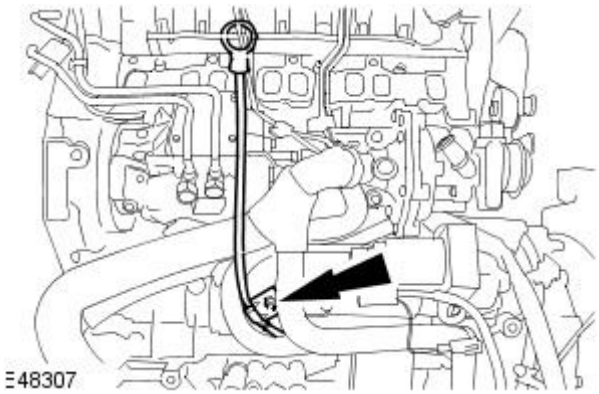

39. Remove the oil level indicator and tube.

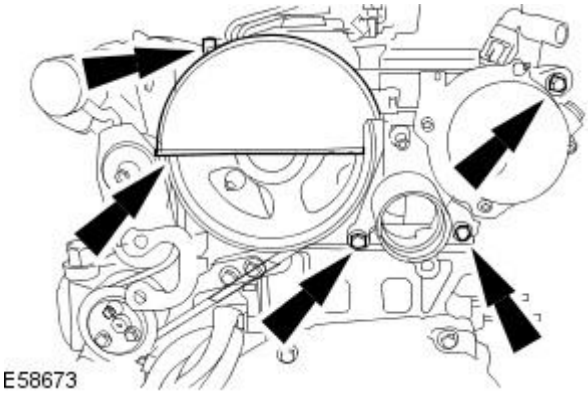

40. Remove the brake vacuum pump retaining bolts.

- Remove the power steering pump belt cover.

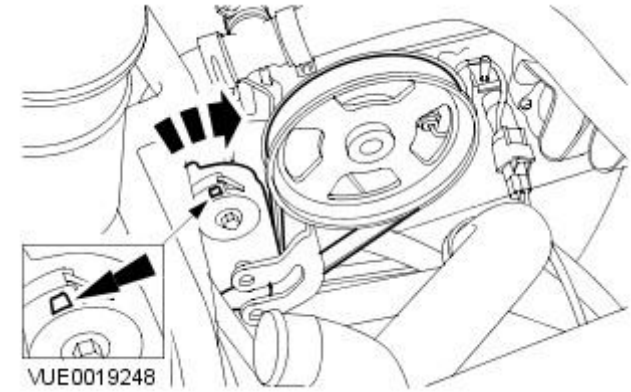

41. Remove the power steering pump belt.

- Rotate the power steering pump belt tensioner clockwise.

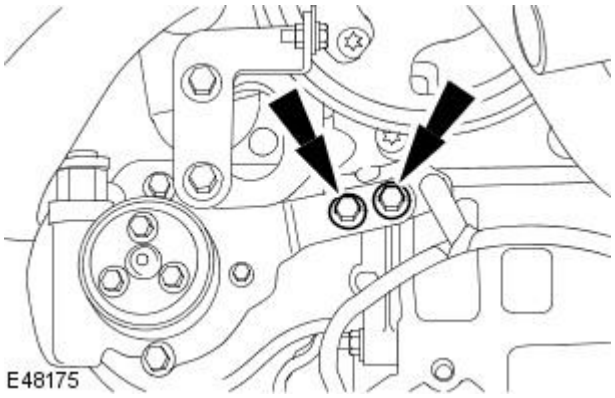

42. Remove the power assisted steering pump bracket retaining bolts.

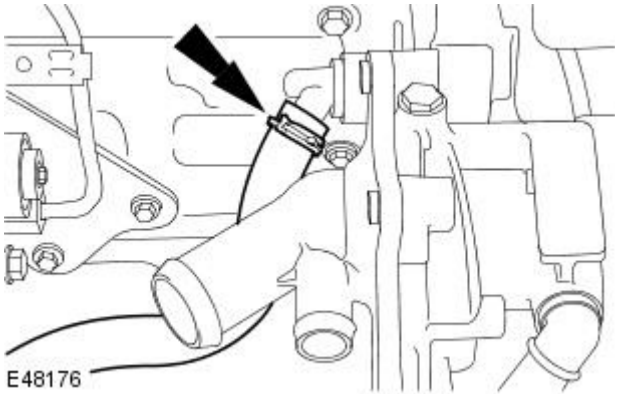

43. Disconnect the coolant hose from the water pump.

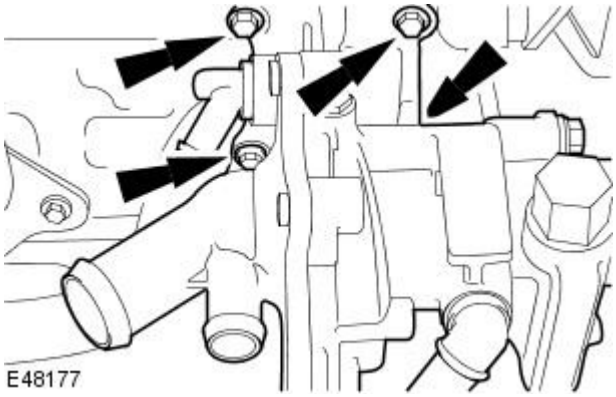

44. Remove the water pump and power assisted steering pump assembly.

- Remove and discard the gasket.

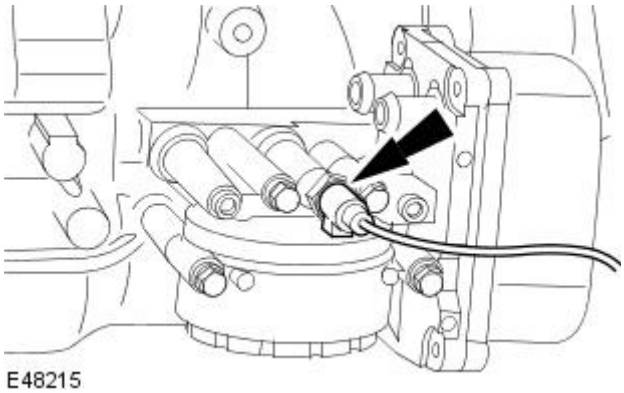

45. Disconnect the oil pressure switch electrical connector.

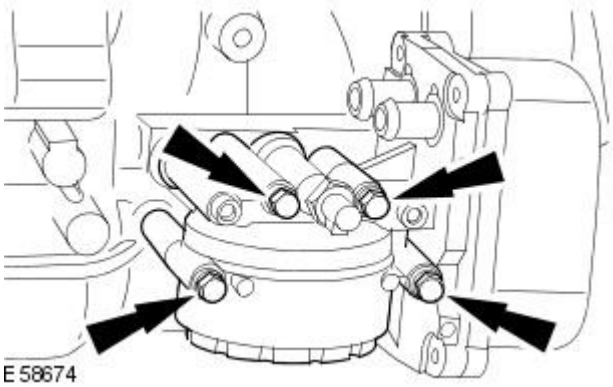

46. Remove the oil filter housing.

- Remove and discard the oil filter.
- Remove and discard the O-ring seals.

47. Disconnect the knock sensor (KS) electrical connector.

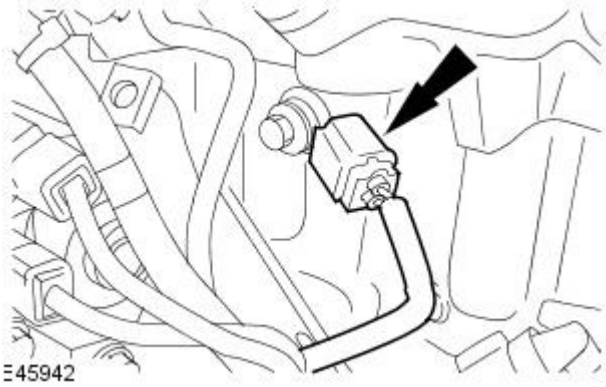

48. Detach the wiring harness.

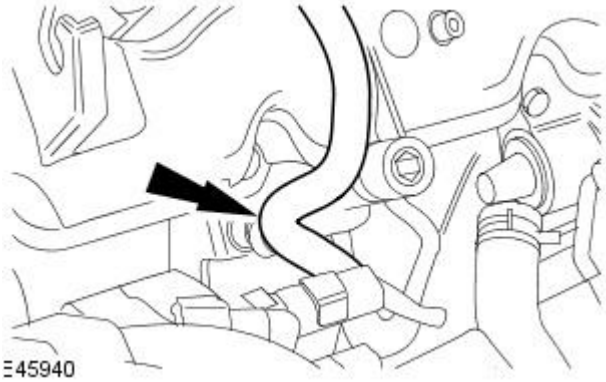

49. NOTE: Protect the fuel metering valve and fuel temperature sensor electrical connectors with lint free cloth to prevent contamination from the cleaning fluid.

Disconnect the fuel metering valve and fuel temperature sensor electrical connectors.

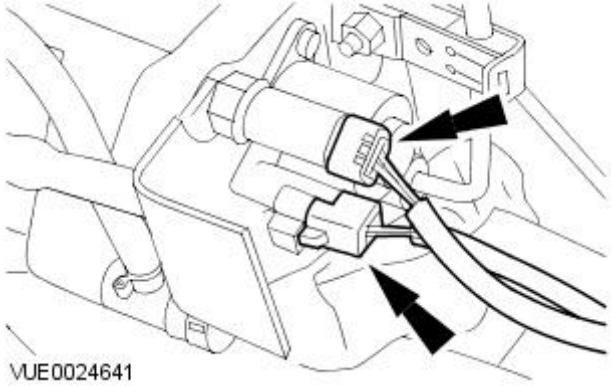

50. CAUTION: Loosen the clutch pressure plate retaining bolts by two turns at a time in the sequence shown.

Remove the clutch disc and pressure plate.

- Remove and discard the retaining bolts.

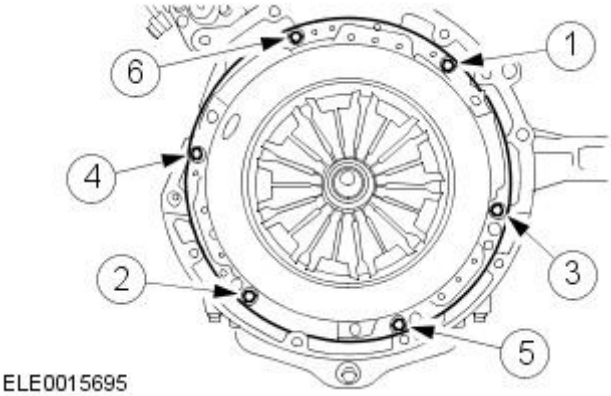

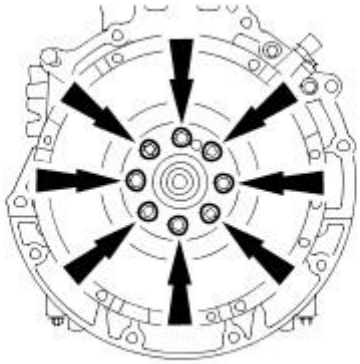

51. Remove the flywheel.

- Remove and discard the retaining bolts.

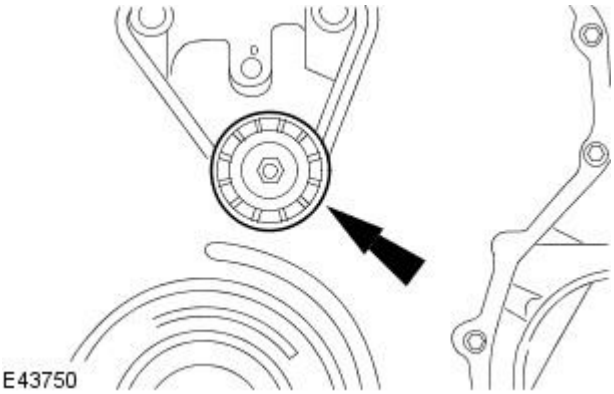

52. Remove the idler pulley.

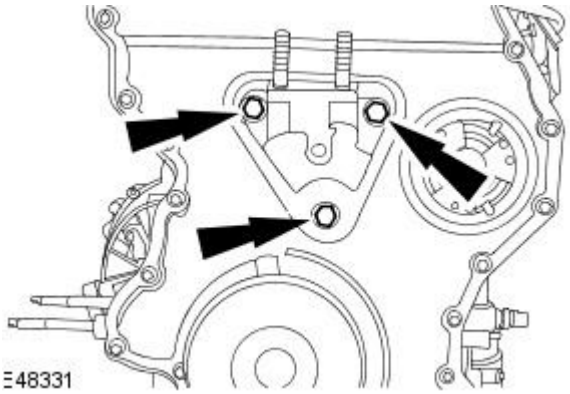

53. Remove the engine front mount bracket.

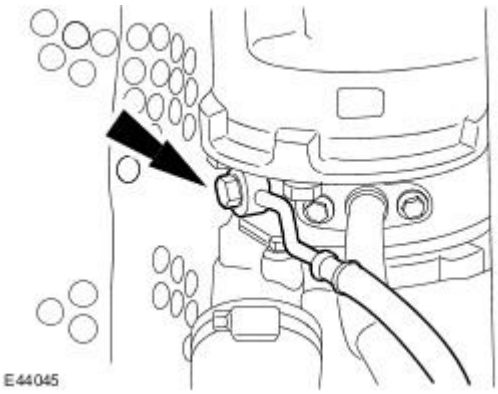

54. Disconnect the oil supply tube from the turbocharger.

- Remove and discard the sealing washers.

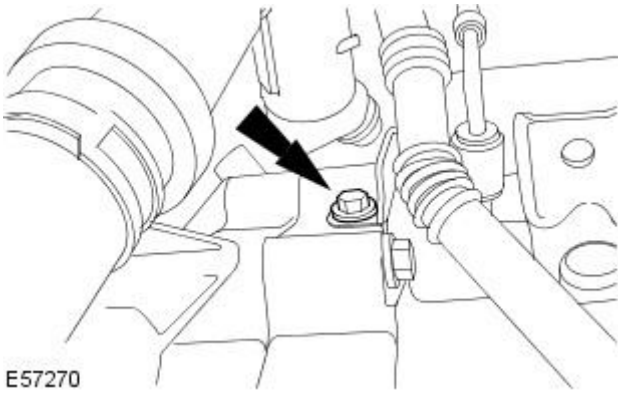

55. Detach the oil supply tube.

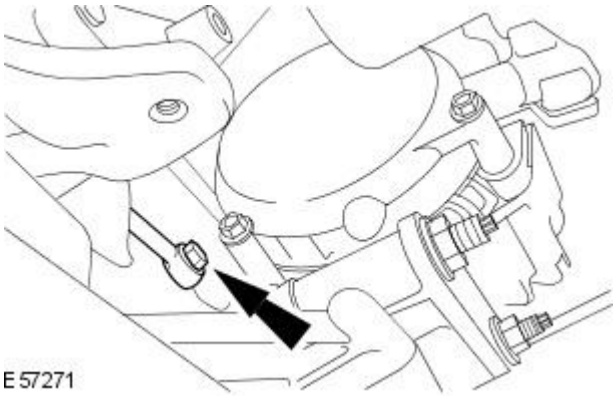

56. Remove the oil supply tube.

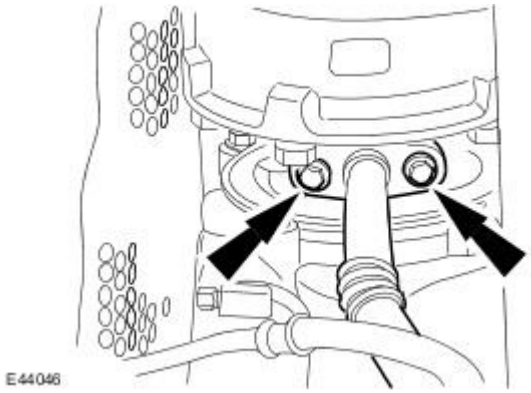

57. Disconnect the oil return tube from the turbocharger.

- Remove and discard the gasket.

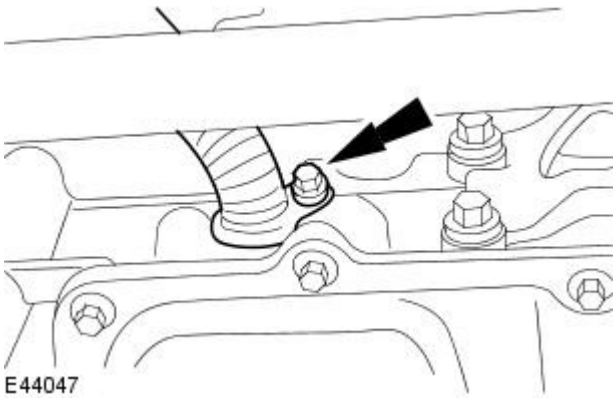

58. Remove the oil return tube.

- Remove and discard the O-ring seal.

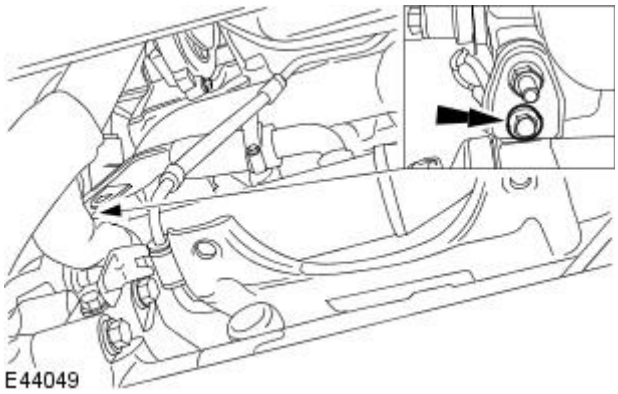

59. Remove the EGR cooler mount bracket retaining bolt.

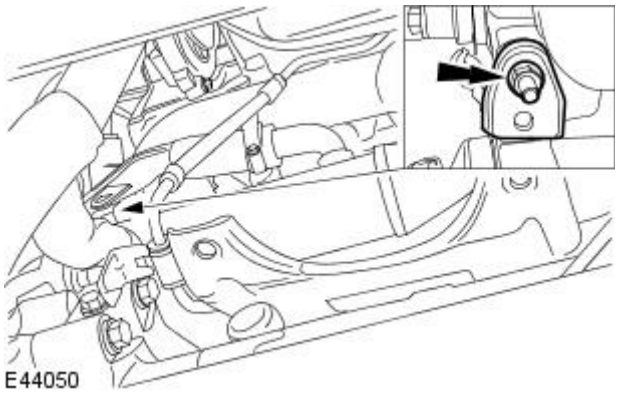

60. Remove the EGR cooler mount bracket.

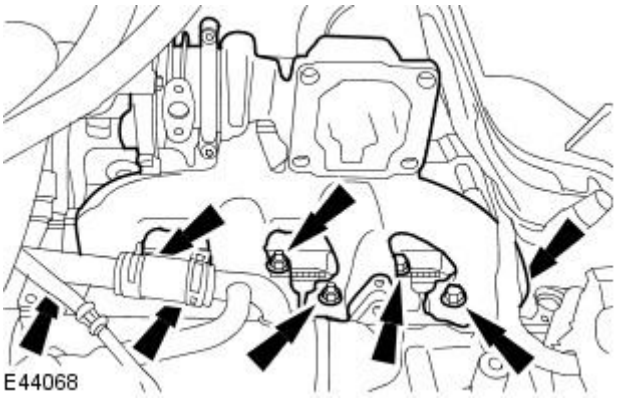

61. Remove the exhaust manifold.

- Remove and discard the retaining bolts and nuts.

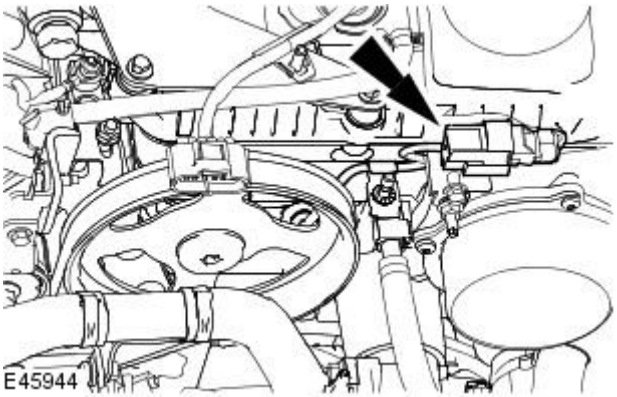

62. Detach the cylinder head temperature (CHT) sensor electrical connector.

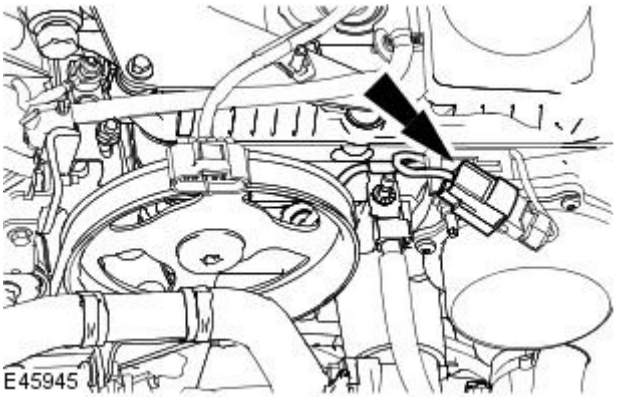

63. Disconnect the CHT sensor electrical connector.

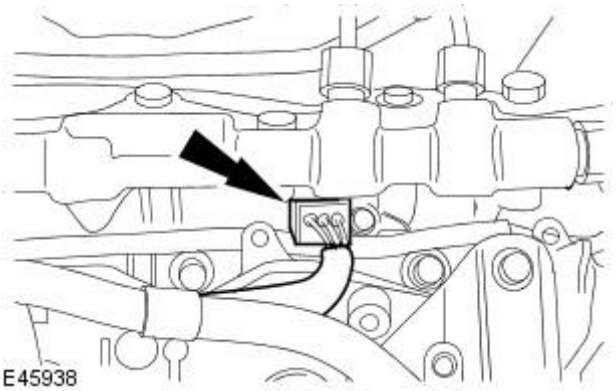

64. Disconnect the camshaft position (CMP) sensor electrical connector.

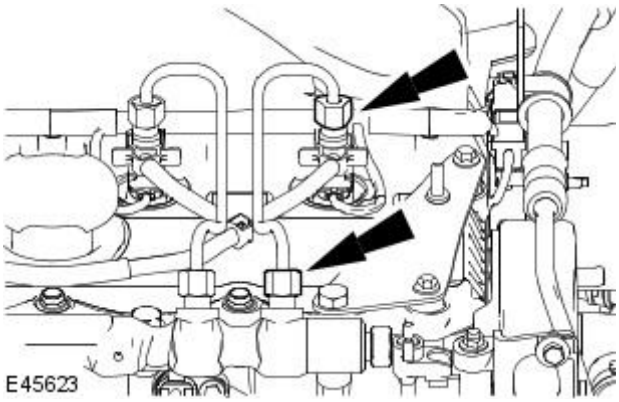

65. CAUTIONS:

Make sure that the high-pressure fuel supply line remains in contact with both the fuel injector and the fuel injection supply manifold until both unions have been detached and cleaned. Failure to follow this instruction may result in foreign matter ingress to the fuel injection system.

Make sure the tool used to loosen the high-pressure fuel supply line unions is used at the top of the unions as this is where there is most material. Failure to follow this instruction may result in damage to the unions.

Make sure that the fuel injector does not move when loosening the high-pressure fuel supply lines. Failure to follow this instruction will result in damage to the fuel injector and the fuel injector sealing washer.

• NOTE: Injector number 4 shown, injector numbers 1, 2 and 3 similar.

Loosen the high-pressure fuel supply line from the fuel injector and fuel injection supply manifold.

66. CAUTION: Make sure that the high-pressure fuel supply line remains in contact with both the fuel injector and the fuel injection supply manifold until both unions have been detached and cleaned. Failure to follow this instruction may result in foreign matter ingress to the fuel injection system.

Using the pneumatic vacuum gun, vacuum foreign material from the high-pressure fuel supply line, the fuel injector and the fuel injection supply manifold.

67. NOTE: Injector number 4 shown, injector numbers 1, 2 and 3 similar.

Remove and discard the high-pressure fuel supply line.

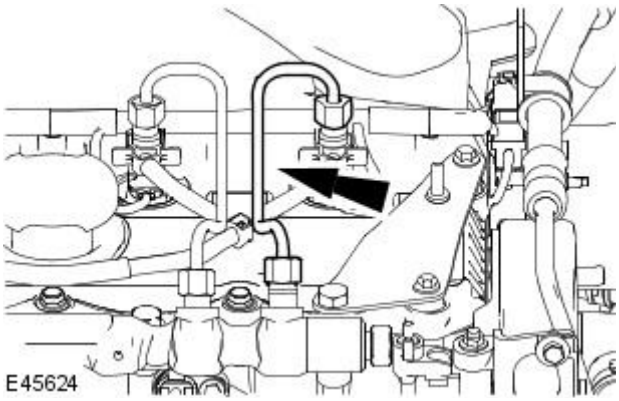

68. Using the pneumatic vacuum gun, vacuum foreign material from the fuel injector and the fuel injection supply manifold.

69. Install blanking caps to the open threaded ports on the fuel injector and the fuel injection supply manifold.

70. NOTE: Injector number 4 shown, injector numbers 1, 2 and 3 similar.

Disconnect the fuel return lines from the fuel injectors.

- Discard the fuel return line O-ring seals.

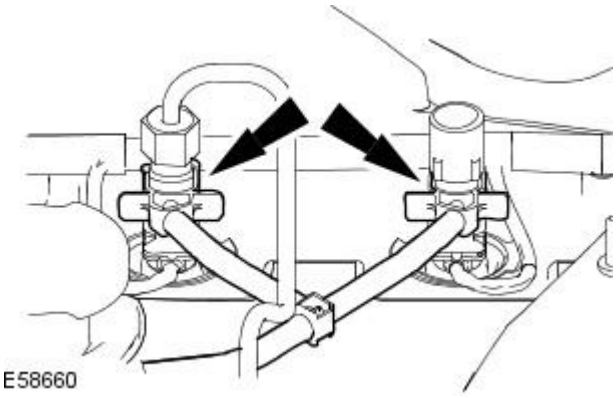

71. NOTE: Injector number 4 shown, injector numbers 1, 2 and 3 similar.

Disconnect the fuel injector electrical connector.

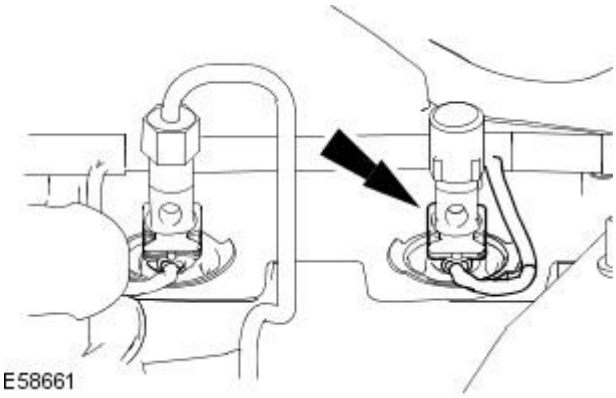

72. NOTE: Injector number 4 shown, injector numbers 1, 2 and 3 similar.

Remove the valve cover fuel injector seal.

- Discard the valve cover fuel injector seal.

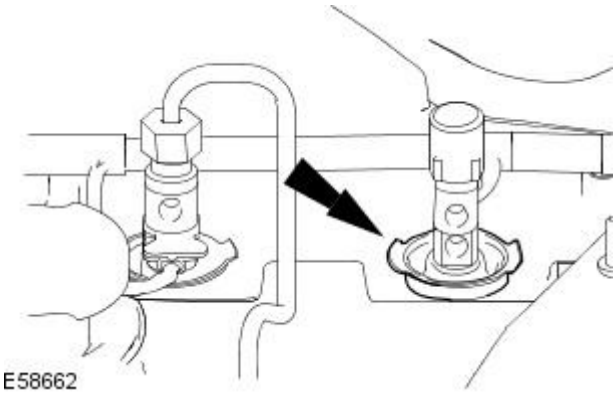

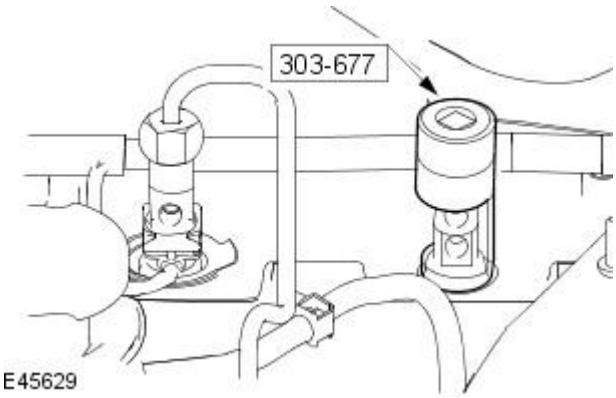

73. CAUTION: Make sure that the fuel injector does not move when loosening the fuel injector locking collar. Failure to follow this instruction will result in damage to the fuel injector and the fuel injector sealing washer.

• NOTE: Injector number 4 shown, injector numbers 1, 2 and 3 similar.

Using the special tool, remove the fuel injector.

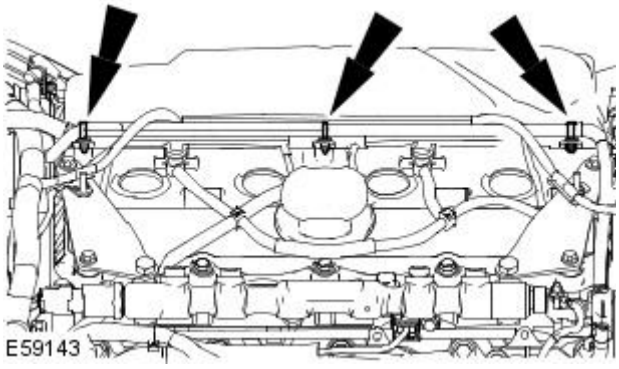

74. Detach the starter motor and injector wiring harness.

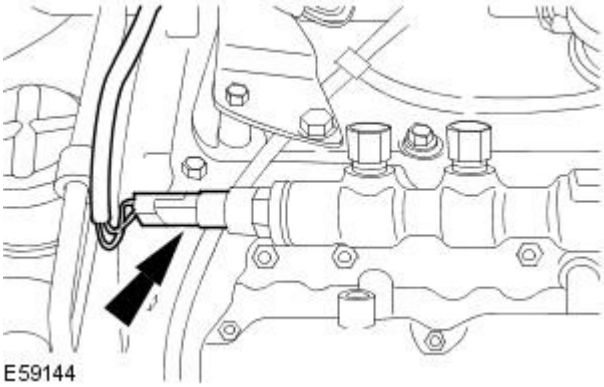

75. Remove the wiring harness.

- Disconnect the fuel pressure sensor electrical connector.

76. CAUTION: Make sure that the high pressure fuel supply line remains in contact with both the fuel pump and the fuel injection supply manifold until both unions have been detached and cleaned. Failure to follow this instruction may result in foreign matter ingress to the fuel injection system.

Using the pneumatic vacuum gun, vacuum foreign material from the high pressure fuel supply line and the fuel pump.

77. Disconnect the fuel injector to fuel pump fuel return line and detach the line from the retaining clip.

- Install blanking plugs to the fuel injector to fuel pump fuel return line male and female connectors.

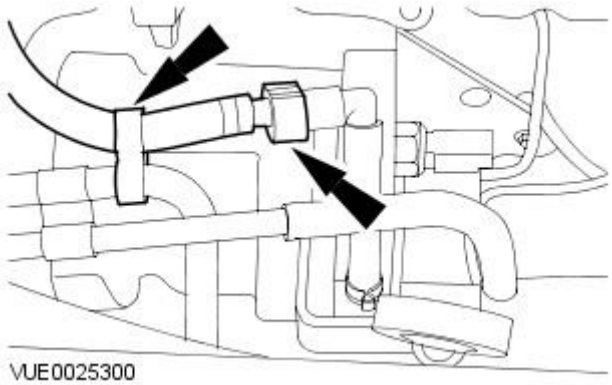

78. Clean the fuel injectors and high pressure fuel supply lines and surrounding areas.
For additional information, refer to: Fuel Injection Component Cleaning (303-04B Fuel Charging and Controls - 2.0L Duratorq-TDCi/2.2L Duratorq-TDCi (110kW/150PS) - Puma, General Procedures).

79. CAUTION: Make sure that the high-pressure fuel supply line remains in contact with both the fuel injector and the fuel injection supply

manifold until both unions have been detached and cleaned. Failure to follow this instruction may result in foreign matter ingress to the fuel injection system.

Using the pneumatic vacuum gun, vacuum foreign material from the high-pressure fuel supply line, the fuel injector and the fuel injection supply manifold.

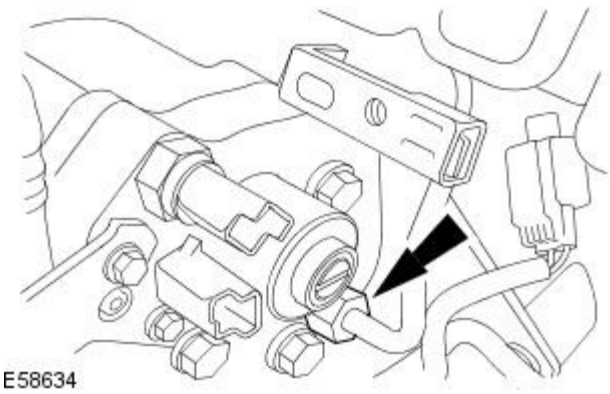

80. CAUTIONS:

Make sure the tool used to loosen the high-pressure fuel supply line union is used at the top of the union as this is where there is most material. Failure to follow this instruction may result in damage to the union.

Maintain pressure on the high-pressure fuel supply line to keep the olive in contact with the fuel pump cone while unscrewing the union. Failure to follow this instruction may result in foreign matter ingress to the fuel injection system.

Loosen the high-pressure fuel supply line at the fuel pump.

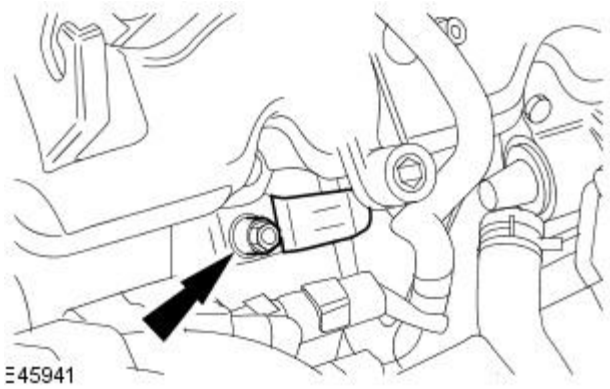

81. Remove the fuel pump to fuel injection supply manifold high pressure pipe retaining bracket.

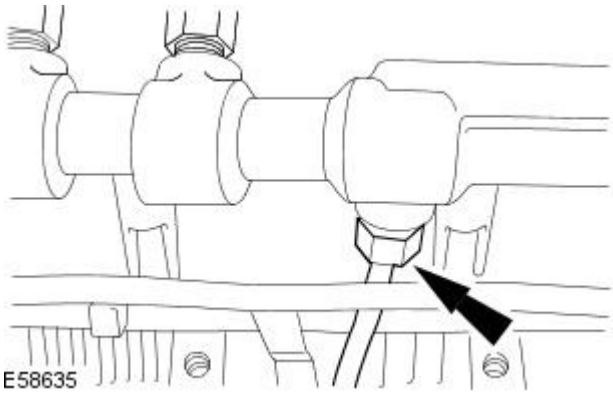

82. CAUTIONS:

Make sure the tool used to loosen the high-pressure fuel supply line union is used at the top of the union as this is where there is most material. Failure to follow this instruction may result in damage to the union.

Maintain pressure on the high-pressure fuel supply line to keep the olive in contact with the fuel injection supply manifold cone while unscrewing the union. Failure to follow this instruction may result in foreign matter ingress to the fuel injection system.

While maintaining the pressure on the high-pressure fuel supply line, clean and vacuum foreign material from the line and union.

Loosen the high-pressure fuel supply line at the fuel injection supply manifold.

83. Remove and discard the high pressure fuel supply line.

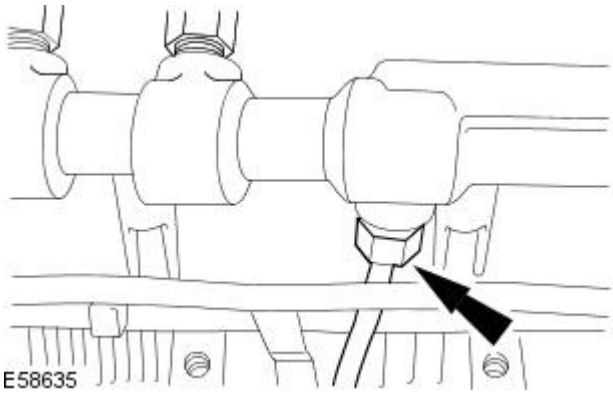

84. Install blanking caps to the open threaded ports on the fuel pump and the fuel injection supply manifold.

85. Clean the fuel injection supply manifold and surrounding areas.
For additional information, refer to: Fuel Injection Component Cleaning (303-04B Fuel Charging and Controls - 2.0L Duratorq-TDCi/2.2L Duratorq-TDCi (110kW/150PS) - Puma, General Procedures).

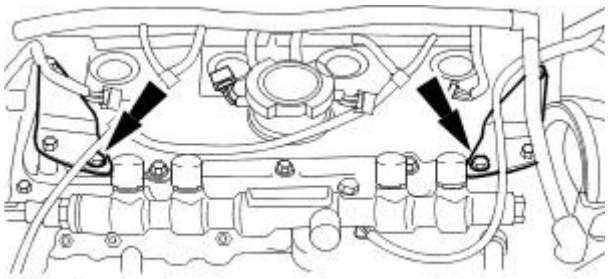
E59145

86. Remove the fuel injection supply manifold retaining bolts.

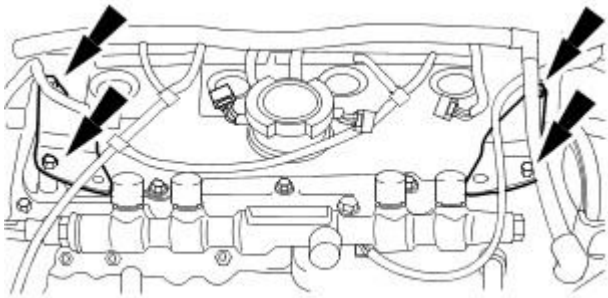
E59146

87. Loosen the fuel injection supply manifold support brackets.

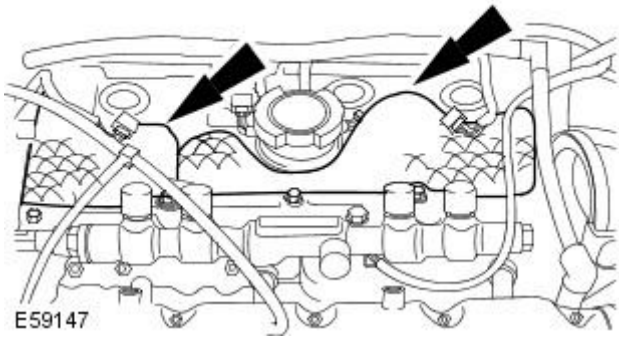
E59147

88. Remove the sound proof padding.

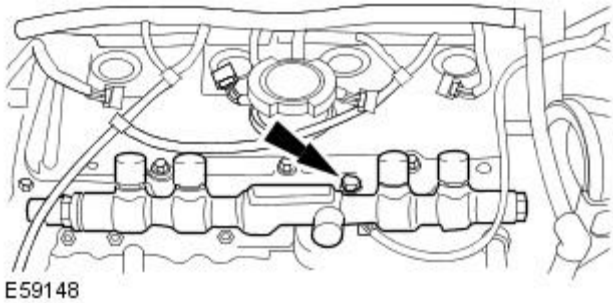
E59148

89. Remove the fuel injection supply manifold.

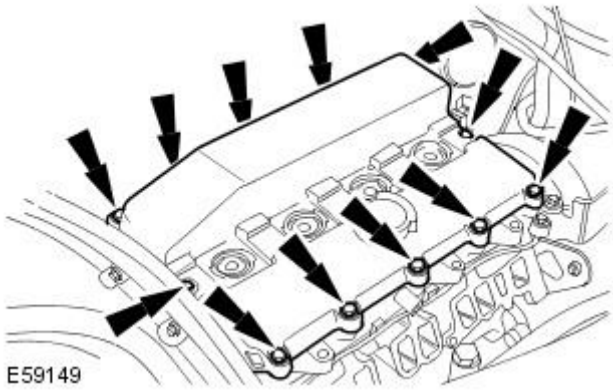
E59149

90. Remove the valve cover.

- Remove and discard the valve cover gasket.

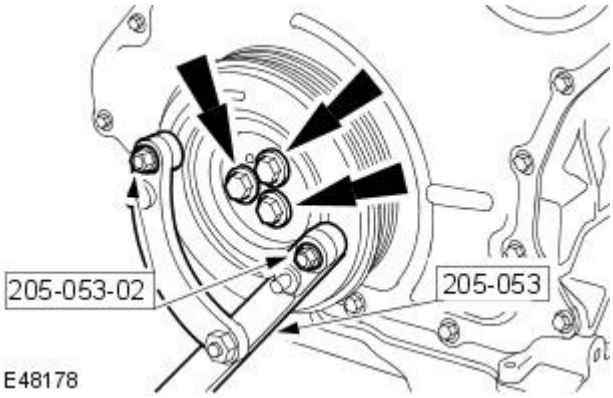

91. Using the special tools, remove the crankshaft damper.

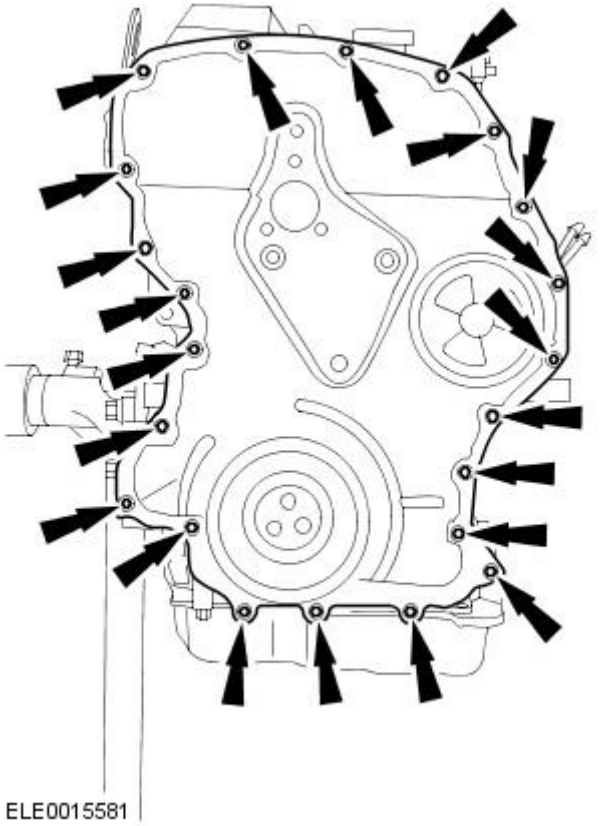

92. Remove and discard the engine front cover.

- Remove the engine front cover retaining nuts and bolts.

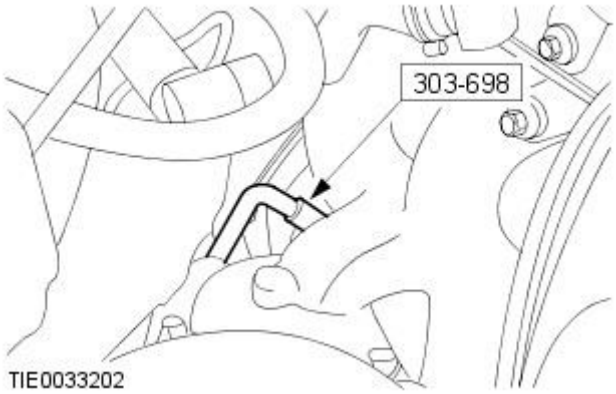

93. Turn the crankshaft to 50 degrees before top dead center (BTDC) and insert the special tool 303-698, through the crankshaft position (CKP) sensor hole.

94. Using suitable 6 mm bar, lock the timing drive sprockets.

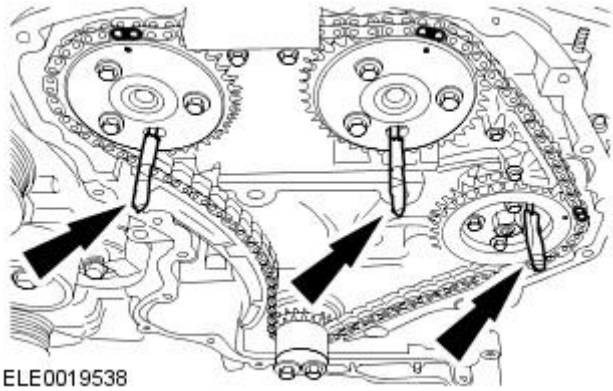

95. Loosen the camshaft sprocket retaining bolts.

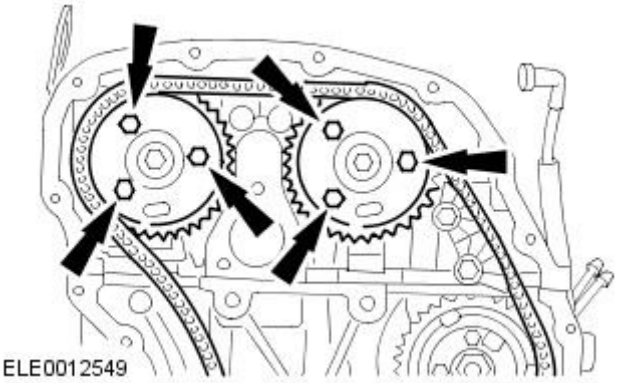

96. Loosen the fuel injection pump sprocket retaining bolts.

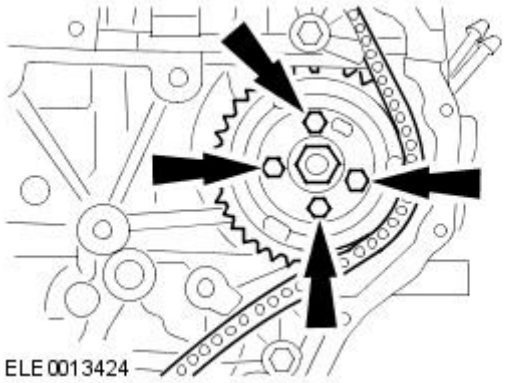

97. Using a suitable tool, retain the timing chain tensioner piston.

1. Retract the pawl.
2. Push the lock in.
3. Insert a pin.

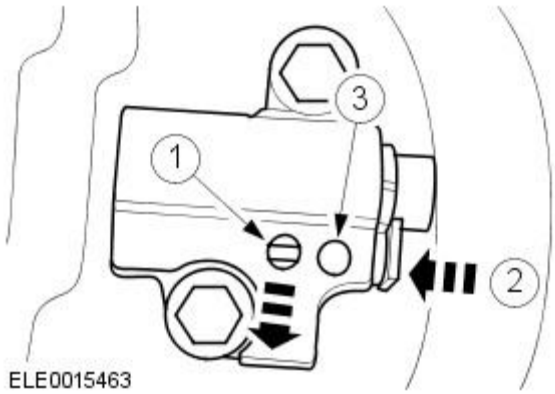

98. Remove the timing chain tensioner and guides.

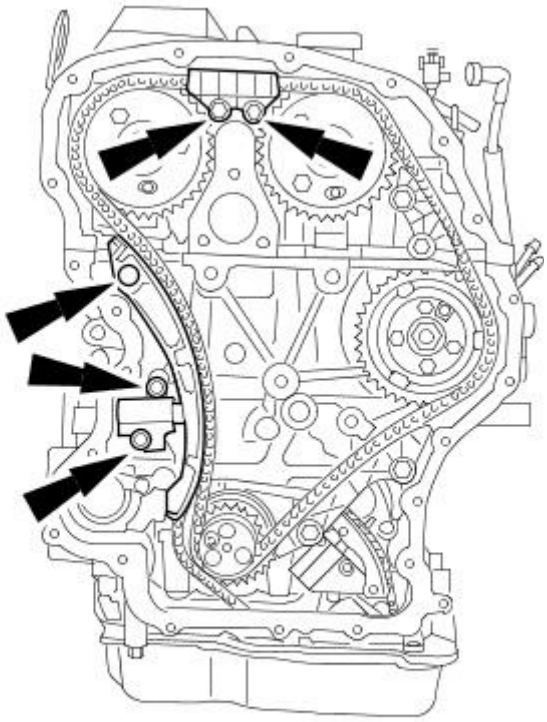

99. Remove the timing chain.

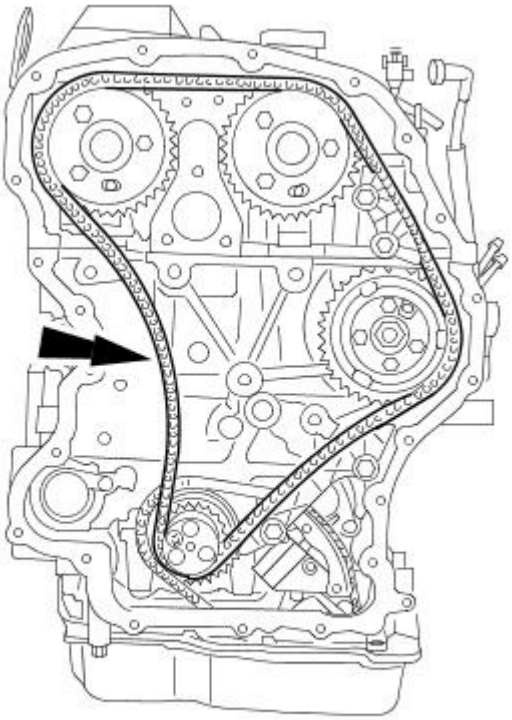

E46626

100. Remove the high-pressure fuel pump retaining bolts.

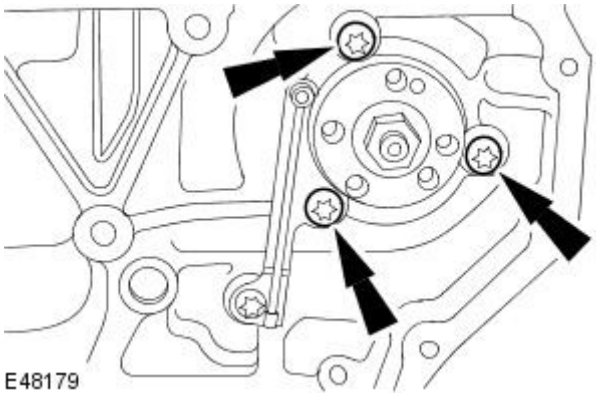

E48179

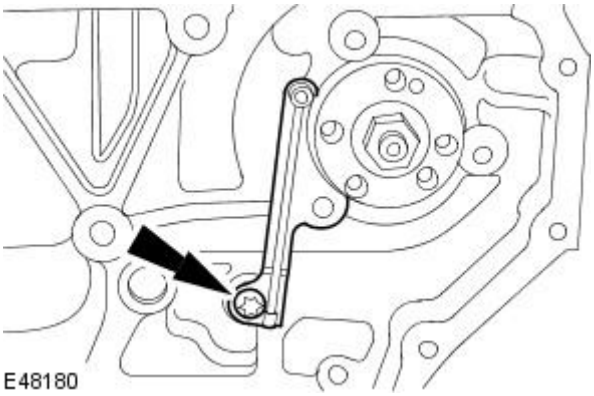

101. Remove the timing chain oil feed pipe.

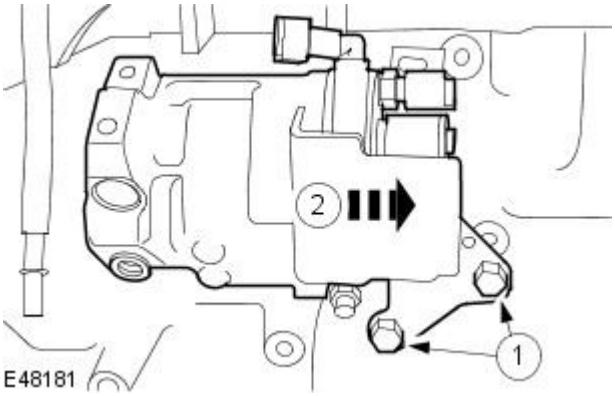

102. Remove the high-pressure fuel pump.

1. Remove the retaining bolts.
2. Remove the high-pressure fuel pump.

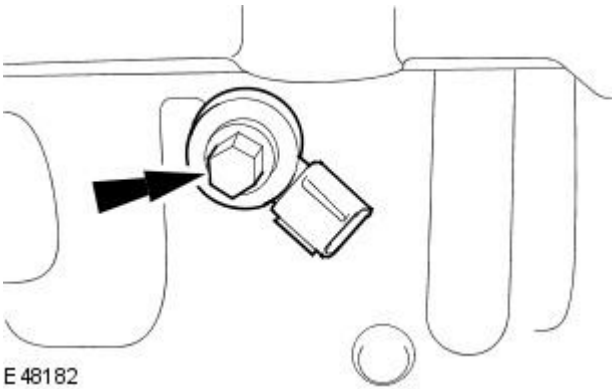

103. Remove the KS.

104. Remove the rocker shafts.

- Remove and discard the retaining bolts.

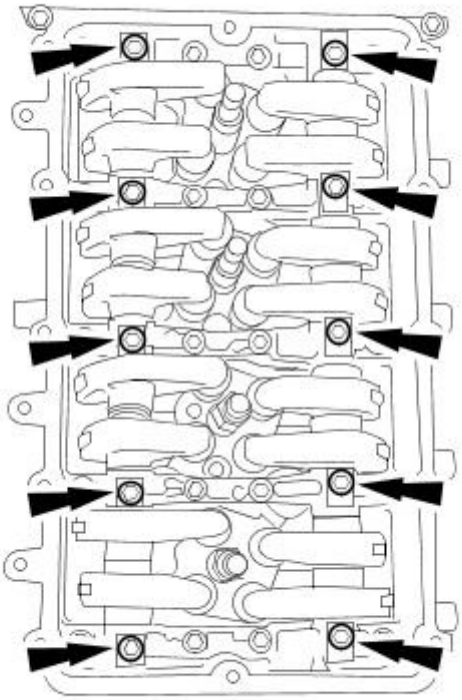

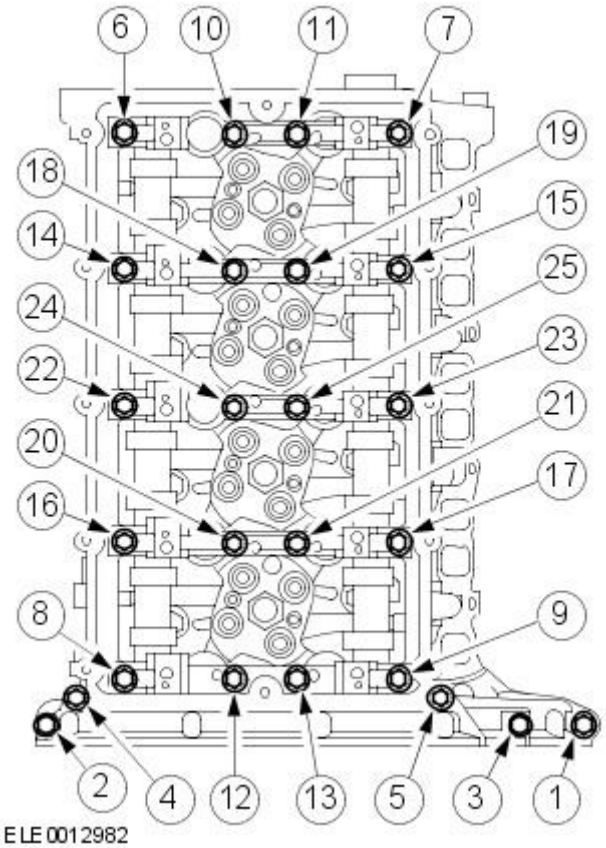

105. CAUTION: Remove the camshaft carrier bolts in the sequence shown.

Remove the camshaft carrier.

106. Remove the camshafts.

- Remove and discard the intake camshaft rear oil seal.

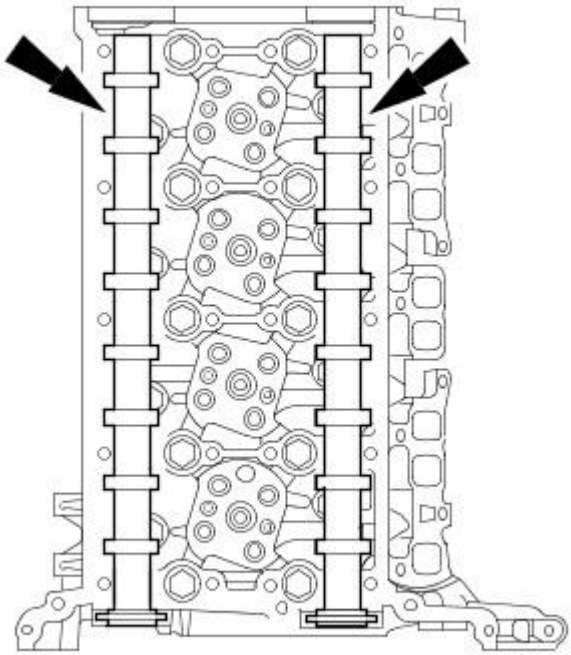

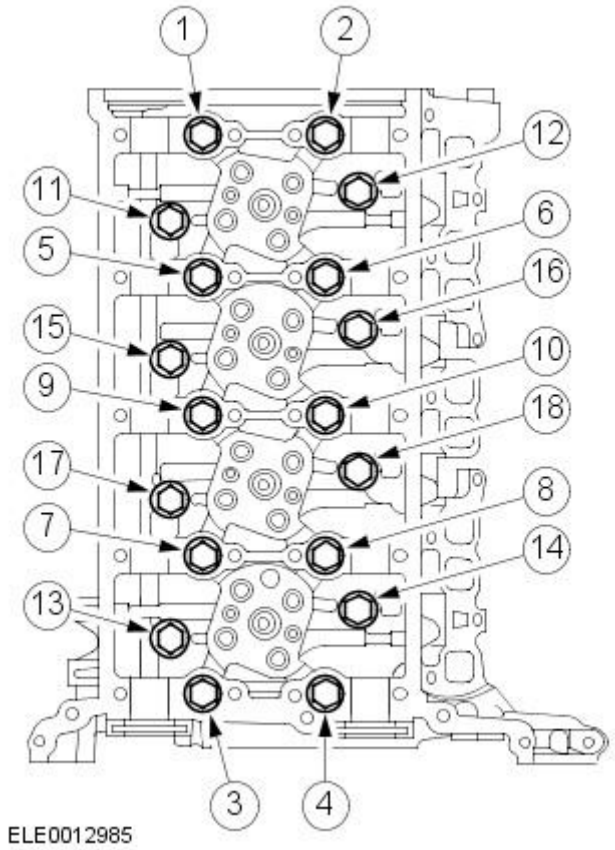

107. CAUTION: Remove the cylinder head bolts in the sequence shown.

Remove the cylinder head.

- Remove and discard the cylinder head gasket and the bolts.

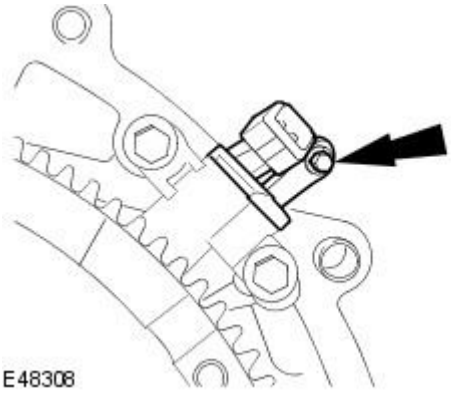

108. Remove the CKP sensor.

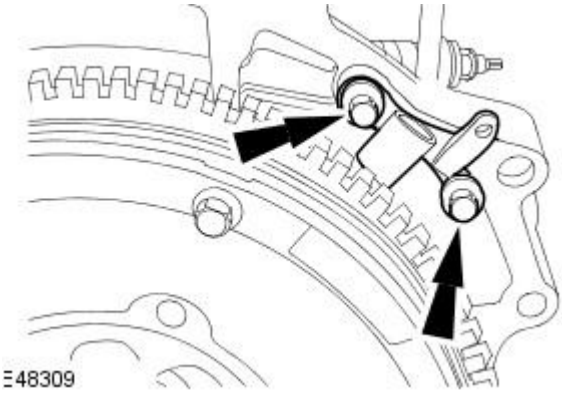

109. Remove the CKP sensor bracket.

110. NOTE: Do not discard the crankshaft rear oil seal carrier.

Remove the crankshaft rear oil seal carrier.

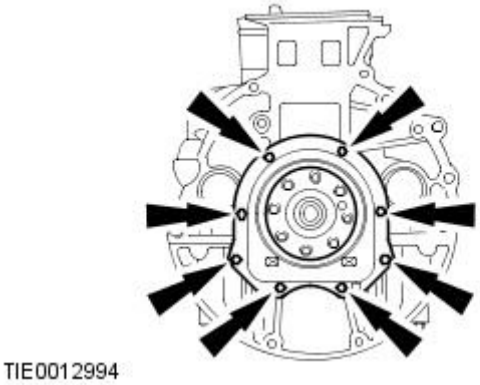

111. Remove and discard the oil pan.

- Remove the oil pan retaining nuts and bolts.

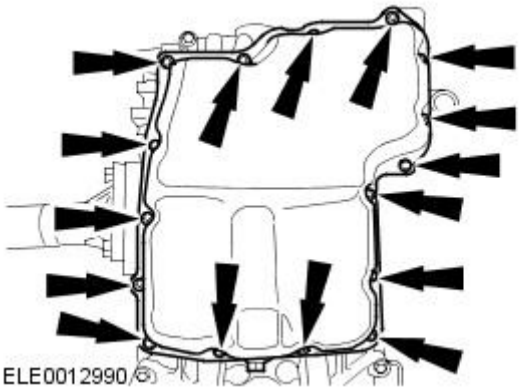

112. Remove the oil pump pickup tube.

- Remove and discard the O-ring seal.

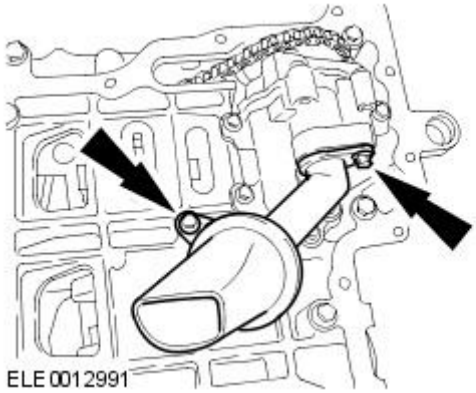

113. Remove the oil pump.

- Remove the chain from the crankshaft sprocket.

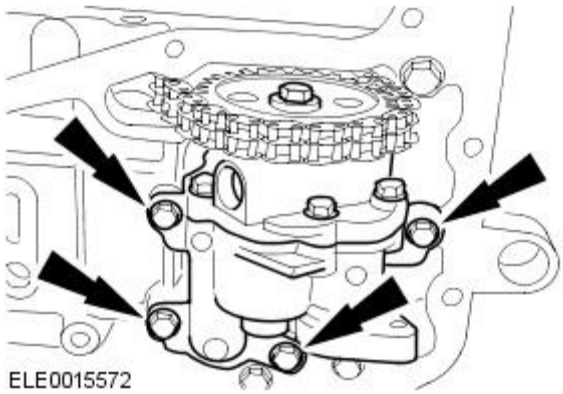

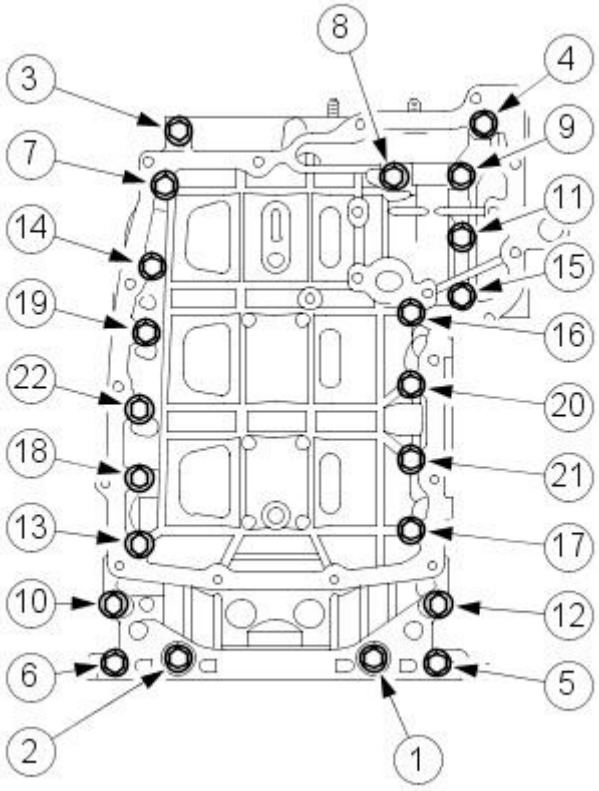

ELE0015834

114. CAUTION: Remove the ladder frame bolts in the sequence shown.

Remove the ladder frame.

- Remove and discard the ladder frame gasket.

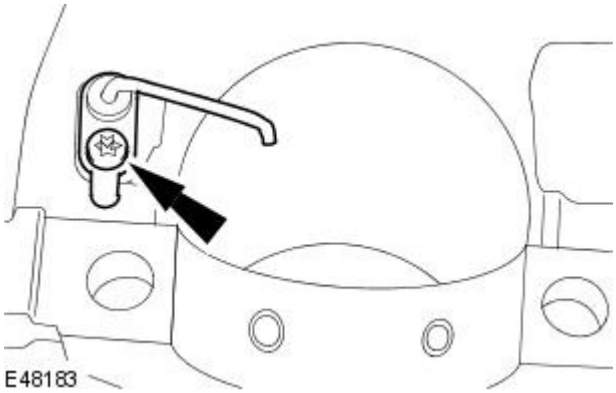
E48183

115. NOTE: One piston oil cooler jet shown, other piston oil cooler jets similar.

Remove the piston oil cooler jets.

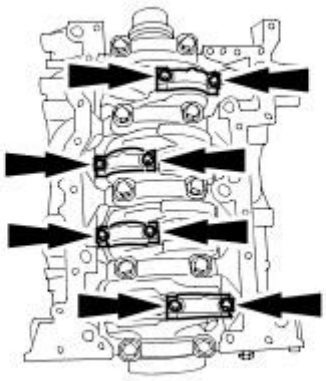
ELE0012996

116. CAUTION: Keep the connecting rod bearing caps in order for installation.

Remove the connecting rod bearing caps.

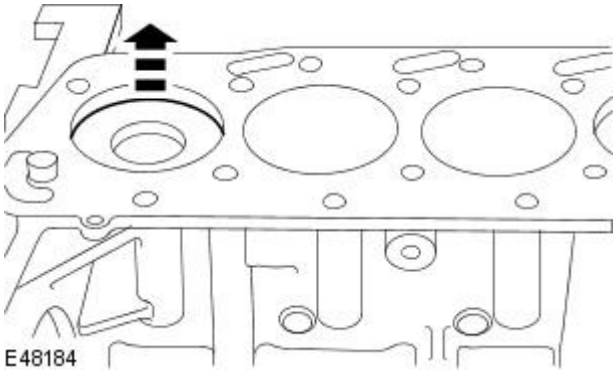
E48184

117. CAUTION: Match the piston and connecting rods to the connecting rod caps.

Remove the pistons.

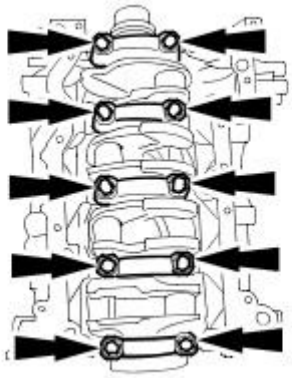

ELE0013006

118. CAUTION: Keep the crankshaft main bearing caps in order for installation.

Remove the crankshaft main bearing caps.

119. Remove the crankshaft.

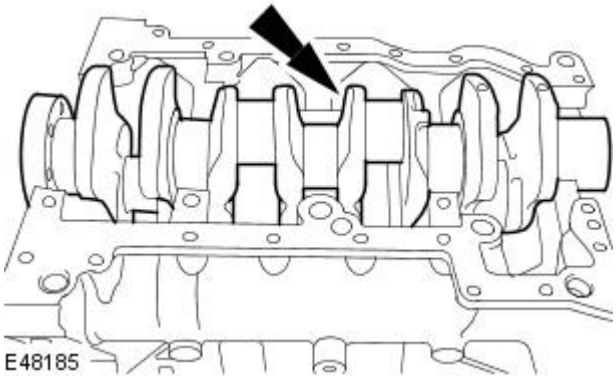

E48185

Engine - 2.0L Duratorq-TDCi / 2.2L Duratorq-TDCi (110kW / 150PS) - Puma - Engine

Assembly

Special Tool(s)	
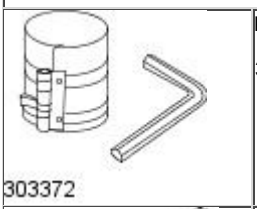	Piston ring compressor 303-372
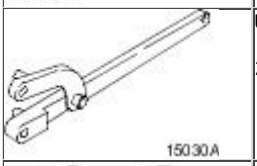	Universal Flange Holding Wrench 205-053
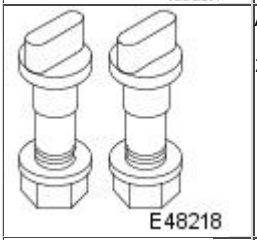	Adapter for 205-053 205-053-02
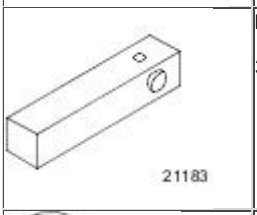	Bedplate alignment plate 303-1095
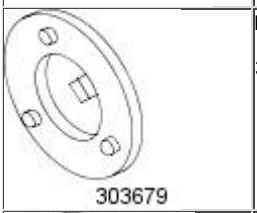	Remover/Installer Crankshaft Front Oil Seal 303-679
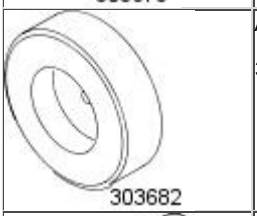	Aligner, Engine Front Cover 303-682
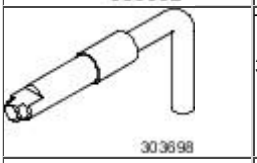	Timing Tool, Crankshaft 303-698
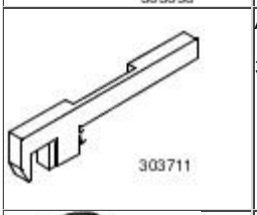	Aligner, Fuel Injector 303-711
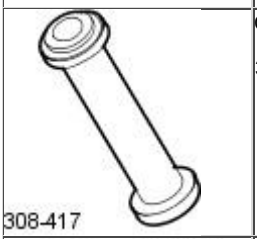	Oil seal installer 308-417
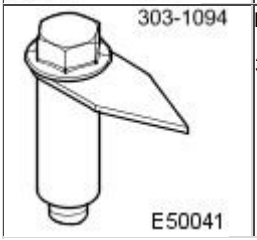	Pointer, top dead center (TDC) 303-1094

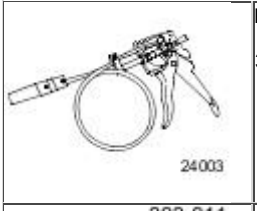	Remover/Installer, Cooling Hose Clamp 303-397
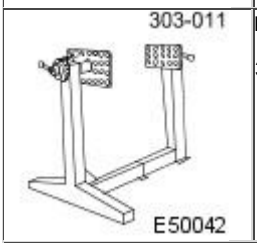	Engine stand 303-011

Assembly

All vehicles

• WARNINGS:

Do not smoke or carry lighted tobacco or open flame of any type when working on or near any fuel related components. Highly flammable mixtures are always present and may ignite. Failure to follow these instructions may result in personal injury.

This procedure involves fuel handling. Be prepared for fuel spillage at all times and always observe fuel handling precautions. Failure to follow these instructions may result in personal injury.

• CAUTIONS:

Diesel fuel injection equipment is manufactured to very precise tolerances and fine clearances. It is therefore essential that absolute cleanliness is observed when working with these components. Always install blanking plugs to any open orifices or lines.

Do not disassemble or clean inside the fuel injection supply manifold, even with an ultrasonic cleaner. Always install a new fuel injection supply manifold and fuel lines when required.

Always carry out the cleaning process before carrying out any repairs to the fuel injection system components. Failure to follow this instruction may result in foreign matter ingress to the fuel injection system.

1. Clean the mating faces of the cylinder head and cylinder block with suitable metal surface cleaner.

2. NOTE: Lubricate the crankshaft main bearing shells with clean engine oil.

Install the crankshaft main bearing shells.

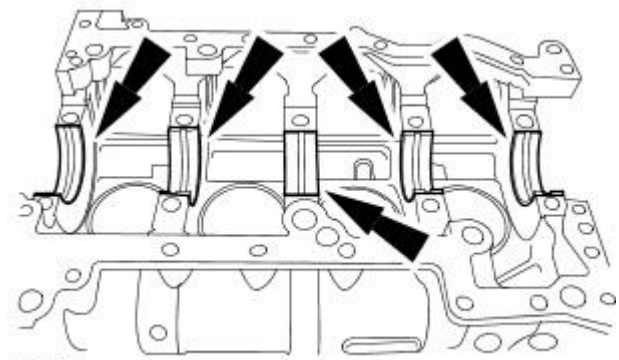

E48240

3. NOTE: Lubricate the crankshaft and the crankshaft main bearing shells with clean engine oil.

Install the crankshaft.

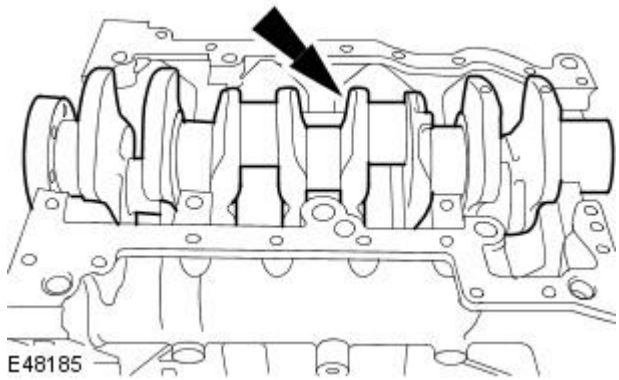

E48185

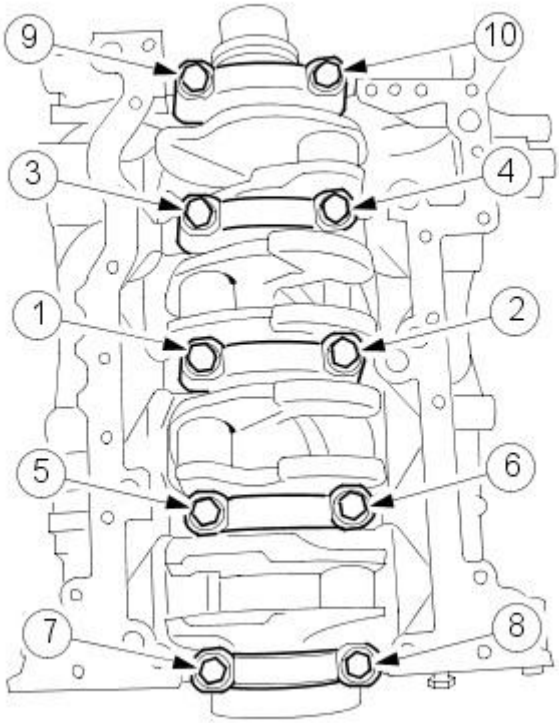

TIE0018206

4. CAUTIONS:

Assemble caps with arrows pointing forward. Caps are identified from front to rear, F, 2, 3, 4, R.

Crankshaft main bearing cap bolts must only be used four times.

Tighten the bolts in three stages in the sequence shown.

• NOTE: Lubricate the crankshaft and the crankshaft main bearing shells with clean engine oil.

• NOTE: Stamp the bolt heads with a center punch to indicate usage.

Install the crankshaft main bearing caps.

- Stage 1: 45 Nm.
- Stage 2: 80 Nm.
- Stage 3: 80 degrees.

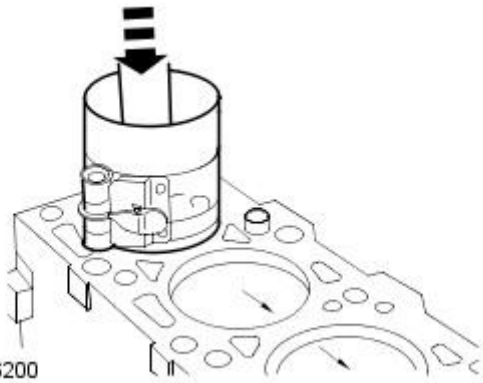

ELE0016200

5. Lubricate the cylinder bores and pistons with clean engine oil.

6. CAUTION: Make sure the connecting rod does not damage the crankshaft big end bearing surface.

• NOTE: The piston ring gaps must be distributed evenly around the circumference of the piston. This also applies to the oil control ring elements. Align the piston ring gaps at 120 degrees to each other.

• NOTE: The arrow on the piston must point to the front to the engine.

Using the special tool 303-372, install the pistons.

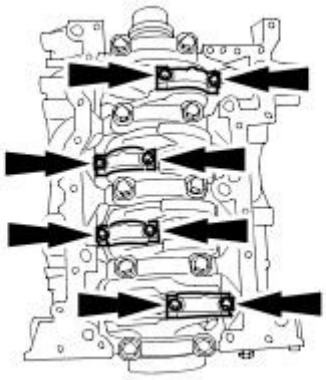

ELE0012996

7. Lubricate the connecting rod bearing shells with clean engine oil.

8. CAUTIONS:

Connecting rod bearing cap bolts must only be used four times.

Make sure that the fracture split connecting rod bearing cap is installed correctly.

• NOTE: Stamp the bolt heads with a center punch to indicate usage.

• NOTE: The identification marks on the big-end bearing caps must point to the front of the engine.

Install the connecting rod bearing caps.

- Tighten the bolts in two stages.
- Stage 1: 30 Nm.
- Stage 2: 80 degrees.

9. Install the piston oil cooler jets.

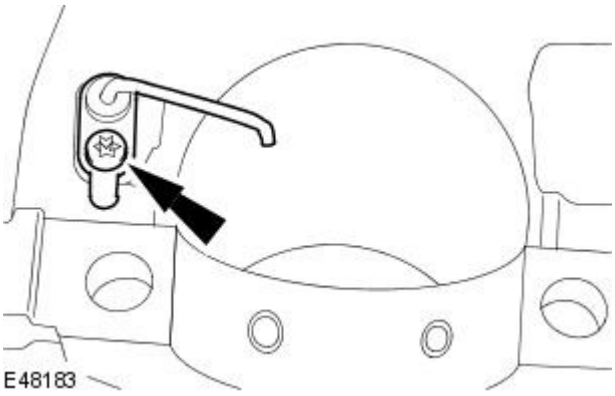

10. CAUTION: Do not trim or damage protruding foam pads.

• NOTE: Install new ladder frame gaskets.

• NOTE: Do not fully tighten the ladder frame retaining nuts and bolts at this stage.

Install the ladder frame.

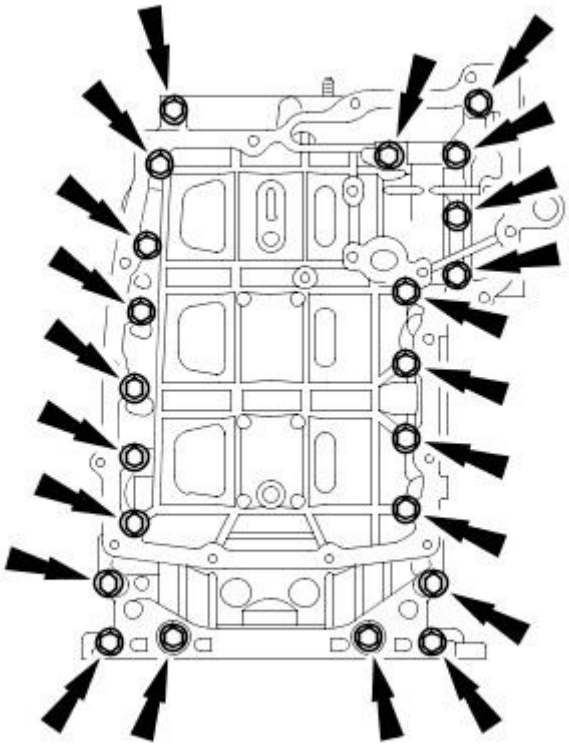

11. CAUTION: The ladder frame and the cylinder block must be aligned so that the side clearance does not exceed 0.05 mm overlap to 0.05 mm gap.

Using the special tool 303-1095 align the ladder frame to the cylinder block.

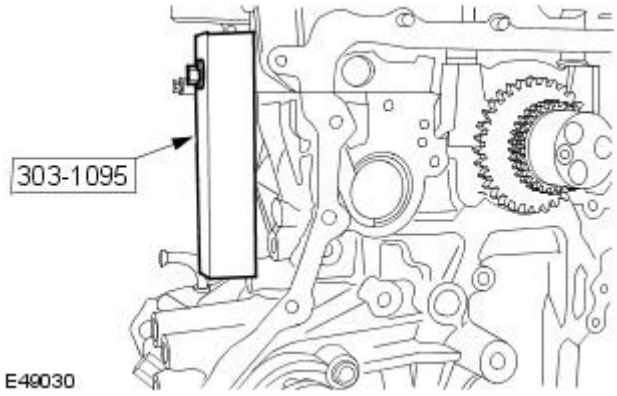

12. Install the old crankshaft rear seal and carrier.

TIE0012994

13. CAUTION: The ladder frame and the cylinder block must be aligned so that the rear clearance does not exceed 0.01 mm overlap to 0.2 mm gap.

Using a suitable straight edge, align the ladder frame to the cylinder block.

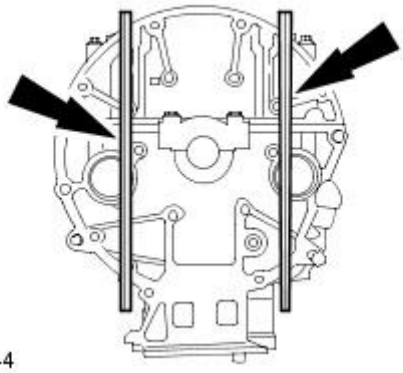

ELE0013444

14. NOTE: Tighten the nuts and bolts in the sequence shown.

Tighten the ladder frame nuts and bolts.

- Tighten to 23 Nm.

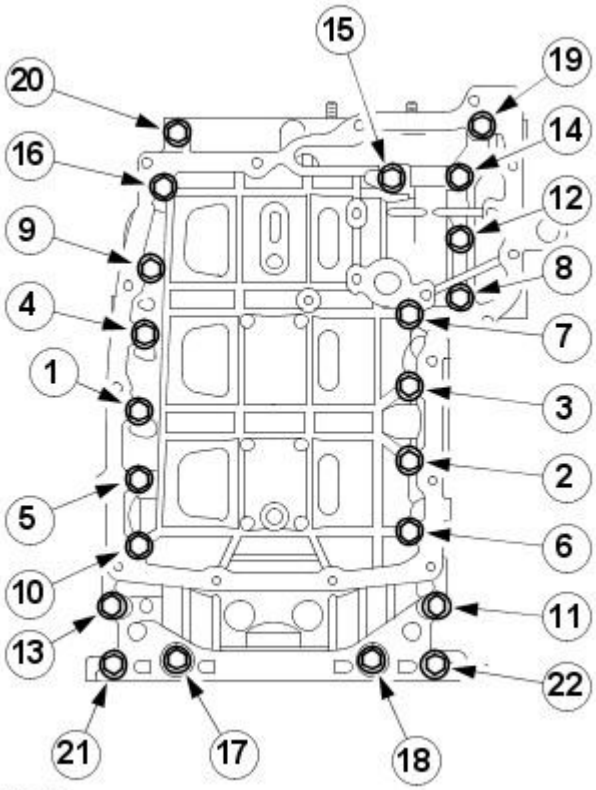

E48312

15. Remove the old crankshaft rear seal and carrier.

- Remove and discard the crankshaft rear oil seal.

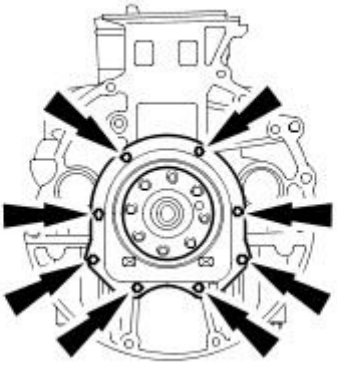

16. NOTE: Install a new crankshaft rear oil seal carrier and crankshaft rear oil seal carrier retaining bolts.

• NOTE: A new crankshaft rear oil seal carrier is supplied with an alignment sleeve that must be removed following installation.

• NOTE: Tighten the nuts and bolts in the sequence shown.

Install the crankshaft rear oil seal carrier.

- Tighten to 10 Nm.

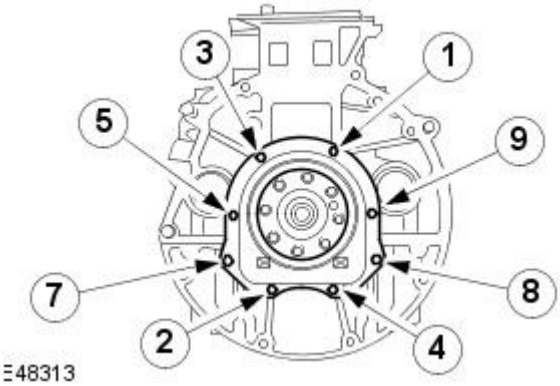

17. Remove the special tool.

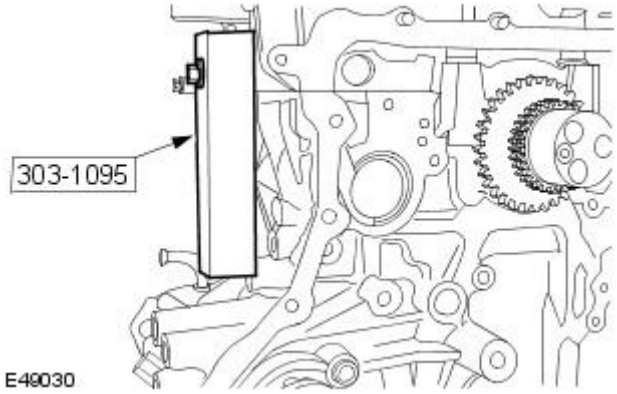

18. NOTE: Do not fully tighten the oil pump retaining bolts at this stage.

Install the oil pump and oil pump chain.

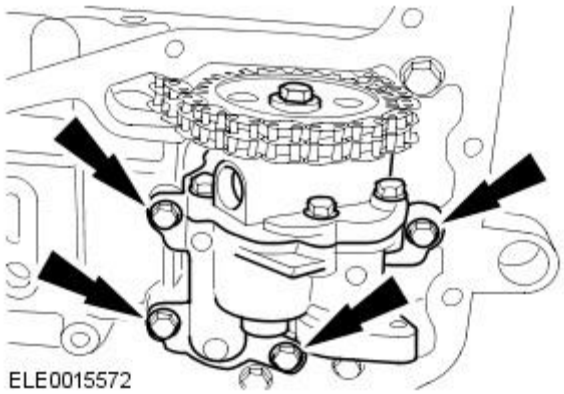

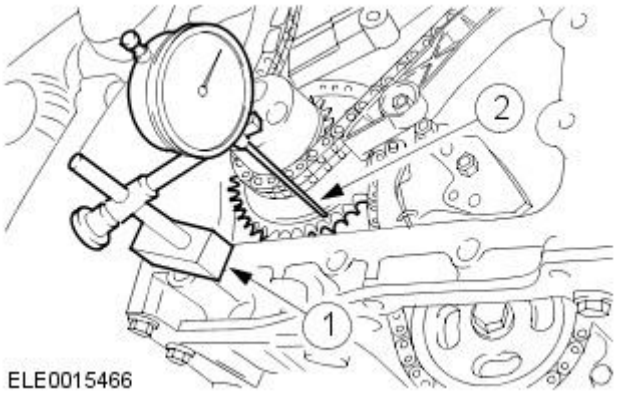

19. Using a suitable dial indicator gauge take a reference measurement from the front face of the crankshaft sprocket.

1. Position the dial gauge holding fixture on the cylinder block.
2. Position the dial indicator gauge plunger on the crankshaft sprocket and set the dial to zero.

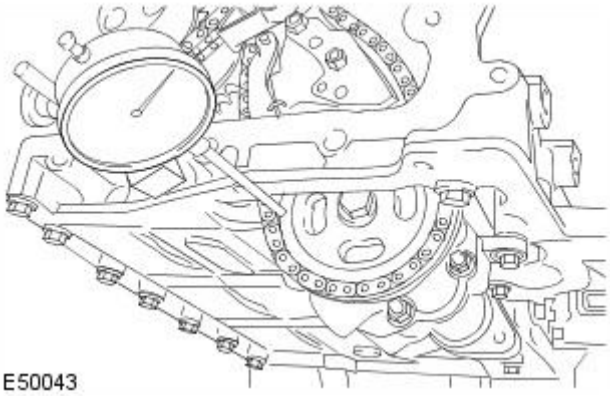

20. NOTE: Take measurements at two different points on the oil pump sprocket.

Using the dial indicator gauge align the oil pump sprocket and tighten the oil pump retaining bolts.

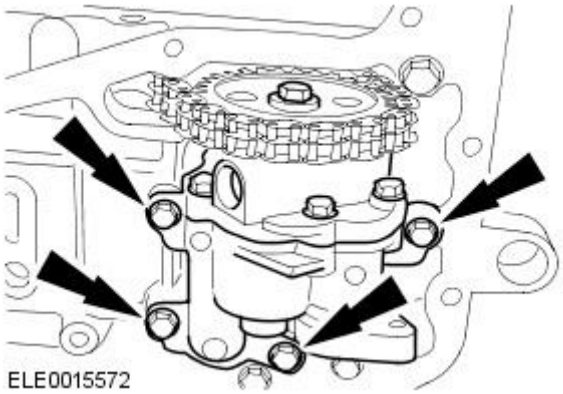

21. Check the alignment of the oil pump sprocket with the crankshaft sprocket. Repeat the alignment procedure if necessary.

22. Tighten to 10 Nm.

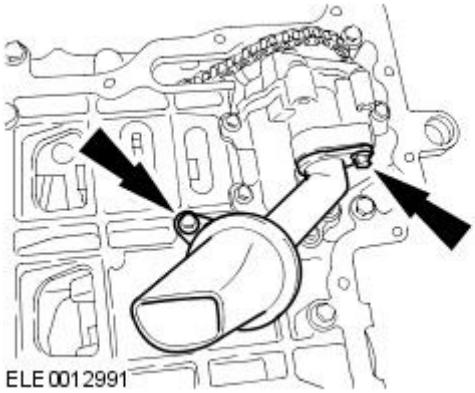

23. Check the alignment of the oil pump sprocket with the crankshaft sprocket. Repeat the alignment procedure if necessary.

24. Install the oil pump tensioner.

25. NOTE: Install a new O-ring seal.

Install the oil pump pickup tube.

- Tighten to 10 Nm.

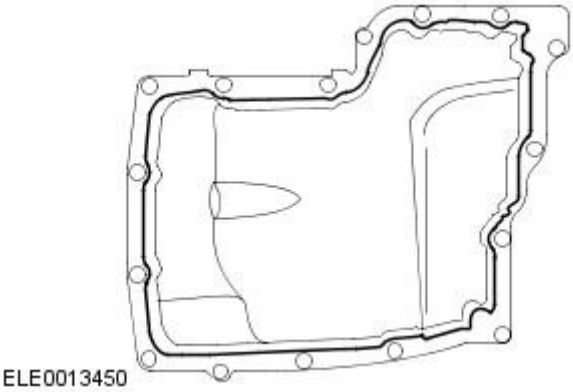

26. CAUTIONS:

A new oil pan must be installed

Install the oil pan within five minutes of applying the sealer.

Apply a 3 mm bead of sealer WSE-M4G323-A4 to the oil pan.

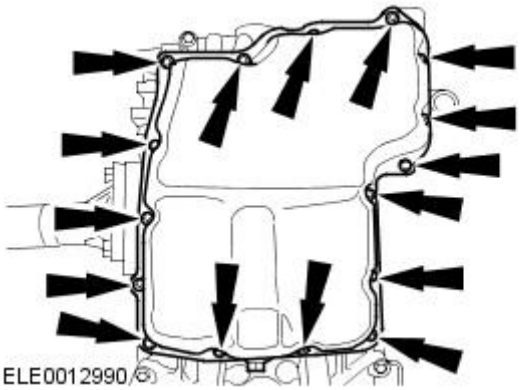

27. NOTE: Do not fully tighten the oil pan retaining bolts at this stage.

Install the oil pan.

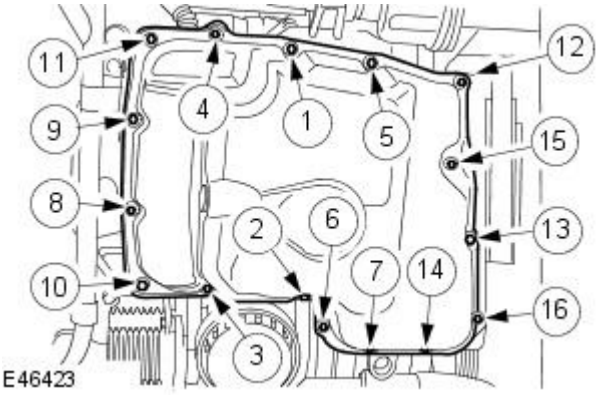

28. NOTE: Tighten the bolts in the sequence shown in two stages.

Tighten the oil pan retaining bolts in the sequence shown.

- Stage 1: Tighten bolts 1 through 16 to 7 Nm.
- Stage 2: Tighten bolts 1 through 16 to 14 Nm.

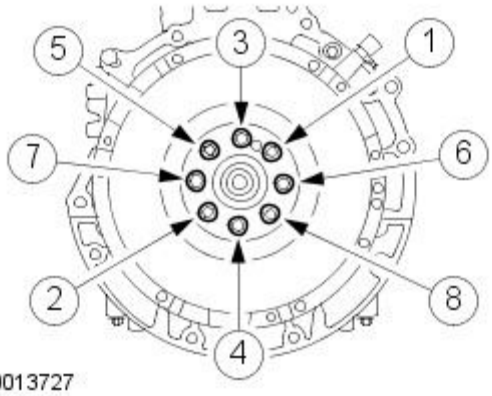

29. NOTE: Install new flywheel retaining bolts.

• NOTE: Tighten the retaining bolts in the sequence shown in three stages.

Install the flywheel.

- Stage 1: 25 Nm.
- Stage 2: 40 Nm.
- Stage 3: 48 degrees.

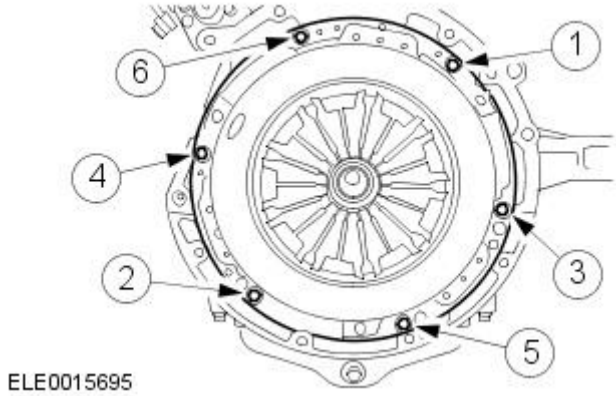

30. NOTE: Tighten the retaining bolts in the sequence shown.

Install the clutch disc and pressure plate.

- Tighten to 29 Nm.

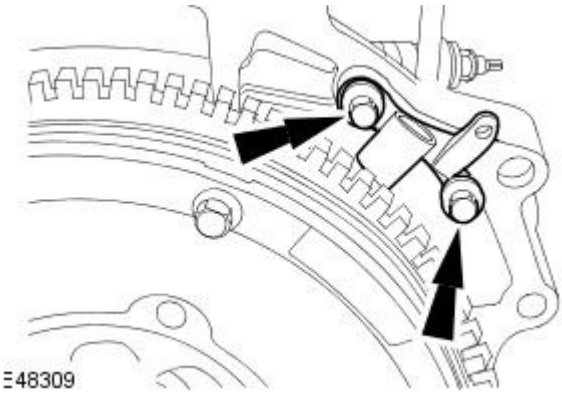

31. NOTE: Do not fully tighten the crankshaft position sensor bracket retaining bolts at this stage.

Install the crankshaft position (CKP) sensor bracket.

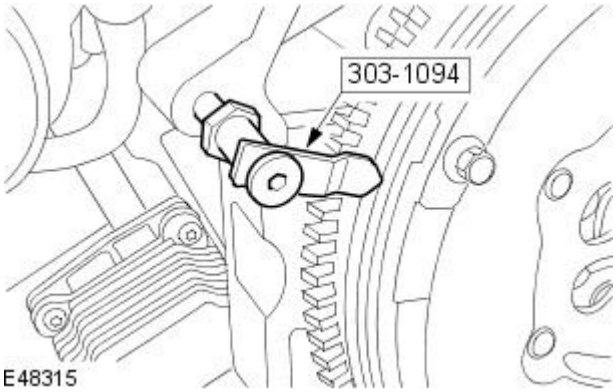

32. NOTE: After installation do not move the special tool.

Install the special tool.

33. Rotate the crankshaft until piston number one is approximately 10 mm before top dead center (TDC).

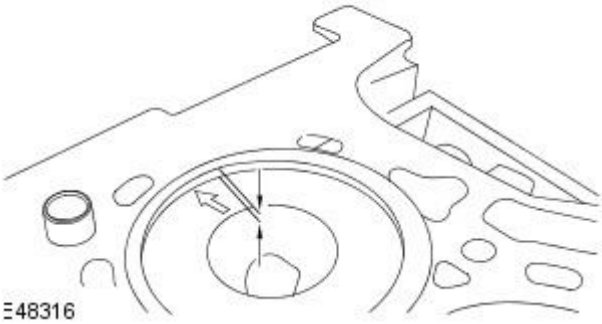

34. Zero the dial indicator gauge.

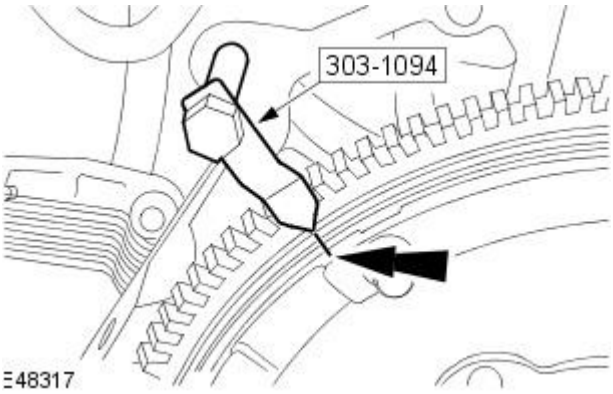

35. Mark the position on the flywheel primary mass.

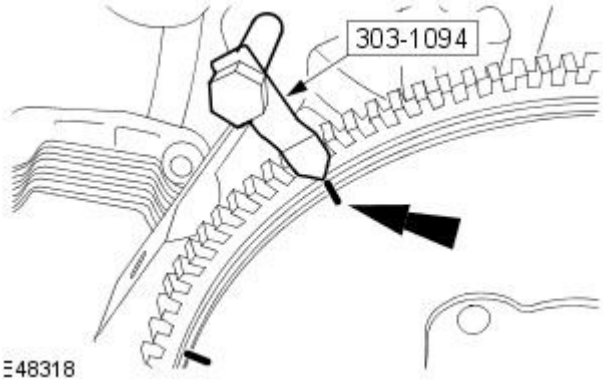

36. NOTE: Rotate the crankshaft counterclockwise.

Rotate the crankshaft until the piston number one achieves zero on the dial indicator gauge.

- Mark the position on the flywheel primary mass.

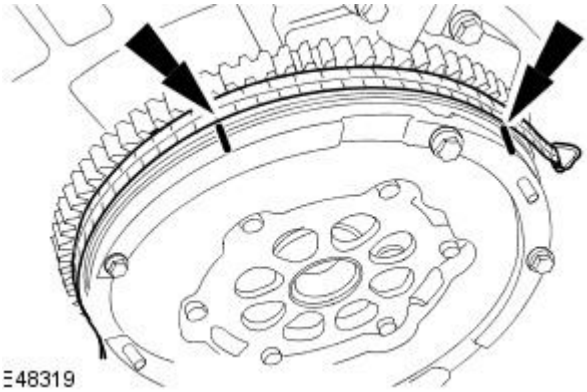

37. Repeat the previous steps to make sure that the marking is correct.

38. NOTE: The middle of the markings is TDC.

Measure the distance between the two marks.

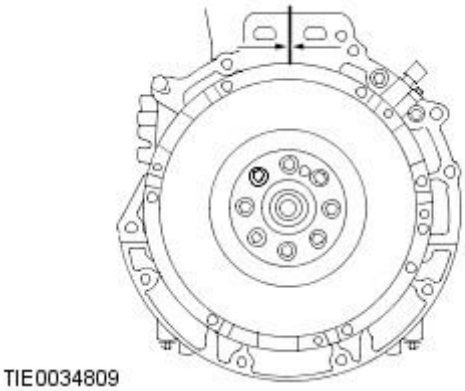

39. Divide the amount by two and mark the TDC position on the flywheel primary mass.

40. Measure the circumference of the flywheel primary mass.

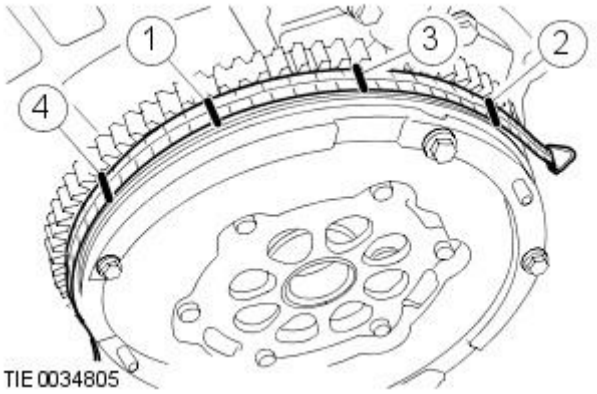

41. NOTE: Mark the calculated amount on the flywheel primary mass by measuring from TDC counterclockwise.

Multiply the circumference by 0.1388.

1. First mark.
2. Second mark.
3. Determined TDC.
4. Determined 50 degrees before top dead center (BTDC).

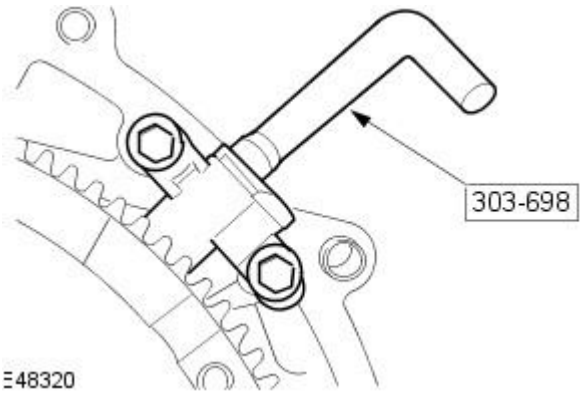

42. NOTE: Rotate the crankshaft in the normal direction of rotation to the mark of the calculated 50 degrees BTDC.

Install the special tool 303-698.

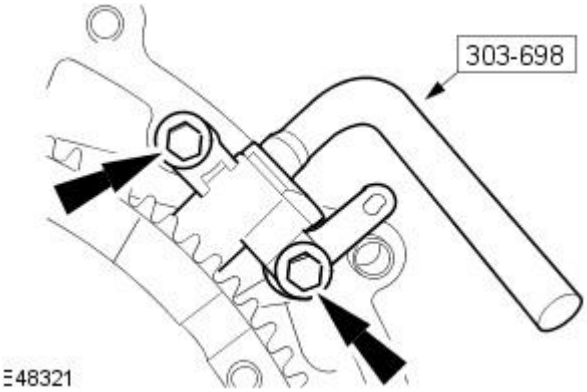

43. Tighten the CKP sensor bracket retaining bolts.

- Tighten to 23 Nm.

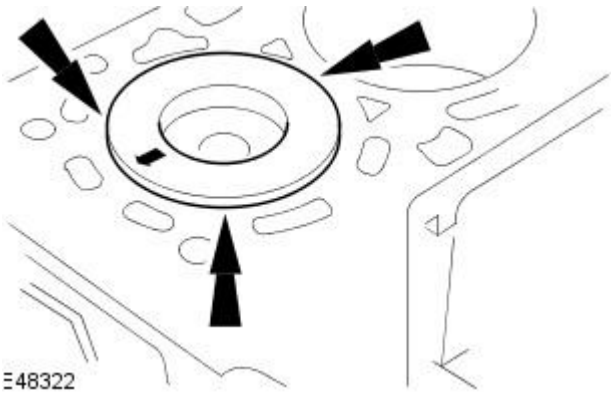

44. Clean the cylinder block mating face and the piston.

45. NOTE: Measure the piston protrusion of each cylinder at top dead center (TDC).

Measure the distance between the piston crown and the cylinder block at the points indicated.

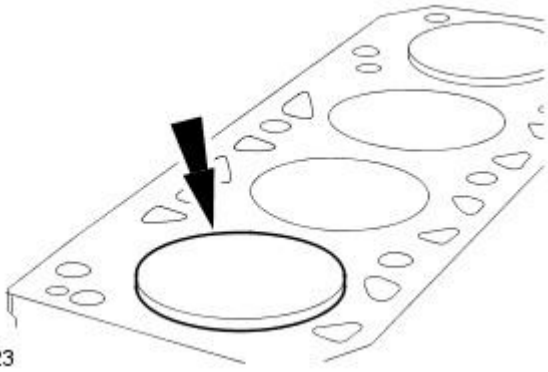

E48323

46. NOTE: The largest measurement determines the choice of the cylinder head gasket.

Using a suitable tool, measure the piston protrusion.

47. Determine the cylinder head gasket thickness.
For additional information, refer to: Specifications (303-01B Engine - 2.0L Duratorq-TDCi/2.2L Duratorq-TDCi (110kW/150PS) - Puma, Specifications).

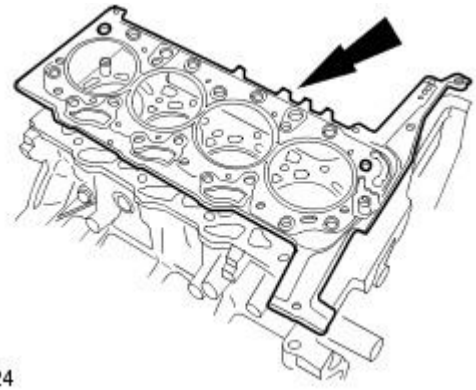

E48324

48. CAUTION: The thickness of the new cylinder head gasket depends on the piston protrusion (hole/tooth marked).

Install a new cylinder head gasket.

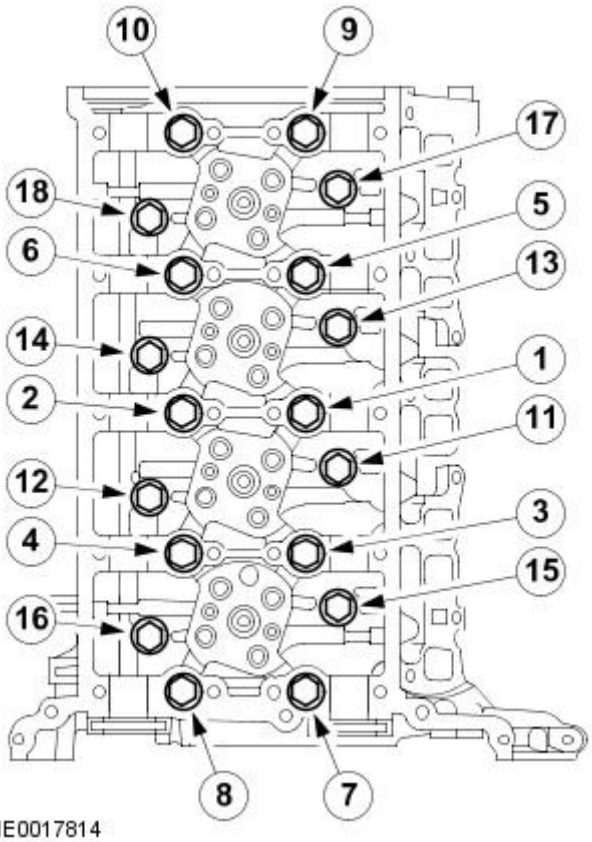

TIE0017814

49. CAUTION: Install new cylinder head bolts.

Install the cylinder head.

- Tighten the bolts in the sequence shown in six stages.
- Stage 1: Tighten bolts 1 through 10 to 20 Nm.
- Stage 2: Tighten bolts 11 through 18 to 10 Nm.
- Stage 3: Tighten bolts 1 through 10 to 40 Nm.
- Stage 4: Tighten bolts 11 through 18 to 20 Nm.
- Stage 5: Tighten bolts 1 through 10 to 180 degrees.
- Stage 6: Tighten bolts 11 through 18 to 180 degrees.

50. Apply a 2.5 mm diameter bead of sealer WSE-M4G323-A4 to the mating face of the cylinder head.

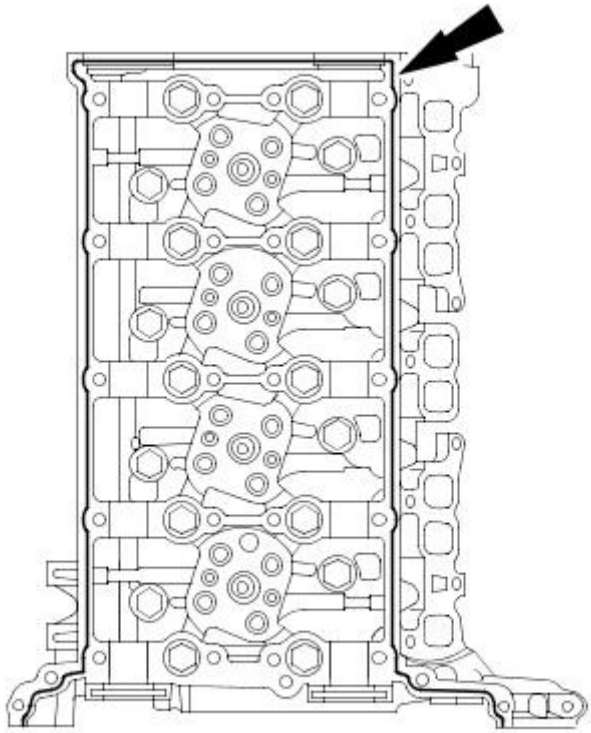

ELE0013422

51. Remove the camshafts.

- Remove and discard the intake camshaft rear oil seal.

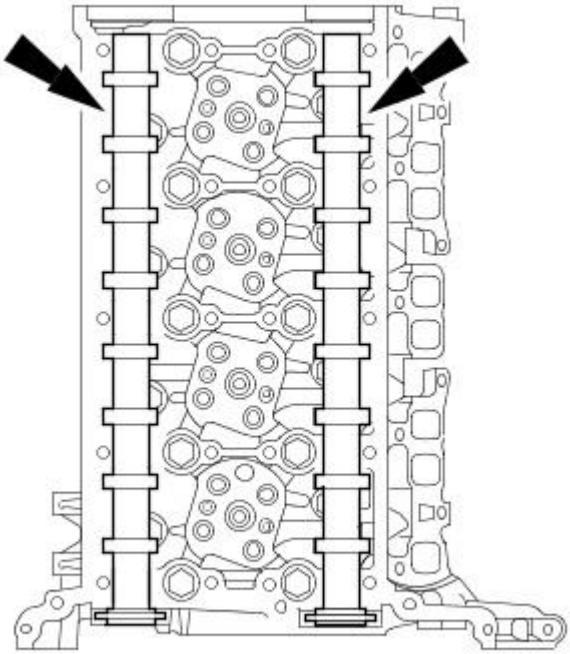

E48216

52. NOTE: Tighten the bolts in the sequence shown in two stages.

Install the camshaft carrier.

- Stage 1: Tighten bolts 1 through 22 to 23 Nm.
- Stage 2: Tighten bolts 23 through 25 to 10 Nm.

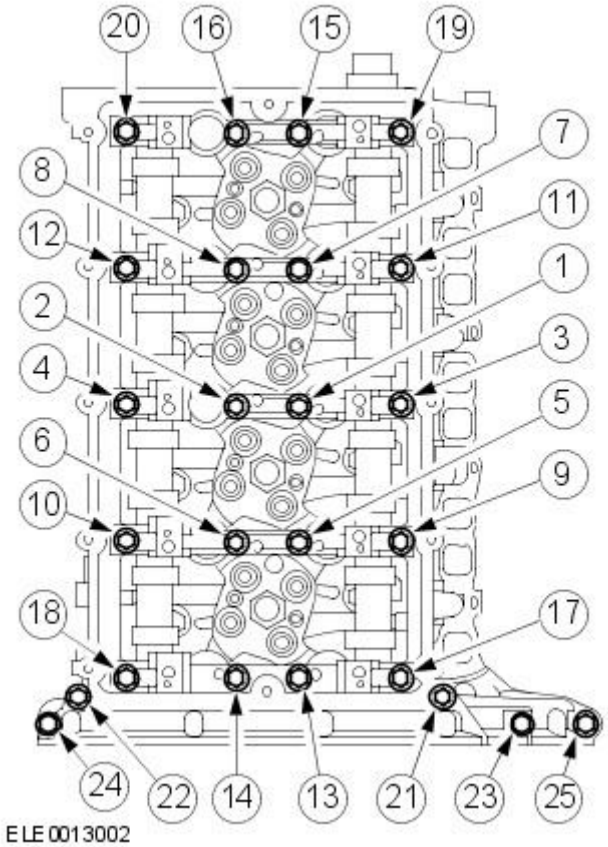

53. Using special tool 308-417, install a new camshaft rear seal.

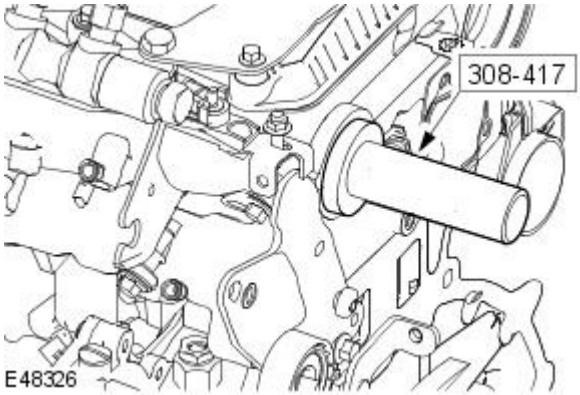

54. NOTE: Do not fully tighten at this stage.

Install the camshaft sprocket retaining bolts.

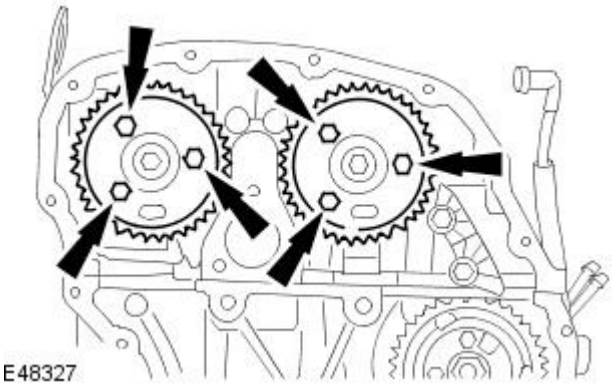

55. NOTE: Install new rocker shaft retaining bolts.

• NOTE: Lubricate the rocker shafts with clean engine oil.

• NOTE: The oil supply holes in the rocker shafts must point down.

• NOTE: Tighten the bolts in two stages.

Install the rocker shafts.

- Stage 1: 13 Nm.
- Stage 2: 45 degrees.

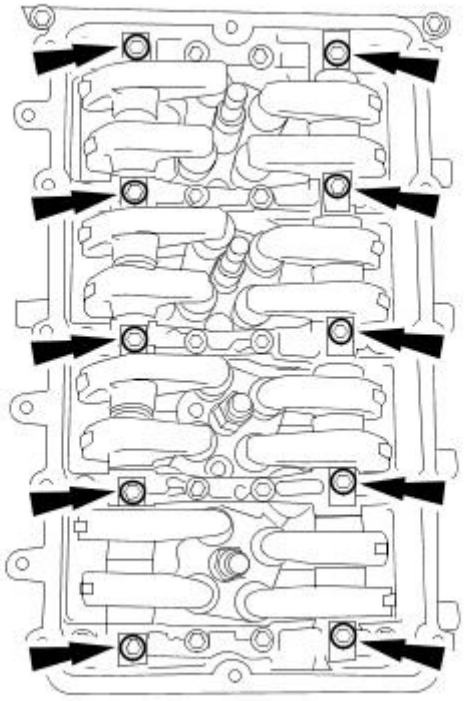

ELE0015429

56. Install the knock sensor (KS).

- Tighten to 20 Nm.

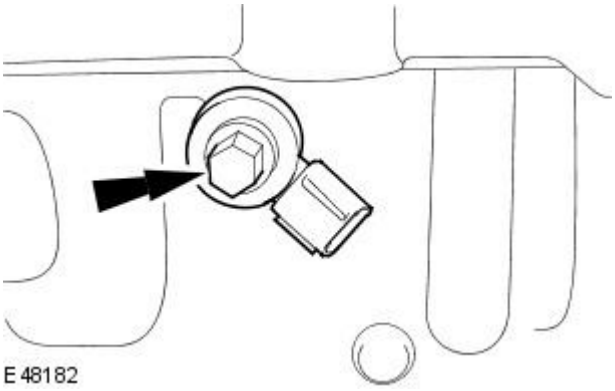

E48182

57. Install the high-pressure fuel pump.

1. Install the high-pressure fuel pump.
2. Tighten to 33 Nm..

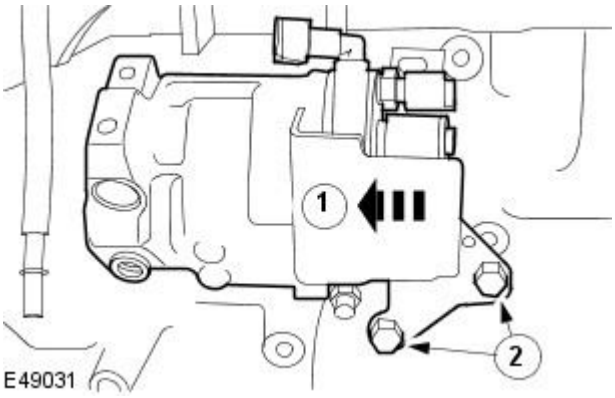

E49031

58. Install the timing chain oil feed pipe.

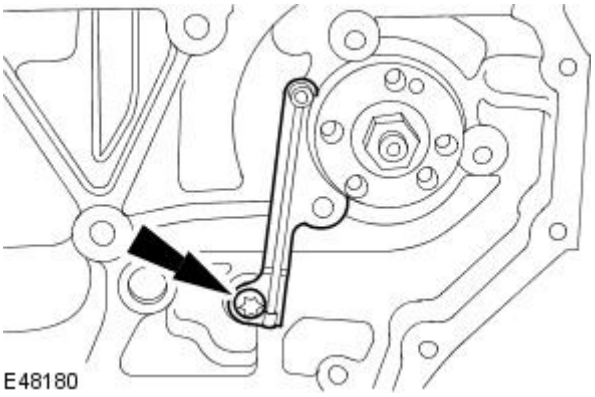

E48180

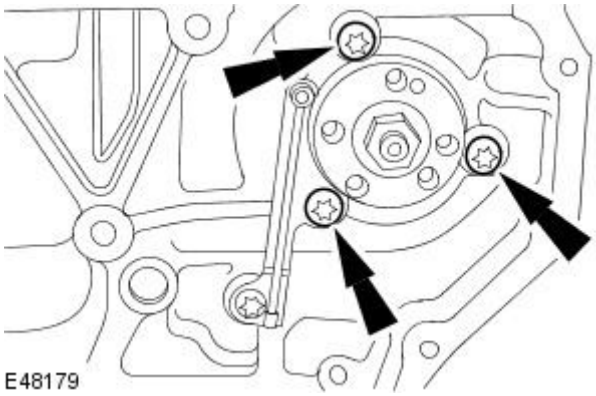

59. Install the high-pressure fuel pump retaining bolts.

- Tighten to 22 Nm.

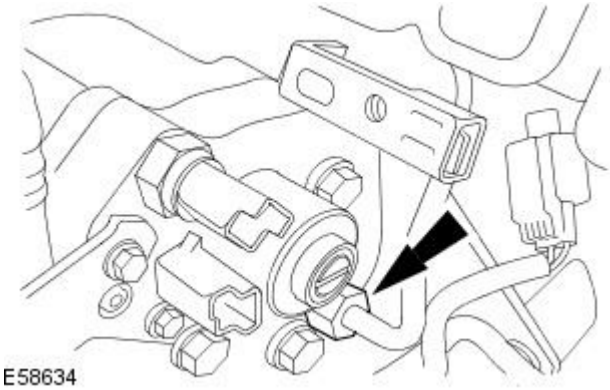

60. CAUTIONS:

Do not tighten the high-pressure fuel supply line union at this stage.

Maintain pressure on the high-pressure fuel supply line to keep the olive in contact with the fuel pump cone while hand installing the union. Failure to follow this instruction may result in foreign matter ingress to the fuel injection system.

Install a new high-pressure fuel supply line to the fuel pump.

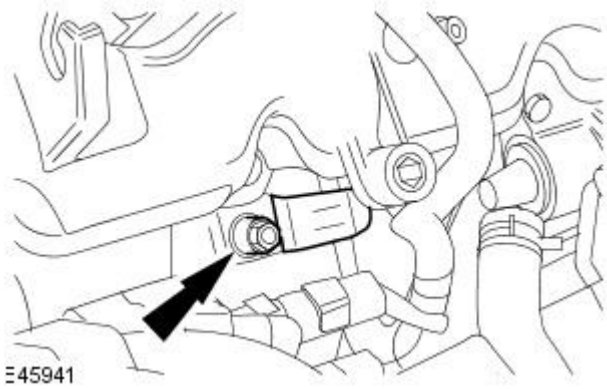

61. NOTE: Do not tighten the retaining nut at this stage.

Install the high-pressure fuel pump pipe retaining bracket.

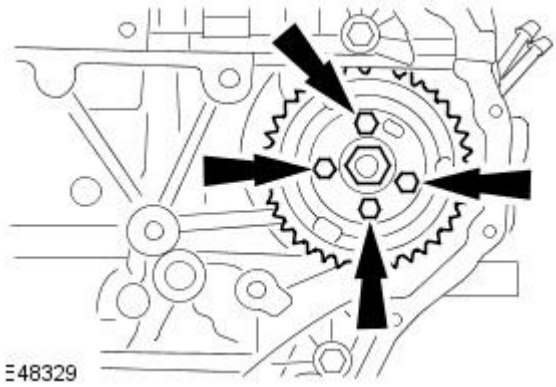

62. NOTE: Do not tighten the retaining bolts at this stage.

Install the fuel injection pump sprocket.

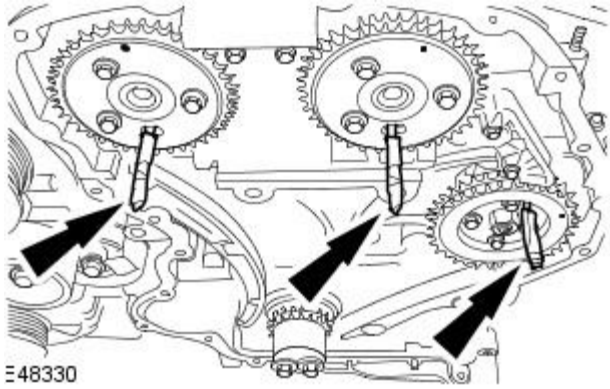

63. Using suitable 6 mm bar, lock the timing drive sprockets.

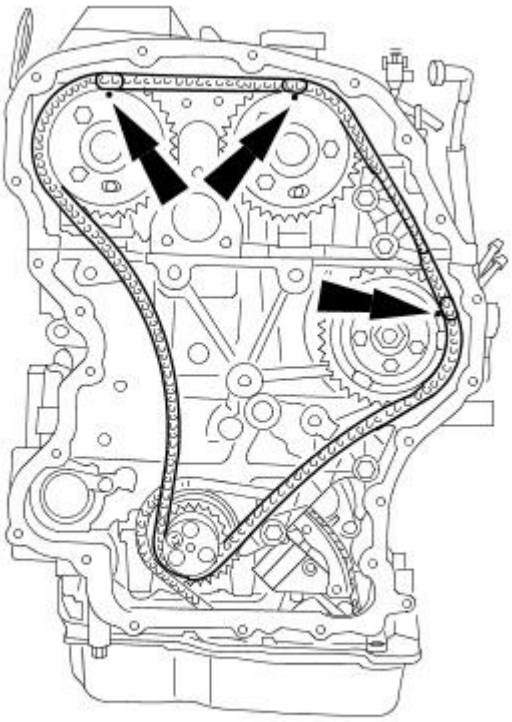

E46627

64. CAUTION: Make sure the colored links align to the timing marks. Failure to follow this instruction may result in damage to the vehicle.

Install the timing chain.

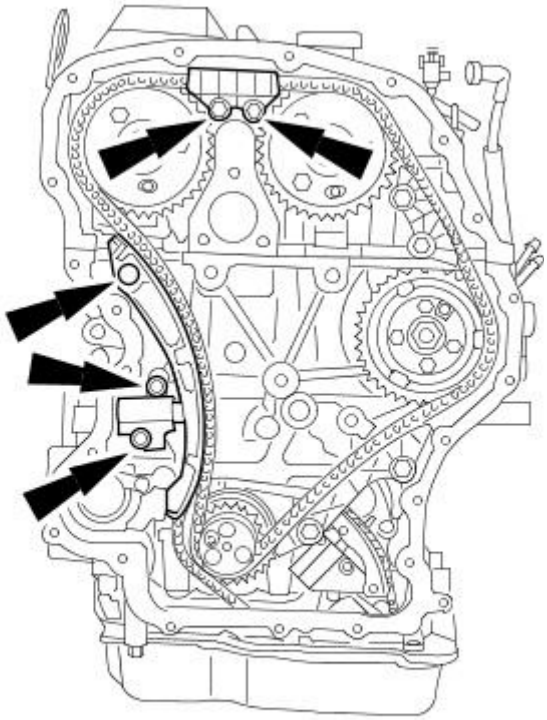

65. CAUTION: Make sure the timing chain tensioner is fully retracted before installation. Failure to follow this instruction may result in damage to the vehicle.

Install the timing chain tensioner and guides.

- Tighten to 14 Nm.

66. Unlock the timing chain tensioner.

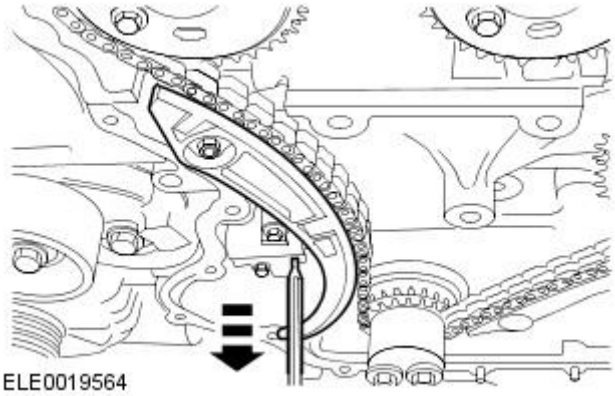

67. Tighten to 33 Nm.

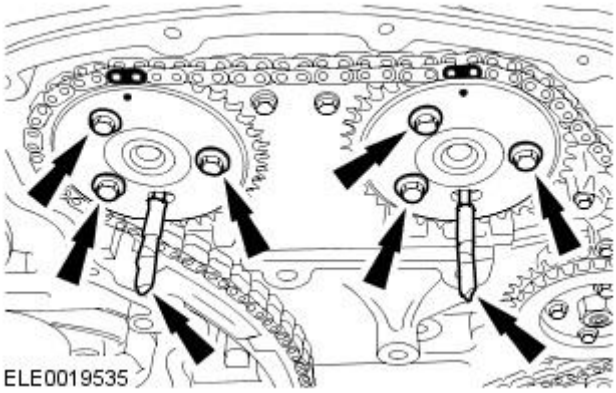

68. Tighten to 33 Nm.

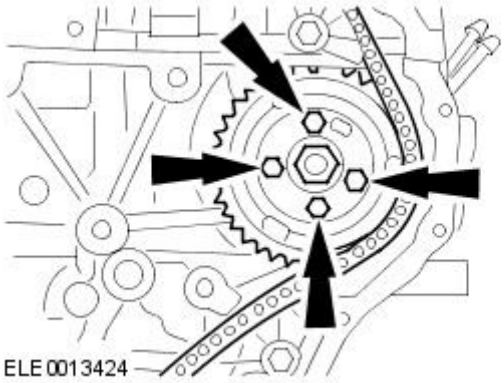

69. Remove the locking pins from the timing drive sprockets.

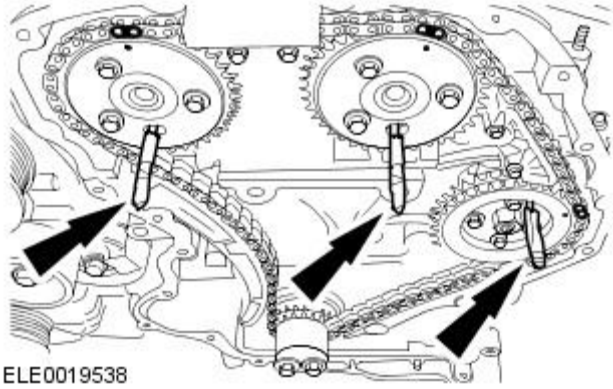

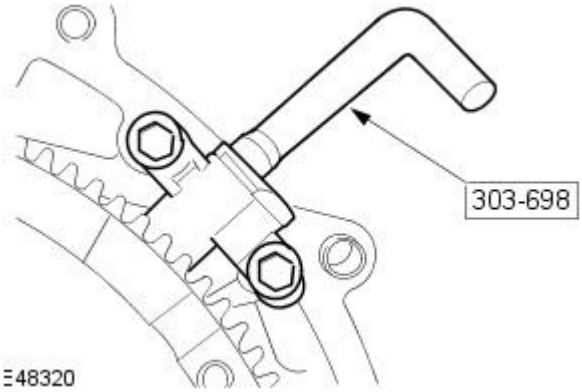

70. Remove the special tool 303-698.

71. Rotate the crankshaft two revolutions.

72. Using special tool 303-698, check the timing by inserting the special tool in the CKP sensor hole.

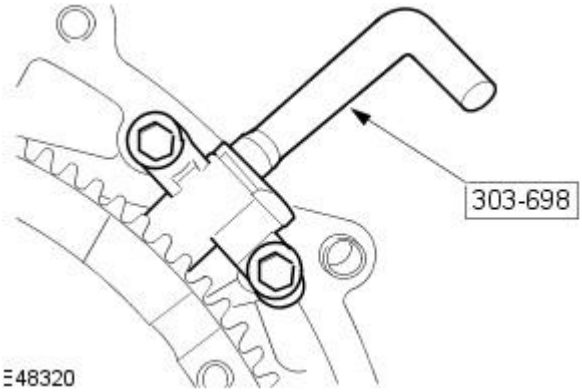

73. Check the camshaft timing by inserting a suitable 6 mm bar through the holes in the camshaft and fuel injection pump sprockets.

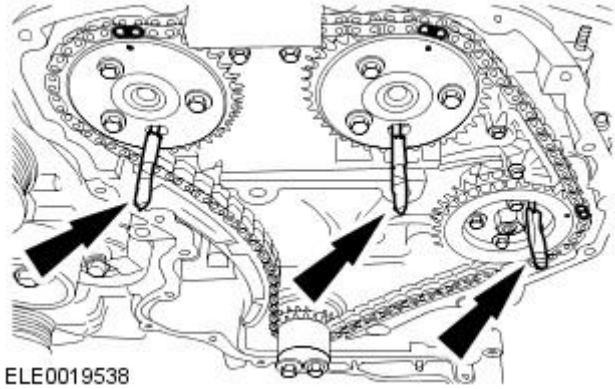

74. Remove the locking pins from the timing drive sprockets.

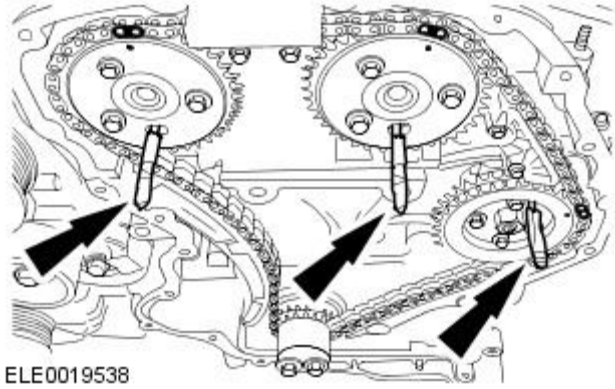

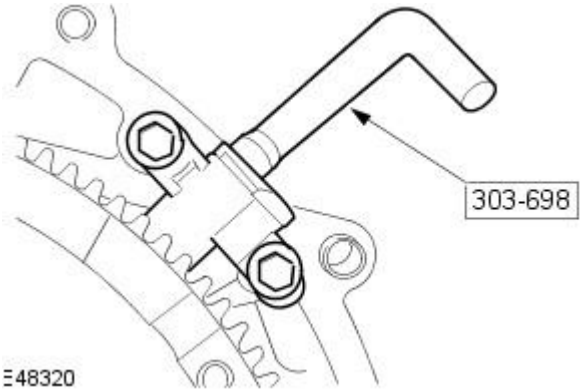

75. Remove the special tool.

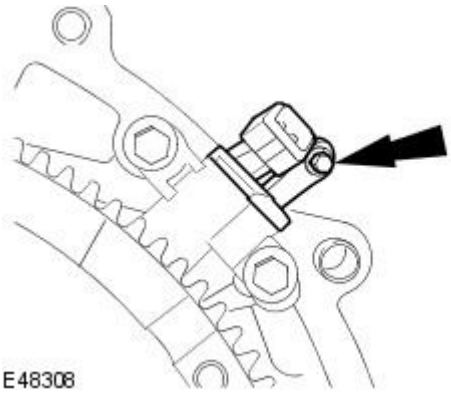

76. Install the CKP sensor.

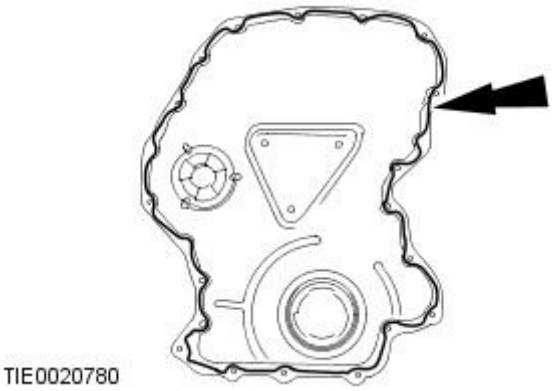

77. CAUTION: Install the engine front cover within five minutes of applying the sealer.

- NOTE: Install a new engine front cover.

  Apply a 3 mm diameter bead of sealer WSE-M4G323-A4 to the engine front cover.

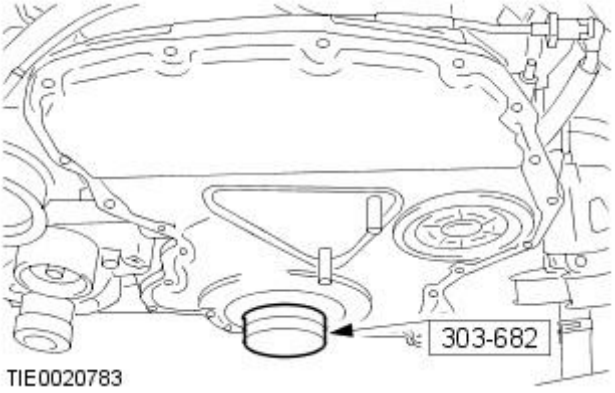

78. Using the special tool 303-682, install the engine front cover.

79. Install the front cover retaining nuts and bolts.

- Tighten the bolts to 14 Nm.
- Tighten the nuts to 10 Nm.

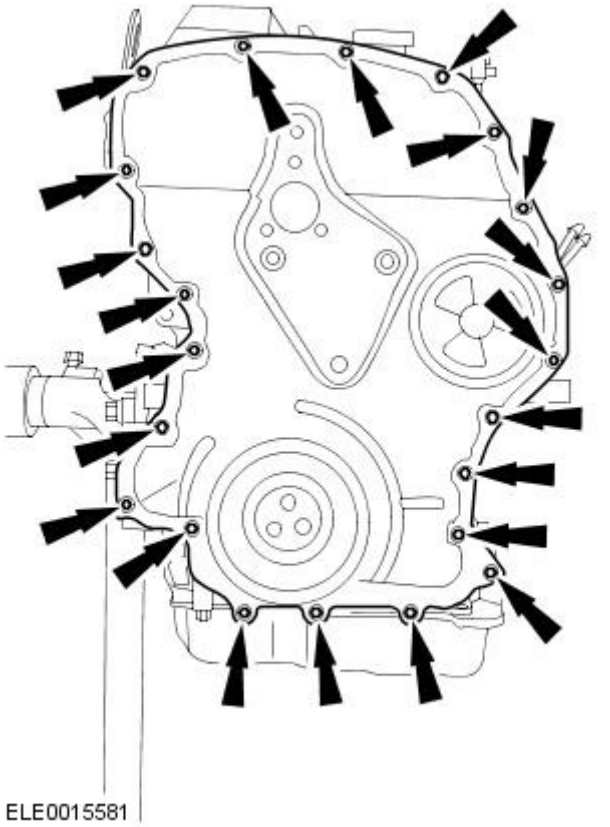

80. Remove special tool.

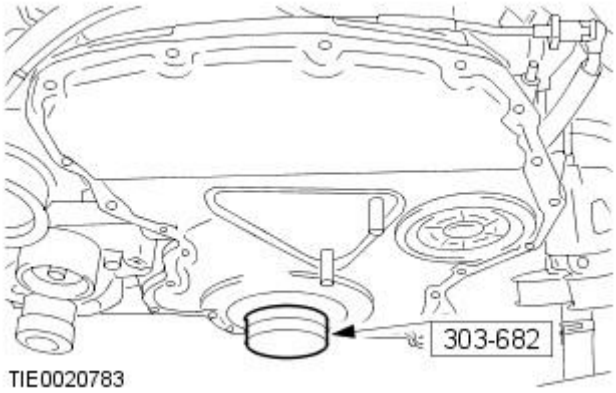

81. NOTE: Install a new crankshaft front oil seal.

• NOTE: A new crankshaft front oil seal is supplied with an alignment sleeve that will be pushed out during installation.

Using the special tool 303-679, install the crankshaft front seal.

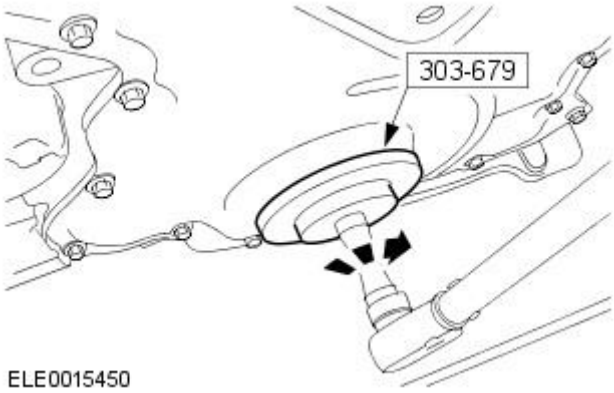

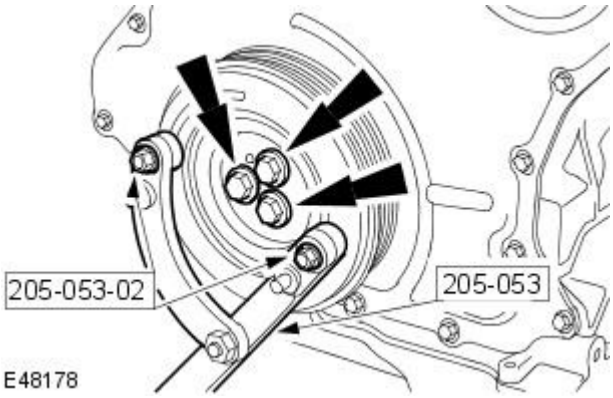

82. NOTE: New crankshaft pulley bolts must be installed.

Using the special tools 205-053 and 205-053-02, install the crankshaft damper.

- Stage 1: 45 Nm.
- Stage 2: 120 degrees.

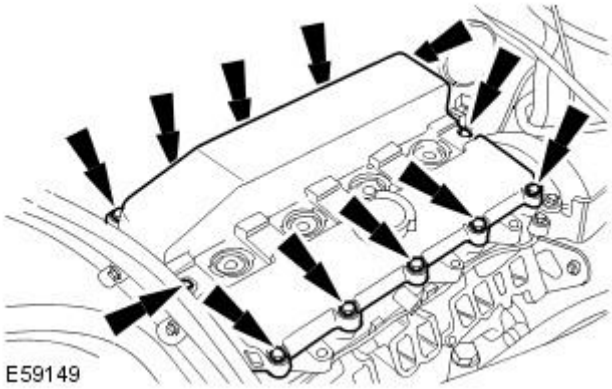

83. NOTE: Install a new valve cover gasket.

Install the valve cover.

- Tighten to 10 Nm.

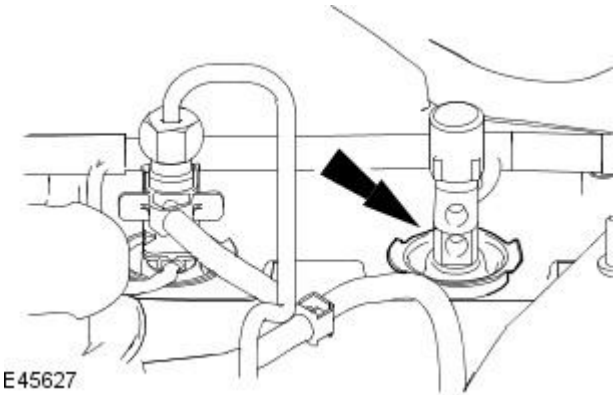

84. NOTE: One valve cover fuel injector seal shown, other valve cover fuel injector seals similar.

Install new valve cover fuel injector seals.

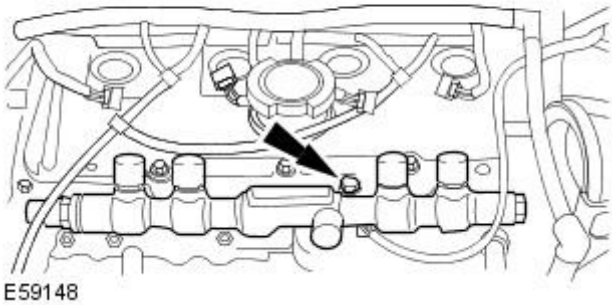

85. NOTE: Do not fully tighten the fuel injection supply manifold retaining bolt at this stage.

Install the fuel injection supply manifold.

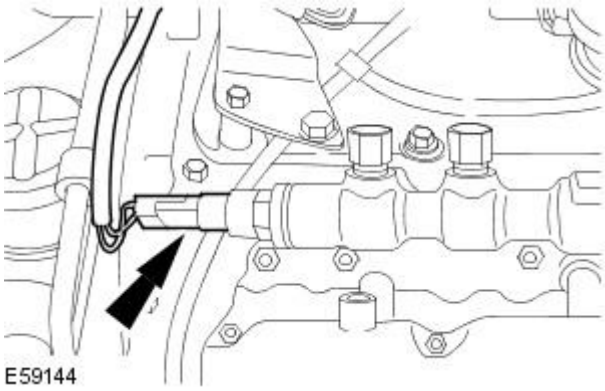

86. Connector the fuel pressure sensor electrical connector.

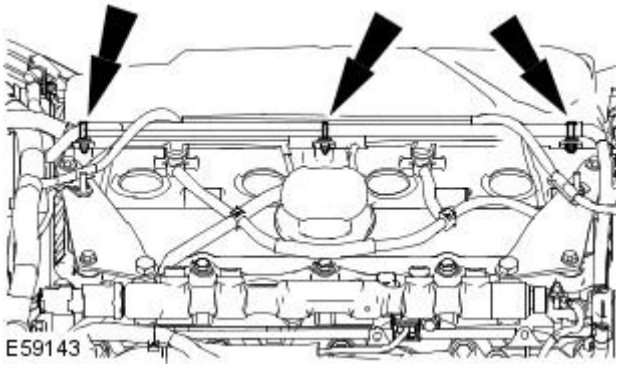

87. Attach the starter motor and injector wiring harness.

88. Install the sound proof padding.

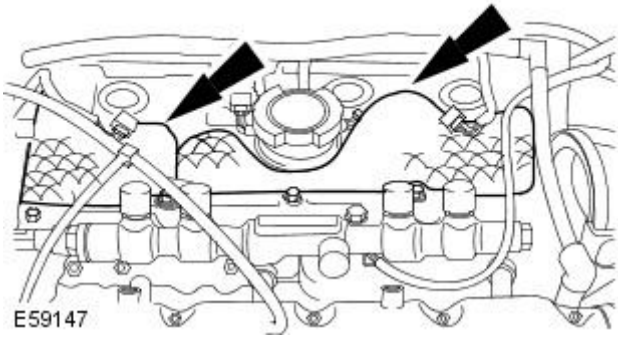

89. NOTE: Do not fully tighten the fuel injection supply manifold support bracket bolts at this stage.

Install the fuel injection supply manifold support brackets.

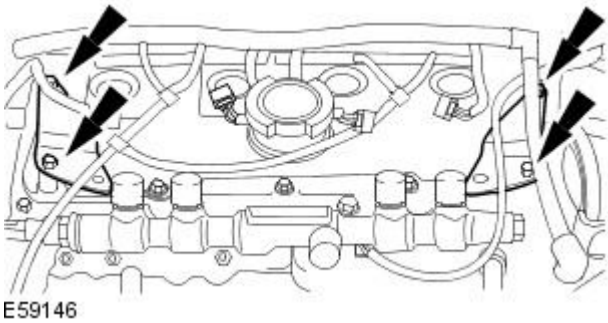

90. NOTE: Do not fully tighten the fuel injection supply manifold retaining bolts at this stage.

Install the fuel injection supply manifold retaining bolts.

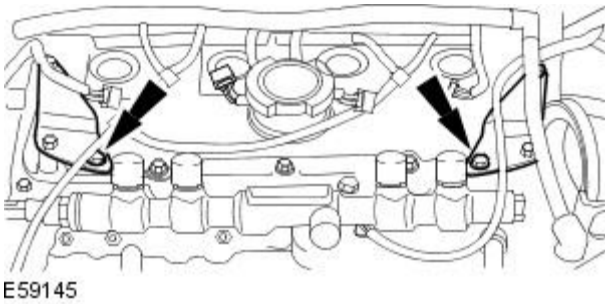

91. Using a suitable multipurpose lubricant spray, lubricate the new high-pressure fuel supply line union threads.

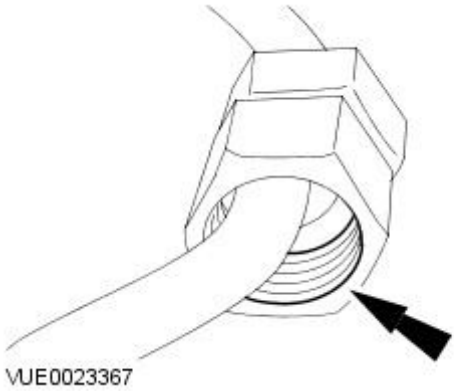

92. CAUTION: Do not allow the unions to hit the olive ends of the high pressure fuel supply line as this may damage the ends of the line and allow foreign matter to enter the fuel injection system.

• NOTE: The yellow colored collar is fitted at the fuel pump end and the

blue colored collar is fitted at the fuel injection supply manifold end of the high pressure fuel supply line.

• NOTE: To aid identification of the high pressure fuel supply lines, the union at the fuel pump end is etched with the word Pump.

Position the high-pressure fuel supply line as near to the final installation position as possible and then remove and discard the blanking plugs from the high-pressure fuel supply line.

93. Remove the blanking plugs from the fuel injection supply manifold threaded ports.

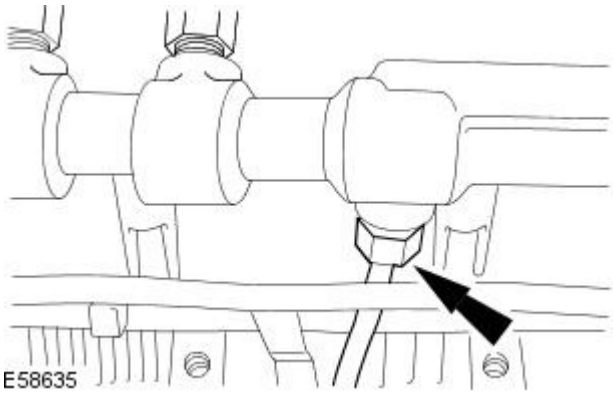

94. CAUTIONS:

Do not tighten the high-pressure fuel supply line union at this stage.

Maintain pressure on the high-pressure fuel supply line to keep the olive in contact with the fuel injection supply manifold cone while hand installing the union. Failure to follow this instruction may result in foreign matter ingress to the fuel injection system.

Attach the high-pressure fuel supply line to the fuel injection supply manifold.

95. Using a suitable multipurpose lubricant spray, lubricate the new high-pressure fuel supply line union threads.

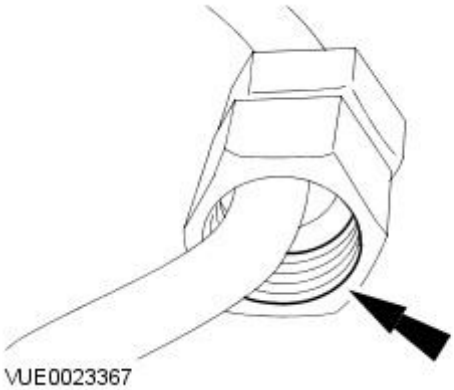

96. CAUTION: Do not allow the unions to hit the olive ends of the high-pressure fuel supply line as this may damage the ends of the line and allow foreign matter to enter the fuel injection system.

• NOTE: The yellow colored collar is fitted at the fuel injector end and the blue colored collar is fitted at the fuel supply manifold end of the high-pressure fuel supply line.

• NOTE: To aid identification of the high-pressure fuel supply line, the union at the fuel injector end is etched with the cylinder number.

Position the high-pressure fuel supply line as near to the final installation position as possible and then remove and discard the blanking plugs from the high-pressure fuel supply line.

97. Remove the blanking plugs from the fuel injector and the fuel injection supply manifold threaded ports.

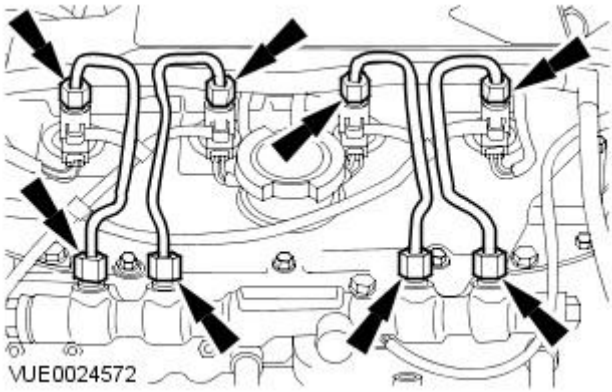

98. CAUTION: Maintain pressure on the high-pressure fuel supply line to keep the olives in contact with the fuel injectors and the fuel injection supply manifold cones while hand installing the unions.

• NOTE: Install the high-pressure fuel supply lines to the fuel injection supply manifold end first followed by the fuel injector end.

• NOTE: Do not tighten the high-pressure fuel supply line unions at this stage.

Install new high-pressure fuel supply lines.

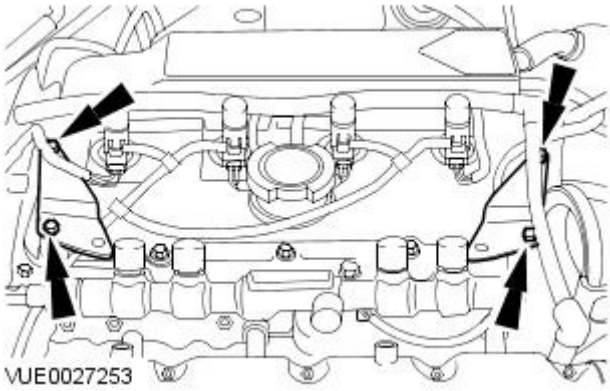

99. NOTE: High-pressure fuel supply lines shown removed for clarity.

Tighten the fuel injection supply manifold support brackets.

- Tighten to 14 Nm.

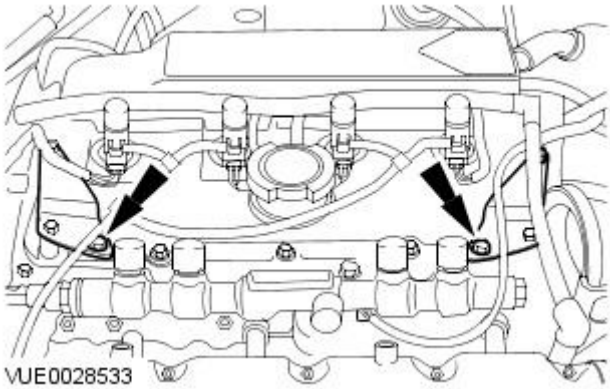

100. NOTE: High-pressure fuel supply lines shown removed for clarity.

Tighten the fuel injection supply manifold retaining bolts.

- Tighten to 23 Nm.

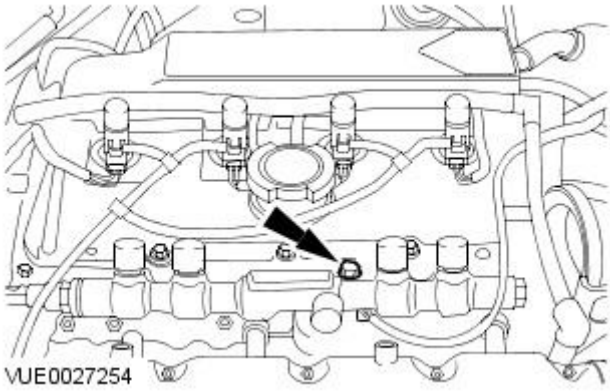

101. NOTE: High-pressure fuel supply lines shown removed for clarity.

Tighten the fuel injection supply manifold retaining bolt.

- Tighten to 23 Nm.

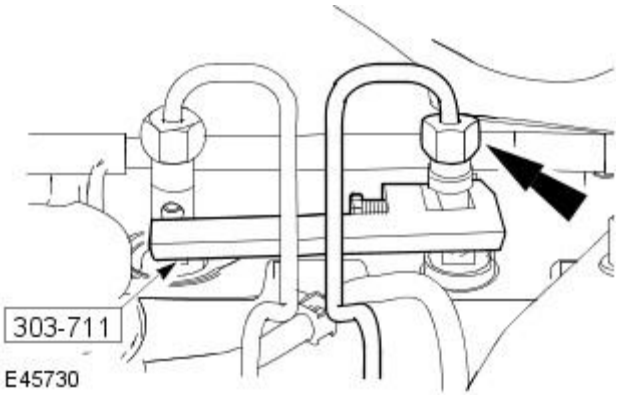

102. CAUTIONS:

Make sure the special tool is clamped around the fuel injector which is being tightened and is resting up against the adjacent fuel injector.

Make sure the tool used to tighten the high-pressure fuel supply line unions is used at the top of the union as this is where there is most material. Failure to follow this instruction may result in damage to the union.

Make sure that the fuel injector does not move when tightening the high-pressure fuel supply lines. Failure to follow this instruction will result in damage to the fuel injector and the fuel injector sealing washer.

Install the special tool and tighten the high pressure fuel supply line union at the fuel injector.

- Tighten to 40 Nm.

103. Remove the special tool.

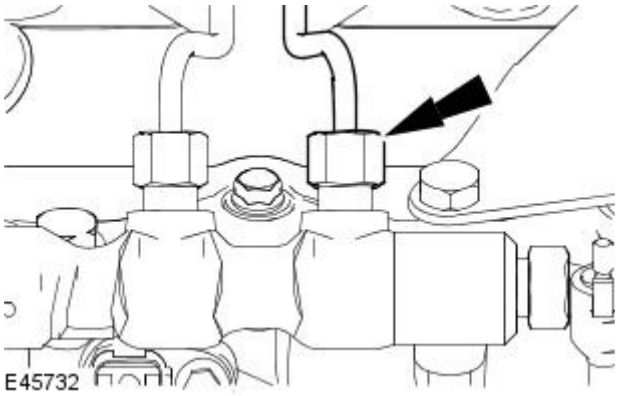

104. CAUTION: Make sure the tool used to tighten the high-pressure fuel supply line unions is used at the top of the union as this is where there is most material. Failure to follow this instruction may result in damage to the union.

Tighten the high-pressure fuel supply line union at the fuel injection supply manifold.

- Tighten to 40 Nm.

105. Repeat steps 97, 98 and 99 for tightening the three remaining high-pressure fuel supply line unions.

106. NOTE: Cylinders three and four fuel injectors shown, cylinders one and two fuel injectors similar.

• NOTE: Install new O-ring seals.

Install the wiring harness.

- Connect the fuel injector electrical connectors.

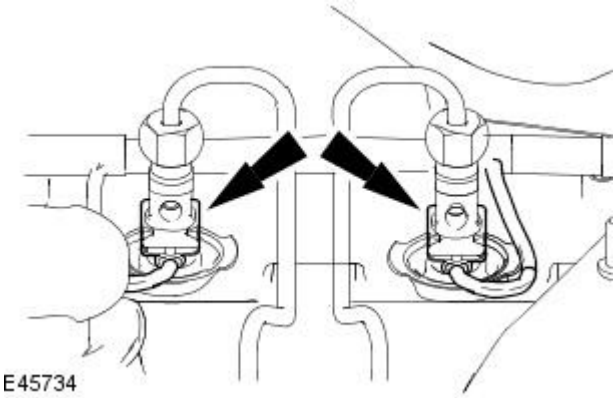

107. NOTE: Cylinders three and four fuel injectors shown, cylinders one and two fuel injectors similar.

• NOTE: Install new O-ring seals.

Connect the fuel return lines to the fuel injectors.

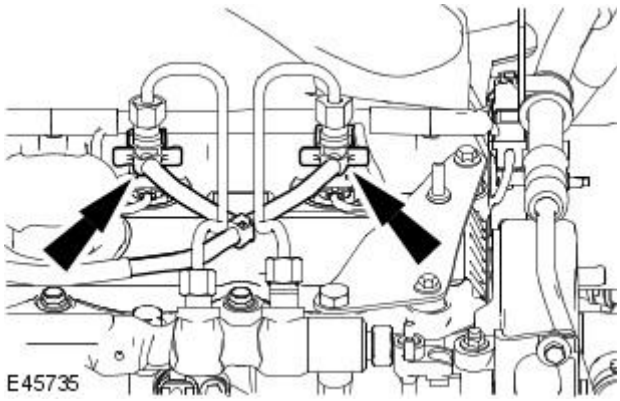

108. Tighten the high pressure fuel supply line union at the fuel injection supply manifold.

- Tighten to 40 Nm.

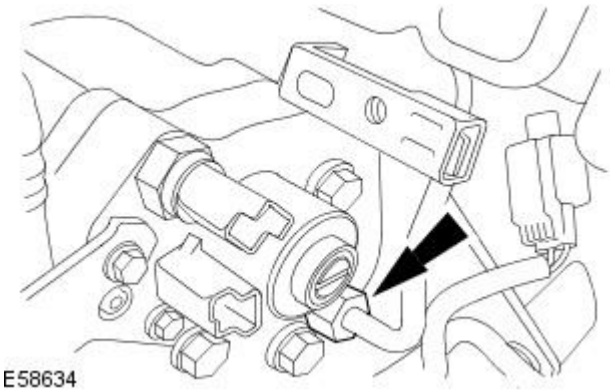

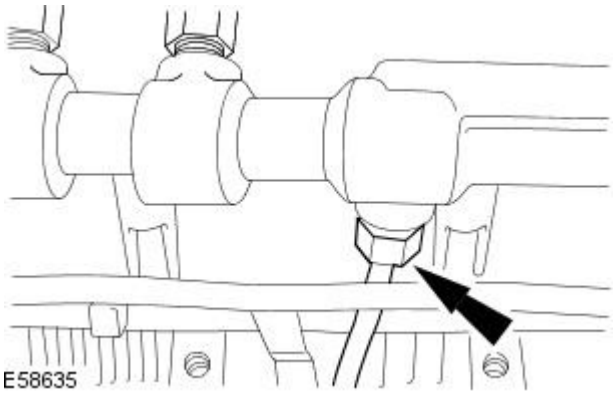

109. CAUTION: Make sure the tool used to tighten the high pressure fuel supply line union is used at the top of the union as this is where there is most material. Failure to follow this instruction may result in damage to the union.

Tighten the high pressure fuel supply line union at the fuel injection supply manifold.

- Tighten to 40 Nm.

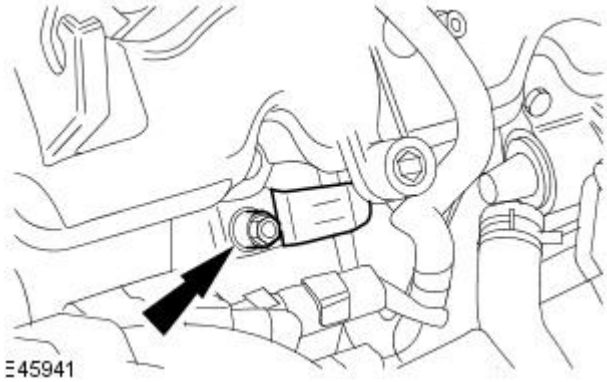

110. Tighten to 8 Nm.

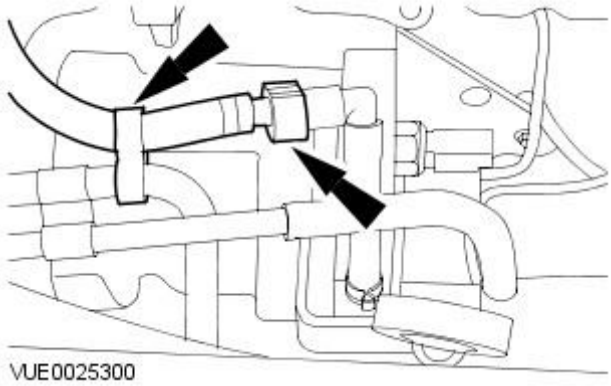

111. NOTE: Remove the blanking plugs from the fuel injector to fuel pump fuel return line male and female connectors.

Connect the fuel injector to fuel pump fuel return line and attach the line to the retaining clip.

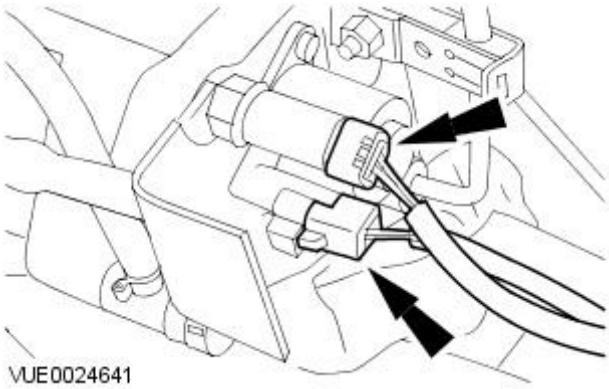

112. Connect the fuel metering valve and fuel temperature sensor electrical connectors.

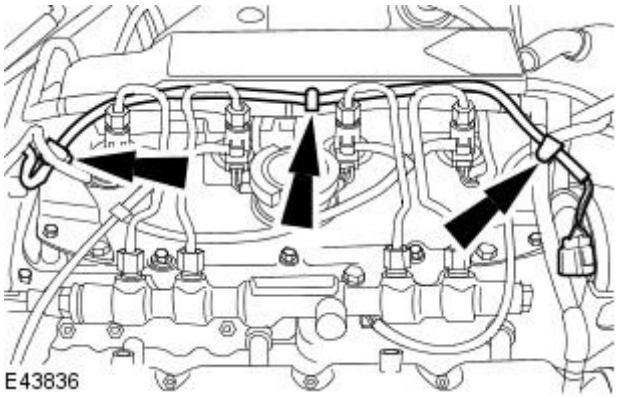

113. Attach the mass air flow (MAF) sensor wiring harness.

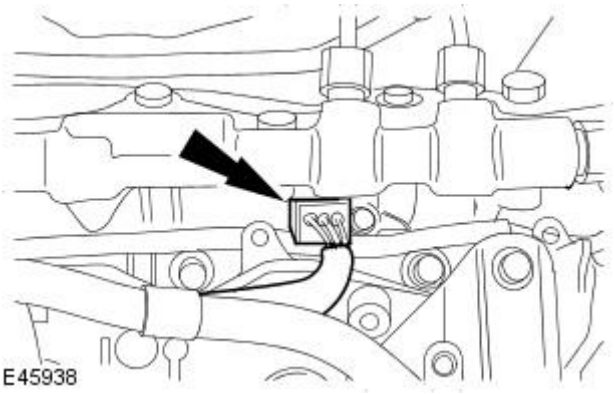

114. Connect the camshaft position (CMP) sensor electrical connector.

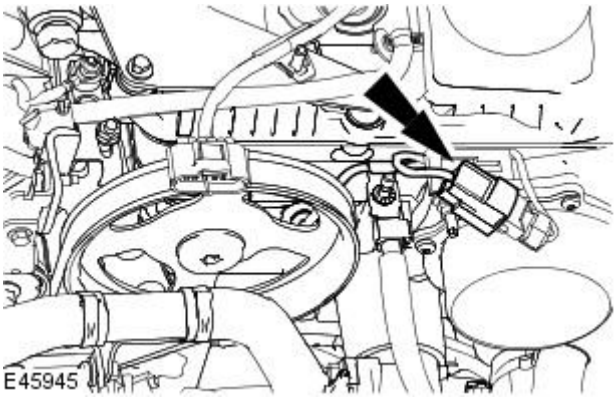

115. Connect the cylinder head temperature (CHT) sensor electrical connector.

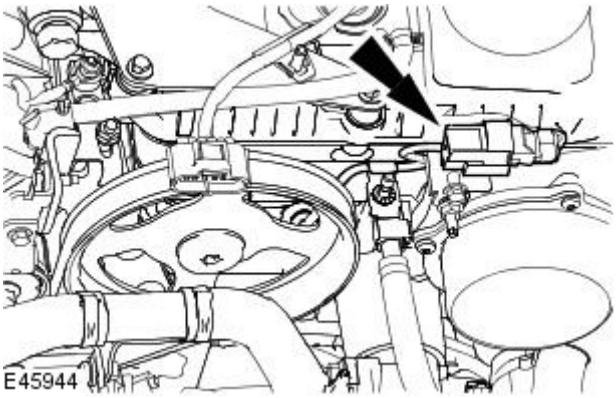

116. Attach the CHT sensor electrical connector.

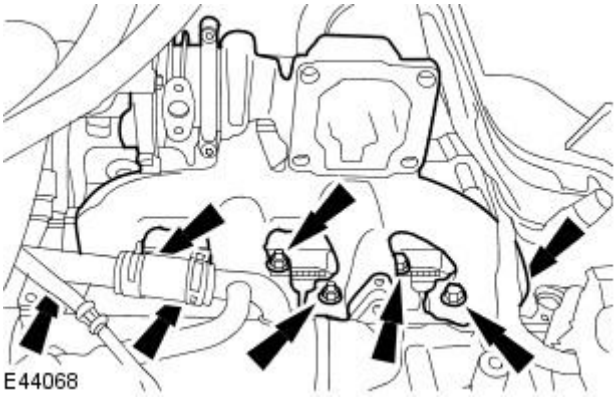

117. Install the exhaust manifold.

- Tighten to 40 Nm.

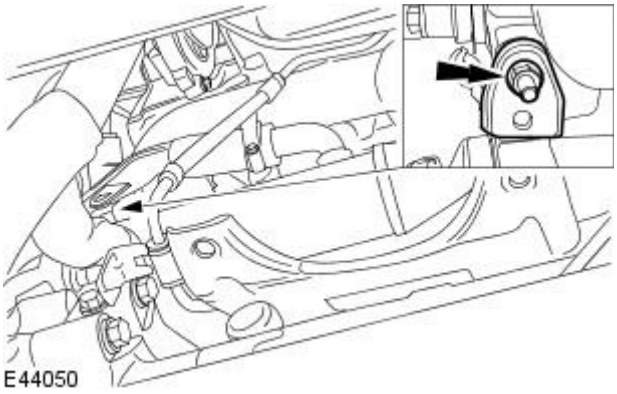

118. Install the exhaust gas recirculation (EGR) cooler mount bracket.

- Tighten to 10 Nm.

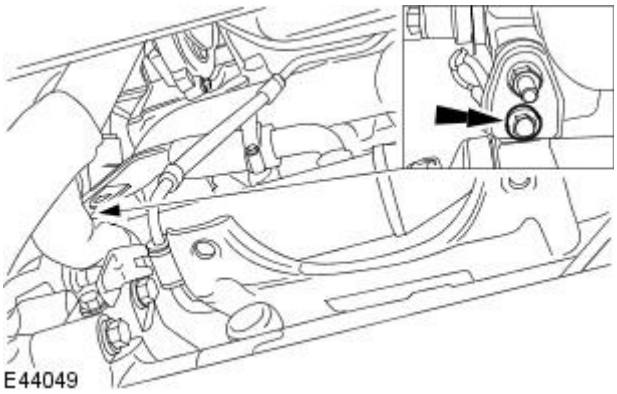

119. Install the EGR cooler mount bracket retaining bolt.

- Tighten to 10 Nm.

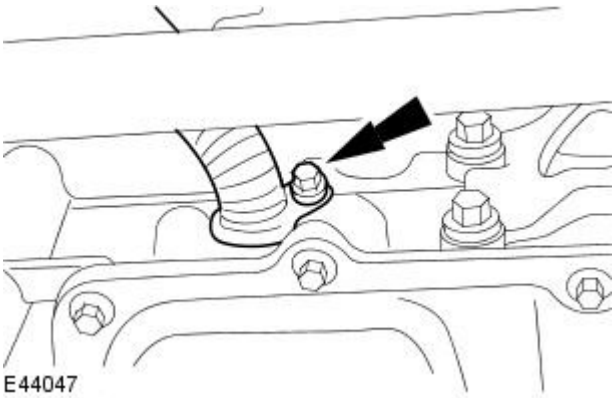

120. NOTE: Install a new O-ring seal.

Install the oil return tube.

- Tighten to 10 Nm.

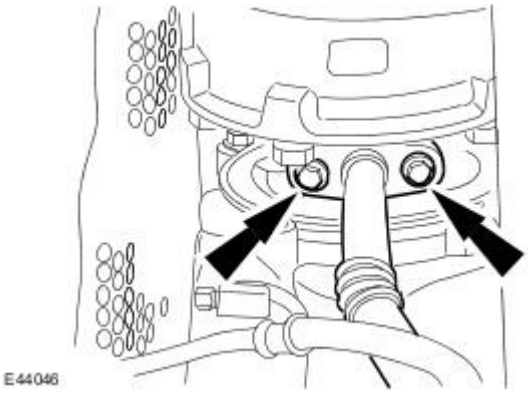

121. NOTE: Install a new gasket.

Connect the oil return tube to the turbocharger.

- Tighten to 10 Nm.

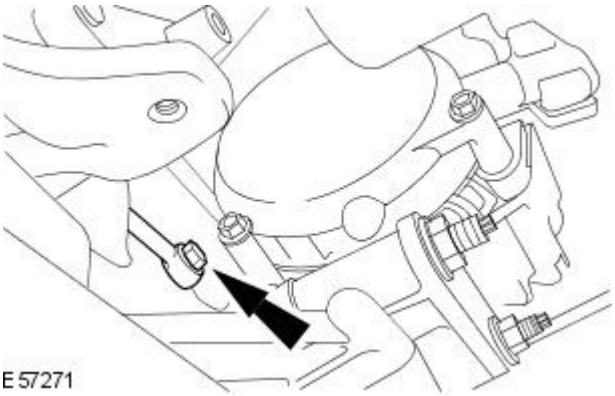

122. Install the oil supply tube.

- Tighten to 14 Nm.

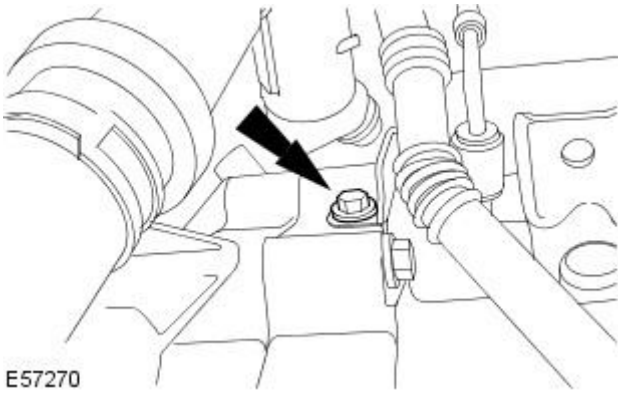

123. Attach the oil supply tube.

- Tighten to 23 Nm.

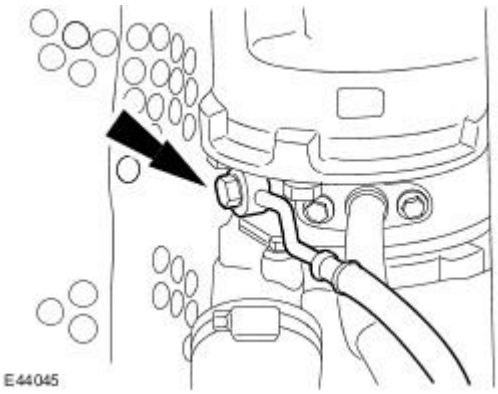

124. NOTE: Install new sealing washers.

Connect the oil supply tube to the turbocharger.

- Tighten to 14 Nm.

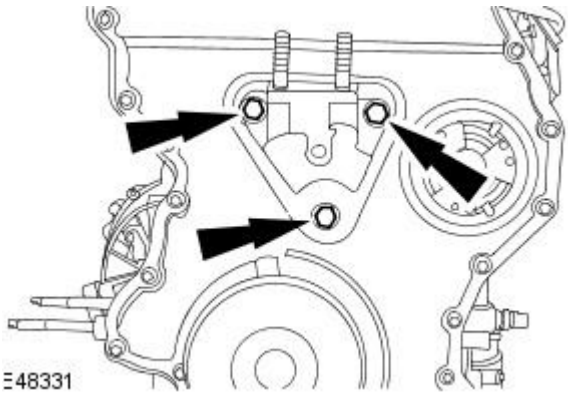

125. Install the engine front mount bracket.

- Tighten to 80 Nm.

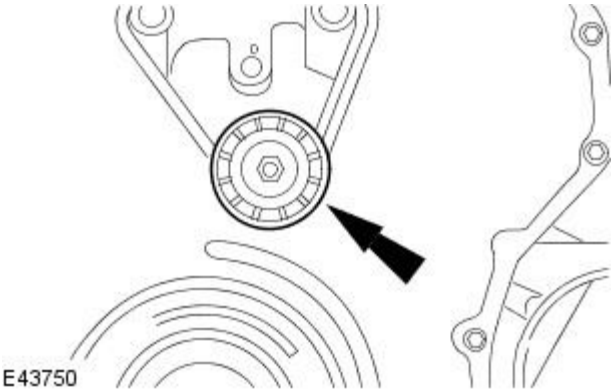

126. Install the idler pulley.

- Tighten to 43 Nm.

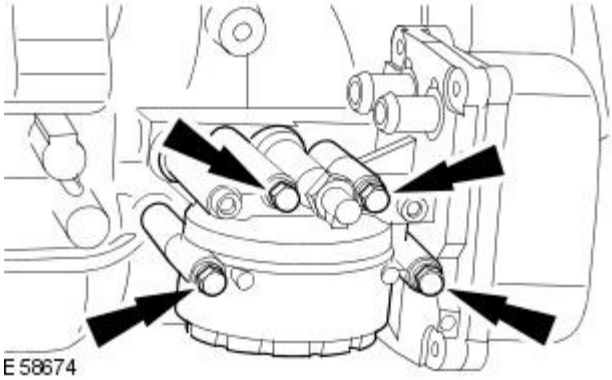

127. NOTE: Install new O-ring seals.

Install the oil filter housing.

- Tighten to 22 Nm.

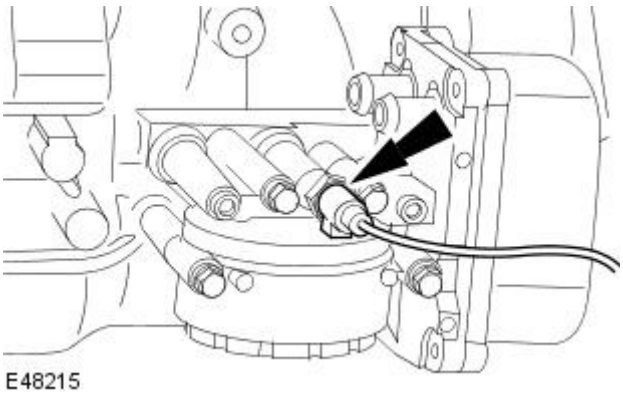

128. Connect the oil pressure switch electrical connector.

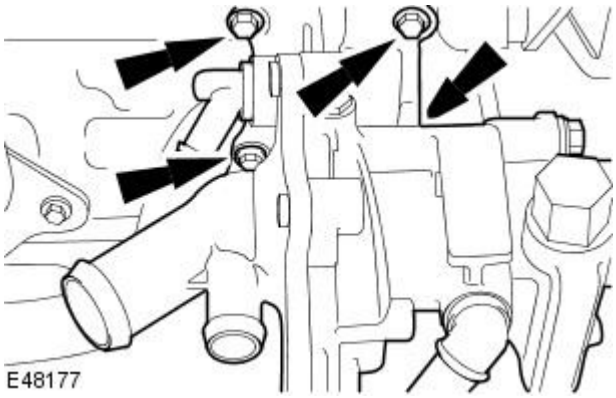

129. NOTE: Install a new water pump gasket.

Install the water pump and power assisted steering pump assembly.

- Tighten to 22 Nm.

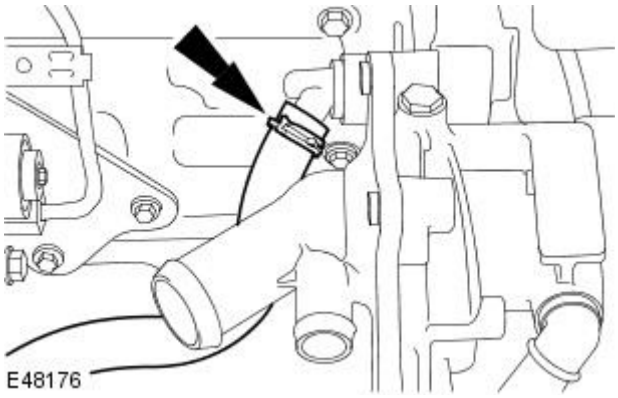

130. Connect the coolant hose to the water pump.

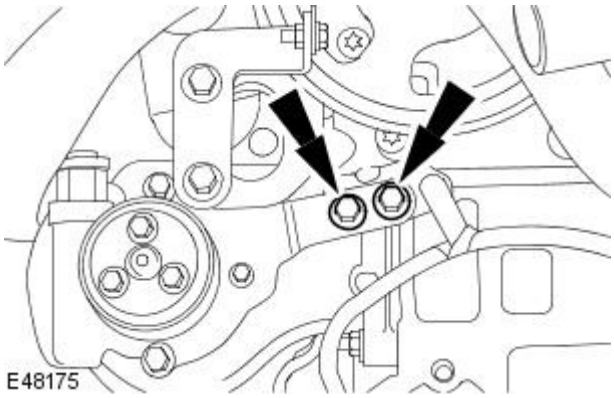

131. Install the power assisted steering pump bracket retaining bolts.

- Tighten to 22 Nm.

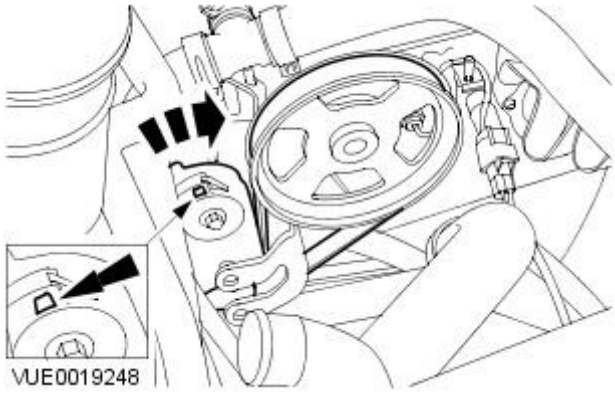

132. Install the power assisted steering pump belt.

- Rotate the tensioner clockwise.

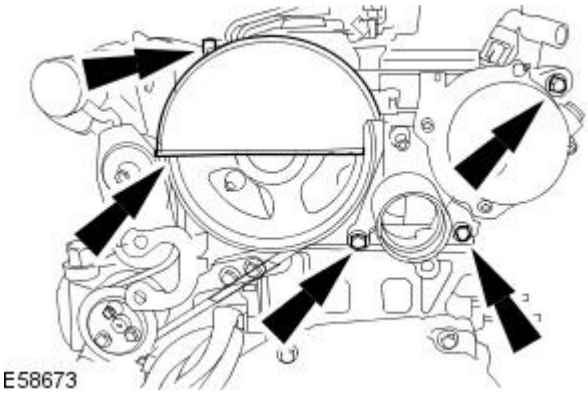

133. Install the brake vacuum pump retaining bolts.

- Tighten to 10 Nm.

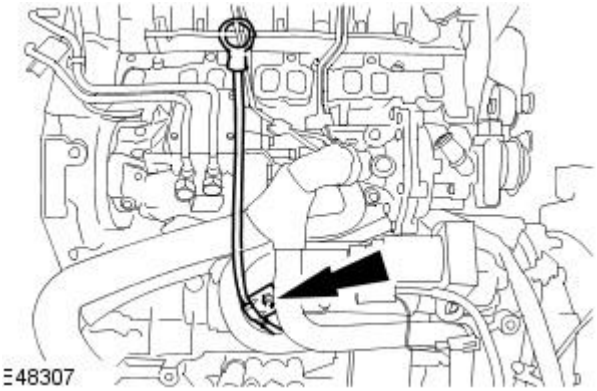

134. Install the oil level indicator and tube.

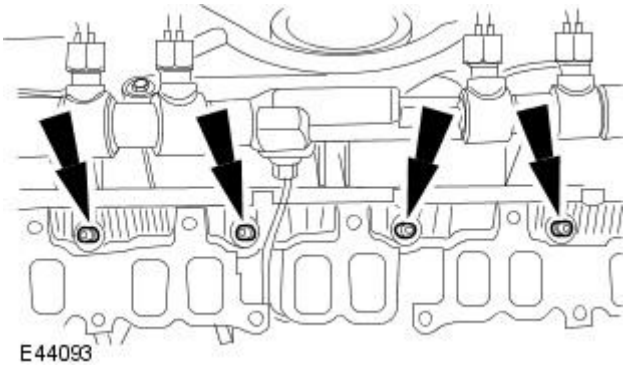

135. Install the glow plugs.

- Tighten to 13 Nm.

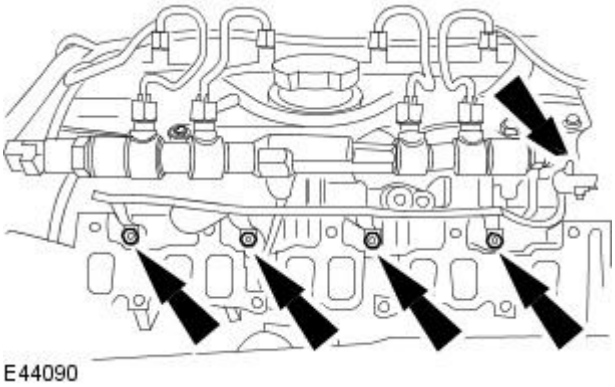

136. Install the glow plug wire.

- Tighten to 2 Nm.

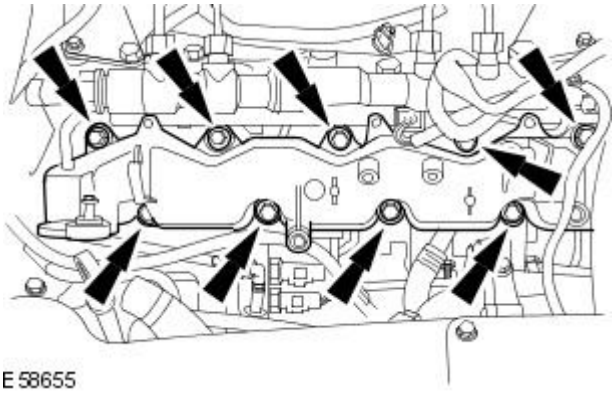

137. NOTE: Install new manifold gaskets.

Install the intake manifold.

- Tighten to 15 Nm.

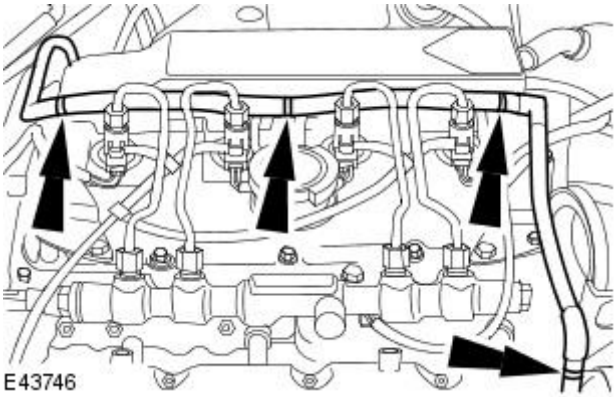

138. Install the starter motor to generator wiring harness.

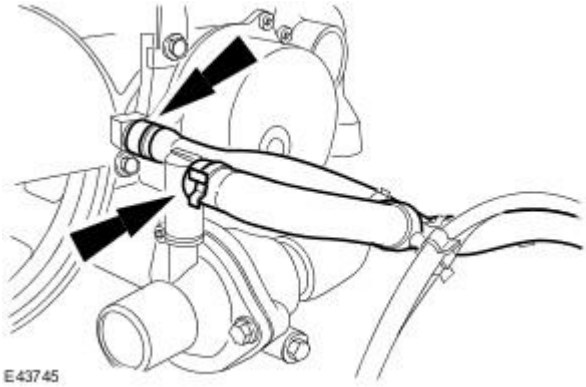

139. Install the coolant hoses.

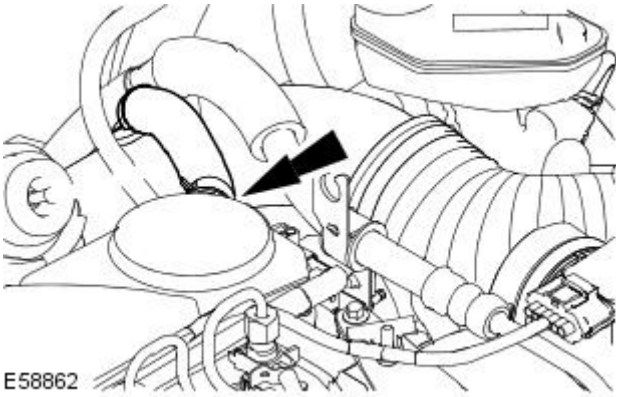

140. Install the air filter outlet tube.

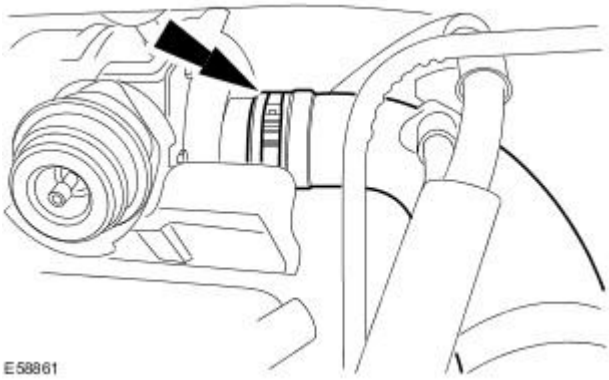

141. NOTE: Install a new air filter outlet tube retaining clip.

Install the air filter outlet tube.

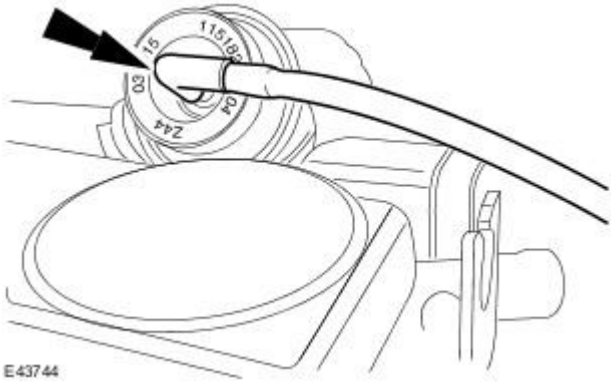

142. Connect the turbocharger vacuum hose.

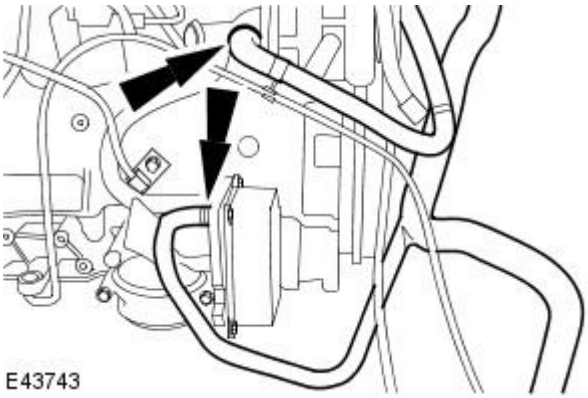

143. Connect the coolant hoses.

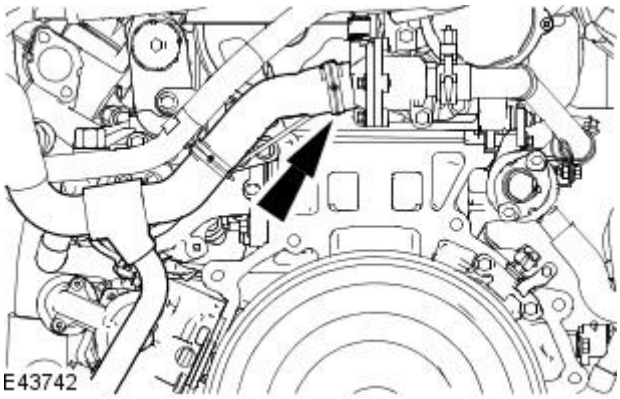

144. Connect the coolant hose.

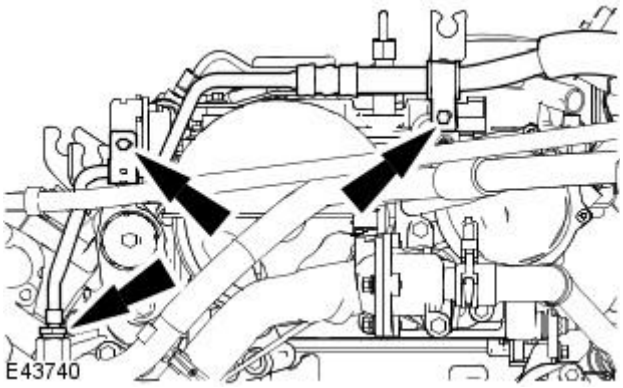

145. NOTE: Install a new power assisted steering high-pressure O-ring seal.

Install the power assisted steering high pressure pipe.

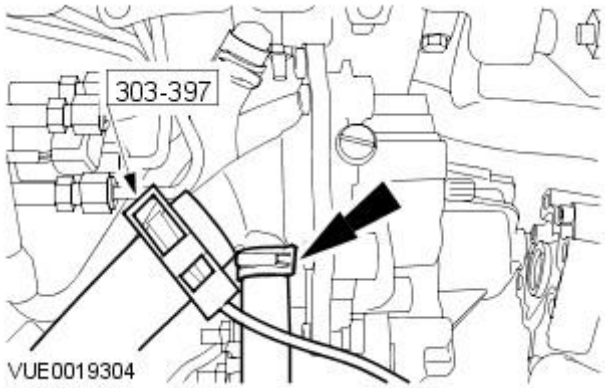

146. Using the special tool, install the water pump hoses.

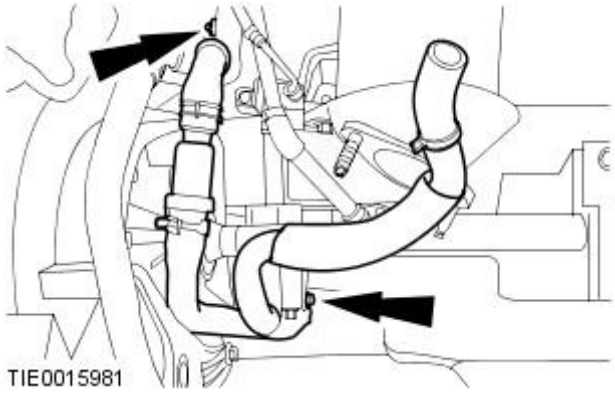

147. Install the EGR cooler coolant hose.

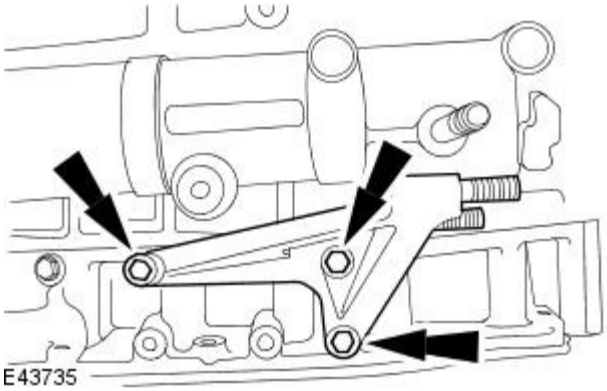

148. Install the halfshaft bracket.

- Tighten to 25 Nm.

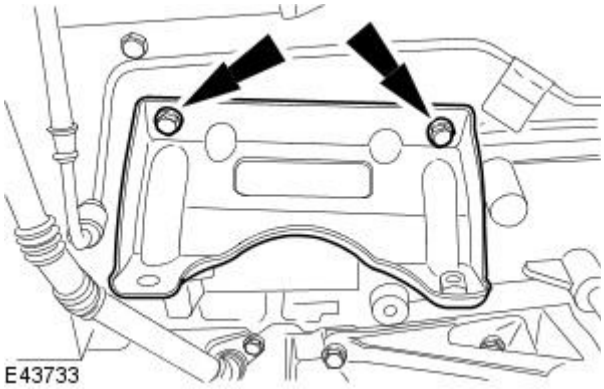

149. Install the catalytic converter bracket.

- Tighten to 46 Nm.

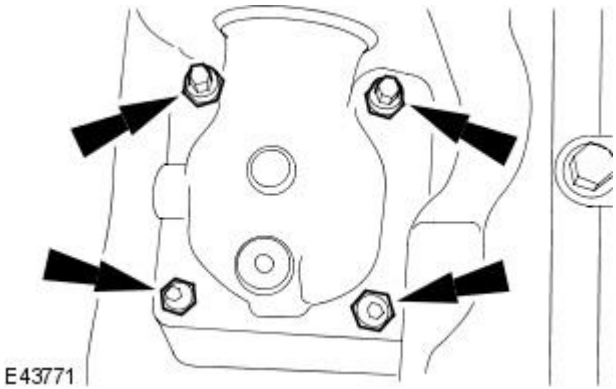

150. NOTE: Install new retaining nuts.

Install the catalytic converter.

- Tighten to 46 Nm.

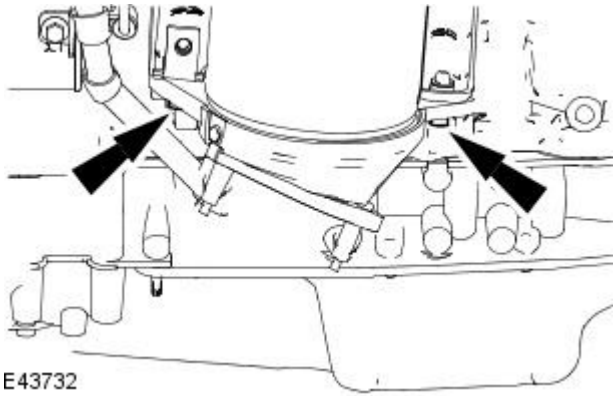

151. Install the catalytic converter retaining bolts.

- Install the catalytic converter securing bracket.
- Tighten to 46 Nm.

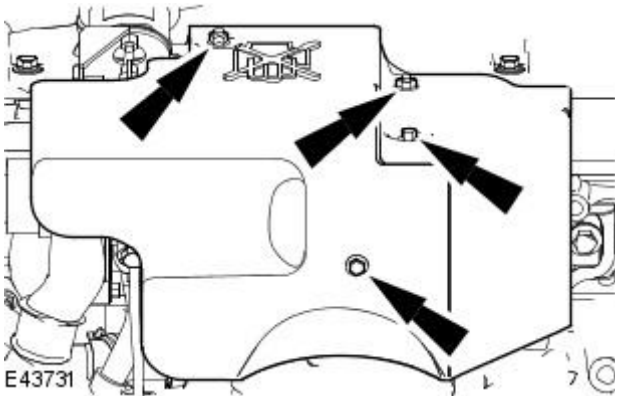

152. Install the turbocharger heat shield.

- Tighten to 8 Nm.

Vehicles with 2.2L diesel engine

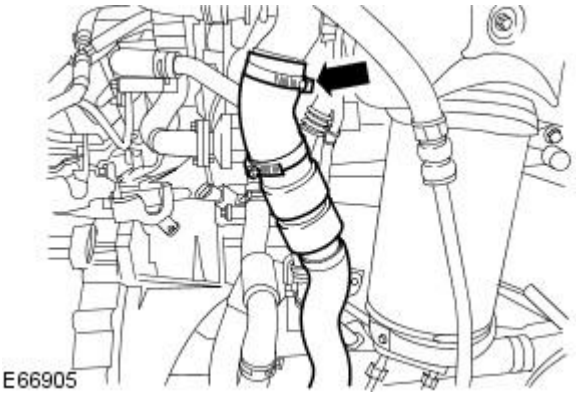

153. NOTE: Do not tighten the retaining clip.

Align the turbo outlet pipe and charge air cooler intake pipe assembly.

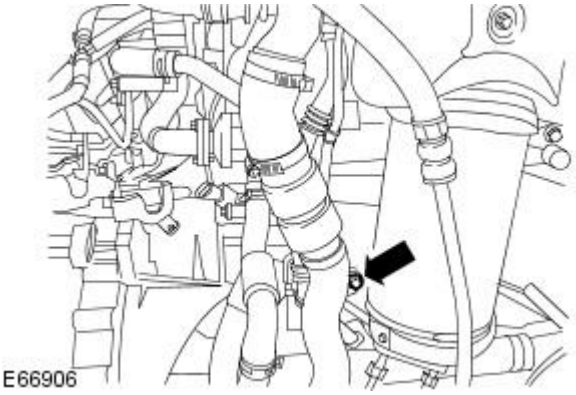

154. Install the turbo outlet pipe retaining bolt.

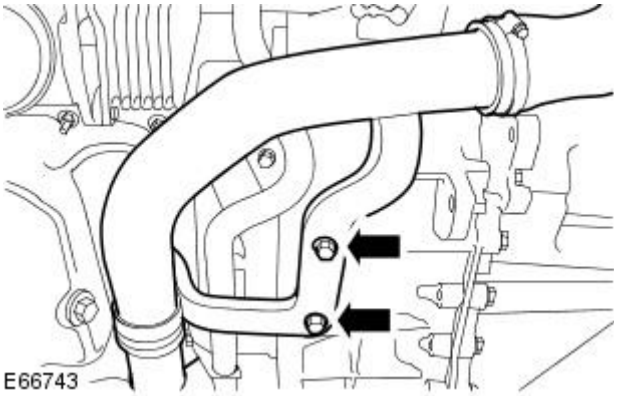

155. Install the charge air cooler intake pipe retaining bolts.

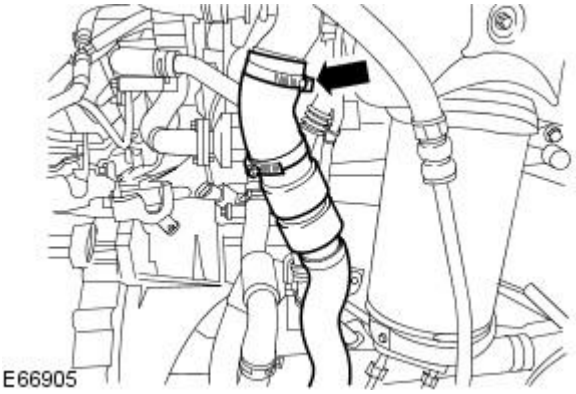

156. Tighten the retaining clip.

- Tighten to 4 Nm.

All vehicles

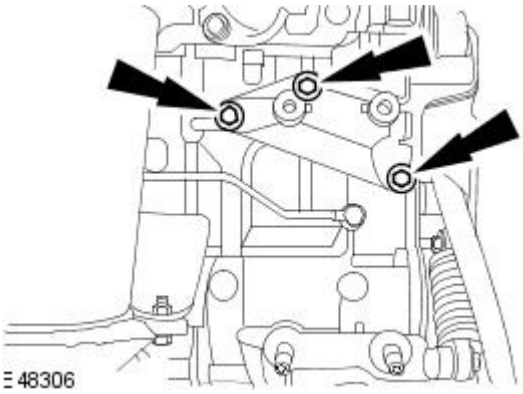

157. Install the accessory drive belt tensioner bracket.

- Tighten to 25 Nm.

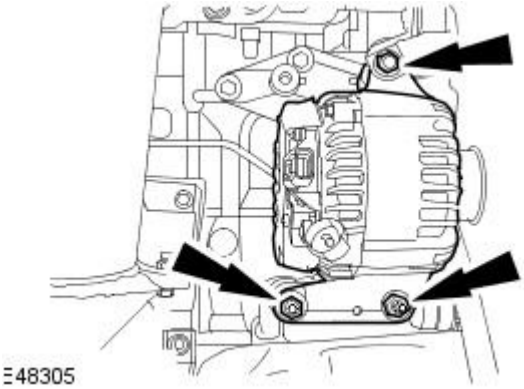

158. NOTE: Install the wiring harness support bracket to the generator upper retaining bolt.

Install the generator.

- Tighten to 47 Nm.

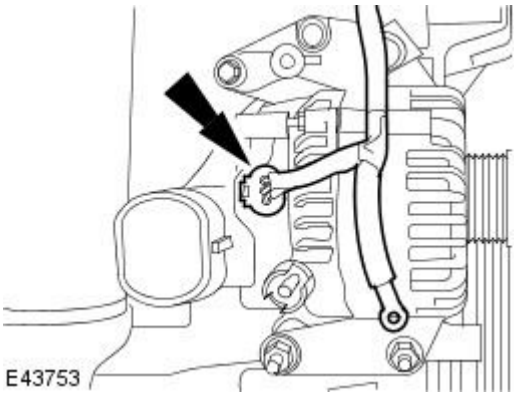

159. Connect the generator electrical connector.

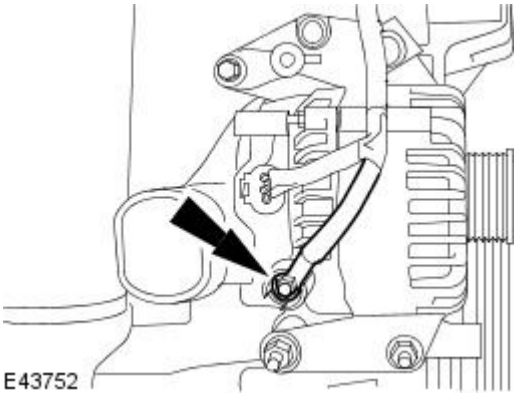

160. Attach the generator electrical connector.

- Tighten to 8 Nm.

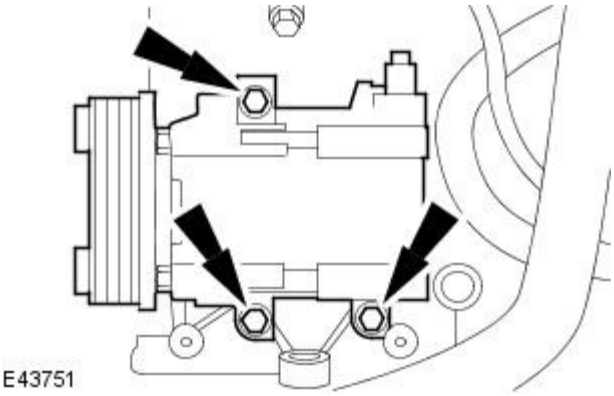

161. Install the air conditioning (AC) compressor.

- Tighten to 25 Nm.

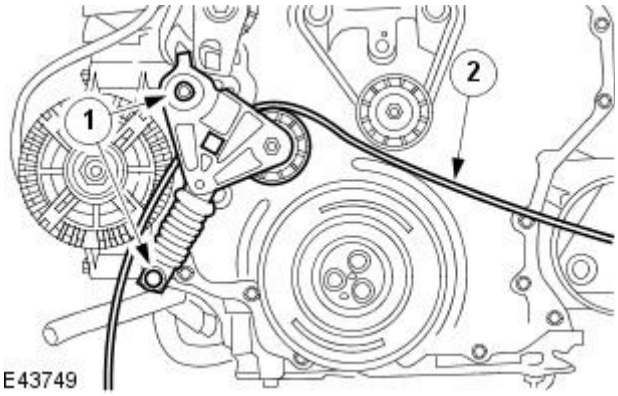

162. Install the accessory drive belt tensioner.

1. Install the accessory drive belt.
2. Install the accessory drive belt tensioner.

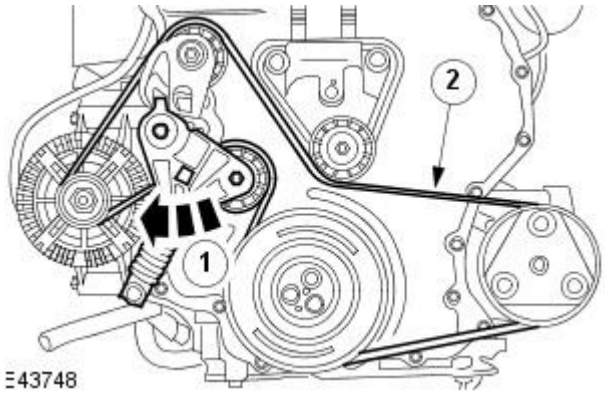

163. Attach the accessory drive belt.

1. Reposition the accessory drive belt tensioner.
2. Attach the accessory drive belt.

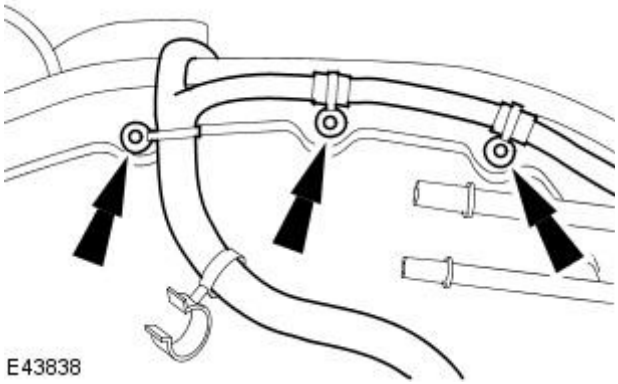

164. Install the wiring harness.

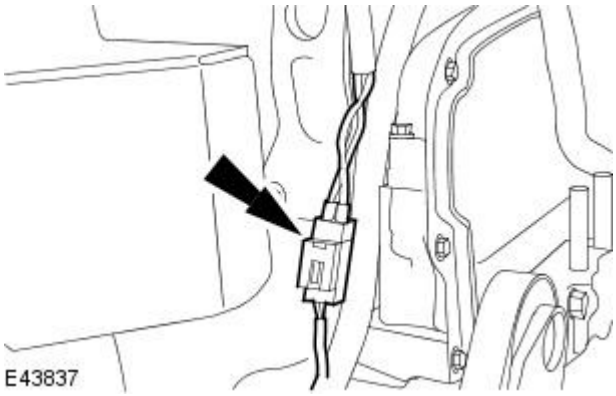

165. Connect the generator wiring harness electrical connector.

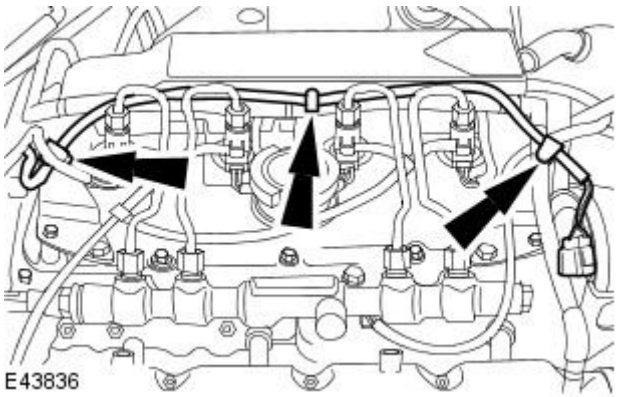

166. Attach the mass air flow (MAF) sensor wiring harness.

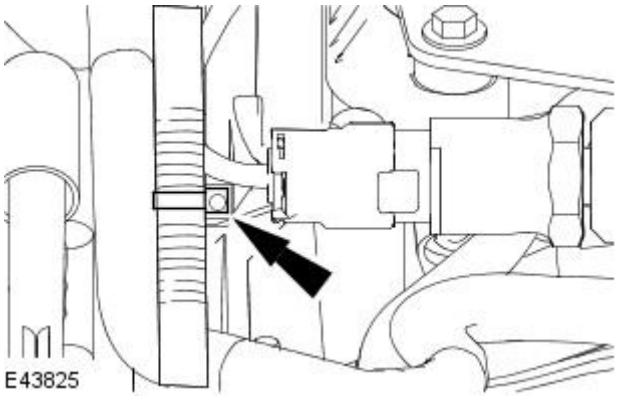

167. Attach the wiring harness to the retaining stud.

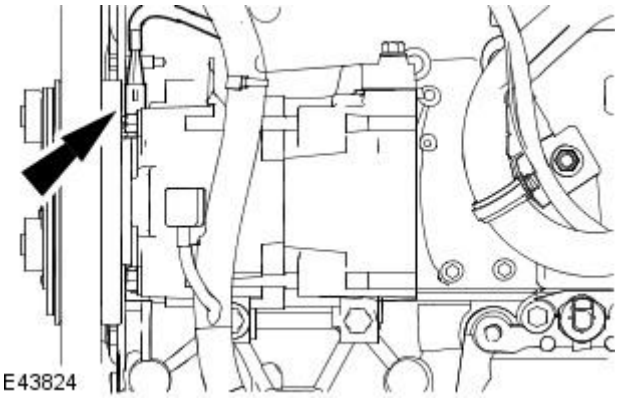

168. Connect the AC compressor electrical connector.

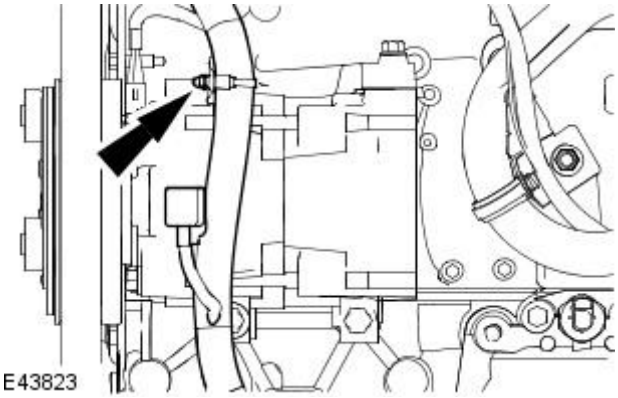

169. Attach the wiring harness to the AC compressor.

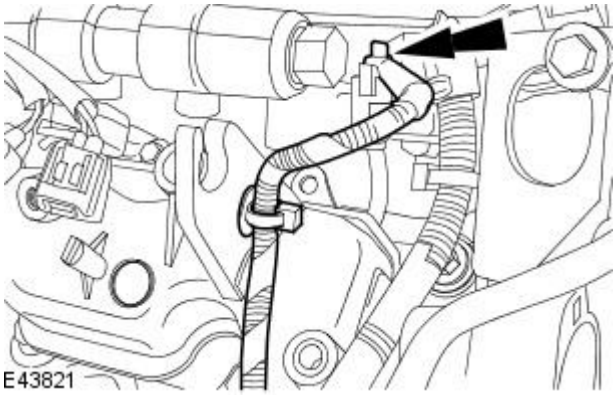

170. Attach the glow plug wiring harness.

- Tighten to 5 Nm.

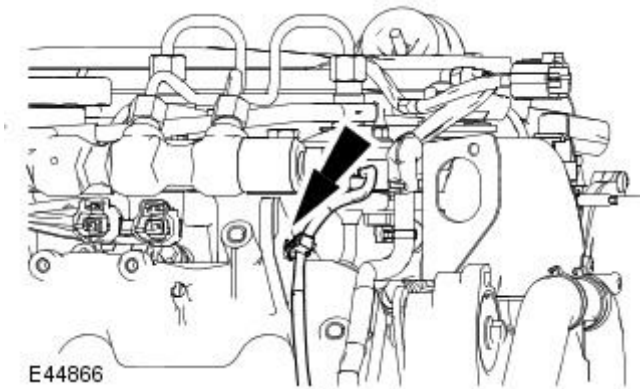

171. Attach the wiring harness to the intake manifold.

172. Remove the engine from the engine stand.

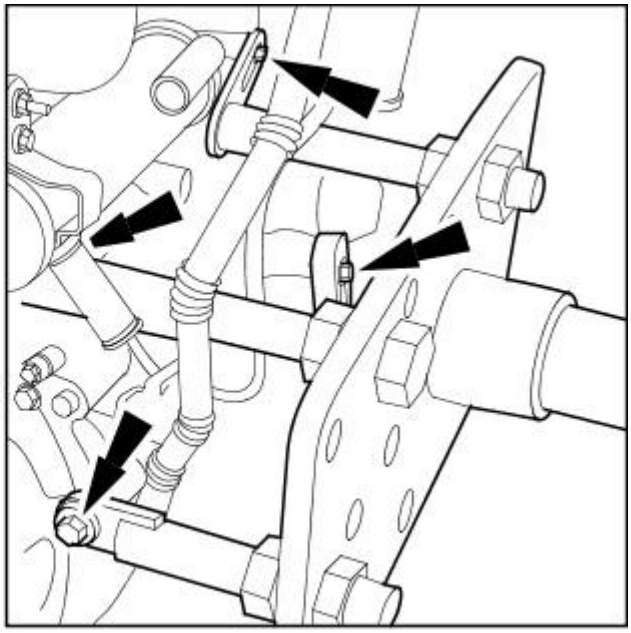

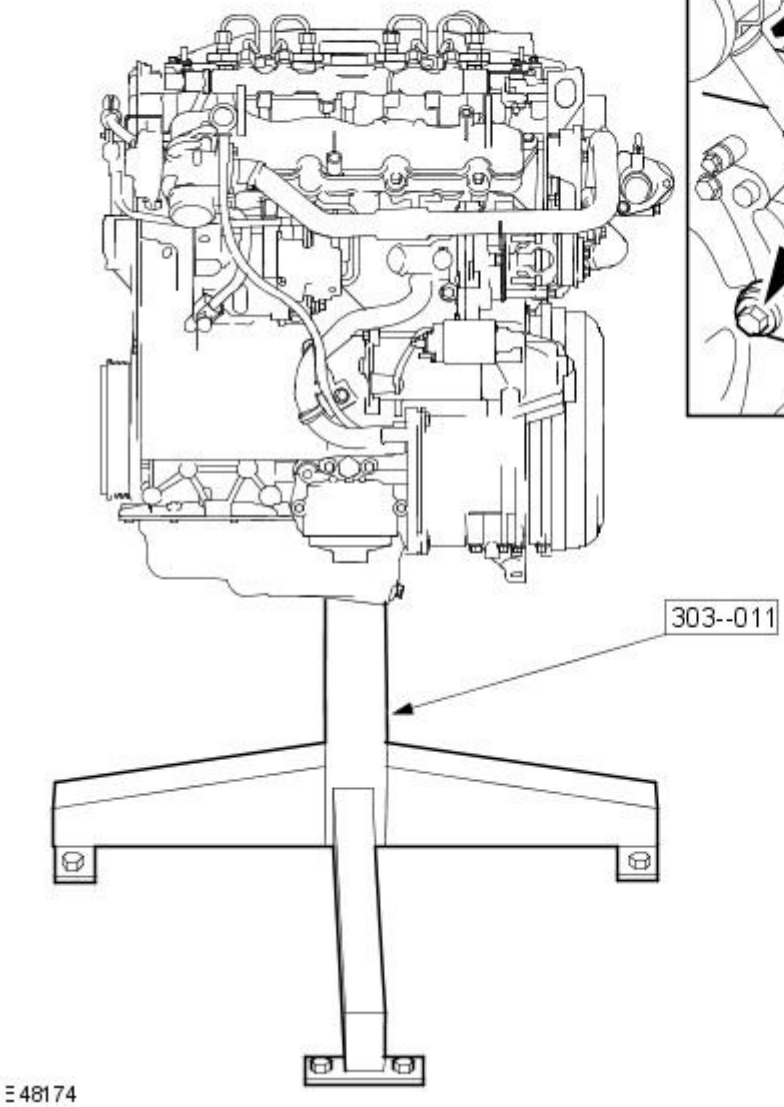

Engine - 2.0L Duratorq-TDCi / 2.2L Duratorq-TDCi (110kW / 150PS) - Puma - Engine2.0L Duratorq-TDCi

Installation

Special Tool(s)	
24003	Remover/Installer, Cooling Hose Clamp 303-397 (24-003)
HTJ12002	Powertrain assembly jack HTJ1200-02
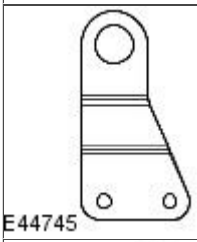 E44745	Engine lifting eye 303-1067
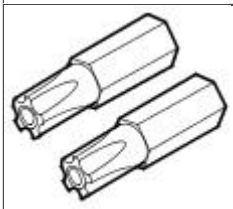 418-535	5 Point Security Torx Bit 418-535

Installation

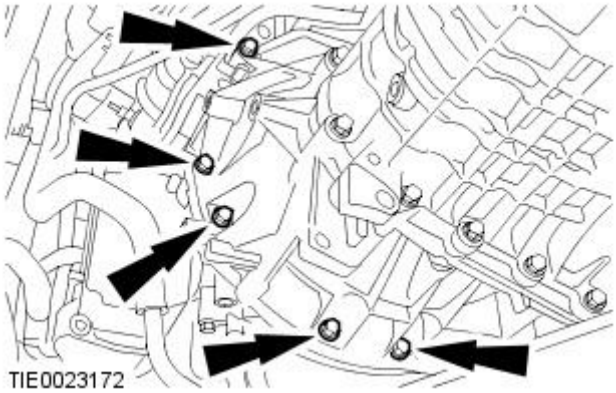
TIE0023172

1. CAUTION: Do not support the engine and transaxle assembly directly on the oil pan. Failure to follow this instruction may cause damage to the component.

Install the engine assembly to the transmission assembly.

- Tighten to 40 Nm.

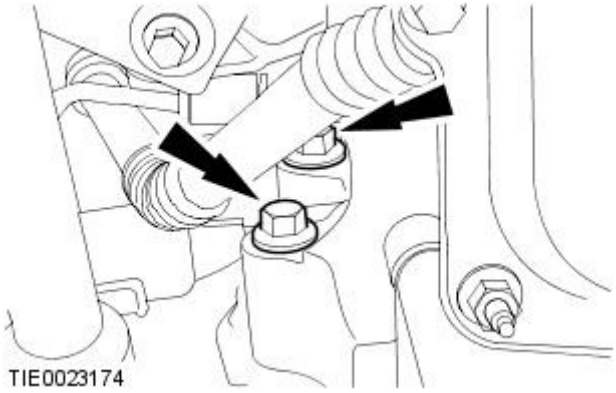
TIE0023174

2. Install the transmission right-hand retaining bolts.

- Tighten to 40 Nm.

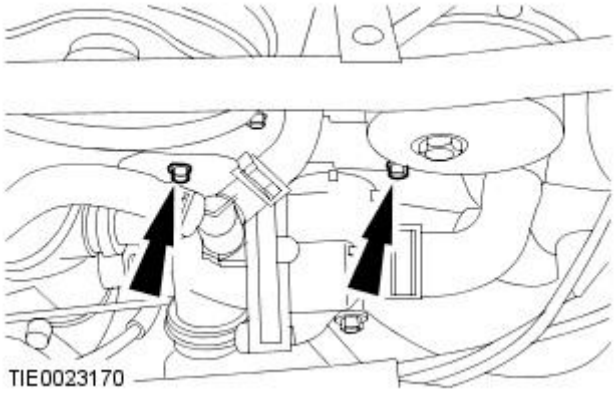

3. Install the transmission upper retaining bolts.

- Tighten to 40 Nm.

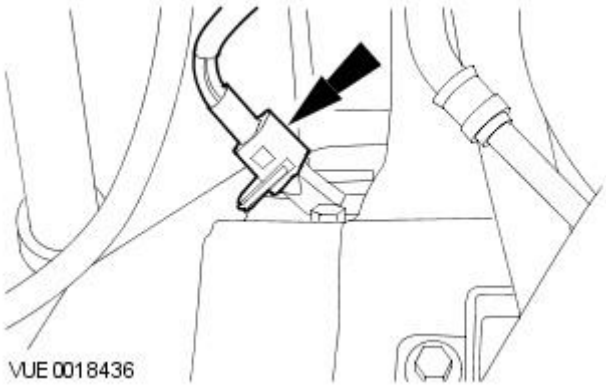

4. Connect the crankshaft sensor electrical connector.

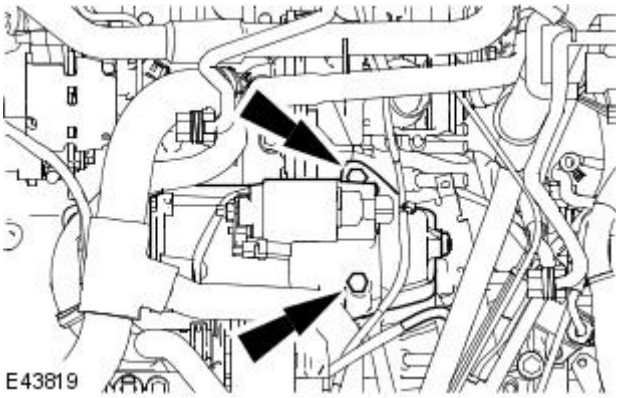

5. Install the starter motor.

- Tighten to 25 Nm.

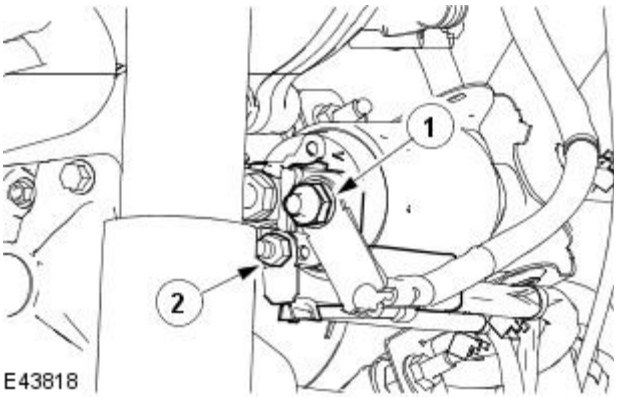

6. Attach the starter motor wiring harness.

1. Tighten to 12 Nm.
2. Tighten to 6 Nm.

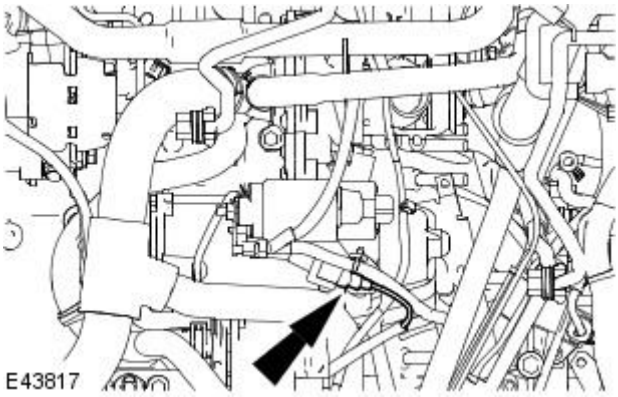

7. Connect the starter motor wiring harness electrical connector.

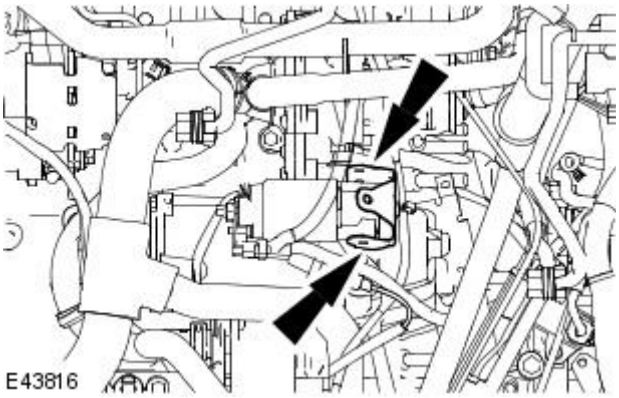

8. Install the starter motor wiring harness retaining bracket.

- Tighten to 20 Nm.

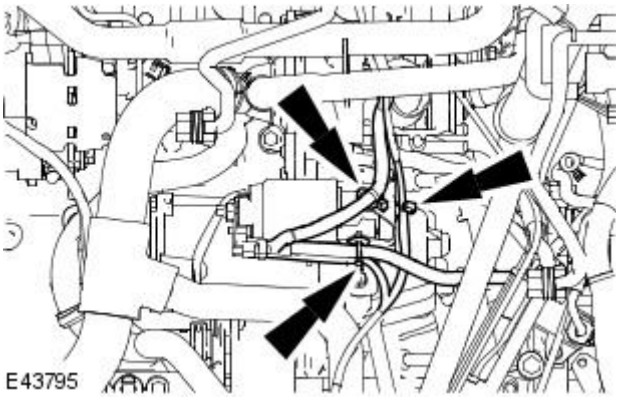

9. Attach the starter motor wiring harness.

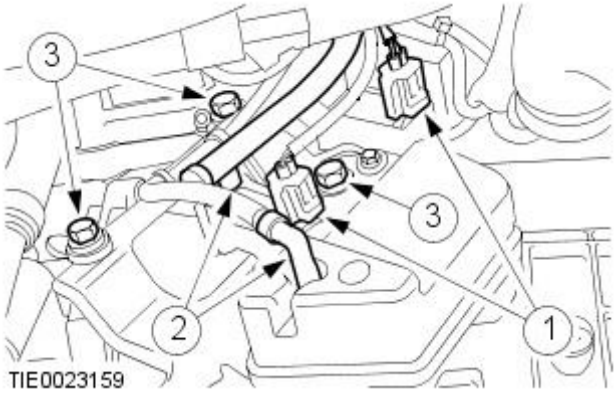

10. Install the vacuum regulator solenoid valve.

1. Connect the electrical connectors.
2. Attach the vacuum hoses.
3. Install the vacuum regulator solenoid valve.

- Tighten to 23 Nm.

11. Connect the reverse lamp switch electrical connector.

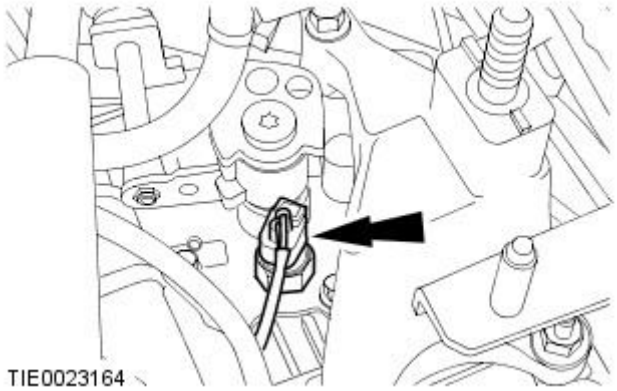

12. Install the charge air cooler pipe.

- Tighten to 4 Nm.

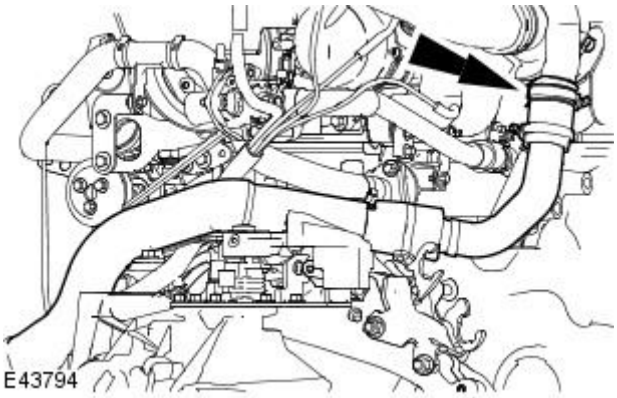

13. Attach the reverse lamp switch wiring harness retaining clip.

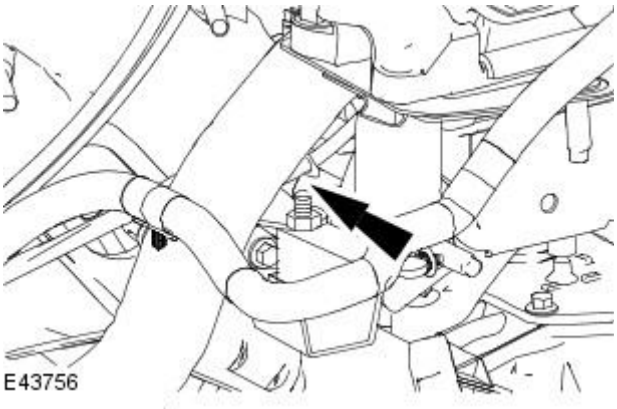

14. Install the charge air cooler pipe retaining nut.

- Tighten to 23 Nm.

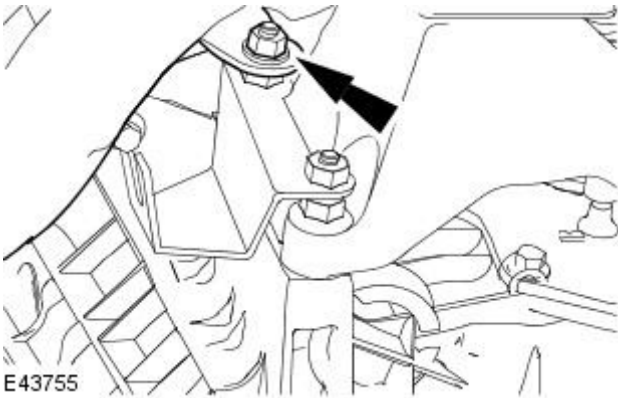

15. CAUTION: Do not support the engine and transaxle assembly directly on the oil pan. Failure to follow this instruction may cause damage to the component.

Using a suitable hydraulic lift install the engine and transmission to the subframe.

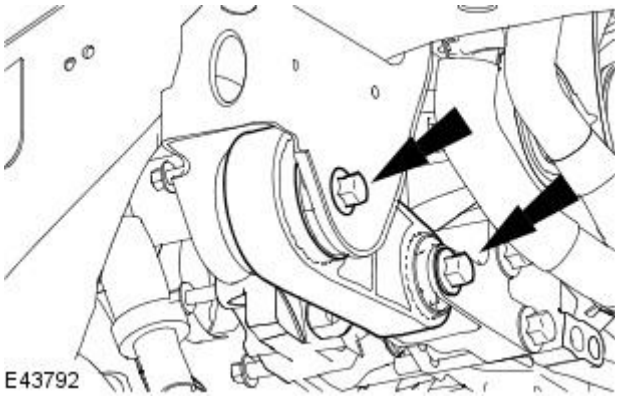

16. Install the engine roll restrictor.

- Tighten to 80 Nm.

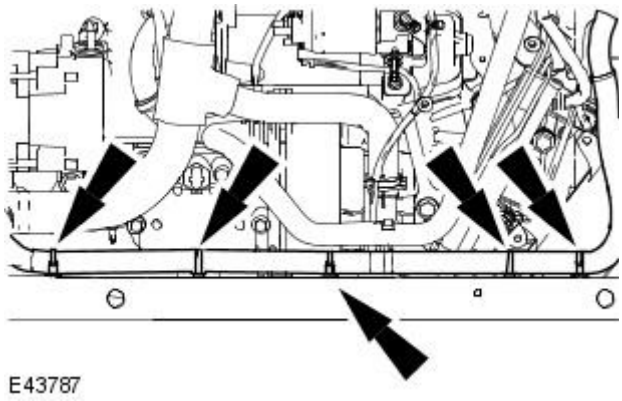

17. Attach the wiring harness.

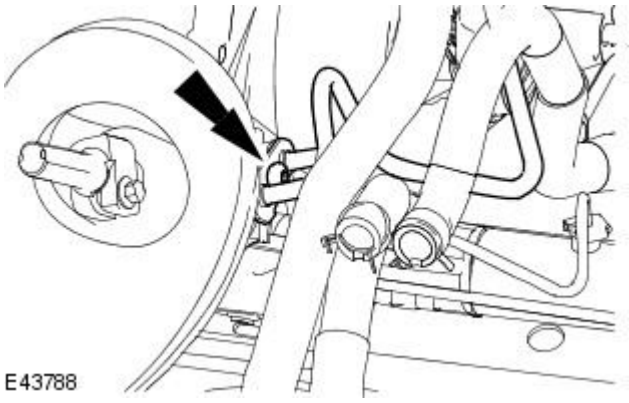

18. NOTE: Un-Cap the exposed ports.

• NOTE: Install new O-ring seals.

Connect the the power steering lines.

- Tighten to 10 Nm.

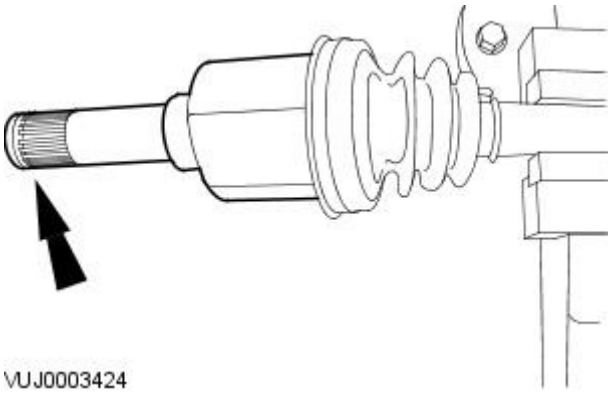

19. Install a new drive halfshaft snap ring.

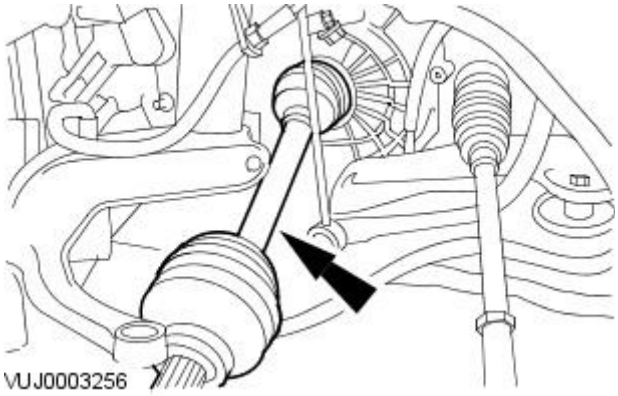

20. CAUTIONS:

Make sure the CV joint splines are located fully. Do not use excessive force when engaging the CV joint into the transmission.

Do not damage the oil seal.

Install the drive halfshaft.

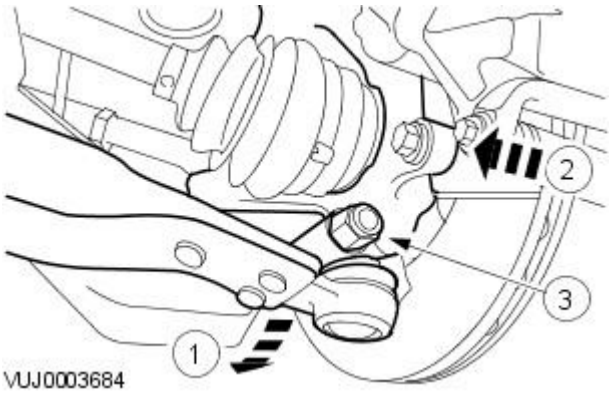

21. NOTE: Left-hand shown, right-hand similar.

Attach the wheel knuckle.

1. Reposition the lower arm.
2. Attach the wheel knuckle.
3. Install a new lower arm ball joint retaining nut and bolt.

- Tighten to 83 Nm.

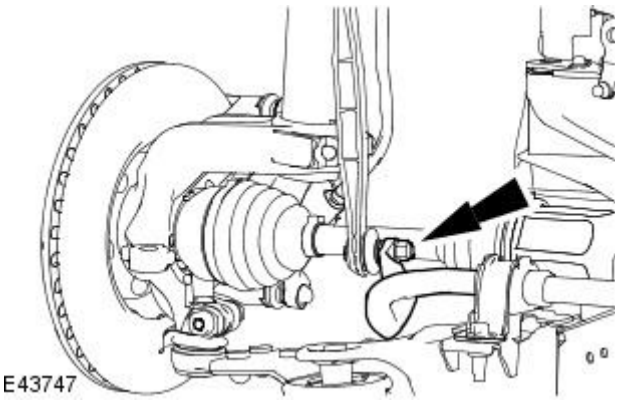

22. NOTE: Left-hand shown, right-hand similar.

Install a new anti-roll bar link retaining nut.

- Tighten to 48 Nm.

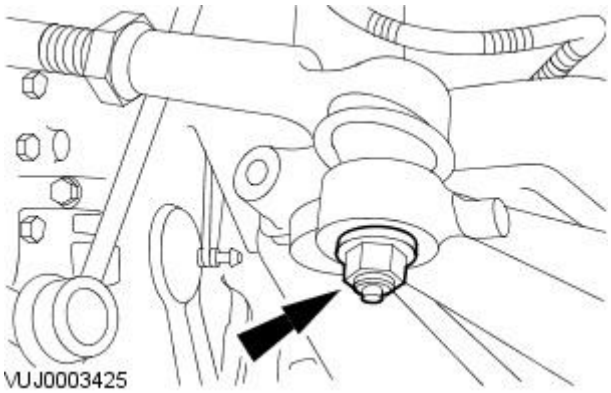

23. NOTE: Left-hand shown, right-hand similar.

Install a new tie rod-end retaining nut.

- Tighten to 35 Nm.

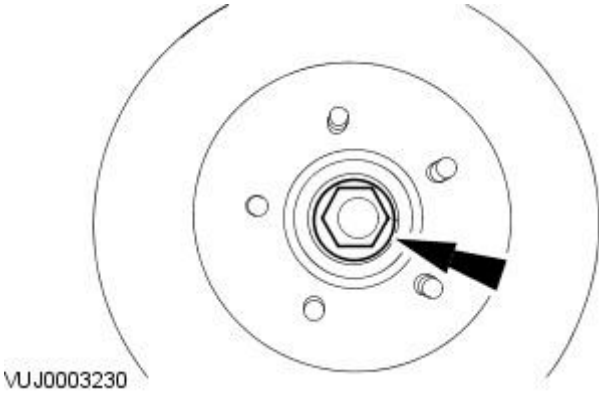

24. NOTE: Left-hand shown, right-hand similar.

Loosely install a new wheel hub nut.

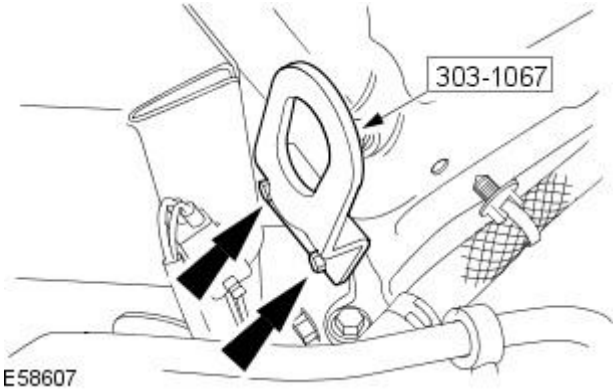

25. Remove the engine rear lifting eye.

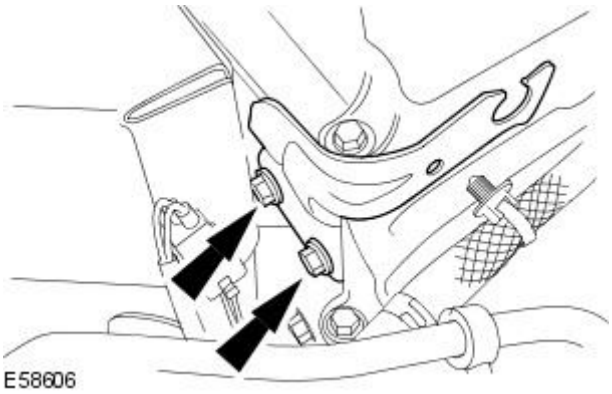

26. Install the engine cover rear mount bracket.

- Tighten to 23 Nm.

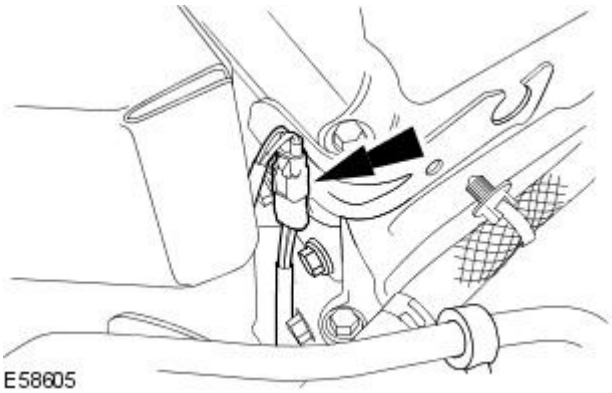

27. Attach the electrical connector.

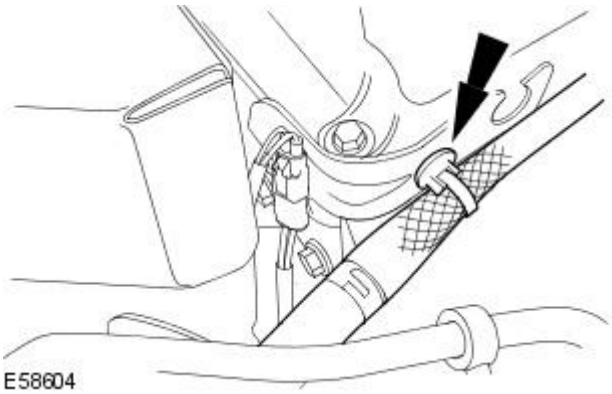

28. Attach the engine harness.

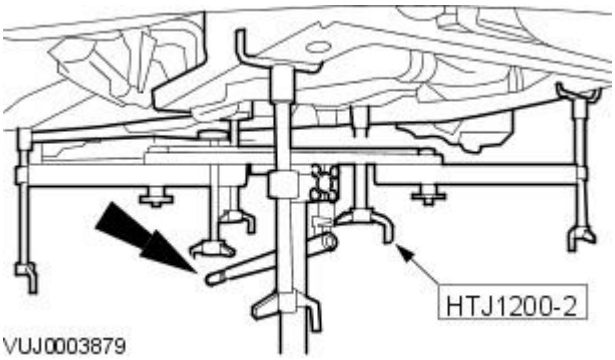

29. WARNING: Raise the special tool platform slowly. Failure to follow this instruction can result in personal injury.

Install the engine.

- Raise the special tool.

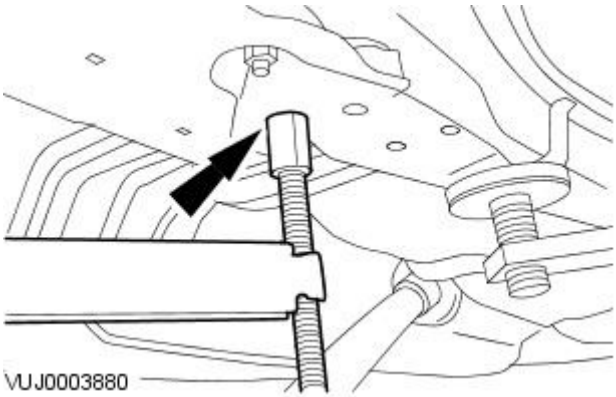

30. NOTE: Left-hand shown, right-hand similar.

Make sure the special tool rear height adjuster aligns into the locating hole in the vehicle floor pan.

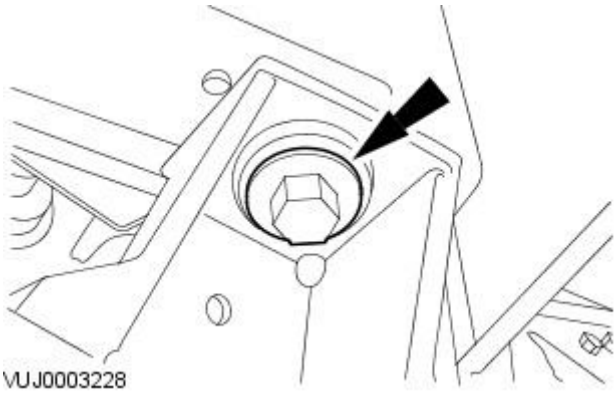

31. NOTE: Left-hand shown, right-hand similar.

Loosely install the front subframe retaining bolts.

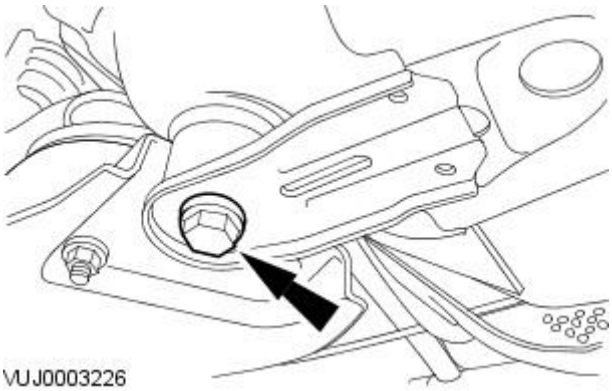

32. NOTE: Left-hand shown, right-hand similar.

Install the front subframe reinforcement plate.

- Loosely install the front subframe rear retaining bolts.

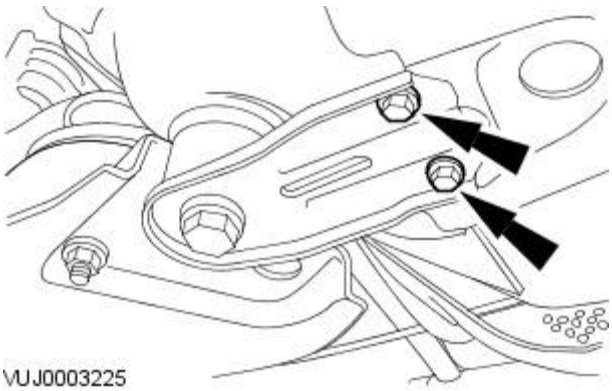

33. NOTE: Left-hand shown, right-hand similar.

Install the front subframe reinforcement plate retaining bolts.

- Tighten to 70 Nm.

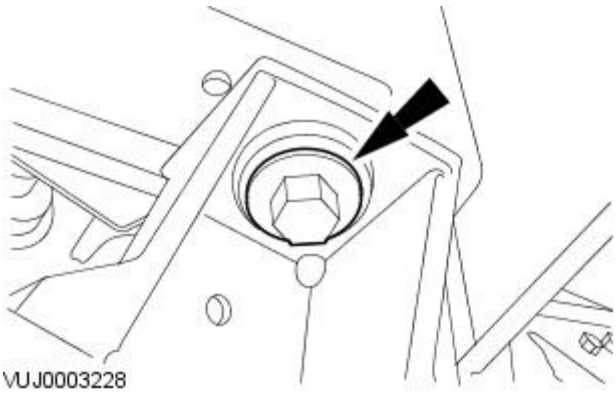

34. NOTE: Left-hand shown, right-hand similar.

Fully tighten the front subframe retaining bolts.

- Tighten to 142 Nm.

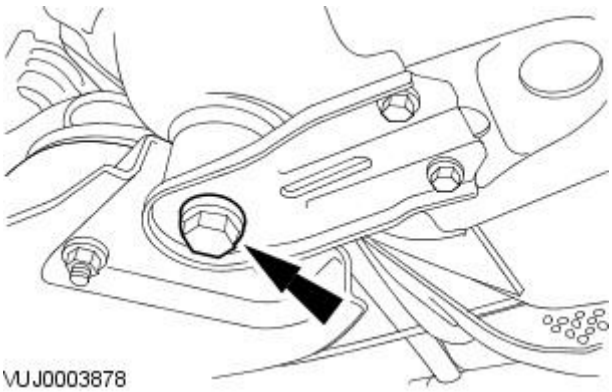

35. NOTE: Left-hand shown, right-hand similar.

Fully tighten the front subframe retaining bolts.

- Tighten to 142 Nm.

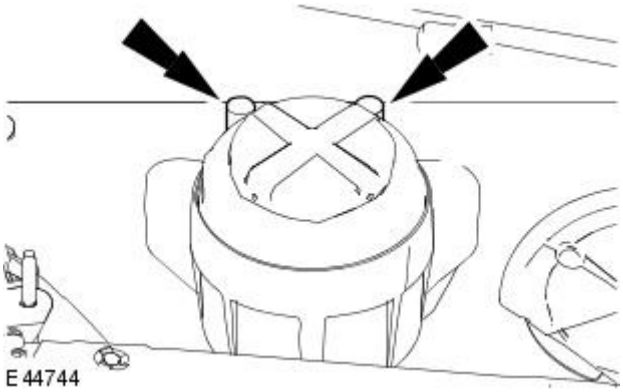

36. NOTE: Install new retaining nuts.

Install the engine front mount retaining nuts.

- Tighten to 80 Nm.

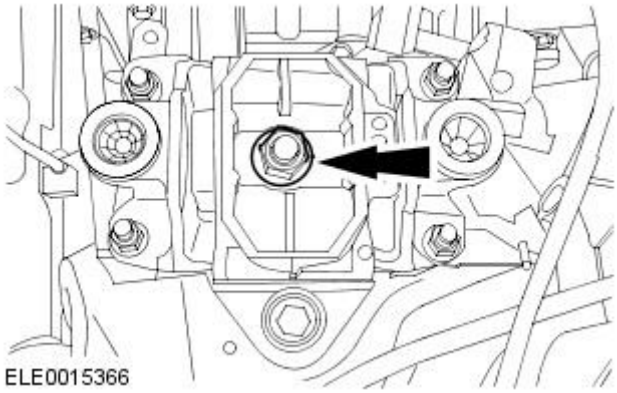

37. NOTE: Install a new retaining nut.

Install the engine rear mount retaining nut.

- Tighten to 133 Nm.

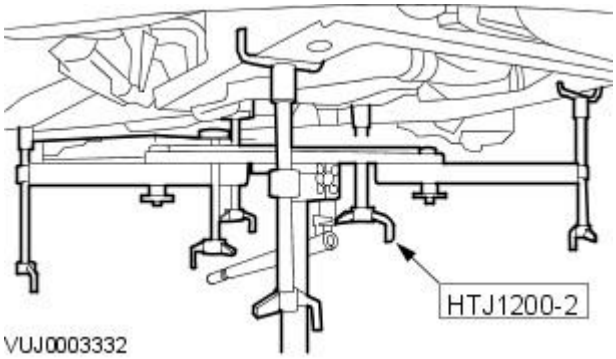

38. Remove the special tool.

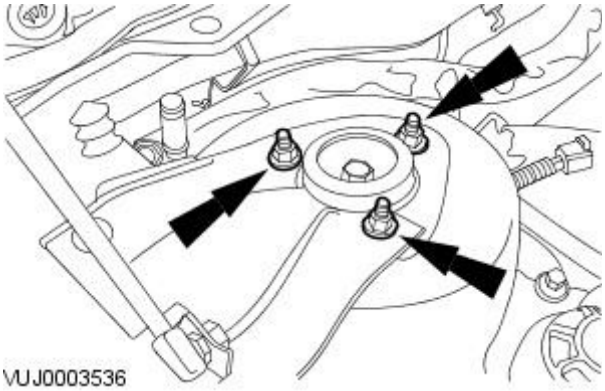

39. Lower the vehicle.

40. Attach the strut and spring assembly.

- Tighten to 30 Nm.

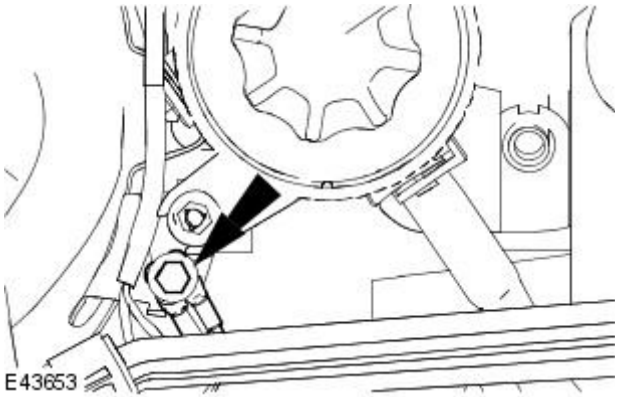

41. Attach the engine wiring harness earth lead.

- Tighten to 10 Nm.

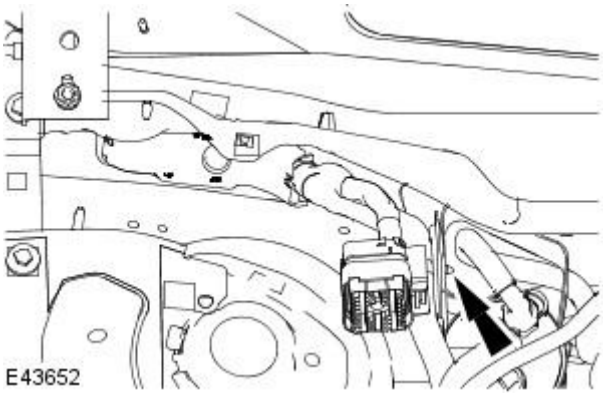

42. Attach the engine wiring harness retaining clip.

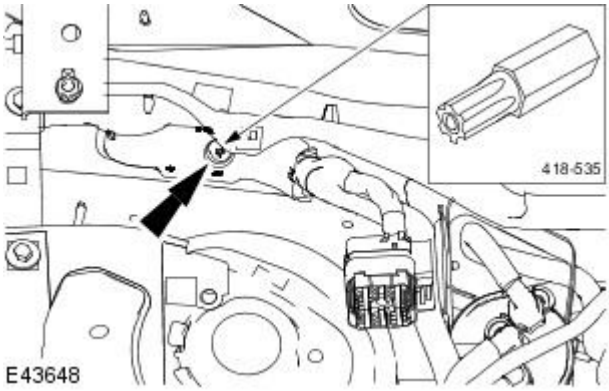

43. CAUTION: Make sure that the electrical connector locates correctly in the ECM. Do not force or overtighten the electrical connector. Failure to follow this instruction may result in damage to the components.

• NOTE: Bolt remains captive in the ECM electrical connector.

Using the special tool, connect the ECM harness electrical connector.

- Tighten to 10 Nm.

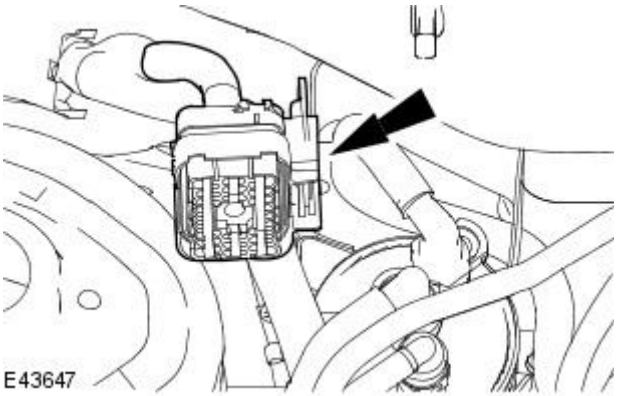

44. Attach the engine wiring harness electrical connector.

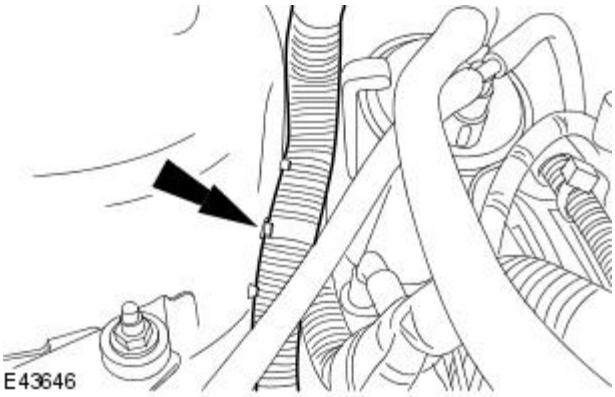

45. Attach the engine wiring harness retaining clip.

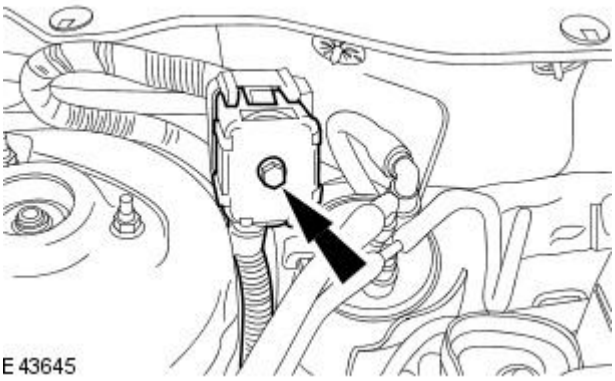

46. Connect the engine wiring harness electrical connector.

- Tighten to 10 Nm.

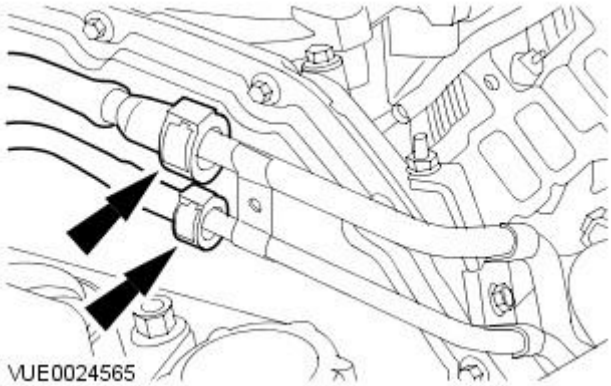

47. Connect the fuel lines.
For additional information, refer to: Quick Release Coupling - Push Connect (310-00 Fuel System - General Information, General Procedures).

- Remove the blanking plugs.

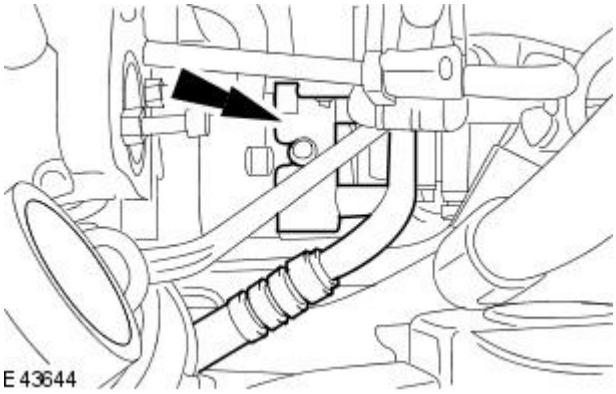

48. NOTE: Install new O-ring seals.

• NOTE: Un-cap the exposed ports.

Connect the air conditioning compressor lines.

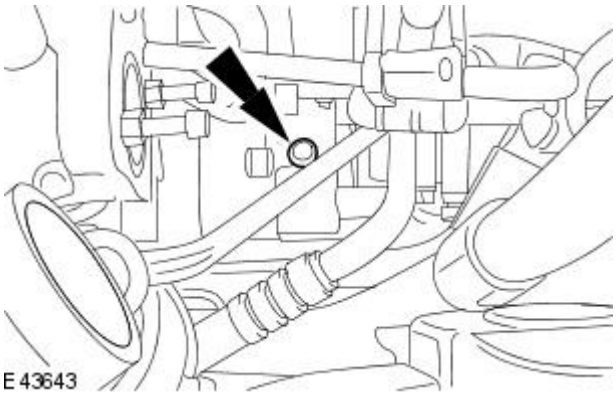

49. Fully tighten the air conditioning compressor line retaining bolt.

- Tighten to 20 Nm.

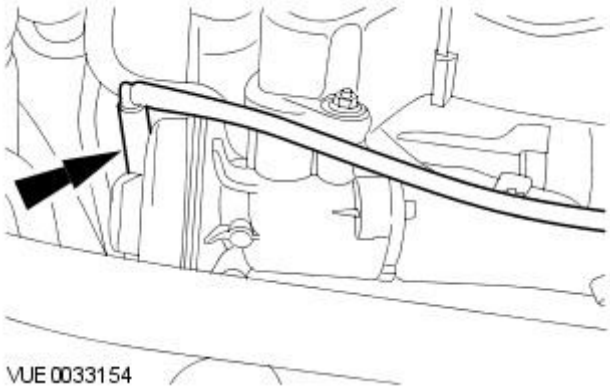

50. NOTE: Un-cap the exposed ports.

Connect the exhaust gas recirculation (EGR) valve vacuum pipe.

51. NOTE: Un-cap the exposed ports.

Install the power assisted steering hose.

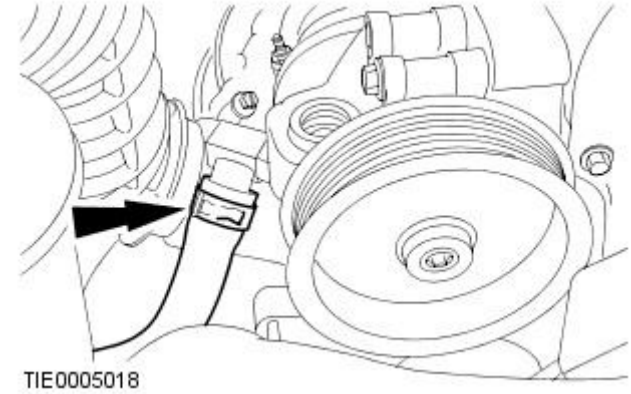

52. Attach the power assisted steering hose.

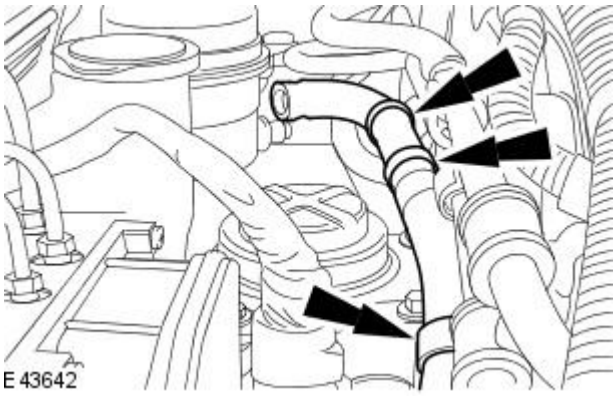

53. Connect the power assisted steering hose.

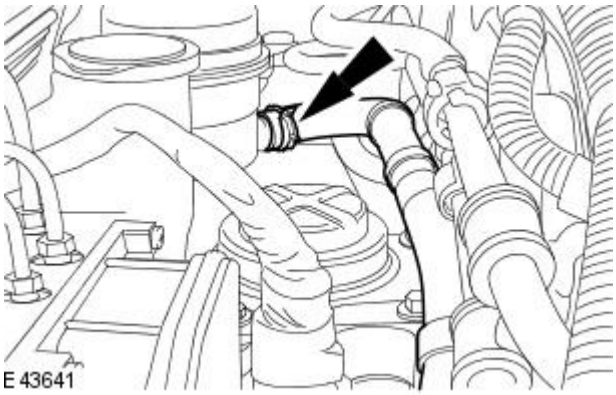

54. Install the exhaust manifold to EGR valve tube.
For additional information, refer to: Exhaust Gas Recirculation (EGR) Cooler to EGR Valve Tube (303-08 Engine Emission Control - 2.0L Duratorq-TDCi/2.2L Duratorq-TDCi (110kW/150PS) - Puma, Removal and Installation).

55. Connect the charge air cooler hose.

- Tighten to 4 Nm.

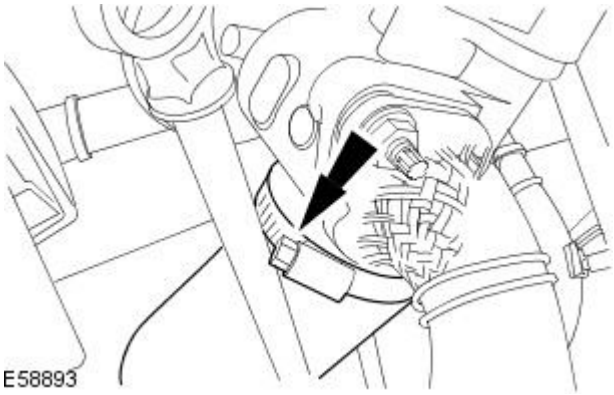

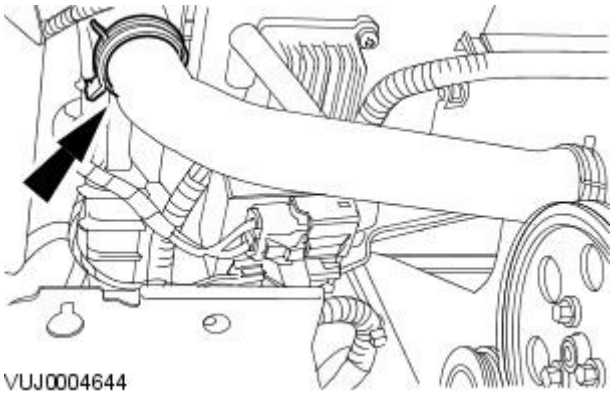

56. Connect the radiator upper coolant hose.

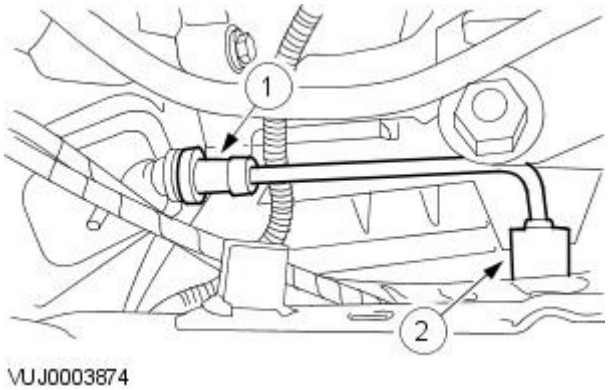

57. CAUTION: If brake fluid is spilt on the paintwork, the affected area must be immediately washed down with cold water.

- NOTE: Un-cap the exposed ports.
- NOTE: Remove the tie strap.

Attach the clutch slave cylinder pipe.

1. Connect and fully seat the clutch slave cylinder pipe and retaining clip.
2. Attach the clutch slave cylinder pipe.

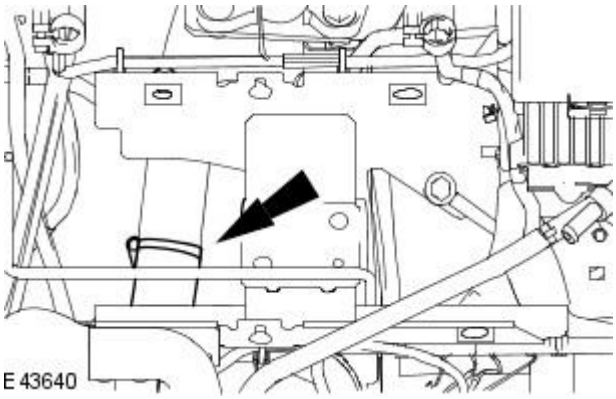

58. Connect the charge air cooler hose.

- Tighten to 4 Nm.

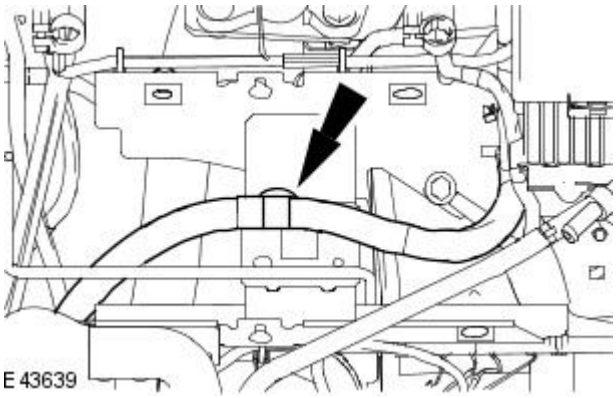

59. Attach the wiring harness to the battery tray mount.

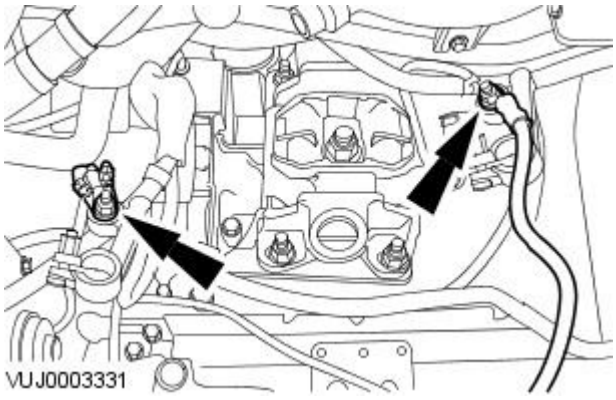

60. Connect the battery cables.

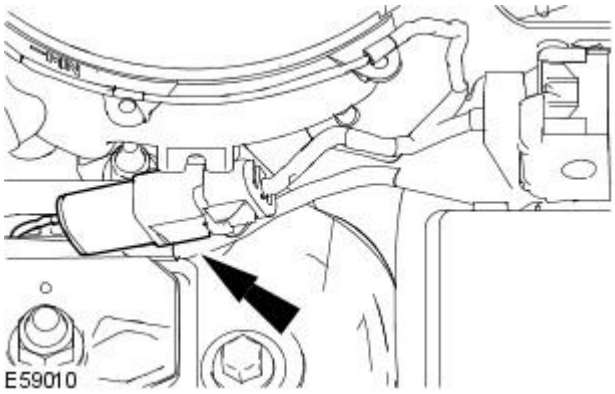

61. Connect the glow plug harness electrical connector.

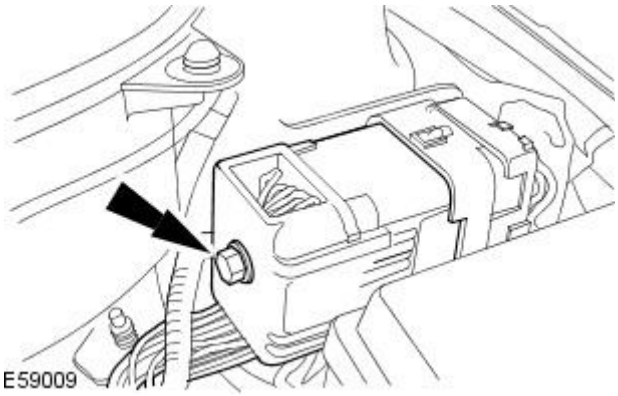

62. Connect the engine harness electrical connector.

- Tighten to 10 Nm.

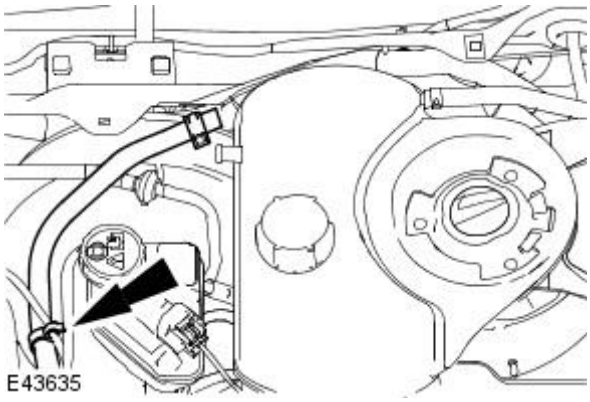

63. Attach the the expansion tank outlet hose.

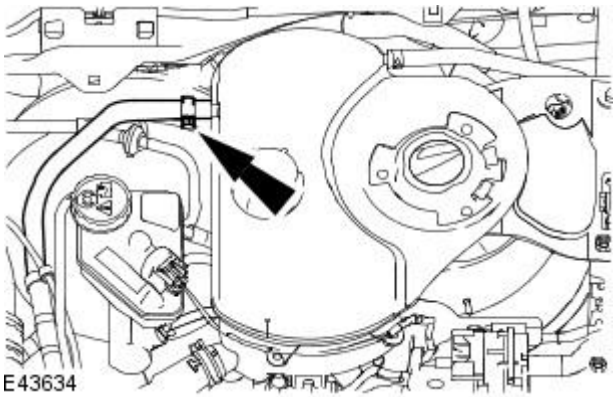

64. Connect the expansion tank outlet hose.

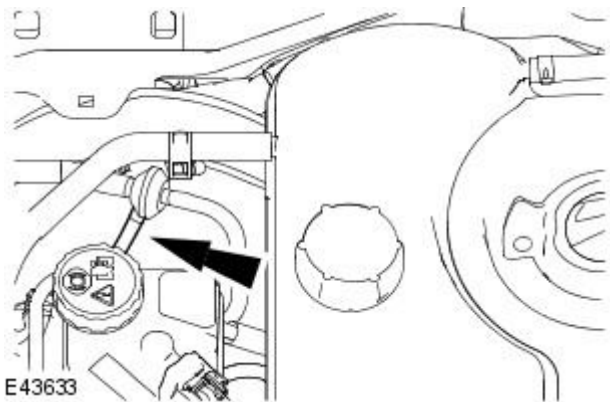

65. Connect the exhaust gas recirculation (EGR) valve module vacuum hose.

66. Connect the brake vacuum pump vacuum hose.

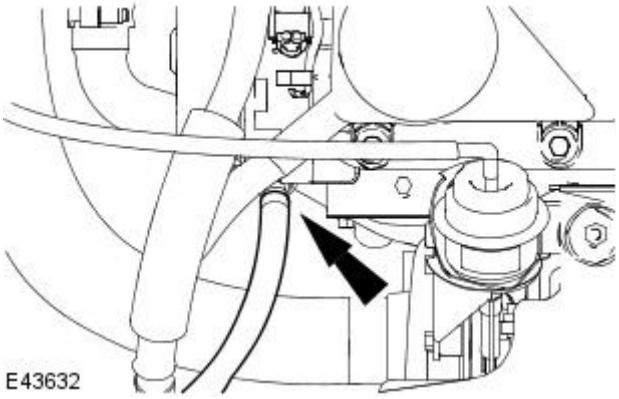

67. Raise the vehicle.

68. NOTE: Un-cap the exposed ports.

Connect the power assisted steering hose.

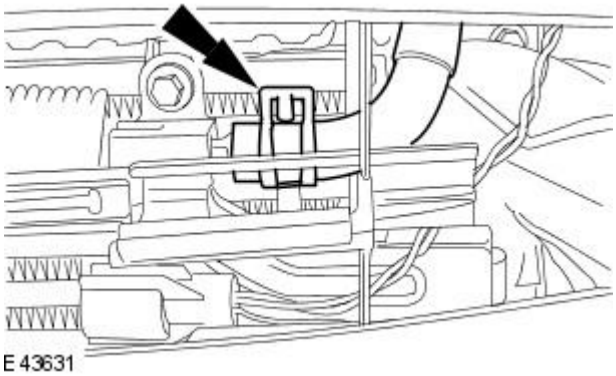

69. NOTE: Left-hand shown, right-hand similar.

Install the front bumper splitter vain finisher trims.

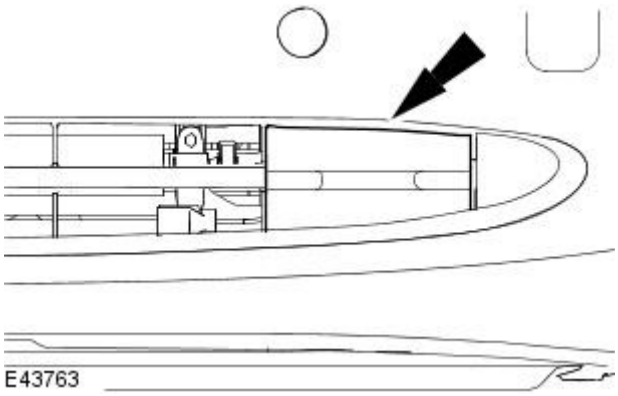

70. Install the front bumper splitter vain.

E43762

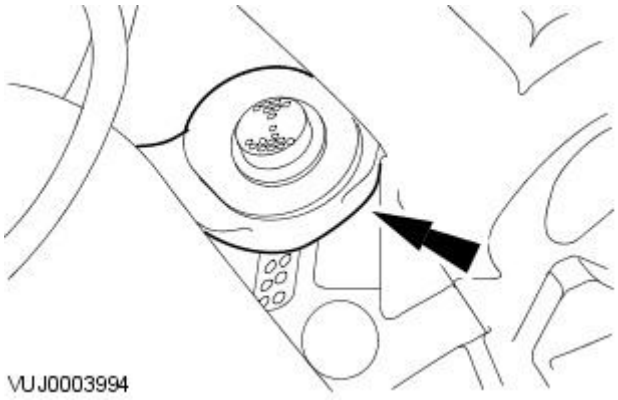

71. NOTE: Remove the selector cables tie straps.

Attach the selector cables.

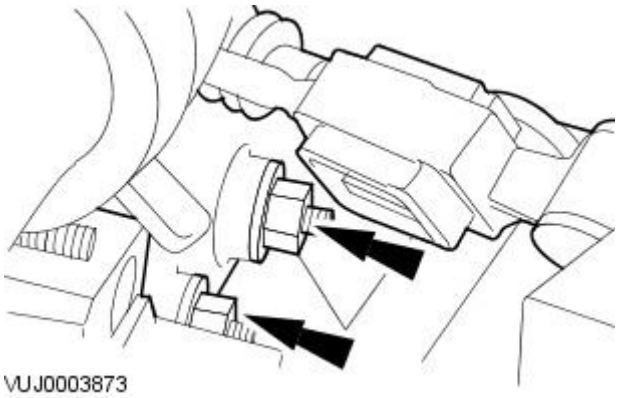

72. Attach the selector cables.

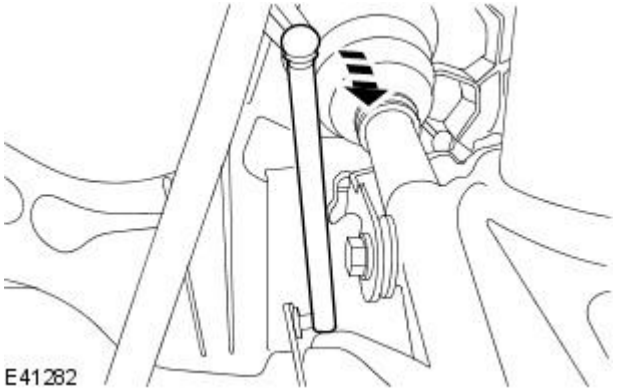

73. Connect the high intensity discharge (HID) sensor drop arm.

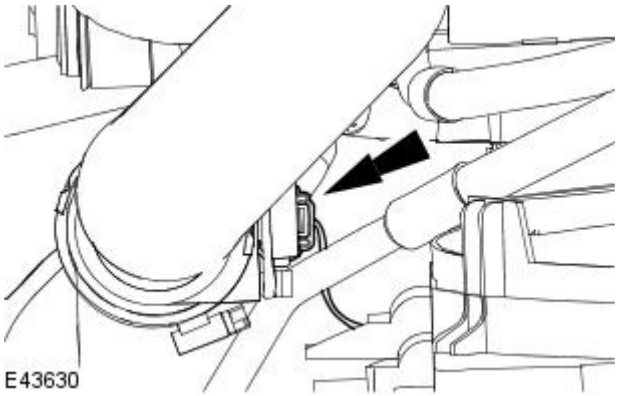

74. Connect the air temperature sensor electrical connector.

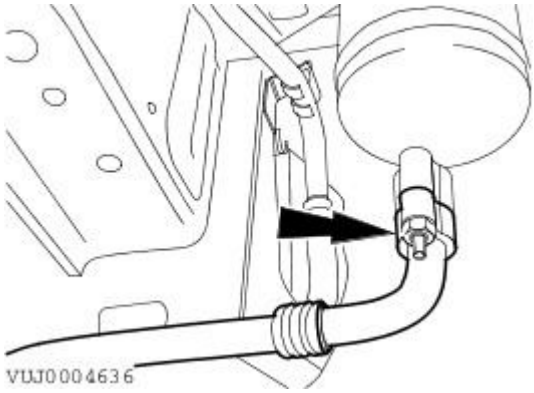

75. NOTE: Install a new O-ring seal.

- NOTE: Un-cap the exposed ports.

Connect the suction accumulator pipe.

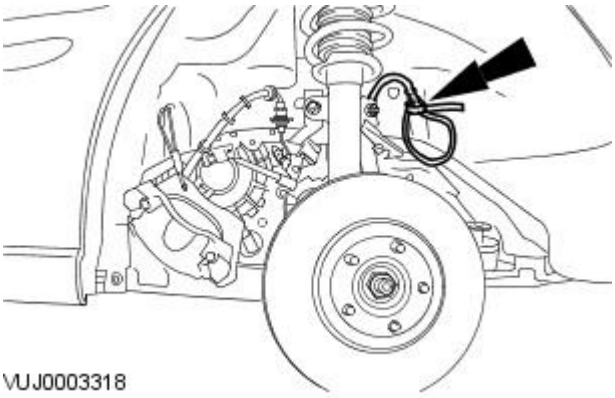

76. NOTE: Remove the anti-lock braking system (ABS) wheel speed sensor tie straps.

- NOTE: Left-hand shown, right-hand similar.
- NOTE: Remove the tie strap.

Detach and reposition the ABS wheel speed sensor.

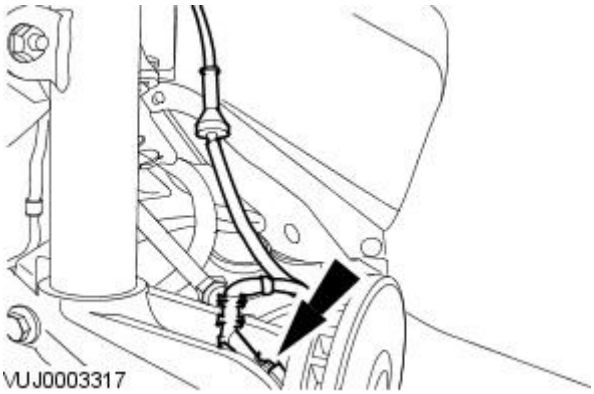

77. NOTE: Left-hand shown, right-hand similar.

Connect the ABS wheel speed sensor.

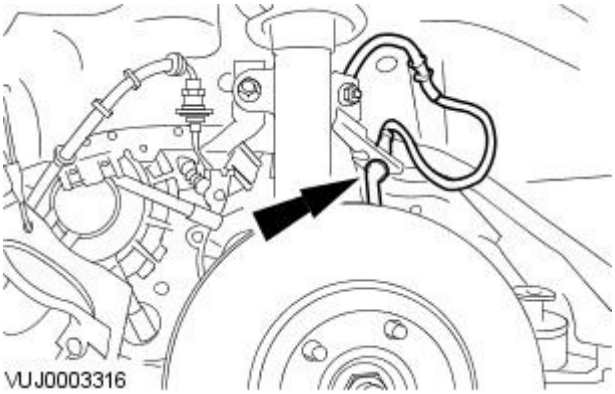

78. NOTE: Left-hand shown, right-hand similar.

Attach the ABS wheel speed sensor.

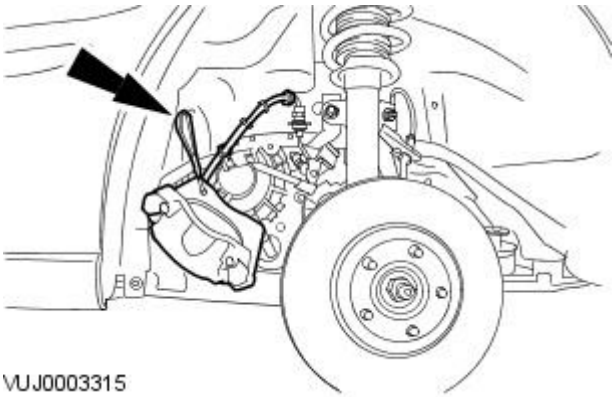

79. NOTE: Remove the brake caliper assembly tie straps.

- NOTE: Left-hand shown, right-hand similar.

Detach and reposition the brake caliper assembly.

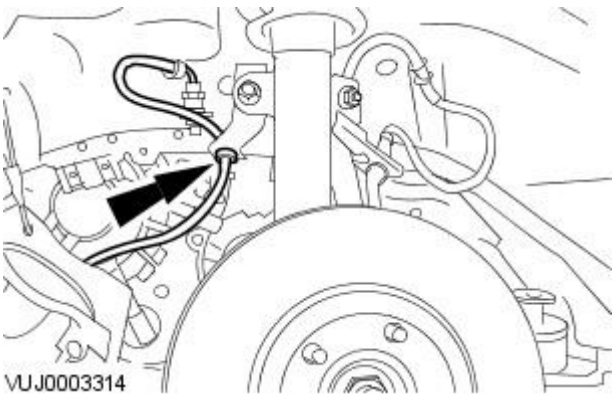

80. NOTE: Left-hand shown, right-hand similar.

Attach the brake pipe.

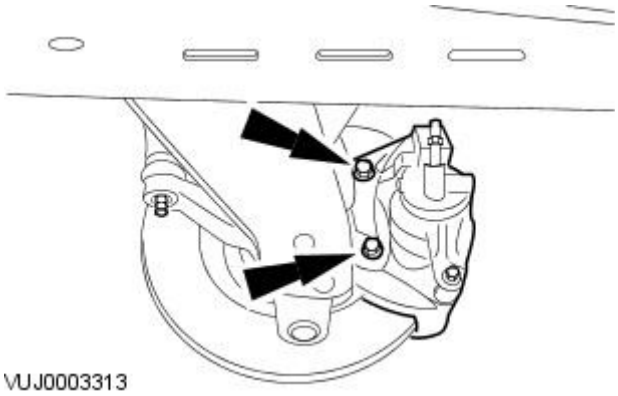

81. NOTE: Install new brake caliper anchor plate retaining bolts.

Attach the brake caliper and brake caliper anchor plate assembly.

- Tighten to 133 Nm.

82. Install the front brake pads.
For additional information, refer to: Brake Pads (206-03 Front Disc Brake, Removal and Installation).

83. Install the front wheels and tires.
For additional information, refer to: Wheel and Tire (204-04 Wheels and Tires, Removal and Installation).

84. NOTE: Right-hand shown, left-hand similar.

Remove the rear vehicle tie down strap.

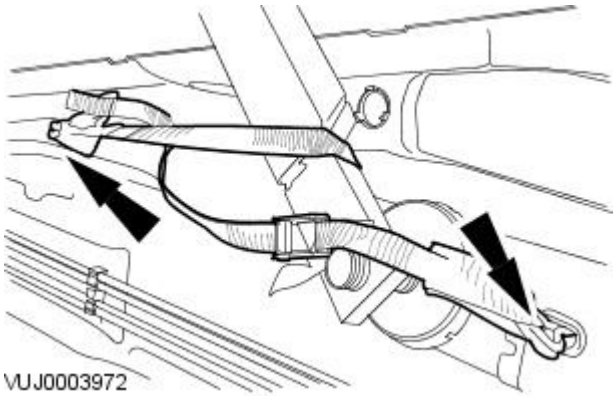

85. NOTE: Right-hand shown, left-hand similar.

Remove the front vehicle tie down strap.

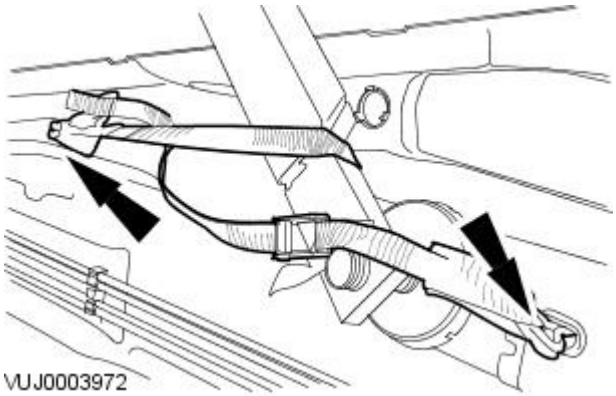

86. Connect the radiator lower coolant hose.

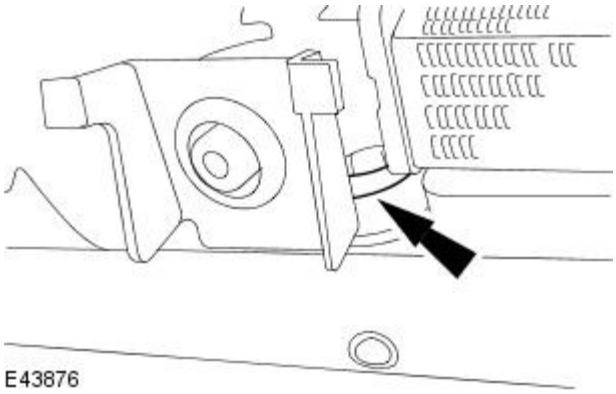

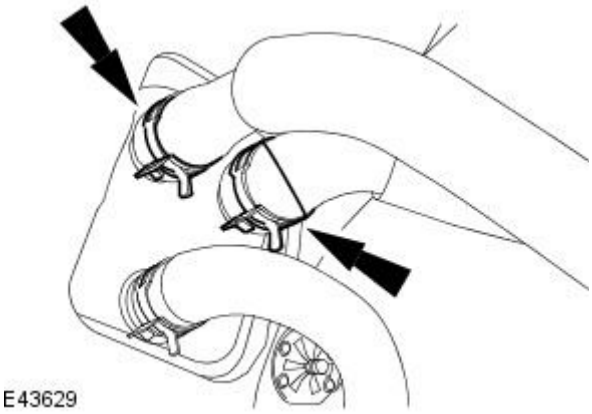

87. Connect the heater hoses to the heater core.

88. Install the exhaust flexible pipe.
For additional information, refer to: Exhaust Flexible Pipe - 2.0L Duratorq-TDCi/2.2L Duratorq-TDCi (110kW/150PS) - Puma (309-00 Exhaust System, Removal and Installation).

89. Install the battery tray.
For additional information, refer to: Battery Tray (414-01 Battery, Mounting and Cables, Removal and Installation).

90. Check and top up the transmission fluid level.
For additional information, refer to: Transaxle Draining and Filling - Vehicles With: 6-Speed Manual Transaxle - MMT6 (308-03 Manual Transmission/Transaxle, General Procedures).

91. Carry out the clutch bleeding system procedure.
For additional information, refer to: Clutch System Bleeding - Vehicles With: 6-Speed Manual Transaxle - MMT6 (308-00 Manual Transmission/Transaxle and Clutch - General Information, General Procedures).

92. Fill and bleed the cooling system.
For additional information, refer to: Cooling System Draining, Filling and Bleeding (303-03B Engine Cooling - 2.0L Duratorq-TDCi/2.2L Duratorq-TDCi (110kW/150PS) - Puma, General Procedures).

93. Recharge the air conditioning refrigerant.
For additional information, refer to: Air Conditioning (A/C) System Recovery, Evacuation and Charging (412-00 Climate Control System - General Information, General Procedures).

94. Attach the lower steering column shaft.

- Tighten to 25 Nm.

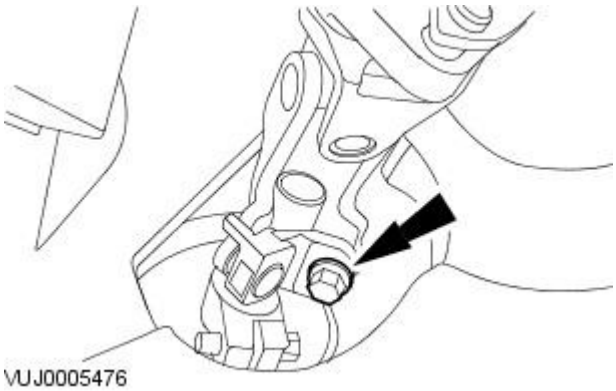

95. Bleed the power steering system.
For additional information, refer to: Power Steering System Filling (211-00 Steering System - General Information, General Procedures).

96. Carry out the gear shift cable adjustment procedure.
For additional information, refer to: Gearshift Cable Adjustment (308-00 Manual Transmission/Transaxle and Clutch - General Information, General Procedures).

97. Carry out the underbody misalignment check.
For additional information, refer to: Underbody Misalignment Check (502-00 Uni-Body, Subframe and Mounting System, General Procedures).

Engine - 2.0L Duratorq-TDCi / 2.2L Duratorq-TDCi (110kW / 150PS) - Puma - Engine2.2L Duratorq-TDCi (110kW / 150PS) - Puma

Installation

Special Tool(s)	
24003	Remover/Installer, Cooling Hose Clamp 303-397 (24-003)
HTJ12002	Powertrain assembly jack HTJ1200-02
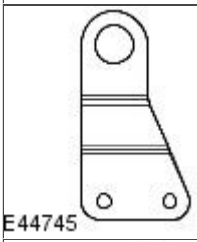 E44745	Engine lifting eye 303-1067
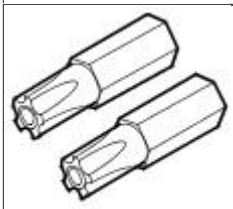 418-535	5 Point Security Torx Bit 418-535

Installation

All vehicles

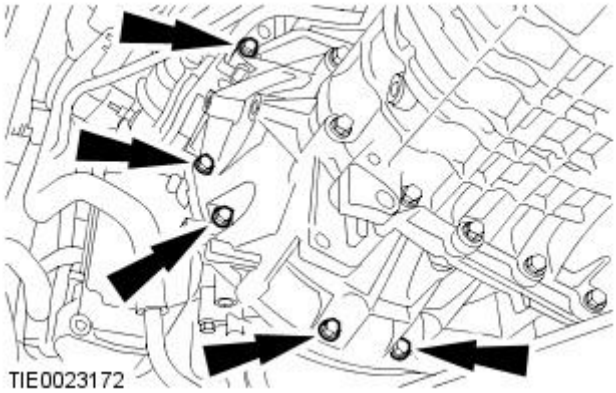

1. CAUTION: Do not support the engine and transaxle assembly directly on the oil pan. Failure to follow this instruction may cause damage to the component.

Using a suitable hydraulic lift, install the engine assembly to the transmission assembly.

- Tighten to 40 Nm.

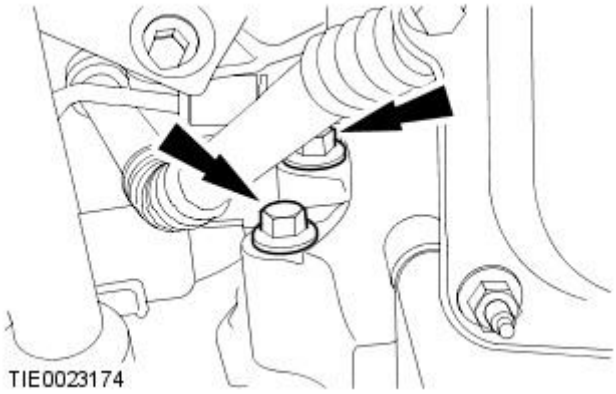

2. Install the transmission right-hand retaining bolts.

- Tighten to 40 Nm.

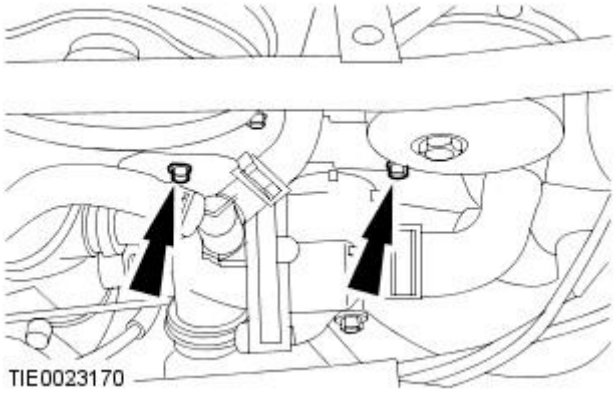

3. Install the transmission upper retaining bolts.

- Tighten to 40 Nm.

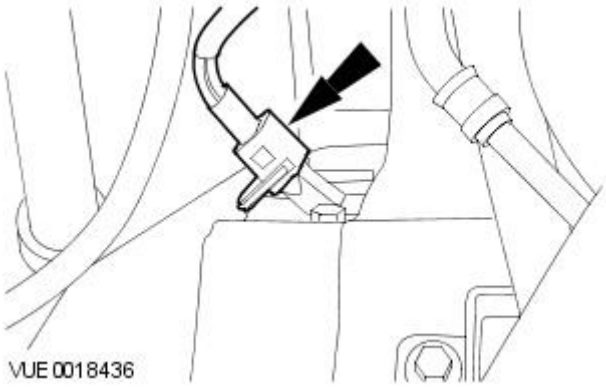

4. Connect the crankshaft position (CKP) sensor electrical connector.

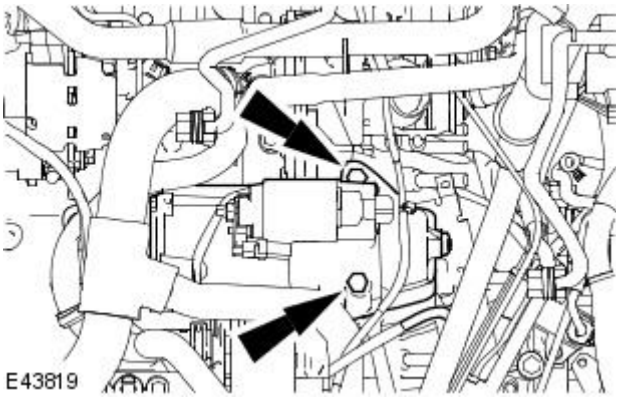

5. Install the starter motor.

- Tighten to 25 Nm.

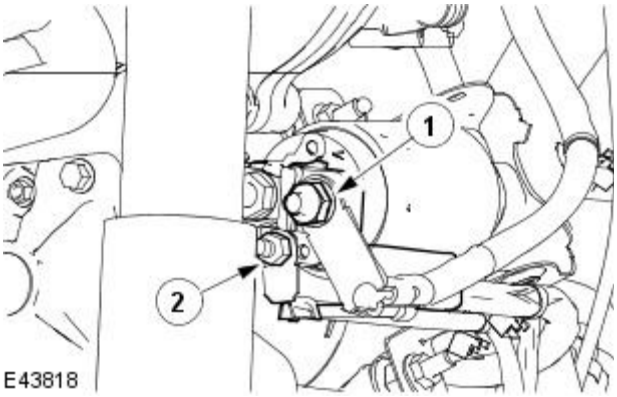

6. Attach the starter motor wiring harness.

1. Tighten to 12 Nm.
2. Tighten to 6 Nm.

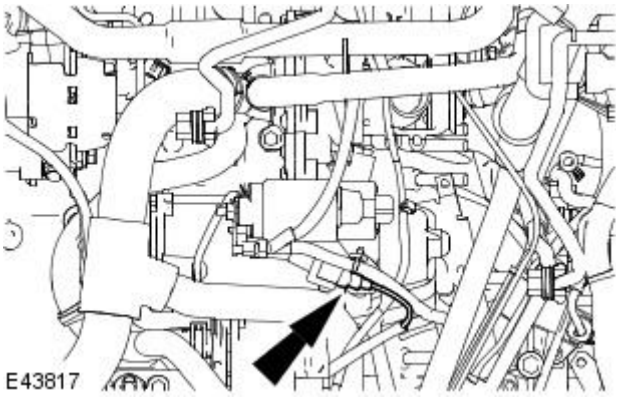

7. Connect the starter motor wiring harness electrical connector.

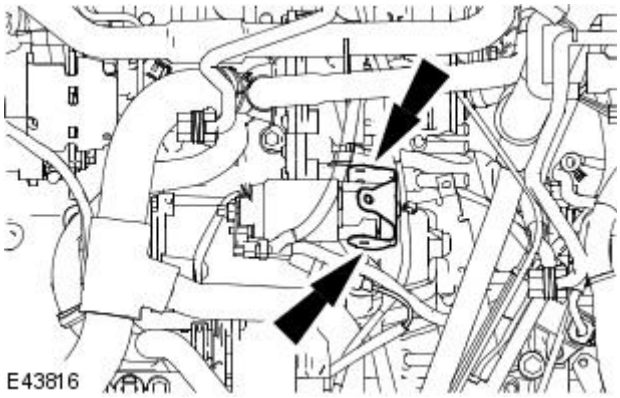

8. Install the starter motor wiring harness retaining bracket.

- Tighten to 20 Nm.

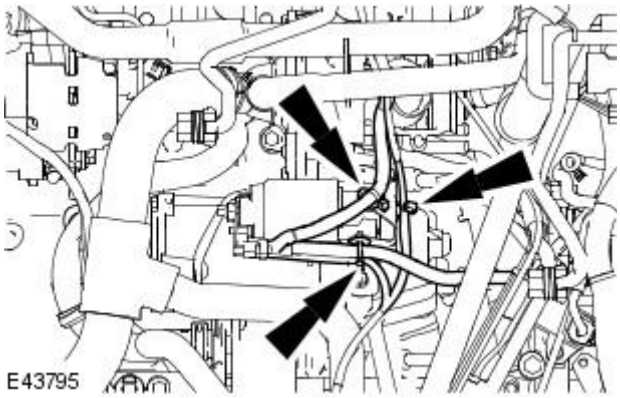

9. Attach the starter motor wiring harness.

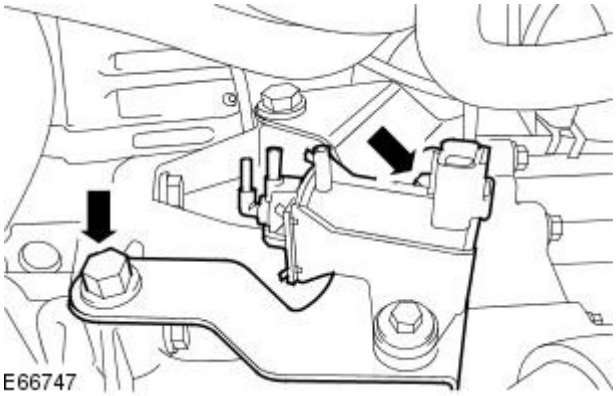

10. Install the emission control solenoid assembly.

- Tighten to 23 Nm.

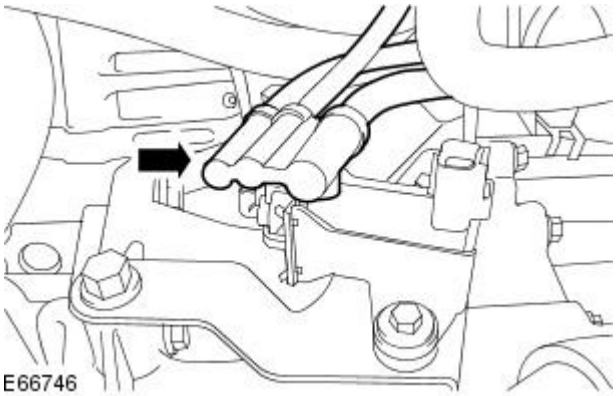

11. Connect the emission control solenoid hose.

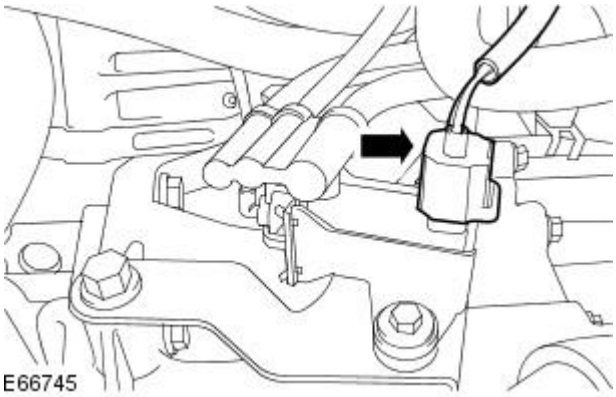

12. Connect the emission control solenoid electrical connector.

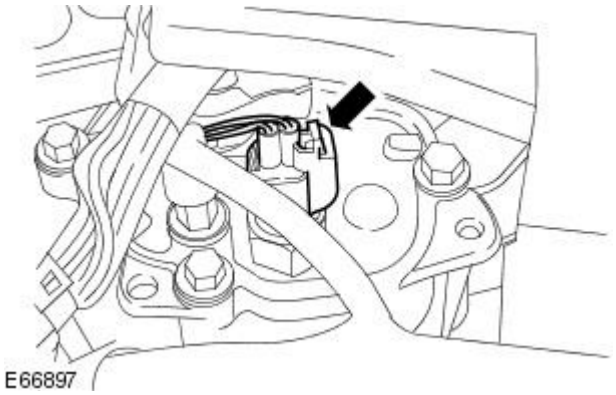

13. Connect the reverse lamp switch electrical connector.

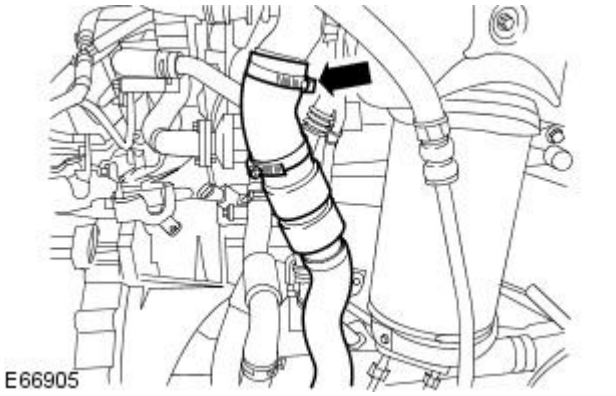

14. Install the charge air cooler pipe.

- Tighten to 4 Nm.

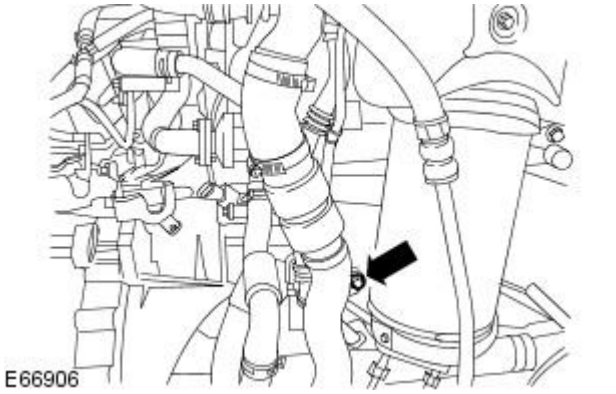

15. Install the charge air cooler pipe retaining bolt.

- Tighten to 10 Nm.

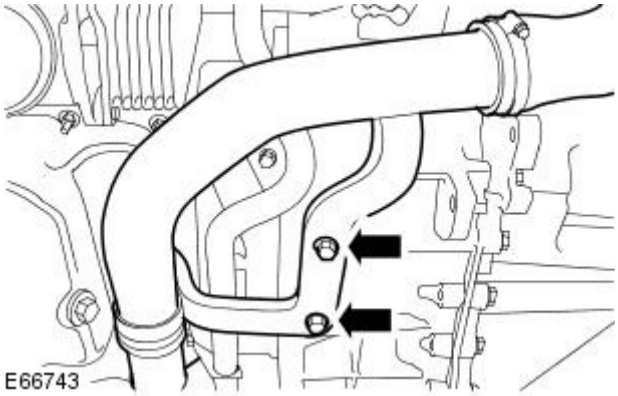

16. Install the charge air cooler intake pipe retaining bolts.

- Tighten to 35 Nm.

17. CAUTION: Do not support the engine and transaxle assembly directly on the oil pan. Failure to follow this instruction may cause damage to the component.

Using a suitable hydraulic lift, lower the engine and transmission from the subframe.

18. Attach the reverse lamp switch wiring harness retaining clip.

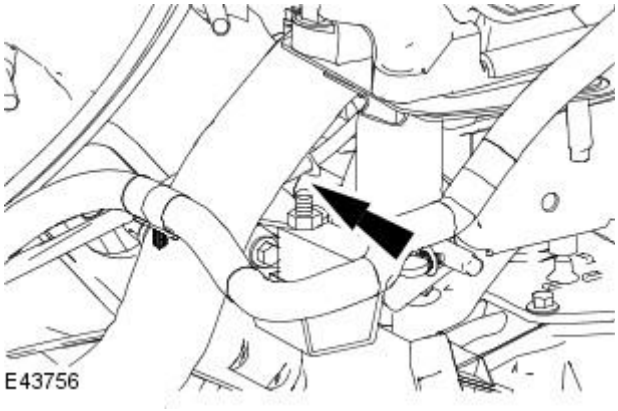

19. Install the charge air cooler pipe retaining nut.

- Tighten to 23 Nm.

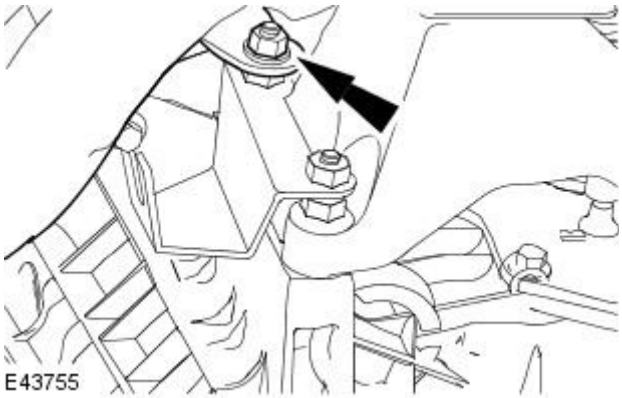

20. CAUTION: Do not support the engine and transaxle assembly directly on the oil pan. Failure to follow this instruction may cause damage to the component.

Using a suitable hydraulic lift install the engine and transmission to the subframe.

21. Install the engine roll restrictor.

- Tighten to 80 Nm.

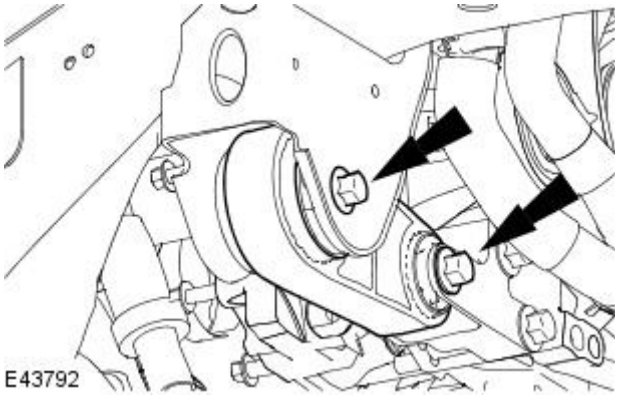

22. Attach the wiring harness.

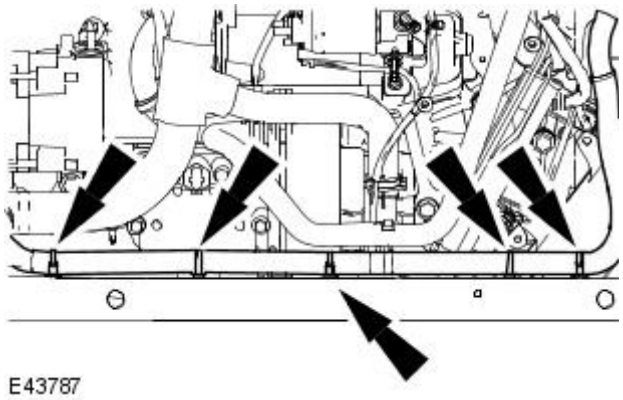

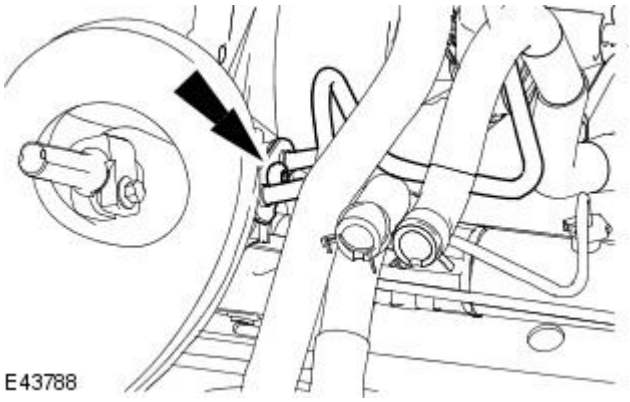

23. NOTE: Un-Cap the exposed ports.

• NOTE: Install new O-ring seals.

Connect the the power steering lines.

- Tighten to 10 Nm.

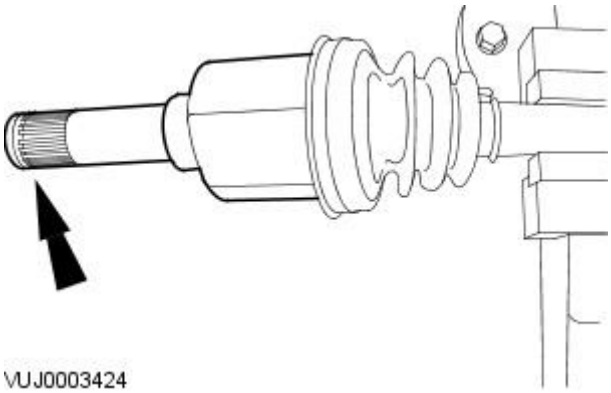

24. Install a new drive halfshaft snap ring.

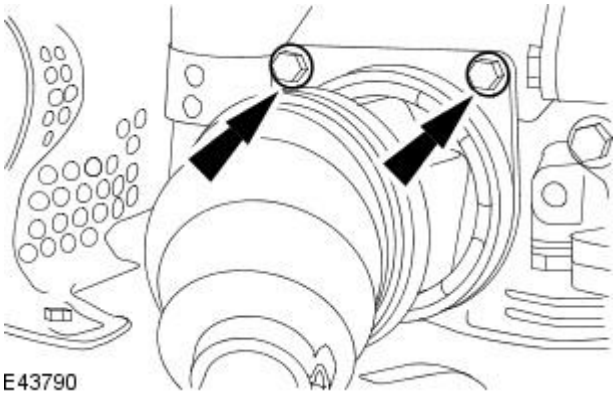

25. CAUTIONS:

Make sure the CV joint splines are located fully. Do not use excessive force when engaging the CV joint into the transmission.

Do not damage the oil seal.

Install the right-hand drive halfshaft.

- Tighten to 25 Nm.

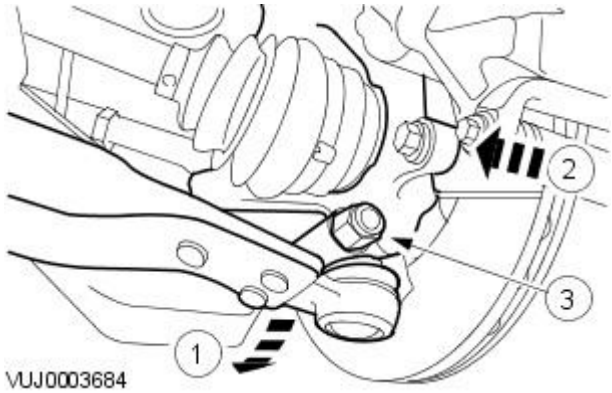

26. Attach the right-hand wheel knuckle.

1. Reposition the lower arm.
2. Attach the wheel knuckle.
3. Install a new lower arm ball joint retaining nut and bolt.

- Tighten to 83 Nm.

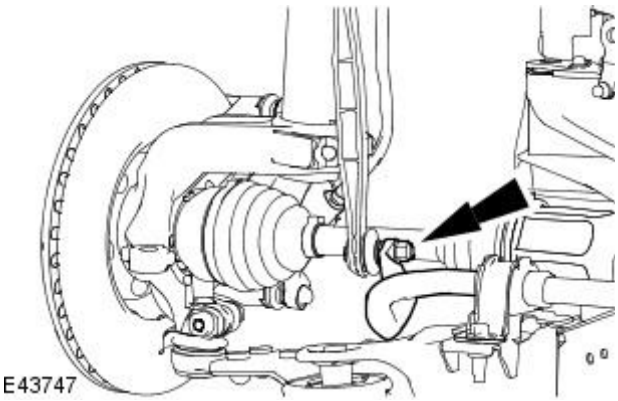

27. Install a new right-hand anti-roll bar link retaining nut.

- Tighten to 48 Nm.

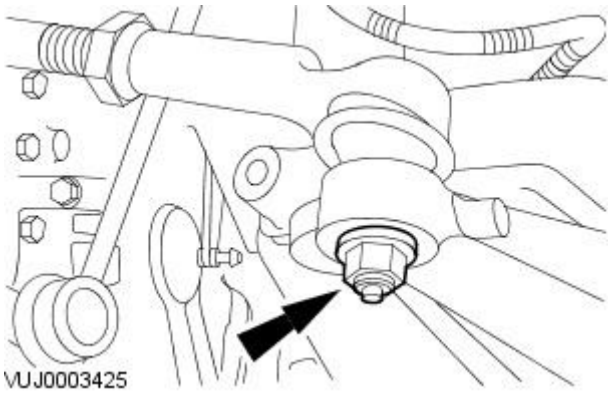

28. Install a new right-hand tie rod-end retaining nut.

- Tighten to 35 Nm.

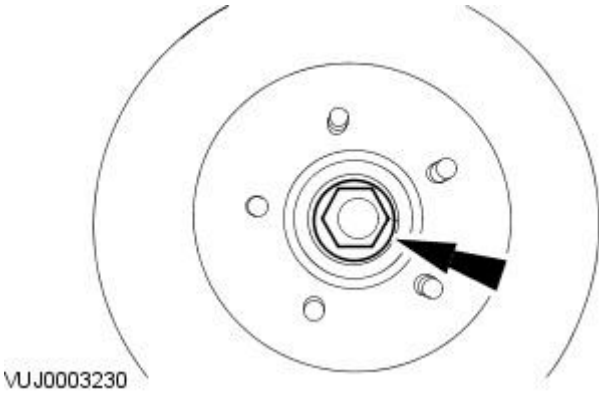

29. Loosely install a new wheel right-hand hub nut.

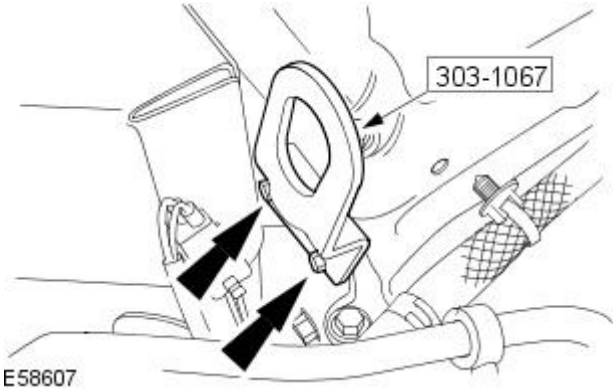

30. Remove the engine rear lifting eye.

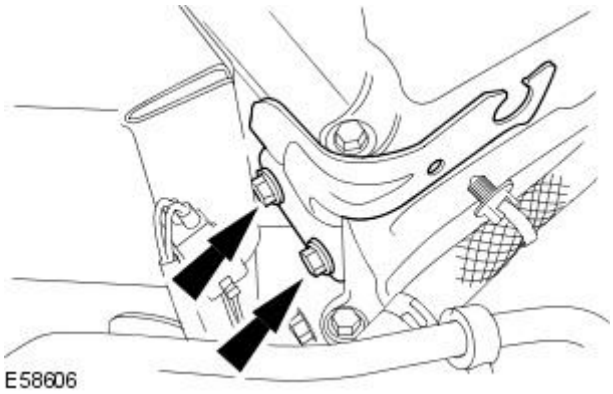

31. Install the engine cover rear mount bracket.

- Tighten to 23 Nm.

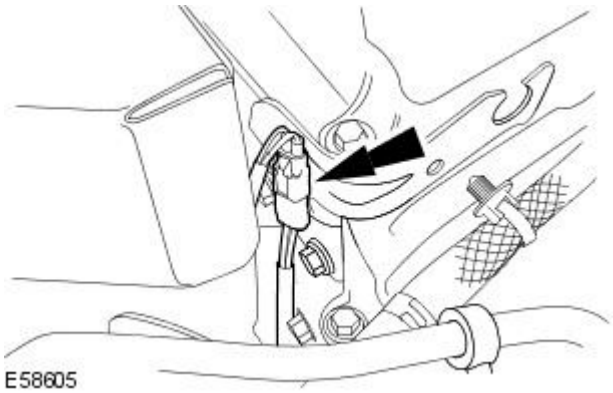

32. Attach the electrical connector.

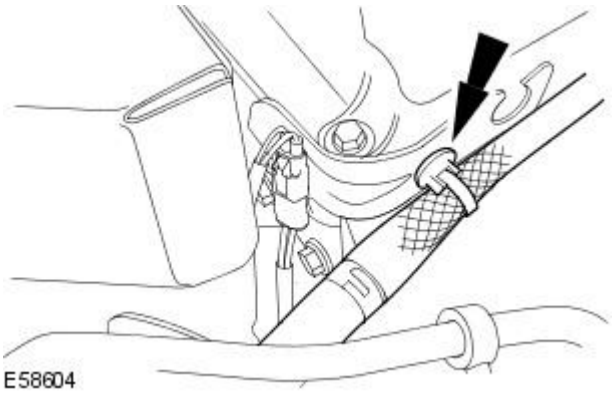

33. Attach the engine harness.

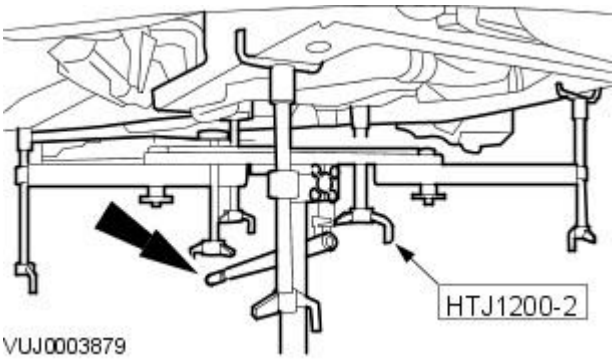

34. Raise the engine, suspension and transmission assembly to a suitable height.

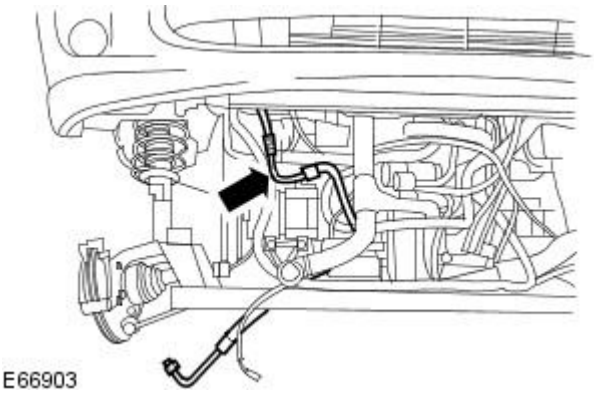

35. NOTE: Remove the tie straps.

Reposition the air conditioning (A/C) pipe to the engine, suspension and transmission assembly.

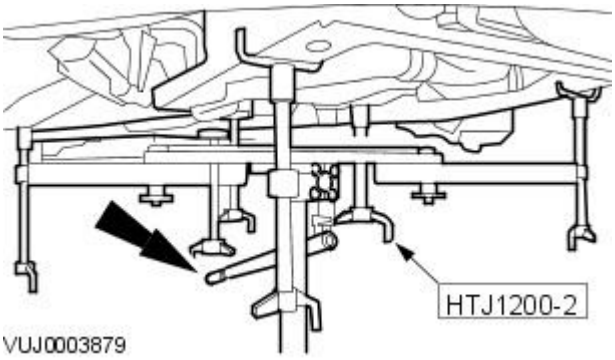

36. WARNING: Raise the special tool platform slowly. Failure to follow this instruction can result in personal injury.

Install the engine.

- Raise the special tool.

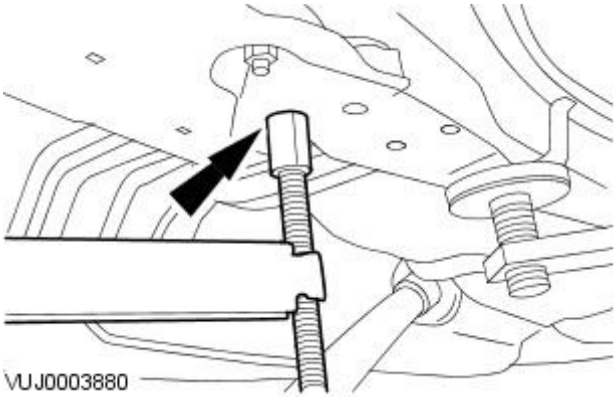

37. NOTE: Left-hand shown, right-hand similar.

Make sure the special tool rear height adjuster aligns into the locating hole in the vehicle floor pan.

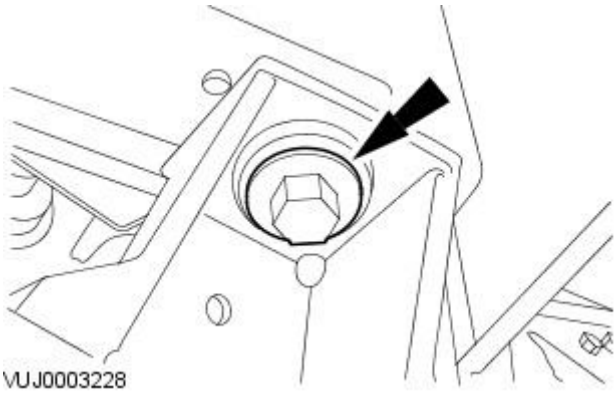

38. NOTE: Left-hand shown, right-hand similar.

Loosely install the front subframe retaining bolts.

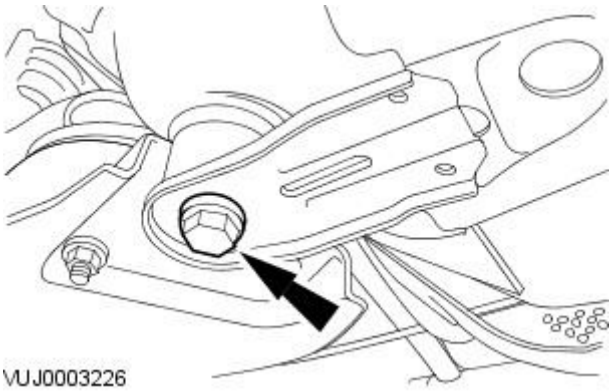

39. NOTE: Left-hand shown, right-hand similar.

Install the front subframe reinforcement plate.

- Loosely install the front subframe rear retaining bolts.

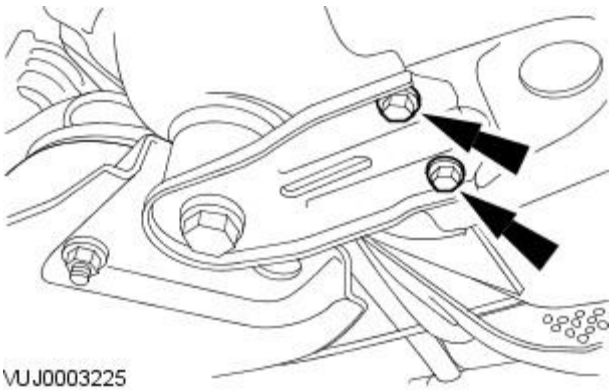

40. NOTE: Left-hand shown, right-hand similar.

Install the front subframe reinforcement plate retaining bolts.

- Tighten to 70 Nm.

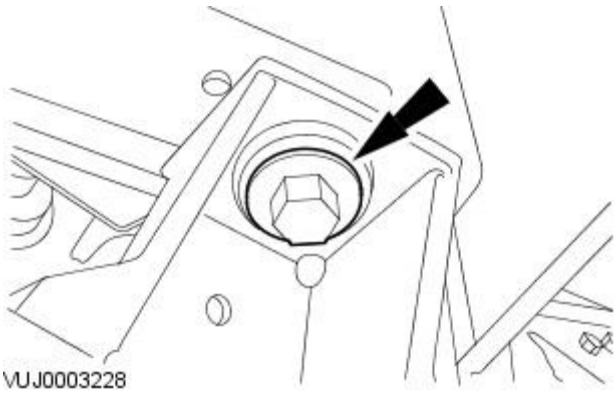

41. NOTE: Left-hand shown, right-hand similar.

Fully tighten the front subframe retaining bolts.

- Tighten to 142 Nm.

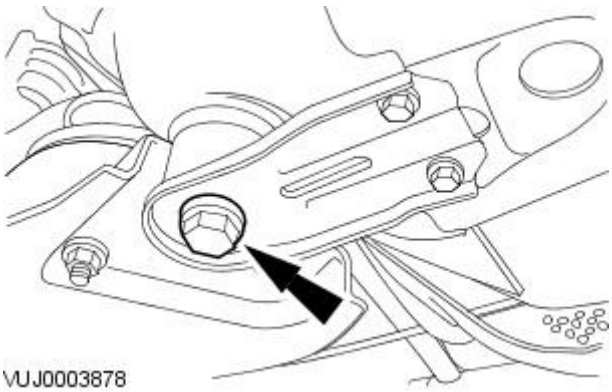

42. NOTE: Left-hand shown, right-hand similar.

Fully tighten the front subframe retaining bolts.

- Tighten to 142 Nm.

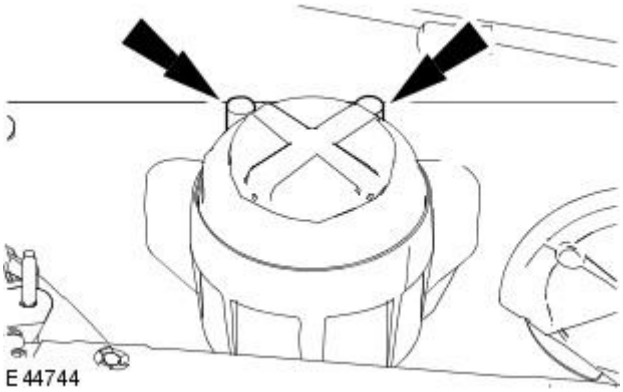

43. NOTE: Install new retaining nuts.

Install the engine front mount retaining nuts.

- Tighten to 80 Nm.

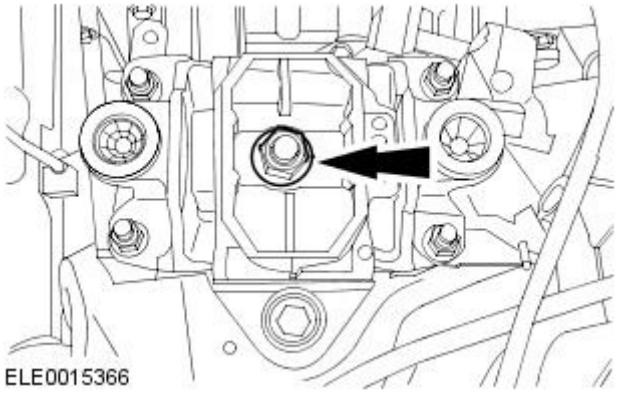

44. NOTE: Install a new retaining nut.

Install the engine rear mount retaining nut.

- Tighten to 133 Nm.

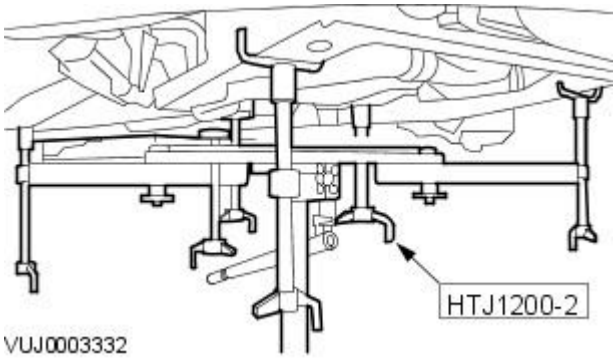

45. Remove the special tool.

46. Lower the vehicle.

47. Attach the strut and spring assembly.

- Tighten to 30 Nm.

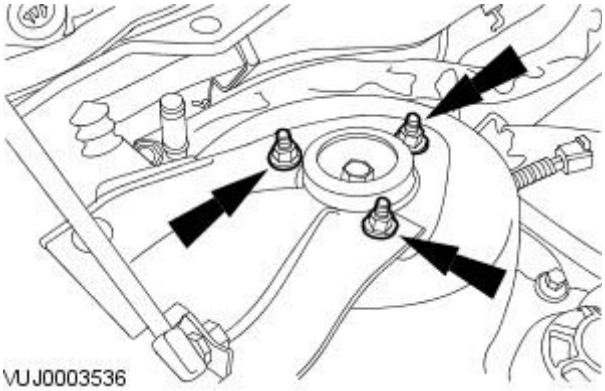

48. NOTE: Remove the tie straps.

Attach the selector cables.

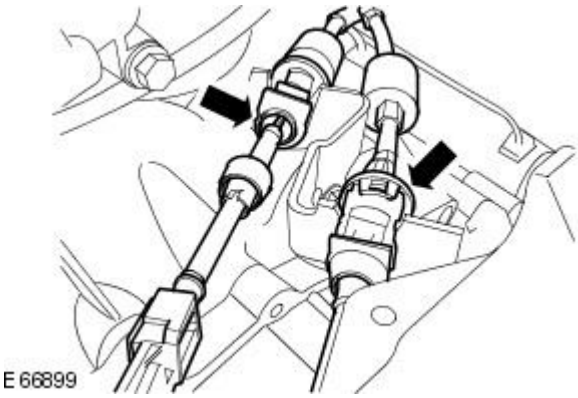

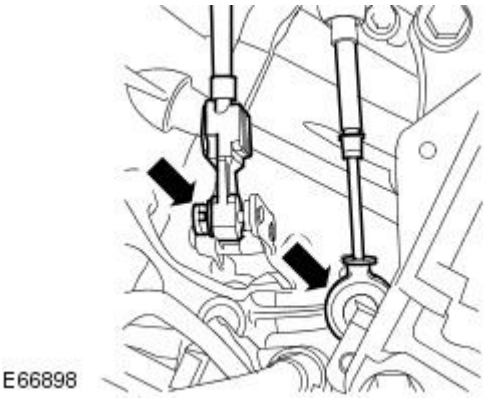

49. Attach the selector cables.

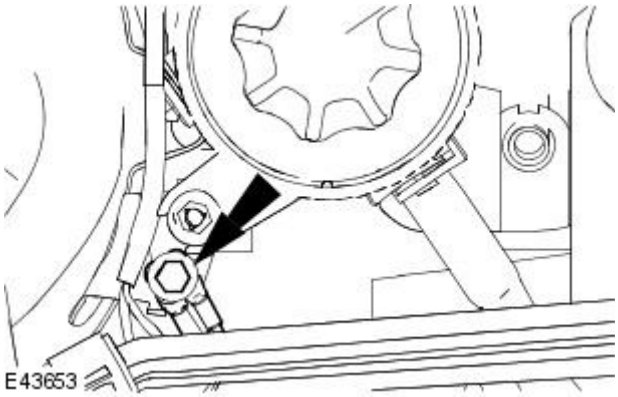

50. Attach the engine wiring harness earth lead.

- Tighten to 10 Nm.

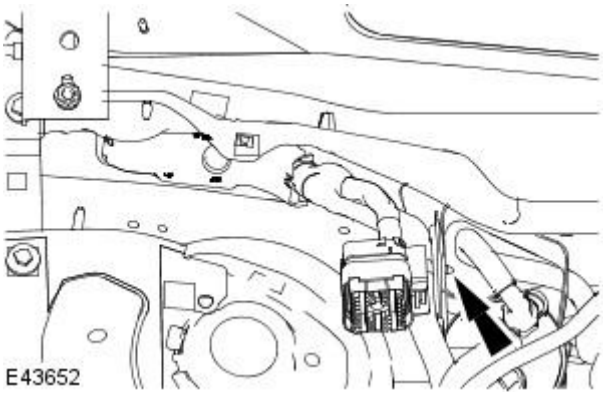

51. Attach the engine wiring harness retaining clip.

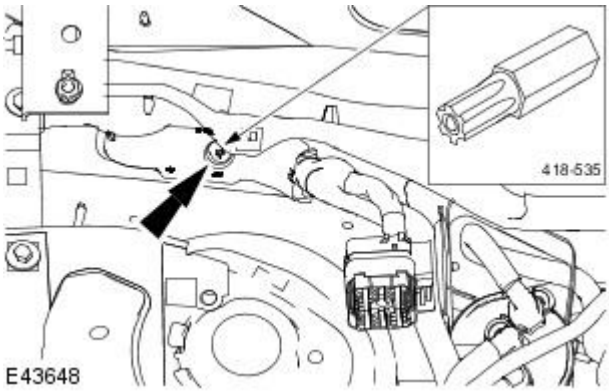

52. CAUTION: Make sure that the electrical connector locates correctly in the ECM. Do not force or overtighten the electrical connector. Failure to follow this instruction may result in damage to the components.

• NOTE: Bolt remains captive in the ECM electrical connector.

Using the special tool, connect the ECM harness electrical connector.

- Tighten to 10 Nm.

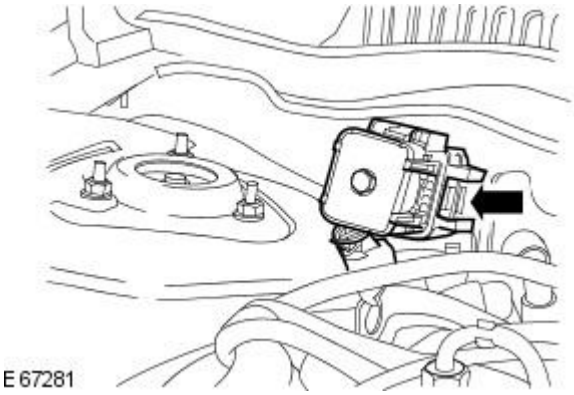

53. Attach the engine wiring harness electrical connector.

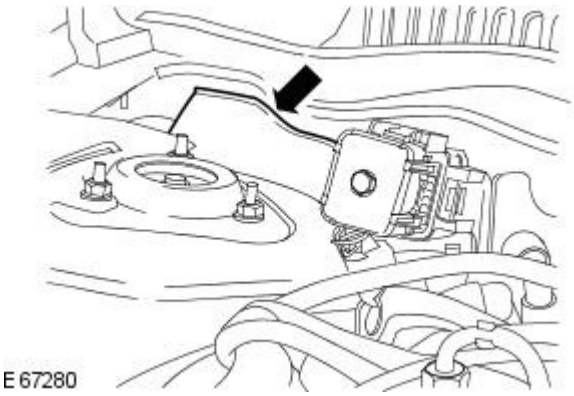

54. Install the engine wiring harness trim panel.

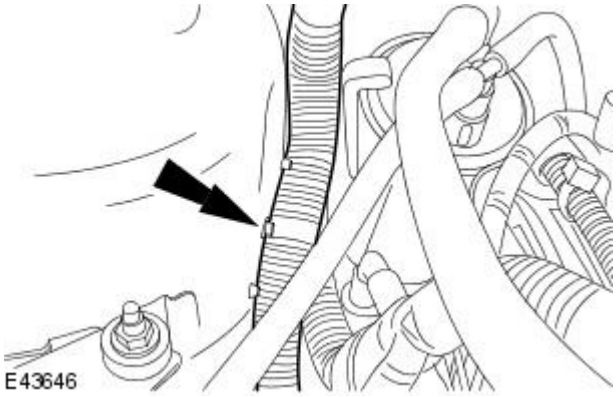

55. Attach the engine wiring harness retaining clip.

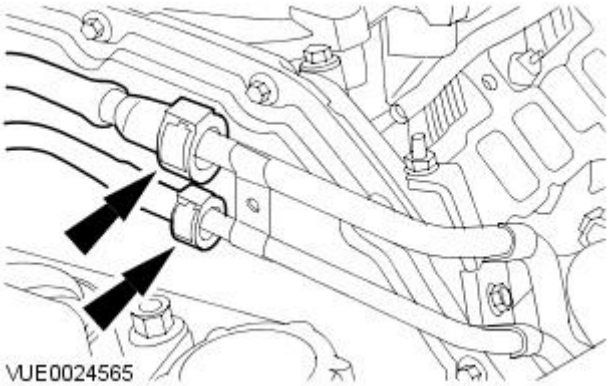

56. Connect the fuel lines.
For additional information, refer to: Quick Release Coupling - Push Connect (310-00 Fuel System - General Information, General Procedures).

- Remove the blanking plugs.

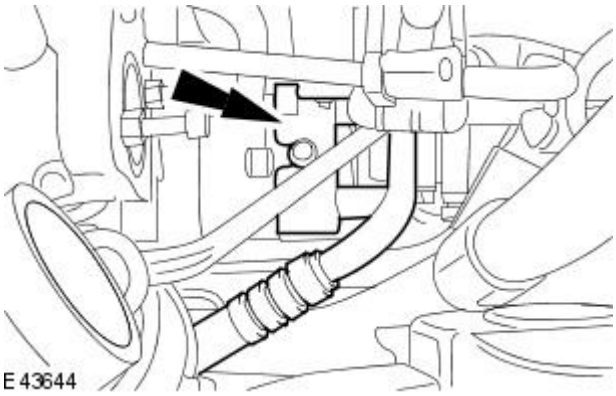

57. NOTE: Install new O-ring seals.

• NOTE: Un-cap the exposed ports.

Connect the air conditioning (A/C) compressor lines.

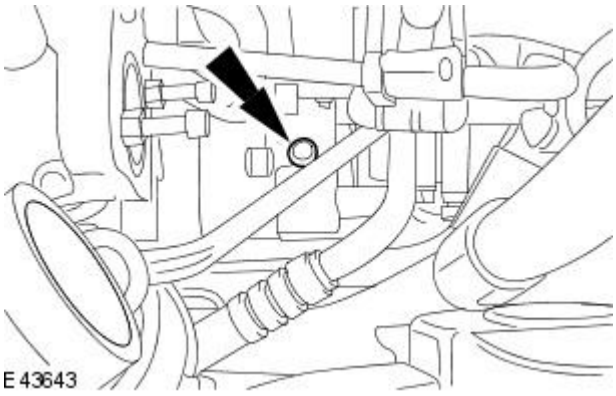

58. Fully tighten the A/C compressor line retaining bolt.

- Tighten to 20 Nm.

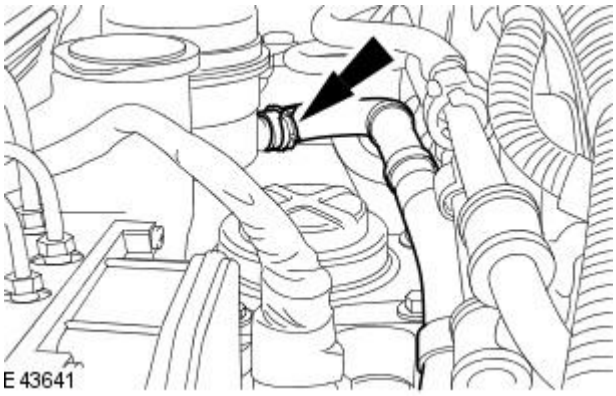

59. Connect the power assisted steering hose.

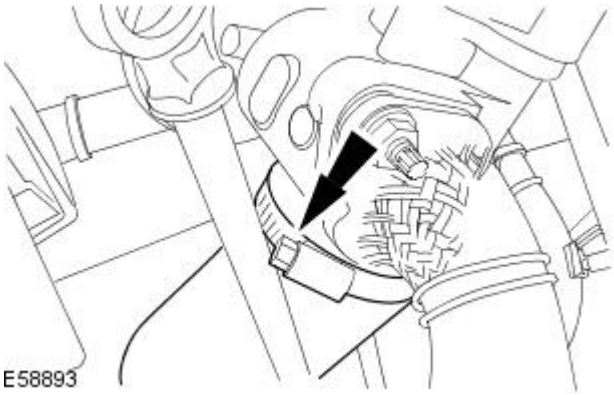

60. Connect the charge air cooler hose.

- Tighten to 4 Nm.

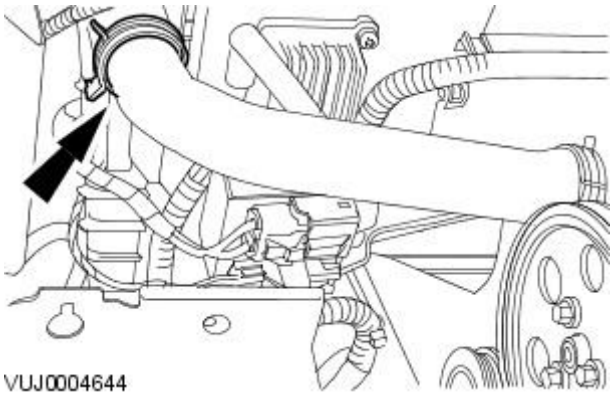

61. Connect the radiator upper coolant hose.

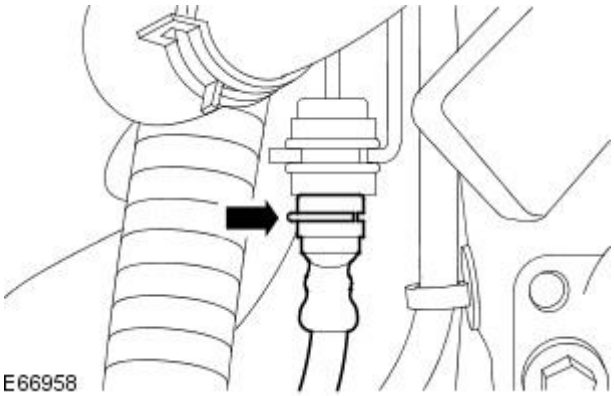

62. CAUTION: If brake fluid is spilt on the paintwork, the affected area must be immediately washed down with cold water.

• NOTE: Un-cap the exposed ports.

• NOTE: Remove the tie strap.

Attach the clutch slave cylinder pipe.

- Connect and fully seat the clutch slave cylinder pipe and retaining clip.

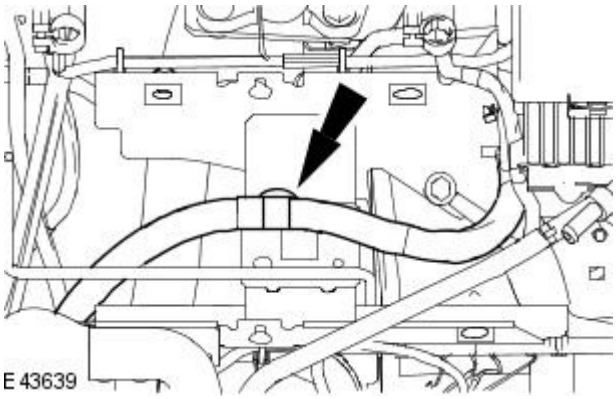

63. Attach the wiring harness to the battery tray mount.

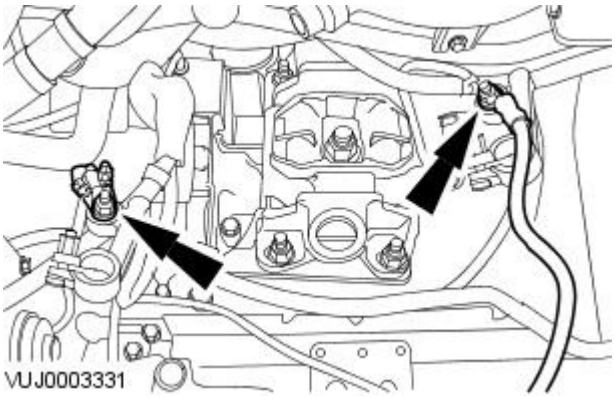

64. Connect the battery cables.

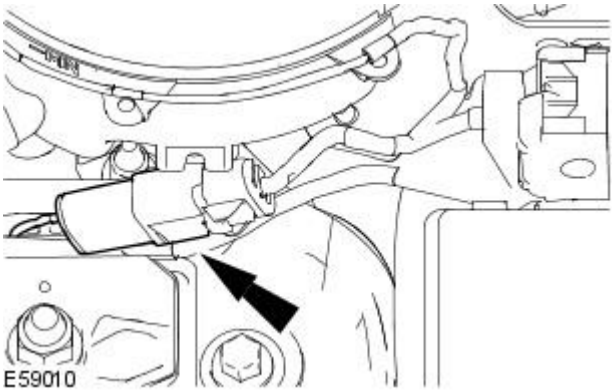

65. Connect the glow plug harness electrical connector.

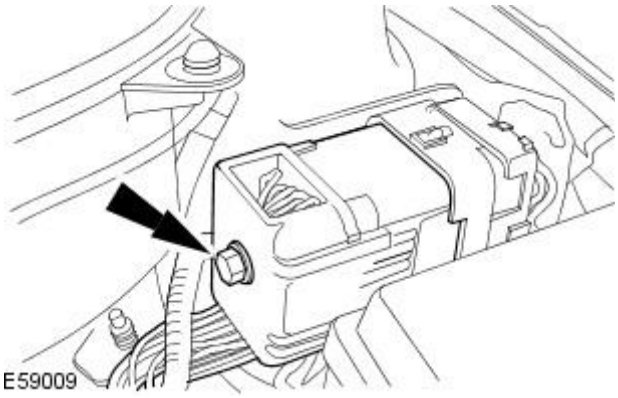

66. Connect the engine harness electrical connector.

- Tighten to 10 Nm.

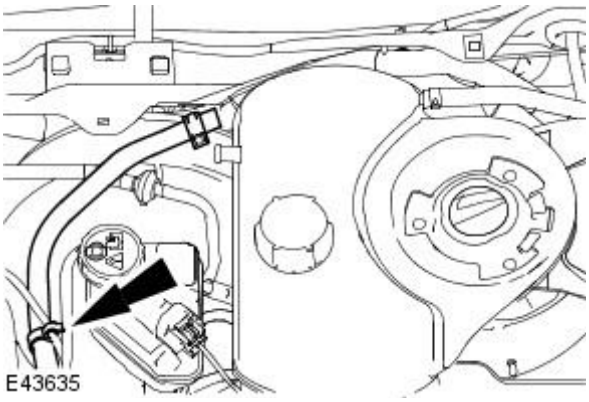

67. Attach the the expansion tank outlet hose.

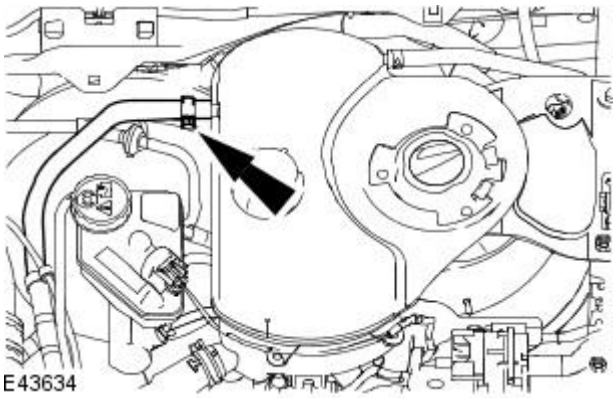

68. Connect the expansion tank outlet hose.

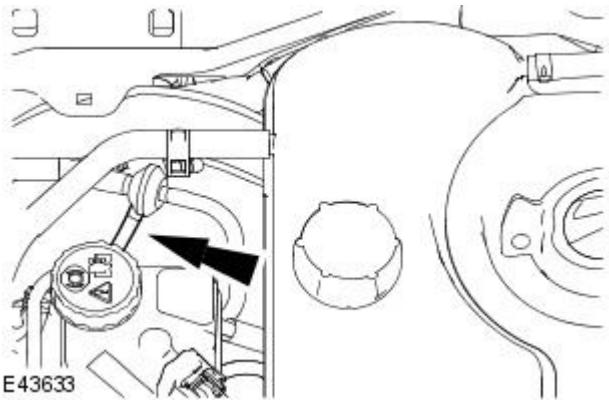

69. Connect the exhaust gas recirculation (EGR) valve module vacuum hose.

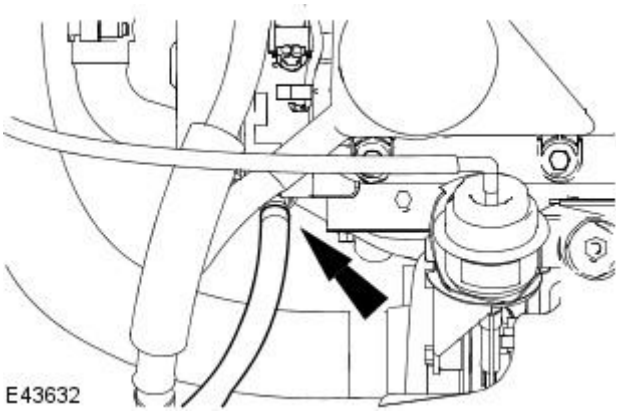

70. Connect the brake vacuum pump vacuum hose.

71. Raise the vehicle.

72. NOTE: Un-cap the exposed ports.

- NOTE: Use care when repositioning power assisted steering hose.

Connect the power assisted steering hose.

- Reposition the power assisted hose through the radiator side seal.
- Install the power assisted steering hose retaining clip.

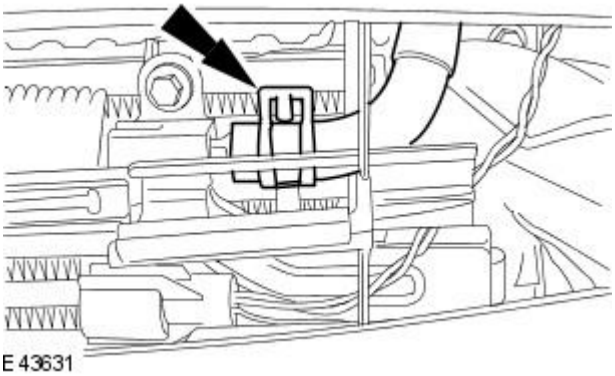

73. Attach the battery breather hose.

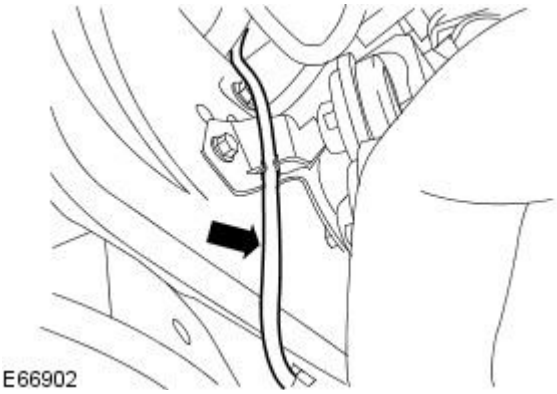

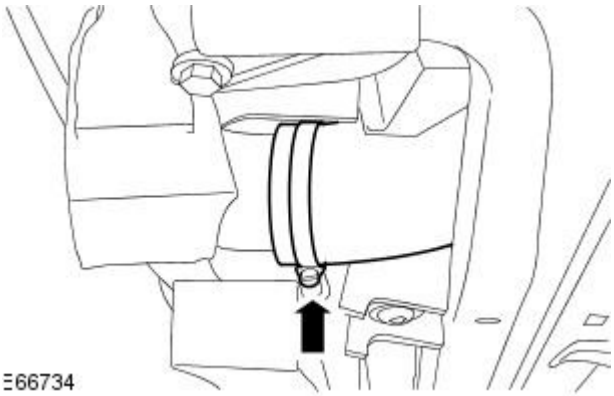

74. Attach the charge air cooler outlet hose to the charge air cooler.

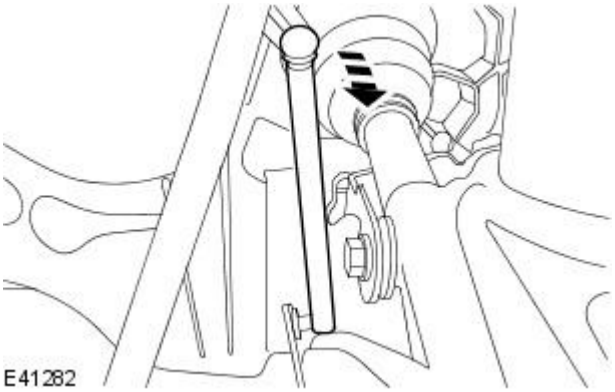

75. Connect the high intensity discharge (HID) sensor drop arm.

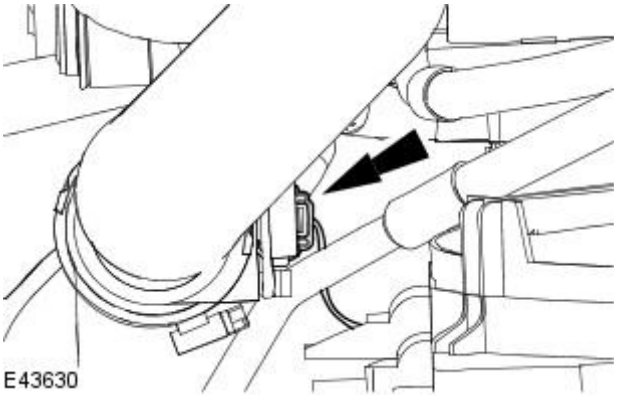

76. Connect the air temperature sensor electrical connector.

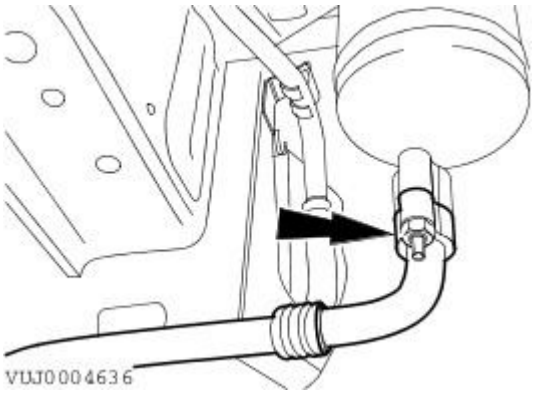

77. NOTE: Install a new O-ring seal.

- NOTE: Un-cap the exposed ports.

Connect the suction accumulator pipe.

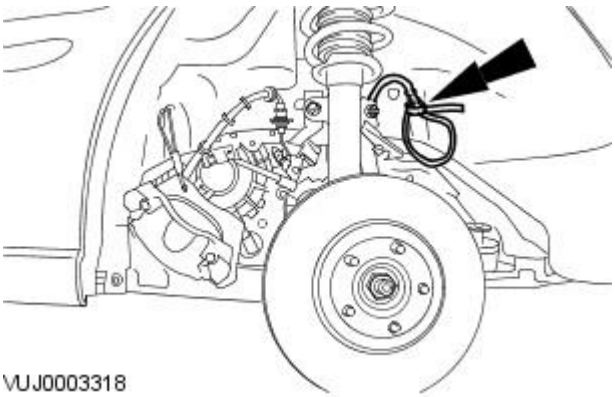

78. NOTE: Remove the anti-lock braking system (ABS) wheel speed sensor tie straps.

- NOTE: Left-hand shown, right-hand similar.
- NOTE: Remove the tie strap.

Detach and reposition the ABS wheel speed sensor.

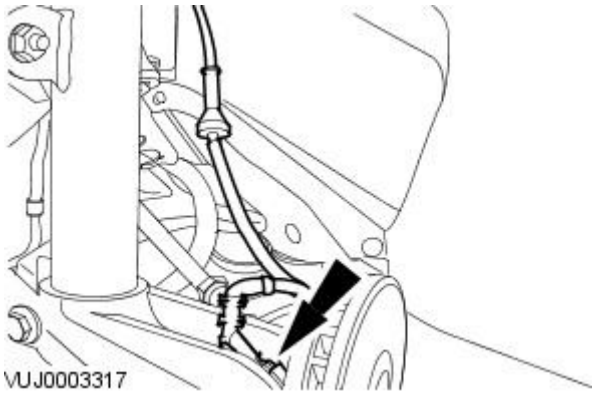

79. NOTE: Left-hand shown, right-hand similar.

Connect the ABS wheel speed sensor.

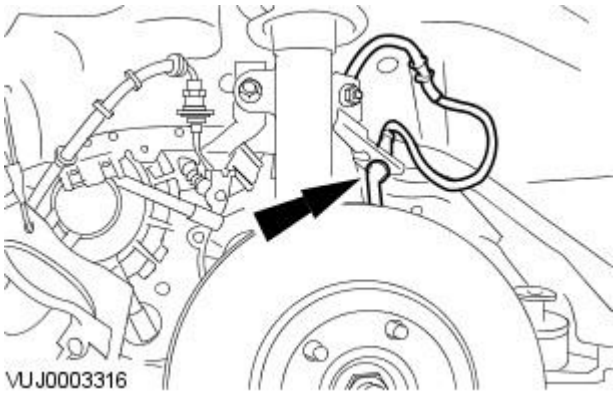

80. NOTE: Left-hand shown, right-hand similar.

Attach the ABS wheel speed sensor.

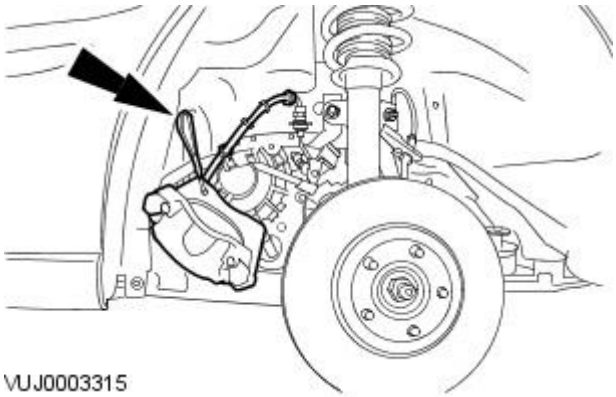

81. NOTE: Remove the brake caliper assembly tie straps.

- NOTE: Left-hand shown, right-hand similar.

Detach and reposition the brake caliper assembly.

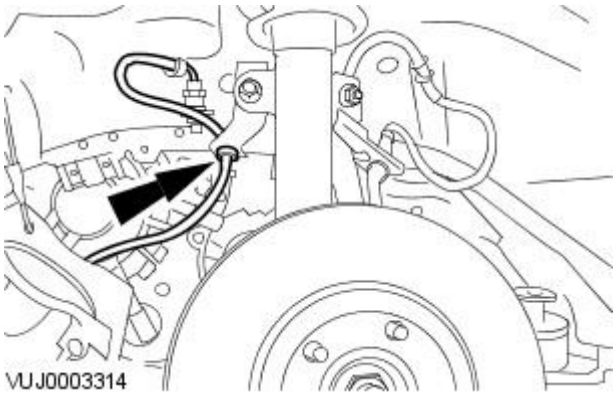

82. NOTE: Left-hand shown, right-hand similar.

Attach the brake pipe.

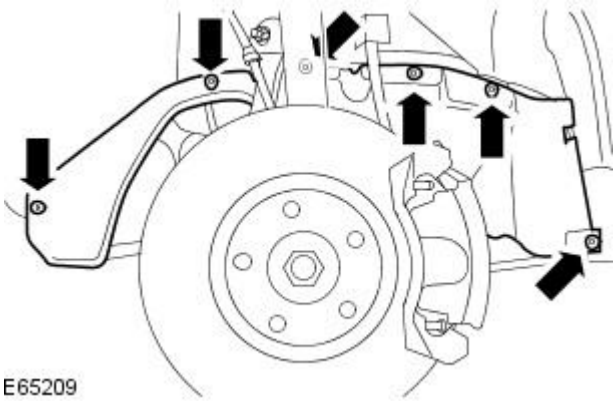

83. NOTE: Right-hand shown, left-hand similar.

Install the wheel arch liner access cover.

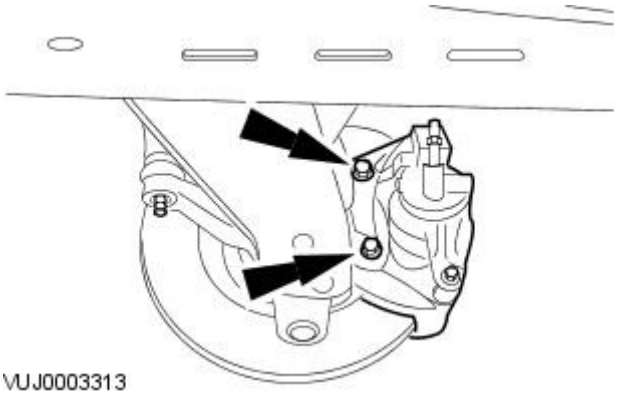

84. NOTE: Left-hand shown, right-hand similar.

• NOTE: Install new brake caliper anchor plate retaining bolts.

Attach the brake caliper and brake caliper anchor plate assembly.

- Tighten to 133 Nm.

85. Install the front brake pads.
For additional information, refer to: Brake Pads (206-03 Front Disc Brake, Removal and Installation).

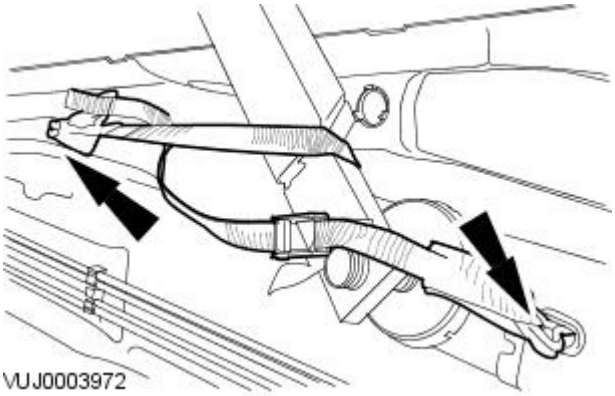

86. NOTE: Right-hand shown, left-hand similar.

Remove the rear vehicle tie down strap.

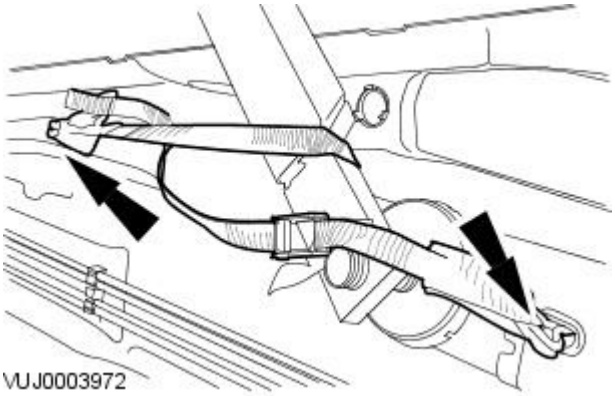

87. NOTE: Right-hand shown, left-hand similar.

Remove the front vehicle tie down strap.

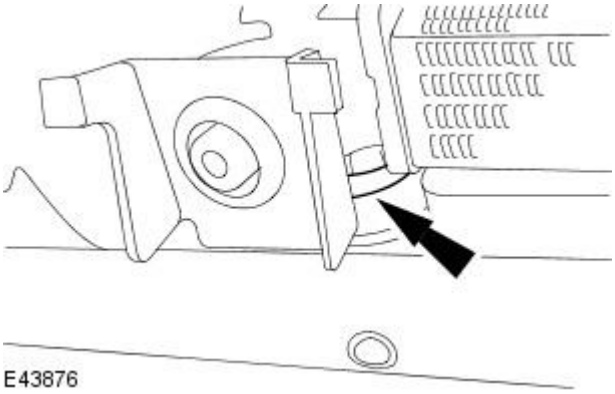

88. Connect the radiator lower coolant hose.

Vehicles with fuel fired booster heater

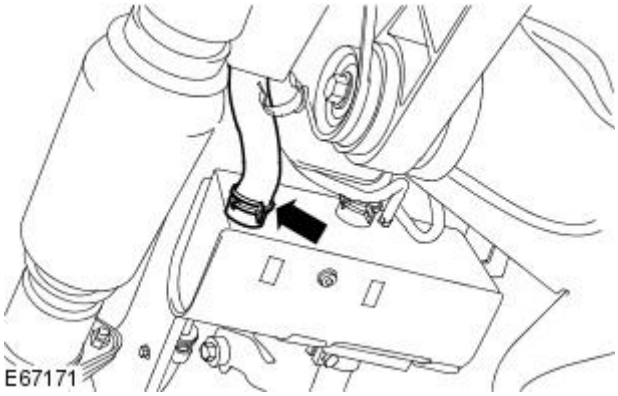

89. Connect the coolant hose.

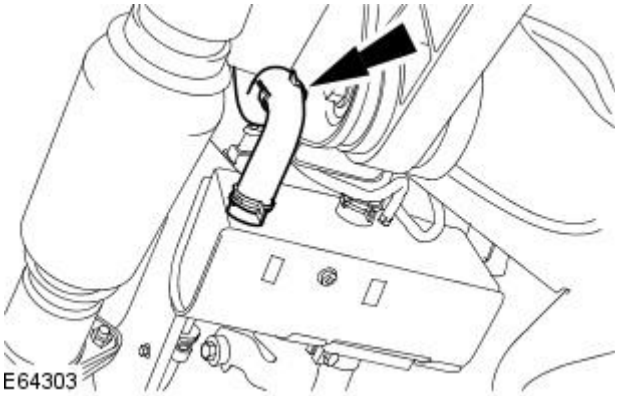

90. Attach the coolant hose.

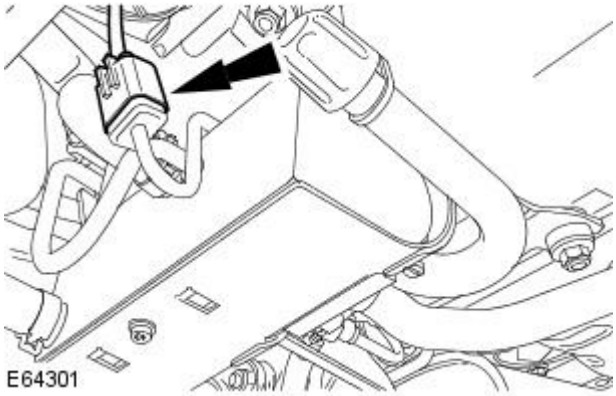

91. Connect the fuel fired booster heater electrical connector to the subframe retaining tang.

Vehicles without electric booster heater

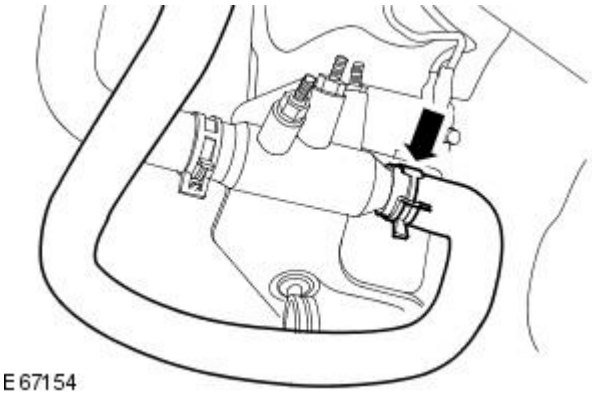

92. Attach the coolant hose.

- Connect the coolant hose.

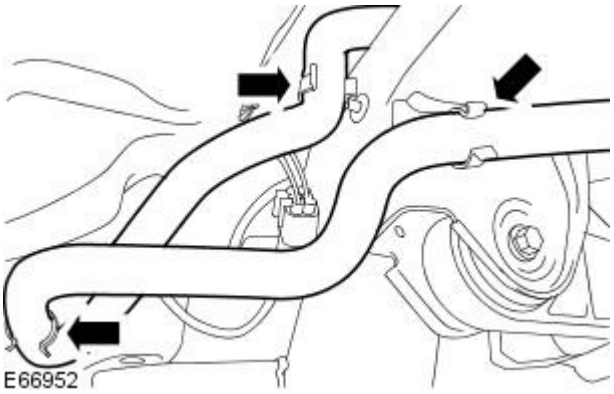

93. Attach the coolant hoses to the retaining clips.

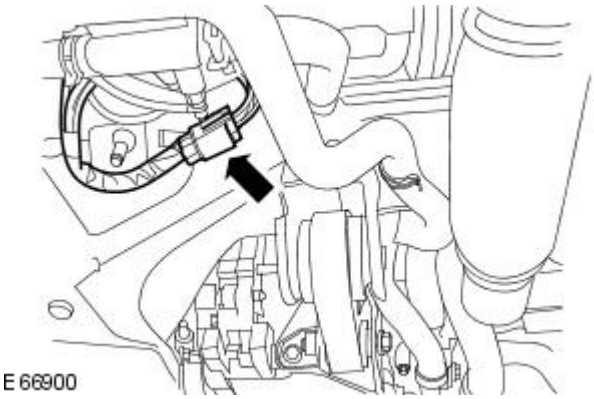

94. Attach the electric booster heater electrical connector to the subframe retaining tang.

Vehicles without auxiliary heating

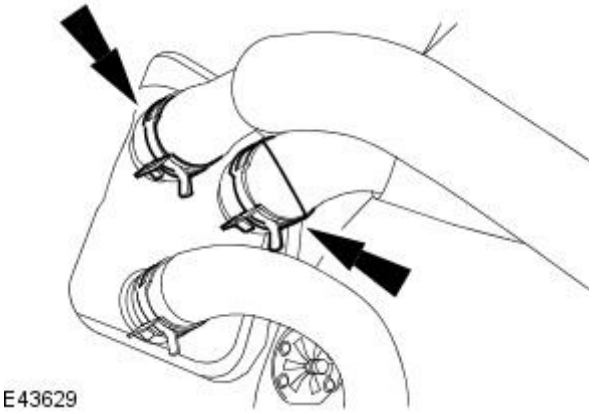

95. Connect the heater hoses to the heater core.

All vehicles

96. Install the exhaust flexible pipe.
For additional information, refer to: Exhaust Flexible Pipe - 2.0L Duratorq-TDCi/2.2L Duratorq-TDCi (110kW/150PS) - Puma (309-00 Exhaust System, Removal and Installation).

97. Install the battery tray.
For additional information, refer to: Battery Tray (414-01 Battery, Mounting and Cables, Removal and Installation).

98. Check and top up the transmission fluid level.
For additional information, refer to: Transaxle Draining and Filling - Vehicles With: 5-Speed Manual Transmission - MT75 (308-03 Manual Transmission/Transaxle, General Procedures).

99. Carry out the clutch bleeding system procedure.
For additional information, refer to: Clutch System Bleeding - Vehicles With: 5-Speed Manual Transmission - MT75 (308-00 Manual Transmission/Transaxle and Clutch - General Information, General Procedures).

100. Fill and bleed the cooling system.
For additional information, refer to: Cooling System Draining, Filling and Bleeding (303-03B Engine Cooling - 2.0L Duratorq-TDCi/2.2L Duratorq-TDCi (110kW/150PS) - Puma, General Procedures).

101. Recharge the air conditioning refrigerant.
For additional information, refer to: Air Conditioning (A/C) System Recovery, Evacuation and Charging (412-00 Climate Control System - General Information, General Procedures).

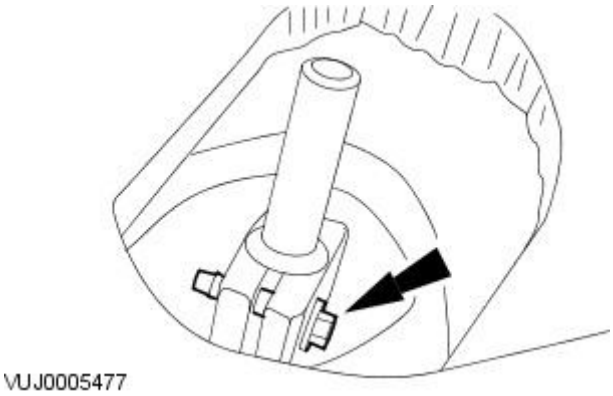

102. Install the steering column coupling.

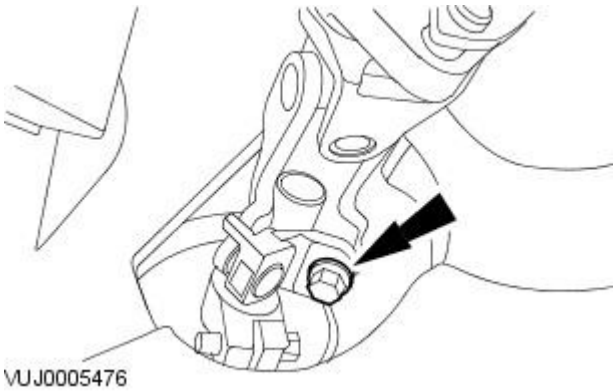

103. Attach the lower steering column shaft.

- Install a new retaining bolt.
- Tighten to 25 Nm.

104. Bleed the power steering system.
For additional information, refer to: Power Steering System Filling (211-00 Steering System - General Information, General Procedures).

105. Carry out the gear shift cable adjustment procedure.
For additional information, refer to: Gearshift Cable Adjustment (308-00 Manual Transmission/Transaxle and Clutch - General Information, General Procedures).

106. Carry out the underbody misalignment check.
For additional information, refer to: Underbody Misalignment Check (502-00 Uni-Body, Subframe and Mounting System, General Procedures).

Published: 11-May-2011

Engine Cooling - 2.0L NA V6 - AJV6 / 2.5L NA V6 - AJV6 / 3.0L NA V6 - AJ27 -

Fluids and Lubricants

Description	Specification
Jaguar Premium Cooling System Fluid	ESE-M97B44-A
Premium Cooling System Flush	EGR-M14P7-A
O-Ring Lubricant	ESE-M99B176-A

Cooling System Refill Capacities

Engine	Capacity
2.5/3.0L	8.25L

Torque Specifications

Description	Nm	lb-ft	lb-in
Air conditioning condenser retaining bolts	7	-	62
Block heater	40	30	-
Coolant expansion tank retaining bolt	3	-	27
Cooling fan motor control module retaining screws	2	-	18
Cooling fan motor retaining nuts	6	-	53
Engine block drain plug	40	30	-
Radiator drain plug	1	-	9
Radiator support beam retaining bolts	25	18	-
Thermostat housing retaining bolts	10	-	89
Water pump housing retaining bolts	10	-	89
Water pump to water pump housing retaining bolts	10	-	89
Water pump drive pulley retaining bolts	11	8	-
Water pump housing inlet pipe retaining nuts	9	-	80
Water pump housing inlet pipe retaining studs	12	9	-
Water pump housing outlet pipe retaining bolts	10	-	89

Engine Cooling - 2.0L NA V6 - AJV6 / 2.5L NA V6 - AJV6 / 3.0L NA V6 - AJ27 - Engine Cooling

Description and Operation

Cooling Module Components

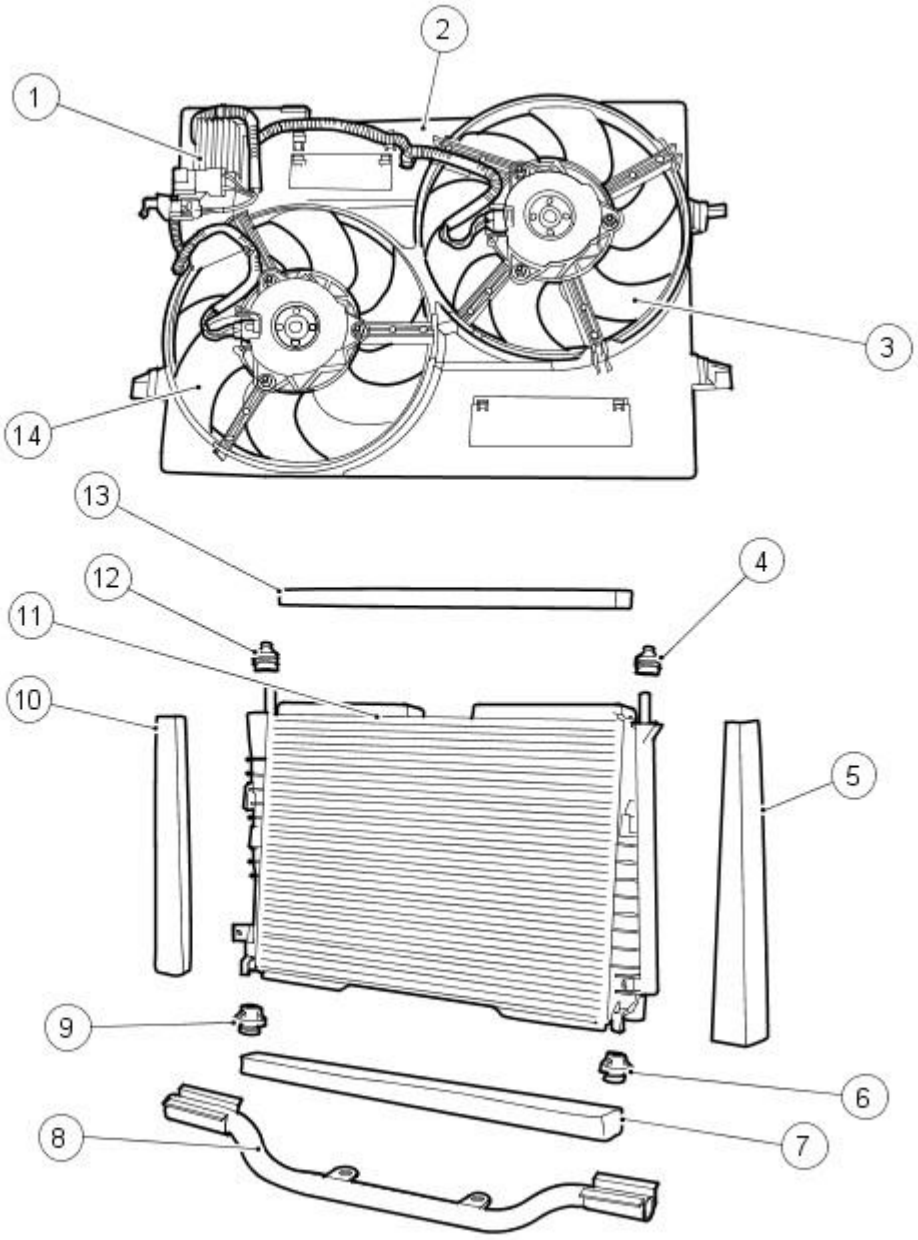

VUJ0004066

Item	Part Number	Description
1	—	Cooling fan motor control module
2	—	Cooling fan shroud
3	—	Cooling fan, R/H
4	—	Radiator upper isolator mounting
5	—	Radiator side seal
6	—	Radiator lower isolator mounting
7	—	Radiator lower seal
8	—	Radiator support beam
9	—	Radiator lower isolator mounting
10	—	Radiator side seal
11	—	Radiator
12	—	Radiator upper isolator mounting
13	—	Radiator upper seal
14	—	Cooling fan, L/H

Engine Cooling System Components

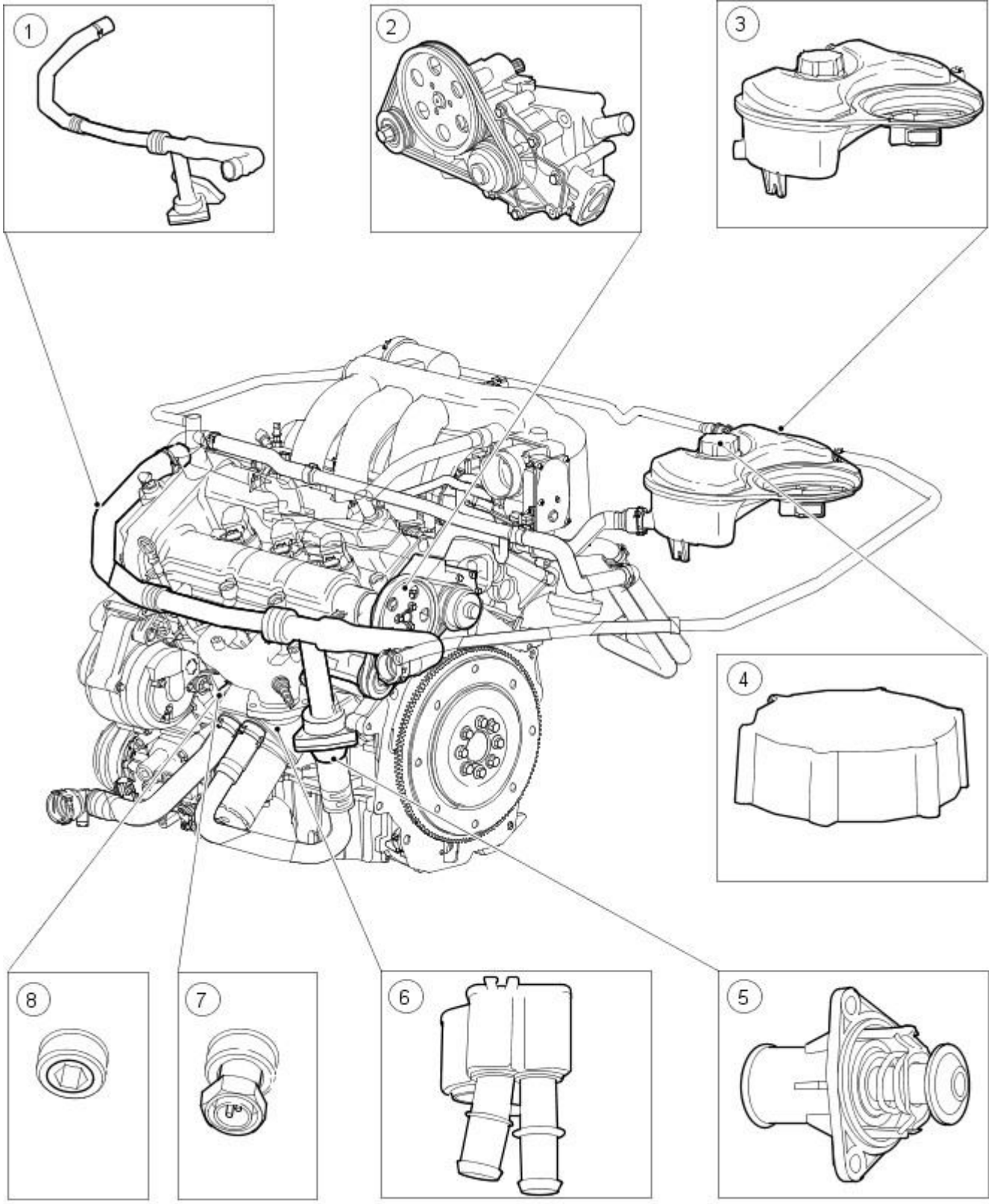

VUJ0004061

Item	Part Number	Description
1	—	Upper coolant hose
2	—	Water pump
3	—	Coolant expansion tank
4	—	Coolant pressure cap
5	—	Thermostat
6	—	Engine oil cooler
7	—	Engine block heater (cold climate market vehicles only)
8	—	Engine block drain plug

• WARNINGS:

Never remove the coolant pressure cap under any circumstances while the engine is operating. Failure to follow this instruction may result in personal injury.

To avoid having scalding hot coolant or steam blow out of the cooling system, use extreme care when removing the coolant pressure cap from a hot cooling system. Wait until the engine has cooled, then wrap a thick cloth around the coolant pressure cap and turn it slowly until the pressure begins to release. Step back while the pressure is released from the system. When certain all the pressure has been released (still with a cloth) turn and remove the coolant pressure cap from the coolant expansion tank. Failure to follow these instructions may result in personal injury.

To avoid the possibility of personal injury, do not operate the engine with the hood open until the fan blades have been examined for cracks and separation. Failure to follow this instruction may result in personal injury.

Remove fuse 37 from the engine compartment fuse box prior to performing any under hood service in the area of the cooling fans when the engine is hot, since the cooling fan motors could operate if the engine has been switched OFF. Failure to follow this instruction may result in personal injury.

• CAUTIONS:

The engine cooling system must be maintained with the correct concentration and type of anti-freeze solution to prevent corrosion and frost damage.

Never remove the coolant pressure cap under any circumstances while the engine is operating. Failure to follow this instruction may result in damage to the engine.

The cooling system consists of the following:

- Water pump.
- Thermostat.
- Radiator.
- Coolant expansion tank.
- Coolant pressure cap.
- Two electric cooling fans.
- Cooling fan motor control module.
- Engine oil cooler.

Water Pump

The water pump is of a conventional design and is located at the rear of the engine. It is driven by the L/H exhaust camshaft through the water pump drive pulley and belt. The water pump belt tension is maintained by an automatic drive belt tensioner. For additional information, refer to Section 303-05 Accessory Drive.

Thermostat

The thermostat is located in a housing in the upper coolant hose and allows rapid engine warm-up by restricting coolant flow through the radiator below 82°C (180°F). The thermostat also assists in keeping the engine operating temperature within predetermined limits. The thermostat begins to open at 82°C (180°F) and is fully open at 93°C (199°F).

When the engine is cold and the thermostat is closed, coolant flows from the water pump through the engine. It then returns to the water pump through the upper coolant hose.

When the engine is warm and the thermostat is open, coolant flows into the radiator through the upper coolant hose. It then returns to the water pump from the radiator through the lower coolant hose and engine oil cooler.

The heater core is on a parallel circuit and is unaffected by the position of the thermostat.

Radiator

The radiator is of aluminium construction with plastic end tanks. Foam seals are fitted to the radiator to prevent the cooling air from by passing the radiator core. The radiator is located by four isolator mountings and supported by the radiator support beam. A coolant drain plug is provided in the lower coolant hose for the draining of the coolant. The Cooling fan shroud is attached to the radiator.

Cooling Fans

Two variable speed electric cooling fans are housed in the cooling fan shroud for the cooling of the radiator. The speed of the electric cooling fans are adjusted by the cooling fan motor control module, which is controlled by the engine control module (ECM).

The ECM determines the cooling fan speed by receiving inputs from the engine coolant temperature (ECT) sensor and the dual automatic temperature control module (DATC). The ECM sends a variable pulse width modulated (PWM) signal to the fan motor control module to operate the cooling fans at the required speed. The cooling fans are operated at slow speed when the engine coolant temperature is at 95°C (203°F) and are operated at full speed when the engine coolant temperature is at 105°C (221°F). A coolant temperature between these temperatures will cause the cooling fans to be operated at a speed which is proportional to the engine coolant temperature.

When the engine is running with the ECT above 100°C (212°F), if the ignition switch is turned to the OFF position the cooling fans will continue to operate for a time which is determined by the ECM.

If the PWM signal from the ECM to the cooling fan control module is between 7% and 95% the cooling fan control module will operate the cooling fans at the required speed. If the PWM signal from the ECM to the cooling fan control module is below 3% and above 95% the cooling fan control module will operate the cooling fans at maximum speed. If the PWM signal from the ECM to the cooling fan control module is between 3% and 7% the cooling fans will not be operated.

Engine Block Heater

For vehicle markets subject to very cold climate conditions, an engine block heater for connection to an external mains power supply, is fitted in place of the engine block drain plug.

Coolant Recovery System

A pressurized coolant expansion tank system is used which continuously separates the air from the cooling system and replenishes the system through the coolant expansion tank outlet hose, attached to the heater return hose.

A continuous vent from the engine and radiator to the coolant expansion tank prevents air locks from forming in the cooling system.

No manual bleed points are provided on the system.

The coolant expansion tank serves as the location for:

- Service fill.

- Coolant expansion during warm-up.
- Air separation during operation.
- System pressurization by the coolant pressure cap.
- The coolant expansion tank is designed to have approximately 0.5 to 1 liter of air when cold to allow for coolant expansion.

Engine Oil Cooler

The engine oil cooler is a Modine oil to water type. The oil cooler is fitted between the oil filter housing and the oil filter and is a full flow system.

The coolant supply for the engine oil cooler is through the radiator bottom hose.

Coolant Flow Diagram (Thermostat open)

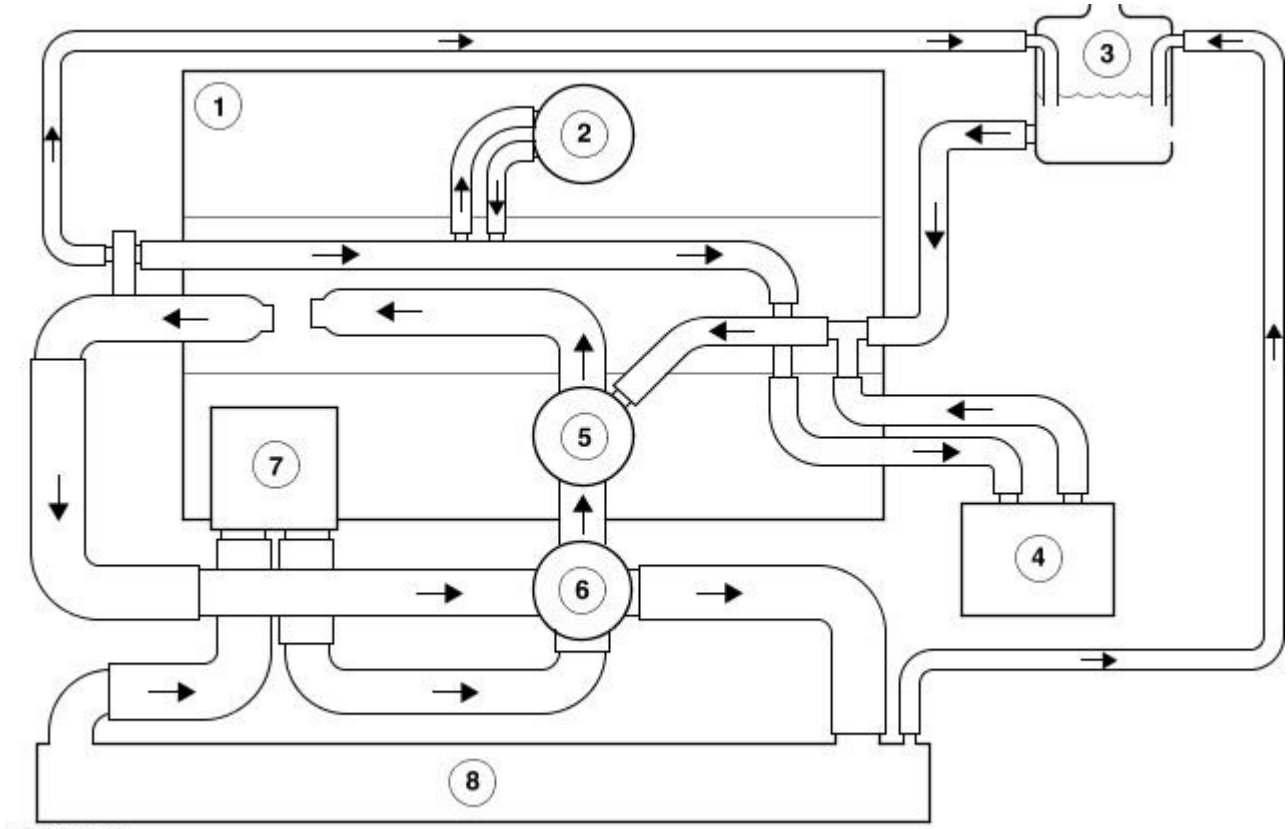

VUJ0004060

Item	Part Number	Description
1	—	Engine
2	—	Throttle body
3	—	Expansion tank
4	—	Heater core
5	—	Water pump
6	—	Thermostat
7	—	Engine oil cooler
8	—	Radiator

Engine Coolant

The long life engine coolant is formulated to last for five years or 240,000 km (150,000 miles). The coolant is silicate free and orange in color. The long life engine coolant must not be mixed with conventional engine coolant.

Engine Cooling - 2.0L NA V6 - AJV6 / 2.5L NA V6 - AJV6 / 3.0L NA V6 - AJ27 - Engine Cooling

Diagnosis and Testing

1. **1.** Verify the customer concern.
2. **2.** If an obvious cause for an observed or reported concern is found, correct the cause (if possible) before proceeding to the next step.
3. **3.** Visually inspect for obvious signs of mechanical or electrical damage.
4. **4.** If the concern is not an electrical fault and is not visually evident, verify the concern and refer to the symptom chart.
5. **5.** If the concern is an electrical fault and is not visually evident, use a fault code reader to retrieve the fault codes before proceeding to the symptom chart.

Visual Inspection Chart

Mechanical	Electrical
Leaks	Fuse
Coolant expansion tank	Wiring harness
Coolant pressure cap	Loose or corroded connector(s)
Cooling fan motor(s)	Cooling fan motor(s)
Radiator	Engine coolant temperature (ECT) sensor
Water pump	Cooling fan motor control module
-	Block heater

Symptom chart

Symptom	Possible Sources	Action
DTC P0480; High/low signal from the cooling fan motor control module to the engine control module (ECM)	* Fuse F40 (80A), power distribution fuse box. * Circuit. * Cooling fan motor. * Cooling fan motor control module. * ECM.	* GO to Pinpoint Test A.
Loss of coolant	* Hoses. * Hose connections. * Radiator. * Water pump. * Heater core. * Gaskets. * Coolant expansion tank. * Coolant pressure cap. * Engine casting cracks. * Engine core plugs.	* Go to Pinpoint Test B.
Engine overheats	* Engine coolant. * Thermostat. * Fuse F40 (80A), power distribution fuse box. * Circuit. * Cooling fan motor(s). * Radiator. * Water pump. * Water pump drive belt. * Engine coolant temperature (ECT) sensor. * ECM. * Cooling fan motor control module.	* Go to Pinpoint Test C.
Engine block heater does not operate properly	* Block heater power cable. * Block heater.	* Go to Pinpoint Test D.
The engine does not reach normal operating temperature	* Thermostat.	* INSTALL a new thermostat.

PINPOINT TEST A : DTC P0480; HIGH/LOW SIGNAL FROM THE COOLING FAN MOTOR CONTROL MODULE TO THE ECM

TEST CONDITIONS	DETAILS/RESULTS/ACTIONS
A1: CHECK THE OPERATION OF THE COOLING FANS	
	1 Disconnect the engine coolant temperature sensor electrical connector.
	2 Connect a 100 ohm resistor to the engine coolant temperature sensor electrical connector.
	3 START and RUN the engine.
	Are the cooling fans operating? **Yes** GO to A2. . **No** GO to A7. .
A2: CHECK THE OPERATION OF THE TWO COOLING FANS	
	1 Inspect the operation of the two cooling fans.
	Are both the cooling fans operating? **Yes** Connect the engine coolant temperature sensor electrical connector.GO to A4. . **No** GO to A3. .
A3: RUN THE TWO COOLING FANS AT MAXIMUM SPEED.	
	1 Turn the ignition switch to the OFF position and disconnect the cooling fan control module electrical connector JB187 (to VIN E71957) and connector JB190 (from VIN 71958).
	2 Remove the PWM signal wire from the cooling fan control module electrical connector JB187-1 (WU) (to VIN E71957) and connector JB190-4 (WU) (from VIN 71958).

	3 Connect the cooling fan control module electrical connector JB187 (to VIN E71957) and connector JB190 (from VIN 71958) and turn the ignition switch to the RUN position. The cooling fans will run at maximum speed.
	4 Allow the cooling fans to run for 5 minutes. Turn the ignition switch to the OFF position and disconnect the cooling fan control module electrical connector JB187 (to VIN E71957) and connector JB190 (from VIN 71958).
	5 Install the PWM signal wire to the cooling fan control module electrical connector JB187-1 (WU) (to VIN E71957) and connector JB190-4 (WU) (from VIN 71958).
	6 Connect the cooling fan control module electrical connector JB187 (to VIN E71957) and connector JB190 (from VIN 71958) to the cooling fan control module.
	7 Turn the ignition switch to the RUN position.
	Are both the cooling fans operating? **Yes** Connect the engine coolant temperature sensor electrical connector.GO to A4. . **No** INSTALL a new cooling fan motor as necessary. For additional information, refer to REFER to: Cooling Fan Motor (303-03A Engine Cooling - 2.0L NA V6 - AJV6/2.5L NA V6 - AJV6/3.0L NA V6 - AJ27, Removal and Installation). . CLEAR the DTC. TEST the system for normal operation.
A4: CHECK CONTINUITY OF THE COOLING FAN MOTOR CONTROL MODULE SIGNAL WIRE FROM THE ECM	
	1 Turn the ignition switch to the OFF position.
	2 Disconnect the ECM electrical connector EN16 and the cooling fan motor control module electrical connector JB187 (to VIN E71957) and connector JB190 (from VIN 71958).
	3 Measure the resistance between electrical **connector (JB187-1 to VIN E71957) or connector (JB190-4 from VIN 71958)** and EN16-51.
	Is the resistance less than 5 ohms? **Yes** GO to A5. . **No** REPAIR the circuit from the ECM to the cooling fan motor control module. CLEAR the DTC. TEST the system for normal operation.
A5: CHECK THE COOLING FAN MOTOR CONTROL MODULE SIGNAL WIRE FROM THE ECM FOR A SHORT TO GROUND	
	1 Measure the resistance between **connector (JB187-1 to VIN E71957) or connector (JB190-4 from VIN 71958)** and ground.
	Is the resistance less than 10,000 ohms? **Yes** GO to A6. . **No** REPAIR the circuit from the ECM to the cooling fan motor control module. CLEAR the DTC. TEST the system for normal operation.
A6: CHECK THE COOLING FAN MOTOR CONTROL MODULE SIGNAL WIRE FROM THE ECM FOR A SHORT TO BATTERY POSITIVE	
	1 Measure the resistance between JB187-1 and JB187-2 (to VIN E71957) or JB190-4 and JB190-3 (from VIN 71958).
	Is the resistance less than 10,000 ohms? **Yes** INSTALL a new cooling fan motor control module. For additional information, refer to REFER to: Cooling Fan Module (303-03A Engine Cooling - 2.0L NA V6 - AJV6/2.5L NA V6 - AJV6/3.0L NA V6 - AJ27, Removal and Installation). . CLEAR the DTC. TEST the system for normal operation. If the DTC is repeated, INSTALL a new ECM. For additional information, refer to REFER to: Electronic Engine Controls (303-14A Electronic Engine Controls - 2.0L NA V6 - AJV6/2.5L NA V6 - AJV6/3.0L NA V6 - AJ27, Description and Operation). . **No** REPAIR the circuit from the ECM to the cooling fan motor control module. CLEAR the DTC. TEST the system for normal operation.
A7: CHECK FUSE F40 IN THE POWER DISTRIBUTION FUSE BOX	
	1 Check the fuse.
	Is the fuse OK? **Yes** GO to A9. . **No** GO to A8. .
A8: CHECK FUSE F40 OF THE POWER DISTRIBUTION FUSE BOX FOR A SHORT TO GROUND	
	1 Measure the resistance between electrical connector JB212-1 of the power distribution fuse box and ground.
	Is the resistance less than 10,000 ohms? **Yes** REPAIR short to ground between the engine compartment fuse box and the cooling fan motor control module. INSTALL a new fuse. CLEAR the DTC. TEST the system for normal operation. **No** INSTALL a new fuse. CLEAR the DTC. TEST the system for normal operation.
A9: CHECK THE POWER SUPPLY TO THE COOLING FAN MOTOR CONTROL MODULE	
	1 Measure the voltage between the cooling fan motor control module electrical connector JB212-1 and ground.
	Is the voltage less than 10 volts? **Yes** GO to A10. . **No** GO to A11. .
A10: CHECK FOR BATTERY VOLTAGE AT FUSE F40 OF THE ENGINE COMPARTMENT FUSE BOX	
	1 Measure the voltage between the engine compartment fuse box electrical connector JB212-1 and ground
	Is the voltage less than 10 volts? **Yes** Repair the circuit between engine compartment fuse box and the battery. CLEAR the DTC. TEST the system for normal operation. **No** REPAIR the circuit between the engine compartment fuse box and the cooling fan motor control module. CLEAR the DTC. TEST the system for normal operation.
A11: CHECK THE IGNITION SUPPLY TO THE COOLING FAN MOTOR CONTROL MODULE	
	1 Turn the ignition switch to the RUN position.
	2 Measure the voltage between the cooling fan motor control module electrical connector (JB187-2 to VIN E71957) or connector (JB190-3 from VIN 71958) and ground.

	Is the voltage less than 10 volts? **Yes** REPAIR the circuit between the engine compartment fuse box and the cooling fan motor control module. CLEAR the DTC. TEST the system for normal operation. **No** GO to A12. .
A12: CHECK THE COOLING FAN MOTOR CONTROL MODULE GROUND CIRCUIT	
	1 Measure the resistance between the cooling fan motor control module electrical connector (JB188-2 to VIN E71957) or connector (JB190-2 from VIN 71958) and ground.
	Is the resistance less than 5 ohms? **Yes** INSTALL a new cooling fan motor control module. For additional information, refer to REFER to: Cooling Fan Module (303-03A Engine Cooling - 2.0L NA V6 - AJV6/2.5L NA V6 - AJV6/3.0L NA V6 - AJ27, Removal and Installation). . CLEAR the DTC. TEST the system for normal operation. If the DTC is repeated, INSTALL a new ECM. For additional information, refer to REFER to: Electronic Engine Controls (303-14A Electronic Engine Controls - 2.0L NA V6 - AJV6/2.5L NA V6 - AJV6/3.0L NA V6 - AJ27, Description and Operation). . **No** REPAIR the ground circuit to the cooling fan motor control module. CLEAR the DTC. TEST the system for normal operation.

PINPOINT TEST B : LOSS OF COOLANT

TEST CONDITIONS	DETAILS/RESULTS/ACTIONS
B1: VISUAL INSPECTION	
	1 Visually inspect for loss of coolant.
	Is the engine cooling system leaking? **Yes** INSTALL a new component as required. For additional information, refer to the appropriate section. TEST the cooling system for normal operation. **No** Carry out the Cooling System Pressure TEST. For additional information, refer to the component test in this section.

PINPOINT TEST C : THE ENGINE OVERHEATS

TEST CONDITIONS	DETAILS/RESULTS/ACTIONS
C1: CHECK COOLANT	
WARNING: Never remove the coolant pressure cap under any circumstances while the engine is operating. Failure to follow this instruction may result in personal injury. To avoid having scalding hot coolant or steam blow out of the cooling system, use extreme care when removing the coolant pressure cap from a hot cooling system. Wait until the engine has cooled, then wrap a thick cloth around the coolant pressure cap and turn it slowly until the pressure begins to release. Step back while the pressure is released from the system. When certain all the pressure has been released (still with a cloth) turn and remove the coolant pressure cap from the coolant expansion tank. Failure to follow these instructions may result in personal injury.	
CAUTION: Never remove the coolant pressure cap under any circumstances while the engine is operating. Failure to follow this instruction may result in personal damage to the engine.	
	1 Inspect the coolant level.
	Is the coolant level OK? **Yes** GO to C2. . **No** DIAGNOSE and REPAIR the coolant leaks. REFILL the cooling system. For additional information, refer to REFER to: Cooling System Draining, Filling and Bleeding (303-03A Engine Cooling - 2.0L NA V6 - AJV6/2.5L NA V6 - AJV6/3.0L NA V6 - AJ27, General Procedures). . TEST the cooling system for normal operation.
C2: CHECK THE CONDITION OF THE WATER PUMP DRIVE BELT	
	1 Inspect the water pump drive belt. For additional information, refer to REFER to: Water Pump Belt - 2.0L NA V6 - AJV6/2.5L NA V6 - AJV6/3.0L NA V6 - AJ27 (303-05 Accessory Drive, Removal and Installation). .
	Is the water pump drive belt OK? **Yes** GO to C3. . **No** INSTALL a new water pump drive belt. For additional information, refer to REFER to: Water Pump Belt - 2.0L NA V6 - AJV6/2.5L NA V6 - AJV6/3.0L NA V6 - AJ27 (303-05 Accessory Drive, Removal and Installation). . TEST the cooling system for normal operation.
C3: CHECK THE WATER PUMP DRIVE	
	1 Remove the water pump drive belt. For additional information, refer to REFER to: Water Pump Belt - 2.0L NA V6 - AJV6/2.5L NA V6 - AJV6/3.0L NA V6 - AJ27 (303-05 Accessory Drive, Removal and Installation). .
	2 Attempt to turn the water pump drive pulley by hand.
	Does the water pump drive pulley turn? **Yes** GO to C4. . **No** GO to C5. .
C4: CHECK THE LEFT HAND EXHAUST CAMSHAFT	
	1 Remove the water pump. For additional information, refer to REFER to: Water Pump (303-03A Engine Cooling - 2.0L NA V6 - AJV6/2.5L NA V6 - AJV6/3.0L NA V6 - AJ27, Removal and Installation). .
	2 Inspect the water pump drive shaft splines of the exhaust camshaft.

	Are the drive splines OK? **Yes** Install a new water pump. For additional information, refer to REFER to: Water Pump (303-03A Engine Cooling - 2.0L NA V6 - AJV6/2.5L NA V6 - AJV6/3.0L NA V6 - AJ27, Removal and Installation). . TEST the system for normal operation. **No** INSTALL a new camshaft. For additional information, refer to REFER to: Camshafts LH (303-01A Engine - 2.0L NA V6 - AJV6/2.5L NA V6 - AJV6/3.0L NA V6 - AJ27, In-vehicle Repair). . Install a new water pump. For additional information, refer to REFER to: Water Pump (303-03A Engine Cooling - 2.0L NA V6 - AJV6/2.5L NA V6 - AJV6/3.0L NA V6 - AJ27, Removal and Installation). . TEST the system for normal operation.
C5: CHECK THE OPERATION OF THE COOLING FANS	
	1 Disconnect the engine coolant temperature (ECT) sensor electrical connector.
	2 Connect a 100 ohm resistor to the engine coolant temperature sensor electrical connector.
	3 Turn the ignition switch to the RUN position.
	Are the cooling fans operating? **Yes** Turn the ignition switch to the OFF position. Connect the ECT sensor. GO to C7. . **No** Turn the ignition switch to the OFF position. Connect the ECT sensor. GO to A1. .
C6: CHECK THE AIR CONDITIONING CONDENSER AND RADIATOR CORE FOR OBSTRUCTION.	
	1 INSPECT the air conditioning condenser and radiator core for obstruction.
	Is the air conditioning condenser or radiator core obstructed? **Yes** Remove the obstruction and clean the air conditioning condenser and radiator core. TEST the system for normal operation. **No** GO to C8. .
C7: CHECK THE OPERATION OF THE COOLING FANS WITH THE ENGINE RUNNING AT NORMAL OPERATING TEMPERATURE	
	1 START and RUN the engine until the ECT is between 95°C (203°F) and 105°C (221°F).
	Are the cooling fans operating? **Yes** Turn the ignition switch to the OFF position. GO to C8. . **No** DIAGNOSE the electronic engine controls. For additional information, refer to REFER to: Electronic Engine Controls - 2.5L NA V6 - AJV6/3.0L NA V6 - AJ27, VIN Range: E96603->J28492 (303-14A Electronic Engine Controls - 2.0L NA V6 - AJV6/2.5L NA V6 - AJV6/3.0L NA V6 - AJ27, Diagnosis and Testing). .
C8: CHECK THE TEMPERATURE OF THE RADIATOR	
	1 Check the radiator core temperature.
	Is the radiator core hot? **Yes** GO to C9. . **No** GO to C10. .
C9: CHECK THE RADIATOR CORE FOR COLD SPOTS	
	1 Check the radiator core for cold spots.
	Does the radiator core have any cold spots? **Yes** Backflush the radiator. For additional information, refer to REFER to: Cooling System Backflushing (303-03A Engine Cooling - 2.0L NA V6 - AJV6/2.5L NA V6 - AJV6/3.0L NA V6 - AJ27, General Procedures). . TEST the system for normal operation. If the fault is still present, INSTALL a new radiator. For additional information, refer to REFER to: Radiator (303-03A Engine Cooling - 2.0L NA V6 - AJV6/2.5L NA V6 - AJV6/3.0L NA V6 - AJ27, Removal and Installation). . **No** GO to C10. .
C10: CHECK THE THERMOSTAT	
	1 TEST the thermostat. For additional information, refer to the component TEST in this section.
	Is the thermostat OK? **Yes** GO to C11. . **No** INSTALL a new thermostat. For additional information, refer to REFER to: Thermostat (303-03A Engine Cooling - 2.0L NA V6 - AJV6/2.5L NA V6 - AJV6/3.0L NA V6 - AJ27, Removal and Installation). . TEST the system for normal operation.
C11: CHECK THE ENGINE OIL COOLER FOR A BLOCKAGE	
	1 Remove the engine oil cooler. For additional information, refer to REFER to: Oil Cooler (303-01A Engine - 2.0L NA V6 - AJV6/2.5L NA V6 - AJV6/3.0L NA V6 - AJ27, In-vehicle Repair). .
	2 Check the engine oil cooler for a coolant blockage.
	Is the engine oil cooler blocked? **Yes** Install a new engine oil cooler. For additional information, refer to REFER to: Oil Cooler (303-01A Engine - 2.0L NA V6 - AJV6/2.5L NA V6 - AJV6/3.0L NA V6 - AJ27, In-vehicle Repair). . TEST the system for normal operation. **No** INSTALL a new water pump. For additional information, refer to REFER to: Water Pump (303-03A Engine Cooling - 2.0L NA V6 - AJV6/2.5L NA V6 - AJV6/3.0L NA V6 - AJ27, Removal and Installation).

	. TEST the system for normal operation.

PINPOINT TEST D : THE ENGINE BLOCK HEATER DOES NOT OPERATE	
TEST CONDITIONS	**DETAILS/RESULTS/ACTIONS**
D1: CHECK CONTINUITY OF THE BLOCK HEATER POWER SUPPLY CABLE AND THE BLOCK HEATER	
	1 Measure the resistance between the live supply terminal and the negative terminal of the block heater power supply connector.
	Is the resistance less than 20 ohms? **Yes** Repair the mains power supply to the vehicle block heater cable. TEST the system for normal operation. **No** GO to D2. .
D2: CHECK THE CONTINUITY OF THE BLOCK HEATER	
	1 Disconnect the block heater electrical connector from the block heater.
	2 Measure the resistance between the live supply terminal and the negative terminal of the block heater.
	Is the resistance less than 20 ohms? **Yes** GO to D3. . **No** INSTALL a new block heater. For additional information, refer to REFER to: Block Heater (303-03A Engine Cooling - 2.0L NA V6 - AJV6/2.5L NA V6 - AJV6/3.0L NA V6 - AJ27, Removal and Installation). . TEST the system for normal operation.
D3: CHECK THE BLOCK HEATER FOR A SHORT TO GROUND	
	1 Measure the resistance between the live supply terminal and the earth terminal of the block heater.
	Is the resistance less than 10,000 ohms? **Yes** Install a new block heater. For additional information, refer to REFER to: Block Heater (303-03A Engine Cooling - 2.0L NA V6 - AJV6/2.5L NA V6 - AJV6/3.0L NA V6 - AJ27, Removal and Installation). . TEST the system for normal operation. **No** GO to D4. .
D4: CHECK THE CONTINUITY OF THE BLOCK HEATER POWER SUPPLY CABLE	
	1 Measure the resistance of the live supply wire of the block heater cable.
	2 Measure the resistance of the neutral supply wire of the block heater cable.
	3 Measure the resistance of the ground supply wire of the block heater cable.
	Is the resistance less than 5 ohms? **Yes** GO to D5. . **No** Install a new block heater power supply cable. TEST the system for normal operation.
D5: CHECK THE BLOCK HEATER POWER SUPPLY CABLE FOR A SHORT CIRCUIT	
	1 Measure the resistance between the live supply wire and the neutral supply wire of the block heater cable.
	2 Measure the resistance between the live supply wire and the ground wire of the block heater cable.
	Is the resistance less than 10,000 ohms? **Yes** Install a new block heater power supply cable. TEST the system for normal operation. **No** Repair the mains power supply to the vehicle block heater cable. TEST the system for normal operation.

Component Tests

Pressure Test

WARNING: Never remove the coolant pressure cap under any circumstances while the engine is operating. Failure to follow this instruction may result in personal injury.

To avoid having scalding hot coolant or steam blow out of the cooling system, use extreme care when removing the coolant pressure cap from a hot cooling system. Wait until the engine has cooled, then wrap a thick cloth around the coolant pressure cap and turn it slowly until the pressure begins to release. Step back while the pressure is released from the system. When certain all the pressure has been released (still with a cloth) turn and remove the coolant pressure cap from the coolant expansion tank. Failure to follow these instructions may result in personal injury.

1. **1.** Switch the engine OFF.
2. **2.** Open the hood and install protective fender covers.
3. **3.** Carefully remove the coolant pressure cap from the coolant expansion tank to relieve pressure from the cooling system. Add coolant to the coolant expansion tank as necessary.
4. **4.** Install the cooling system Pressure Tester adaptor tightly to the coolant expansion tank.
5. **5.** Attach the pressure pump and gauge to the adapter fitting and pressurize the cooling system to 100 kPa (14.5 psi).
6. **6.** Observe the gauge reading for approximately two minutes. The pressure should not drop during this time.
   - If system holds pressure, proceed to step 8.
   - If the pressure drops check for leaks in the cooling system. Correct any leaks found and recheck the system.
7. **7.** Release the system pressure by slowly loosening the cooling system Pressure Tester adaptor. Check the coolant level and replenish as necessary with the correct coolant solution.
8. **8.** Conduct the pressure cap Pressure Test in this section.

Coolant Expansion Tank Pressure Cap Pressure Test

WARNING: Never remove the coolant expansion tank cap under any circumstances while the engine is operating. Failure to follow these instructions may result in damage to the cooling system or engine and/or personal injury. To avoid having scalding hot coolant or steam blow out of the cooling system, use extreme care when removing the coolant expansion tank cap from a hot cooling system. Wait until the engine has cooled, then wrap a thick cloth around the coolant expansion tank cap and turn it slowly until the pressure begins to release, step back while the pressure is released from the system. When certain that all pressure has been released, (still with a cloth) turn and remove the coolant expansion tank cap. Failure to follow these instructions may result in personal injury.

1. **1.** Remove the coolant pressure cap from the coolant expansion tank.
2. **2.** Install the coolant pressure cap to the coolant system Pressure Tester.
3. **3.** Operate the cooling system pressure tester. Pressurize the coolant pressure cap until the pressure relief valve in the coolant pressure cap opens and observe the gauge reading.

   • NOTE: If the plunger of the pump is operated too quickly, an erroneous pressure reading will result.

   3. Compare the gauge reading with the maximum opening pressure of the coolant pressure cap: 100 KPa (14.5 psi).
4. **4.** Release the pressure. Repeat Step 3 at least twice to make sure that the pressure test reading is repeatable and within acceptable gauge reading limits of the expansion tank cap.
5. **5.** If the pressure test gauge readings are not within acceptable gauge reading limits, install a new coolant pressure cap.
6. **6.** Pressurize the coolant pressure cap until the pressure is just below the opening pressure of the coolant pressure cap.
7. **7.** Observe the reading of the pressure gauge for one minute. The pressure should not fall within this time.
8. **8.** If the pressure falls below 10 KPa (1.5 psi) of the recorded pressure, install a new coolant pressure cap.

Thermostat Test, Mechanical

• NOTE: Fully open means the thermostat valve lifts a distance of 9.0 mm (0.35 inch) or more off the valve seat.

1. **1.** Remove the thermostat. For additional information, refer to
   REFER to: Thermostat (303-03A Engine Cooling - 2.0L NA V6 - AJV6/2.5L NA V6 - AJV6/3.0L NA V6 - AJ27, Removal and Installation).
   .
2. **2.** Immerse the thermostat in water.
3. **3.** Increase the temperature of the water.
4. **4.** Observe the state of the thermostat and the temperature of the water.
5. **5.** The thermostat should begin to open at 82°C (179°F) and is fully open at 93°C (199°F).
6. **6.** If the thermostat fails to open within acceptable limits, install a new thermostat.

Radiator Leak Test, Removed From the Vehicle

CAUTION: Do not leak test an aluminium radiator in the same water that is used to leak test copper/brass radiators. Flux and caustic cleaners may be present in the test water which will corrode aluminum.

Clean the radiator before leak testing to prevent contamination of the test tank. Leak test the radiator in clean water with 138 kPa (20 psi) air pressure.

A separate clean test tank is recommended for aluminium radiators. If a separate tank is not available for aluminium radiator testing, rinse the test tank each time before testing an aluminium radiator.

Engine Cooling - 2.0L NA V6 - AJV6 / 2.5L NA V6 - AJV6 / 3.0L NA V6 - AJ27 - Cooling System Backflushing

General Procedures

• CAUTIONS:

The heater core must be backflushed separately from the engine cooling system to prevent the engine cooling system particles from clogging the heater core tubes and reducing (or eliminating) coolant flow through the heater core.

All engine cooling system flushing and backflushing procedures must include a separate backflushing of the heater core after the flushing or backflushing of the engine cooling system.

Heater core internal pressure must not exceed 100 kPa (14.5 psi). Failure to follow this instruction may cause damage to the heater core.

• NOTE: Cooling system backflushing should be carried out before the cooling system components are installed after the cooling system flushing procedure.

1. Disconnect the heater outlet coolant hose from the engine and connect the heater hose to a suitable hose pipe.
2. Disconnect the heater inlet coolant hose from the engine and allow the coolant to drain into a suitable container.
3. Turn the water supply valve to the hose ON and allow water pressure to flow through the heater core.
4. Allow water pressure to flow through the heater core for approximately five minutes.
5. Turn the water supply valve to the hose OFF and disconnect the hose pipe from the heater hose.
6. Connect the heater inlet coolant hose to the engine.
7. Connect the heater outlet coolant hose to the engine.
8. Fill the cooling system as described using a 50% mixture of Jaguar Premium Cooling System Fluid, or equivalent meeting Jaguar specification ESE-M97B44-A and 50% distilled water.
9. Test the system for correct heater performance with the specified engine cooling system conditions.

Radiator Backflushing

1. Remove the radiator. For additional information, refer to Radiator.
2. Invert the radiator.
3. Connect a suitable hose pipe to the lower coolant hose connection of the radiator.
4. Turn the water supply valve to the hose ON and allow water pressure to flow through the radiator.
5. Allow water pressure to flow through the radiator for approximately five minutes.
6. Turn the water supply valve to the hose OFF and disconnect the hose pipe from the radiator.
7. Allow the coolant to drain from the radiator.
8. Install the radiator. For additional information, refer to Radiator.

Engine Backflushing

• NOTE: Make sure that the thermostat is removed before backflushing the engine.

1. Position the high-pressure water hose into the engine through the engine return and backflush the engine.
2. Connect a suitable hose pipe to the upper coolant hose connection of the engine.
3. Turn the water supply valve to the hose ON and allow water pressure to flow through the engine.
4. Allow water pressure to flow through the engine for approximately five minutes.
5. Turn the water supply valve to the hose OFF and disconnect the hose pipe from the upper coolant hose connection of the engine.
6. Connect the upper coolant hose to the engine.
7. Fill the cooling system as described using a 50% mixture of Jaguar Premium Cooling System Fluid or equivalent, meeting Jaguar specification ESE-M97B44-A and 50% distilled water.

Engine Cooling - 2.0L NA V6 - AJV6 / 2.5L NA V6 - AJV6 / 3.0L NA V6 - AJ27 - Cooling System Draining, Filling and Bleeding

General Procedures

• WARNINGS:

Never remove the coolant pressure cap under any circumstances while the engine is operating. Failure to follow this instruction may result in personal injury.

To avoid having scalding hot coolant or steam blow out of the cooling system, use extreme care when removing the coolant pressure cap from a hot cooling system. Wait until the engine has cooled, then wrap a thick cloth around the coolant pressure cap and turn it slowly until the pressure begins to release. Step back while the pressure is released from the system. When certain all the pressure has been released (still with a cloth) turn and remove the coolant pressure cap from the coolant expansion tank. Failure to follow these instructions may result in personal injury.

To avoid the possibility of personal injury, do not operate the engine with the hood open until the fan blades have been examined for cracks and separation. Failure to follow this instruction may result in personal injury.

• CAUTIONS:

Do not run the engine without first making sure the engine cooling fans operate. Start the engine, set air conditioning (A/C) to maximum cold, set the blower motor to maximum and observe that the engine cooling fan operates. Failure to follow this instruction may cause damage to the engine.

The engine cooling system must be maintained with the correct concentration and type of anti-freeze solution to prevent corrosion and frost damage.

Do not RUN the engine with the coolant pressure cap removed. Failure to follow this instruction may cause damage to the engine.

Do not RUN the engine without the correct level of coolant. Failure to follow this instruction may cause damage to the engine.

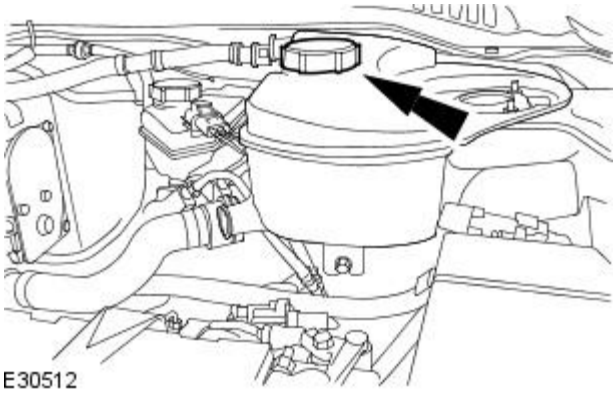

1. WARNING: Relieve the cooling system pressure by unscrewing the coolant pressure cap.

Remove the coolant expansion tank pressure cap.

2. Remove the undertray. For additional information, refer to Section 501-02 Front End Body Panels.

3. Remove the coolant drain plug.

- Drain the coolant into a suitable container.

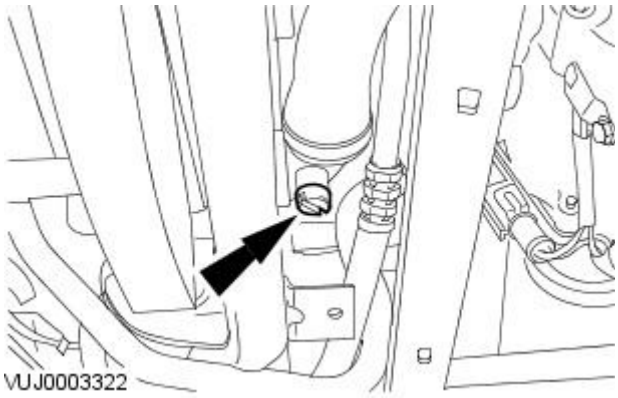

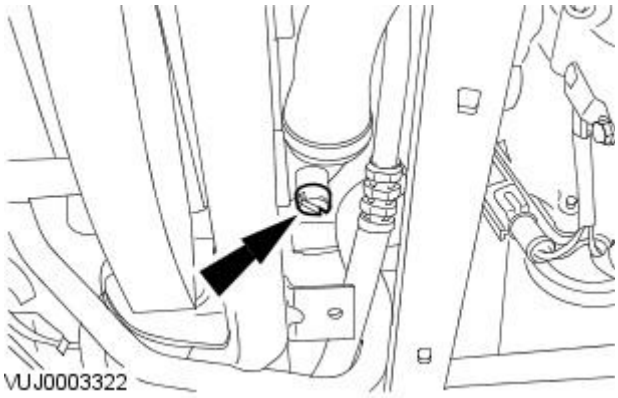

4. CAUTION: Do not over tighten the drain plug. Failure to follow this instruction may cause damage to the vehicle.

Install the drain plug when all coolant has drained.

- Tighten to 1 Nm.
- Remove the drain tray.

5. Install the undertray. For additional information, refer to Section 501-02 Front End Body Panels.

6. Lower the vehicle.

7. Remove the engine cover.

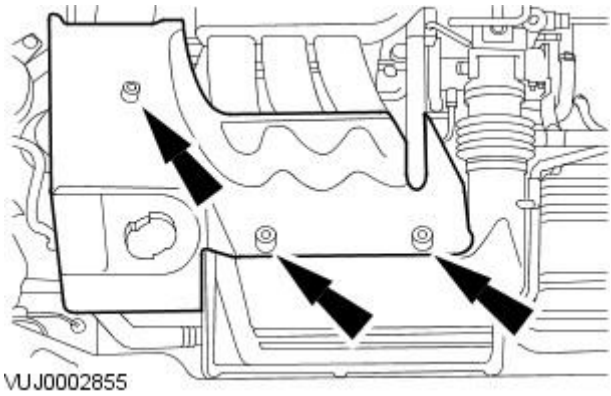

8. Fill the cooling system up to the MAX mark on the coolant expansion tank using a 50% mixture of Jaguar Premium Cooling System Fluid or equivalent, meeting Jaguar specification ESE-M97B44-A and 50% distilled water.

9. Install the coolant expansion tank pressure cap.

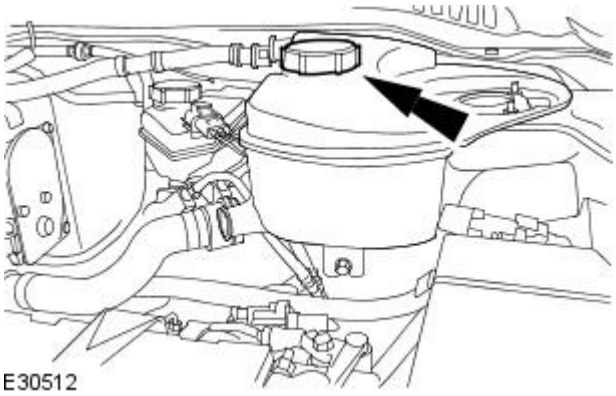

10. NOTE: During this procedure the thermostat should open.

START and RUN the engine at 2000 rpm until the cooling fan operates.

11. Stop the engine and allow to cool for two minutes.

12. Loosely install a pipe clamp to the heater inlet hose.

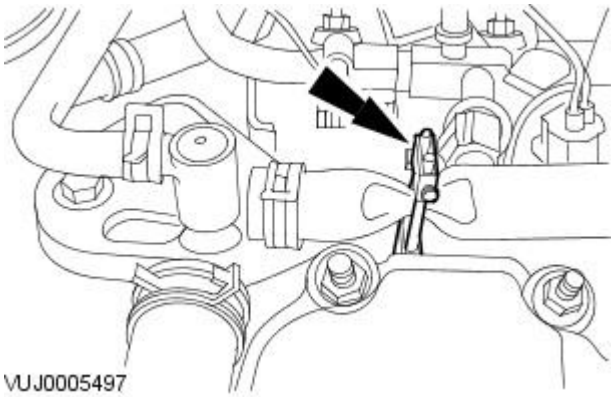

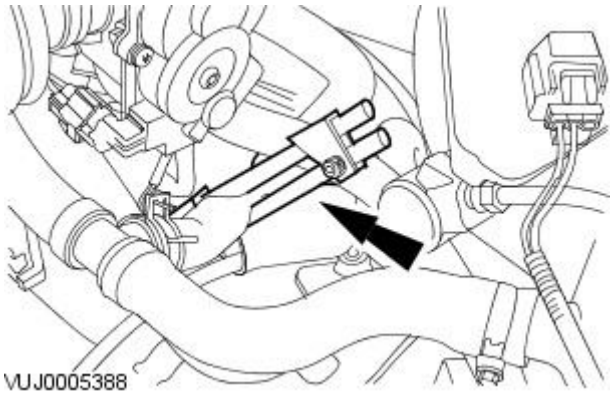

13. Loosely install a pipe clamp to the heater return hose.

14. START and RUN the engine at 2000 rpm.

15. With the engine at 2000 rpm, fully clamp the heater outlet hose and then fully clamp the heater inlet hose.

16. Continue to run the engine for a further two minutes.

17. Switch the engine off.

18. Remove the heater hose clamps.

19. Fit the engine cover.

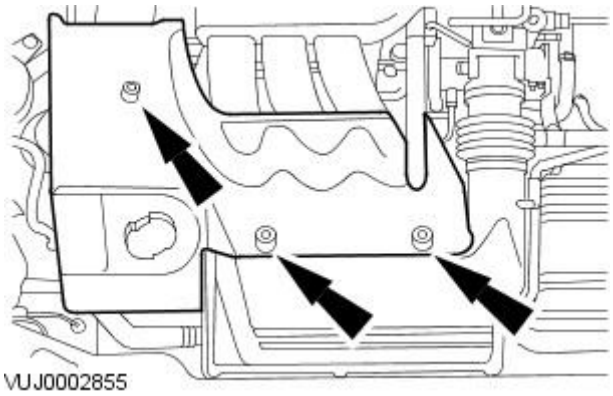

20. Allow the vehicle to cool to room temperature.

21. Remove the coolant expansion tank pressure cap, top up the coolant level to the MAX mark on the coolant expansion tank.

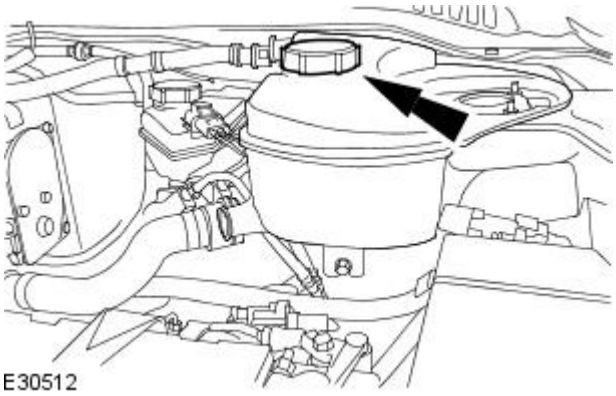

22. Install the coolant expansion tank pressure cap.

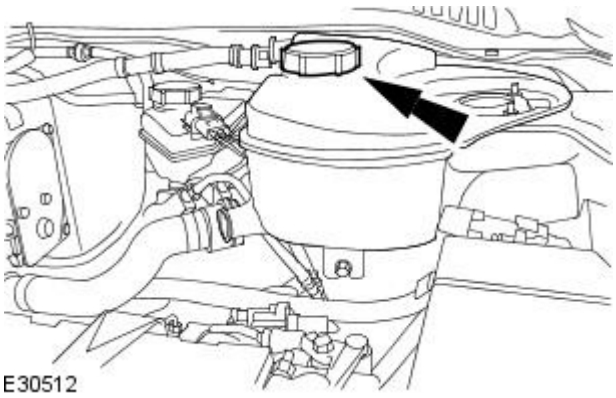

Engine Cooling - 2.0L NA V6 - AJV6 / 2.5L NA V6 - AJV6 / 3.0L NA V6 - AJ27 - Cooling System Flushing

General Procedures

• NOTE: To remove rust, sludge and other foreign material from the cooling system, use Premium Cooling System flush, meeting Jaguar specification EGR-M14P7-A, which is safe for use with aluminium cooling systems. This cleaning restores cooling system efficiency and helps prevent overheating.

• NOTE: In severe cases where cleaning solvents will not properly clean the cooling system, it will be necessary to use the pressure flushing method using Cooling System Flusher, 164-R3670 to restore efficient operation.

• NOTE: A pulsating or reversed direction of flushing water will loosen sediment more quickly than a steady flow in the normal coolant flow direction.

• NOTE: Dispose of old coolant and flushing water contaminated with coolant and cleaning chemicals in accordance with local, state and federal laws.

1. Remove the air cleaner. For additional information, refer to Section 303-12A Intake Air Distribution and FilteringSection 303-12B Intake Air Distribution and Filtering.
2. Remove the thermostat. For additional information, refer to Thermostat.
3. Detach the lower coolant hose from the radiator and position to one side.

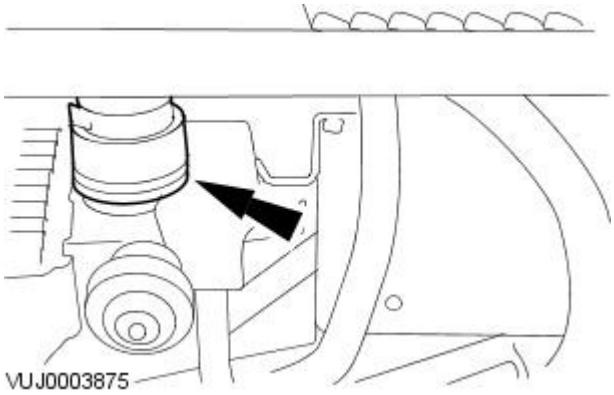

4. Lower the vehicle.
5. Detach the upper coolant hose from the radiator.

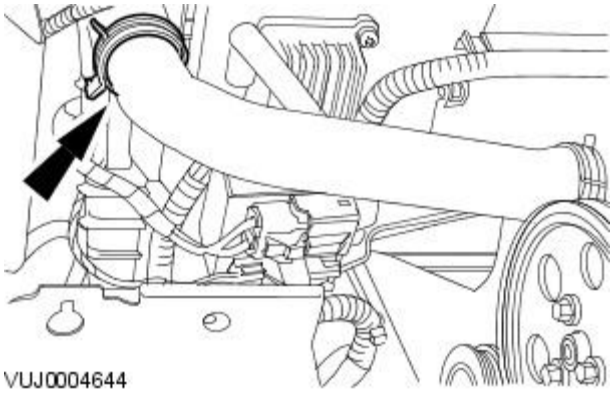

6. Connect a hose pipe to the radiator upper coolant hose connection using a suitable connector.
7. CAUTION: Radiator internal pressure must not exceed 100 kPa (14.5 psi). Failure to follow this instruction may cause damage to the radiator.

   Flush the radiator using the hose pipe until the coolant flowing from the radiator lower coolant hose connection is clear.
8. Remove the hose pipe from the radiator upper coolant hose connection.
9. Connect a hose pipe to the upper coolant hose using a suitable connector.
10. Flush the engine using the hose pipe until the coolant flowing from the radiator lower coolant hose is clear.
11. Remove the hose pipe from the upper coolant hose connection.
12. Connect the upper coolant hose to the radiator.
13. Install the thermostat. For additional information, refer to Thermostat.
14. Fill the cooling system. For additional information, refer to Cooling System Draining, Filling and Bleeding.
15. Install the undertray. For additional information, refer to Section 501-02 Front End Body Panels.
16. Install the air cleaner. For additional information, refer to Section 303-12A Intake Air Distribution and FilteringSection 303-12B Intake Air Distribution and Filtering.

Engine Cooling - 2.0L NA V6 - AJV6 / 2.5L NA V6 - AJV6 / 3.0L NA V6 - AJ27 - Block Heater

Removal and Installation

Removal

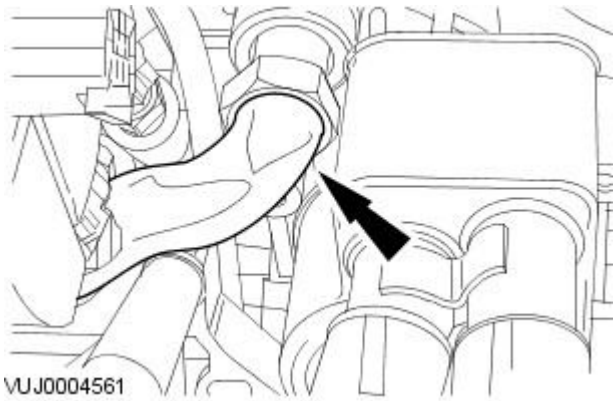

1. Drain the cooling system. For additional information, refer to Cooling System Draining, Filling and Bleeding.
2. Disconnect the block heater electrical connector.

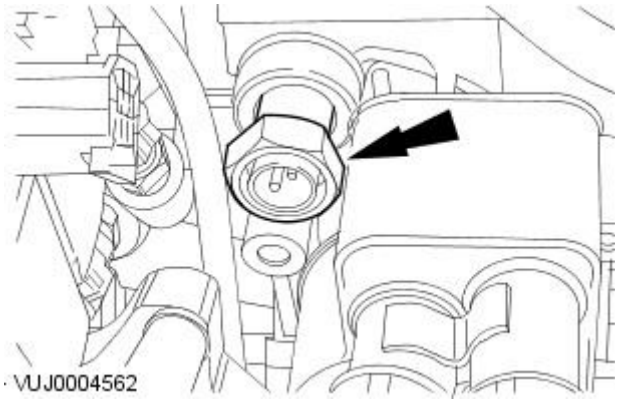

3. Remove the block heater.

Installation

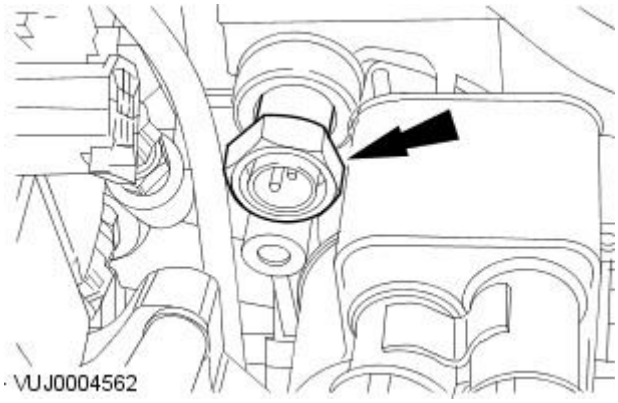

1. To install, reverse the removal procedure.
   - Tighten to 40 Nm.
2. Fill the cooling system. For additional information, refer to Cooling System Draining, Filling and Bleeding.

Engine Cooling - 2.0L NA V6 - AJV6 / 2.5L NA V6 - AJV6 / 3.0L NA V6 - AJ27 - Coolant Expansion Tank

Removal and Installation

Removal

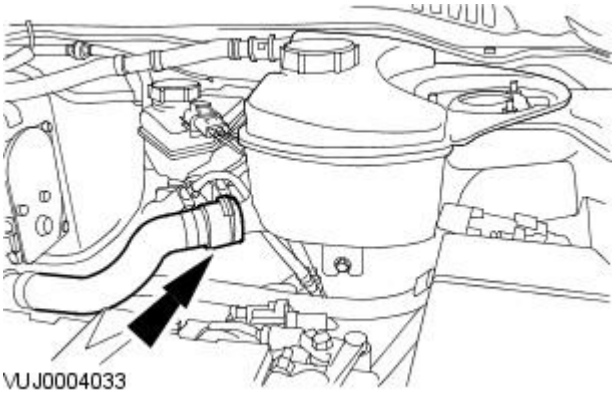

1. NOTE: Clamp the hose to minimize coolant loss.

Detach the coolant expansion tank outlet hose from the coolant expansion tank.

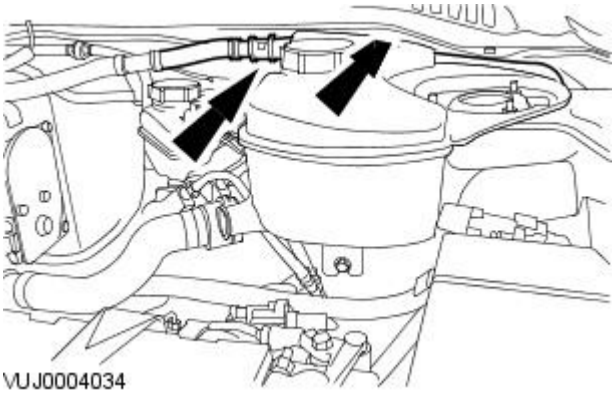

2. NOTE: Clamp the hoses to minimize coolant loss.

Detach the cooling system vent hoses from the coolant expansion tank.

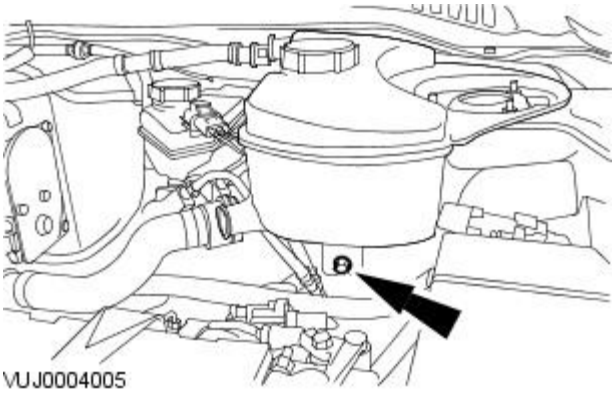

3. Remove the coolant expansion tank retaining bolt.

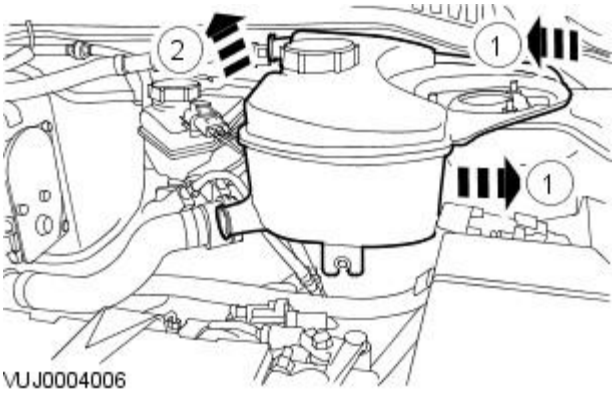

4. Remove the coolant expansion tank.

Installation

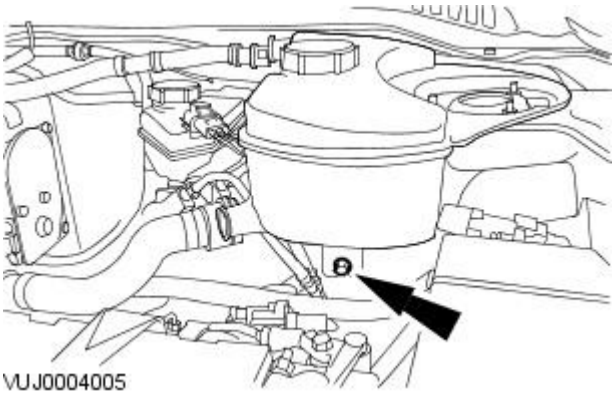

1. To install, reverse the removal procedure.

- Tighten to 3 Nm.

2. Check and top up the cooling system.

Engine Cooling - 2.0L NA V6 - AJV6 / 2.5L NA V6 - AJV6 / 3.0L NA V6 - AJ27 - Cooling Fan Module

Removal and Installation

Removal

1. Remove the air cleaner. For additional information, refer to:

Air Cleaner (303-12A Intake Air Distribution and Filtering - 2.0L NA V6 - AJV6/2.5L NA V6 - AJV6/3.0L NA V6 - AJ27, Removal and Installation),
Air Cleaner (303-12B Intake Air Distribution and Filtering - 2.0L Duratorq-TDCi/2.2L Duratorq-TDCi (110kW/150PS) - Puma, Removal and Installation).

2. Remove the battery tray.
For additional information, refer to: Battery Disconnect and Connect (414-01 Battery, Mounting and Cables, General Procedures).

3. NOTE: Left hand shown, right hand similar.

Disconnect the cooling fan motor electrical connectors.

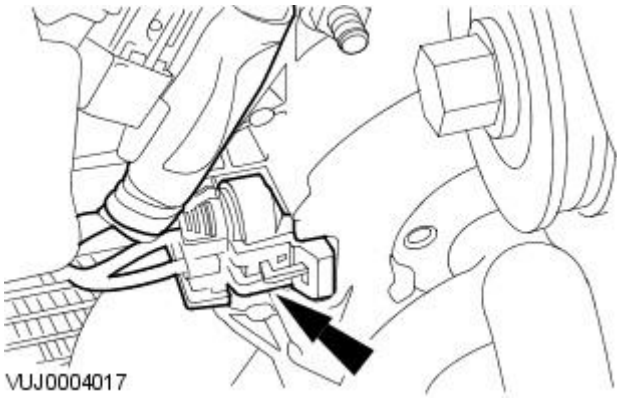

4. Disconnect the cooling fan module electrical connectors.

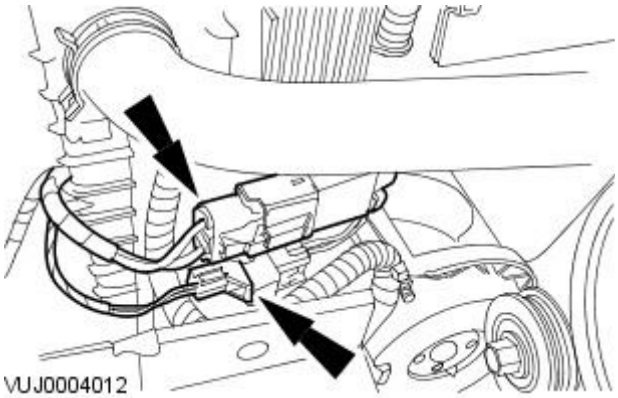

5. Detach the cooling fan module electrical connectors from the cooling fan shroud.

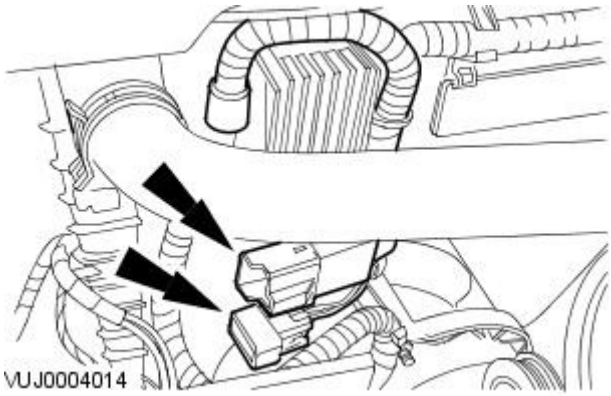

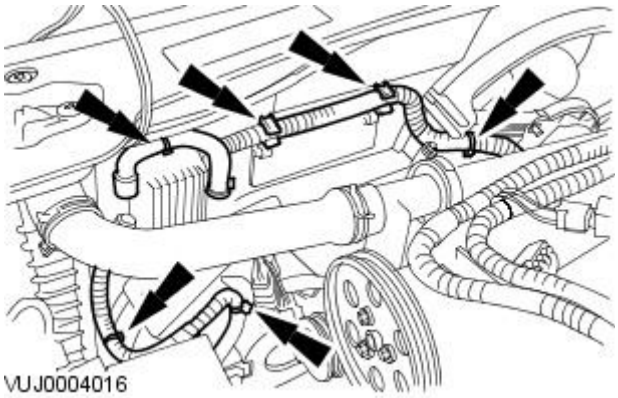

6. Detach the cooling fan module wiring harness from the cooling fan shroud.

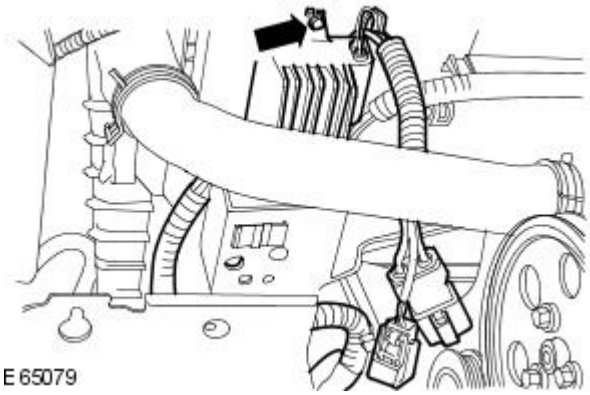

7. Remove the cooling fan module.

Installation

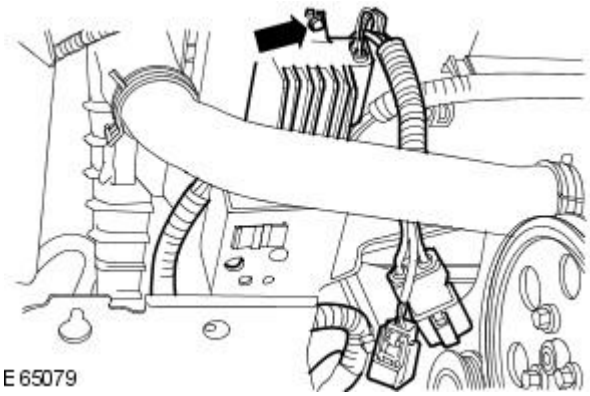

1. To install reverse the removal procedure.

- Tighten to 3 Nm.

Engine Cooling - 2.0L NA V6 - AJV6 / 2.5L NA V6 - AJV6 / 3.0L NA V6 - AJ27 - Cooling Fan Motor

Removal and Installation

Removal

1. Remove the cooling fan motor and shroud. For additional information, refer to Cooling Fan Motor and Shroud.
2. Disconnect the cooling fan motor electrical connector.

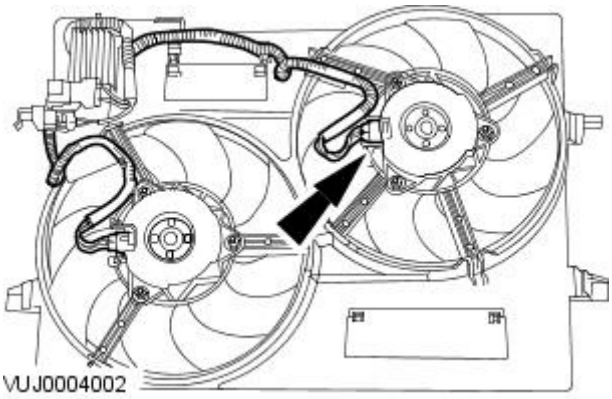

3. Remove the cooling fan motor assembly.

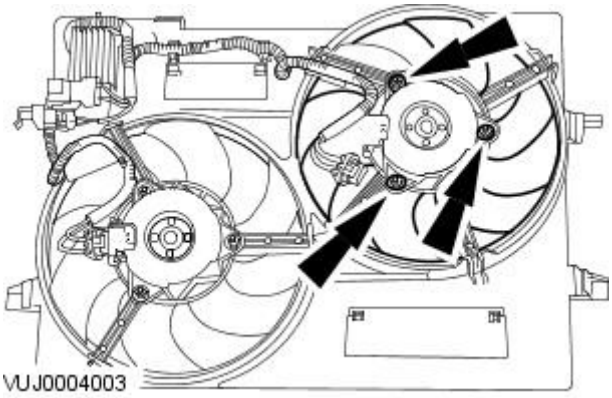

4. Remove the cooling fan from the cooling fan motor.

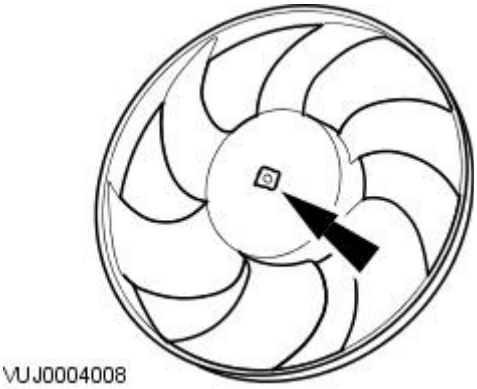

Installation

1. To install, reverse the removal procedure.
   - Tighten to 6 Nm.

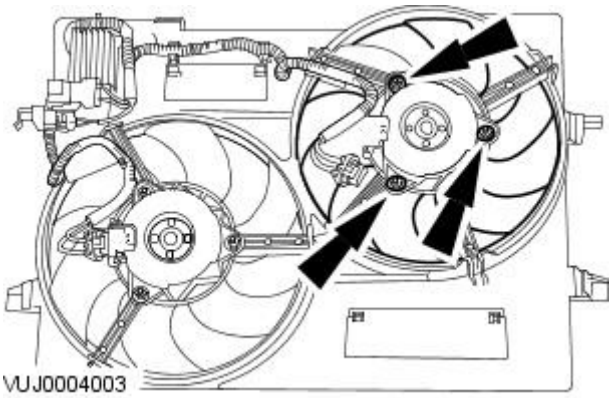

Engine Cooling - 2.0L NA V6 - AJV6 / 2.5L NA V6 - AJV6 / 3.0L NA V6 - AJ27 - Cooling Fan Motor and Shroud

Removal and Installation

Removal

All vehicles

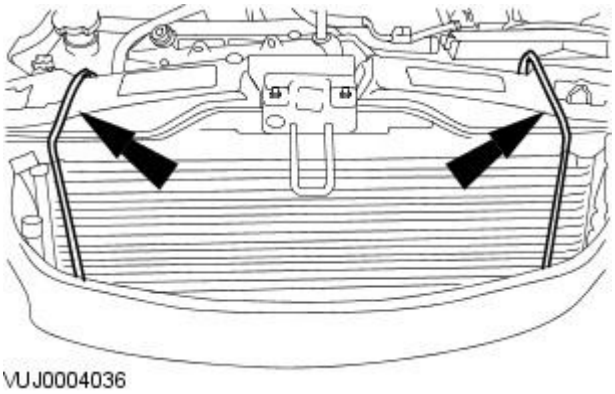

1. Remove the air cleaner.
For additional information, refer to: Air Cleaner (303-12A Intake Air Distribution and Filtering - 2.0L NA V6 - AJV6/2.5L NA V6 - AJV6/3.0L NA V6 - AJ27, Removal and Installation).

2. CAUTION: Make sure that the air conditioning (A/C) condenser is not damaged when installing the retaining straps. Failure to follow this instruction may result in damage to the vehicle.

• NOTE: To allow the cooling module to be partially lowered and supported when the radiator support beam is removed, suitable retaining straps must be installed to the radiator.

Loosely attach suitable retaining straps to the radiator.

3. Drain the cooling system.
For additional information, refer to: Cooling System Draining, Filling and Bleeding (303-03A Engine Cooling - 2.0L NA V6 - AJV6/2.5L NA V6 - AJV6/3.0L NA V6 - AJ27, General Procedures).

4. Lower the vehicle.

Vehicles built up to VIN:E71956

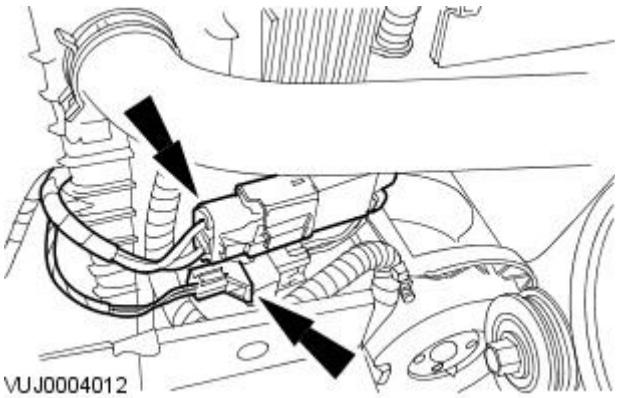

5. Disconnect the cooling fan motor control module electrical connectors.

Vehicles built from VIN:E71957

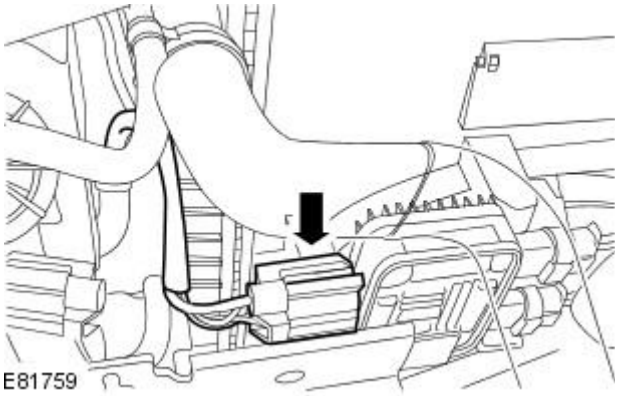

6. Disconnect the cooling fan motor control module electrical connector.

All vehicles

7. Raise the vehicle.

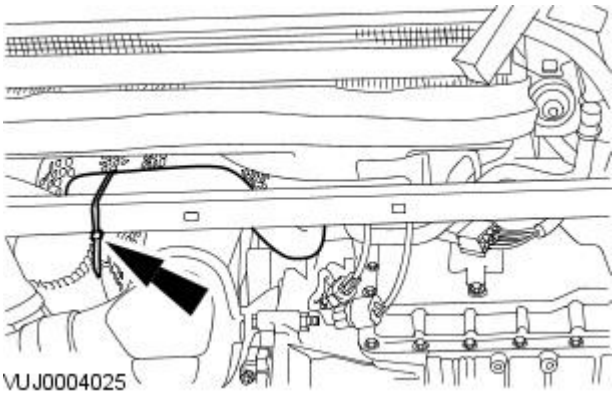

8. Reposition the coolant hose from the engine oil cooler to the thermostat housing and secure it to the front cross member using a suitable retaining strap.

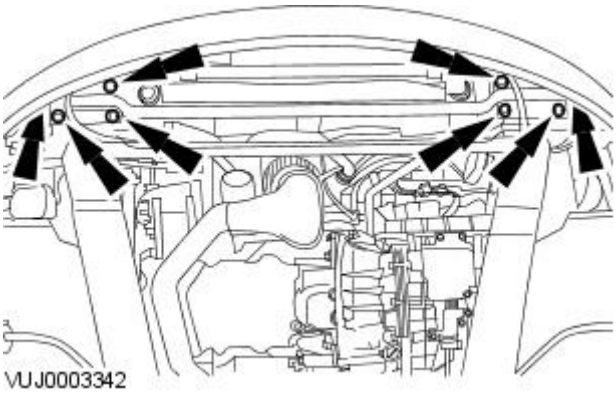

9. Remove the radiator support beam.

- Allow the cooling module to be partially lowered and supported by the retaining straps.

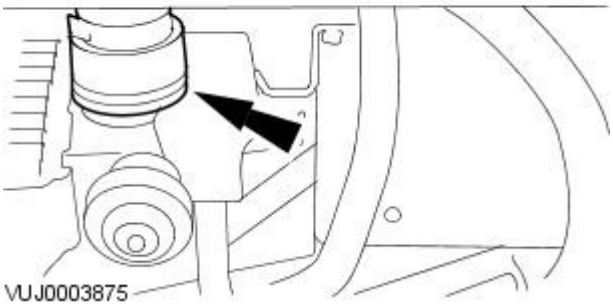

10. Detach the lower coolant hose from the radiator and position to one side.

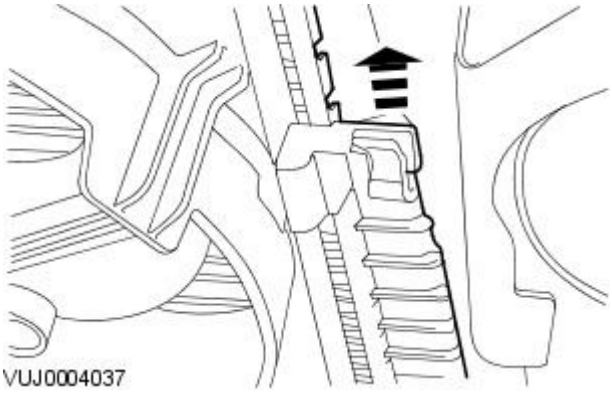

11. CAUTION: Make sure that the retaining lugs of the radiator are not damaged when displacing the cooling fan motor and shroud. Failure to follow this instruction may result in damage to the vehicle.

• NOTE: Right-hand shown, left-hand similar.

Displace the cooling fan motor and shroud from the retaining lugs of the radiator.

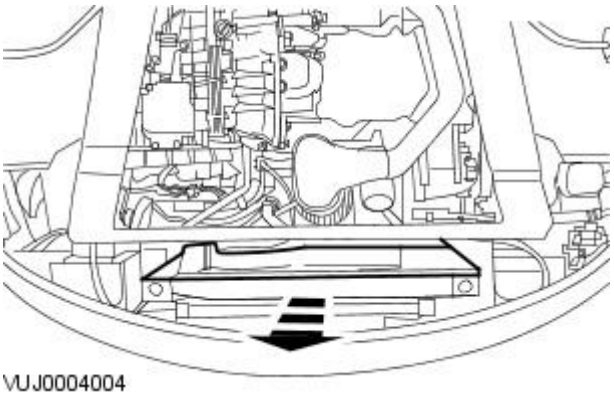

12. CAUTION: Make sure that the radiator is not damaged when removing the cooling fan motor and shroud. Failure to follow this instruction may result in damage to the vehicle.

Remove the cooling fan motor and shroud.

Installation

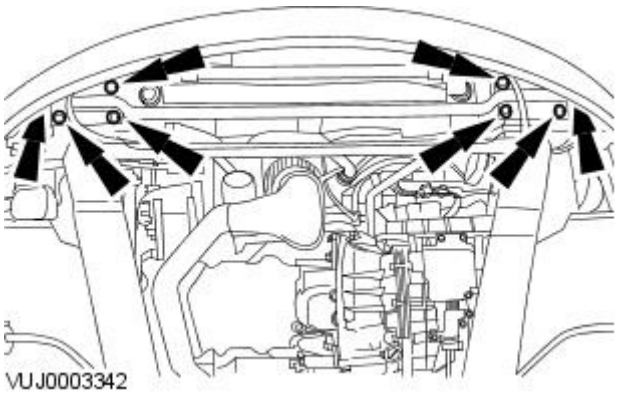

1. CAUTIONS:

Make sure that the radiator is not damaged when installing the cooling fan motor and shroud. Failure to follow this instruction may result in damage to the vehicle.

Make sure that the retaining lugs of the radiator are not damaged when installing the cooling fan motor and shroud. Failure to follow this instruction may result in damage to the vehicle.

To install, reverse the removal procedure.

- Tighten to 25 Nm.

2. Fill the cooling system.
For additional information, refer to: Cooling System Draining, Filling and Bleeding (303-03A Engine Cooling - 2.0L NA V6 - AJV6/2.5L NA V6 - AJV6/3.0L NA V6 - AJ27, General Procedures).

Engine Cooling - 2.0L NA V6 - AJV6 / 2.5L NA V6 - AJV6 / 3.0L NA V6 - AJ27 - Cooling Module

Removal and Installation

Removal

All Vehicles

1. Remove the air cleaner.
   For additional information, refer to: Air Cleaner (303-12A Intake Air Distribution and Filtering - 2.0L NA V6 - AJV6/2.5L NA V6 - AJV6/3.0L NA V6 - AJ27, Removal and Installation).
2. Remove the air cleaner intake duct.

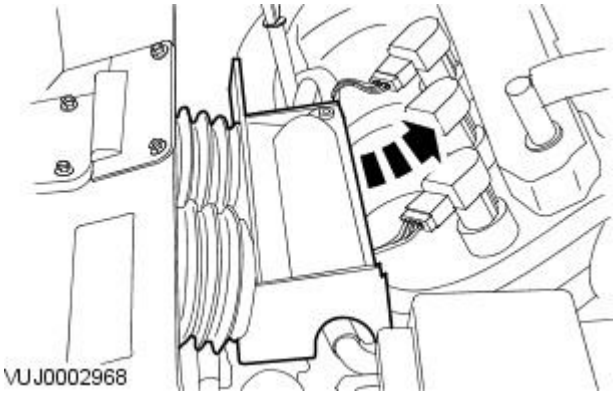

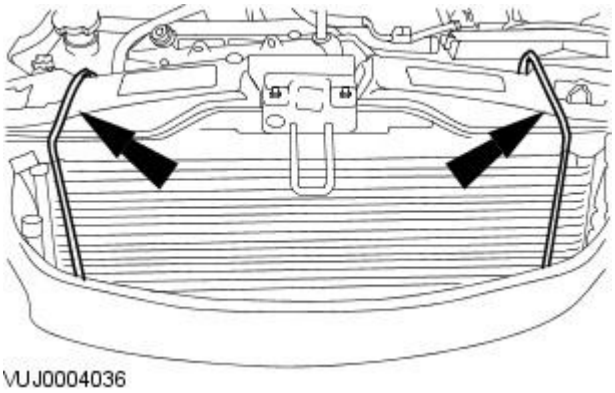

3. CAUTION: Make sure that the air conditioning (A/C) condenser is not damaged when installing the retaining straps. Failure to follow this instruction may result in damage to the vehicle.

   • NOTE: To allow the cooling module to be partially lowered and supported when the radiator support beam is removed, suitable retaining straps must be installed to the A/C condenser.

   Loosely attach suitable retaining straps to the A/C condenser.

4. Drain the cooling system.
   For additional information, refer to: Cooling System Draining, Filling and Bleeding (303-03A Engine Cooling - 2.0L NA V6 - AJV6/2.5L NA V6 - AJV6/3.0L NA V6 - AJ27, General Procedures).
5. Detach the lower coolant hose from the radiator and position to one side.

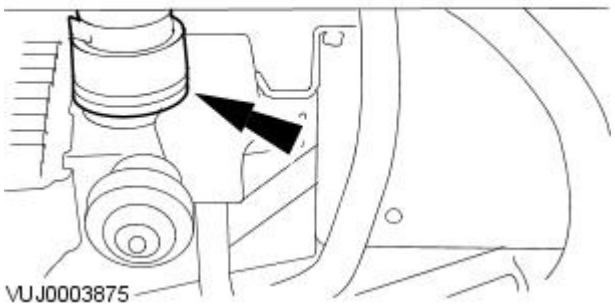

6. Reposition the coolant hose from the engine oil cooler to the thermostat housing and secure it to the front cross member using a suitable retaining strap.

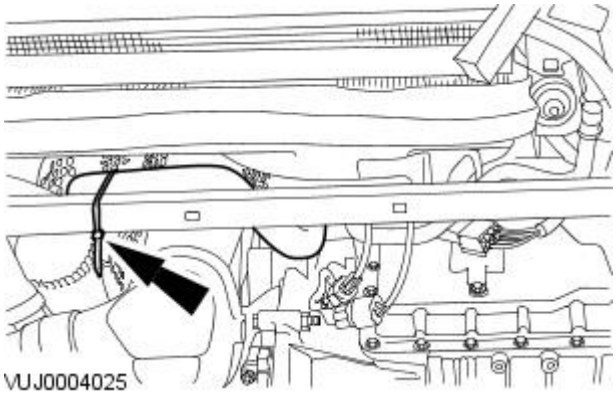

7. Lower the vehicle.

Vehicles built up to VIN:E71956

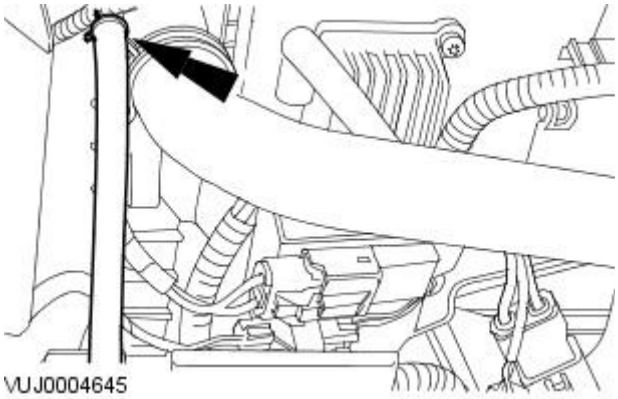

8. Detach the radiator vent hose from the radiator.

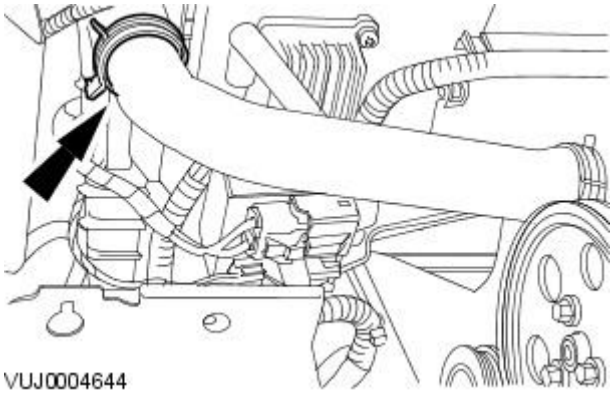

9. Detach the upper coolant hose from the radiator.

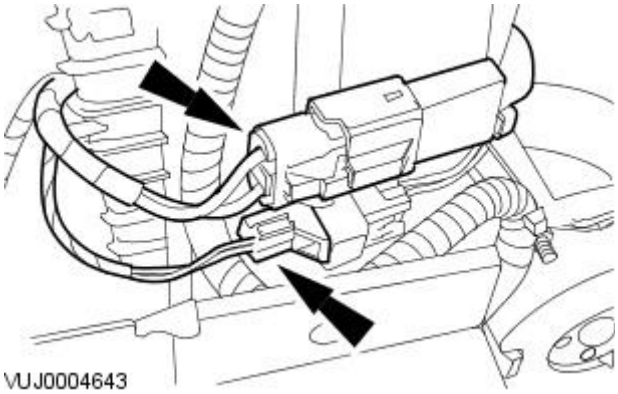

10. Disconnect the cooling fan motor control module electrical connectors.

Vehicles built from VIN:E71957

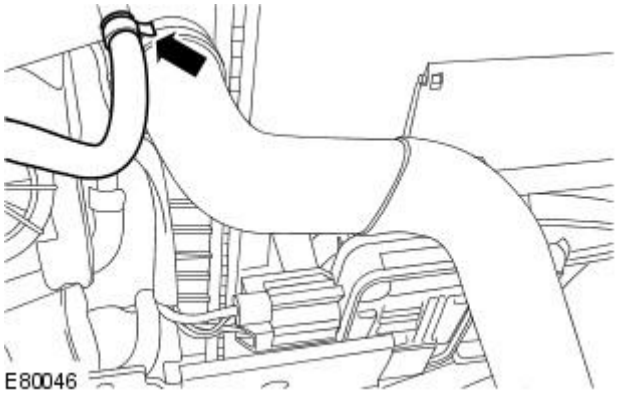

11. Detach the radiator vent hose from the radiator.

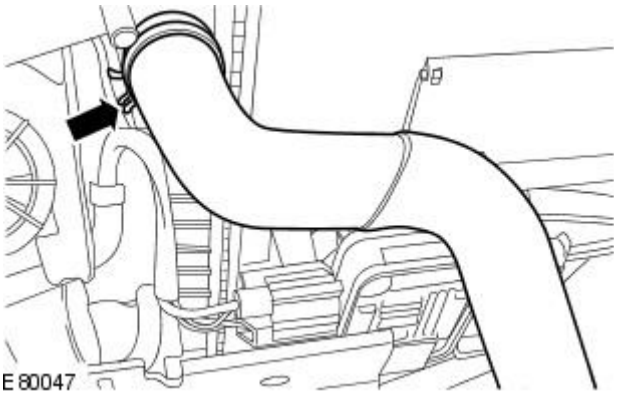

12. Detach the upper coolant hose from the radiator.

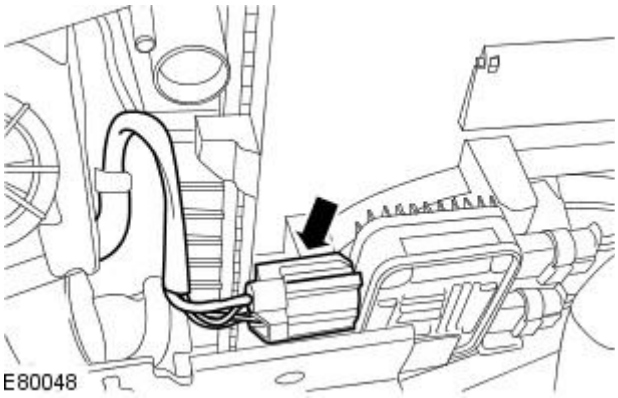

13. Disconnect the cooling fan motor control module electrical connector.

All vehicles

14. Raise the vehicle.

15. Remove the air splitter grille.

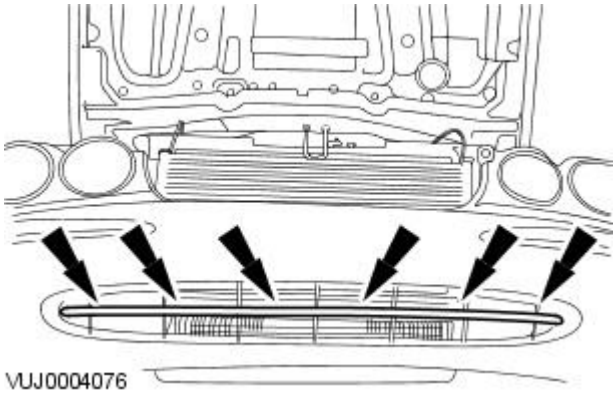

16. Remove the front towing eye trims.

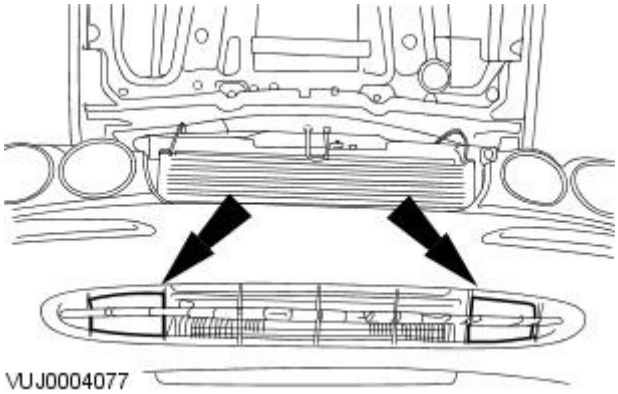

Vehicles With Automatic Transmission

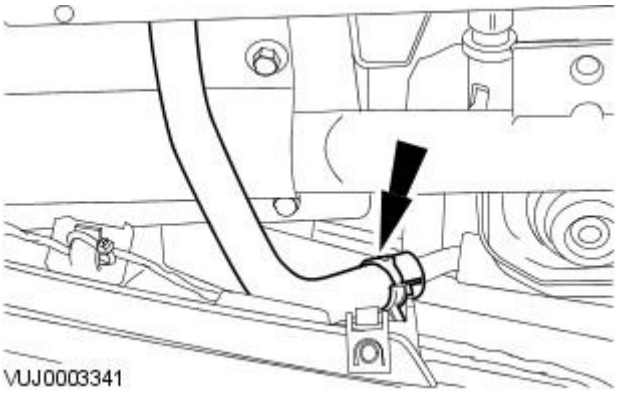

17. NOTE: Left-hand side shown, right-hand side similar.

Detach the power assisted steering oil cooler inlet and return pipes.

- Allow the power assisted steering fluid to drain into a suitable container.
- Using suitable blanking plugs, blank the exposed ports.

Vehicles With Manual Transmission

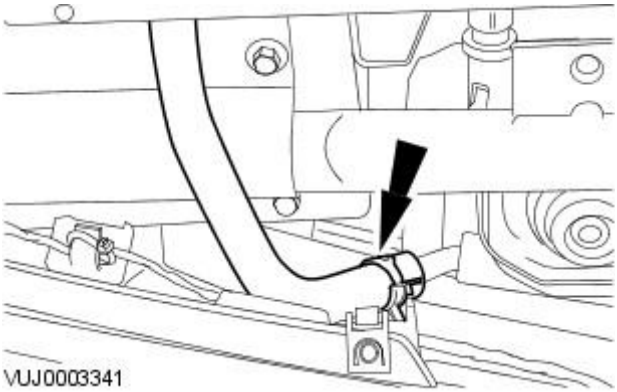

18. Detach the power assisted steering oil cooler inlet pipe.

- Allow the power assisted steering fluid to drain into a suitable container.
- Using suitable blanking plugs, blank the exposed ports.

All Vehicles

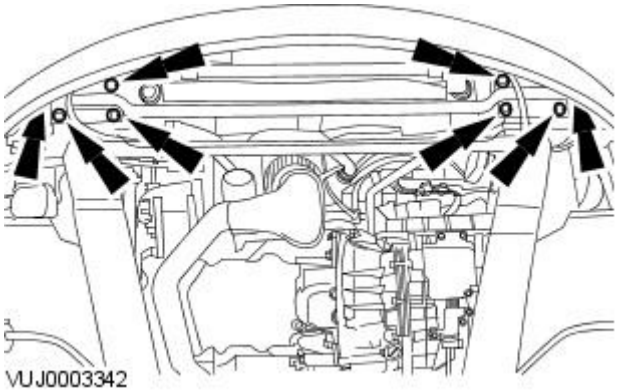

19. Remove the radiator support beam.

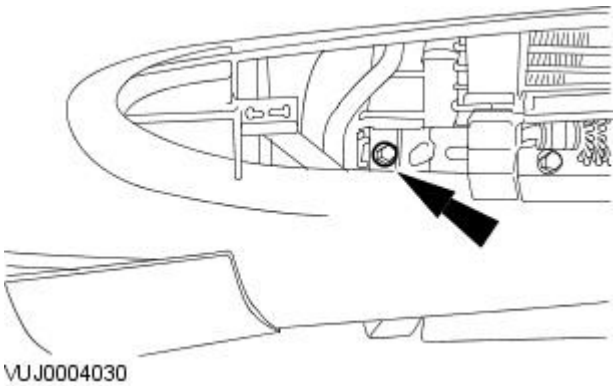

20. CAUTION: Apply suitable tape to the right-hand side lower section of the front bumper to prevent damage to the paintwork from the A/C pipe when the cooling module is lowered. Failure to follow this procedure may cause damage to the vehicle.

Remove the right-hand side A/C condenser retaining bolt from the radiator.

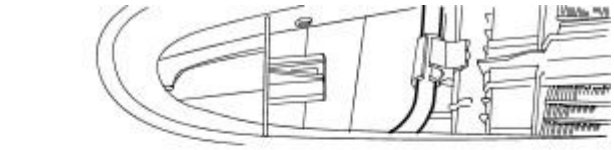

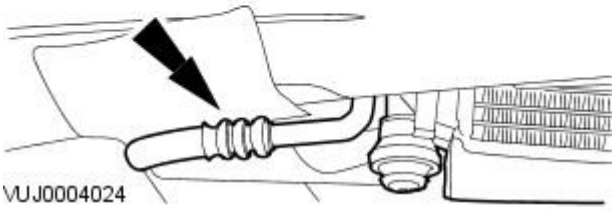

21. Lower the cooling module and the A/C condenser to a position where the air conditioning pipe is forward of the front bumper.

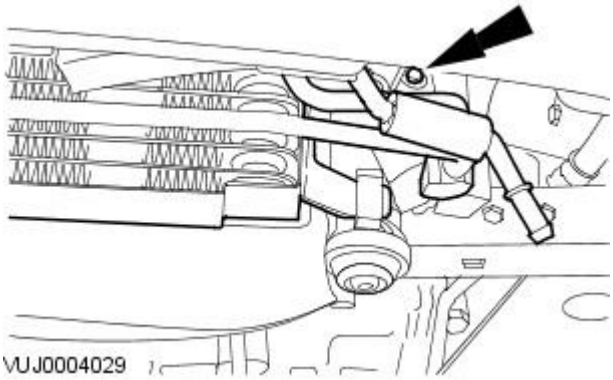

22. Remove the left-hand side A/C condenser retaining bolt from the radiator.

Vehicles With Automatic Transmission

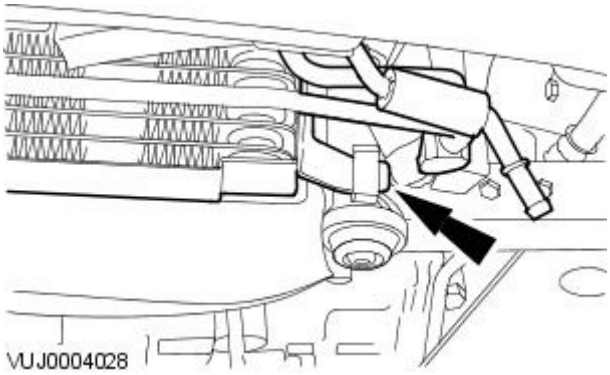

23. NOTE: Left-hand side shown, right-hand side similar.

• NOTE: The power assisted steering oil cooler remains captive to the automatic transmission oil cooler.

Detach the automatic transmission oil cooler from the radiator.

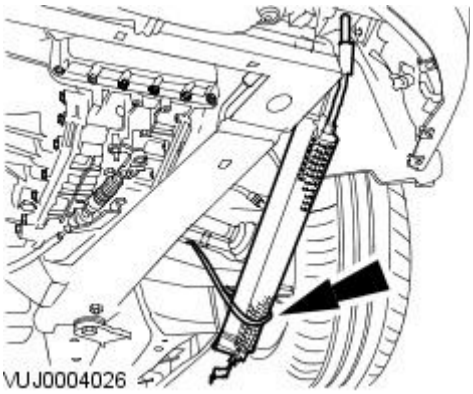

24. CAUTION: Do not allow the power assisted steering oil cooler and automatic transmission oil cooler to hang on the automatic transmission oil cooler pipes. Failure to follow this instruction may cause damage to the vehicle.

Position the power assisted steering oil cooler and the automatic transmission oil cooler to one side and secure with suitable retaining straps.

All vehicles

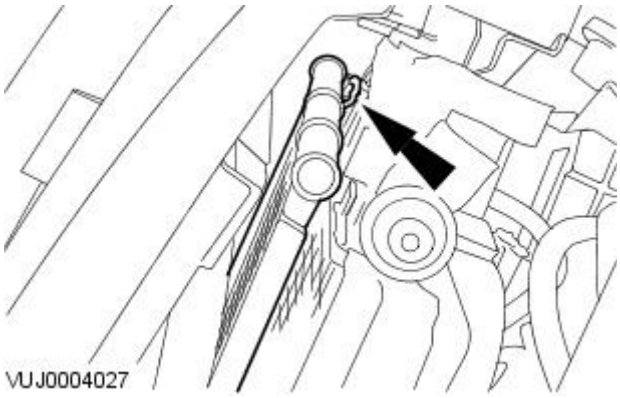

25. NOTE: Left-hand side shown, right-hand side similar.

Detach the cooling module from the A/C condenser.

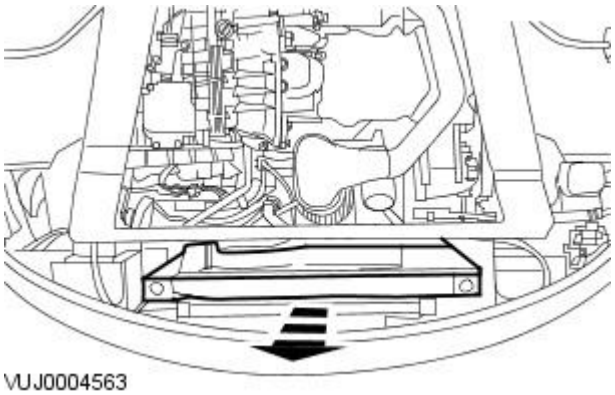

26. CAUTION: Make sure that the radiator and the A/C condenser are not damaged during the removal of the cooling module. Failure to follow this instruction may cause damage to the vehicle.

Remove the cooling module.

Installation

All vehicles

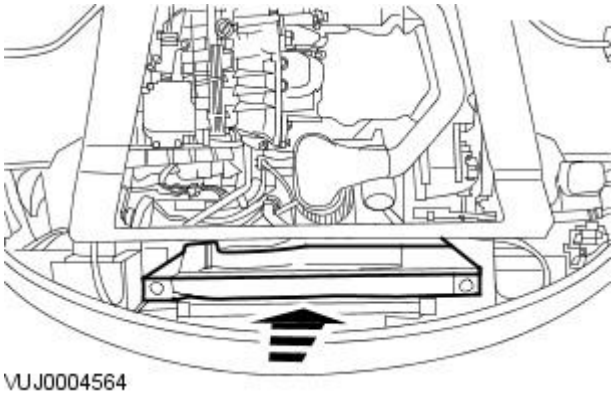

1. CAUTION: Make sure that the radiator and the A/C condenser are not damaged whilst installing the cooling module. Failure to follow this instruction may cause damage to the vehicle.

Install the cooling module.

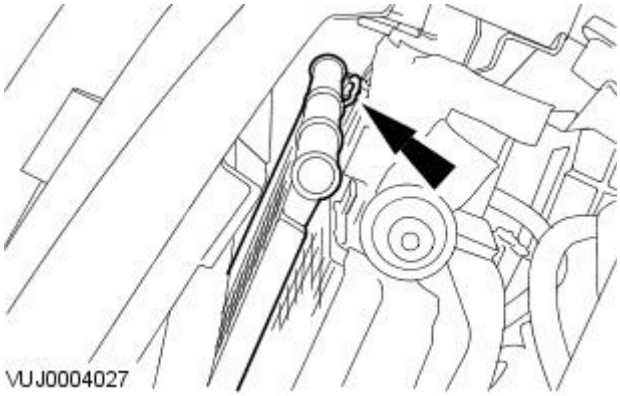

2. NOTE: Left-hand side shown, right-hand side similar.

Attach the cooling module to the A/C condenser.

Vehicles With Automatic Transmission

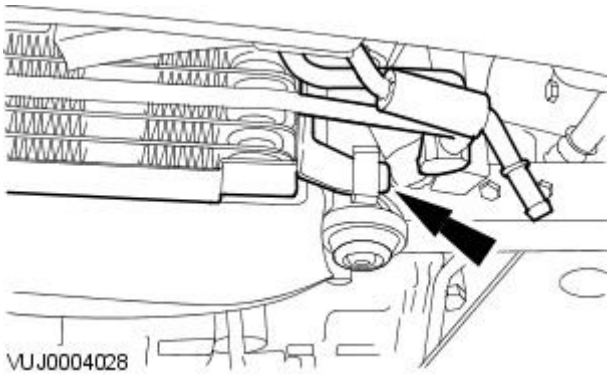

3. NOTE: Left-hand side shown, right-hand side similar.

Install the automatic transmission oil cooler to the radiator.

All Vehicles

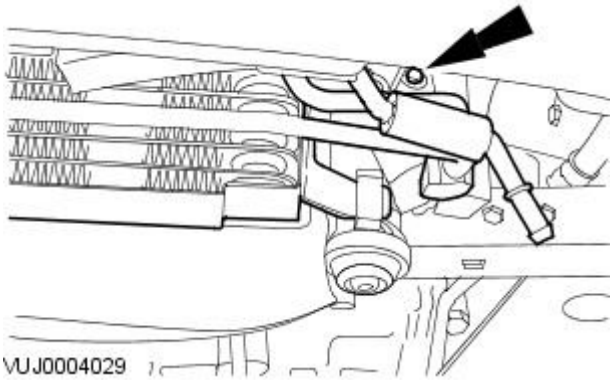

4. Install the left-hand side A/C condenser retaining bolt.

- Tighten to 7 Nm.

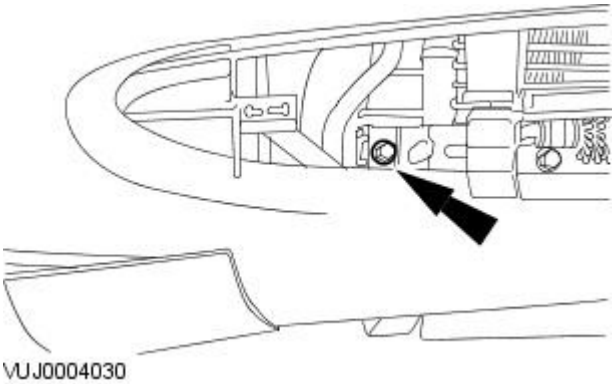

5. Install the right-hand side A/C condenser retaining bolt.

- Tighten to 7 Nm.

6. Lower the vehicle.

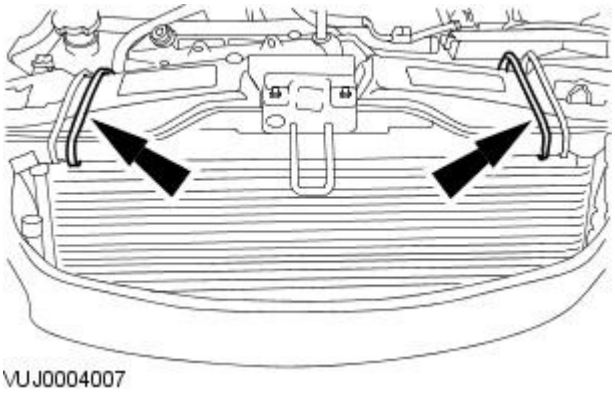

7. CAUTION: Do not over tighten the retaining straps. Failure to follow this instruction may cause damage to the vehicle.

• NOTE: To allow installation of the radiator support beam, install retaining straps to the radiator to hold the cooling module in position.

Install suitable retaining straps to the radiator. Align the cooling module to the upper isolator mounting points.

- Carefully tension the retaining straps to hold the cooling module in position.

8. Raise the vehicle.

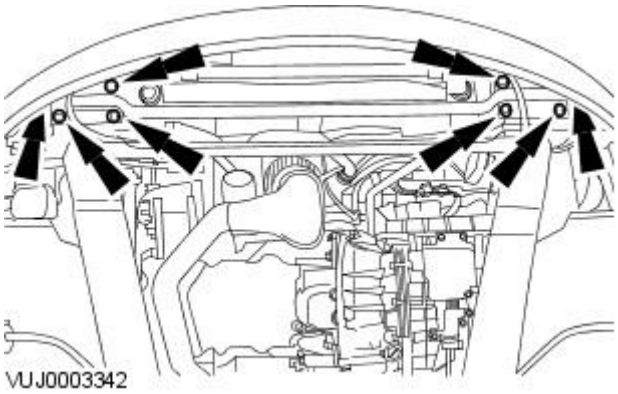

9. Install the radiator support beam.

- Tighten to 25 Nm.

Vehicles With Automatic Transmission

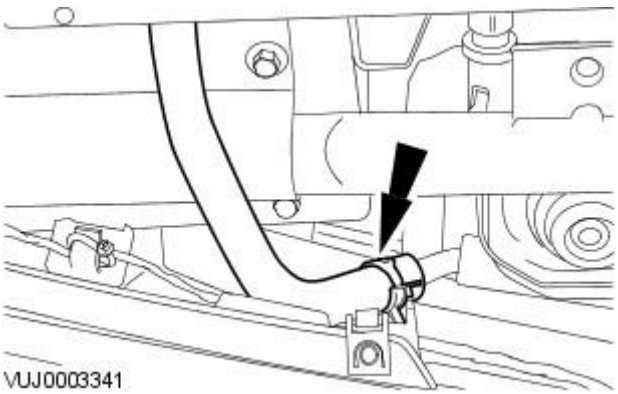

10. NOTE: Left-hand side shown, right-hand side similar.

Connect the power assisted steering oil cooler inlet and return pipes.

- Remove the blanking plugs.

Vehicles With Manual Transmission

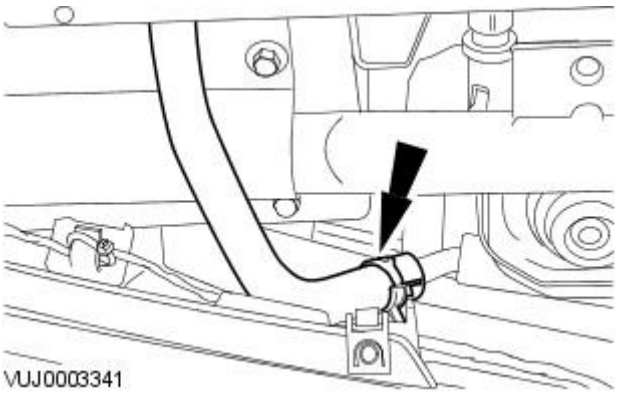

11. Connect the power assisted steering oil cooler inlet pipe.

- Remove the blanking plugs.

All Vehicles

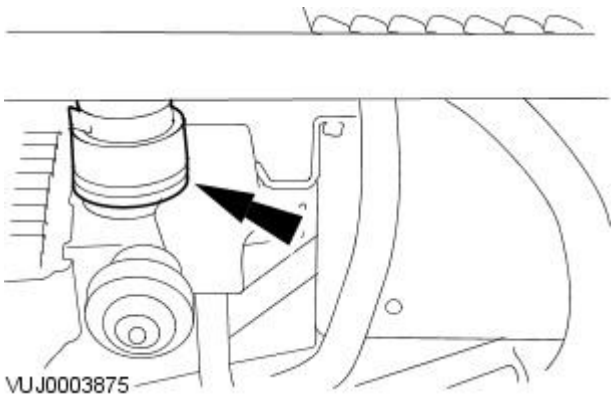

12. Connect the lower coolant hose to the radiator.

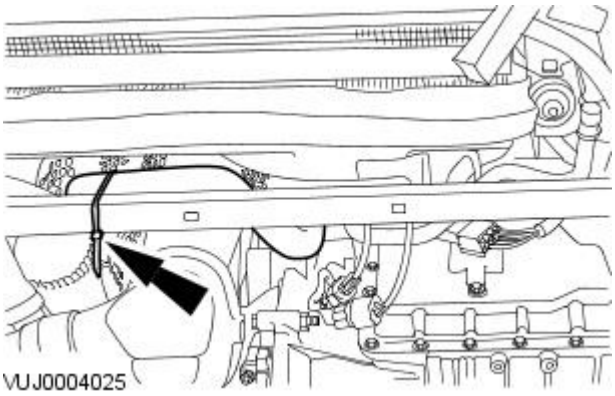

13. Remove the retaining strap from the engine oil cooler coolant hose.

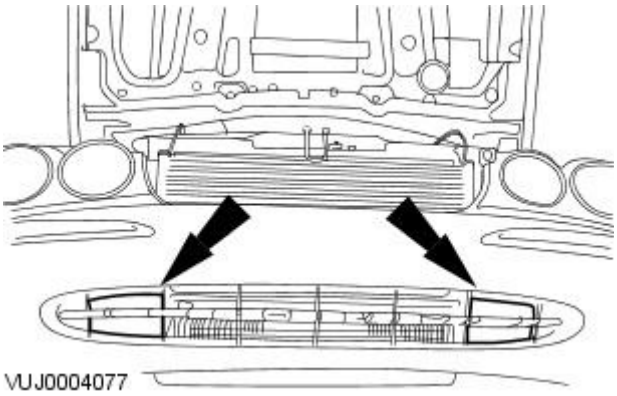

14. Install the front towing eye trims.

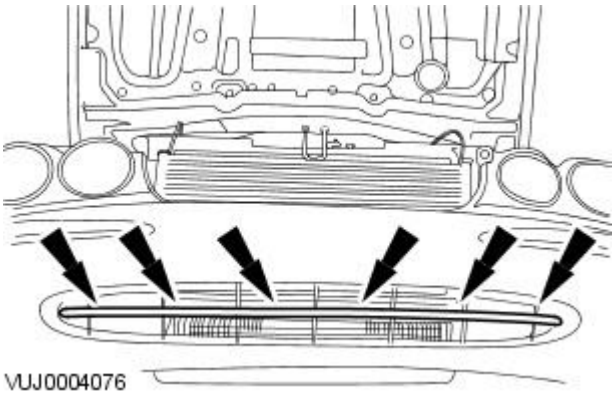

15. Install the air splitter grille.

- Remove the protective tape from the front bumper.

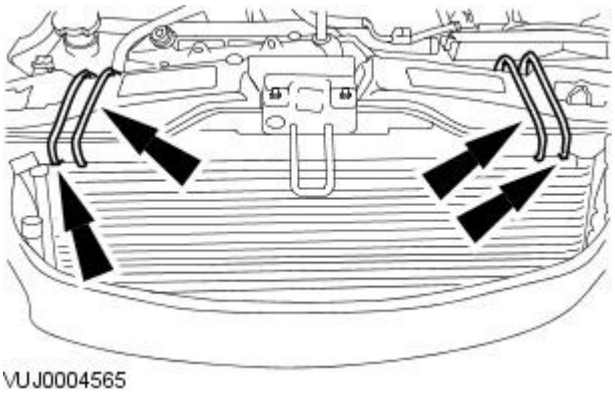

16. Lower the vehicle.

17. Remove the retaining straps from the A/C condenser and radiator.

Vehicles built from VIN:E71957

18. Connect the cooling fan motor control module electrical connector.

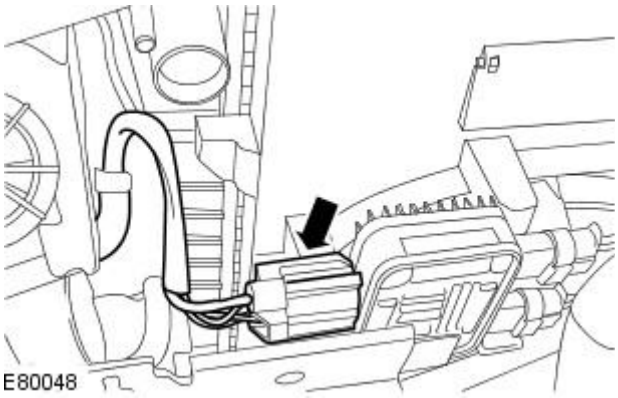

19. Connect the upper coolant hose onto the radiator.

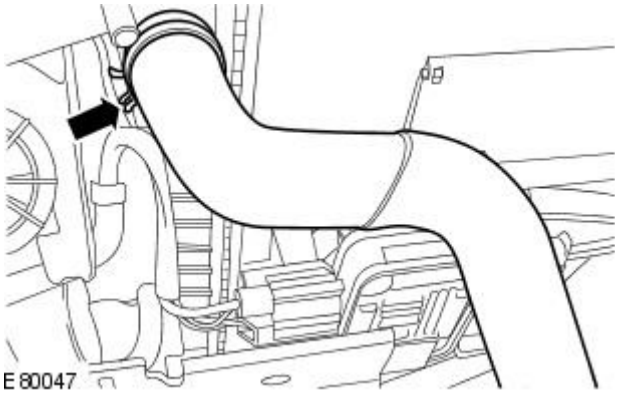

20. Connect the radiator vent hose onto the radiator.

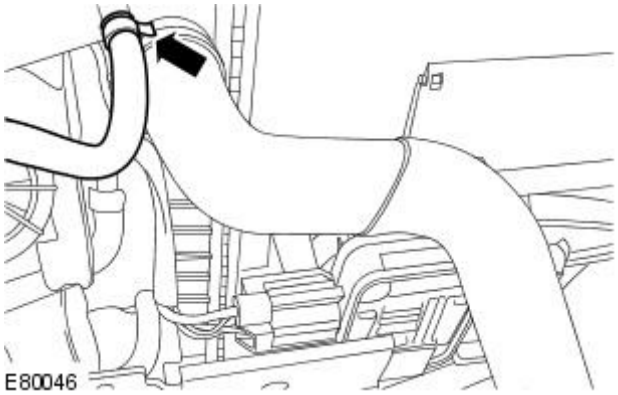

Vehicles built up to VIN:E71956

21. Connect the cooling fan motor control module electrical connectors.

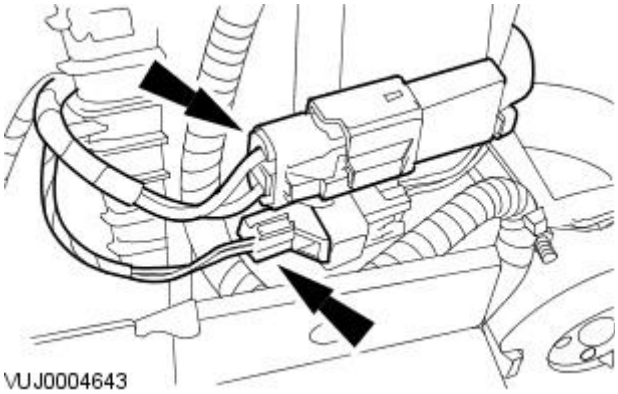

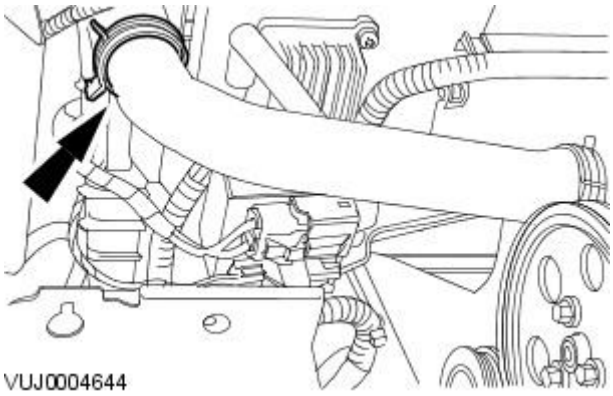

22. Connect the upper coolant hose onto the radiator.

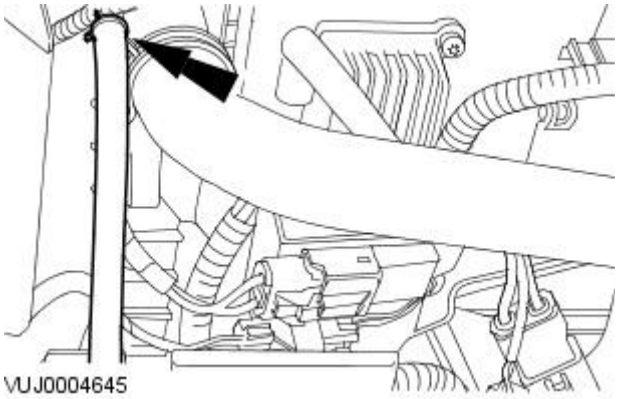

23. Connect the radiator vent hose onto the radiator.

All vehicles

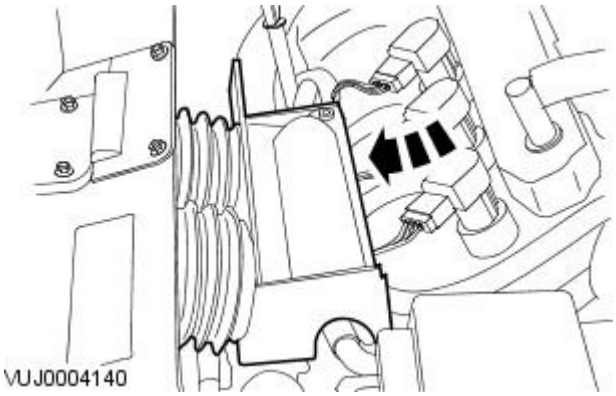

24. Install the air cleaner intake duct.

25. Install the air cleaner.
For additional information, refer to: Air Cleaner (303-12A Intake Air Distribution and Filtering - 2.0L NA V6 - AJV6/2.5L NA V6 - AJV6/3.0L NA V6 - AJ27, Removal and Installation).

26. Fill the cooling system.
For additional information, refer to: Cooling System Draining, Filling and Bleeding (303-03A Engine Cooling - 2.0L NA V6 - AJV6/2.5L NA V6 - AJV6/3.0L NA V6 - AJ27, General Procedures).

27. Check and adjust the power assisted steering fluid level.

Engine Cooling - 2.0L NA V6 - AJV6 / 2.5L NA V6 - AJV6 / 3.0L NA V6 - AJ27 - Radiator

Removal and Installation

Removal

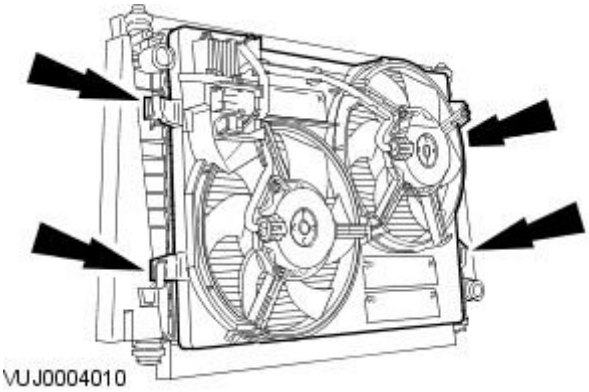

1. Remove the cooling module. For additional information, refer to Cooling Module.

2. CAUTION: Make sure that the retaining lugs of the radiator are not damaged when removing the cooling fan motor and shroud from the radiator.

Remove the cooling fan motor and shroud.

Installation

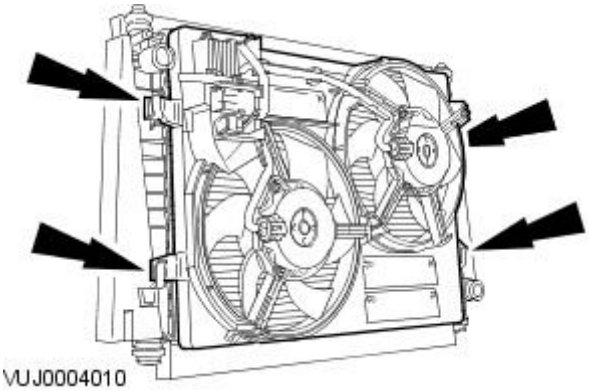

1. CAUTIONS:

Make sure that the retaining lugs of the radiator are not damaged when installing the cooling fan motor and shroud to the radiator.

The radiator isolator mountings are constructed from a special material. Use only the correct specification radiator isolator mountings.

Inspect the radiator isolator mountings for damage and fatigue. Install new radiator isolator mountings if required.

Inspect the radiator seals for damage and security. Install new radiator seals if required.

To install, reverse the removal procedure.

Engine Cooling - 2.0L NA V6 - AJV6 / 2.5L NA V6 - AJV6 / 3.0L NA V6 - AJ27 - Thermostat

Removal and Installation

Removal

1. Drain the cooling system. For additional information, refer to
   For additional information, refer to: Cooling System Draining, Filling and Bleeding (303-03A Engine Cooling - 2.0L NA V6 - AJV6/2.5L NA V6 - AJV6/3.0L NA V6 - AJ27, General Procedures).
   .
2. Detach the oil cooler coolant hose from the thermostat housing and position to one side.

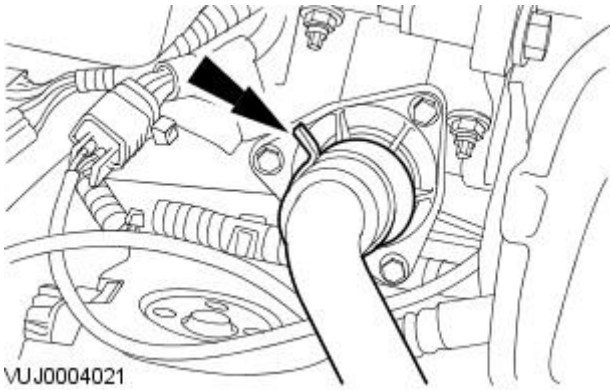

3. NOTE: The thermostat remains captive in the thermostat housing.

   Remove the thermostat.

   - Remove and discard the gasket.

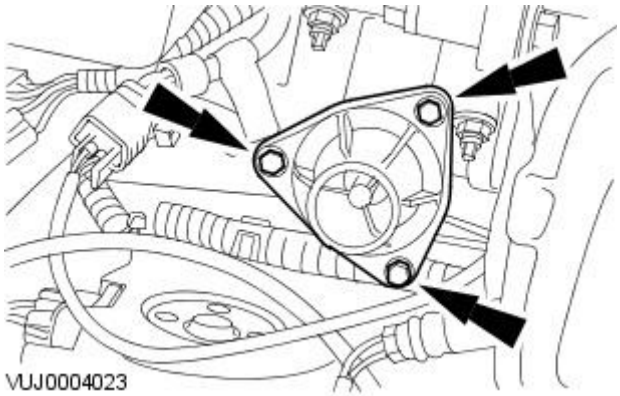

Installation

1. NOTE: Install a new gasket.

   To install, reverse the removal procedure.

   1. Tighten to 10 Nm.

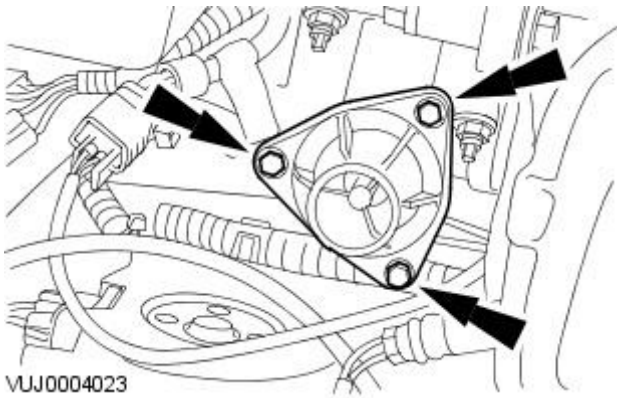

2. Fill the cooling system. For additional information, refer to
   For additional information, refer to: Cooling System Draining, Filling and Bleeding (303-03A Engine Cooling - 2.0L NA V6 - AJV6/2.5L NA V6 - AJV6/3.0L NA V6 - AJ27, General Procedures).
   .
3. NOTE: For NAS vehicles only.

   If required, carry out a long drive cycle.
   For additional information, refer to: Powertrain Control Module (PCM) Long Drive Cycle Self-Test (303-14A Electronic Engine Controls - 2.0L NA V6 - AJV6/2.5L NA V6 - AJV6/3.0L NA V6 - AJ27, General Procedures).

Engine Cooling - 2.0L NA V6 - AJV6 / 2.5L NA V6 - AJV6 / 3.0L NA V6 - AJ27 - Water Pump

Removal and Installation

Removal

1. Drain the cooling system. For additional information, refer to Cooling System Draining, Filling and Bleeding.
2. Lower the vehicle.
3. Remove the water pump belt. For additional information, refer to Section 303-05 Accessory Drive.
4. Remove the water pump drive pulley.

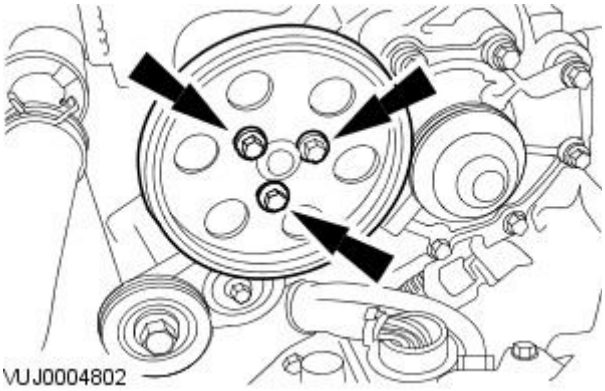

5. Remove the water pump.
   - Remove and discard the gasket.

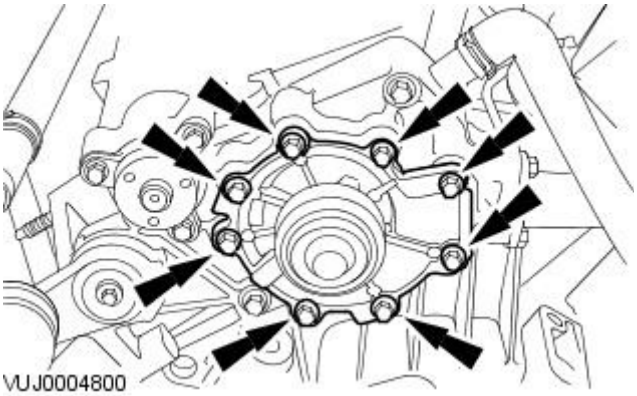

Installation

1. NOTE: Install a new gasket.

   To install, reverse the removal procedure.
   - Tighten to 10 Nm.

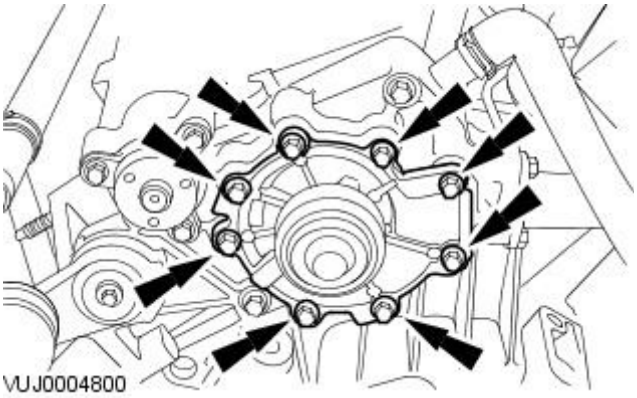

2. Tighten to 11 Nm.

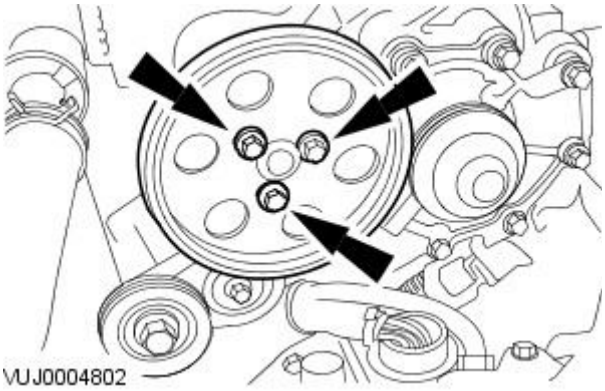

Engine Cooling - 2.0L NA V6 - AJV6 / 2.5L NA V6 - AJV6 / 3.0L NA V6 - AJ27 - Water Pump Housing

Removal and Installation

Removal

1. Drain the cooling system. For additional information, refer to Cooling System Draining, Filling and Bleeding.
2. Lower the vehicle.
3. Remove the water pump belt tensioner. For additional information, refer to Section 303-05 Accessory Drive.
4. Remove the left-hand valve cover. For additional information, refer to Section 303-01A EngineSection 303-01B Engine.
5. Remove the water pump drive pulley.

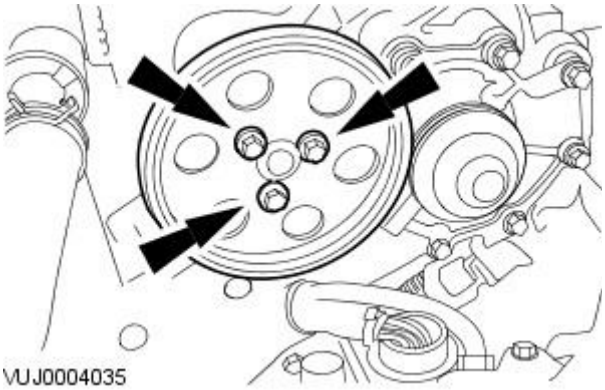

6. Detach the coolant expansion tank outlet hose from the water pump housing.

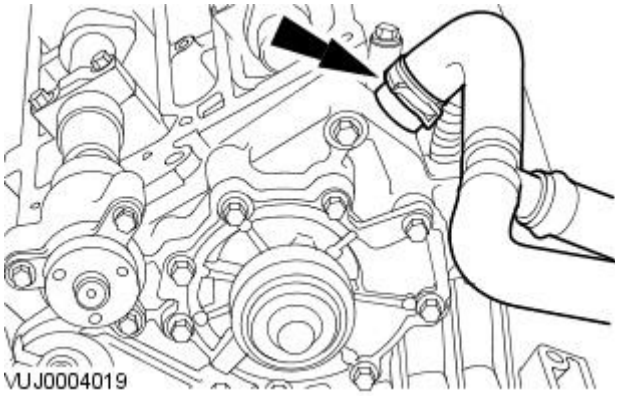

7. Remove the water pump coolant outlet pipe.
   - Remove and discard the seals.

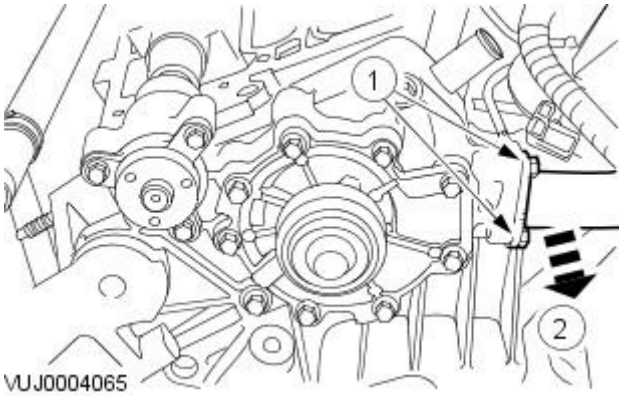

8. Detach the coolant inlet pipe from the water pump housing.
   - Remove and discard the gasket.

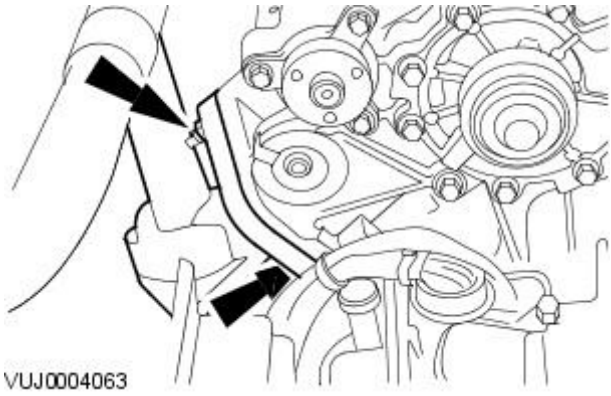

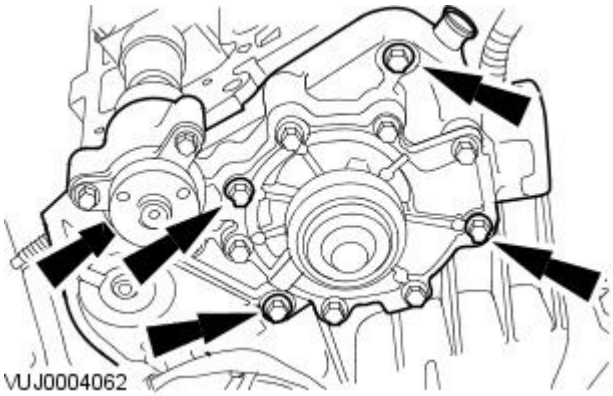

9. Remove the water pump housing.

- Remove and discard the gasket.

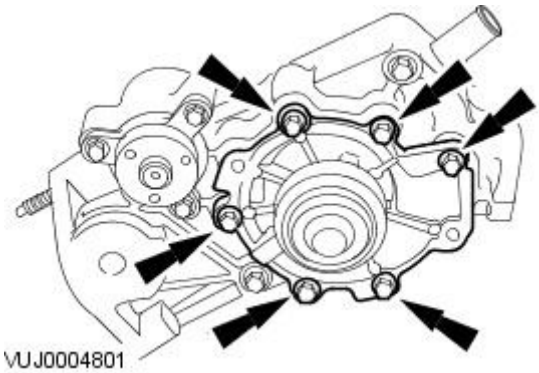

10. Remove the water pump from the water pump housing.

- Remove and discard the gasket from the water pump.

Installation

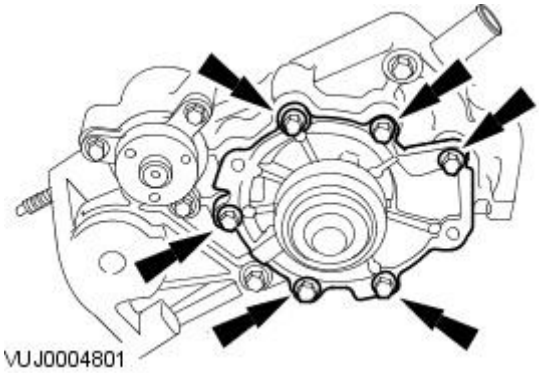

1. NOTE: Install a new gasket.

To install, reverse the removal procedure.

- Tighten to 10 Nm.

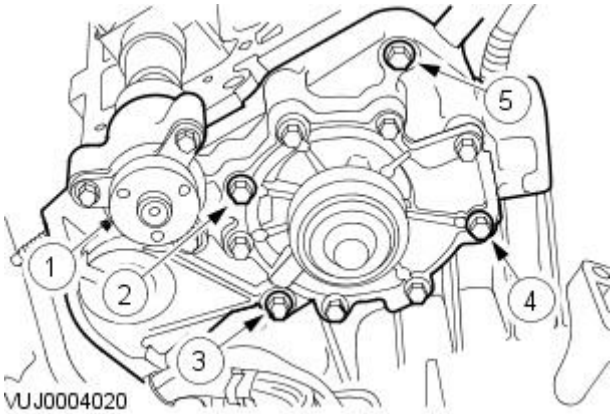

2. CAUTION: Make sure that the water pump housing is tightened in the sequence shown. Failure to follow this instruction may result in damage to the water pump drive pulley bearings.

• NOTE: Install a new gasket.

Tighten in the sequence shown to 10 Nm.

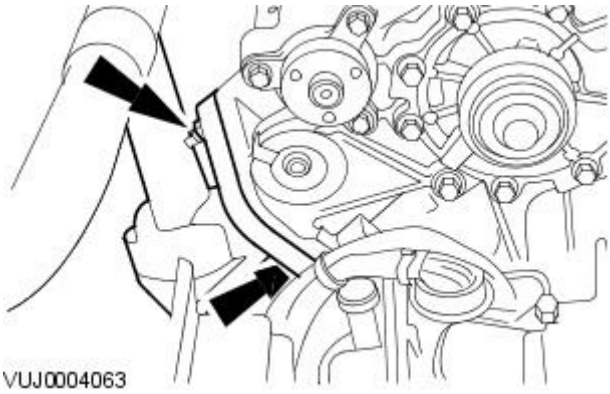

3. NOTE: Install a new gasket.

Tighten to 9 Nm.

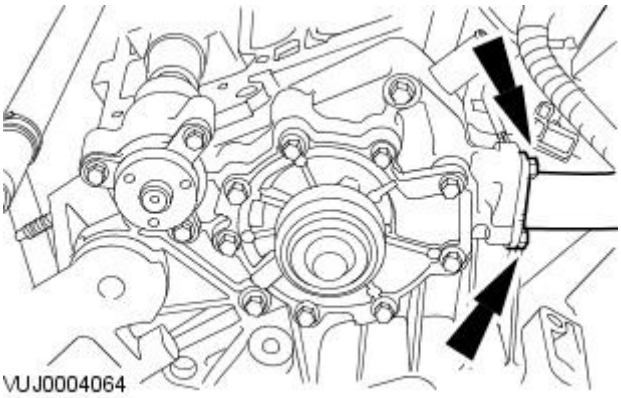

4. NOTE: Install new O-ring seals to the water pump coolant outlet pipe.

• NOTE: Prior to installation of the water pump outlet pipe, lubricate the O-ring seal of the water pump outlet pipe at the joint with the engine coolant inlet tube with lubricant ESE-M99B176-A.

Tighten to 12 Nm.

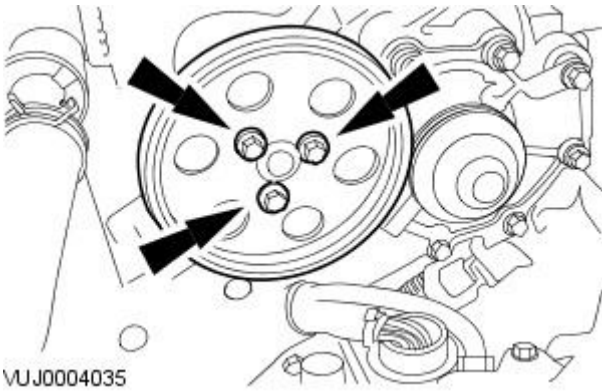

5. Tighten to 11 Nm.

6. Fill the cooling system. For additional information, refer to Cooling System Draining, Filling and Bleeding.

Published: 11-May-2011

Engine Cooling - 2.0L Duratorq-TDCi / 2.2L Duratorq-TDCi (110kW / 150PS) - Puma -

Fluids and Lubricants

Description	Specification
Jaguar Premium Cooling System Fluid	ESE-M97B44-A
Premium Cooling System Flush	EGR-M14P7-A
O-Ring Lubricant	ESE-M99B176-A

Cooling System Capacities

Engine	Capacity
2.0L & 2.2 Diesel	10.0L (initial fill)

Antifreeze

Specific Gravity (providing no other additive is in coolant)	Approximate percentage of Anti-Freeze (by volume)	Remains Fluid to	Solidifies at
1.061 at +15°C	50%	–25°C (–13°F)	–30°C (–22°F)

Cooling System Pressure Specification

Description	Pressure kpa (psi)
Radiator pressure test	138 kpa (20 PSI)
Coolant expansion tank cap release pressure	130 to 150kpa (18 to 21)

Torque Specifications

Description	Nm	lb-ft	lb-in
Radiator support bracket retaining bolts	25	18	
Thermostat housing retaining bolt x 1	23	17	-
Thermostat housing retaining bolts x 3	10	-	89
Water pump retaining bolts	23	17	-
Water pump cover	10	-	89
Water pump bleed screw	10	-	89
Engine oil temperature control thermostat retaining bolt	10	-	89

Engine Cooling - 2.0L Duratorq-TDCi / 2.2L Duratorq-TDCi (110kW / 150PS) - Puma - Engine Cooling

Description and Operation

• WARNINGS:

Never remove the coolant pressure cap under any circumstances while the engine is operating. Failure to follow this instruction may result in personal injury. To avoid having scalding hot coolant or steam blow out of the cooling system, use extreme care when removing the coolant pressure cap from a hot cooling system. Wait until the engine has cooled, then wrap a thick cloth around the coolant pressure cap and turn it slowly until the pressure begins to release. Step back while the pressure is released from the system. When certain all the pressure has been released (still with a cloth) turn and remove the coolant pressure cap from the coolant expansion tank. Failure to follow these instructions may result in personal injury.

Remove fuses 40 and 16 from the engine compartment fuse box prior to performing any under hood service in the area of the cooling fans when the engine is hot, since the cooling fan motors could operate if the engine has been switched off. Failure to follow this instruction may result in personal injury.

CAUTION: The engine cooling system must be maintained with the correct concentration and type of anti-freeze solution to prevent corrosion and frost damage. Failure to follow this instruction may result in damage to the engine.

Vehicles with diesel engine

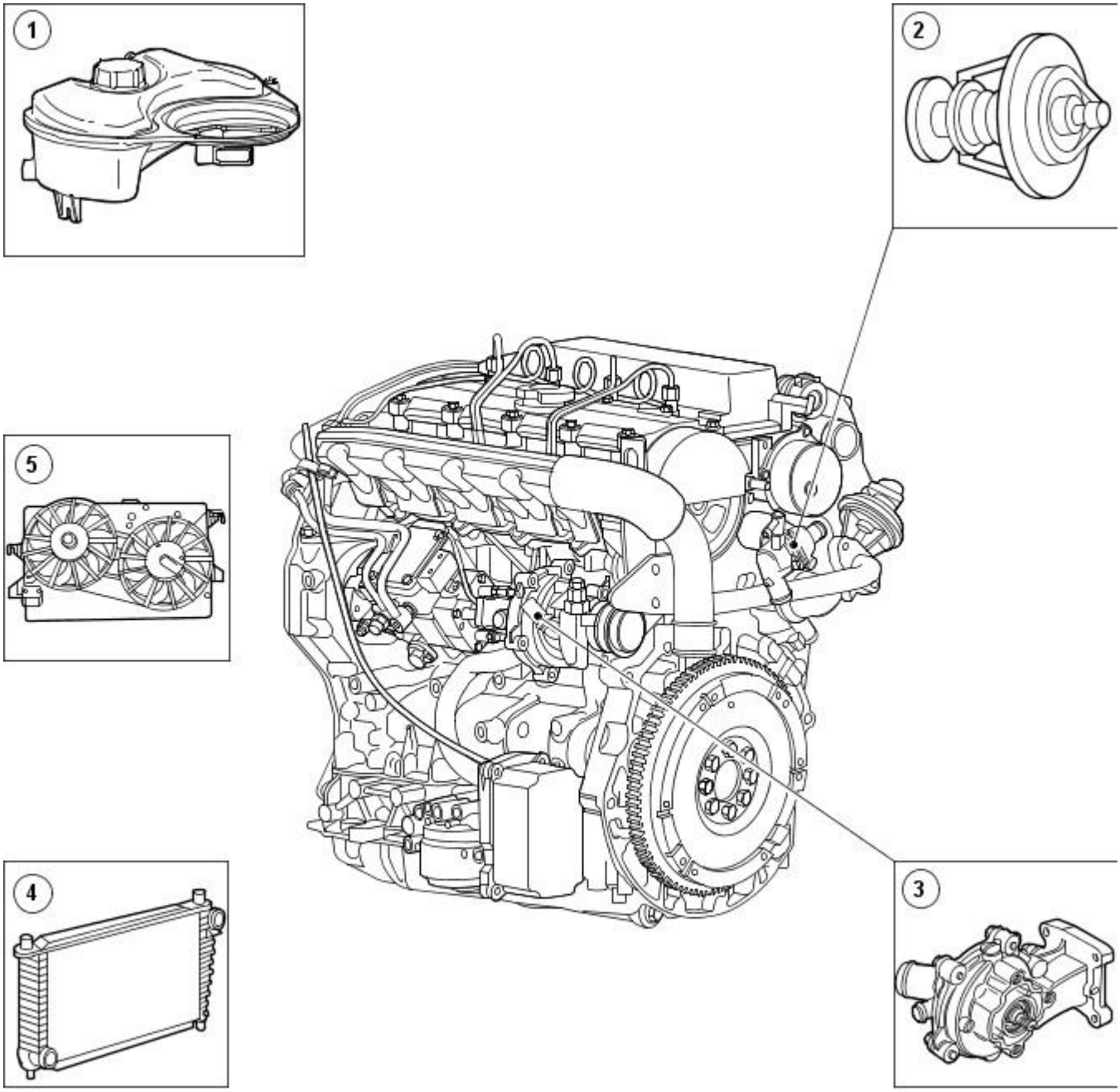

E45775

Item	Part Number	Description
1	-	Coolant expansion tank
2	-	Thermostat
3	-	Water pump
4	-	Radiator
5	-	Cooling fan motor and shroud

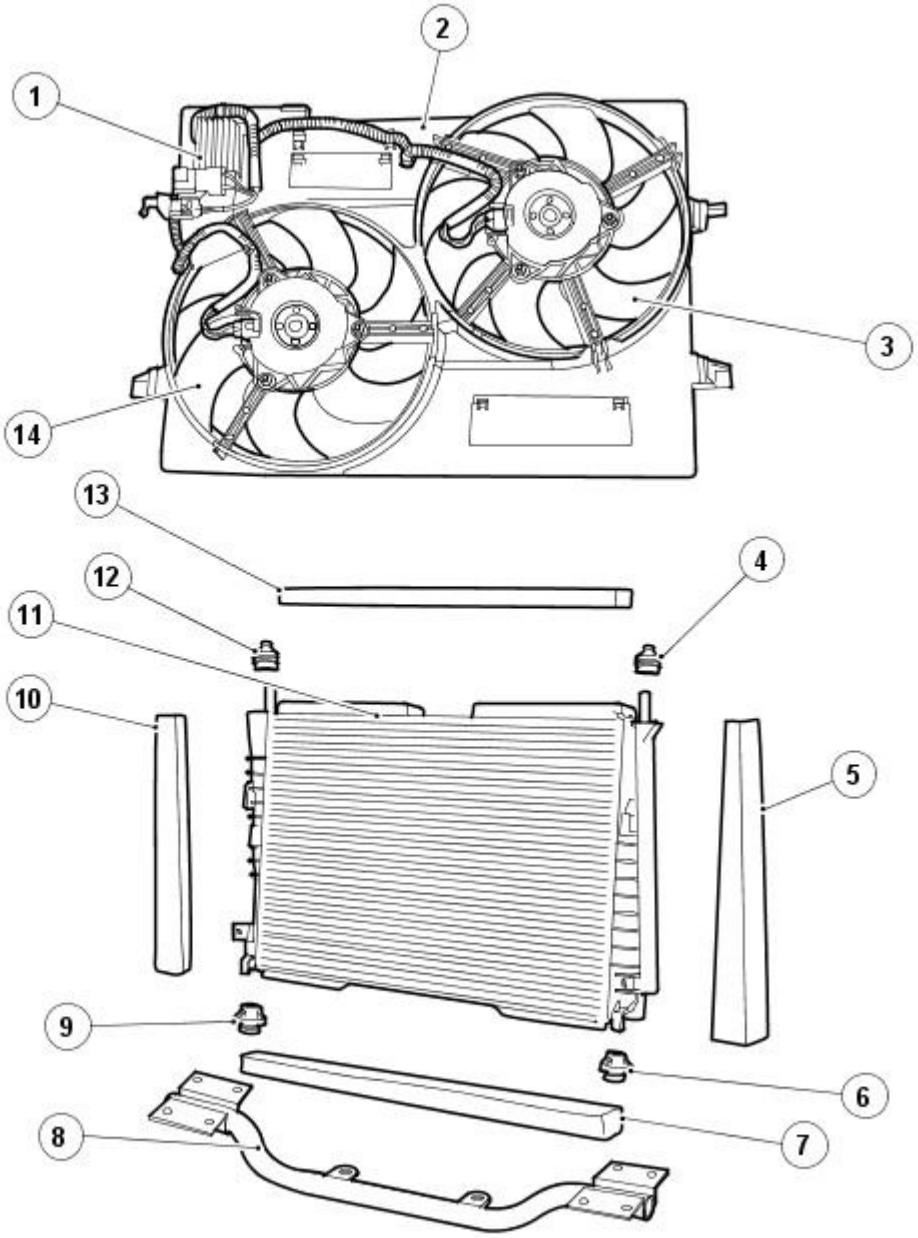

E45776

Item	Part Number	Description
1	-	Cooling module
2	-	Cooling fan motor and shroud
3	-	Cooling fan
4	-	Radiator upper isolator mounting
5	-	Radiator side seal
6	-	Radiator lower isolator mounting
7	-	Radiator lower seal
8	-	Radiator support beam
9	-	Radiator lower isolator mounting
10	-	Radiator side seal
11	-	Radiator
12	-	Radiator upper isolator mounting
13	-	Radiator upper seal
14	-	Cooling fan

The cooling system consists of a:

- water pump.
- thermostat.
- radiator.
- coolant expansion tank.
- coolant pressure cap.
- two electric cooling fans.
- cooling module.
- engine oil cooler.
- engine oil temperature control thermostat.

Water Pump

The water pump is mounted directly to the cylinder block at the transmission-end of the engine. The water pump is directly driven by the power steering pump.

Thermostat

The thermostat is located in the thermostat housing which is bolted to the cylinder head and allows rapid engine warm-up by restricting coolant flow through the radiator below 88°C (190°F). The thermostat also assists in keeping the engine operating temperature within predetermined limits. The thermostat begins to open at 88°C (190°F) and is fully open at 102°C (216°F).

When the engine is cold and the thermostat is closed, coolant flows from the water pump through the engine. It then returns to the water pump through the upper coolant hose.

When the engine is warm and the thermostat is open, coolant flows into the radiator through the upper coolant hose. It then returns to the water pump from the radiator through the lower coolant hose and engine oil cooler.

The heater core is on a parallel circuit and is unaffected by the position of the thermostat.

Radiator

The radiator is of aluminium construction with plastic end tanks. Foam seals are fitted to the radiator to prevent the cooling air from by passing the radiator core. The radiator is located by four isolator mountings and supported by the radiator support beam. A coolant drain plug is provided in the lower coolant hose for the draining of the cooling system. The cooling fan motor and shroud is attached to the radiator via retaining clips.

Electric Cooling Fans

Two variable speed electric cooling fans are housed in the cooling fan shroud for the cooling of the radiator. The speed of the electric cooling fans is adjusted by the cooling fan control module, which is controlled by the engine control module (ECM).

The ECM determines the cooling fan speed by receiving inputs from the cylinder head temperature (CHT) sensor. The ECM sends a variable pulse width modulated (PWM) signal to the cooling fan control module to operate the cooling fans at the required speed. The cooling fans are operated at slow speed when the engine coolant temperature is at 95°C (203°F) and are operated at full speed when the engine coolant temperature is at 105°C (221°F). A coolant temperature between these temperatures will cause the cooling fans to be operated at a speed which is proportional to the engine coolant temperature.

When the engine is running with the CHT above 100°C (212°F), if the ignition switch is turned to the **OFF** position the cooling fans will continue to operate for a time which is determined by the ECM.

If the PWM signal from the ECM to the cooling fan control module is between 7% and 95% the cooling fan control module will operate the cooling fans at the required speed. If the PWM signal from the ECM to the cooling fan control module is below 3% and above 95% the cooling fan control module will operate the cooling fans at maximum speed. If the PWM signal from the ECM to the cooling fan control module is between 3% and 7% the cooling fans will not operate.

Coolant Recovery System

A pressurized coolant expansion tank system is used which continuously separates the air from the cooling system and replenishes the system through the coolant expansion tank outlet hose, attached to the heater return hose.

A continuous vent from the engine and radiator to the coolant expansion tank prevents air locks from forming in the cooling system.

The coolant expansion tank serves as the location for:

- service filling.
- coolant expansion during warm-up.
- air separation during operation.
- system pressurization by the coolant pressure cap.

Engine Oil Cooler

The engine oil cooler is a oil to water type. The oil cooler is mounted to the oil filler housing an sealed with two O-ring seals.

The coolant supply for the engine oil cooler is through the radiator bottom hose.

Engine oil cooler thermostat

The engine oil cooler thermostat is located in the water pump housing and helps to reduce the warm-up time by limiting the coolant flow through the lubrication system until the engine reaches it's optimum operating temperature. The engine oil cooler thermostat starts to open at 75°C (167°F) and is fully open at 89°C (192°F).

Engine Cooling - 2.0L Duratorq-TDCi/2.2L Duratorq-TDCi (110kW/150PS) - Puma - Cooling System Draining, Filling and Bleeding

General Procedures

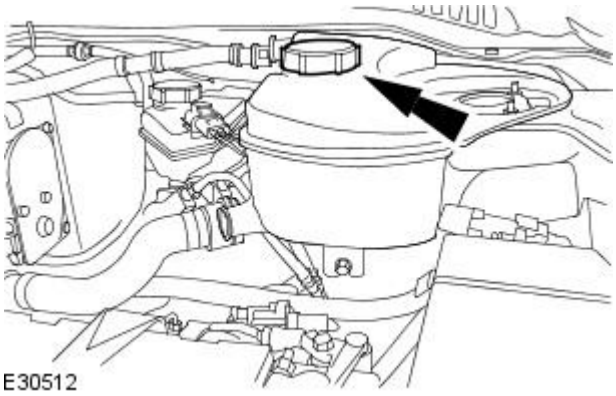

1. WARNING: When releasing the cooling system pressure, cover the expansion tank cap with a thick cloth to prevent the possibility of scalding. Failure to follow this instruction may result in personal injury.

• NOTE: Release the cooling system pressure by slowly turning the coolant expansion tank cap a quarter of a turn.

Remove the coolant expansion tank cap.

2. Remove the radiator splash shield.
For additional information, refer to: Radiator Splash Shield (501-02 Front End Body Panels, Removal and Installation).

3. Drain the cooling system.

- Allow the coolant to drain into a suitable container.

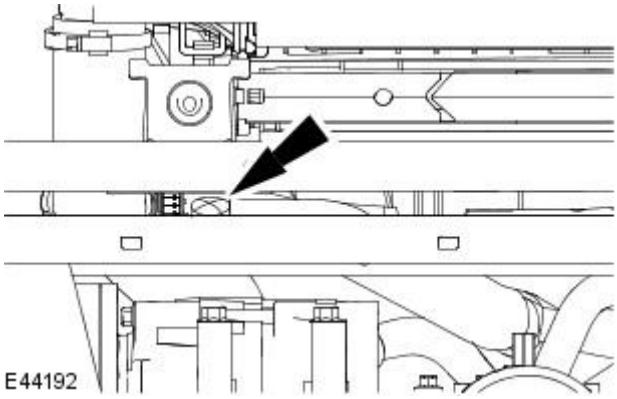

4. Install the radiator drain plug.

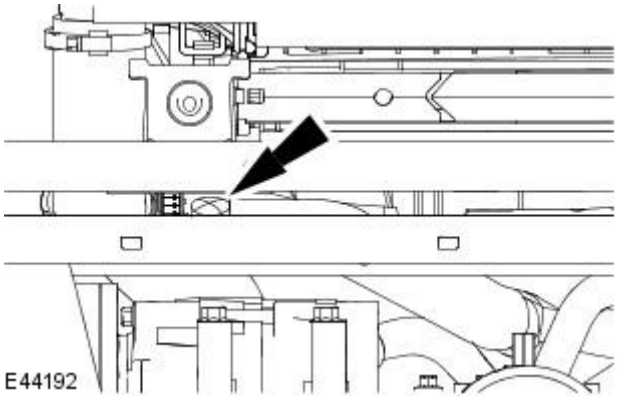

5. Install the radiator splash shield.
For additional information, refer to: Radiator Splash Shield (501-02 Front End Body Panels, Removal and Installation).

6. Remove the air cleaner assembly.
For additional information, refer to: Air Cleaner (303-12B Intake Air Distribution and Filtering - 2.0L Duratorq-TDCi/2.2L Duratorq-TDCi (110kW/150PS) - Puma, Removal and Installation).

7. Detach the wiring harness.

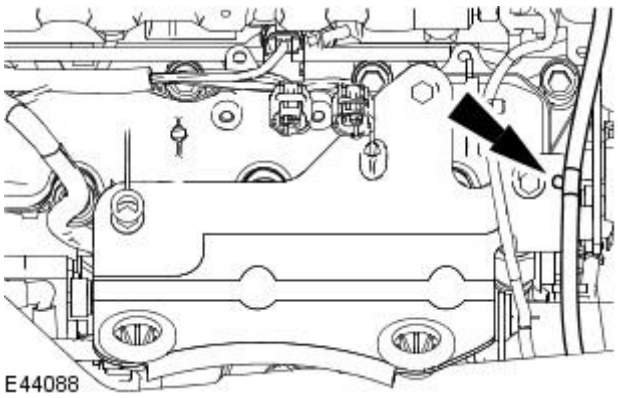

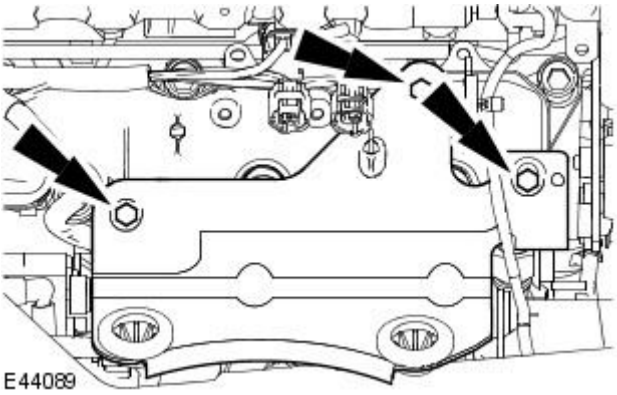

8. Remove the air cleaner mount bracket.

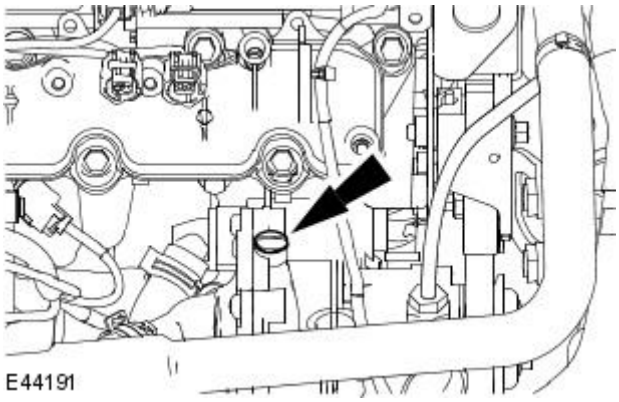

9. Loosen the cooling system air bleed screw.

10. Fill the coolant expansion tank until coolant emerges from the cooling system air bleed screw.

11. Tighten the cooling system air bleed screw.

- Tighten to 10 Nm.

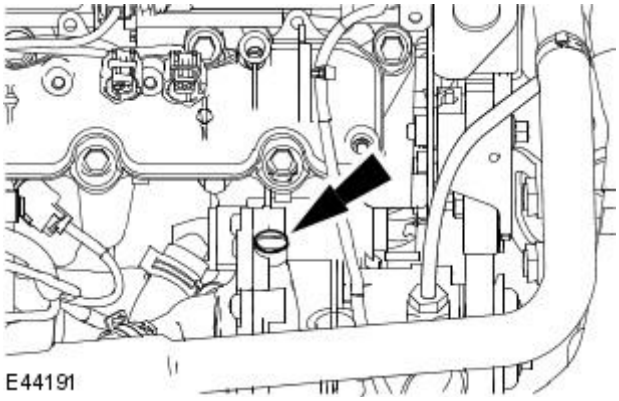

12. CAUTION: The engine cooling system must be maintained with the correct concentration and type of anti-freeze solution to prevent corrosion and frost damage.

Fill the coolant expansion tank to the **Max** mark.

13. Install the air cleaner mount bracket.

- Tighten the retaining bolts.

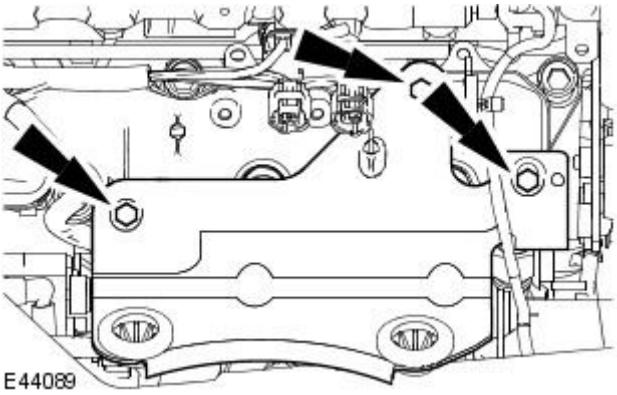

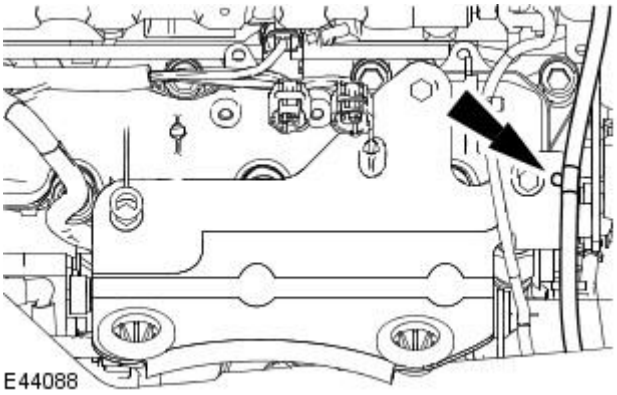

14. Attach the wiring harness.

15. Install the air cleaner assembly.
For additional information, refer to: Air Cleaner (303-12B Intake Air Distribution and Filtering - 2.0L Duratorq-TDCi/2.2L Duratorq-TDCi (110kW/150PS) - Puma, Removal and Installation).

16. Start the engine and maintain an engine speed of 1500 revolutions per minute (RPM) for 20 seconds.

17. Switch the engine off.

18. Fill the coolant expansion tank to 15mm above the **MAX** mark.

19. Install the coolant expansion tank cap.

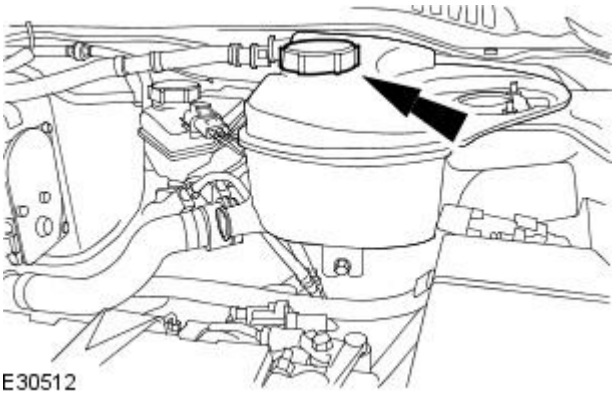

20. Start the engine, allow the engine to idle for a two minutes.

21. CAUTION: Observe the engine temperature gauge. If the engine starts to over-heat switch off immediately and allow to cool. Failure to follow this instruction may cause damage to the vehicle.

Raise the engine speed to 3000 RPM and maintain at 3000 RPM until the engine cooling fan operates, while observing the engine temperature gauge.

22. CAUTION: Observe the engine temperature gauge. If the engine starts to over-heat switch off immediately and allow to cool. Failure to follow this instruction may cause damage to the vehicle.

Allow the engine to idle for a further five minutes.

23. Switch off the engine.

24. Allow the engine to cool.

25. Remove the coolant expansion tank cap.

26. CAUTION: The engine cooling system must be maintained with the correct concentration and type of anti-freeze solution to prevent corrosion and frost damage.

Fill the coolant expansion tank to the **Max** mark.

27. Install the coolant expansion tank cap.

Engine Cooling - 2.0L Duratorq-TDCi/2.2L Duratorq-TDCi (110kW/150PS) - Puma - Cooling System Draining and Vacuum Filling

General Procedures

WARNING: To avoid having scalding hot coolant or steam blowing out of the cooling system, use extreme care when removing the coolant pressure cap from a hot cooling system. Wait until the engine has cooled, then wrap a thick cloth around the coolant pressure cap and turn it slowly until the pressure begins to release. Step back while the pressure is released from the system. When certain all the pressure has been released (still with a cloth) turn and remove the coolant pressure cap from the coolant expansion tank. Failure to follow these instructions may result in personal injury.

• CAUTIONS:

The engine cooling system must be maintained with the correct concentration and type of anti-freeze solution to prevent corrosion and frost damage. Failure to follow this instruction may result in damage to the vehicle.

Engine coolant will damage the paint finished surfaces. If spilt, immediately remove the coolant and clean the area with water.

Do not run the engine without first making sure the engine cooling fans operate. Start the engine, set air conditioning (A/C) to maximum cold, set the blower motor to maximum and observe that the engine cooling fan operates. Failure to follow this instruction may cause damage to the engine.

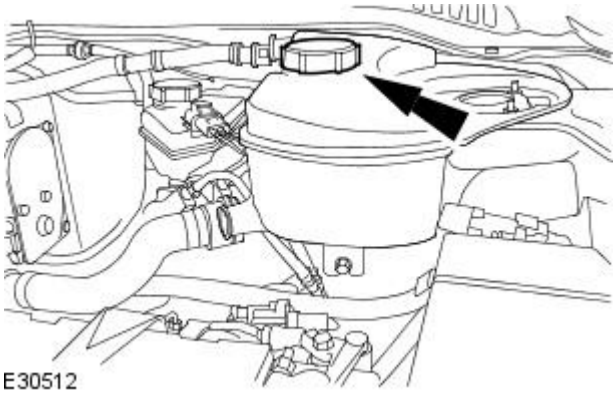

1. Set the heater controls to maximum HOT.

2. WARNING: Relieve the cooling system pressure by unscrewing the coolant pressure cap. Failure to follow this instruction may result in personal injury.

CAUTION: Do not RUN the engine with the coolant pressure cap removed. Failure to follow this instruction may cause damage to the engine.

Remove the coolant expansion tank pressure cap.

3. Remove the radiator splash shield.
For additional information, refer to: Radiator Splash Shield (501-02 Front End Body Panels, Removal and Installation).

4. NOTE: Remove and discard the radiator drain plug O-ring seal.

Remove the coolant drain plug.

- Drain the coolant into a suitable container.

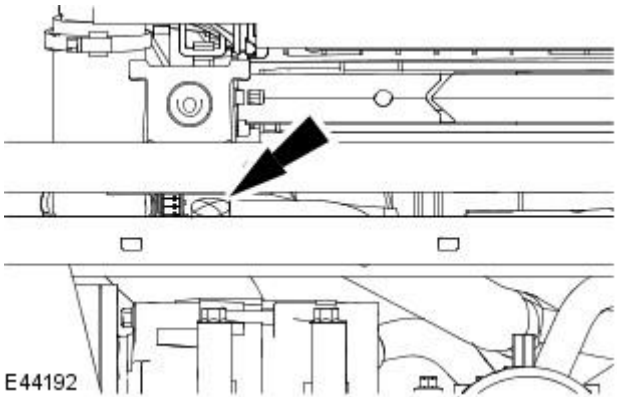

5. CAUTION: Do not over tighten the drain plug. Failure to follow this instruction may result in damage to the vehicle.

• NOTE: Install a new O-ring seal.

Install the coolant drain plug.

- Tighten to 1 Nm.
- Remove the drain tray.

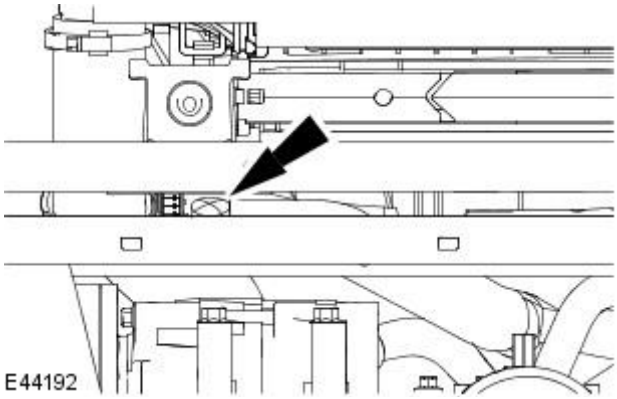

6. Lower the vehicle.

7. Install the cooling system vacuum refill adaptor to the expansion tank.

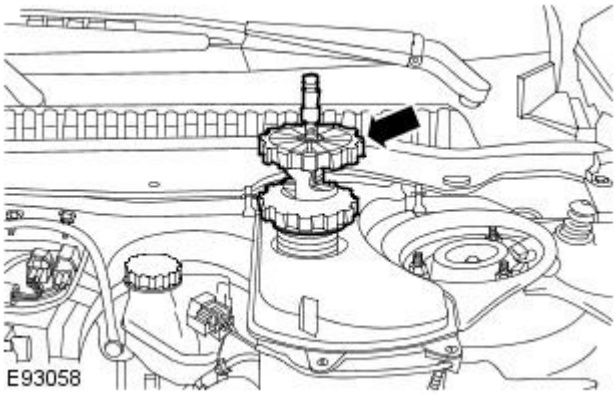

8. Install the vacuum filler gauge to the cooling system vacuum refill adaptor.

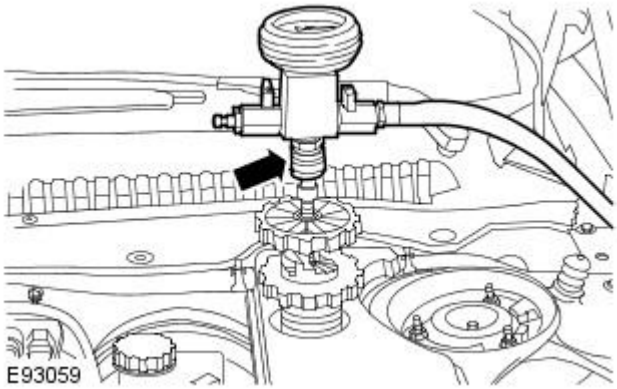

9. Install the venturi tube assembly to the vacuum filler gauge.

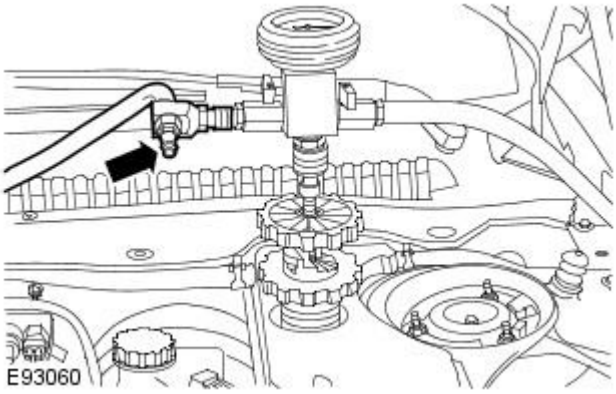

10. NOTE: Make sure that both valves are in the closed position on the vacuum filler gauge assembly.

• NOTE: The coolant vacuum fill tool needs an air pressure of 6 to 8 bar (87 to 116 psi) to operate correctly.

• NOTE: Small diameter or long airlines may restrict airflow to the coolant vacuum fill tool.

Connect a regulated compressed air supply to the venturi tube assembly.

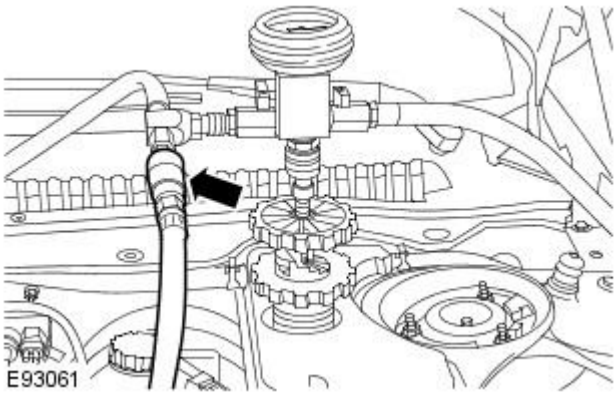

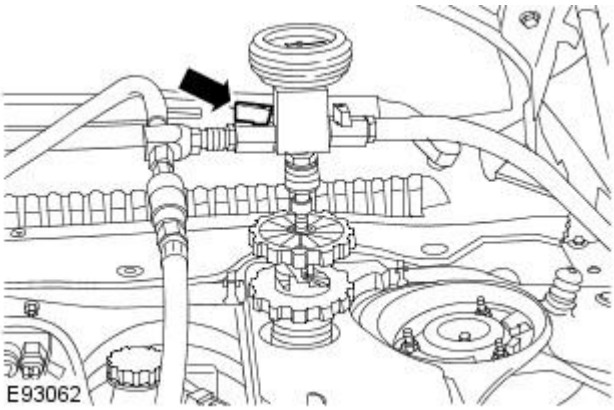

11. Open the air supply valve.

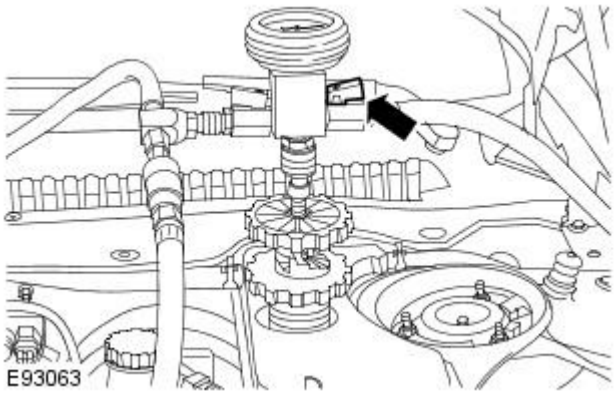

12. NOTE: Make sure the coolant supply hose is positioned into a container of fifty percent mixture of Jaguar Premium Cooling System Fluid or equivalent, meeting Jaguar specification WSS M97B44-D and fifty percent water. Make sure no air can enter the coolant supply hose.

Open the coolant supply valve for 2 seconds to prime the coolant supply hose.

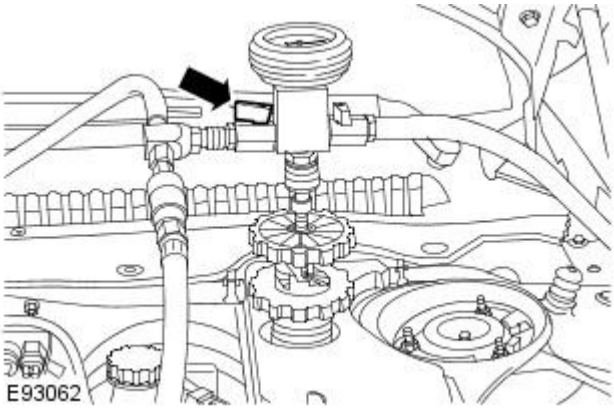

13. Apply air pressure progressively until the arrow on the vacuum filler gauge reaches the green segment.

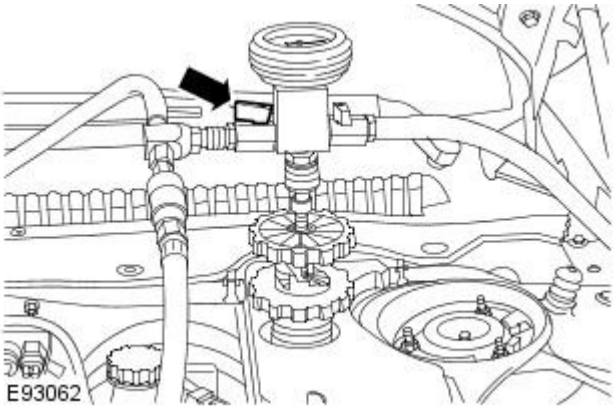

14. Close the air supply valve.

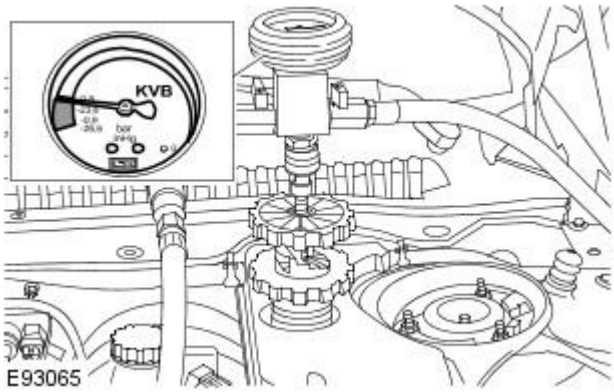

15. Allow one minute to check the vacuum is held.

- Disconnect the air supply.

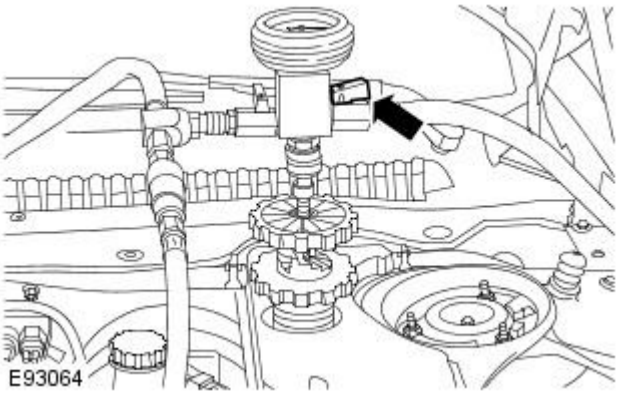

16. NOTE: Close the coolant supply valve when the coolant expansion tank MAX mark is reached or coolant movement has ceased.

Open the coolant supply valve and allow the coolant to be drawn into the system.

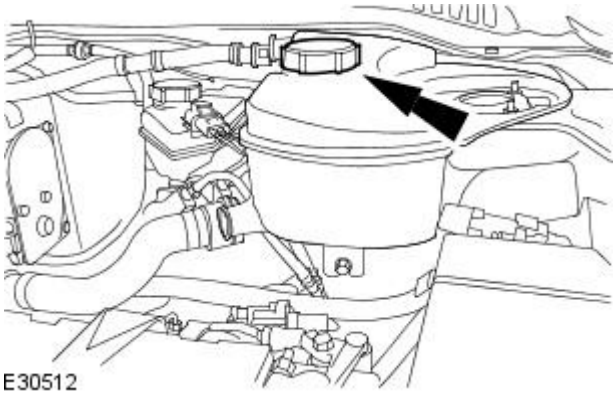

17. Remove the vacuum filler gauge and cooling system vacuum refill adaptor assembly.

18. Install the coolant expansion tank pressure cap.

19. Set the heating system to the COLD position.

20. Start the engine, allow the engine to idle for a two minutes.

21. NOTE: During this procedure the thermostat should open.

Raise the engine speed to 3000 RPM and maintain until the engine cooling fan operates.

22. Allow the engine to idle for a further five minutes.

23. Switch the engine OFF and allow to cool.

24. WARNING: To avoid having scalding hot coolant or steam blow out of the cooling system, use extreme care when removing the coolant pressure cap from a hot cooling system. Wait until the engine has cooled, then wrap a thick cloth around the coolant pressure cap and turn it slowly until the pressure begins to release. Step back while the pressure is released from the system. When certain all the pressure has been released (still with a cloth) turn and remove the coolant pressure cap from the coolant expansion tank. Failure to follow these instructions may result in personal injury.

After two minutes, release the cooling system pressure.

- Remove the coolant expansion tank pressure cap.

25. Check and top-up the coolant if required.

26. Raise the vehicle.

27. Check for coolant leaks.

28. Install the radiator splash shield.
For additional information, refer to: Radiator Splash Shield (501-02 Front End Body Panels, Removal and Installation).

Engine Cooling - 2.0L Duratorq-TDCi/2.2L Duratorq-TDCi (110kW/150PS) - Puma - Cooling Fan Motor and Shroud

Removal and Installation

Removal

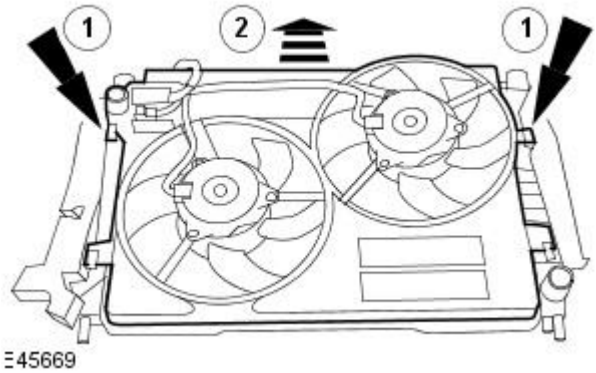

1. Remove the cooling module.
   For additional information, refer to: Cooling Module (303-03B Engine Cooling - 2.0L Duratorq-TDCi/2.2L Duratorq-TDCi (110kW/150PS) - Puma, Removal and Installation).
2. Remove the cooling fan motor and shroud assembly.
   1. Release the retaining tangs.
   2. Remove the cooling fan motor and shroud assembly.

Installation

1. To install, reverse the removal procedure.

Engine Cooling - 2.0L Duratorq-TDCi/2.2L Duratorq-TDCi (110kW/150PS) - Puma - Cooling Module

Removal and Installation

Special Tool(s)	
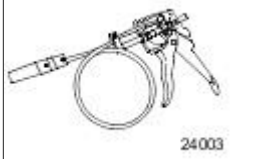	Remover/installer, cooling hose clamp. 303-397

Removal

1. Remove the battery tray.
   For additional information, refer to: Battery Tray (414-01 Battery, Mounting and Cables, Removal and Installation).
2. Carry out the air conditioning (A/C) system recovery procedure.
   For additional information, refer to: Air Conditioning (A/C) System Recovery, Evacuation and Charging (412-00 Climate Control System - General Information, General Procedures).
3. Carry out the cooling system drain procedure.
   For additional information, refer to: Cooling System Draining, Filling and Bleeding (303-03B Engine Cooling - 2.0L Duratorq-TDCi/2.2L Duratorq-TDCi (110kW/150PS) - Puma, General Procedures).
4. Lower the vehicle.
5. Detach the radiator vent hose.

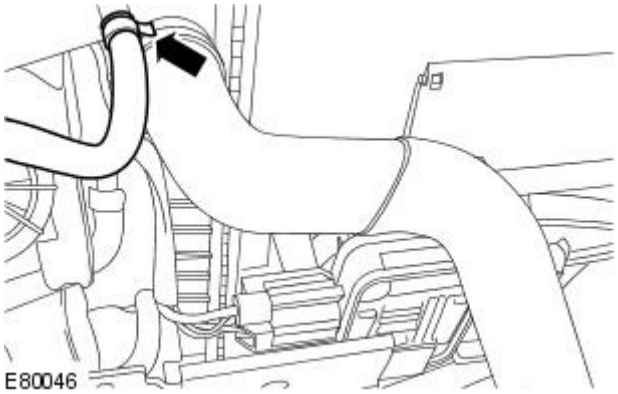

6. Detach the radiator upper coolant hose.

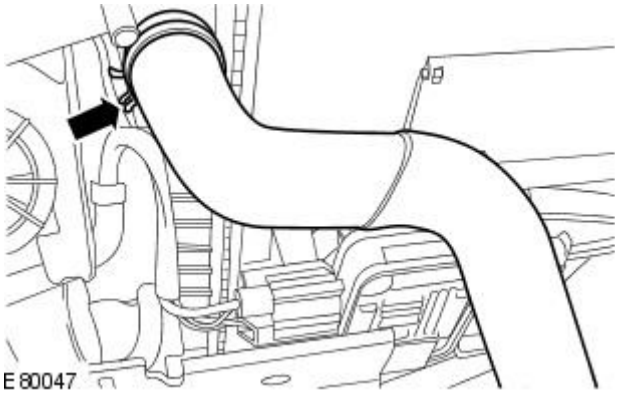

7. Disconnect the electrical connector.

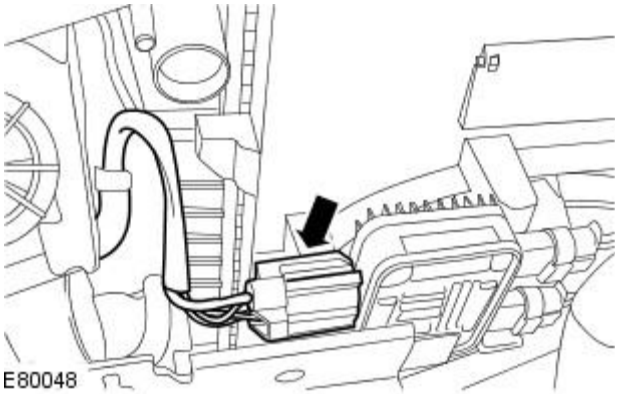

8. Remove the charge air cooler.
   For additional information, refer to: Charge Air Cooler - 2.0L Duratorq-TDCi (303-12B Intake Air Distribution and Filtering - 2.0L Duratorq-TDCi/2.2L Duratorq-TDCi (110kW/150PS) - Puma, Removal and

Installation) /
Charge Air Cooler - 2.2L Duratorq-TDCi (110kW/150PS) - Puma (303-12B Intake Air Distribution and Filtering - 2.0L Duratorq-TDCi/2.2L Duratorq-TDCi (110kW/150PS) - Puma, Removal and Installation).

9. Disconnect the radiator lower coolant hose.

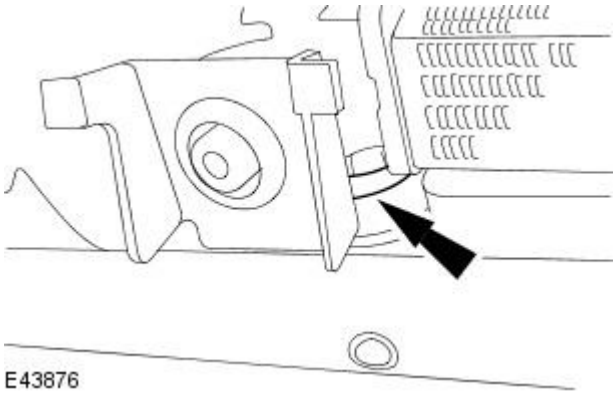

10. NOTE: Install blanking plugs to the exposed ports.

Disconnect the A/C lines.

- Remove and discard the O-ring seals.

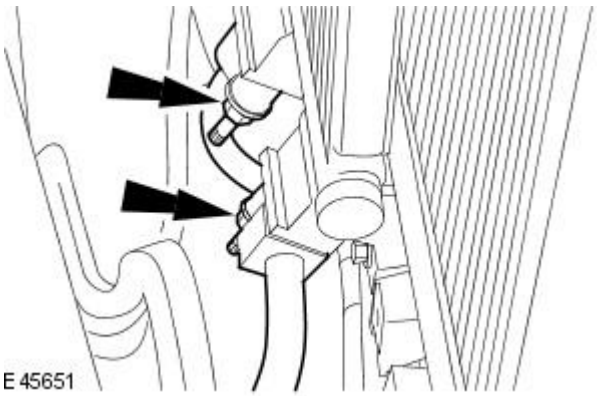

11. WARNING: Using an assistant support the cooling module. Failure to follow this instruction may result in personal injury.

• NOTE: Left-hand shown, right-hand similar.

Using an assistant, remove the radiator support beam.

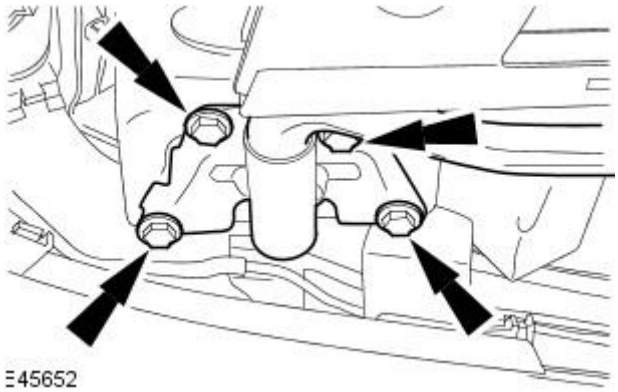

12. WARNING: Using an assistant, remove the cooling module. Failure to follow this instruction may result in personal injury.

CAUTION: Make sure that the radiator and the air conditioning condenser are not damaged during the removal of the cooling module. Failure to follow this instruction may result in damage to the vehicle.

Using an assistant, remove the cooling module.

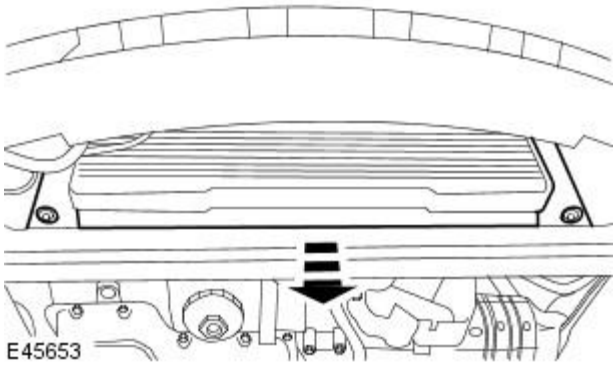

Installation

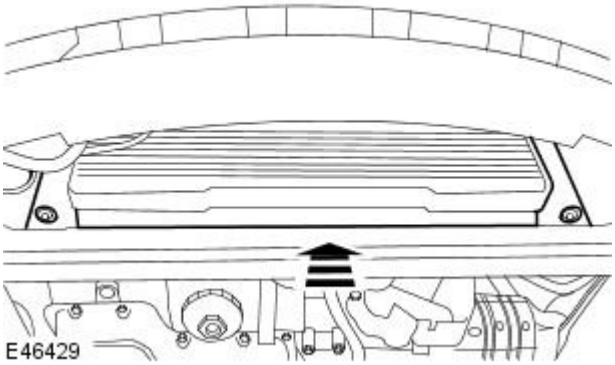

1. WARNING: Using an assistant, install the cooling module. Failure to follow this instruction may result in personal injury.

CAUTION: Make sure that the radiator and the air conditioning condenser are not damaged during the installation of the cooling module.

Using an assistant, install the cooling module.

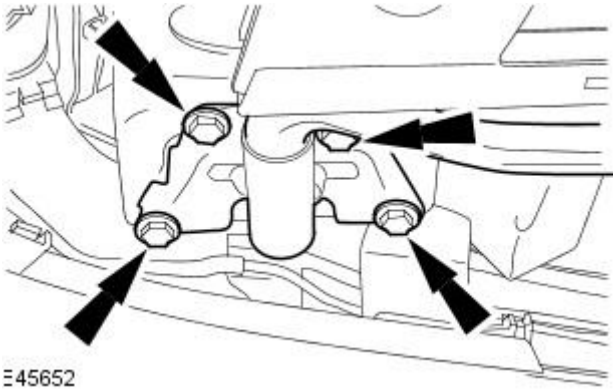

2. WARNING: Using an assistant support the cooling module. Failure to follow this instruction may result in personal injury.

• NOTE: Left-hand shown, right-hand similar.

Using an assistant, install the radiator support beam.

- Tighten to 25 Nm.

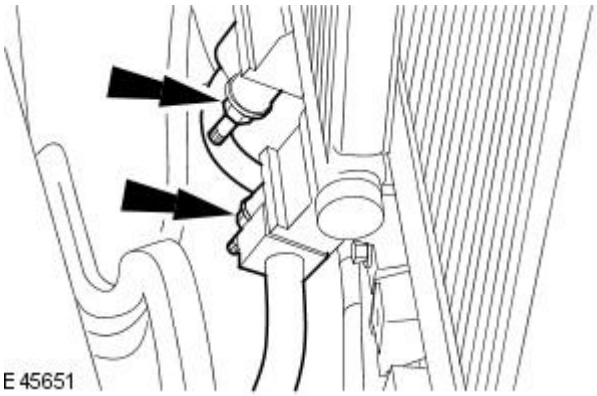

3. NOTE:

• NOTE: Remove the blanking plugs.

Connect the A/C lines.

- Install new O-ring seals.
- Tighten to 25 Nm.

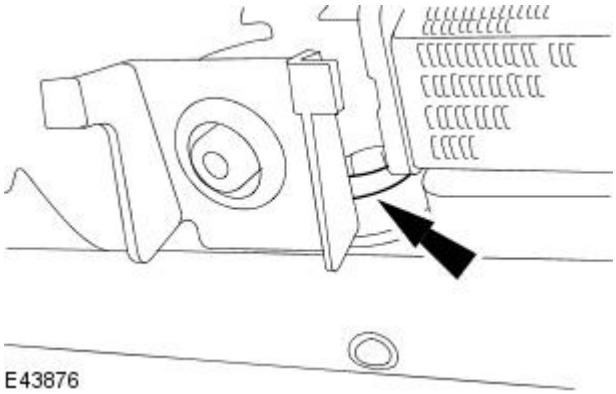

4. Connect the radiator lower coolant hose.

5. Install the charge air cooler.
For additional information, refer to: Charge Air Cooler - 2.0L Duratorq-TDCi (303-12B Intake Air Distribution and Filtering - 2.0L Duratorq-TDCi/2.2L Duratorq-TDCi (110kW/150PS) - Puma, Removal and Installation) / Charge Air Cooler - 2.2L Duratorq-TDCi (110kW/150PS) - Puma (303-12B Intake Air Distribution and Filtering - 2.0L Duratorq-TDCi/2.2L Duratorq-TDCi (110kW/150PS) - Puma, Removal and Installation).

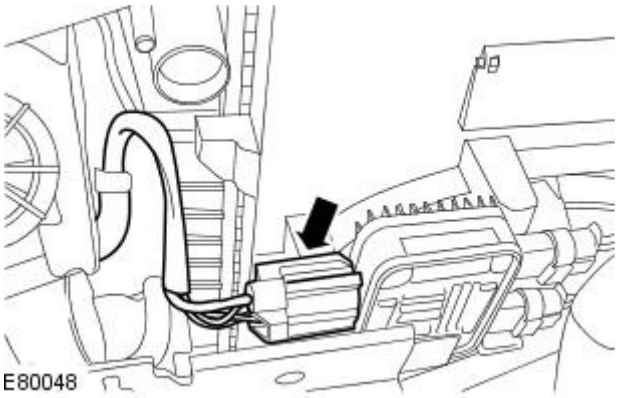

6. Connect the electrical connector.

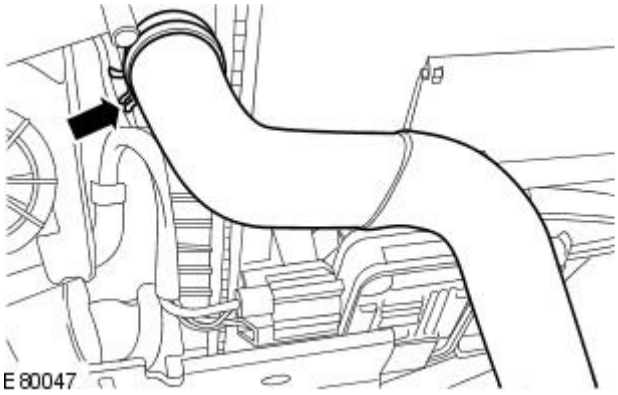

7. Connect the radiator upper coolant hose.

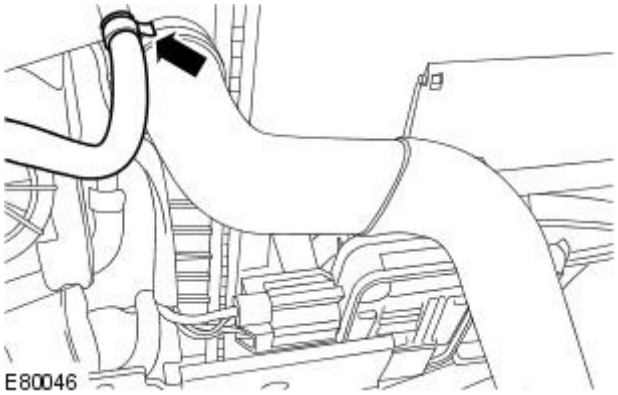

8. Connect the radiator vent hose.

9. Install the battery tray.
For additional information, refer to: Battery Tray (414-01 Battery, Mounting and Cables, Removal and Installation).

10. Carry out the cooling system filling and bleeding procedure.
For additional information, refer to: Cooling System Draining, Filling and Bleeding (303-03B Engine Cooling - 2.0L Duratorq-TDCi/2.2L Duratorq-TDCi (110kW/150PS) - Puma, General Procedures).

11. Carry out the A/C system evacuation and charging procedure.
For additional information, refer to: Air Conditioning (A/C) System Recovery, Evacuation and Charging (412-00 Climate Control System - General Information, General Procedures).

Published: 11-May-2011

Engine Cooling - 2.0L Duratorq-TDCi/2.2L Duratorq-TDCi (110kW/150PS) - Puma - Radiator

Removal and Installation

Removal

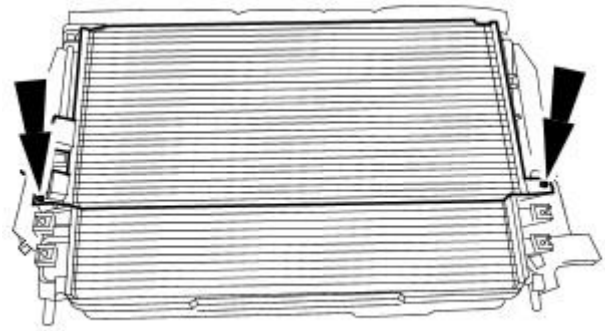

E45681

1. Remove the cooling fan motor and shroud.
   For additional information, refer to: Cooling Fan Motor and Shroud (303-03B Engine Cooling - 2.0L Duratorq-TDCi/2.2L Duratorq-TDCi (110kW/150PS) - Puma, Removal and Installation).
2. Remove the radiator.

Installation

1. To install, reverse the removal procedure.

Published: 11-May-2011

Engine Cooling - 2.0L Duratorq-TDCi / 2.2L Duratorq-TDCi (110kW / 150PS) - Puma - Water Pump

Removal and Installation

Special Tool(s)	
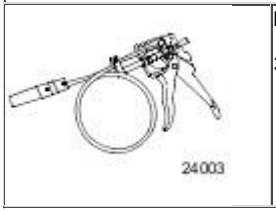	Remover/Installer, Cooling Hose Clamp 303-397 (24-003)

Materials

Name	Specification
Grease	WSS-M12A4-A2

Removal

Vehicles with 2.2L diesel engine

1. Remove the exhaust gas recirculation (EGR) tube.
   For additional information, refer to: Exhaust Gas Recirculation (EGR) Cooler to EGR Valve Tube (303-08 Engine Emission Control - 2.0L Duratorq-TDCi/2.2L Duratorq-TDCi (110kW/150PS) - Puma, Removal and Installation).

All vehicles

2. Drain the cooling system.
   For additional information, refer to: Cooling System Draining, Filling and Bleeding (303-03B Engine Cooling - 2.0L Duratorq-TDCi/2.2L Duratorq-TDCi (110kW/150PS) - Puma, General Procedures).
3. Detach the power steering fluid pipe.

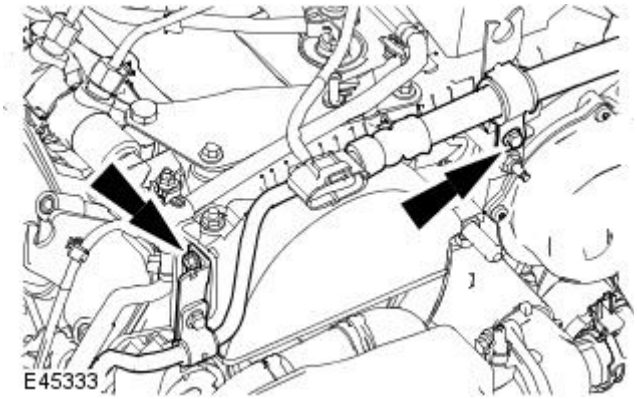

4. Detach the power steering pump belt.
   - Rotate the power steering pump belt tensioner clockwise.

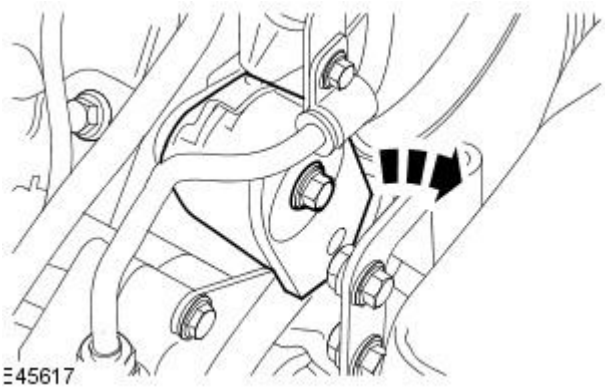

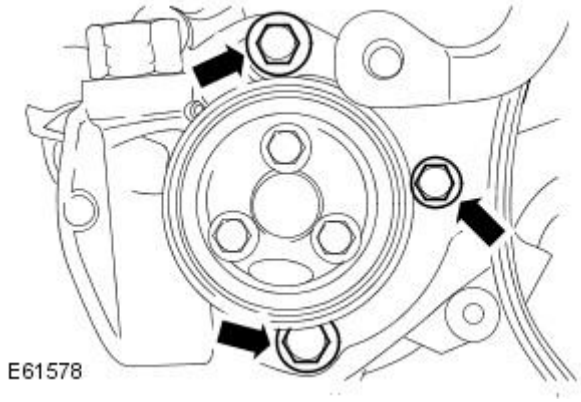

5. NOTE: Shown with the exhaust gas recirculation (EGR) cooler to EGR valve tube removed for clarity.

Remove the power steering pump retaining bolts.

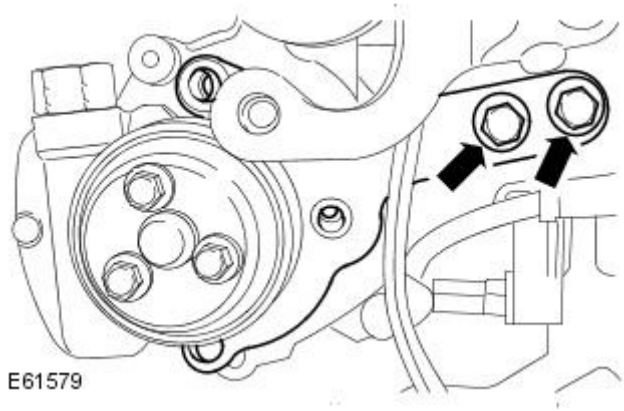

6. NOTE: Shown with the EGR cooler to EGR valve tube removed for clarity.

Remove the power steering pump securing bracket.

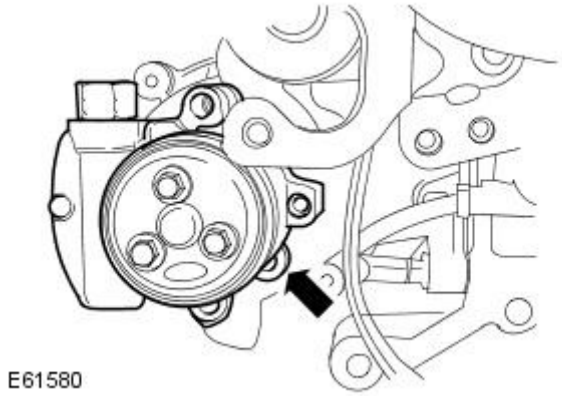

7. NOTE: Shown with the EGR cooler to EGR valve tube removed for clarity.

Detach the power steering pump from the water pump.

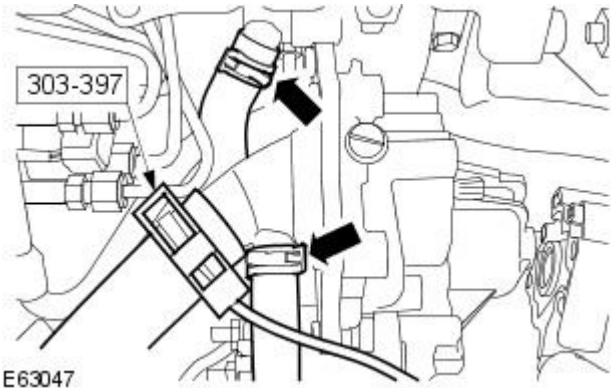

8. Using the special tool, disconnect the coolant hoses from the water pump.

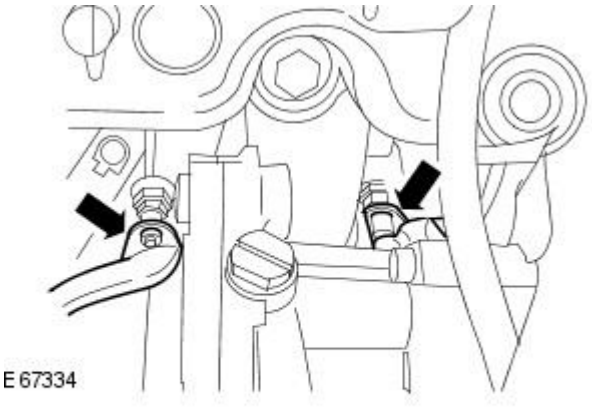

9. NOTE: Shown with the EGR cooler to EGR valve tube removed for clarity.

Detach the wiring harness.

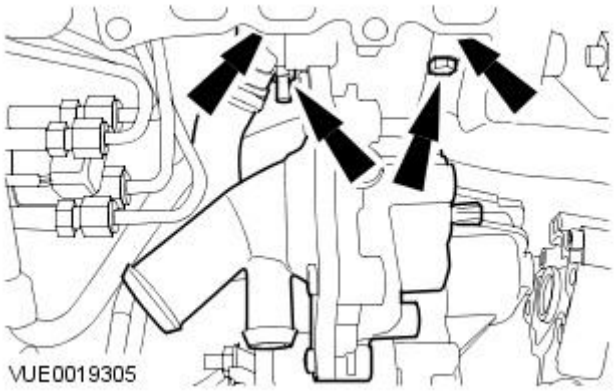

10. NOTE: Shown with the EGR cooler to EGR valve tube removed for clarity.

Detach the water pump.

- Detach the wiring harness from the water pump lower retaining bolts.

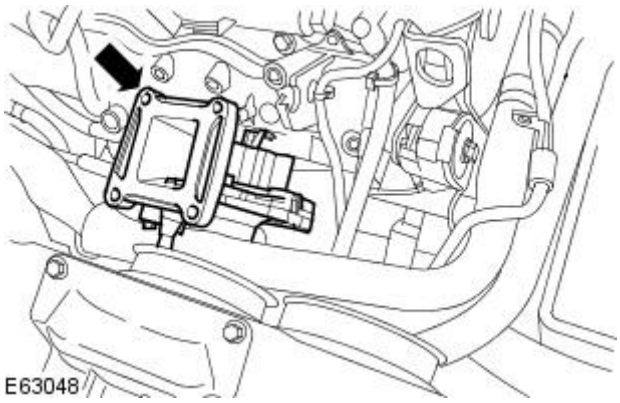

11. Remove the water pump.

- Remove and discard the gasket.

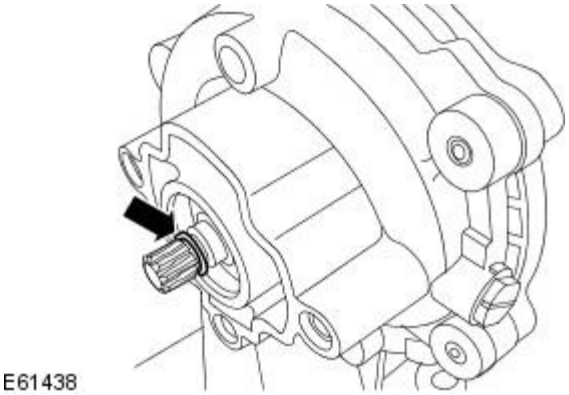

12. Remove and discard the water pump O-ring seal.

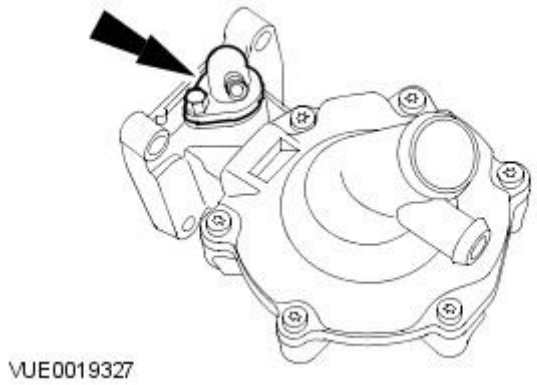

13. Remove the engine oil temperature control thermostat.

- Remove and discard the O-ring seal.

Installation

All vehicles

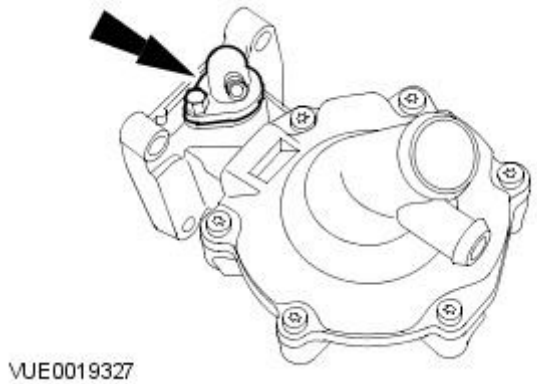

1. NOTE: Install a new engine oil temperature control thermostat O-ring seal.

Install the engine oil temperature control thermostat.

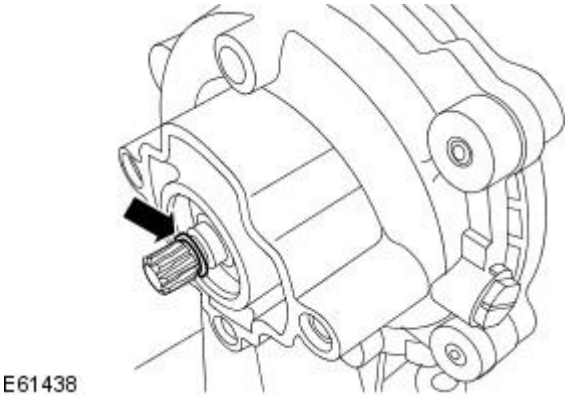

2. Install a new water pump O-ring seal.

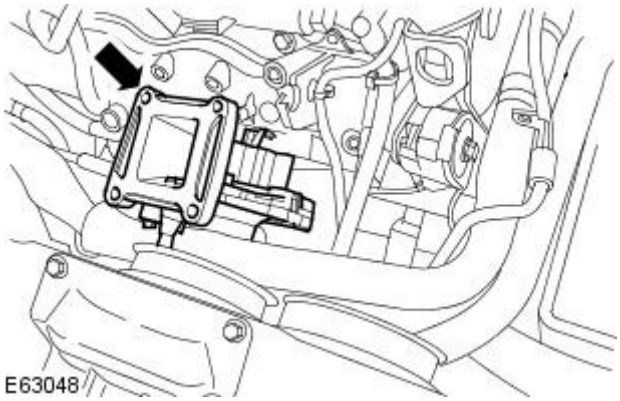

3. NOTE: Install a new water pump gasket.

Install the water pump.

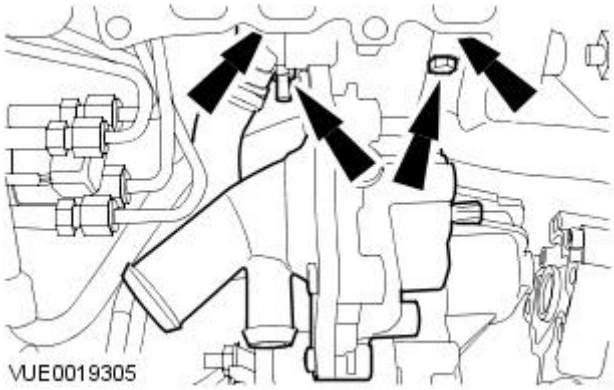

4. NOTE: Shown with the EGR cooler to EGR valve tube removed for clarity.

Attach the water pump.

- Tighten the water pump retaining bolts to 24 Nm.
- Attach the wiring harness to the water pump lower retaining bolts.

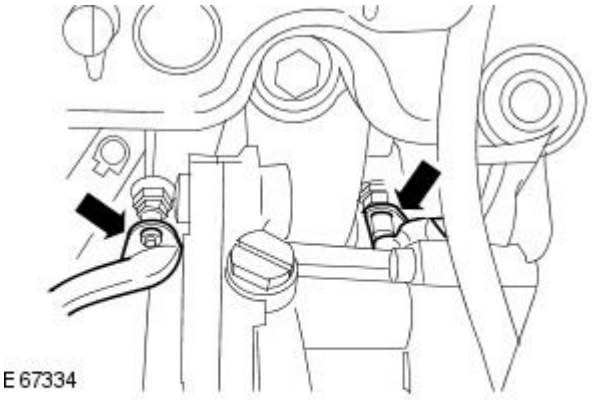

5. NOTE: Shown with the EGR cooler to EGR valve tube removed for clarity.

Attach the wiring harness.

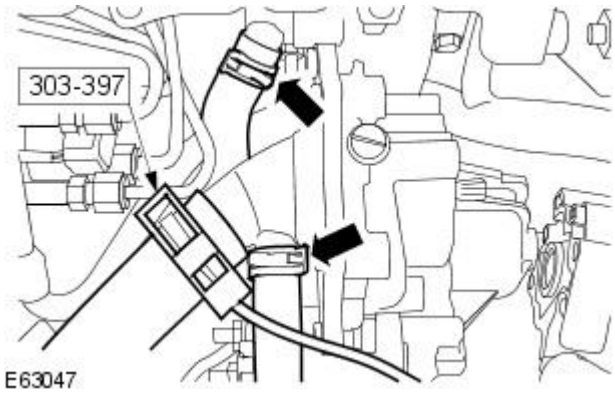

6. Using the special tool, connect the coolant hoses to the water pump.

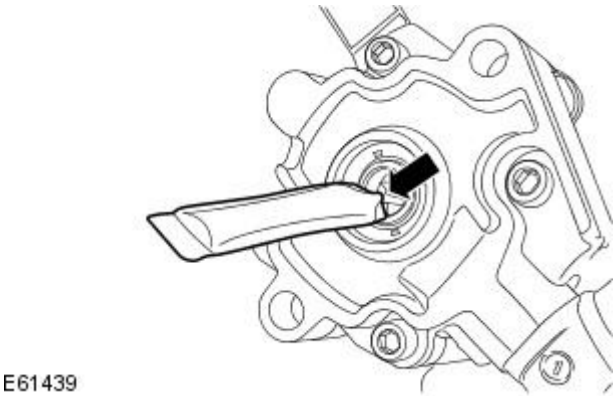

7. Coat the power steering pump drive shaft splines with grease.

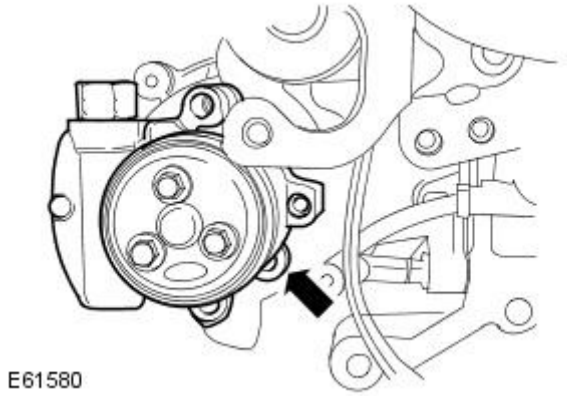

8. NOTE: Shown with the EGR cooler to EGR valve tube removed for clarity.

Attach the power steering pump to the water pump.

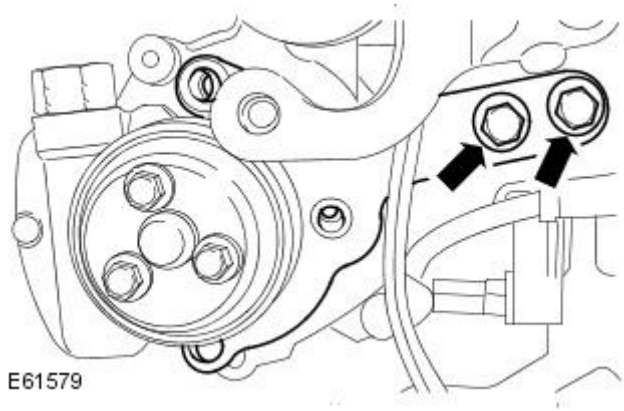

9. NOTE: Shown with the EGR cooler to EGR valve tube removed for clarity.

Install the power steering pump securing bracket.

- Tighten to 25 Nm.

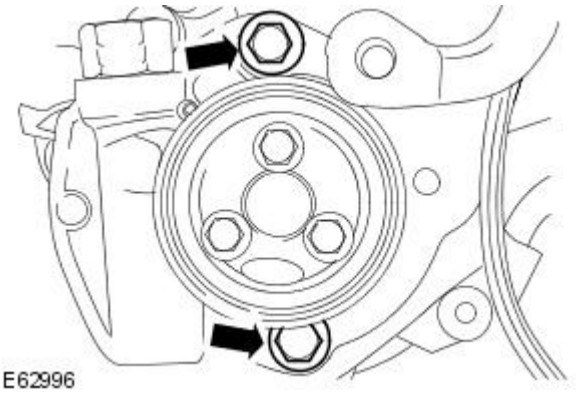

10. NOTE: Shown with the EGR cooler to EGR valve tube removed for clarity.

Install the power steering pump retaining bolts.

- Tighten to 25 Nm.

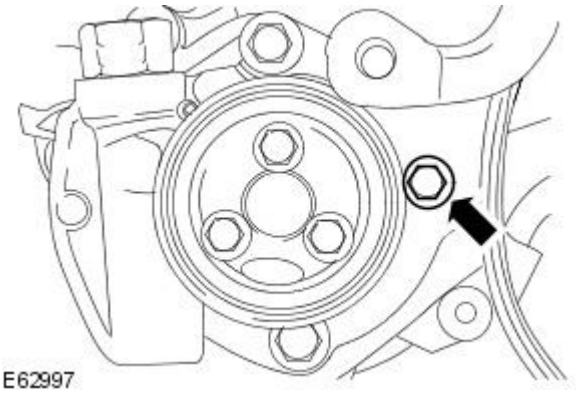

11. NOTE: Shown with the EGR cooler to EGR valve tube removed for clarity.

Install the power steering pump retaining bolts.

- Tighten to 10 Nm.

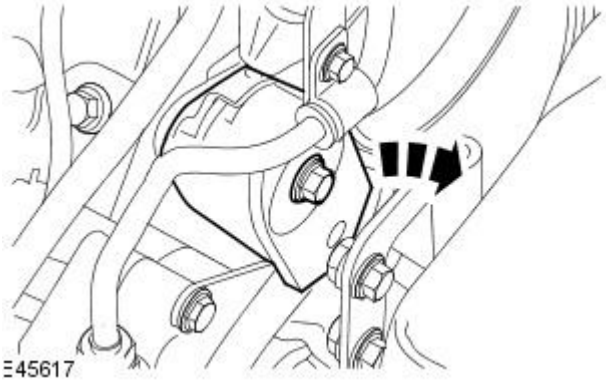

12. Attach the power steering pump belt.

- Rotate the power steering pump belt tensioner clockwise.

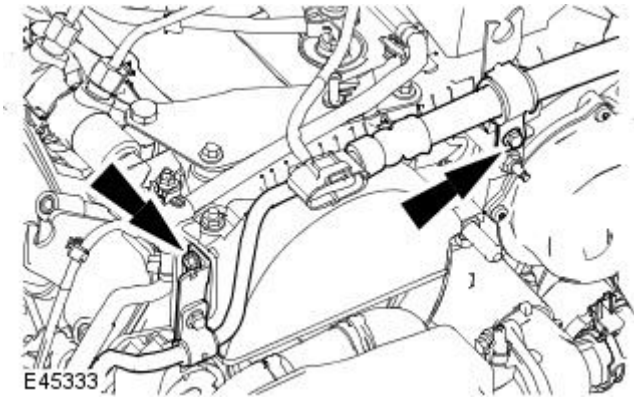

13. Attach the power steering fluid pipe.

14. Carry out the cooling system filling and bleeding procedure.
For additional information, refer to: Cooling System Draining, Filling and Bleeding (303-03B Engine Cooling - 2.0L Duratorq-TDCi/2.2L Duratorq-TDCi (110kW/150PS) - Puma, General Procedures).

Vehicles with 2.2L diesel engine

15. Install the exhaust gas recirculation (EGR) tube.
For additional information, refer to: Exhaust Gas Recirculation (EGR) Cooler to EGR Valve Tube (303-08 Engine Emission Control - 2.0L Duratorq-TDCi/2.2L Duratorq-TDCi (110kW/150PS) - Puma, Removal and Installation).

Fuel Charging and Controls - 2.0L NA V6 - AJV6 / 2.5L NA V6 - AJV6 / 3.0L NA V6 - AJ27 -

Torque Specifications

Description	Nm	lb-ft	lb-in
Lower intake manifold retaining bolts	10	-	89
Fuel injection supply manifold retaining bolts	10	-	89
Fuel pressure sensor retaining bolts	10	-	89
Throttle body retaining bolts	10	-	89

Fuel Charging and Controls - 2.0L NA V6 - AJV6 / 2.5L NA V6 - AJV6 / 3.0L NA V6 - AJ27 - Fuel Charging and Controls

Description and Operation

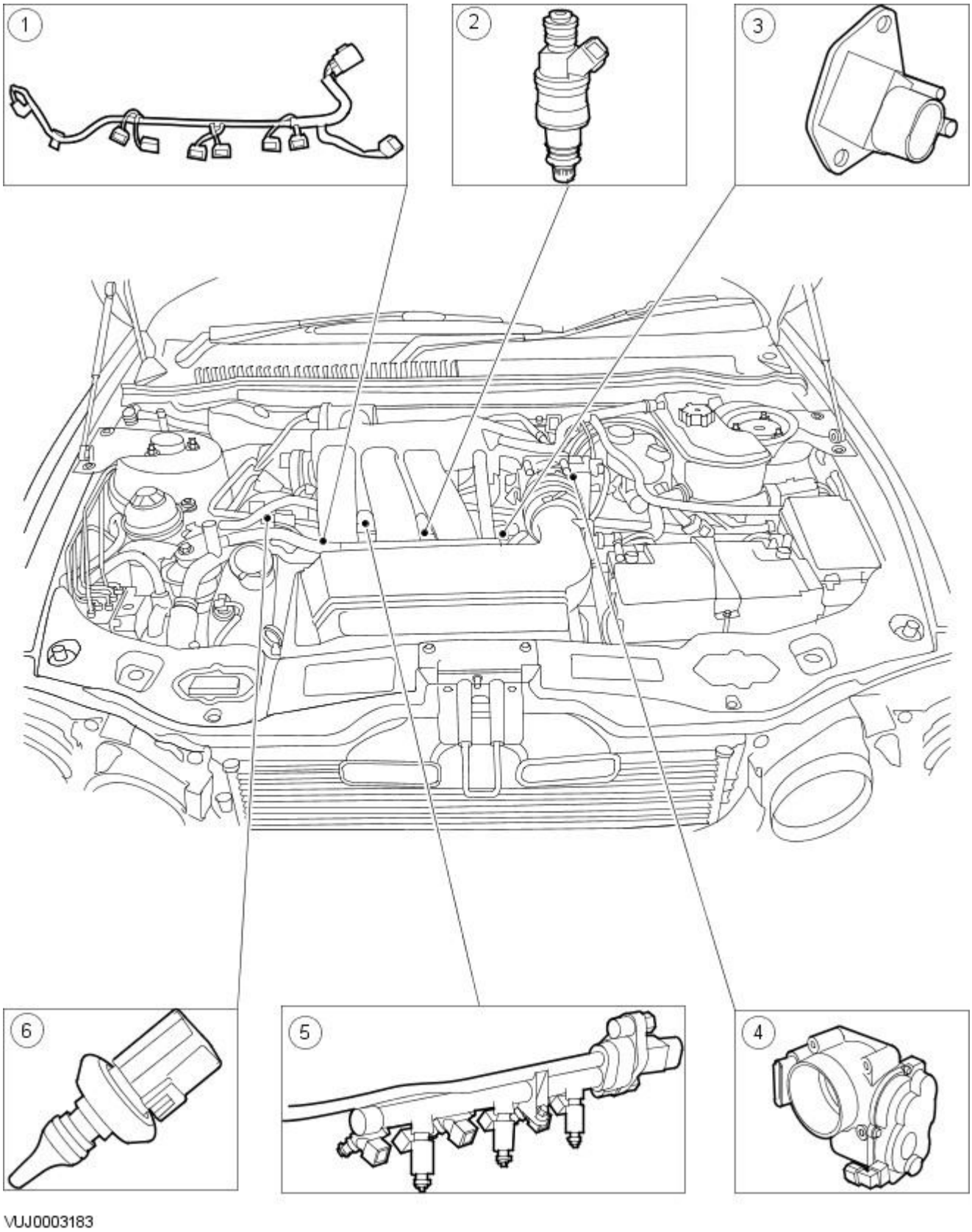

Item	Part Number	Description
1	—	Fuel charging wiring harness
2	—	Fuel injector
3	—	Fuel pressure sensor
4	—	Throttle body
5	—	Fuel injection supply manifold
6	-	Fuel temperature sensor

The electronic returnless fuel system utilized has the advantages of reduced fuel tank vapor, requires less electrical power and does not require a fuel return line.

Fuel is supplied at high pressure to the injectors via a fuel rail which incorporates six fuel injectors, a fuel pressure regulator and a fuel temperature sensor. The engine control module (ECM) maintains 380 kPa across the injectors, by increasing the pulse width modulation signal to the fuel pump controller. This in turn controls the voltage output to the fuel pump.

CAUTION: The use of supplementary oil or fuel additives is not approved unless specified by Jaguar Cars in the form of a service communication or directive.

A fuel pressure relief valve is fitted to the fuel rail at the front of the camshaft cover. This valve allows the fuel system to be depressurized during servicing and troubleshooting.

Published: 11-May-2011

Fuel Charging and Controls - 2.0L NA V6 - AJV6 / 2.5L NA V6 - AJV6 / 3.0L NA V6 - AJ27 - Fuel Charging and Controls2.0L NA V6 - AJV6

Diagnosis and Testing

1. **1.** Verify the customer concern by operating the system.
2. **2.** Visually inspect for obvious signs of mechanical or electrical damage.
3. **3.** Make sure there is sufficient fuel in the vehicle.
4. **4.** If an obvious cause for an observed or reported concern is found, correct the cause (if possible) before proceeding to the next step.
5. **5.** The DTC summaries are generated to support the Jaguar approved diagnostic system, but also provide the basis for diagnosis of OBD related concerns using a suitable generic scan tool, in conjunction with the electrical guides. Until the DTC summaries and electrical guides are available, the fuel charging and controls system can only be diagnosed using the Jaguar approved diagnostic system. For additional information, refer to Dealer technical support.

Published: 24-Nov-2011

Fuel Charging and Controls - 2.0L NA V6 - AJV6 / 2.5L NA V6 - AJV6 / 3.0L NA V6 - AJ27 - Fuel Charging and Controls2.5L NA V6 - AJV6 / 3.0L NA V6 - AJ27, VIN Range: E96603->J28492

Diagnosis and Testing

1. **1.** Verify the customer concern by operating the system.
2. **2.** Visually inspect for obvious signs of mechanical or electrical damage.
3. **3.** If an obvious cause for an observed or reported concern is found, correct the cause (if possible) before proceeding to the next step.
4. **4.** If the concern is not visually evident, use a fault code reader to retrieve fault codes before proceeding to the Symptom Chart.

Symptom Chart

DTC	Condition	Possible Causes	Action
P0171	Right-Hand bank combustion too lean	• Engine misfire • Air intake leak between MAF sensor and throttle • Fuel injector restriction • Fuel filter/system restriction • Fuel pressure sensor failure (low fuel pressure) • Low fuel pump output • HO2S (1/1; 1/2) harness wiring condition fault • Exhaust leak (before catalyst) • engine control module (ECM) receiving incorrect signal from one or more of the following components; ECT sensor, MAF sensor, IAT sensor, IP sensor, EFT sensor, TP sensor	REFER to: Engine Ignition - 2.5L NA V6 - AJV6/3.0L NA V6 - AJ27 (303-07A Engine Ignition - 2.0L NA V6 - AJV6/2.5L NA V6 - AJV6/3.0L NA V6 - AJ27, Diagnosis and Testing) / Engine (303-01A Engine - 2.0L NA V6 - AJV6/2.5L NA V6 - AJV6/3.0L NA V6 - AJ27, Diagnosis and Testing) / Fuel Charging and Controls - 2.5L NA V6 - AJV6/3.0L NA V6 - AJ27, VIN Range: E96603->J28492 (303-04A Fuel Charging and Controls - 2.0L NA V6 - AJV6/2.5L NA V6 - AJV6/3.0L NA V6 - AJ27, Diagnosis and Testing) / Fuel Injectors (303-04A Fuel Charging and Controls - 2.0L NA V6 - AJV6/2.5L NA V6 - AJV6/3.0L NA V6 - AJ27, Removal and Installation) / Exhaust System (309-00 Exhaust System, Diagnosis and Testing) / Electronic Engine Controls - 2.5L NA V6 - AJV6/3.0L NA V6 - AJ27, VIN Range: E96603->J28492 (303-14A Electronic Engine Controls - 2.0L NA V6 - AJV6/2.5L NA V6 - AJV6/3.0L NA V6 - AJ27, Diagnosis and Testing).
P0172	Right-hand bank combustion too rich	• Restricted air filter • Leaking fuel injector(s) • Fuel pressure sensor failure (high fuel pressure) • ECM receiving incorrect signal from one or more of the following components; ECT sensor, MAF sensor, IAT sensor, IP sensor, EFT sensor, TP sensor	REFER to: Intake Air Distribution and Filtering (303-12A Intake Air Distribution and Filtering - 2.0L NA V6 - AJV6/2.5L NA V6 - AJV6/3.0L NA V6 - AJ27, Diagnosis and Testing) / Fuel Injectors (303-04A Fuel Charging and Controls - 2.0L NA V6 - AJV6/2.5L NA V6 - AJV6/3.0L NA V6 - AJ27, Removal and Installation) / Electronic Engine Controls - 2.5L NA V6 - AJV6/3.0L NA V6 - AJ27, VIN Range: E96603->J28492 (303-14A Electronic Engine Controls - 2.0L NA V6 - AJV6/2.5L NA V6 - AJV6/3.0L NA V6 - AJ27, Diagnosis and Testing).
P0174	Left-hand bank combustion too lean	• Engine misfire • Air intake leak between MAF sensor and throttle • Fuel injector restriction • Fuel filter/system restriction • Fuel pressure sensor failure (low fuel pressure) • Low fuel pump output • HO2S (2/1; 2/2) harness wiring condition fault • Exhaust leak (before catalyst) • ECM receiving incorrect signal from one or more of the following components; ECT sensor, MAF sensor, IAT sensor, IP sensor, EFT sensor, TP sensor	REFER to: Engine Ignition - 2.5L NA V6 - AJV6/3.0L NA V6 - AJ27 (303-07A Engine Ignition - 2.0L NA V6 - AJV6/2.5L NA V6 - AJV6/3.0L NA V6 - AJ27, Diagnosis and Testing) / Engine (303-01A Engine - 2.0L NA V6 - AJV6/2.5L NA V6 - AJV6/3.0L NA V6 - AJ27, Diagnosis and Testing) / Fuel Charging and Controls - 2.5L NA V6 - AJV6/3.0L NA V6 - AJ27, VIN Range: E96603->J28492 (303-04A Fuel Charging and Controls - 2.0L NA V6 - AJV6/2.5L NA V6 - AJV6/3.0L NA V6 - AJ27, Diagnosis and Testing) / Fuel Injectors (303-04A Fuel Charging and Controls - 2.0L NA V6 - AJV6/2.5L NA V6 - AJV6/3.0L NA V6 - AJ27, Removal and Installation) / Exhaust System (309-00 Exhaust System, Diagnosis and Testing) / Electronic Engine Controls - 2.5L NA V6 - AJV6/3.0L NA V6 - AJ27, VIN Range: E96603->J28492 (303-14A Electronic Engine Controls - 2.0L NA V6 - AJV6/2.5L NA V6 - AJV6/3.0L NA V6 - AJ27, Diagnosis and Testing).
P0175	Left-hand bank combustion too rich	• Restricted air filter • Leaking fuel injector(s) • Fuel pressure sensor failure (high fuel pressure) • ECM receiving incorrect signal from one or more of the following components; ECT sensor, MAF sensor, IAT sensor, IP sensor, EFT sensor, TP sensor	REFER to: Intake Air Distribution and Filtering (303-12A Intake Air Distribution and Filtering - 2.0L NA V6 - AJV6/2.5L NA V6 - AJV6/3.0L NA V6 - AJ27, Diagnosis and Testing) / Fuel Injectors (303-04A Fuel Charging and Controls - 2.0L NA V6 - AJV6/2.5L NA V6 - AJV6/3.0L NA V6 - AJ27, Removal and Installation) / Electronic Engine Controls - 2.5L NA V6 - AJV6/3.0L NA V6 - AJ27, VIN Range: E96603->J28492 (303-14A Electronic Engine Controls - 2.0L NA V6 - AJV6/2.5L NA V6 - AJV6/3.0L NA V6 - AJ27, Diagnosis and Testing).
P1251, P1631, P1657, P1658	Concern with throttle motor relay	• Throttle motor relay • Throttle motor relay circuit	REFER to: Electronic Engine Controls - 2.5L NA V6 - AJV6/3.0L NA V6 - AJ27, VIN Range: E96603->J28492 (303-14A Electronic Engine Controls - 2.0L NA V6 - AJV6/2.5L NA V6 - AJV6/3.0L NA V6 - AJ27, Diagnosis and Testing).

DTC	Condition	Possible Causes	Action
P0112, P0113	Concern with IAT sensor	• Engine faulty leading to overheating • Intake air temperature (IAT) sensor fault • Harness fault • ECM failure	REFER to: Acceleration Control (310-02 Acceleration Control, Diagnosis and Testing) / Electronic Engine Controls - 2.5L NA V6 - AJV6/3.0L NA V6 - AJ27, VIN Range: E96603->J28492 (303-14A Electronic Engine Controls - 2.0L NA V6 - AJV6/2.5L NA V6 - AJV6/3.0L NA V6 - AJ27, Diagnosis and Testing).
P0121, P0122, P0123, P0222, P0223	Concern with throttle position (TP) sensor	• TP sensor fault • Harness fault • ECM failure	REFER to: Electronic Engine Controls - 2.5L NA V6 - AJV6/3.0L NA V6 - AJ27, VIN Range: E96603->J28492 (303-14A Electronic Engine Controls - 2.0L NA V6 - AJV6/2.5L NA V6 - AJV6/3.0L NA V6 - AJ27, Diagnosis and Testing).
P0116, P0117, P0118, P0125	Concern with engine coolant temperature	• Engine coolant temperature sensor • Harness fault • ECM failure	REFER to: Electronic Engine Controls - 2.5L NA V6 - AJV6/3.0L NA V6 - AJ27, VIN Range: E96603->J28492 (303-14A Electronic Engine Controls - 2.0L NA V6 - AJV6/2.5L NA V6 - AJV6/3.0L NA V6 - AJ27, Diagnosis and Testing).
P0201, P0202, P0203, P0204, P0205, P0206	Concern with fuel injectors	• Faulty injector(s) • Harness fault • ECM failure	REFER to: Fuel Injectors (303-04A Fuel Charging and Controls - 2.0L NA V6 - AJV6/2.5L NA V6 - AJV6/3.0L NA V6 - AJ27, Removal and Installation) / Fuel Charging Wiring Harness (303-04A Fuel Charging and Controls - 2.0L NA V6 - AJV6/2.5L NA V6 - AJV6/3.0L NA V6 - AJ27, Removal and Installation) / Electronic Engine Controls - 2.5L NA V6 - AJV6/3.0L NA V6 - AJ27, VIN Range: E96603->J28492 (303-14A Electronic Engine Controls - 2.0L NA V6 - AJV6/2.5L NA V6 - AJV6/3.0L NA V6 - AJ27, Diagnosis and Testing).
P0191	Concern with injection pressure (IP) sensor	• Fuel rail pressure sensor • Harness fault • Fuel filter/system restriction • Fuel system leak • Incorrect fuel pump output • IP sensor to ECM sensing circuit; high resistance, open circuit, short circuit to high voltage • IP sensor to splice in sensor supply circuit; high resistance, open circuit • IP sensor to splice in sensor ground circuit; high resistance, open circuit • IP sensor to splice in sensor ground circuit; high resistance, open circuit, short circuit to ground, short circuit to high voltage • IP sensor failure	GO to Pinpoint Test B.
P0192	Concern with injection pressure (IP) sensor (low voltage/low pressure)	• IP sensor disconnected • IP sensor to ECM sensing circuit; open circuit or short circuit to ground • IP sensor to splice in sensor supply circuit; high resistance, open circuit • IP sensor failure	GO to Pinpoint Test B.
P0193	Concern with injection pressure (IP) sensor (high voltage/high pressure)	• IP sensor to ECM wiring (supply/sense) short circuit to each other • IP sensor to ECM sense circuit; short circuit to high voltage • IP sensor to splice in sensor ground circuit; open circuit • IP sensor failure	GO to Pinpoint Test B.
P0460	Concern with fuel level sensors	• Fuel level sensor to instrument cluster circuit(s); intermittent short circuit, open circuit, high resistance • Fuel level sensor failure • Instrument cluster fault	GO to Pinpoint Test C.
P1234, P1236	Concern with fuel pump commands (no commands received by ECM)	• ECM to fuel pump control module control and/or feedback circuits; open circuit, short circuit, high resistance • Fuel pump control module failure	GO to Pinpoint Test D.

DTC	Condition	Possible Causes	Action
P1338	Concern with fuel pump commands (fuel pump not activated when requested by ECM)	• ECM to fuel pump control module control and/or feedback circuits; open circuit, short circuit, high resistance • Fuel pump control module failure	GO to Pinpoint Test E.
P1229	Concern with throttle motor control circuit	• Throttle motor disconnected • Throttle motor to ECM drive circuits; short circuit or open circuit • Throttle motor failure	GO to Pinpoint Test F.
P1224	Concern with throttle control position	• Throttle adaptions not performed after battery disconnect • TP sensor disconnected • TP sensor to ECM sense circuits; open circuit, high resistance • Throttle motor relay failure • Throttle motor relay to ECM circuit fault • Throttle motor relay power supply open circuit • ECM ground circuit fault (relay coil drive) • Throttle motor to ECM drive circuits; open circuit, short circuit, high resistance • Throttle motor failure • Throttle body failure	GO to Pinpoint Test F. REFER to: Electronic Engine Controls - 2.5L NA V6 - AJV6/3.0L NA V6 - AJ27, VIN Range: E96603->J28492 (303-14A Electronic Engine Controls - 2.0L NA V6 - AJV6/2.5L NA V6 - AJV6/3.0L NA V6 - AJ27, Diagnosis and Testing). Individual Pinpoint tests for components and circuits listed
P1250, P1254	Concern with throttle valve return spring and "limp-home" spring	Throttle body	These DTCs can only be accurately diagnosed using the Jaguar approved diagnostic system. If this is not available, INSTALL a new throttle body. REFER to: Throttle Body (303-04, Removal and Installation). CLEAR the DTC, TEST the system for normal operation.
P1656	Concern with TP sensor amplifier circuit	ECM	REFER to: Electronic Engine Controls - 2.5L NA V6 - AJV6/3.0L NA V6 - AJ27, VIN Range: E96603->J28492 (303-14A Electronic Engine Controls - 2.0L NA V6 - AJV6/2.5L NA V6 - AJV6/3.0L NA V6 - AJ27, Diagnosis and Testing).

PINPOINT TEST A : FUEL INJECTORS, P0201, P0202, P0203, P0204, P0205, P0206.

• NOTE: The DTC set will indicate which cylinder injector or circuit is faulty. Only in the event of multiple cylinder misfires will it be necessary to check more than one injector or circuit, in which case, multiple DTCs will be set.

TEST CONDITIONS	DETAILS/RESULTS/ACTIONS
A1: CHECK THE INJECTOR COIL RESISTANCE	
	1 Turn the ignition switch to the OFF position.
	2 Disconnect the relevant injector electrical connector (IJ1 to 6).
	3 Measure the resistance between the injector pins.
	Is the resistance between 12 and 16 ohms? **Yes** GO to A2. **No** INSTALL a new injector. REFER to: Fuel Injectors (303-04A Fuel Charging and Controls - 2.0L NA V6 - AJV6/2.5L NA V6 - AJV6/3.0L NA V6 - AJ27, Removal and Installation). CLEAR the DTC. TEST the system for normal operation.
A2: CHECK THE INJECTOR COIL INSULATION	
	1 Measure the resistance between the injector pin 1 and the injector body.
	2 Measure the resistance between the injector pin 2 and the injector body.
	Are both resistances greater than 10 Mohms? **Yes** GO to A3. **No** INSTALL a new injector. REFER to: Fuel Injectors (303-04A Fuel Charging and Controls - 2.0L NA V6 - AJV6/2.5L NA V6 - AJV6/3.0L NA V6 - AJ27, Removal and Installation). CLEAR the DTC. TEST the system for normal operation.
A3: CHECK THE INJECTOR SUPPLY VOLTAGE	
	1 Turn the ignition switch to the ON position.
	2 Disconnect the relevant injector harness electrical connector (IJ1 to 6).
	3 Measure the voltage between the relevant injector harness electrical connector (IJ1 to 6) pin 2 and GROUND.
	Is the voltage greater than 12 Volts? **Yes** GO to A4. **No** REPAIR the circuit between the relevant injector harness electrical connector, (IJ1 to 6) pin 2 and battery. This circuit includes the power distribution fuse box, fuse 41, and the EMS control relay. For additional information, refer to wiring diagrams. CLEAR DTC. TEST the system for normal operation.
A4: CHECK THE INJECTOR GROUND CIRCUIT	
	1 Turn the ignition switch to the OFF position.
	2 Disconnect the ECM electrical connector EN16.

	3 Measure the resistance between the relevant injector harness electrical connector (IJ1 to 6) pin 1 and EN16 pins as follows - • Injector 1 pin 1 (NW) and ECM pin 115. • Injector Cyl 3 pin 1 (N) and ECM pin 114. • Injector Cyl 5 pin 1 (NR) and ECM pin 113. • Injector Cyl 2 pin 1 (NU) and ECM pin 120. • Injector Cyl 4 pin 1 (NG) and ECM pin 119. • Injector Cyl 6 pin 1 (NY) and ECM pin 118.
	Is the resistance less than 5 ohms? **Yes** GO to A5. **No** REPAIR the circuit between the relevant injector harness electrical connector pin 1 and the ECM electrical connector. For additional information, refer to wiring diagrams. CLEAR the DTC. TEST the system for normal operation.
A5: CHECK THE INJECTOR GROUND CIRCUIT FOR SHORT CIRCUIT TO BATTERY	
	1 Measure the voltage between the relevant injector harness electrical connector (IJ1 to 6) pin 1 and GROUND.
	Is the voltage greater than 1 volt? **Yes** REPAIR the short circuit. For additional information, refer to wiring diagrams. CLEAR the DTC. TEST the system for normal operation. **No** GO to A6.
A6: CHECK THE INJECTOR GROUND CIRCUIT FOR SHORT CIRCUIT TO GROUND	
	1 Measure the resistance between the relevant injector harness electrical connector (IJ1 to 6) pin 1 and GROUND.
	Is the resistance less than 10,000 ohms? **Yes** REPAIR the short circuit. For additional information, refer to wiring diagrams. CLEAR the DTC. TEST the system for normal operation. **No** INSTALL a new ECM. REFER to: Electronic Engine Controls - 2.5L NA V6 - AJV6/3.0L NA V6 - AJ27, VIN Range: E96603->J28492 (303-14A Electronic Engine Controls - 2.0L NA V6 - AJV6/2.5L NA V6 - AJV6/3.0L NA V6 - AJ27, Diagnosis and Testing). Before replacing a ECM, contact Dealer technical support.

PINPOINT TEST B : FUEL RAIL PRESSURE SENSOR. P0190, P0192, P0193	
TEST CONDITIONS	**DETAILS/RESULTS/ACTIONS**
B1: CHECK THE FUEL RAIL PRESSURE SENSOR SUPPLY VOLTAGE	
	1 Turn the ignition switch to the OFF position.
	2 Disconnect the fuel rail pressure sensor electrical connector IJ007.
	3 Turn the ignition switch to the ON position.
	4 Measure the supply voltage to the fuel rail pressure sensor electrical connector IJ007 pin 1 (YG) and GROUND.
	Is the supply voltage between 4.5 and 5.5 volts? **Yes** GO to B2. **No** REPAIR the circuit between IJ007 pin 1, (YG) and ENS07. For additional information, refer to wiring diagrams. CLEAR the DTC. TEST the system for normal operation. If the DTC is repeated, INSTALL a new ECM. REFER to: Electronic Engine Controls - 2.5L NA V6 - AJV6/3.0L NA V6 - AJ27, VIN Range: E96603->J28492 (303-14A Electronic Engine Controls - 2.0L NA V6 - AJV6/2.5L NA V6 - AJV6/3.0L NA V6 - AJ27, Diagnosis and Testing). Before replacing a ECM, contact Dealer technical support. (The fault could be in any of the components or sensors in the 5 volt supply circuit, or the ECM)
B2: CHECK THE FUEL RAIL PRESSURE SENSOR GROUND CIRCUIT FOR OPEN CIRCUIT	
	1 Turn the ignition switch to the OFF position.
	2 Measure the resistance between the fuel rail pressure sensor electrical connector IJ007 pin 2, (WG) and GROUND.
	Is the resistance greater than 10,000 ohms? **Yes** REPAIR the circuit between IJ007 pin 2 (WG) and ground at IJS02. For additional information, refer to wiring diagrams. CLEAR the DTC. TEST the system for normal operation. **No** GO to B3.
B3: CHECK THE FUEL RAIL PRESSURE SENSOR SIGNAL CIRCUIT FOR OPEN CIRCUIT	
	1 Disconnect the ECM electrical connector EN16.
	2 Measure the resistance between the fuel rail pressure sensor electrical connector IJ007 pin 3 (WG) and EN16 pin 73.
	Is the resistance greater than 5 ohms? **Yes** REPAIR the circuit between IJ007 pin 3 (WG) and EN016 pin 73 (WG). For additional information, refer to wiring diagrams. CLEAR the DTC. TEST the system for normal operation. **No** GO to B4.
B4: CHECK THE FUEL RAIL PRESSURE SENSOR SIGNAL CIRCUIT FOR SHORT TO GROUND	
	1 Measure the resistance between the fuel rail pressure sensor electrical connector IJ007 pin 3 (WG) and GROUND.
	Is the resistance less than 10,000 ohms? **Yes** REPAIR the circuit between IJ007 pin 3 (WG) and EN016 pin 73 (WG). For additional information, refer to wiring diagrams. CLEAR the DTC. TEST the system for normal operation. **No** GO to B5.
B5: CHECK THE FUEL RAIL PRESSURE SENSOR CIRCUIT RESISTANCE	
	1 Disconnect the fuel rail pressure sensor electrical connector IJ007.
	2 Measure the resistance between the fuel rail pressure sensor pins 1 and 2.
	Is the resistance between 10,000 and 12,000 ohms? **Yes** GO to B6. **No** Install a new fuel rail pressure sensor.

	REFER to: Fuel Pulse Damper - 2.5L NA V6 - AJV6/3.0L NA V6 - AJ27 (303-04A Fuel Charging and Controls - 2.0L NA V6 - AJV6/2.5L NA V6 - AJV6/3.0L NA V6 - AJ27, Removal and Installation). CLEAR the DTC. TEST the system for normal operation.
B6: CHECK THE FUEL RAIL PRESSURE SENSOR CIRCUIT RESISTANCE	
	1 Measure the resistance between the fuel rail pressure sensor pins 2 and 3.
	Is the resistance between 22,000 and 33,000 ohms? **Yes** GO to B7. **No** Install a new fuel rail pressure sensor. REFER to: Fuel Pulse Damper - 2.5L NA V6 - AJV6/3.0L NA V6 - AJ27 (303-04A Fuel Charging and Controls - 2.0L NA V6 - AJV6/2.5L NA V6 - AJV6/3.0L NA V6 - AJ27, Removal and Installation). CLEAR the DTC. TEST the system for normal operation.
B7: CHECK THE FUEL RAIL PRESSURE SENSOR CIRCUIT RESISTANCE	
	1 Measure the resistance between the fuel rail pressure sensor pins 1 and 3.
	Is the resistance between 22,000 and 33,000 ohms? **Yes** Install a new ECM. REFER to: Electronic Engine Controls - 2.5L NA V6 - AJV6/3.0L NA V6 - AJ27, VIN Range: E96603->J28492 (303-14A Electronic Engine Controls - 2.0L NA V6 - AJV6/2.5L NA V6 - AJV6/3.0L NA V6 - AJ27, Diagnosis and Testing). Before replacing a ECM, contact Dealer technical support. **No** Install a new fuel rail pressure sensor. REFER to: Fuel Pulse Damper - 2.5L NA V6 - AJV6/3.0L NA V6 - AJ27 (303-04A Fuel Charging and Controls - 2.0L NA V6 - AJV6/2.5L NA V6 - AJV6/3.0L NA V6 - AJ27, Removal and Installation). CLEAR the DTC. TEST the system for normal operation.

PINPOINT TEST C : FUEL LEVEL SENSORS. P0460	
TEST CONDITIONS	**DETAILS/RESULTS/ACTIONS**
C1: CHECK THE FUEL LEVEL SENSOR (1) GROUND CIRCUIT	
	1 Disconnect the fuel level sensor electrical connector FT2.
	2 Turn the ignition switch to the ON position.
	3 Measure the resistance between electrical connector FT2 pin 3 (B) and GROUND.
	Is the resistance less than 5 ohms? **Yes** GO to C2. **No** REPAIR the circuit between electrical connector FT2 pin 3 (B) and GROUND. For additional information, refer to wiring diagrams.CLEAR the DTC. TEST the system for normal operation.
C2: CHECK THE FUEL LEVEL SENSOR (1) SIGNAL CIRCUIT	
	1 Disconnect the Instrument cluster electrical connector IP10.
	2 Measure the resistance between electrical connector FT2 pin 1 (WU) and electrical connector IP10 pin 7 (WU)
	Is the resistance less than 5 ohms? **Yes** GO to C3. **No** REPAIR the circuit between FT2 pin 1 (WU) and IP10 pin 7 (WU). For additional information, refer to wiring diagrams. CLEAR the DTC. TEST the system for normal operation.
C3: CHECK THE FUEL LEVEL SENSOR (1) RHEOSTAT (EMPTY)	
	1 Empty the fuel tank.
	2 Measure the resistance between pins 1 and 3 of the fuel level sensor.
	Is the resistance 20 ohms? **Yes** GO to C4. **No** INSTALL a new fuel level sensor. REFER to: Fuel Tank and Lines (310-01 Fuel Tank and Lines, Diagnosis and Testing). CLEAR the DTC. TEST the system for normal operation.
C4: CHECK THE FUEL LEVEL SENSOR (1) RHEOSTAT (FULL)	
	1 Fill the fuel tank.
	2 Measure the resistance between pins 1 and 3 of the fuel level sensor.
	Is the resistance 160 ohms? **Yes** INSTALL a new instrument cluster. REFER to: Instrument Cluster (413-01 Instrument Cluster, Diagnosis and Testing). CLEAR the DTC. TEST the system for normal operation. **No** INSTALL a new fuel level sensor. REFER to: Fuel Tank and Lines (310-01 Fuel Tank and Lines, Diagnosis and Testing). CLEAR the DTC. TEST the system for normal operation.
C5: CHECK THE FUEL LEVEL SENSOR (2) GROUND CIRCUIT	
	1 Disconnect the fuel level sensor electrical connector, FT3.
	2 Turn the ignition switch to the ON position.
	3 Measure the resistance between electrical connector FT3, pin 3 (B) and GROUND.
	Is the resistance less than 5 ohms? **Yes** GO to C6. **No** REPAIR the circuit between FT3 pin 3 (B) and ground. For additional information, refer to wiring diagrams. CLEAR the DTC. TEST the system for normal operation.
C6: CHECK THE FUEL LEVEL SENSOR (2) SIGNAL CIRCUIT	
	1 Disconnect the instrument cluster electrical connector IP10.
	2 Measure the resistance between electrical connector FT3 pin 1 (WB) and electrical connector IP10 pin 8(WB)

	Is the resistance less than 5 ohms? **Yes** GO to C7. **No** REPAIR the circuit between FT3 pin 1 (WB) and IP10 pin 8 (WB). For additional information, refer to wiring diagrams. CLEAR the DTC. TEST the system for normal operation.
C7: CHECK THE FUEL LEVEL SENSOR (2) RHEOSTAT (EMPTY)	
	1 Empty the fuel tank.
	2 Measure the resistance between pins 1 and 3 of the fuel level sensor.
	Is the resistance 20 ohms? **Yes** GO to C8. **No** INSTALL a new fuel level sensor. REFER to: Fuel Tank and Lines (310-01 Fuel Tank and Lines, Diagnosis and Testing). CLEAR the DTC. TEST the system for normal operation.
C8: CHECK THE FUEL LEVEL SENSOR (2) RHEOSTAT (FULL)	
	1 Fill the fuel tank.
	2 Measure the resistance between pins 1 and 3 of the fuel level sensor.
	Is the resistance 160 ohms? **Yes** INSTALL a new instrument cluster. REFER to: Instrument Cluster (413-01 Instrument Cluster, Diagnosis and Testing). CLEAR the DTC. TEST the system for normal operation. **No** INSTALL a new fuel level sensor. REFER to: Fuel Tank and Lines (310-01 Fuel Tank and Lines, Diagnosis and Testing). CLEAR the DTC. TEST the system for normal operation.

PINPOINT TEST D : FUEL PUMP CONTROL MODULE. P1234, P1236	
TEST CONDITIONS	**DETAILS/RESULTS/ACTIONS**
D1: CHECK THE POWER SUPPLY TO THE FUEL PUMP MODULE	
	1 Disconnect the fuel pump module electrical connector CA105.
	2 Turn the ignition switch to the ON position.
	3 Measure the voltage at CA105 pin 9 (NG)
	Is the voltage greater than 10 volts? **Yes** GO to D2. **No** REPAIR the circuit between electrical connector CA105 pin 9 (NG) and the ignition switch. CLEAR the DTC. TEST the system for normal operation. (This circuit includes the central junction fuse box, ignition relay, and the inertia switch. For additional information, refer to wiring diagrams)
D2: CHECK THE GROUND CIRCUIT TO THE FUEL PUMP MODULE	
	1 Measure the resistance between CA105 pin 2 (B) and ground.
	Is the resistance less than 5 ohms? **Yes** GO to D3. **No** REPAIR the circuit between electrical connector CA105 pin 2 (B) and GROUND. For additional information, refer to wiring diagrams. CLEAR the DTC. TEST the system for normal operation.
D3: CHECK THE SIGNAL GROUND CIRCUIT TO THE FUEL PUMP MODULE	
• NOTE: This test would be necessary if there were an EMC (Electro Magnetic Compatibility) issue with the vehicle.	
	1 Turn the ignition switch to the CRANK position.
	2 Measure the resistance between electrical connector CA105 pin 4 (BG) and ground.
	Is the resistance less than 5 ohms? **Yes** GO to D4. **No** REPAIR the circuit between electrical connector CA105 pin 4 (BG) and GROUND. For additional information, refer to wiring diagrams. CLEAR the DTC. TEST the system for normal operation. (This circuit includes the ECM)
D4: CHECK THE POWER SUPPLY CIRCUIT TO THE FUEL PUMP	
	1 Reconnect the fuel pump module electrical connector CA105.
	2 Disconnect the fuel pump electrical connector FT2.
	3 Turn the ignition switch to the ON position.
	4 Measure the voltage between electrical connector FT2 pin 2 (R) and GROUND.
	Is the voltage greater than 10 volts? **Yes** GO to D5. **No** INSTALL a new fuel pump module. REFER to: Fuel Tank and Lines (310-01 Fuel Tank and Lines, Diagnosis and Testing). CLEAR the DTC. TEST the system for normal operation.
D5: CHECK THE SIGNAL GROUND CIRCUIT FOR CONTINUITY	
	1 Disconnect the fuel pump module electrical connector CA105.
	2 Measure the resistance between electrical connector CA105 pin 3 (Y) and electrical connector FT2 pin 4 (Y)
	Is the resistance less than 5 ohms? **Yes** INSTALL a new fuel pump module. REFER to: Fuel Tank and Lines (310-01 Fuel Tank and Lines, Diagnosis and Testing). If the DTC is repeated, INSTALL a new fuel pump. REFER to: Fuel Tank and Lines (310-01 Fuel Tank and Lines, Diagnosis and Testing). CLEAR the DTC. TEST the system for normal operation. **No** REPAIR the circuit between electrical connector CA105 pin 3 (Y) and electrical connector FT2 pin 4 (Y). For additional

	information, refer to wiring diagrams. CLEAR the DTC. TEST the system for normal operation.

PINPOINT TEST E : FUEL PUMP FEEDBACK CIRCUITS. P1338	
TEST CONDITIONS	**DETAILS/RESULTS/ACTIONS**
E1: CHECK SIGNAL POWER CIRCUIT TO FUEL PUMP MODULE	
	1 Disconnect fuel pump module electrical connector CA105.
	2 Turn the ignition switch to the ON position.
	3 Measure the voltage between electrical connector CA105 pin 9 (NG) and GROUND.
	Is the voltage greater than 10 volts? **Yes** GO to E2. **No** GO to E4.
E2: CHECK FEEDBACK CIRCUIT TO FUEL PUMP MODULE	
	1 Reconnect fuel pump module electrical connector CA105.
	2 Turn the ignition switch to the CRANK position.
	3 Measure the voltage between ECM electrical connector EN16 pin 25 (W) and GROUND.
	Is the voltage greater than 4 volts? **Yes** No electrical fault in circuit. Recheck DTCs. **No** GO to E3.
E3: CHECK FEEDBACK CIRCUIT FOR CONTINUITY	
	1 Disconnect fuel pump module electrical connector CA105.
	2 Disconnect ECM electrical connector EN16.
	3 Measure the resistance between electrical connector CA105 pin 7 (W) and electrical connector EN16 pin 25 (W).
	Is the resistance less than 5 ohms? **Yes** GO to E4. **No** REPAIR the circuit between electrical connector CA105 pin 7 (W) and electrical connector EN16 pin 25 (W). For additional information, refer to wiring diagrams. CLEAR the DTC. TEST the system for normal operation.
E4: CHECK CONTROL CIRCUIT FOR CONTINUITY	
	1 Measure the resistance between electrical connector CA105 pin 1 (N) and electrical connector EN16 pin 27 (N).
	Is the resistance less than 5 ohms? **Yes** INSTALL a new fuel pump module. REFER to: Fuel Tank and Lines (310-01 Fuel Tank and Lines, Diagnosis and Testing). CLEAR the DTC. TEST the system for normal operation. If the DTC is repeated, INSTALL a new ECM. REFER to: Electronic Engine Controls - 2.5L NA V6 - AJV6/3.0L NA V6 - AJ27, VIN Range: E96603->J28492 (303-14A Electronic Engine Controls - 2.0L NA V6 - AJV6/2.5L NA V6 - AJV6/3.0L NA V6 - AJ27, Diagnosis and Testing). Before replacing a ECM, contact Dealer technical support. **No** REPAIR the circuit between electrical connector CA105 pin 1 (N) and electrical connector EN16 pin 27 (N). For additional information, refer to wiring diagrams. CLEAR the DTC. TEST the system for normal operation.

PINPOINT TEST F : THROTTLE CONTROL POSITION ERROR. P1224, P1229	
TEST CONDITIONS	**DETAILS/RESULTS/ACTIONS**
F1: CHECK THROTTLE CONTROL CIRCUIT FOR CONTINUITY	
	1 Disconnect throttle motor electrical connector EN10.
	2 Disconnect ECM electrical connector EN16.
	3 Measure the resistance between ECM electrical connector EN16 pin 80 (G) and throttle motor electrical connector EN10 pin 2 (G).
	Is the resistance less than 5 ohms? **Yes** GO to F2. **No** REPAIR the circuit between ECM electrical connector EN16 pin 80 (G) and throttle motor electrical connector EN10 pin 2 (G). For additional information, refer to wiring diagrams. CLEAR the DTC. TEST the system for normal operation.
F2: CHECK THROTTLE CONTROL CIRCUIT FOR CONTINUITY	
	1 Measure the resistance between ECM electrical connector EN16 pin 106 (R) and throttle motor electrical connector EN10 pin 1 (R).
	Is the resistance less than 5 ohms? **Yes** INSTALL a new ECM. REFER to: Electronic Engine Controls - 2.5L NA V6 - AJV6/3.0L NA V6 - AJ27, VIN Range: E96603->J28492 (303-14A Electronic Engine Controls - 2.0L NA V6 - AJV6/2.5L NA V6 - AJV6/3.0L NA V6 - AJ27, Diagnosis and Testing). CLEAR the DTC. TEST the system for normal operation. **No** REPAIR the circuit between ECM electrical connector EN16 pin 106 (R) and throttle motor electrical connector EN10 pin 1 (R). For additional information, refer to wiring diagrams. CLEAR the DTC. TEST the system for normal operation.

Published: 11-May-2011

Fuel Charging and Controls - 2.0L NA V6 - AJV6 / 2.5L NA V6 - AJV6 / 3.0L NA V6 - AJ27 - Fuel Charging and Controls2.5L NA V6 - AJV6 / 3.0L NA V6 - AJ27, VIN Range: J28493->V99999

Diagnosis and Testing

1. **1.** Verify the customer concern by operating the system.
2. **2.** Visually inspect for obvious signs of mechanical or electrical damage.
3. **3.** If an obvious cause for an observed or reported concern is found, correct the cause (if possible) before proceeding to the next step.
4. **4.** If the concern is not visually evident, use a fault code reader to retrieve fault codes before proceeding to the Symptom Chart.

Symptom Chart

DTC	Condition	Possible Causes	Action
P0171	Right-hand bank combustion too lean	• Engine misfire • Air intake leak between MAF sensor and throttle • Fuel injector restriction • Fuel filter/system restriction • fuel pulse damper failure (low fuel pressure) • Low fuel pump output • HO2S (1/1; ½) harness wiring condition fault • Exhaust leak (before catalyst) • engine control module (ECM) receiving incorrect signal from one or more of the following components; ECT sensor, MAF sensor, IAT sensor, IP sensor, EFT sensor, TP sensor	REFER to: Engine Ignition - 2.5L NA V6 - AJV6/3.0L NA V6 - AJ27 (303-07A Engine Ignition - 2.0L NA V6 - AJV6/2.5L NA V6 - AJV6/3.0L NA V6 - AJ27, Diagnosis and Testing), Engine (303-01A Engine - 2.0L NA V6 - AJV6/2.5L NA V6 - AJV6/3.0L NA V6 - AJ27, Diagnosis and Testing), Exhaust System (309-00 Exhaust System, Diagnosis and Testing), Electronic Engine Controls - 2.5L NA V6 - AJV6/3.0L NA V6 - AJ27, VIN Range: J28493->V99999 (303-14A Electronic Engine Controls - 2.0L NA V6 - AJV6/2.5L NA V6 - AJV6/3.0L NA V6 - AJ27, Diagnosis and Testing).
P0172	Right-hand bank combustion too rich	• Restricted air filter • Leaking fuel injector(s) • fuel pulse damper failure (high fuel pressure) • ECM receiving incorrect signal from one or more of the following components; ECT sensor, MAF sensor, IAT sensor, IP sensor, EFT sensor, TP sensor	REFER to: Intake Air Distribution and Filtering (303-12A Intake Air Distribution and Filtering - 2.0L NA V6 - AJV6/2.5L NA V6 - AJV6/3.0L NA V6 - AJ27, Diagnosis and Testing), Electronic Engine Controls - 2.5L NA V6 - AJV6/3.0L NA V6 - AJ27, VIN Range: J28493->V99999 (303-14A Electronic Engine Controls - 2.0L NA V6 - AJV6/2.5L NA V6 - AJV6/3.0L NA V6 - AJ27, Diagnosis and Testing).
P0174	Left-hand bank combustion too lean	• Engine misfire • Air intake leak between MAF sensor and throttle • Fuel injector restriction • Fuel filter/system restriction • fuel pulse damper failure (low fuel pressure) • Low fuel pump output • HO2S (2/1; 2/2) harness wiring condition fault • Exhaust leak (before catalyst) • ECM receiving incorrect signal from one or more of the following components; ECT sensor, MAF sensor, IAT sensor, IP sensor, EFT sensor, TP sensor	REFER to: Engine Ignition - 2.5L NA V6 - AJV6/3.0L NA V6 - AJ27 (303-07A Engine Ignition - 2.0L NA V6 - AJV6/2.5L NA V6 - AJV6/3.0L NA V6 - AJ27, Diagnosis and Testing), Engine (303-01A Engine - 2.0L NA V6 - AJV6/2.5L NA V6 - AJV6/3.0L NA V6 - AJ27, Diagnosis and Testing), Exhaust System (309-00 Exhaust System, Diagnosis and Testing), Electronic Engine Controls - 2.5L NA V6 - AJV6/3.0L NA V6 - AJ27, VIN Range: J28493->V99999 (303-14A Electronic Engine Controls - 2.0L NA V6 - AJV6/2.5L NA V6 - AJV6/3.0L NA V6 - AJ27, Diagnosis and Testing).
P0175	Left-hand bank combustion too rich	• Restricted air filter • Leaking fuel injector(s) • fuel pulse damper failure (high fuel pressure) • ECM receiving incorrect signal from one or more of the following components; ECT sensor, MAF sensor, IAT sensor, IP sensor, EFT sensor, TP sensor	REFER to: Intake Air Distribution and Filtering (303-12A Intake Air Distribution and Filtering - 2.0L NA V6 - AJV6/2.5L NA V6 - AJV6/3.0L NA V6 - AJ27, Diagnosis and Testing), Electronic Engine Controls - 2.5L NA V6 - AJV6/3.0L NA V6 - AJ27, VIN Range: J28493->V99999 (303-14A Electronic Engine Controls - 2.0L NA V6 - AJV6/2.5L NA V6 - AJV6/3.0L NA V6 - AJ27, Diagnosis and Testing).
P1251, P1631, P1657, P1658	Concern with throttle motor relay	• Throttle motor relay • Throttle motor relay circuit	REFER to: Electronic Engine Controls - 2.5L NA V6 - AJV6/3.0L NA V6 - AJ27, VIN Range: J28493->V99999 (303-14A Electronic Engine Controls - 2.0L NA V6 - AJV6/2.5L NA V6 - AJV6/3.0L NA V6 - AJ27, Diagnosis and Testing).
P0112, P0113	Concern with IAT sensor	• Engine faulty leading to overheating • Intake air temperature (IAT) sensor fault • Harness fault • ECM failure	REFER to: Acceleration Control (310-02 Acceleration Control, Diagnosis and Testing), Electronic Engine Controls - 2.5L NA V6 - AJV6/3.0L NA V6 - AJ27, VIN Range: J28493->V99999 (303-14A Electronic Engine Controls - 2.0L NA V6 - AJV6/2.5L NA V6 - AJV6/3.0L NA V6 - AJ27, Diagnosis and Testing).
P0121, P0122, P0123, P0222, P0223	Concern with throttle position (TP) sensor	• TP sensor fault • Harness fault • ECM failure	REFER to: Electronic Engine Controls - 2.5L NA V6 - AJV6/3.0L NA V6 - AJ27, VIN Range: J28493->V99999 (303-14A Electronic Engine Controls - 2.0L NA V6 - AJV6/2.5L NA V6 - AJV6/3.0L NA V6 - AJ27, Diagnosis and Testing).

DTC	Condition	Possible Causes	Action
P0116, P0117, P0118, P0125	Concern with engine coolant temperature	• Engine coolant temperature sensor • Harness fault • ECM failure	REFER to: Electronic Engine Controls - 2.5L NA V6 - AJV6/3.0L NA V6 - AJ27, VIN Range: J28493->V99999 (303-14A Electronic Engine Controls - 2.0L NA V6 - AJV6/2.5L NA V6 - AJV6/3.0L NA V6 - AJ27, Diagnosis and Testing).
P0201, P0202, P0203, P0204, P0205, P0206	Concern with fuel injectors	• Faulty injector(s) • Harness fault • ECM failure	REFER to: Electronic Engine Controls - 2.5L NA V6 - AJV6/3.0L NA V6 - AJ27, VIN Range: J28493->V99999 (303-14A Electronic Engine Controls - 2.0L NA V6 - AJV6/2.5L NA V6 - AJV6/3.0L NA V6 - AJ27, Diagnosis and Testing).
P0191	Concern with injection pressure (IP) sensor	• fuel pulse damper sensor • Harness fault • Fuel filter/system restriction • Fuel system leak • Incorrect fuel pump output • IP sensor to ECM sensing circuit; high resistance, open circuit, short circuit to high voltage • IP sensor to splice in sensor supply circuit; high resistance, open circuit • IP sensor to splice in sensor ground circuit; high resistance, open circuit • IP sensor to splice in sensor ground circuit; high resistance, open circuit, short circuit to ground, short circuit to high voltage • IP sensor failure	GO to Pinpoint Test B.
P0192	Concern with injection pressure (IP) sensor (low voltage/low pressure)	• IP sensor disconnected • IP sensor to ECM sensing circuit; open circuit or short circuit to ground • IP sensor to splice in sensor supply circuit; high resistance, open circuit • IP sensor failure	GO to Pinpoint Test B.
P0193	Concern with injection pressure (IP) sensor (high voltage/high pressure)	• IP sensor to ECM wiring (supply/sense) short circuit to each other • IP sensor to ECM sense circuit; short circuit to high voltage • IP sensor to splice in sensor ground circuit; open circuit • IP sensor failure	GO to Pinpoint Test B.
P0460	Concern with fuel level sensors	• Fuel level sensor to instrument cluster circuit(s); intermittent short circuit, open circuit, high resistance • Fuel level sensor failure • Instrument cluster fault	GO to Pinpoint Test C.
P0627, P0628, P0629	Concern with fuel pump commands	• ECM to fuel pump control module control and/or feedback circuits; open circuit, short circuit, high resistance • Fuel pump control module failure	GO to Pinpoint Test D.
P2635	Concern with fuel pump operation	• ECM to fuel pump control module control and/or feedback circuits; open circuit, short circuit, high resistance • Fuel pump control module failure	GO to Pinpoint Test E.
P1250, P1254	Concern with throttle valve return spring and "limp-home" spring	Throttle body	These DTCs can only be accurately diagnosed using the Jaguar approved diagnostic system. If this is not available, INSTALL a new throttle body. REFER to: Throttle Body (303-04A Fuel Charging and Controls - 2.0L NA V6 - AJV6/2.5L NA V6 - AJV6/3.0L NA V6 - AJ27, Removal and Installation). CLEAR the DTC, TEST the system for normal operation.
P2107	Concern with throttle "watchdog circuit" circuit	ECM	REFER to: Electronic Engine Controls - 2.5L NA V6 - AJV6/3.0L NA V6 - AJ27, VIN Range: J28493->V99999 (303-14A Electronic Engine Controls - 2.0L NA V6 - AJV6/2.5L NA V6 - AJV6/3.0L NA V6 - AJ27, Diagnosis and Testing).
P2118	Concern with throttle motor control circuit	• Throttle motor disconnected • Throttle motor to ECM drive circuits; short circuit or open circuit • Throttle motor failure	GO to Pinpoint Test F.
P2119	Concern with throttle control position	• Throttle adaptions not performed after battery disconnect • TP sensor disconnected • TP sensor to ECM sense circuits; open circuit, high resistance • Throttle motor relay failure • Throttle motor relay to ECM circuit fault • Throttle motor relay power supply open circuit • ECM ground circuit fault (relay coil drive) • Throttle motor to ECM drive circuits;	REFER to: Electronic Engine Controls - 2.5L NA V6 - AJV6/3.0L NA V6 - AJ27, VIN Range: J28493->V99999 (303-14A Electronic Engine Controls - 2.0L NA V6 - AJV6/2.5L NA V6 - AJV6/3.0L NA V6 - AJ27, Diagnosis and Testing). Individual Pinpoint tests for components and circuits listed

DTC	Condition	Possible Causes	Action
		open circuit, short circuit, high resistance • Throttle motor failure • Throttle body failure	
P1656	Concern with TP sensor amplifier circuit	ECM	REFER to: Electronic Engine Controls - 2.5L NA V6 - AJV6/3.0L NA V6 - AJ27, VIN Range: J28493->V99999 (303-14A Electronic Engine Controls - 2.0L NA V6 - AJV6/2.5L NA V6 - AJV6/3.0L NA V6 - AJ27, Diagnosis and Testing).

PINPOINT TEST A : FUEL INJECTORS, P0201, P0202, P0203, P0204, P0205, P0206.

• NOTE: The DTC set will indicate which cylinder injector or circuit is faulty. Only in the event of multiple cylinder misfires will it be necessary to check more than one injector or circuit, in which case, multiple DTCs will be set.

TEST CONDITIONS	DETAILS/RESULTS/ACTIONS
A1: CHECK THE INJECTOR COIL RESISTANCE	
	1 Turn the ignition switch to the OFF position.
	2 Disconnect the relevant injector electrical connector (IL1 to 6).
	3 Measure the resistance between the injector pins.
	Is the resistance between 12 and 16 ohms? **Yes** GO to A2. **No** INSTALL a new injector. REFER to: Fuel Injectors (303-04A Fuel Charging and Controls - 2.0L NA V6 - AJV6/2.5L NA V6 - AJV6/3.0L NA V6 - AJ27, Removal and Installation). CLEAR the DTC. TEST the system for normal operation.
A2: CHECK THE INJECTOR COIL INSULATION	
	1 Measure the resistance between the injector pin 1 and the injector body.
	2 Measure the resistance between the injector pin 2 and the injector body.
	Are both resistances greater than 10 OHMS? **Yes** GO to A3. **No** INSTALL a new injector. REFER to: Fuel Injectors (303-04A Fuel Charging and Controls - 2.0L NA V6 - AJV6/2.5L NA V6 - AJV6/3.0L NA V6 - AJ27, Removal and Installation). CLEAR the DTC. TEST the system for normal operation.
A3: CHECK THE INJECTOR SUPPLY VOLTAGE	
	1 Turn the ignition switch to the ON position.
	2 Disconnect the relevant injector harness electrical connector (IL1 to 6).
	3 Measure the voltage between the relevant injector harness electrical connector (IL1 to 6) pin 2 and GROUND.
	Is the voltage greater than 12 Volts? **Yes** GO to A4. **No** REPAIR the circuit between the relevant injector harness electrical connector, (IL1 to 6) pin 2 and battery. This circuit includes the power distribution fuse box, fuse 41, and the EMS control relay. For additional information, refer to wiring diagrams. CLEAR DTC. TEST the system for normal operation.
A4: CHECK THE INJECTOR GROUND CIRCUIT	
	1 Turn the ignition switch to the OFF position.
	2 Disconnect the ECM electrical connector EN16.
	3 Measure the resistance between the relevant injector harness electrical connector (IL1 to 6) pin 1 and EN16 pins as follows - • Injector 1 pin 1 (NW) and ECM pin 115. • Injector Cyl 3 pin 1 (N) and ECM pin 114. • Injector Cyl 5 pin 1 (NR) and ECM pin 113. • Injector Cyl 2 pin 1 (NU) and ECM pin 120. • Injector Cyl 4 pin 1 (NG) and ECM pin 119. • Injector Cyl 6 pin 1 (NY) and ECM pin 118.
	Is the resistance less than 5 ohms? **Yes** GO to A5. **No** REPAIR the circuit between the relevant injector harness electrical connector pin 1 and the ECM electrical connector. For additional information, refer to wiring diagrams. CLEAR the DTC. TEST the system for normal operation.
A5: CHECK THE INJECTOR GROUND CIRCUIT FOR SHORT CIRCUIT TO BATTERY	
	1 Measure the voltage between the relevant injector harness electrical connector (IL1 to 6) pin 1 and GROUND.
	Is the voltage greater than 1 volt? **Yes** REPAIR the short circuit. For additional information, refer to wiring diagrams. CLEAR the DTC. TEST the system for normal operation. **No** GO to A6.
A6: CHECK THE INJECTOR GROUND CIRCUIT FOR SHORT CIRCUIT TO GROUND	
	1 Measure the resistance between the relevant injector harness electrical connector (IL1 to 6) pin 1 and GROUND.
	Is the resistance less than 10,000 ohms? **Yes** REPAIR the short circuit. For additional information, refer to wiring diagrams. CLEAR the DTC. TEST the system for normal operation. **No** INSTALL a new ECM. REFER to: Engine Control Module (ECM) (303-14A Electronic Engine Controls - 2.0L NA V6 - AJV6/2.5L NA V6 - AJV6/3.0L NA V6 - AJ27, Removal and Installation).

	Before replacing a ECM, contact Dealer technical support.

PINPOINT TEST B : FUEL PULSE DAMPER SENSOR. P0190, P0192, P0193	
TEST CONDITIONS	**DETAILS/RESULTS/ACTIONS**
B1: CHECK THE FUEL PULSE DAMPER SENSOR SUPPLY VOLTAGE	
	1 Turn the ignition switch to the OFF position.
	2 Disconnect the fuel pulse damper sensor electrical connector IL007.
	3 Turn the ignition switch to the ON position.
	4 Measure the supply voltage to the fuel pulse damper sensor electrical connector IL007 pin 1 (YG) and GROUND.
	Is the supply voltage between 4.5 and 5.5 volts? **Yes** GO to B2. **No** REPAIR the circuit between IL007 pin 1, (YG) and ENS07. For additional information, refer to wiring diagrams. CLEAR the DTC. TEST the system for normal operation. If the DTC is repeated, INSTALL a new ECM. REFER to: Engine Control Module (ECM) (303-14A Electronic Engine Controls - 2.0L NA V6 - AJV6/2.5L NA V6 - AJV6/3.0L NA V6 - AJ27, Removal and Installation). Before replacing a ECM, contact Dealer technical support. (The fault could be in any of the components or sensors in the 5 volt supply circuit, or the ECM)
B2: CHECK THE FUEL PULSE DAMPER SENSOR GROUND CIRCUIT FOR OPEN CIRCUIT	
	1 Turn the ignition switch to the OFF position.
	2 Measure the resistance between the fuel pulse damper sensor electrical connector IL007 pin 2, (WG) and GROUND.
	Is the resistance greater than 10,000 ohms? **Yes** REPAIR the circuit between IL007 pin 2 (WG) and ground at ILS02. For additional information, refer to wiring diagrams. CLEAR the DTC. TEST the system for normal operation. **No** GO to B3.
B3: CHECK THE FUEL PULSE DAMPER SENSOR SIGNAL CIRCUIT FOR OPEN CIRCUIT	
	1 Disconnect the ECM electrical connector EN16.
	2 Measure the resistance between the fuel pulse damper sensor electrical connector IL007 pin 3 (WG) and EN16 pin 73.
	Is the resistance greater than 5 ohms? **Yes** REPAIR the circuit between IL007 pin 3 (WG) and EN016 pin 73 (WG). For additional information, refer to wiring diagrams. CLEAR the DTC. TEST the system for normal operation. **No** GO to B4.
B4: CHECK THE FUEL PULSE DAMPER SENSOR SIGNAL CIRCUIT FOR SHORT TO GROUND	
	1 Measure the resistance between the fuel pulse damper sensor electrical connector IL007 pin 3 (WG) and GROUND.
	Is the resistance less than 10,000 ohms? **Yes** REPAIR the circuit between IL007 pin 3 (WG) and EN016 pin 73 (WG). For additional information, refer to wiring diagrams. CLEAR the DTC. TEST the system for normal operation. **No** GO to B5.
B5: CHECK THE FUEL PULSE DAMPER SENSOR CIRCUIT RESISTANCE	
	1 Disconnect the fuel pulse damper sensor electrical connector IL007.
	2 Measure the resistance between the fuel pulse damper sensor pins 1 and 2.
	Is the resistance between 10,000 and 12,000 ohms? **Yes** GO to B6. **No** Install a new fuel pulse damper sensor. REFER to: Fuel Pulse Damper - 2.5L NA V6 - AJV6/3.0L NA V6 - AJ27 (303-04A Fuel Charging and Controls - 2.0L NA V6 - AJV6/2.5L NA V6 - AJV6/3.0L NA V6 - AJ27, Removal and Installation). CLEAR the DTC. TEST the system for normal operation.
B6: CHECK THE FUEL PULSE DAMPER SENSOR CIRCUIT RESISTANCE	
	1 Measure the resistance between the fuel pulse damper sensor pins 2 and 3.
	Is the resistance between 22,000 and 33,000 ohms? **Yes** GO to B7. **No** Install a new fuel pulse damper sensor. REFER to: Fuel Pulse Damper - 2.5L NA V6 - AJV6/3.0L NA V6 - AJ27 (303-04A Fuel Charging and Controls - 2.0L NA V6 - AJV6/2.5L NA V6 - AJV6/3.0L NA V6 - AJ27, Removal and Installation). CLEAR the DTC. TEST the system for normal operation.
B7: CHECK THE FUEL PULSE DAMPER SENSOR CIRCUIT RESISTANCE	
	1 Measure the resistance between the fuel pulse damper sensor pins 1 and 3.
	Is the resistance between 22,000 and 33,000 ohms? **Yes** Install a new ECM. REFER to: Electronic Engine Controls - 2.5L NA V6 - AJV6/3.0L NA V6 - AJ27, VIN Range: J28493->V99999 (303-14A Electronic Engine Controls - 2.0L NA V6 - AJV6/2.5L NA V6 - AJV6/3.0L NA V6 - AJ27, Diagnosis and Testing). Before replacing a ECM, contact Dealer technical support. **No** Install a new fuel pulse damper sensor. REFER to: Fuel Pulse Damper - 2.5L NA V6 - AJV6/3.0L NA V6 - AJ27 (303-04A Fuel Charging and Controls - 2.0L NA V6 - AJV6/2.5L NA V6 - AJV6/3.0L NA V6 - AJ27, Removal and Installation). CLEAR the DTC. TEST the system for normal operation.

PINPOINT TEST C : FUEL LEVEL SENSORS. P0460	
TEST CONDITIONS	**DETAILS/RESULTS/ACTIONS**
C1: CHECK THE FUEL LEVEL SENSOR (1) GROUND CIRCUIT	
	1 Disconnect the fuel level sensor electrical connector FT2.

	2 Turn the ignition switch to the ON position.
	3 Measure the resistance between electrical connector FT2 pin 3 (B) and GROUND.
	Is the resistance less than 5 ohms? **Yes** GO to C2. **No** REPAIR the circuit between electrical connector FT2 pin 3 (B) and GROUND. For additional information, refer to wiring diagrams. CLEAR the DTC. TEST the system for normal operation.
C2: CHECK THE FUEL LEVEL SENSOR (1) SIGNAL CIRCUIT	
	1 Disconnect the Instrument cluster electrical connector IP10.
	2 Measure the resistance between electrical connector FT2 pin 1 (WU) and electrical connector IP10 pin 7 (WU).
	Is the resistance less than 5 ohms? **Yes** GO to C3. **No** REPAIR the circuit between FT2 pin 1 (WU) and IP10 pin 7 (WU). For additional information, refer to wiring diagrams. CLEAR the DTC. TEST the system for normal operation.
C3: CHECK THE FUEL LEVEL SENSOR (1) RHEOSTAT (EMPTY)	
	1 Empty the fuel tank.
	2 Measure the resistance between pins 1 and 3 of the fuel level sensor.
	Is the resistance 20 ohms? **Yes** GO to C4. **No** INSTALL a new fuel level sensor. REFER to: (310-01 Fuel Tank and Lines) Fuel Level Sender LH - 2.5L NA V6 - AJV6/3.0L NA V6 - AJ27 (Removal and Installation), Fuel Level Sender RH - 2.5L NA V6 - AJV6/3.0L NA V6 - AJ27 (Removal and Installation). CLEAR the DTC. TEST the system for normal operation.
C4: CHECK THE FUEL LEVEL SENSOR (1) RHEOSTAT (FULL)	
	1 Fill the fuel tank.
	2 Measure the resistance between pins 1 and 3 of the fuel level sensor.
	Is the resistance 160 ohms? **Yes** INSTALL a new instrument cluster. REFER to: Instrument Cluster (413-01 Instrument Cluster, Removal and Installation). CLEAR the DTC. TEST the system for normal operation. **No** INSTALL a new fuel level sensor. REFER to: Fuel Level Sender LH - 2.5L NA V6 - AJV6/3.0L NA V6 - AJ27 (310-01 Fuel Tank and Lines, Removal and Installation) / Fuel Level Sender RH - 2.5L NA V6 - AJV6/3.0L NA V6 - AJ27 (310-01 Fuel Tank and Lines, Removal and Installation). CLEAR the DTC. TEST the system for normal operation.
C5: CHECK THE FUEL LEVEL SENSOR (2) GROUND CIRCUIT	
	1 Disconnect the fuel level sensor electrical connector, FT3.
	2 Turn the ignition switch to the ON position.
	3 Measure the resistance between electrical connector FT3, pin 3 (B) and GROUND.
	Is the resistance less than 5 ohms? **Yes** GO to C6. **No** REPAIR the circuit between FT3 pin 3 (B) and ground. For additional information, refer to wiring diagrams. CLEAR the DTC. TEST the system for normal operation.
C6: CHECK THE FUEL LEVEL SENSOR (2) SIGNAL CIRCUIT	
	1 Disconnect the instrument cluster electrical connector IP10.
	2 Measure the resistance between electrical connector FT3 pin 1 (WB) and electrical connector IP10 pin 8 (WB).
	Is the resistance less than 5 ohms? **Yes** GO to C7. **No** REPAIR the circuit between FT3 pin 1 (WB) and IP10 pin 8 (WB). For additional information, refer to wiring diagrams. CLEAR the DTC. TEST the system for normal operation.
C7: CHECK THE FUEL LEVEL SENSOR (2) RHEOSTAT (EMPTY)	
	1 Empty the fuel tank.
	2 Measure the resistance between pins 1 and 3 of the fuel level sensor.
	Is the resistance 20 ohms? **Yes** GO to C8. **No** INSTALL a new fuel level sensor. REFER to: Fuel Level Sender LH - 2.5L NA V6 - AJV6/3.0L NA V6 - AJ27 (310-01 Fuel Tank and Lines, Removal and Installation) / Fuel Level Sender RH - 2.5L NA V6 - AJV6/3.0L NA V6 - AJ27 (310-01 Fuel Tank and Lines, Removal and Installation). CLEAR the DTC. TEST the system for normal operation.
C8: CHECK THE FUEL LEVEL SENSOR (2) RHEOSTAT (FULL)	
	1 Fill the fuel tank.
	2 Measure the resistance between pins 1 and 3 of the fuel level sensor.
	Is the resistance 160 ohms? **Yes** INSTALL a new instrument cluster. REFER to: Instrument Cluster (413-01 Instrument Cluster, Removal and Installation). CLEAR the DTC. TEST the system for normal operation. **No** INSTALL a new fuel level sensor. REFER to: Fuel Level Sender LH - 2.5L NA V6 - AJV6/3.0L NA V6 - AJ27 (310-01 Fuel Tank and Lines, Removal and Installation) / Fuel Level Sender RH - 2.5L NA V6 - AJV6/3.0L NA V6 - AJ27 (310-01 Fuel Tank and Lines, Removal and Installation). CLEAR the DTC. TEST the system for normal operation.

PINPOINT TEST D : FUEL PUMP CONTROL MODULE. P0627, P0628, P0629

TEST CONDITIONS	DETAILS/RESULTS/ACTIONS
D1: CHECK SIGNAL POWER CIRCUIT TO FUEL PUMP MODULE	
	1 Disconnect fuel pump module electrical connector CA105.
	2 Turn the ignition switch to the ON position.
	3 Measure the voltage between electrical connector CA105 pin 9 (NG) and GROUND.
	Is the voltage greater than 10 volts? **Yes** GO to D2. **No** GO to D4.
D2: CHECK FEEDBACK CIRCUIT TO FUEL PUMP MODULE	
	1 Reconnect fuel pump module electrical connector CA105.
	2 Turn the ignition switch to the CRANK position.
	3 Measure the voltage between ECM electrical connector EN16 pin 25 (W) and GROUND.
	Is the voltage greater than 4 volts? **Yes** No electrical fault in circuit. Recheck DTCs. **No** GO to D3.
D3: CHECK FEEDBACK CIRCUIT FOR CONTINUITY	
	1 Disconnect fuel pump module electrical connector CA105.
	2 Disconnect ECM electrical connector EN16.
	3 Measure the resistance between electrical connector CA105 pin 7 (W) and electrical connector EN16 pin 25 (W).
	Is the resistance less than 5 ohms? **Yes** GO to D4. **No** REPAIR the circuit between electrical connector CA105 pin 7 (W) and electrical connector EN16 pin 25 (W). For additional information, refer to wiring diagrams. CLEAR the DTC. TEST the system for normal operation.
D4: CHECK CONTROL CIRCUIT FOR CONTINUITY	
	1 Measure the resistance between electrical connector CA105 pin 1 (N) and electrical connector EN16 pin 27 (N).
	Is the resistance less than 5 ohms? **Yes** INSTALL a new fuel pump module. REFER to: Fuel Pump Module - 2.5L NA V6 - AJV6/3.0L NA V6 - AJ27 (310-01 Fuel Tank and Lines, Removal and Installation). CLEAR the DTC. TEST the system for normal operation. If the DTC is repeated, INSTALL a new ECM. REFER to: Engine Control Module (ECM) (303-14A Electronic Engine Controls - 2.0L NA V6 - AJV6/2.5L NA V6 - AJV6/3.0L NA V6 - AJ27, Removal and Installation). Before replacing a ECM, contact Dealer technical support. **No** REPAIR the circuit between electrical connector CA105 pin 1 (N) and electrical connector EN16 pin 27 (N). For additional information, refer to wiring diagrams. CLEAR the DTC. TEST the system for normal operation.

PINPOINT TEST E : FUEL PUMP CONTROL MODULE. P2635

TEST CONDITIONS	DETAILS/RESULTS/ACTIONS
E1: CHECK THE POWER SUPPLY TO THE FUEL PUMP MODULE	
	1 Disconnect the fuel pump module electrical connector CA105.
	2 Turn the ignition switch to the ON position.
	3 Measure the voltage at CA105 pin 9 (NG)
	Is the voltage greater than 10 volts? **Yes** GO to E2. **No** REPAIR the circuit between electrical connector CA105 pin 9 (NG) and the ignition switch. CLEAR the DTC. TEST the system for normal operation. (This circuit includes the central junction fuse box, ignition relay, and the inertia switch. For additional information, refer to wiring diagrams)
E2: CHECK THE GROUND CIRCUIT TO THE FUEL PUMP MODULE	
	1 Measure the resistance between CA105 pin 2 (B) and ground.
	Is the resistance less than 5 ohms? **Yes** GO to E3. **No** REPAIR the circuit between electrical connector CA105 pin 2 (B) and GROUND. For additional information, refer to wiring diagrams. CLEAR the DTC. TEST the system for normal operation.
E3: CHECK THE SIGNAL GROUND CIRCUIT TO THE FUEL PUMP MODULE	
• NOTE: This test would be necessary if there were an EMC (Electro Magnetic Compatibility) issue with the vehicle.	
	1 Turn the ignition switch to the CRANK position.
	2 Measure the resistance between electrical connector CA105 pin 4 (BG) and ground.
	Is the resistance less than 5 ohms? **Yes** GO to E4. **No** REPAIR the circuit between electrical connector CA105 pin 4 (BG) and GROUND. For additional information, refer to wiring diagrams. CLEAR the DTC. TEST the system for normal operation. (This circuit includes the ECM)
E4: CHECK THE POWER SUPPLY CIRCUIT TO THE FUEL PUMP	
	1 Reconnect the fuel pump module electrical connector CA105.
	2 Disconnect the fuel pump electrical connector FT2.
	3 Turn the ignition switch to the ON position.
	4 Measure the voltage between electrical connector FT2 pin 2 (R) and GROUND.

	Is the voltage greater than 10 volts? **Yes** GO to E5. **No** INSTALL a new fuel pump module. REFER to: Fuel Pump Module - 2.5L NA V6 - AJV6/3.0L NA V6 - AJ27 (310-01 Fuel Tank and Lines, Removal and Installation). CLEAR the DTC. TEST the system for normal operation.
E5: CHECK THE SIGNAL GROUND CIRCUIT FOR CONTINUITY	
	1 Disconnect the fuel pump module electrical connector CA105.
	2 Measure the resistance between electrical connector CA105 pin 3 (Y) and electrical connector FT2 pin 4 (Y)
	Is the resistance less than 5 ohms? **Yes** INSTALL a new fuel pump module. REFER to: Fuel Pump Module - 2.5L NA V6 - AJV6/3.0L NA V6 - AJ27 (310-01 Fuel Tank and Lines, Removal and Installation). If the DTC is repeated, INSTALL a new fuel level sender. REFER to: Fuel Level Sender LH - 2.5L NA V6 - AJV6/3.0L NA V6 - AJ27 (310-01 Fuel Tank and Lines, Removal and Installation) / Fuel Level Sender RH - 2.5L NA V6 - AJV6/3.0L NA V6 - AJ27 (310-01 Fuel Tank and Lines, Removal and Installation). CLEAR the DTC. TEST the system for normal operation. **No** REPAIR the circuit between electrical connector CA105 pin 3 (Y) and electrical connector FT2 pin 4 (Y). For additional information, refer to wiring diagrams. CLEAR the DTC. TEST the system for normal operation.

PINPOINT TEST F : THROTTLE CONTROL CIRCUIT P2118.	
TEST CONDITIONS	**DETAILS/RESULTS/ACTIONS**
F1: CHECK THROTTLE CONTROL CIRCUIT FOR CONTINUITY	
	1 Disconnect throttle motor electrical connector EN10.
	2 Disconnect ECM electrical connector EN16.
	3 Measure the resistance between ECM electrical connector EN16 pin 80 (G) and throttle motor electrical connector EN95 pin 2 (G).
	Is the resistance less than 5 ohms? **Yes** GO to F2. **No** REPAIR the circuit between ECM electrical connector EN16 pin 80 (G) and throttle motor electrical connector EN95 pin 2 (G). For additional information, refer to wiring diagrams. CLEAR the DTC. TEST the system for normal operation.
F2: CHECK THROTTLE CONTROL CIRCUIT FOR CONTINUITY	
	1 Measure the resistance between ECM electrical connector EN16 pin 106 (R) and throttle motor electrical connector EN95 pin 1 (R).
	Is the resistance less than 5 ohms? **Yes** INSTALL a new ECM. REFER to: Engine Control Module (ECM) (303-14A Electronic Engine Controls - 2.0L NA V6 - AJV6/2.5L NA V6 - AJV6/3.0L NA V6 - AJ27, Removal and Installation). CLEAR the DTC. TEST the system for normal operation. **No** REPAIR the circuit between ECM electrical connector EN16 pin 106 (R) and throttle motor electrical connector EN95 pin 1 (R). For additional information, refer to wiring diagrams. CLEAR the DTC. TEST the system for normal operation.

www.JagDocs.com

Fuel Charging and Controls - 2.0L NA V6 - AJV6 / 2.5L NA V6 - AJV6 / 3.0L NA V6 - AJ27 - Fuel Charging Wiring Harness

Removal and Installation

Removal

Vehicles with 2.5L or 3.0L engine

1. Remove the intake manifold. For additional information, refer to Section 303-01A EngineSection 303-01B Engine.
2. Disconnect the spring lock coupling. For additional information, refer to Section 310-00 Fuel System - General Information.
3. Disconnect the engine coolant temperature (ECT) and fuel temperature sensor electrical connectors.

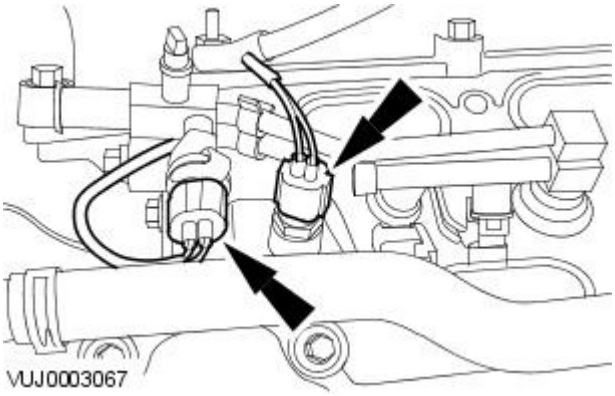

4. Disconnect the electrical connector.

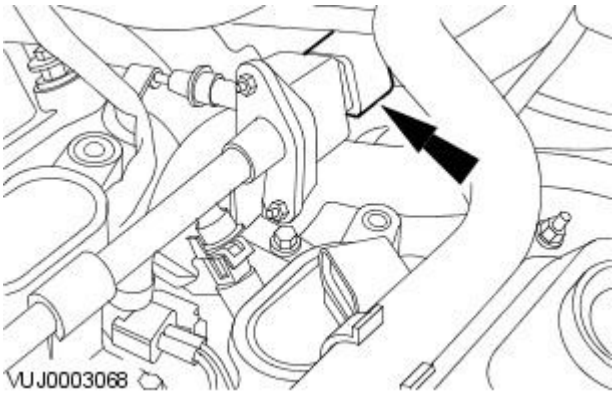

5. Detach the fuel pressure sensor vacuum line.

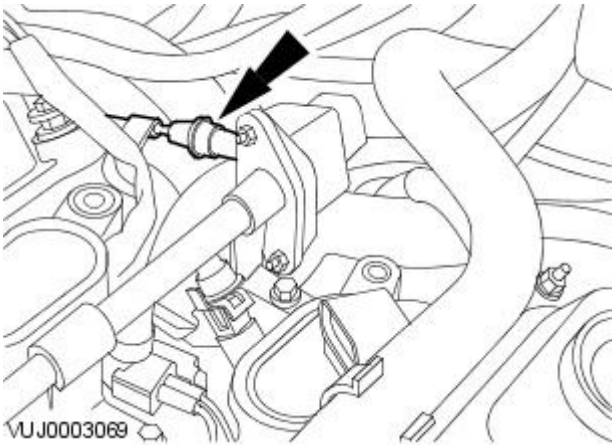

6. Detach the fuel charging wiring harness.

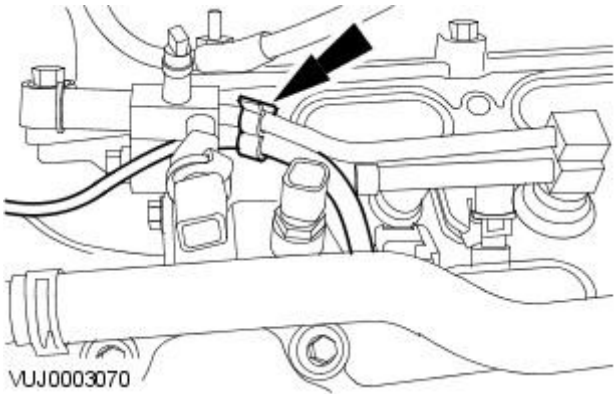

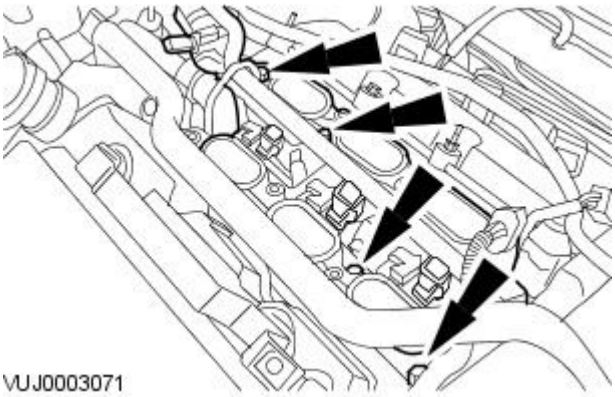

7. NOTE: Fuel may still be present in the fuel injection supply manifold.

Detach the fuel injection supply manifold and lower intake manifold and place to one side.

- Remove and discard the lower intake manifold O-ring seals.

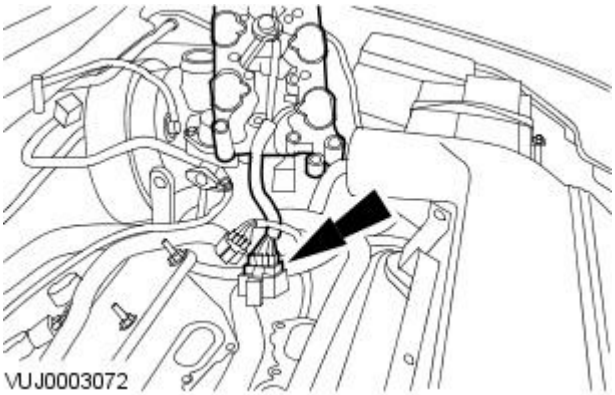

8. Remove the fuel injection supply manifold and lower intake manifold.

- Disconnect the electrical connector.

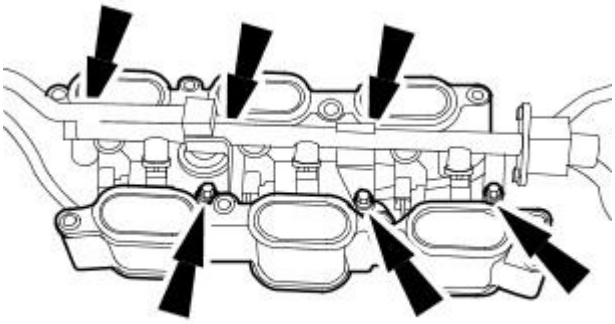

9. Remove the lower intake manifolds.

- Remove and discard the fuel injector O-ring seals.

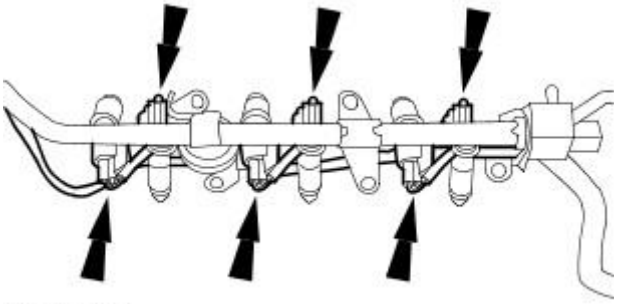

10. Remove the fuel charging wiring harness.

- Disconnect the electrical connectors.

Vehicles with 2.0L engine

11. Remove the fuel rail.
For additional information, refer to Fuel Injection Supply Manifold in this section.

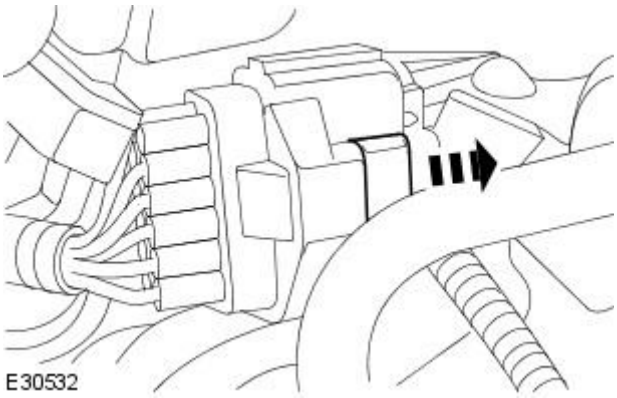

12. Disconnect the electrical connector.

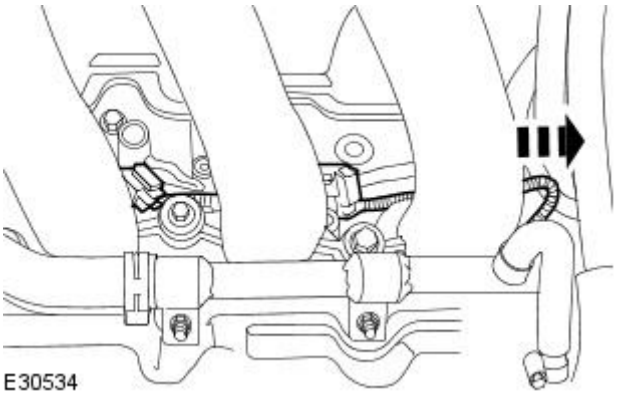

13. Remove the fuel charging wiring harness.

Installation

Vehicles with 2.0L engine

1. To install, reverse the removal procedure.

Vehicles with 2.5L or 3.0L engine

2. NOTE: Install new fuel injector O-ring seals.

• NOTE: Install new lower intake manifold O-ring seals.

To install, reverse the removal procedure.

- Tighten to 10 Nm.

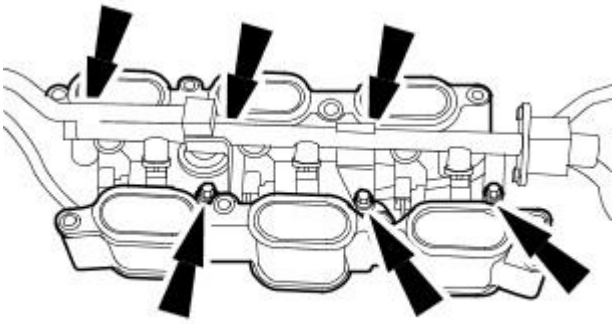

3. Tighten in the sequence shown.

- Tighten to 10 Nm.

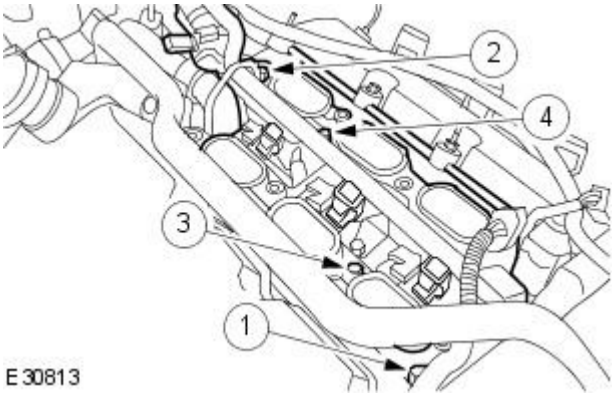

Fuel Charging and Controls - 2.0L NA V6 - AJV6 / 2.5L NA V6 - AJV6 / 3.0L NA V6 - AJ27 - Fuel Injection Supply Manifold

Removal and Installation

Removal

All vehicles

1. Disconnect the battery ground cable.
   For additional information, refer to Section 414-01 Battery, Mounting and Cables.
2. Disconnect the spring lock coupling.
   For additional information, refer to Section 310-00 Fuel System - General Information.

Vehicles with 2.5L or 3.0L engine

3. Remove the fuel injectors. For additional information, refer to Fuel Injectors.

Vehicles with 2.0L engine

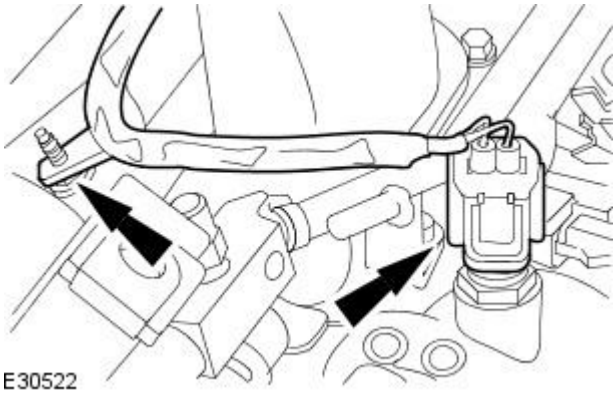

4. Disconnect the electrical connector.
   - Detach the harness.

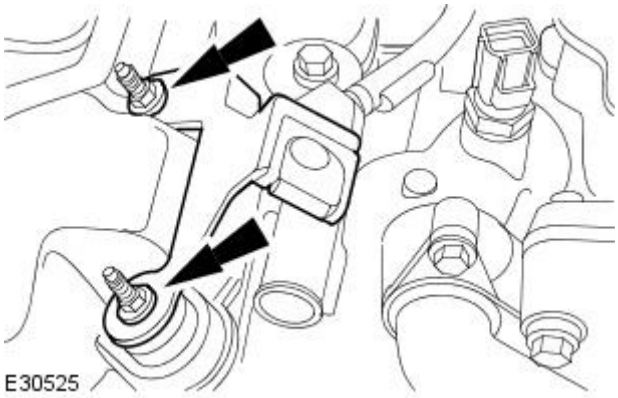

5. Remove the engine trim retaining bracket.

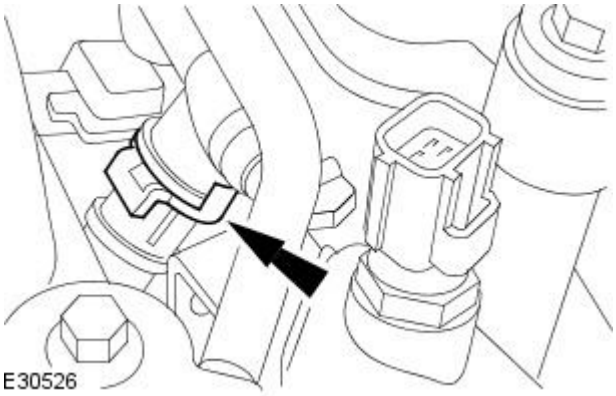

6. Remove the injector retaining clip.

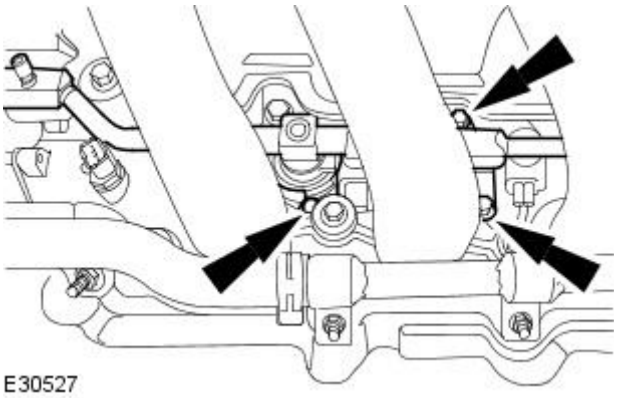

7. Remove the fuel rail retaining bolts.

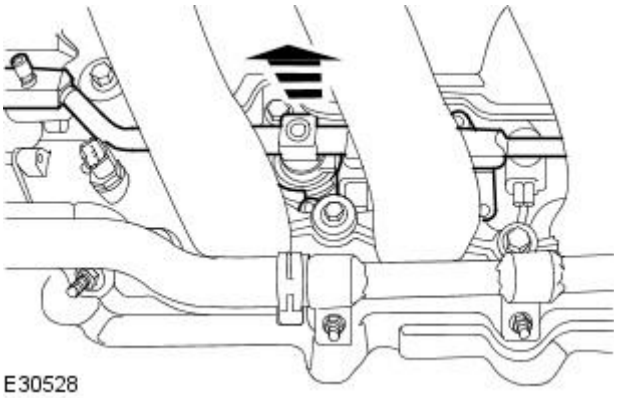

8. Disconnect the fuel rail from the injectors.

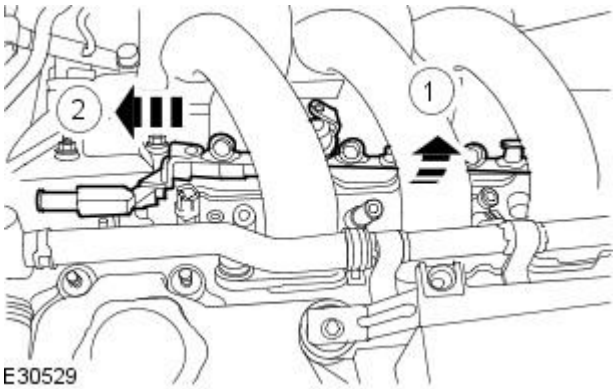

9. Remove the fuel injection rail.

1. Rotate the fuel injection rail through 180°.
2. Remove the fuel injection rail.

Vehicles with 2.5L or 3.0L engine

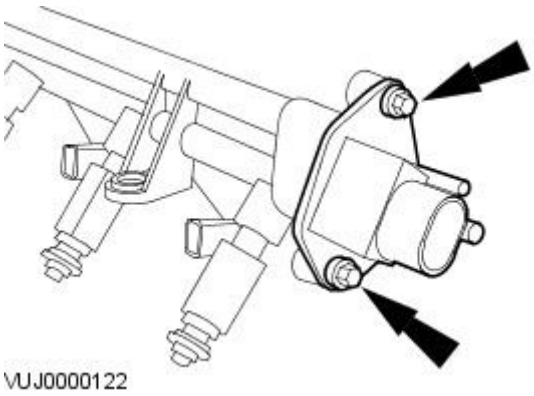

10. Remove the fuel pressure sensor.

- Remove and discard the gasket.

Installation

All vehicles

1. NOTE: Install new fuel injector O-ring seals.

To install, reverse the removal procedure.

- Lubricate the fuel injector O-ring seals with clean engine oil.

Vehicles with 2.5L or 3.0L engine

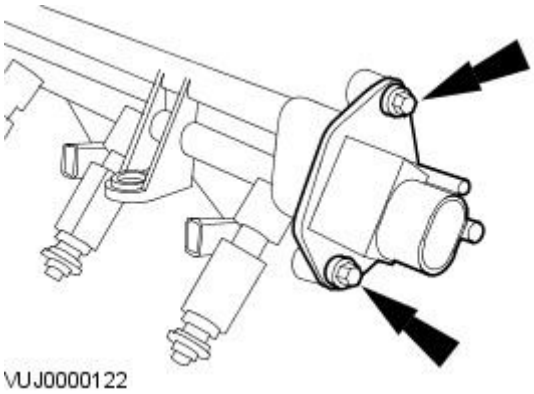

2. NOTE: Install a new gasket.

Tighten to 10 Nm.

Vehicles with 2.0L engine

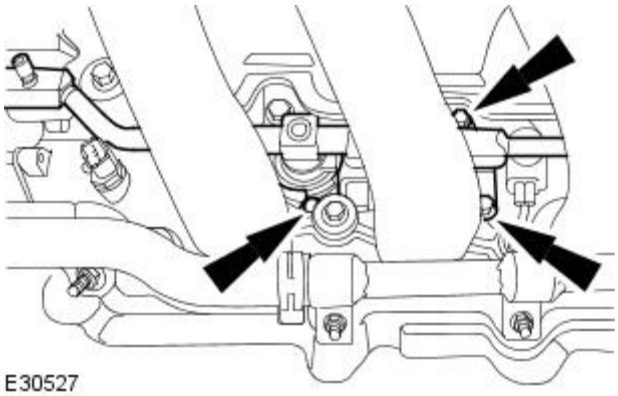

3. Tighten to 10 Nm.

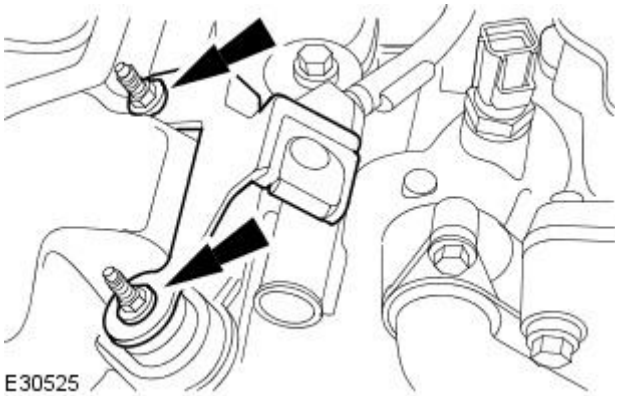

4. Tighten to 6 Nm.

Fuel Charging and Controls - 2.0L NA V6 - AJV6 / 2.5L NA V6 - AJV6 / 3.0L NA V6 - AJ27 - Fuel Injectors

Removal and Installation

Removal

Vehicles with 2.5L or 3.0L engine

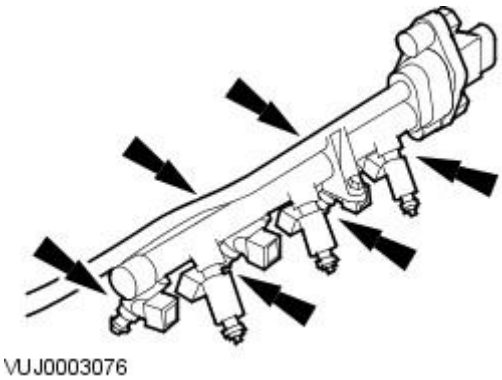

1. Remove the fuel charging wiring harness.
   For additional information, refer to Fuel Charging Wiring Harness in this section.
2. Remove the fuel injectors.
   - Remove the fuel injector retaining clips.

Vehicles with 2.0L engine

3. Remove the fuel injection supply manifold.
   For additional information, refer to Fuel Injection Supply Manifold in this section.
4. Detach the injectors from the lower intake manifold.

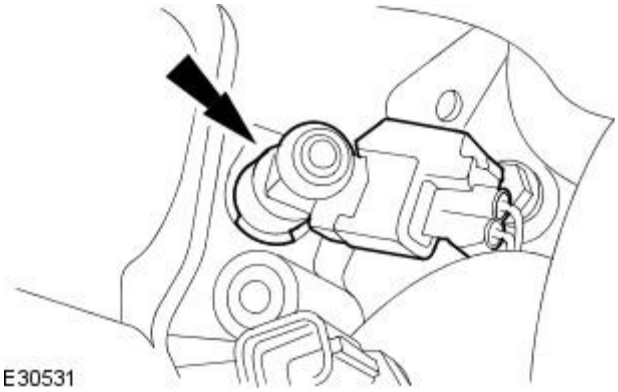

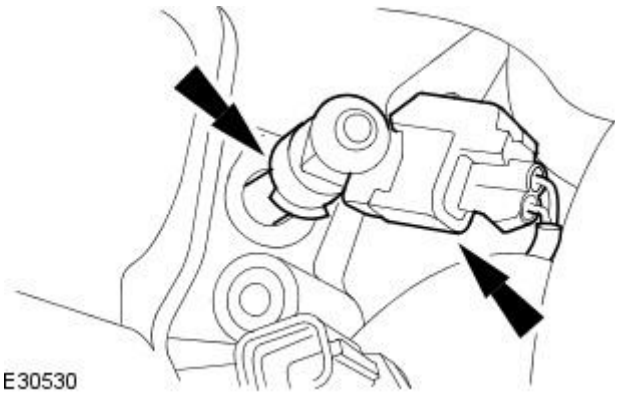

5. Remove the injectors.
   - Disconnect the electrical connectors.

All vehicles

VUJ0000564

6. Remove and discard the O-ring seals.

7.

Installation

VUJ0000564

1. NOTE: Install new fuel injector O-ring seals.

To install, reverse the removal procedure.

- Lubricate the fuel injector O-ring seals with clean engine oil.

Fuel Charging and Controls - 2.0L NA V6 - AJV6 / 2.5L NA V6 - AJV6 / 3.0L NA V6 - AJ27 - Fuel Pulse Damper2.5L NA V6 - AJV6 / 3.0L NA V6 - AJ27

Removal and Installation

Removal

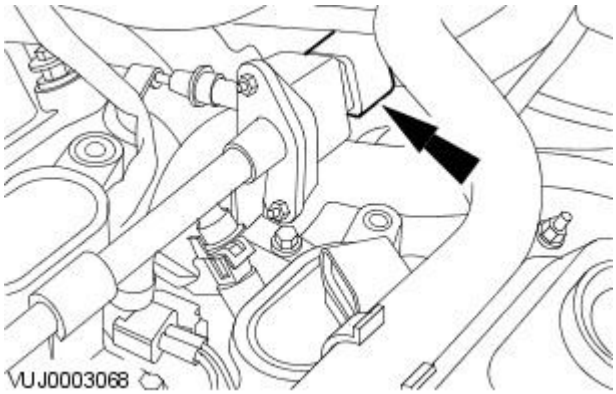

1. Remove the throttle body. For additional information, refer to Throttle Body.
2. Disconnect the electrical connector.

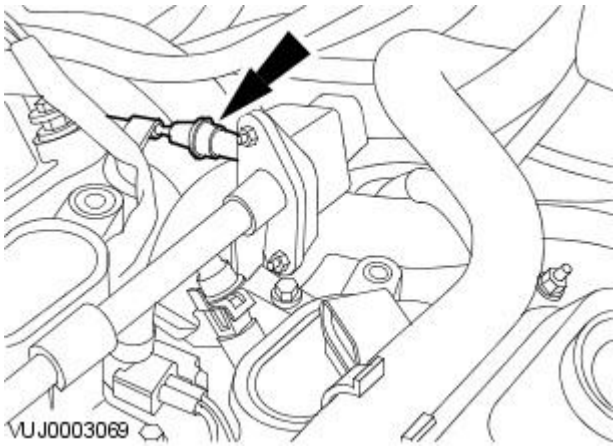

3. Detach the fuel pressure sensor vacuum line.

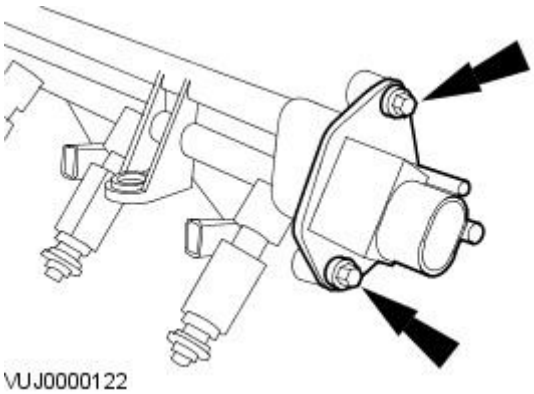

4. Remove the fuel pressure sensor.
   - Remove and discard the gasket.

Installation

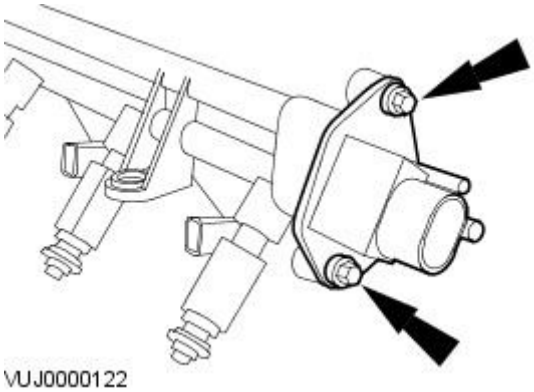

1. NOTE: Install a new gasket.

   To install, reverse the removal procedure.

   - Tighten to 10 Nm.

Fuel Charging and Controls - 2.0L NA V6 - AJV6 / 2.5L NA V6 - AJV6 / 3.0L NA V6 - AJ27 - Throttle Body

Removal and Installation

Removal

All vehicles

CAUTION: Do not attempt to clean the throttle body. The bore and the throttle plate has a special coating applied during manufacture which should not be removed.

1. Remove the air cleaner outlet pipe. For additional information, refer to Section 303-12A Intake Air Distribution and FilteringSection 303-12B Intake Air Distribution and Filtering.

Vehicles with 2.0L engine

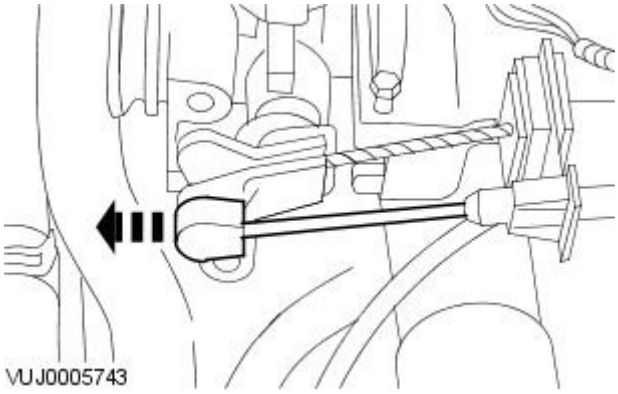

2. Disconnect the cruise control cable.

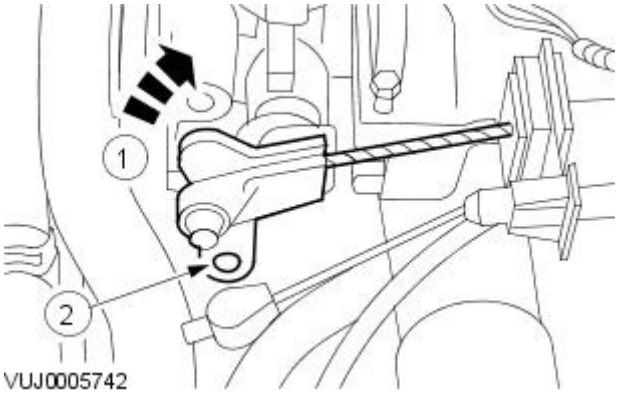

3. Disconnect the accelerator cable.
   1. Position the accelerator actuator to the open position.
   2. Disconnect the accelerator cable.

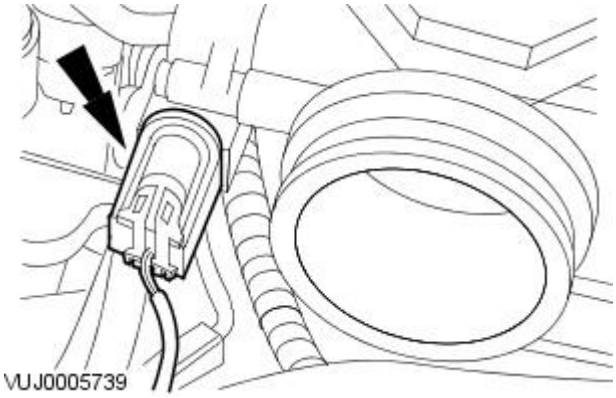

4. Disconnect the electrical connector.

5. Disconnect the electrical connector.

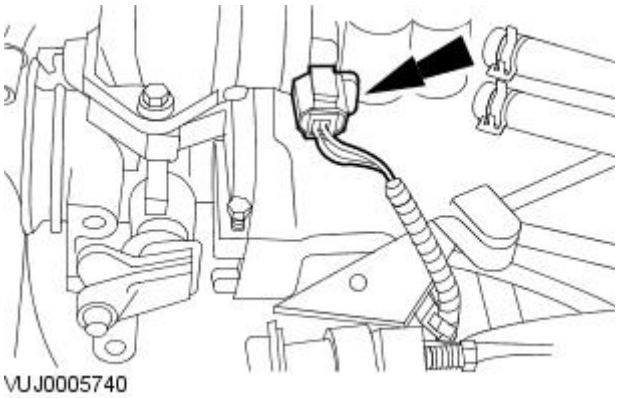

Vehicles with 2.5L or 3.0L engine

6. Disconnect the electrical connector.

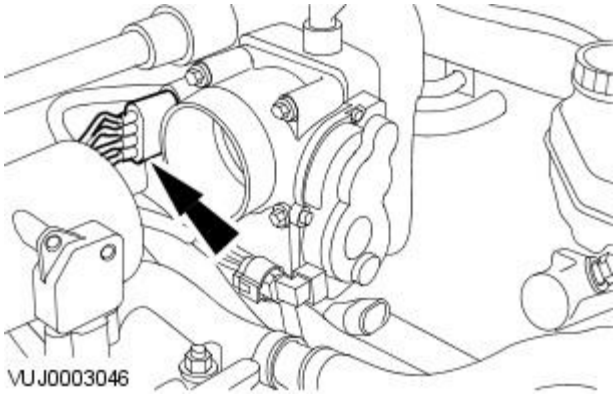

7. Disconnect the electrical connector.

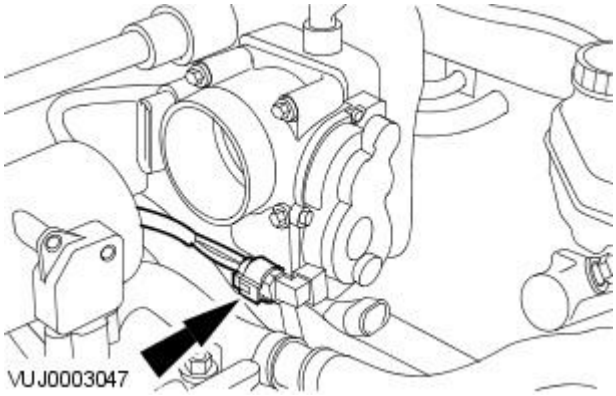

8. Remove the throttle body.

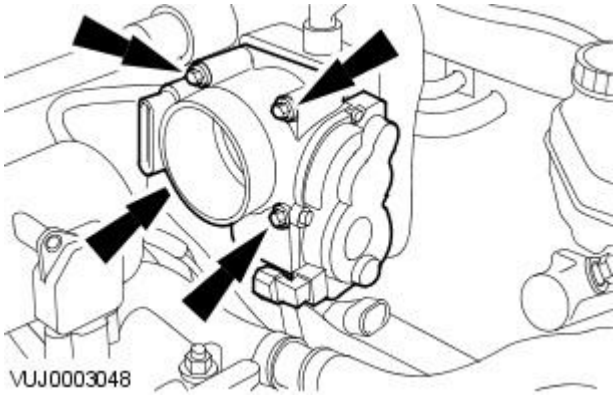

Vehicles with 2.0L engine

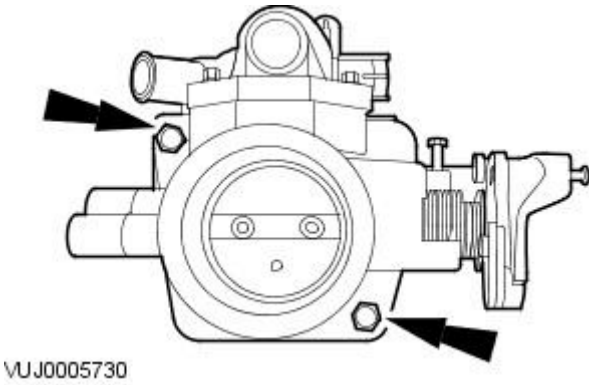

9. Remove the throttle body.

All vehicles

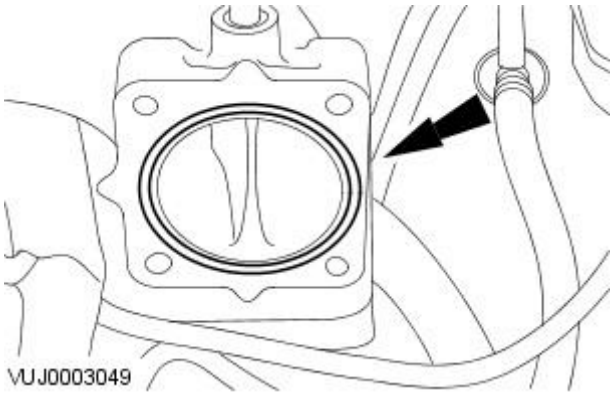

10. NOTE: 2.5L and 3.0L shown, 2.0L similar.

Remove and discard the O-ring seal.

Installation

All vehicles

CAUTION: Do not attempt to clean the throttle body. The bore and the throttle plate has a special coating applied during manufacture which should not be removed.

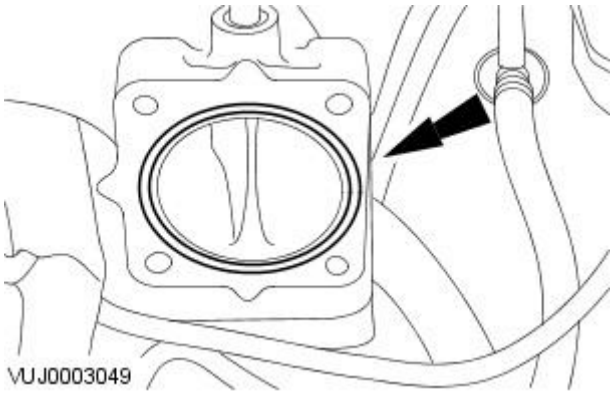

1. NOTE: 2.5L and 3.0L shown, 2.0L similar.

To install, reverse the removal procedure.

- Install a new O-ring seal.

Vehicles with 2.5L or 3.0L engine

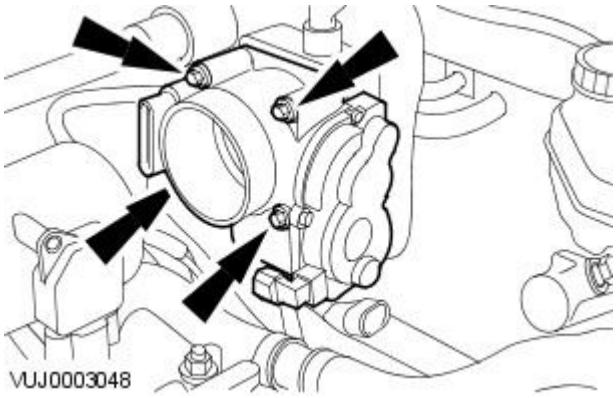

2. Tighten to 10 Nm.

Vehicles with 2.0L engine

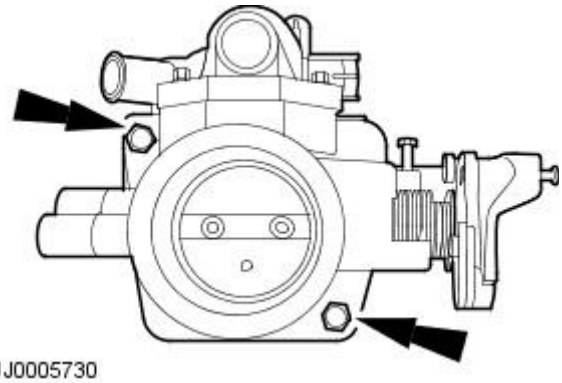

VUJ0005730

3. Tighten to 10 Nm.

Published: 11-May-2011

Fuel Charging and Controls - 2.0L Duratorq-TDCi / 2.2L Duratorq-TDCi (110kW / 150PS) - Puma -

Torque Specifications

Description	Nm	lb-ft	lb-in
High-pressure fuel supply lines	40	30	-
High-pressure fuel supply line support bracket retaining nut	8	-	71
Fuel injectors	47	35	-
Fuel injection supply manifold retaining bolts	23	17	-
Fuel injection supply manifold support bracket retaining bolts	14	10	-
Fuel pump shield lower retaining bolt	33	24	-
Fuel pump shield upper retaining bolts	8	-	71
Fuel pump support bracket to fuel pump retaining bolts	33	24	-
Fuel pump support bracket to cylinder block retaining bolts	23	17	-
Fuel pump retaining bolts	22	16	-
Fuel pump sprocket retaining bolts	32	24	-
Fuel supply line to fuel pump union retaining nut	20	15	-
Exhaust gas recirculation (EGR) valve retaining bolts	10	-	89
Intake manifold retaining bolts	15	11	-
Fuel return line venturi retaining bolt	6	-	53

Fuel Charging and Controls - 2.0L Duratorq-TDCi / 2.2L Duratorq-TDCi (110kW / 150PS) - Puma - Fuel Charging and Controls

Description and Operation

High Pressure Fuel Injection Components

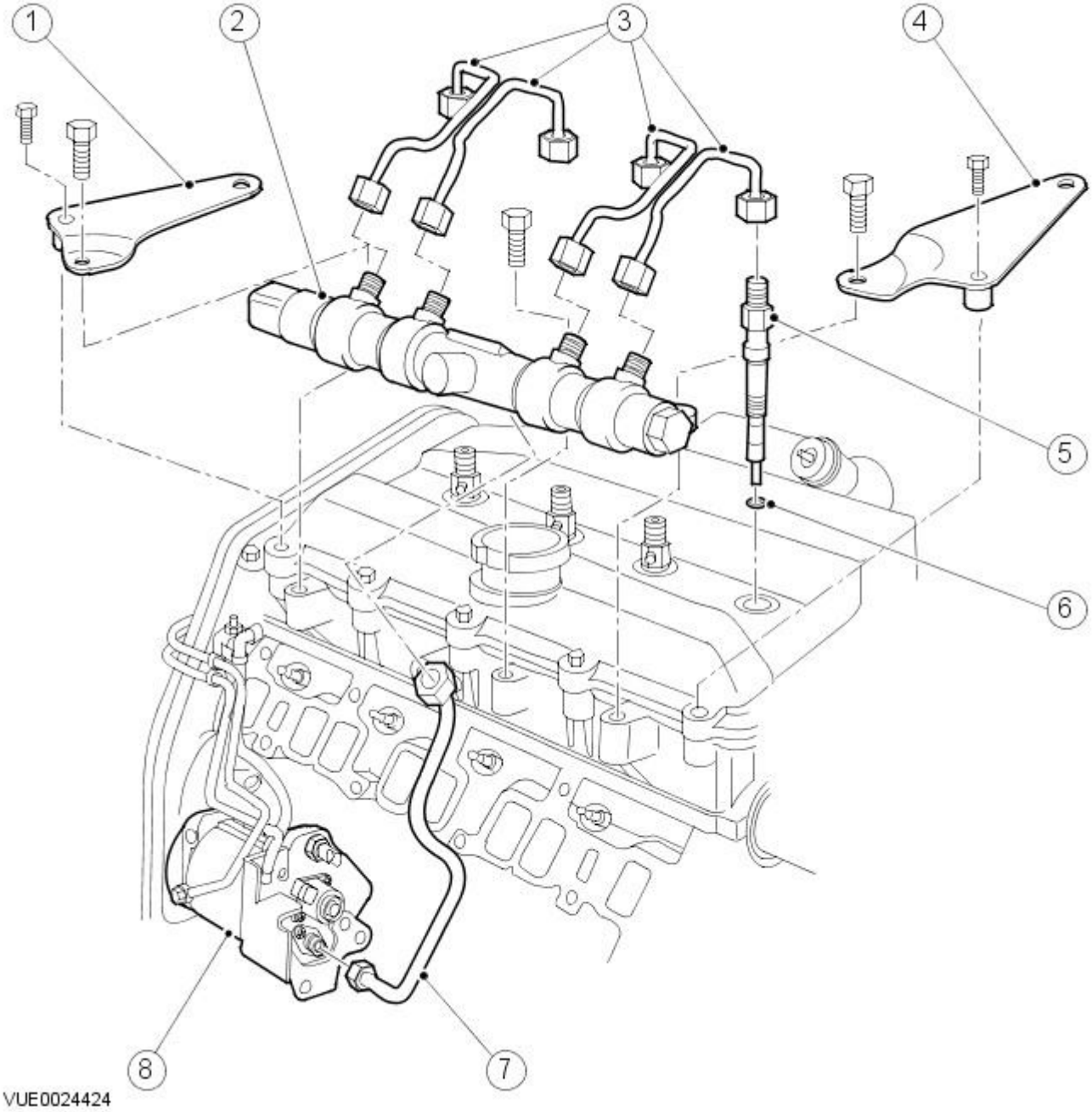

Item	Part Number	Description
1	-	Fuel injection supply manifold support bracket
2	-	Fuel injection supply manifold
3	-	High-pressure fuel supply lines (fuel injection supply manifold to fuel injectors)
4	-	Fuel injection supply manifold support bracket
5	-	Fuel injector
6	-	Fuel injector sealing washer
7	-	High-pressure fuel supply line (fuel pump to fuel injection supply manifold)
8	-	Fuel pump

Fuel Pump

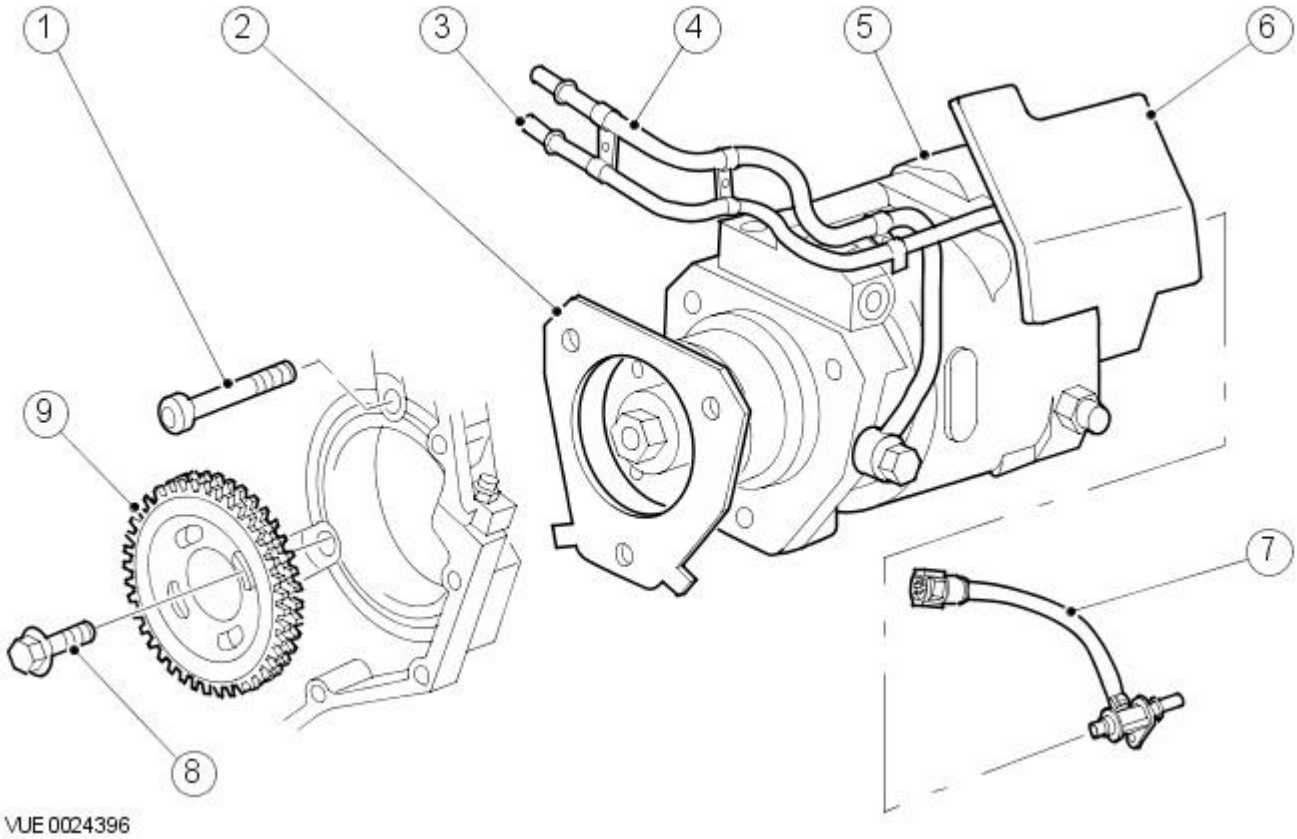

Item	Part Number	Description
1	-	Fuel pump retaining bolt
2	-	Fuel pump gasket
3	-	Fuel pump fuel return line
4	-	Fuel pump fuel supply line
5	-	Fuel pump
6	-	Fuel pump shield
7	-	Fuel return line venturi
8	-	Fuel pump sprocket retaining bolt
9	-	Fuel pump sprocket

Fuel Injectors

The fuel injectors are operated electrically by the engine control module (ECM) and inject a precise amount of fuel into the combustion chamber at the required time.

The injectors have been designed to:

- allow pilot and main injections with short intervals between each injection.
- be fully electrically controlled.

Each injector is calibrated and given its own unique identification number at manufacture. The identification number is a set of letters and numbers located near to the top of the injector.

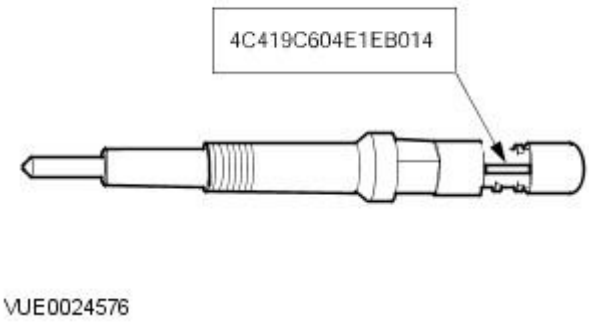

CAUTION: If any of the high pressure fuel pipe retaining nuts are loosened, the high pressure fuel pipe it is installed to must be renewed. Failure to follow this instruction may allow metal fragments to enter the fuel system and result in damage to the fuel system components.

When the injectors are fitted to an engine, the injector identification number and the cylinder number to which it is installed must be programmed into the ECM. This gives the ECM a base calibration for each cylinder of the engine, as the vehicle is run the ECM will adapt from this calibration. If any of the injectors are replaced the ECM will have to be reprogrammed with all of the injector identification numbers and cylinder number to which each is fitted.

Fuel Injection Supply Manifold

The fuel injection supply manifold is a reservoir for the pressurized fuel that is produced by the fuel pump. It also incorporates a pressure sensor so that the ECM can monitor/adjust the pressure of the fuel to be injected into the cylinder. The fuel injection supply manifold and the pressure sensor are serviced as an assembly and must not under any circumstance be disassembled.

Fuel Pump

The fuel pump is located under the intake manifold and is driven by the timing chain at the front of the engine. The fuel pump includes a transfer pump and a high pressure pump which are serviced as one unit.

The transfer pump draws the fuel from the fuel tank and through the fuel filter, it then pumps the fuel to the high pressure pump. The transfer pump maintains a constant pressure of 6 bar (87.02 lb/in²) via a regulating valve within the fuel pump, this is known as transfer pressure.

The high pressure pump receives fuel at transfer pressure from the transfer pump and increases the fuel pressure to between 200 and 1600 bar. The high pressure fuel is then transferred from the high pressure pump to the fuel injection supply manifold.

Fuel Return Line Venturi

The fuel return system incorporates a fuel return line venturi, installed to the back of the fuel pump. The fuel return line venturi is a partial restriction in the fuel return line, which creates a negative pressure in the fuel return system prior to its position in the system. The negative pressure created by the fuel return line venturi helps in the removal and the return to the fuel tank of the fuel leaked off by the fuel injectors.

Fuel Filter

The fuel filter is located at the top of the bulkhead on the right-hand side of the vehicle. The fuel filter incorporates a fuel pre heat function, which utilizes a ball valve operated by a bimetallic strip. When the temperature is less than 15° C (59° F), the ball valve allows the warm fuel in the fuel return system to pass back through the fuel filter to the fuel pump to improve cold running. Once the temperature exceeds 31° C (88° F) a bimetallic strip closes the ball valve in the fuel filter and all of the fuel in the fuel return system is directed back to the fuel tank.

Fuel Charging and Controls - 2.0L Duratorq-TDCi/2.2L Duratorq-TDCi (110kW/150PS) - Puma - Fuel Charging and Controls

Diagnosis and Testing

Principle of operation

This section covers the fuel system from the fuel filter to the fuel injectors, and includes the fuel rail and pump.

For additional information on the description and operation of the system:
REFER to: Fuel Charging and Controls (303-04B Fuel Charging and Controls - 2.0L Duratorq-TDCi/2.2L Duratorq-TDCi (110kW/150PS) - Puma, Description and Operation).

Inspection and verification

WARNING: Make sure that all suitable safety precautions are observed when carrying out any work on the fuel system. failure to observe this warning may result in personal injury:

REFER to: Important Safety Instructions (100-00 General Information, Description and Operation).

CAUTION: Make sure that absolute cleanliness is observed when working with these components. Always install blanking plugs to any open orifices or lines. failure to follow this instruction may result in damage to the vehicle.

1. **1.** Verify the customer concern.
2. **2.** Visually inspect for obvious mechanical or electrical faults.

Mechanical	Electrical
• Fuel level (minimum of four liters for run out of fuel strategy) • Contaminated fuel • Fuel leak(s) • Fuel filter • Air cleaner element • Vacuum line(s)/vacuum connections • Hose(s)/hose connections • Tube(s)/tube connections • Fuel supply line(s) • Fuel return line(s) • High-pressure fuel supply line(s) • Fuel injection supply manifold • Fuel injectors • Fuel pump - Investigate other fuel system components before condemning a pump	• Glow plug indicator • Sensor(s) • Engine control module (ECM) • Fuel metering valve • Fuel temperature sensor • Inertia fuel shutoff (IFS) switch • Fuel injectors • Injector programming • Fuel rail pressure (FRP) sensor • Crankshaft position (CKP) sensor • Camshaft position (CMP) sensor

3. **3.** If an obvious cause for an observed or reported concern is found, correct the cause (if possible) before proceeding to the next step.
4. **4.** Use the approved diagnostic system or a scan tool to retrieve any diagnostic trouble codes (DTCs) before moving onto the symptom chart or DTC index.
   - Make sure that all DTCs are cleared following rectification.

Symptom Chart

Symptom (general)	Symptom (specific)	Possible source	Action
Non-Start	Engine does not crank	• Security system /Immobilizer engaged • Battery condition/charge • Starter relay fault • Starting system fault • Engine control module (ECM) relay fault • **Park/Neutral** switch fault • Engine siezed	Make sure that the immobilizer system is disarmed. Check the battery condition and state of charge. Check that the engine turns by hand. Check the starting system and circuits. Refer to the electrical guides. Check for DTCs indicating an ECM relay or park/neutral switch fault. Rectify as necessary.
	Engine cranks, but does not start	• Security system /Immobilizer engaged • Low/Contaminated fuel • Air ingress • Blocked air cleaner • Blocked fuel filter • Low-pressure circuit fault • Fuel metering valve blocked/contaminated • Injector(s) fault/programming • Intake air temperature (IAT) sensor fault • Glow plug(s)/circuit fault • Fuel pressure sensor fault • Camshaft position (CMP) sensor fault	Make sure that the immobilizer system is disarmed. Check the fuel level and condition. Draw off approximately 1 ltr (2.11 pints) of fuel and allow to stand for 1 minute. Check to make sure there is no separation of the fuel indicating water or other liquid in the fuel. Check the low-pressure fuel system for leaks/damage, check for air ingress. Check the air cleaner element. Check that fuel flows through the fuel filter. Check for DTCs indicating a fuel metering valve or injector fault. Check for DTCs indicating an engine management sensor fault. Check the valve train, check the compressions, REFER to: Engine (303-00 Engine System - General Information, Diagnosis and Testing). Check the catalytic converter condition, etc. Check for diesel particulate filter DTCs. Refer to the warranty policy and procedures manual if an ECM is suspect.

Symptom (general)	Symptom (specific)	Possible source	Action
		• Crankshaft position (CKP) sensor fault • Cylinder head temperature (CHT) sensor fault • Fuel pump fault • Low compression • Valve train fault • Blocked catalyst • Engine control module (ECM) fault	
Difficult to start	Difficult to start cold	• Glow plug(s)/circuit fault • Contaminated fuel • Air ingress • Blocked air cleaner • Blocked fuel filter • Low-pressure circuit fault • Fuel metering valve blocked/contaminated • Fuel pressure sensor fault • Intake air temperature (IAT) sensor fault • Cylinder head temperature (CHT) sensor fault • Camshaft position (CMP) sensor fault • Crankshaft position (CKP) sensor fault • Injector(s) fault/programming • Pump fault • Blocked catalyst • Valve train fault • Low compression	Check the glow plugs and circuits. Refer to the electrical guides. Check the fuel level and condition. Draw off approximately 1 ltr (2.11 pints) of fuel and allow to stand for 1 minute. Check to make sure there is no separation of the fuel indicating water or other liquid in the fuel. Check the low-pressure fuel system for leaks/damage, check for air ingress. Check the air cleaner element. Check that fuel flows through the fuel filter. Check for DTCs indicating a fuel metering valve or injector fault. Check for DTCs indicating an engine management sensor fault. Check the valve train, check the compressions, REFER to: Engine (303-00 Engine System - General Information, Diagnosis and Testing). Check the catalytic converter condition, etc. Check for diesel particulate filter DTCs.
	Difficult to start hot	• Contaminated fuel • Air ingress • Blocked air cleaner • Blocked fuel filter • Low-pressure circuit fault • Fuel metering valve blocked/contaminated • Exhaust gas recirculation (EGR) valve fault • Fuel pressure sensor fault • Intake air temperature (IAT) sensor fault • Camshaft position (CMP) sensor fault • Crankshaft position (CKP) sensor fault • Injector(s) fault/programming • Pump fault • Blocked catalyst • Valve train fault • Low compression	Check the fuel level and condition. Draw off approximately 1 ltr (2.11 pints) of fuel and allow to stand for 1 minute. Check to make sure there is no separation of the fuel indicating water or other liquid in the fuel. Check the low-pressure fuel system for leaks/damage, check for air ingress. Check the air cleaner element. Check that fuel flows through the fuel filter. Check for DTCs indicating a fuel metering valve or injector fault. Check for DTCs indicating an engine management sensor fault. Check the valve train, check the compressions, REFER to: Engine (303-00 Engine System - General Information, Diagnosis and Testing). Check the catalytic converter condition, etc. Check for diesel particulate filter DTCs.
	Engine cranks too fast/slow	• Battery condition/charge • Starting system fault • Low compression	Check the battery condition and state of charge. Check the starting system circuits. Refer to the electrical guides. Rectify as necessary. Check the compressions, REFER to: Engine (303-00 Engine System - General Information, Diagnosis and Testing).
Driveability	Rough idle	• Low/Contaminated fuel • Air ingress • Injector(s) fault/programming • Fuel metering valve blocked/contaminated • Exhaust gas recirculation (EGR) valve fault • Blocked air cleaner • Blocked fuel filter • Pump fault • Crankshaft position (CKP) sensor fault • Intake air temperature (IAT) sensor fault • Manifold absolute pressure (MAP) sensor fault • Knock sensor (KS) fault	Check the fuel level and condition. Draw off approximately 1 ltr (2.11 pints) of fuel and allow to stand for 1 minute. Check to make sure there is no separation of the fuel indicating water or other liquid in the fuel. Check the low-pressure fuel system for leaks/damage, check for air ingress. Check for DTCs indicating an injector programming or EGR fault. Check the air cleaner element. Check that fuel flows through the fuel filter. Check for DTCs indicating a fuel metering valve fault. Check for DTCs indicating an engine management sensor fault. Check the dual-mass flywheel.

Symptom (general)	Symptom (specific)	Possible source	Action
		• Dual-mass flywheel fault	
	Idle speed high or low	• Accelerator pedal position (APP) sensor fault • Intake air temperature (IAT) sensor fault	Check for DTCs indicating an APP or IAT sensor fault. Rectify as necessary.
	Engine speed out of control	• Engine oil level too high • Excessive blow-by • Accelerator pedal position (APP) sensor fault • Turbocharger bearing/seal failure	Check/correct the engine oil level. Check the engine condition. Check for DTCs indicating an APP sensor fault. Rectify as necessary. Check the turbocharger bearing/seal condition by assessing the movement in the turbocharger shaft and the amount of oil in the turbocharger body. Note that a small amount of oil is normal.
	Lack of power when accelerating	• Contaminated fuel • Air intake circuit fault • Low fuel pressure • Exhaust gas recirculation (EGR) valve fault • Fuel filter blocked • Fuel lines kinked/restricted • Pump fault • Injector(s) fault/programming • Vehicle speed sensor fault • Cylinder head temperature (CHT) sensor fault • Intake air temperature (IAT) sensor fault • Manifold absolute pressure (MAP) sensor fault • Accelerator pedal position (APP) sensor fault • Fuel rail temperature (FRT) sensor fault • Fuel rail pressure (FRP) sensor fault • Fuel metering valve fault • Turbocharger fault • Catalyst blocked • Valve timing fault • Low compression	Check the fuel level and condition. Draw off approximately 1 ltr (2.11 pints) of fuel and allow to stand for 1 minute. Check to make sure there is no separation of the fuel indicating water or other liquid in the fuel. Check the air intake system and low-pressure fuel circuit. Rectify as necessary. Check for DTCs indicating an EGR fault. Check for DTCs indicating an engine management sensor or injector programming fault. Check the turbocharger condition and operation. Check the catalytic converter condition. Rectify as necessary. For valve timing and compression information, REFER to: Engine (303-00 Engine System - General Information, Diagnosis and Testing).
	Engine stops/stalls	• Low/Contaminated fuel • Air cleaner element blocked • Fuel metering valve blocked/contaminated • Pump fault • High-pressure leak • Low-pressure circuit fault (air ingress) • Relay fault • Crankshaft position (CKP) sensor fault • Camshaft position (CMP) sensor fault • Cylinder head temperature (CHT) sensor fault • Fuel rail pressure (FRP) sensor fault • Dual-mass flywheel fault • Engine control module (ECM) fault	Check the fuel level and condition. Draw off approximately 1 ltr (2.11 pints) of fuel and allow to stand for 1 minute. Check to make sure there is no separation of the fuel indicating water or other liquid in the fuel. Check the air intake system and low-pressure fuel circuit. Rectify as necessary. Check for DTCs indicating a relay, engine management sensor or ECM fault. Check the dual-mass flywheel. Refer to the warranty policy and procedures manual if an ECM is suspect.
	Engine judders	• Low/Contaminated fuel • Fuel metering valve blocked/contaminated • High-pressure leak • Air intake circuit fault • Low-pressure circuit fault (air ingress) • Pump fault • Exhaust gas recirculation (EGR) valve fault • Accelerator pedal position (APP) sensor fault	Check the fuel level and condition. Draw off approximately 1 ltr (2.11 pints) of fuel and allow to stand for 1 minute. Check to make sure there is no separation of the fuel indicating water or other liquid in the fuel. Check the air intake system and low-pressure fuel circuit. Rectify as necessary. Check for DTCs indicating an engine management sensor or injector programming fault. Check the catalytic converter and turbocharger condition. Rectify as necessary. Check the dual-mass flywheel. For cylinder head, compression and camshaft information, REFER to: Engine (303-00 Engine System - General Information, Diagnosis and Testing).

Symptom (general)	Symptom (specific)	Possible source	Action
		• Cylinder head temperature (CHT) sensor fault • Camshaft position (CMP) sensor fault • Crankshaft position (CKP) sensor fault • Intake air temperature (IAT) sensor fault • Manifold absolute pressure (MAP) sensor fault • Knock sensor (KS) fault • Fuel rail pressure (FRP) sensor fault • Injector(s) fault/programming • Catalyst blocked • Turbocharger fault • Dual-mass flywheel fault • Cylinder head gasket fault • Camshafts/Valve clearances • Low compression	
	Engine will not stop	• Engine oil level too high • Turbocharger fault • Engine control module (ECM) fault	Check/correct the engine oil level. Check the turbocharger condition and operation. Check for DTCs indicating an ECM fault. Refer to the warranty policy and procedures manual if an ECM is suspect.
General	Excessive fuel consumption	• Incorrect engine oil • Air intake circuit fault • Low-pressure circuit fault (air ingress/leaks) • Fuel metering valve/circuit • High-pressure leak • Exhaust gas recirculation (EGR) valve fault • Injector(s) fault/programming • Cylinder head temperature (CHT) sensor fault • Intake air temperature (IAT) sensor fault • Manifold absolute pressure (MAP) sensor fault • Turbocharger fault • Dual-mass flywheel fault • Valve timing fault • Low compression	Make sure that the correct grade of oil is used in the engine. Check the air intake and low-pressure circuits. Check for DTCs indicating an EGR, injector programming or engine management sensor fault. Check the turbocharger condition and operation. Check the dual-mass flywheel. For valve timing and compression information, REFER to: Engine (303-00 Engine System - General Information, Diagnosis and Testing).
	Excessive black smoke	• Air intake circuit fault • Exhaust gas recirculation (EGR) valve fault • Injector(s) fault/programming • Accelerator pedal position (APP) sensor fault • Crankshaft position (CKP) sensor fault • Knock sensor (KS) fault • Fuel rail pressure (FRP) sensor fault • Turbocharger bearings/seals fault • Valve timing fault	Check the air intake circuit. Check for DTCs indicating an EGR, injector programming or engine management sensor fault. Check the turbocharger bearing/seal condition by assessing the movement in the turbocharger shaft and the amount of oil in the turbocharger body. Note that a small amount of oil is normal. For valve timing information, REFER to: Engine (303-00 Engine System - General Information, Diagnosis and Testing).

For a complete list of all diagnostic trouble codes that could be logged on this vehicle.
REFER to: Electronic Engine Controls (303-14B Electronic Engine Controls - 2.0L Duratorq-TDCi/2.2L Duratorq-TDCi (110kW/150PS) - Puma, Diagnosis and Testing).

Published: 11-May-2011

Fuel Charging and Controls - 2.0L Duratorq-TDCi / 2.2L Duratorq-TDCi (110kW / 150PS) - Puma - Fuel Injection Component Cleaning

General Procedures

General Equipment

Pneumatic vacuum gun

Materials

Name	Specification
Cleaning Fluid	W-M5B411-A

• WARNINGS:

Do not smoke or carry lighted tobacco or open flame of any type when working on or near any fuel related components. Highly flammable mixtures are always present and may ignite. Failure to follow these instructions may result in personal injury.

Do not carry out any repairs to the fuel injection system with the engine running. The fuel pressure within the system can be as high as 1600 bar. Failure to follow this instruction may result in personal injury.

Eye protection must be worn at all times when working on or near any fuel related components. Failure to follow this instruction may result in personal injury.

• CAUTIONS:

Make sure that the workshop area in which the vehicle is being worked on is as clean and dust-free as possible. Areas in which work on clutches, brakes or where welding or machining are carried out are not suitable in view of the risk of contamination to the fuel system.

Make sure that clean non-plated tools are used. Clean tools using a new brush that will not lose its bristles and fresh cleaning fluid, prior to starting work on the vehicle.

Use a steel topped workbench and cover it with clean, lint-free non-flocking material.

Make sure that all parts removed from the vehicle are placed on the lint-free non-flocking material.

Make sure that any protective clothing worn is clean and made from lint-free non-flocking material.

Make sure that any protective gloves worn are new and are of the non-powdered latex type.

Before using the cleaning fluid, protect all electrical components and connectors with lint-free non-flocking material.

1. Using a new brush that will not lose its bristles, brush cleaning fluid onto the components being removed and onto the surrounding area.
2. Using a pneumatic vacuum gun, remove all traces of cleaning fluid and foreign material.
3. Dispose of any used cleaning fluid and the brush after completing the repair.

Fuel Charging and Controls - 2.0L Duratorq-TDCi / 2.2L Duratorq-TDCi (110kW / 150PS) - Puma - Fuel Injection Pump

Removal and Installation

Special Tool(s)	
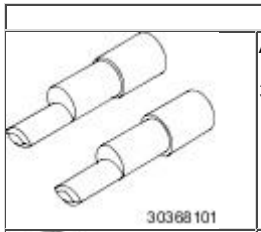	Adapter for 303-681-01 303-681-01
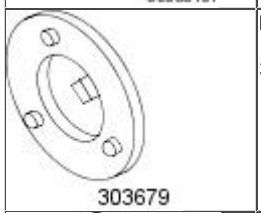	Remover/Installer, Crankshaft Oil Seal 303-679
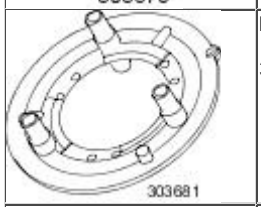	Locking Tool, Fuel Injection Pump Sprocket 303-681
	Locking Tool, Fuel Injection Pump Sprocket 303-1151
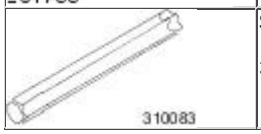	Socket, Fuel Injection Pump 303-083A (23-057)

Removal

• NOTE: **If the fuel injection pump is being renewed in conjunction with the fuel injectors and high-pressure fuel lines, SRO 195010 must be claimed.**

All vehicles

• WARNINGS:

Wait at least 15 minutes after the engine stops before commencing any repair to the high pressure fuel injection system. Failure to follow this instruction may result in personal injury.

Do not smoke or carry lighted tobacco or open flame of any type when working on or near any fuel related components. Highly flammable mixtures are always present and may ignite. Failure to follow these instructions may result in personal injury.

This procedure involves fuel handling. Be prepared for fuel spillage at all times and always observe fuel handling precautions. Failure to follow these instructions may result in personal injury.

Do not carry out any repairs to the fuel injection system with the engine running. The fuel pressure within the system can be as high as 1600 bar (23,206 lb/in²). Failure to follow this instruction may result in personal injury.

• CAUTIONS:

Make sure the workshop area in which the vehicle is being worked on is as clean and as dust free as possible. Foreign matter from work on clutches, brakes or from machining or welding operations can contaminate the fuel system and may result in later malfunction.

Always carry out the cleaning process before carrying out any repairs to the fuel injection system components. Failure to follow this instruction may result in foreign matter ingress to the fuel injection system.

Diesel fuel injection equipment is manufactured to very precise tolerances and fine clearances. It is therefore essential that absolute cleanliness is observed when working with these components. Always install blanking plugs to any open orifices or lines.

Do not disassemble or clean inside the fuel injection pump, even with an ultrasonic cleaner. Always install a new fuel injection pump when required.

• NOTE: If the fuel injection pump has suffered a major mechanical failure, new fuel injectors should also be installed.

1. Remove the exhaust gas recirculation (EGR) cooler to EGR valve tube. For additional information, refer to: Exhaust Gas Recirculation (EGR) Cooler to EGR Valve Tube (303-08 Engine Emission Control - 2.0L Diesel/2.2L Diesel, Removal and Installation).
2. Detach the wiring harness.

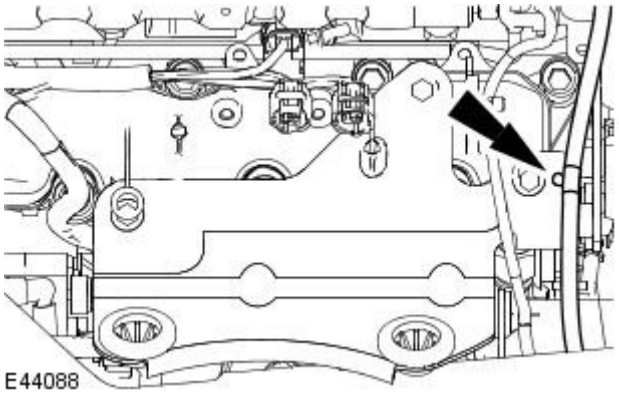

3. Remove the air cleaner mount bracket.

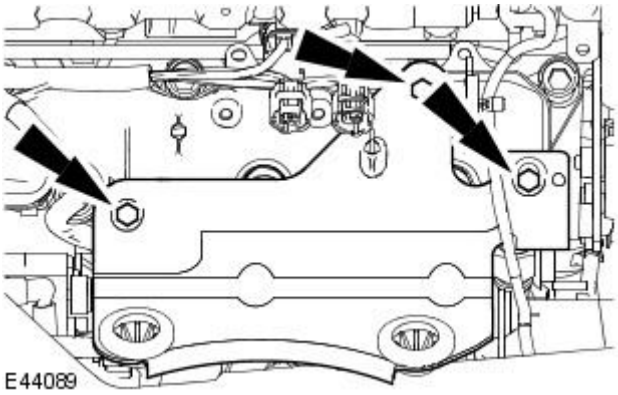

4. Detach the EGR valve from the intake manifold.
   - Discard the EGR valve gasket.

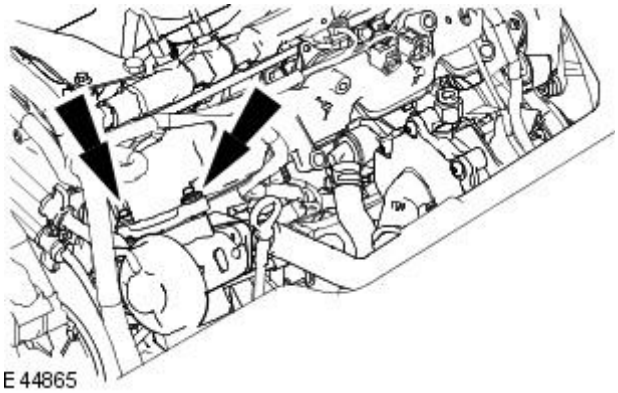

5. Detach the wiring harness from the intake manifold.

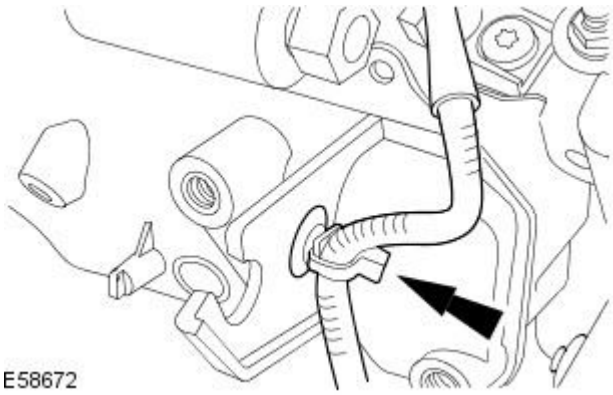

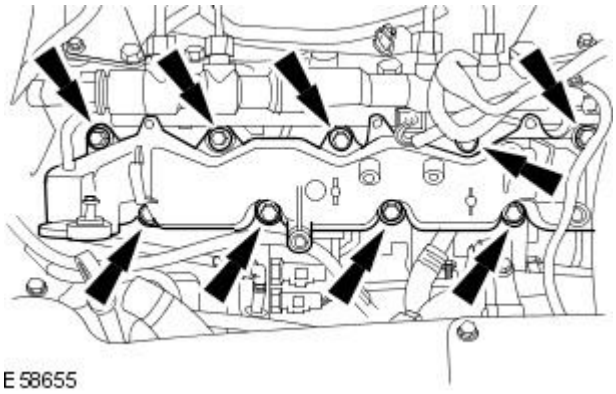

6. Remove the intake manifold.

- Discard the intake manifold gaskets.

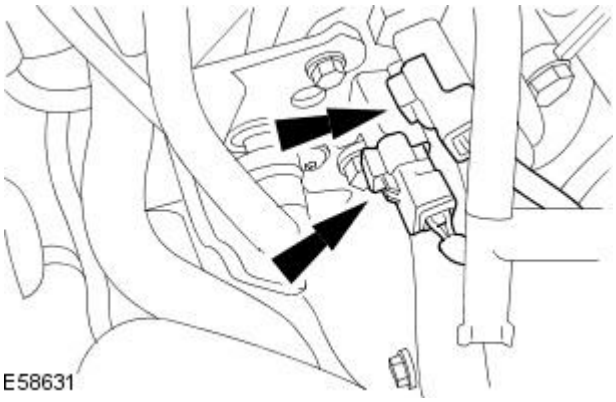

7. Disconnect the fuel metering valve and fuel temperature sensor electrical connectors.

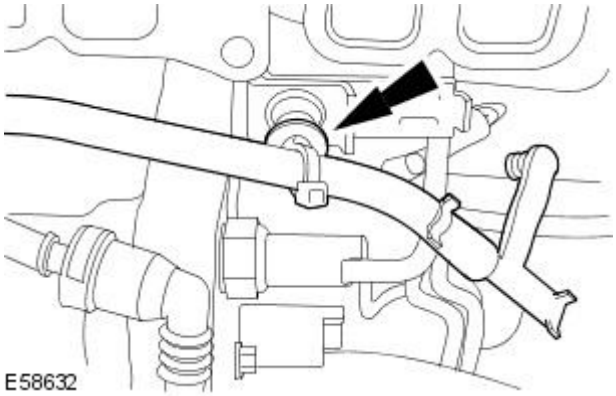

8. Detach the wiring harness.

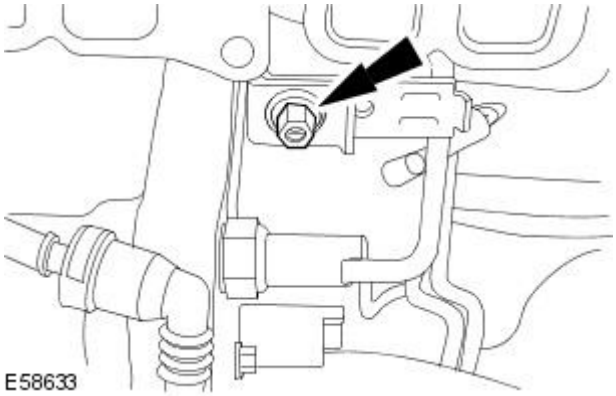

9. Detach the high-pressure fuel supply line support bracket.

10. Clean the fuel injection pump, high-pressure fuel supply line and surrounding areas.
For additional information, refer to: Fuel Injection Component Cleaning (303-04B Fuel Charging and Controls - 2.0L Duratorq-TDCi/2.2L Duratorq-TDCi (110kW/150PS) - Puma, General Procedures).

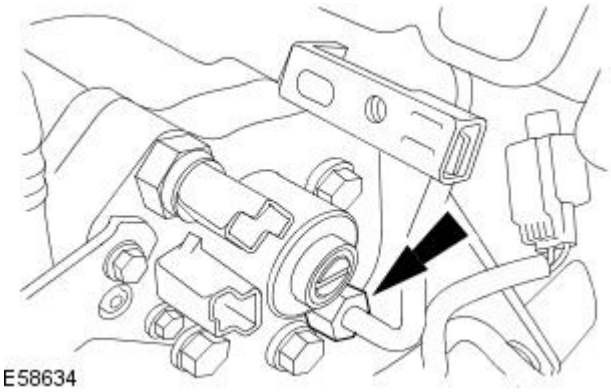

11. CAUTIONS:

Make sure the tool used to loosen the high pressure fuel supply line union is used at the top of the union as this is where there is most material. Failure to follow this instruction may result in damage to the union.

Maintain pressure on the high pressure fuel supply line to keep the olive in contact with the fuel injection pump cone while unscrewing the union. Failure to follow this instruction may result in foreign matter ingress to the fuel injection system.

Loosen the high-pressure fuel supply line at the fuel injection pump.

12. CAUTION: Make sure that the high pressure fuel supply line remains in contact with both the fuel injection pump and the fuel injection supply manifold until both unions have been detached and cleaned. Failure to follow this instruction may result in foreign matter ingress to the fuel injection system.

Using the pneumatic vacuum gun, vacuum foreign material from the high-pressure fuel supply line and the fuel injection pump.

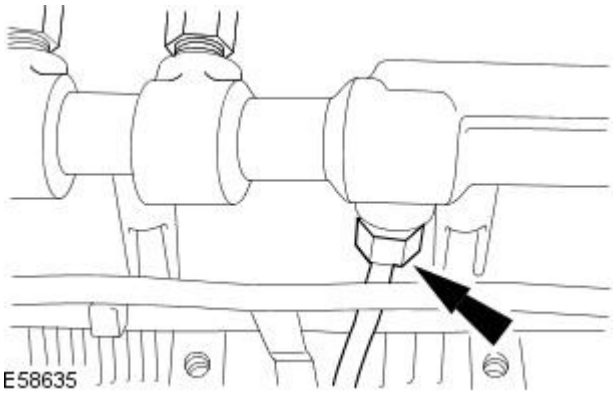

13. CAUTIONS:

Make sure the tool used to loosen the high pressure fuel supply line union is used at the top of the union as this is where there is most material. Failure to follow this instruction may result in damage to the union.

Maintain pressure on the high pressure fuel supply line to keep the olive in contact with the fuel injection supply manifold cone while unscrewing the union. Failure to follow this instruction may result in foreign matter ingress to the fuel injection system.

While maintaining the pressure on the high pressure fuel supply line, clean and vacuum foreign material from the line and union.

Loosen the high-pressure fuel supply line at the fuel injection supply manifold.

14. CAUTION: Make sure that the high pressure fuel supply line remains in contact with both the fuel injection pump and the fuel injection supply manifold until both unions have been detached and cleaned. Failure to follow this instruction may result in foreign matter ingress to the fuel injection system.

Using the pneumatic vacuum gun, vacuum foreign material from the high pressure fuel supply line and the fuel injection supply manifold.

15. Remove and discard the high-pressure fuel supply line.

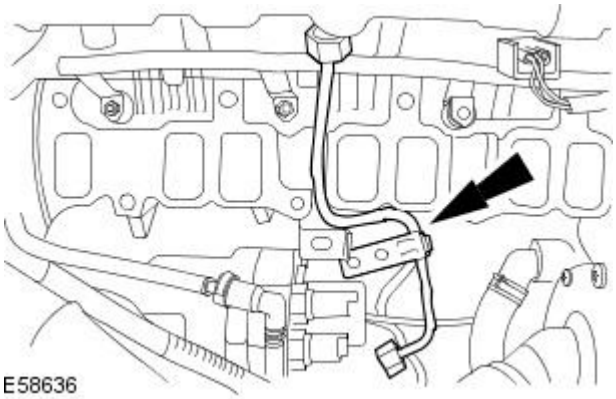

16. Using the pneumatic vacuum gun, vacuum foreign material from the fuel injection pump and the fuel injection supply manifold.

17. Install blanking caps to the open threaded ports on the fuel injection pump and the fuel injection supply manifold.

Vehicles built up to VIN:E43868

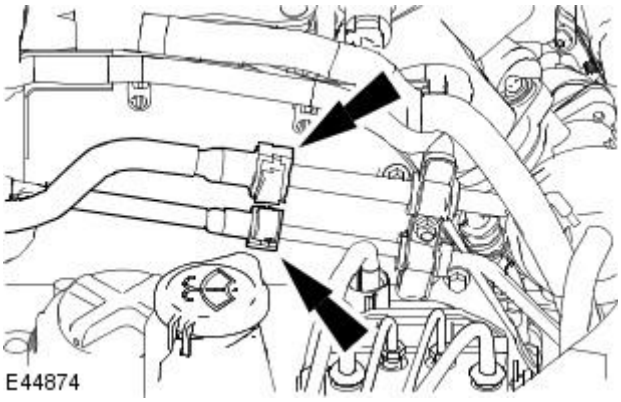

18. Disconnect the fuel injection pump fuel supply and return lines. For additional information, refer to: Quick Release Coupling - Push Connect (310-00 Fuel System - General Information, General Procedures).

- Install blanking plugs to the fuel injection pump fuel supply and return line male and female connectors.

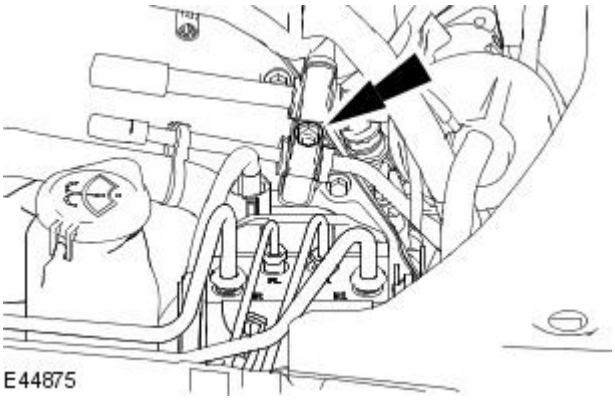

19. Loosen the fuel supply and return line support bracket retaining nut.

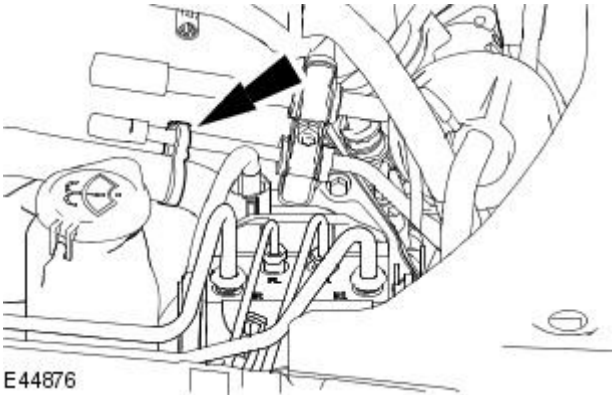

20. Detach the power steering fluid hose from the fuel return line.

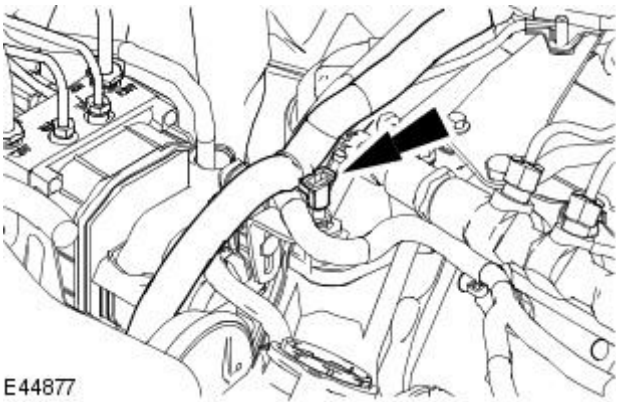

21. Detach the wiring harness retaining clip.

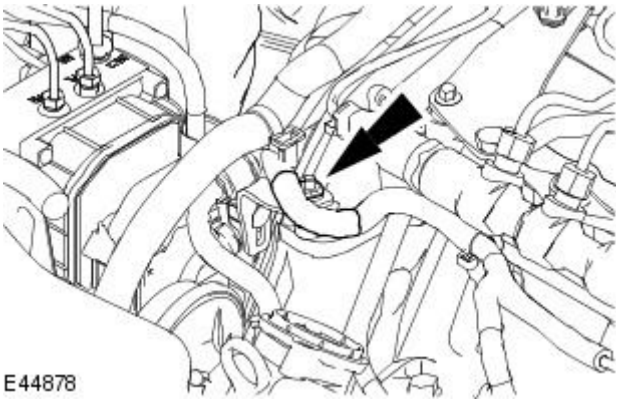

22. Detach the wiring harness retaining clip.

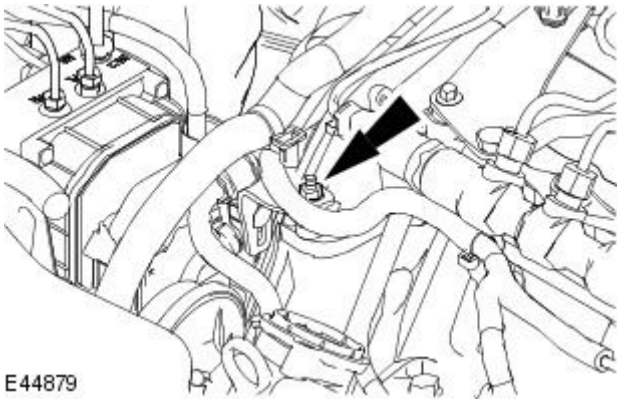

23. Detach the fuel supply and fuel return line support bracket.

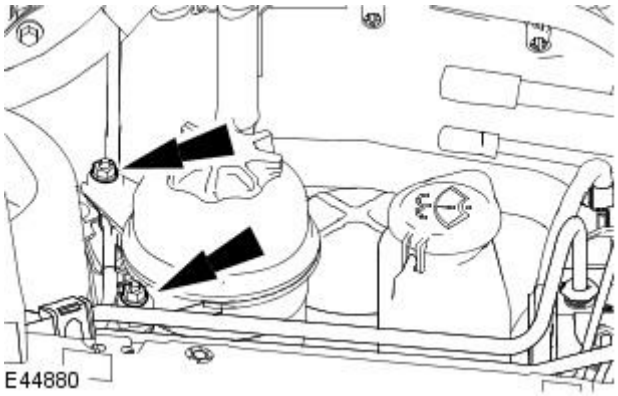

24. Remove the power steering fluid reservoir retaining nuts.

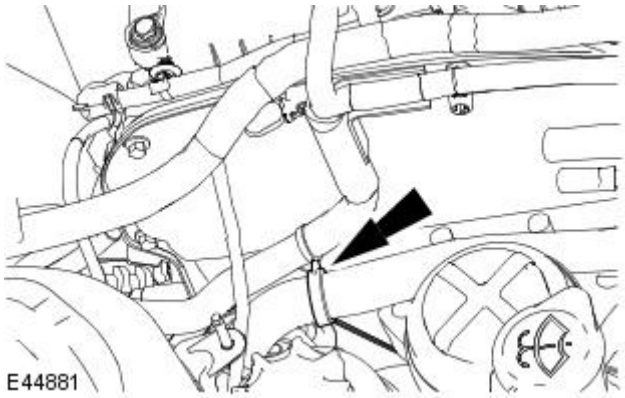

25. Detach the power steering fluid reservoir.

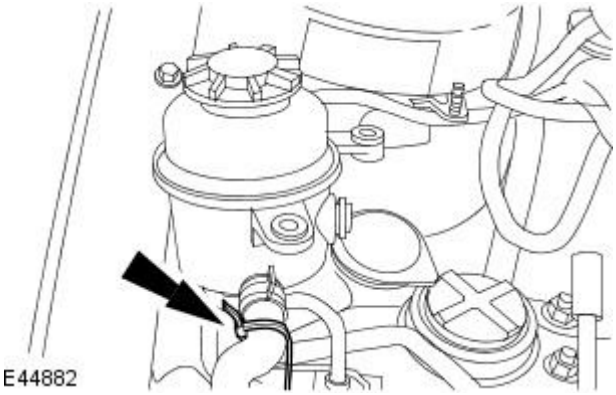

26. Secure the power steering fluid reservoir to one side.

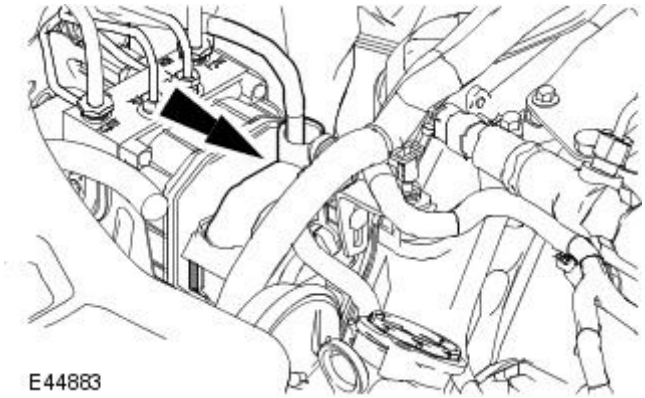

27. Disconnect the hydraulic control unit electrical (HCU) connector.

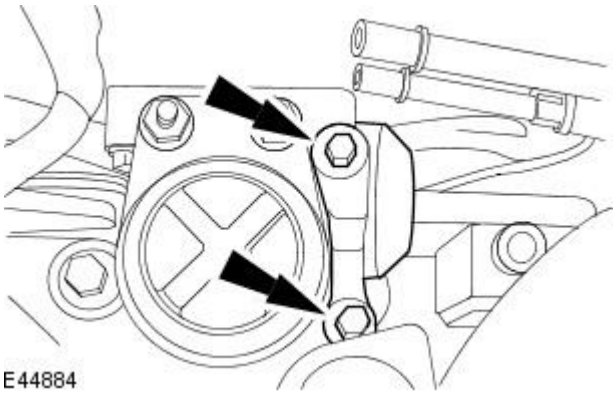

28. Remove the engine mount damper.

Vehicles built from VIN:E43869

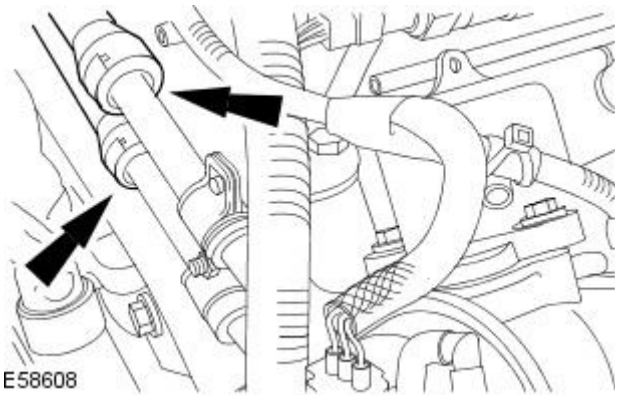

29. Disconnect the fuel injection pump fuel supply and return lines. For additional information, refer to: Quick Release Coupling - Push Connect (310-00 Fuel System - General Information, General Procedures).

- Install blanking plugs to the fuel injection pump fuel supply and return line male and female connectors.

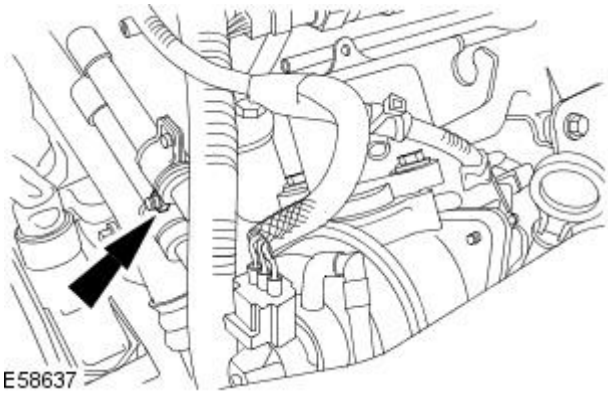

30. Remove the fuel supply and return line support bracket retaining nut.

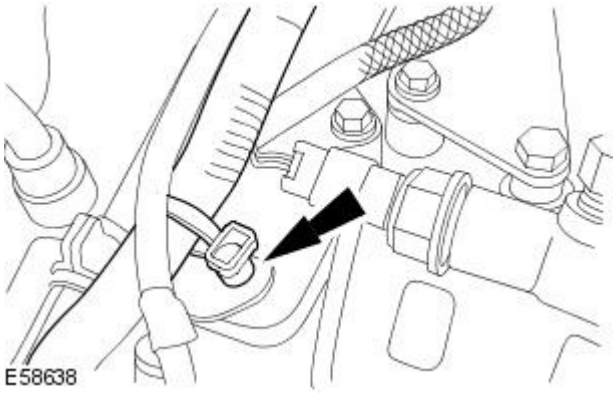

31. Detach the wiring harness retaining clip.

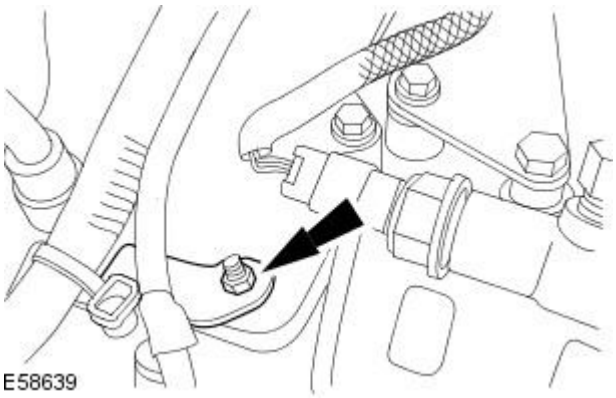

32. Remove the fuel supply and return line support bracket retaining nut.

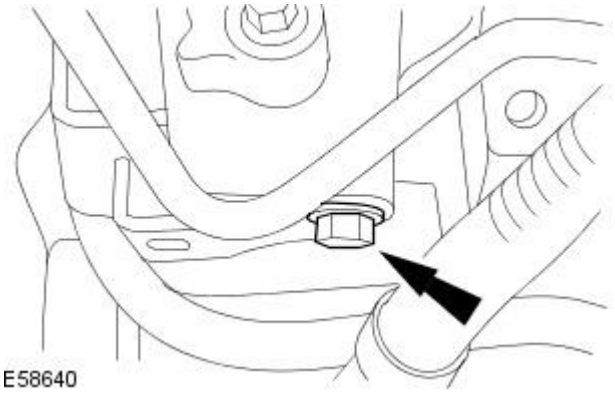

33. Detach the fuel supply and return lines.

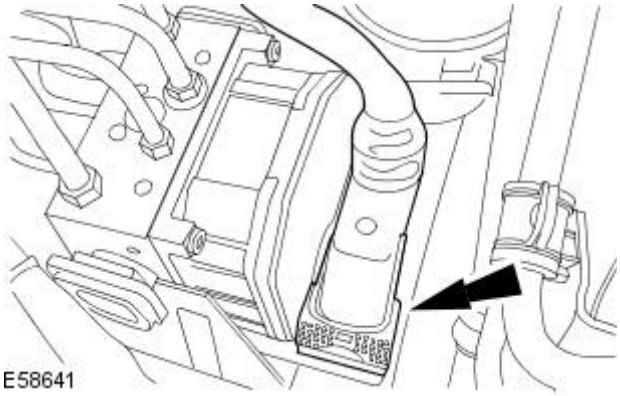

34. Disconnect the HCU electrical connector.

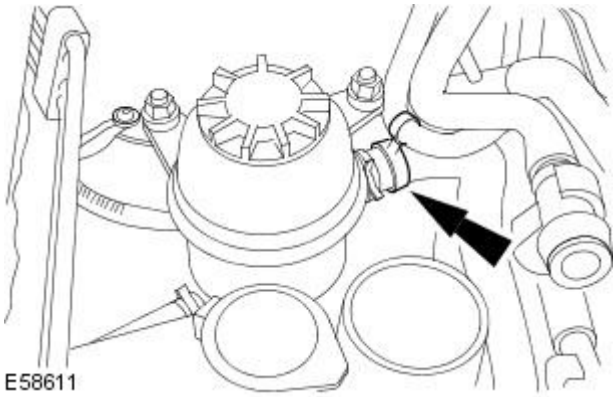

35. Detach the power steering pipe to engine wiring harness retaining clip.

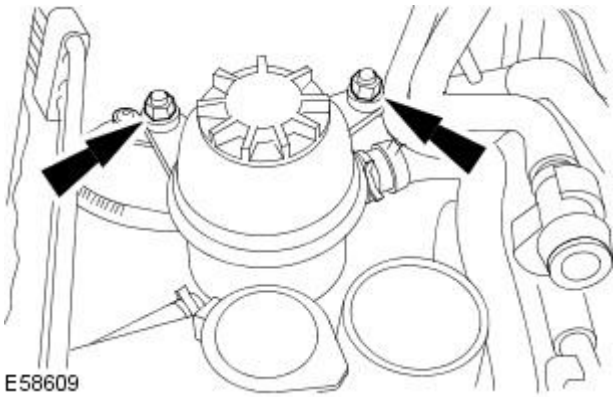

36. Remove the power steering fluid reservoir retaining nuts.

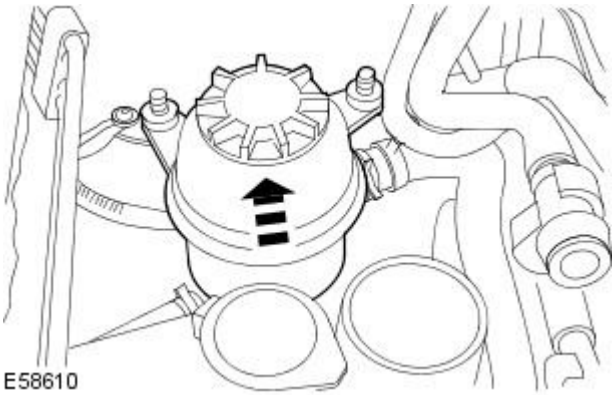

37. Detach the power steering fluid reservoir.

All vehicles

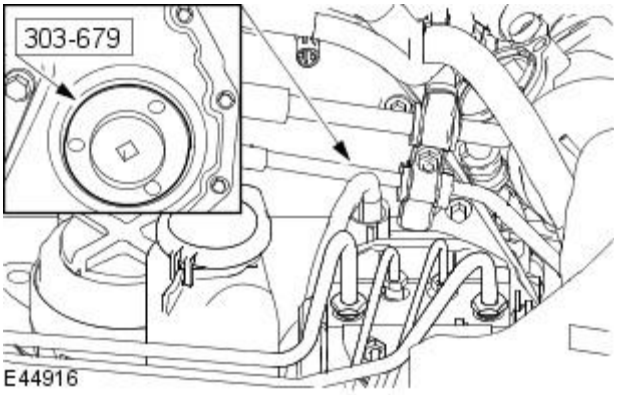

38. Using the special tool, remove the fuel injection pump sprocket access cover.

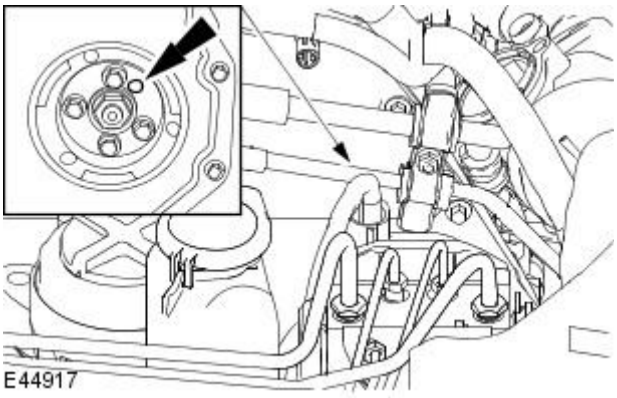

39. NOTE: Turn the engine in the normal direction of rotation only.

Turn the engine until the fuel injection pump sprocket timing hole is at the 1 o'clock position.

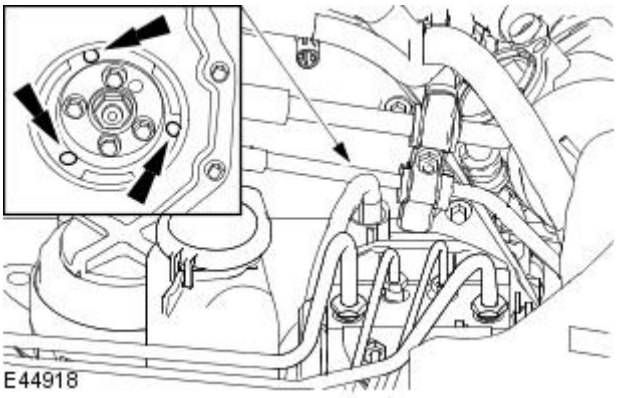

40. NOTE: The fuel injection pump retaining bolts remain captive behind the fuel injection pump sprocket after removal.

• NOTE: Use a torx 45 drive socket with a minimum shaft length of 43 mm (1.69 in).

Remove the fuel injection pump retaining bolts.

- If available use special tool 303-083A.

41. From 2006 MY special tool numbers 303-681 and 303-681-01 have now been superseded by special tool numbers 303-1151 and 303-083A.

- To carry out the procedure using special tool numbers 303-681 and 303-681-01 see steps 43 - 46.
- To carry out the procedure using special tool numbers 303-1151 and 303-083A see steps 47 - 49.

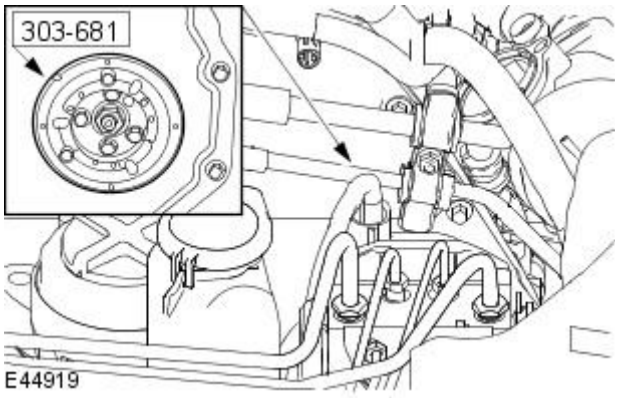

42. NOTE: For additional information, see step 41.

• NOTE: The special tool locking pin holes are offset. During installation of the special tool, check that the offset pin hole is located at the top.

Install the special tool.

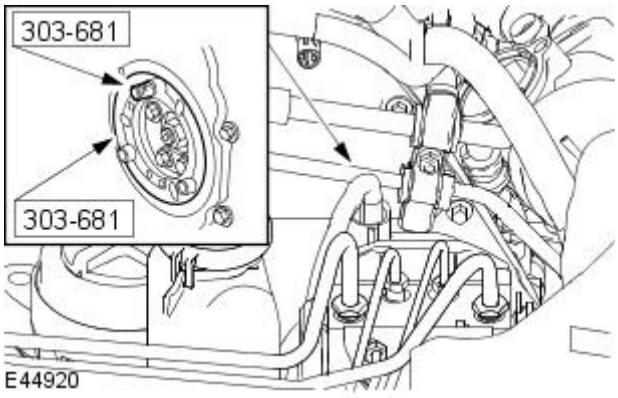

43. NOTE: For additional information, see step 41.

Using the special tools, lock the fuel injection pump sprocket.

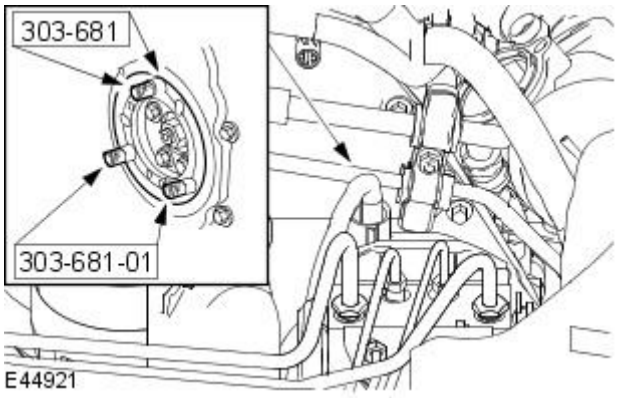

44. NOTE: For additional information, see step 41.

Install the special tools.

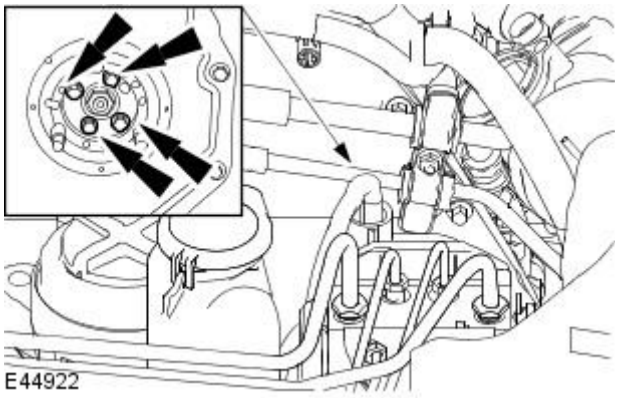

45. NOTE: For additional information, see step 41.

Remove the fuel injection pump sprocket retaining bolts.

46. NOTE: For additional information, see step 41.

• NOTE:

Using the special tool, support the fuel injection pump sprocket.

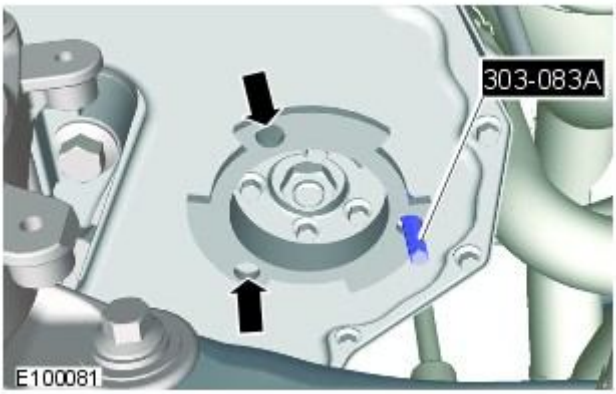

47. NOTE: For additional information, see step 41.

• NOTE: Access the fuel injection pump retaining bolts through the holes provided in the special tool (Tool no. 303-1151 and tool no. 303-083A) and the fuel injection pump sprocket. The fuel injection pump retaining bolts cannot be completely removed.

Using the special tool, remove the fuel injection pump retaining bolts.

- If available use special tool 303-083A.

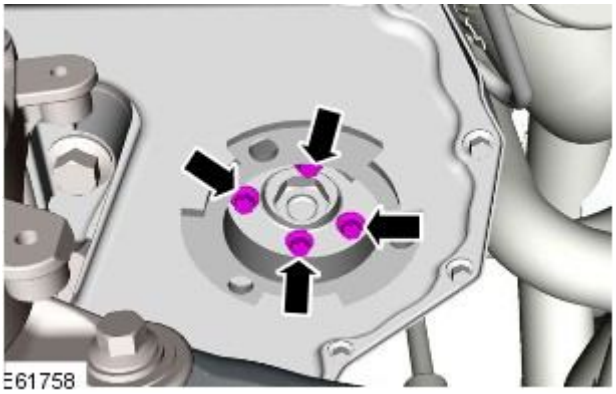

48. NOTE: For additional information, see step 41.

Remove the fuel injection pump sprocket retaining bolts.

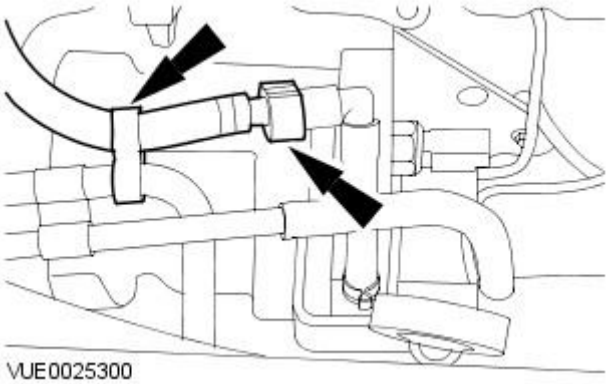

49. Disconnect the fuel injector to fuel injection pump fuel return line.

- Detach the fuel injector to fuel injection pump return line retaining clip (if equipped).
- Install blanking plugs to the fuel injector to fuel injection pump fuel return line male and female connectors.

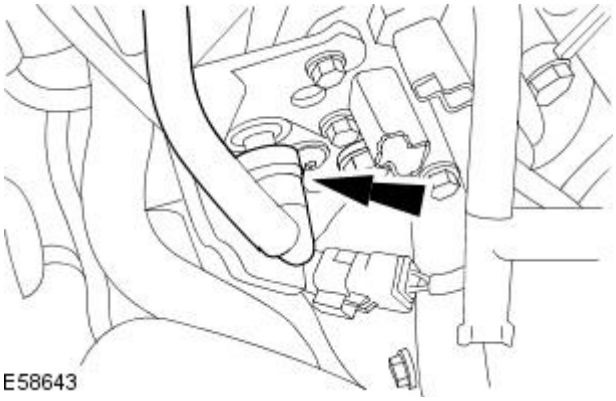

50. Disconnect the fuel pipe.

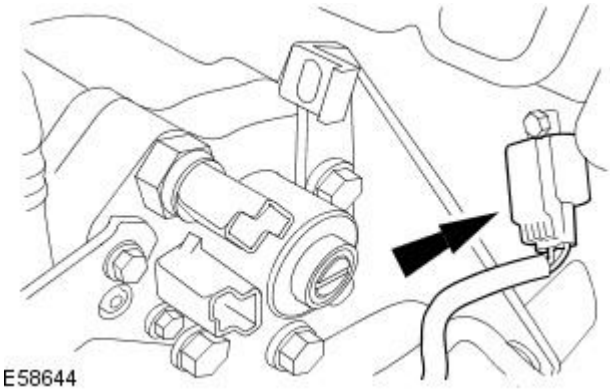

51. Disconnect the knock sensor (KS) electrical connector.

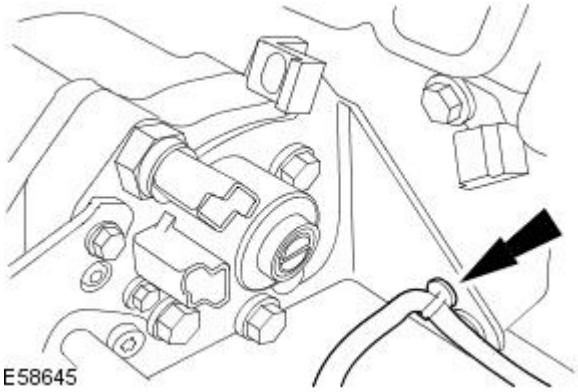

52. Detach the engine wiring harness.

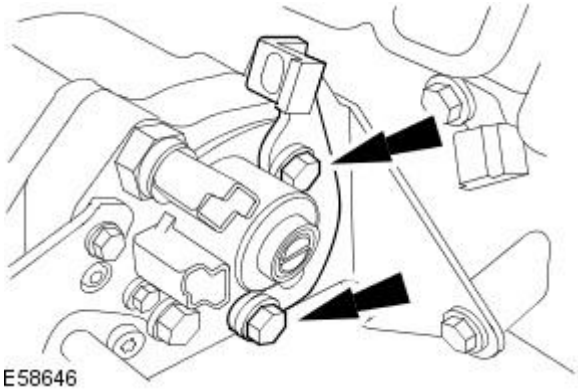

53. Remove the fuel injection pump support bracket.

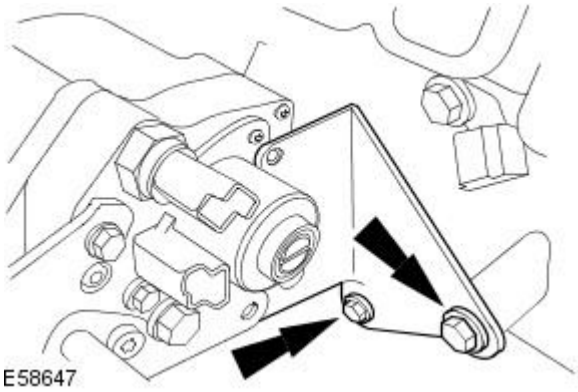

54. Remove the fuel injection pump support bracket to engine cylinder block retaining bolts.

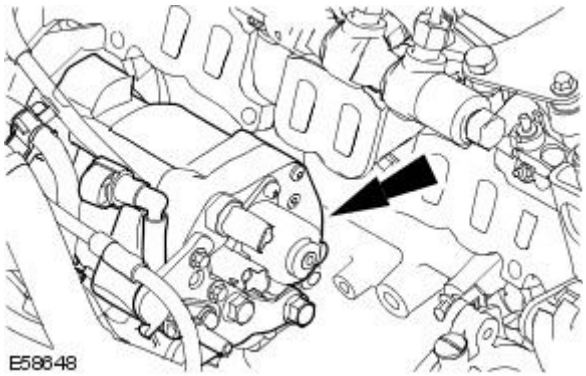

55. NOTE: When removing the fuel injection pump the special tool locking pins must not be removed. Failure to follow this instruction will require the engine front cover to be removed to retrieve the fuel injection pump sprocket and the valve timing to be reset.

Remove the fuel injection pump.

- Discard the fuel injection pump gasket.

56. Remove the fuel injection pump shield from the fuel injection pump.

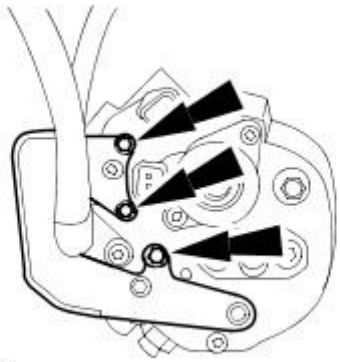

VUE0025306

57. Detach the fuel return line venturi from the fuel injection pump.

- Discard the fuel return line venturi O-ring seal.

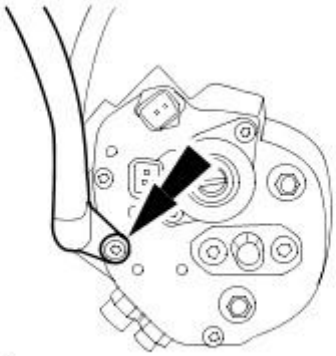

VUE0025302

58. Remove the fuel injection pump fuel supply line and fuel return line assembly from the fuel injection pump.

- Discard the fuel supply line O-ring seals.

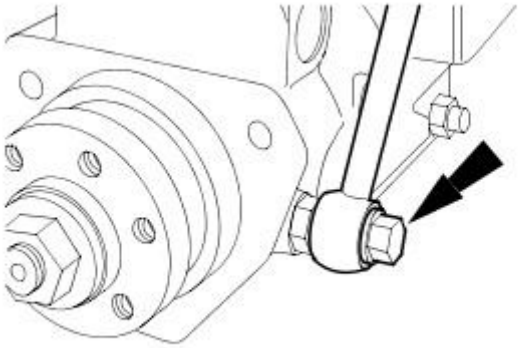

VUE 0025303

Installation

All vehicles

• WARNINGS:

Do not smoke or carry lighted tobacco or open flame of any type when working on or near any fuel related components. Highly flammable mixtures are always present and may ignite. Failure to follow these instructions may result in personal injury.

This procedure involves fuel handling. Be prepared for fuel spillage at all times and always observe fuel handling precautions. Failure to follow these instructions may result in personal injury.

• CAUTIONS:

Make sure the workshop area in which the vehicle is being worked on is as clean and as dust free as possible. Foreign matter from work on clutches, brakes or from machining or welding operations can contaminate the fuel system and may result in later malfunction.

Always carry out the cleaning process before carrying out any repairs to the fuel injection system components. Failure to follow this instruction may result in foreign matter ingress to the fuel injection system.

Diesel fuel injection equipment is manufactured to very precise tolerances and fine clearances. It is therefore essential that absolute cleanliness is observed when working with these components. Always install blanking plugs to any open orifices or lines.

Do not disassemble or clean inside the fuel injection pump, even with an ultrasonic cleaner. Always install a new fuel injection pump when required.

Install a new high-pressure fuel supply line. Failure to follow this instruction may result in damage to the vehicle.

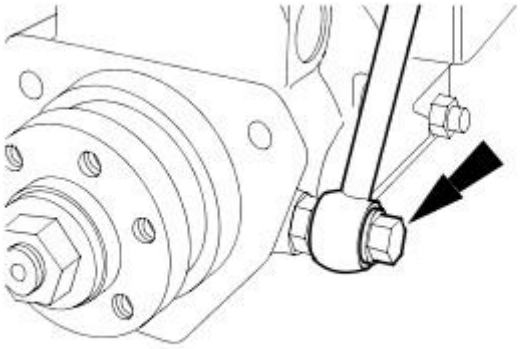

VUE 0025303

1. NOTE: Install new fuel injection pump supply line O-ring seals.

Install the fuel injection pump fuel supply line and fuel return line assembly to the fuel injection pump.

- Tighten 20 Nm.

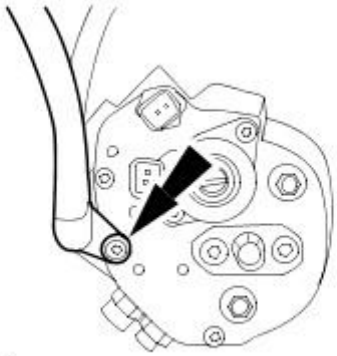

VUE0025302

2. NOTE: Install a new O-ring seal to the fuel return line venturi.

Attach the fuel return line venturi to the fuel injection pump.

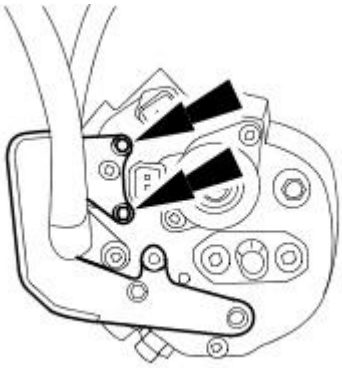

E45130

3. Install the fuel injection pump shield to the fuel injection pump.

- Tighten to 8 Nm.

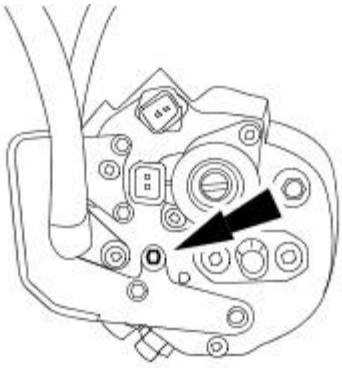

E45131

4. Install the fuel injection pump shield retaining bolt.

- Tighten to 33 Nm.

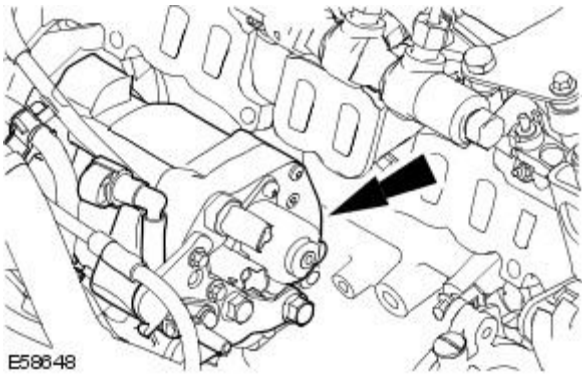

E58648

5. NOTE: Install a new fuel injection pump gasket.

• NOTE: Apply a small bead of loctite 572 on the fuel injection pump retaining bolts.

Install the fuel injection pump.

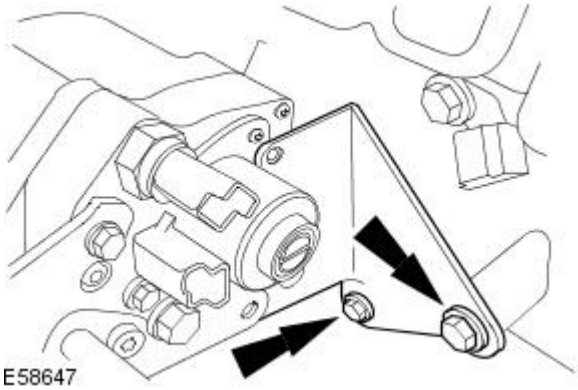

6. NOTE: Install the fuel injection pump retaining bolts evenly in order to pull the fuel injection pump squarely into position.

Loosely install the fuel injection pump support bracket to engine cylinder block retaining bolts.

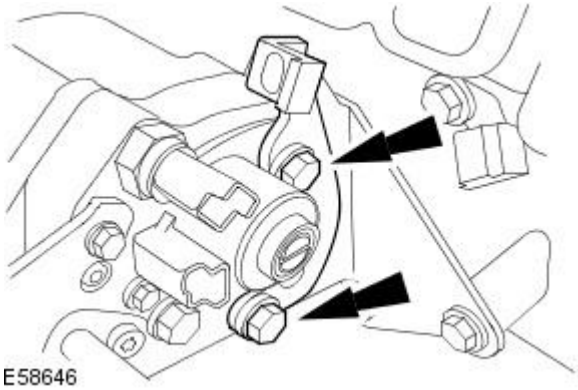

7. NOTE: Do not fully tighten the fuel injection pump support bracket bolts at this stage.

Install the fuel injection pump support bracket to the fuel injection pump.

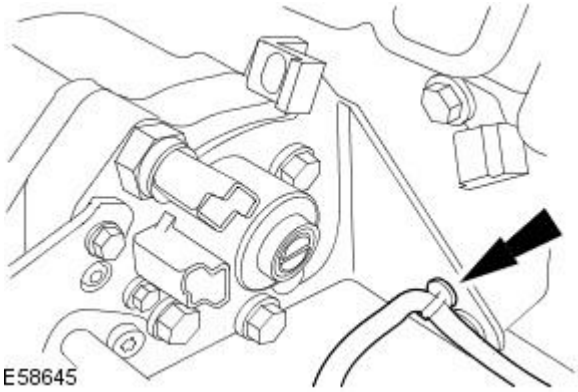

8. Attach the engine wiring harness.

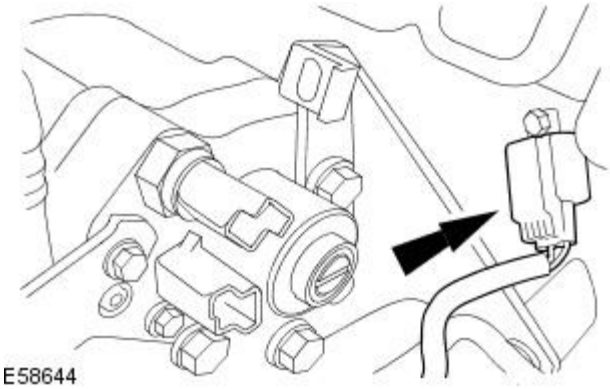

9. Connect the KS electrical connector.

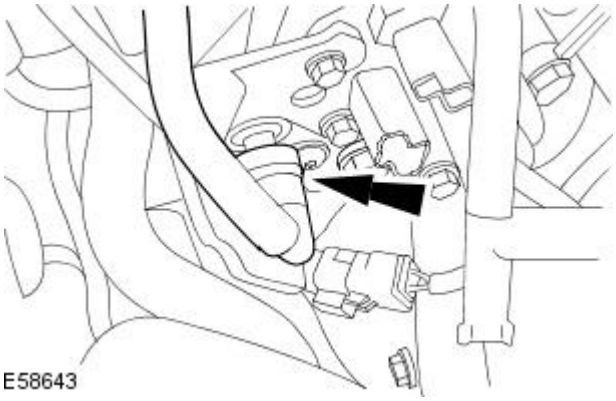

10. Connect the fuel pipe.

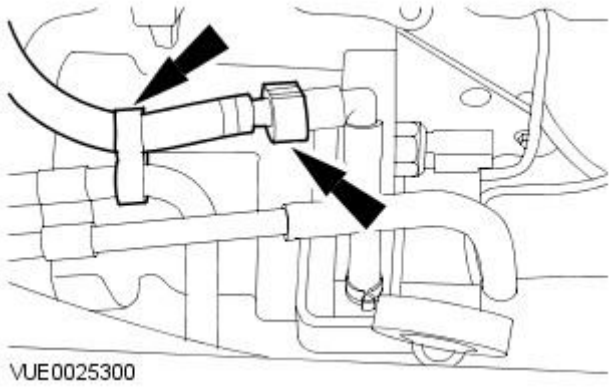

11. Connect the fuel injector to fuel injection pump fuel return line.

- Attach the fuel injector to fuel injection pump return line retaining clip (if equipped).
- Remove the blanking plugs from the fuel injector to fuel injection pump fuel return line male and female connectors.

12. From 2006 MY special tool numbers 303-681 and 303-681-01 have now been superseded by special tool numbers 303-1151 and 303-083A.

- To carry out the procedure using special tool numbers 303-1151 and 303-083A see steps 13 - 15.
- To carry out the procedure using special tool numbers 303-681 and 303-681-01 see steps 16 - 18.

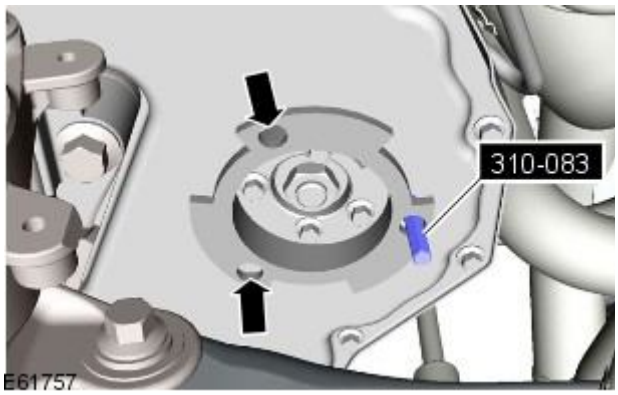

13. NOTE: For additional information, see step 12.

Using the special tool tighten the fuel injection pump retaining bolts.

- Tighten to 22 Nm.
- If available use special tool 303-083A.

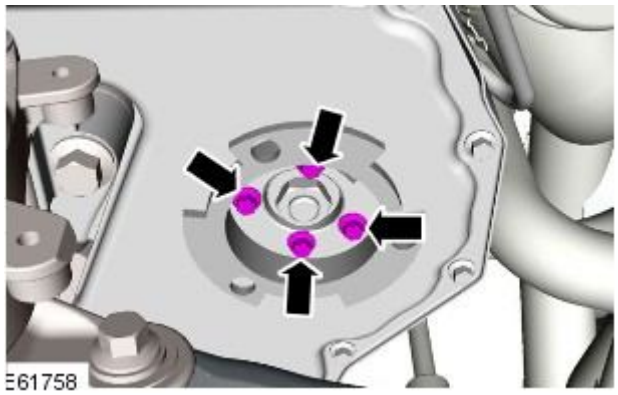

14. NOTE: For additional information, see step 12.

Install the fuel injection pump sprocket retaining bolts.

- Tighten to 32 Nm.

15. NOTE: For additional information, see step 12.

Remove the special tools.

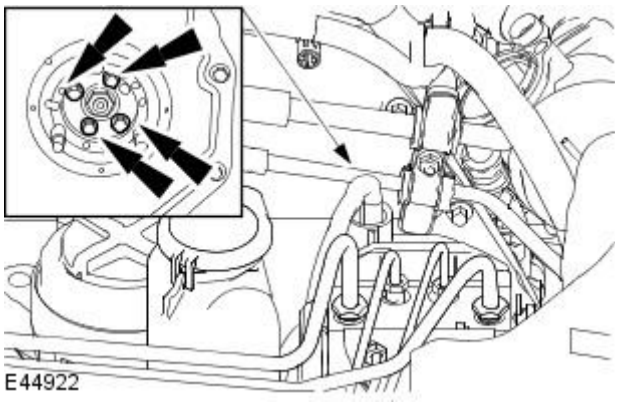

16. Install the fuel injection pump sprocket retaining bolts.

- Tighten to 32 Nm.

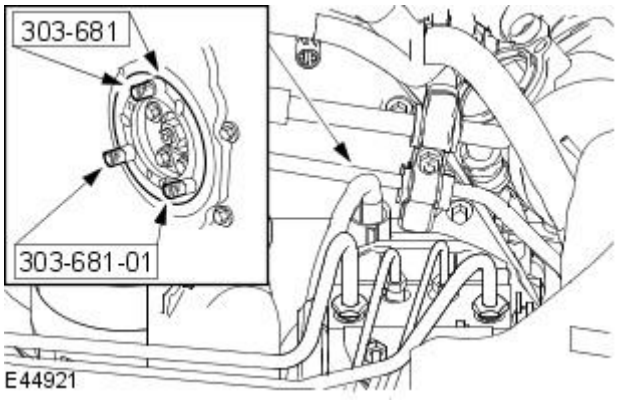

17. Remove the special tools.

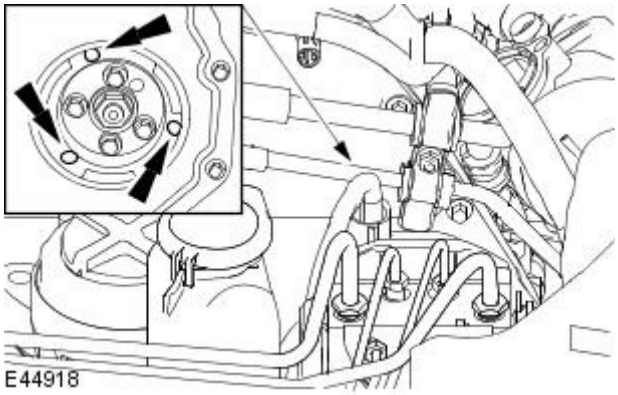

18. NOTE: Install the fuel injection pump retaining bolts evenly in order to pull the fuel injection pump squarely into position.

• NOTE: Use a torx 45 drive socket with a minimum shaft length of 43 mm (1.69 in).

Tighten the fuel injection pump retaining bolts.

- Tighten to 22 Nm.
- If available use special tool 303-083A.

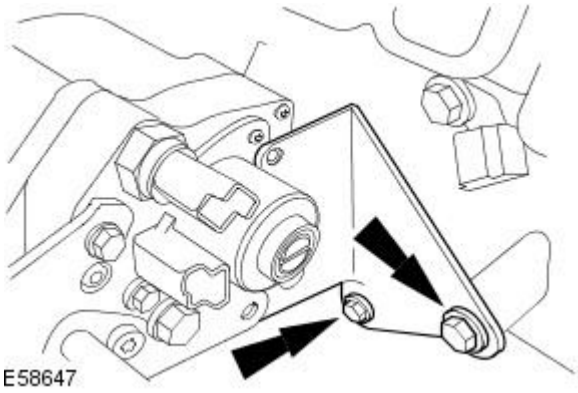

19. Tighten the fuel injection pump support bracket to cylinder block retaining bolts.

- Tighten to 23 Nm.

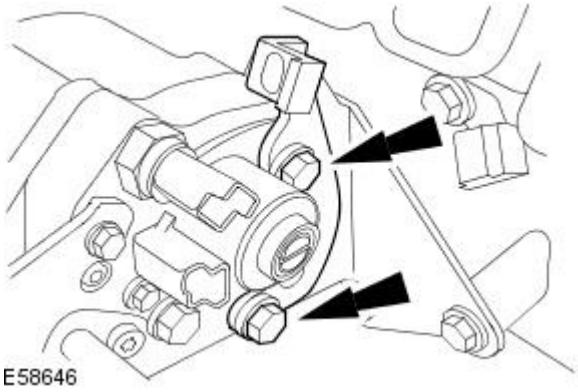

20. Tighten the fuel injection pump support bracket retaining bolts.

- Tighten to 33 Nm.

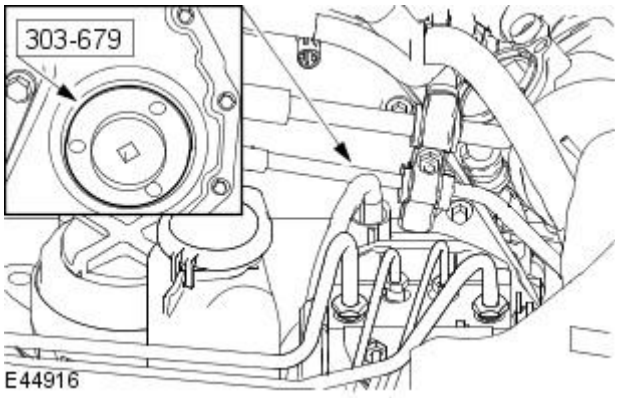

21. Using the special tool, install the fuel injection pump sprocket access cover.

Vehicles built from VIN:E43869

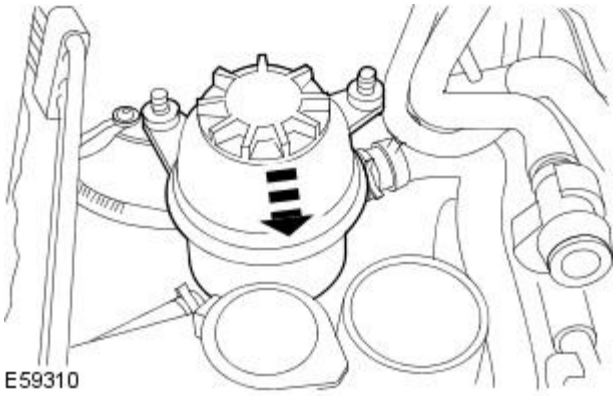

22. Attach the power steering fluid reservoir.

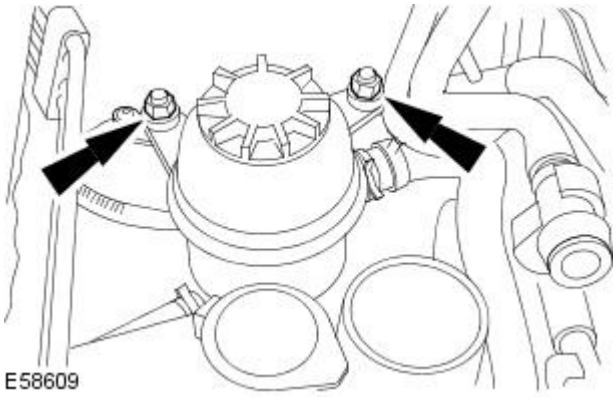

23. Install the power steering fluid reservoir retaining nuts.

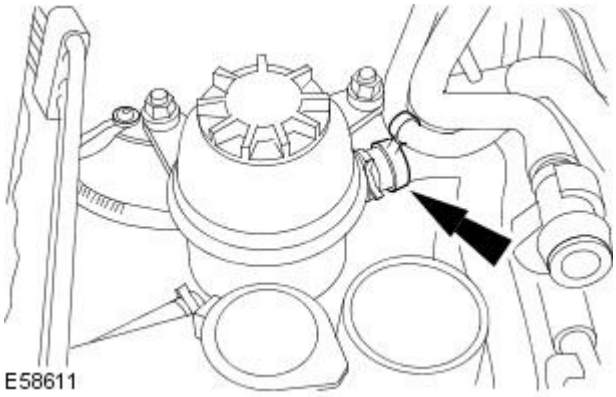

24. Attach the power steering pipe to the engine wiring harness securing clip.

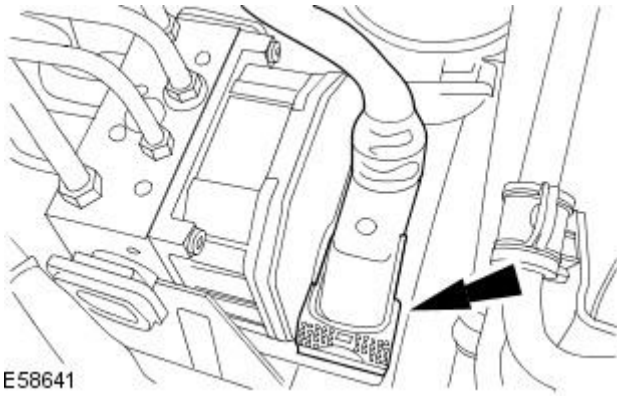

25. Connect the HCU electrical connector.

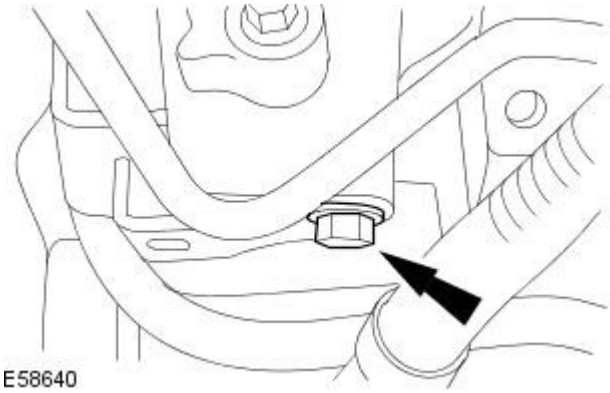

26. Attach the fuel supply and return lines.

- Tighten to 23 Nm.

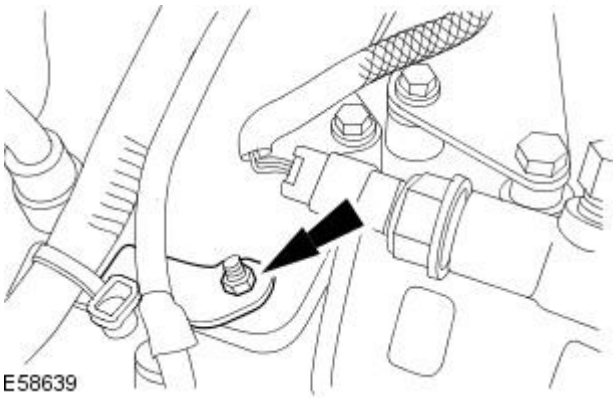

27. Install the fuel supply and return lines support bracket retaining nut.

- Tighten to 8 Nm.

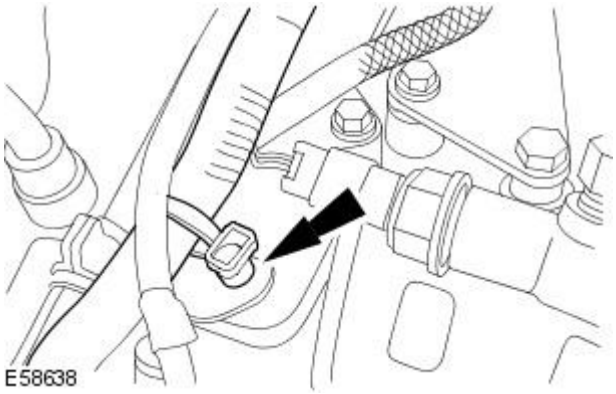

28. Attach the wiring harness retaining clip.

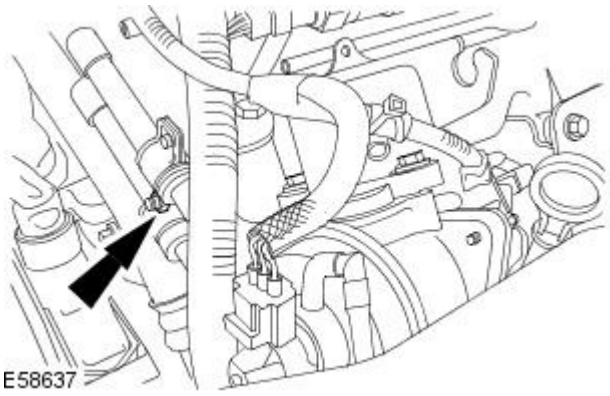

29. Install the fuel supply and return lines support bracket retaining nut.

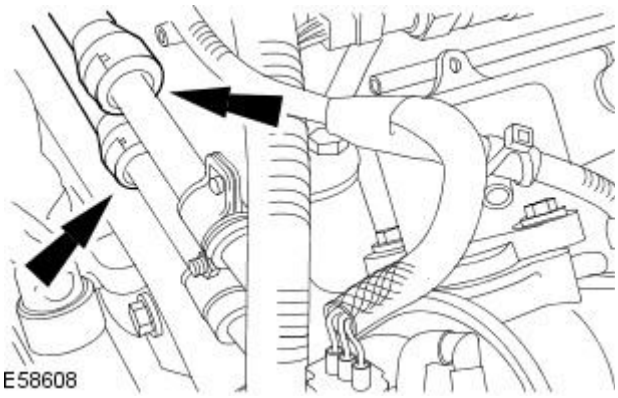

30. Connect the fuel injection pump fuel supply and return lines. For additional information, refer to: Quick Release Coupling - Push Connect (310-00 Fuel System - General Information, General Procedures).

Vehicles built up to VIN:E43868

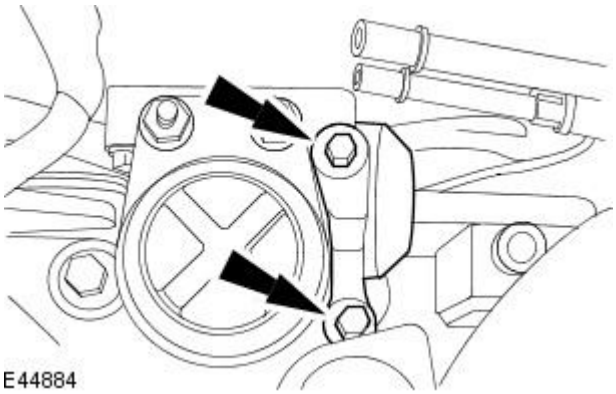

31. Install the engine mount damper.

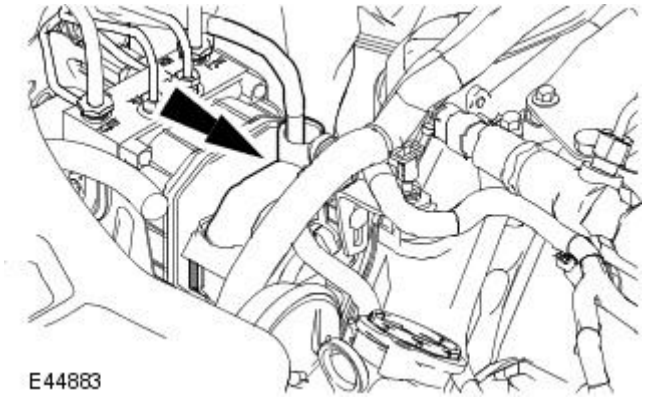

32. Connect the HCU electrical connector.

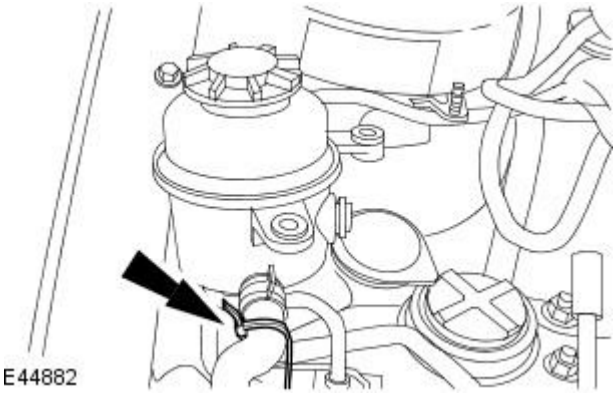

33. Detach the power steering fluid reservoir.

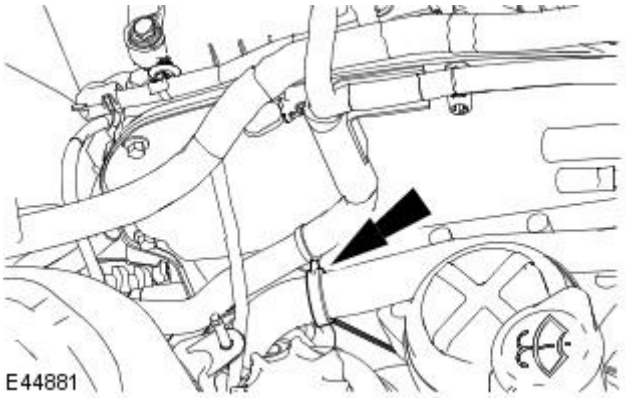

34. Attach the power steering fluid reservoir.

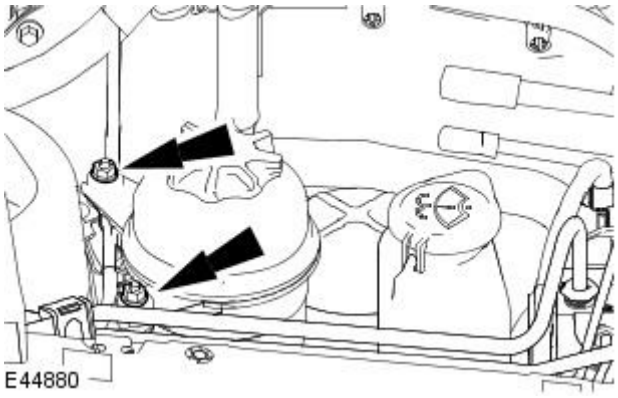

35. Install the power steering fluid reservoir retaining nuts.

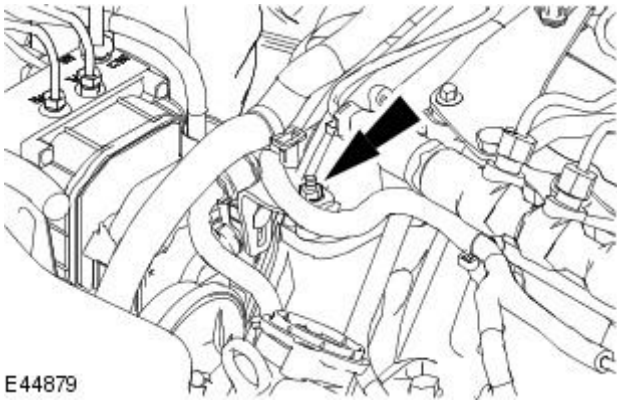

36. Attach the fuel supply and fuel return line support bracket.

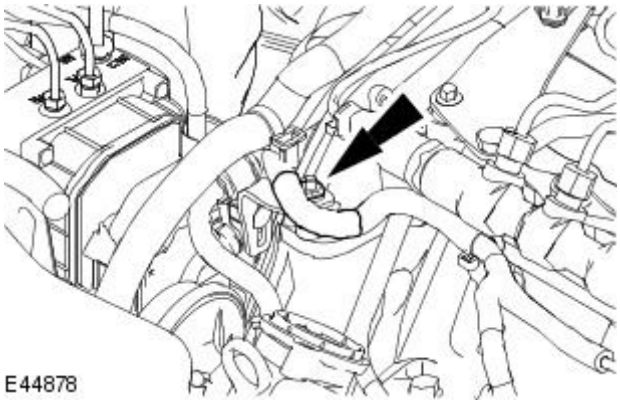

37. Attach the wiring harness retaining clip.

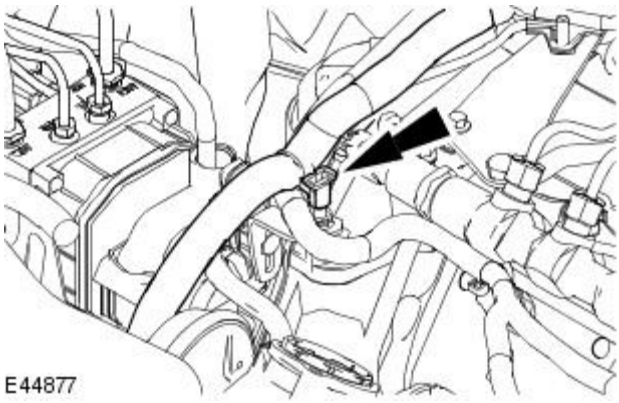

38. Attach the wiring harness retaining clip.

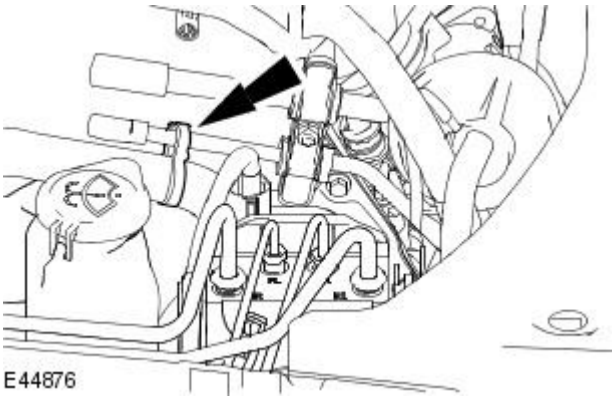

39. Attach the power steering fluid hose to the fuel return line.

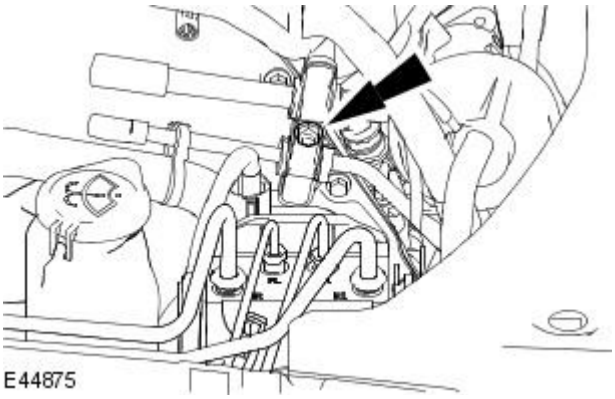

40. Tighten the fuel supply and return lines support bracket retaining nut.

- Tighten to 8 Nm.

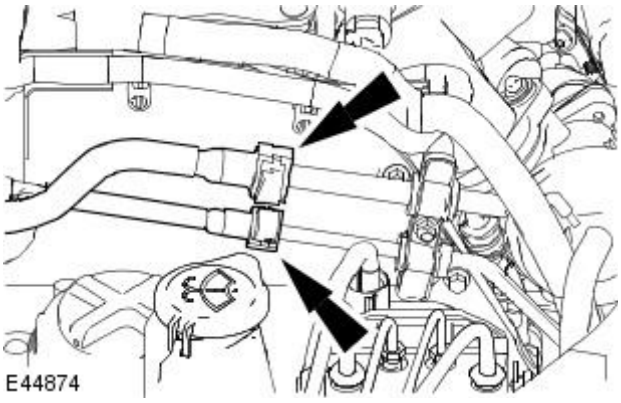

41. Connect the fuel injection pump fuel supply and return lines. For additional information, refer to: Quick Release Coupling - Push Connect (310-00 Fuel System - General Information, General Procedures).

- Remove the blanking plugs from the fuel injection pump fuel supply and return line male and female connectors.

All vehicles

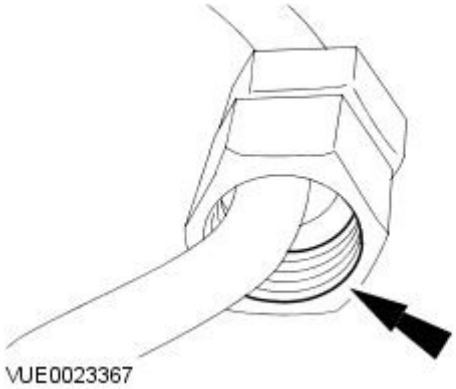

42. Using a suitable multipurpose lubricant spray, lubricate the high-pressure fuel supply line union threads.

43. Remove the blanking plugs from the fuel injection pump and fuel injection supply manifold threaded ports.

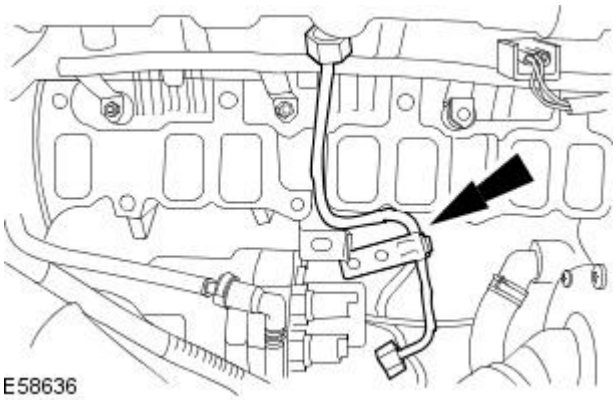

44. CAUTION: Do not allow the unions to hit the olive ends of the high-pressure fuel supply line as this may damage the ends of the line and allow foreign matter to enter the fuel injection system.

• NOTE: Position the high pressure fuel supply line as near to the final installation position as possible and then remove the blanking plugs from the high-pressure fuel supply line.

• NOTE: The yellow colored collar is fitted at the fuel injection pump end and the blue colored collar is fitted at the fuel injection supply manifold end of the high-pressure fuel supply line.

• NOTE: To aid identification of the high pressure fuel supply line, the union at the fuel injection pump end is etched with the word, Pump.

Install the high-pressure fuel supply line.

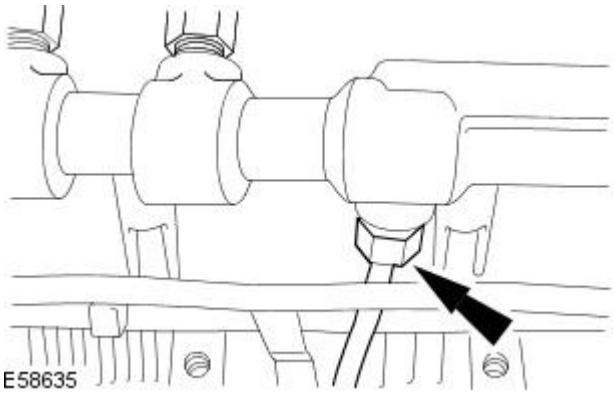

45. CAUTIONS:

Do not tighten the high-pressure fuel supply line union at this stage.

Maintain pressure on the high-pressure fuel supply line to keep the olive in contact with the fuel injection supply manifold cone while installing the union. Failure to follow this instruction may result in foreign matter ingress to the fuel injection system.

Loosely install the high-pressure fuel supply line to the fuel injection supply manifold.

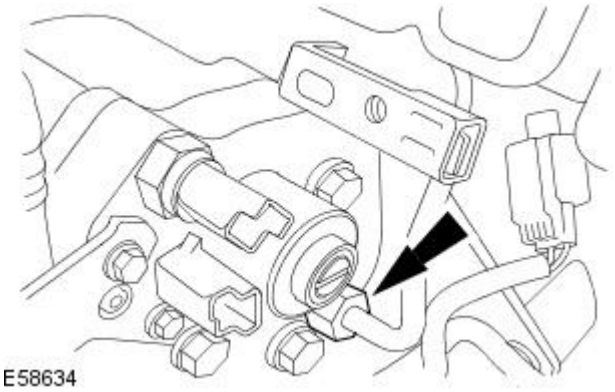

46. CAUTIONS:

Do not tighten the high-pressure fuel supply line union at this stage.

Maintain pressure on the high-pressure fuel supply line to keep the olive in contact with the fuel injection pump cone while installing the union. Failure to follow this instruction may result in foreign matter ingress to the fuel injection system.

Loosely install the high-pressure fuel supply line to the fuel injection pump.

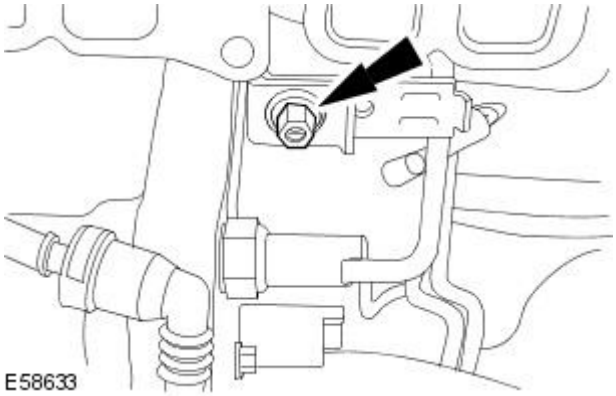

47. Attach the high-pressure fuel supply line support bracket.

- Tighten to 8 Nm.

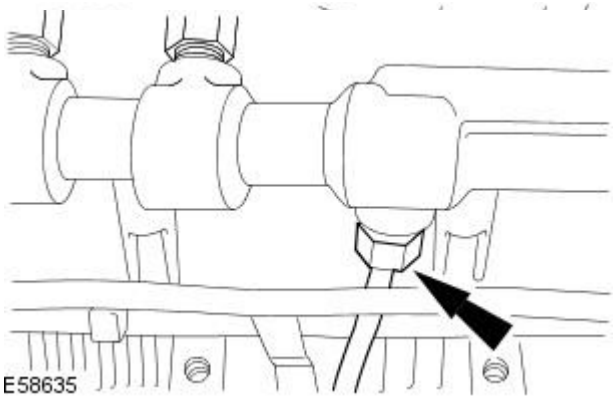

48. IONS:

49. CAUTION: Make sure the tool used to tighten the high-pressure fuel supply line union is used at the top of the union as this is where there is most material. Failure to follow this instruction may result in damage to the union.

Make sure the tool used to tighten the high-pressure fuel supply line union is used at the top of the union as this is where there is most material. Failure to follow this instruction may result in damage to the union.

Tighten the high-pressure fuel supply line union at the fuel injection supply manifold.

- Tighten to 40 Nm.

Make sure the tool used to tighten the high-pressure fuel supply line union does not come into contact with the inlet metering valve while tightening the high-pressure fuel supply line union. Failure to follow this instruction may result in fuel leaking from the union.

Tighten the high-pressure fuel supply line union at the fuel injection pump.

- Tighten to 40 Nm.

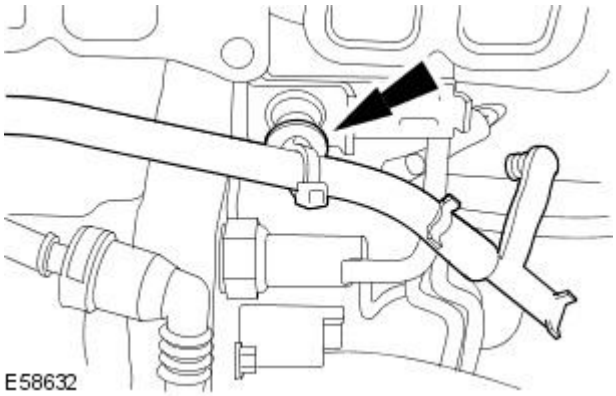

50. Attach the wiring harness.

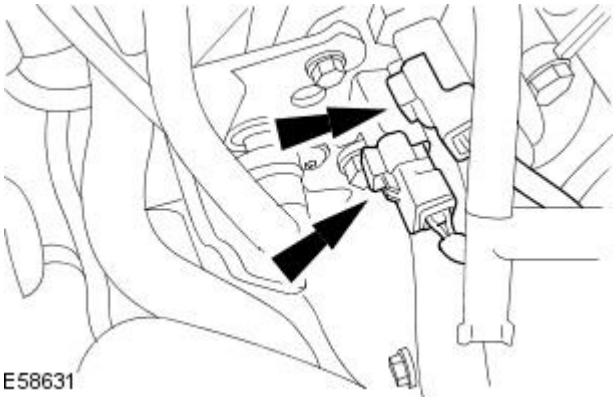

51. Connect the fuel metering valve and fuel temperature sensor electrical connectors.

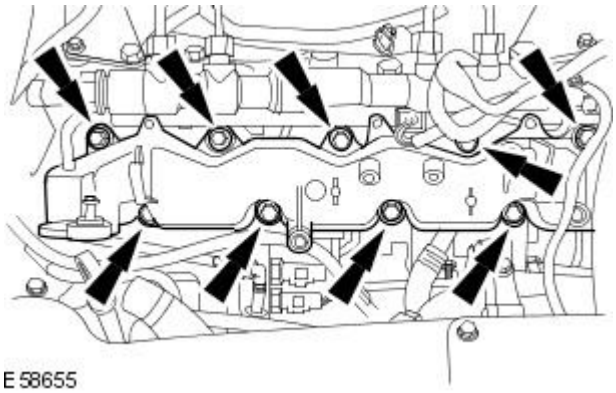

52. NOTE: Install new intake manifold gaskets.

Install the intake manifold.

- Tighten to 15 Nm.

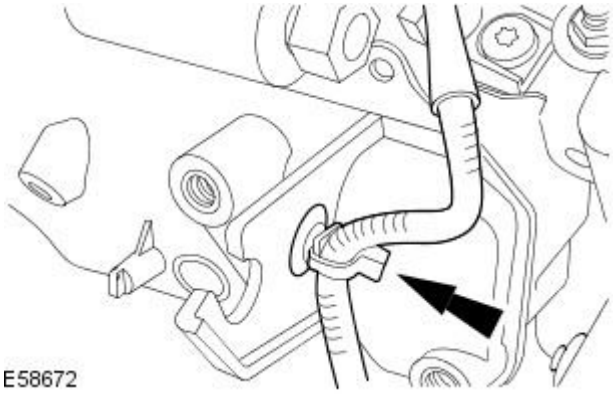

53. Attach the wiring harness onto the intake manifold.

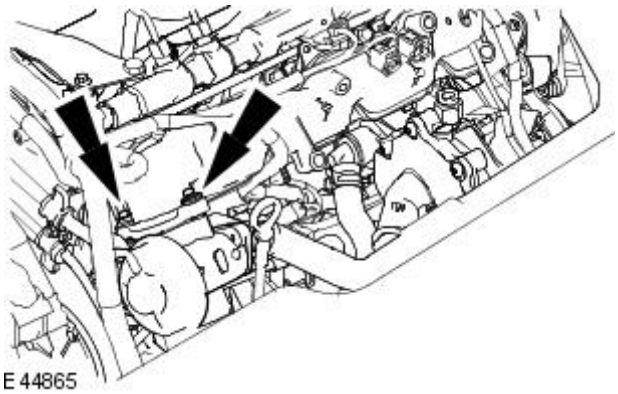

54. NOTE: Install a new EGR valve gasket.

Attach the EGR valve to the intake manifold.

- Tighten to 10 Nm.

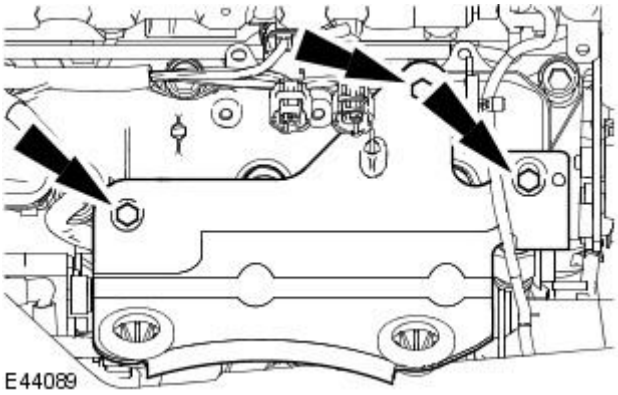

55. Install the air cleaner mount bracket.

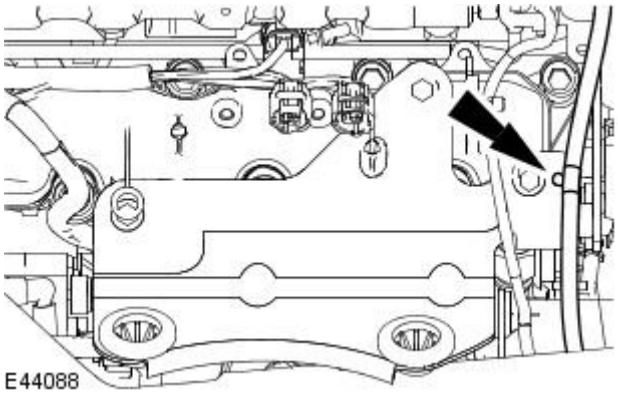

56. Attach the wiring harness.

57. Install the EGR cooler to EGR valve tube.
For additional information, refer to: Exhaust Gas Recirculation (EGR) Cooler to EGR Valve Tube (303-08 Engine Emission Control - 2.0L Diesel/2.2L Diesel, Removal and Installation).

58. Install a new fuel filter.
For additional information, refer to: Fuel Filter - 2.0L Duratorq-TDCi/2.2L Duratorq-TDCi (110kW/150PS) - Puma (310-01 Fuel Tank and Lines, Removal and Installation).

Published: 11-May-2011

Fuel Charging and Controls - 2.0L Duratorq-TDCi / 2.2L Duratorq-TDCi (110kW / 150PS) - Puma - Fuel Injection Supply Manifold

Removal and Installation

Special Tool(s)	
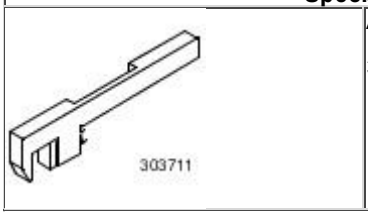	Aligner, Fuel Injector 303-711 (21-258)

General Equipment

Pneumatic vacuum gun

Materials

Name	Specification
High pressure fuel supply line union	TBD
lubricant TBD	

Removal

• WARNINGS:

Wait at least 15 minutes after the engine stops before commencing any repair to the high pressure fuel injection system. Failure to follow this instruction may result in personal injury.

Do not smoke or carry lighted tobacco or open flame of any type when working on or near any fuel related components. Highly flammable mixtures are always present and may ignite. Failure to follow these instructions may result in personal injury.

This procedure involves fuel handling. Be prepared for fuel spillage at all times and always observe fuel handling precautions. Failure to follow these instructions may result in personal injury.

Do not carry out any repairs to the fuel injection system with the engine running. The fuel pressure within the system can be as high as 1600 bar. Failure to follow this instruction may result in personal injury.

• CAUTIONS:

Make sure the workshop area in which the vehicle is being worked on is as clean and as dust free as possible. Foreign matter from work on clutches, brakes or from machining or welding operations can contaminate the fuel system and may result in later malfunction.

Always carry out the cleaning process before carrying out any repairs to the fuel injection system components. Failure to follow this instruction may result in foreign matter ingress to the fuel injection system.

Diesel fuel injection equipment is manufactured to very precise tolerances and fine clearances. It is therefore essential that absolute cleanliness is observed when working with these components. Always install blanking plugs to any open orifices or lines.

Do not disassemble or clean inside the fuel injection supply manifold, even with an ultrasonic cleaner. Always install a new fuel injection supply manifold when required.

1. Remove the intake manifold.
For additional information, refer to: Intake Manifold (303-01B Engine - 2.0L Duratorq-TDCi/2.2L Duratorq-TDCi (110kW/150PS) - Puma, In-vehicle Repair).

2. NOTE: Protect the electrical connectors with lint-free material to prevent contamination from the cleaning fluid.

Disconnect the fuel metering valve and fuel temperature sensor electrical connectors.

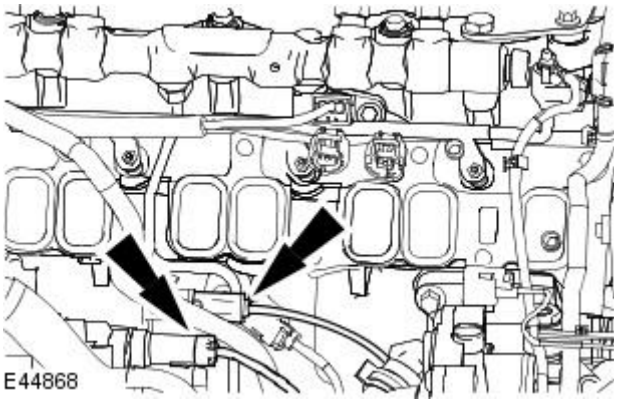

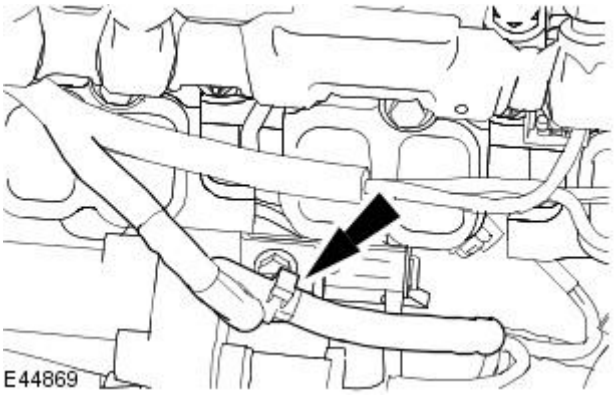

3. Detach the wiring harness.

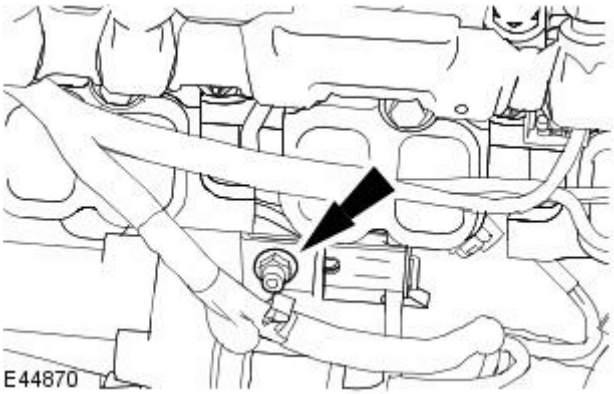

4. Detach the high pressure fuel supply line support bracket.

5. Clean the fuel pump, high pressure fuel supply line and surrounding areas.
For additional information, refer to: Fuel Injection Component Cleaning (303-04B Fuel Charging and Controls - 2.0L Duratorq-TDCi/2.2L Duratorq-TDCi (110kW/150PS) - Puma, General Procedures).

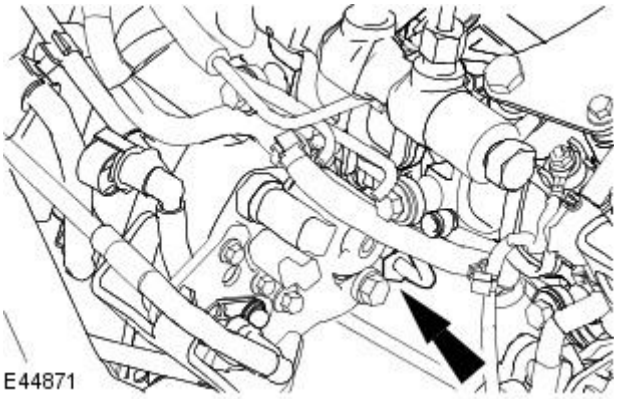

6. CAUTIONS:

Make sure the tool used to loosen the high pressure fuel supply line union is used at the top of the union as this is where there is most material. Failure to follow this instruction may result in damage to the union.

Maintain pressure on the high pressure fuel supply line to keep the olive in contact with the fuel pump cone while unscrewing the union. Failure to follow this instruction may result in foreign matter ingress to the fuel injection system.

Loosen the high pressure fuel supply line at the fuel pump.

7. CAUTION: Make sure that the high pressure fuel supply line remains in contact with both the fuel pump and the fuel injection supply manifold until both unions have been detached and cleaned. Failure to follow this instruction may result in foreign matter ingress to the fuel injection system.

Using the pneumatic vacuum gun, vacuum foreign material from the high pressure fuel supply line and the fuel pump.

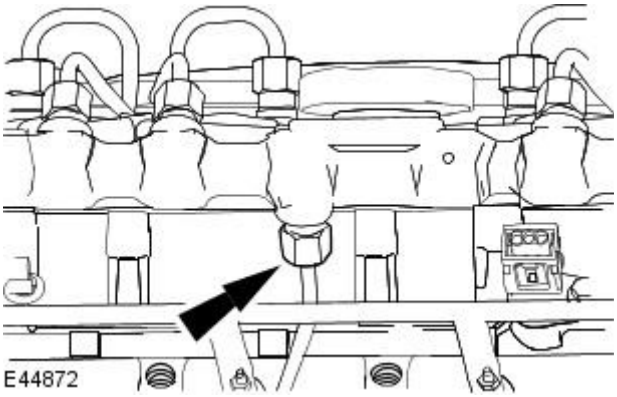

8. CAUTIONS:

Make sure the tool used to loosen the high pressure fuel supply line union is used at the top of the union as this is where there is most material. Failure to follow this instruction may result in damage to the union.

Maintain pressure on the high pressure fuel supply line to keep the olive in contact with the fuel injection supply manifold cone while unscrewing the union. Failure to follow this instruction may result in foreign matter ingress to the fuel injection system.

While maintaining the pressure on the high pressure fuel supply line, clean and vacuum foreign material from the line and union.

Loosen the high pressure fuel supply line at the fuel injection supply manifold.

9. CAUTION: Make sure that the high pressure fuel supply line remains in contact with both the fuel pump and the fuel injection supply manifold until both unions have been detached and cleaned. Failure to follow this instruction may result in foreign matter ingress to the fuel injection system.

Using the pneumatic vacuum gun, vacuum foreign material from the high pressure fuel supply line and the fuel injection supply manifold.

10. Remove and discard the high pressure fuel supply line.

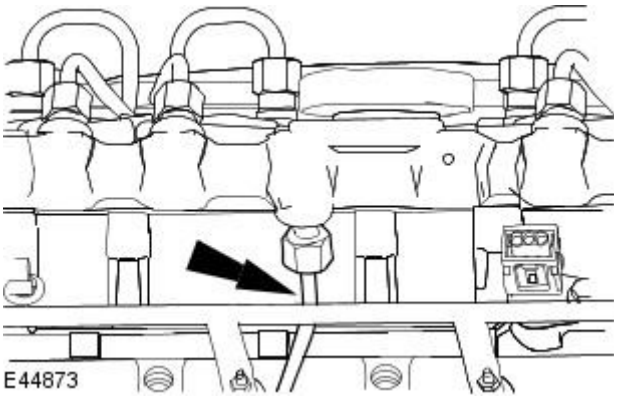

11. Using the pneumatic vacuum gun, vacuum foreign material from the fuel pump and the fuel injection supply manifold.

12. Install blanking caps to the open threaded ports on the fuel pump and the fuel injection supply manifold.

13. Clean the fuel injectors, fuel injection supply manifold, high pressure fuel supply lines and surrounding areas.
For additional information, refer to: Fuel Injection Component Cleaning (303-04B Fuel Charging and Controls - 2.0L Duratorq-TDCi/2.2L Duratorq-TDCi (110kW/150PS) - Puma, General Procedures).

14. Disconnect the fuel pressure sensor electrical connector.

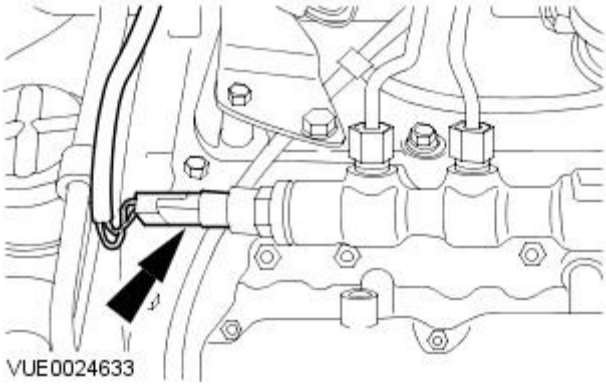

15. CAUTIONS:

Make sure that the high pressure fuel supply line remains in contact with both the fuel injector and the fuel injection supply manifold until both unions have been detached and cleaned. Failure to follow this instruction may result in foreign matter ingress to the fuel injection system.

Make sure the tool used to loosen the high pressure fuel supply line unions is used at the top of the unions as this is where there is most material. Failure to follow this instruction may result in damage to the unions.

Make sure that the fuel injector does not move when loosening the high pressure fuel supply lines. Failure to follow this instruction will result in damage to the fuel injector and the fuel injector sealing washer.

Loosen the high pressure fuel supply line from the fuel injector and the fuel injection supply manifold.

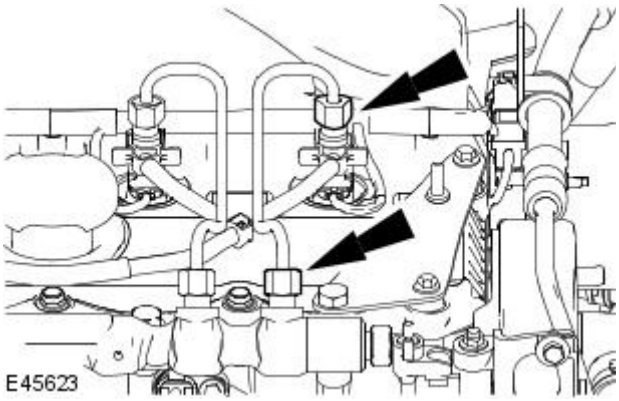

16. CAUTION: Make sure that the high pressure fuel supply line remains in contact with both the fuel injector and the fuel injection supply manifold until both unions have been detached and cleaned. Failure to follow this instruction may result in foreign matter ingress to the fuel injection system.

Using the pneumatic vacuum gun, vacuum foreign material from the fuel injector and the fuel injection supply manifold.

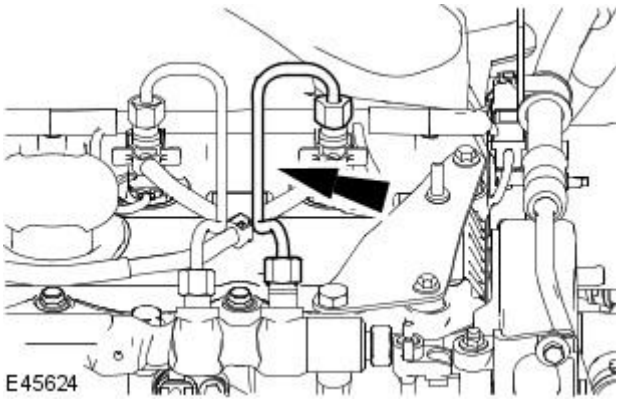

17. Remove and discard the high pressure fuel supply line.

18. Repeat steps 14 and ,15 to remove the 3 remaining high pressure fuel supply lines.

19. Using the pneumatic vacuum gun, vacuum foreign material from the fuel injector and the fuel injection supply manifold.

20. Install blanking caps to the open threaded ports on the fuel injectors and the fuel injection supply manifold.

21. Remove the fuel injection supply manifold retaining bolts.

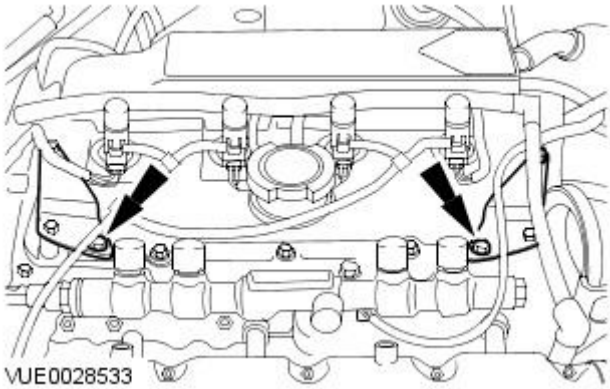

22. Loosen the fuel injection supply manifold support brackets.

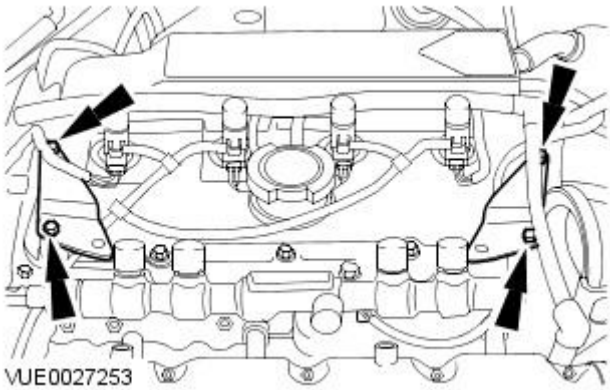

23. Remove the fuel injection supply manifold.

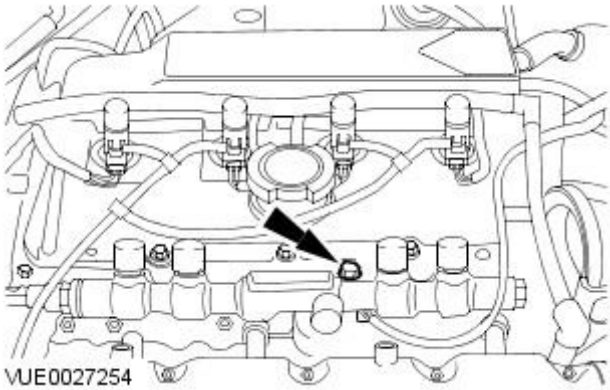

Installation

• WARNINGS:

Do not smoke or carry lighted tobacco or open flame of any type when working on or near any fuel related components. Highly flammable mixtures are always present and may ignite. Failure to follow these instructions may result in personal injury.

This procedure involves fuel handling. Be prepared for fuel spillage at all times and always observe fuel handling precautions. Failure to follow these instructions may result in personal injury.

• CAUTIONS:

Make sure the workshop area in which the vehicle is being worked on is as clean and as dust free as possible. Foreign matter from work on clutches, brakes or from machining or welding operations can contaminate the fuel system and may result in later malfunction.

Always carry out the cleaning process before carrying out any repairs to the fuel injection system components. Failure to follow this instruction may result in foreign matter ingress to the fuel injection system.

Diesel fuel injection equipment is manufactured to very precise tolerances and fine clearances. It is therefore essential that absolute cleanliness is observed when working with these components. Always install blanking plugs to any open orifices or lines.

Do not disassemble or clean inside the fuel injection supply manifold, even with an ultrasonic cleaner. Always install a new fuel injection supply manifold when required.

• NOTE: Install new high pressure fuel supply lines.

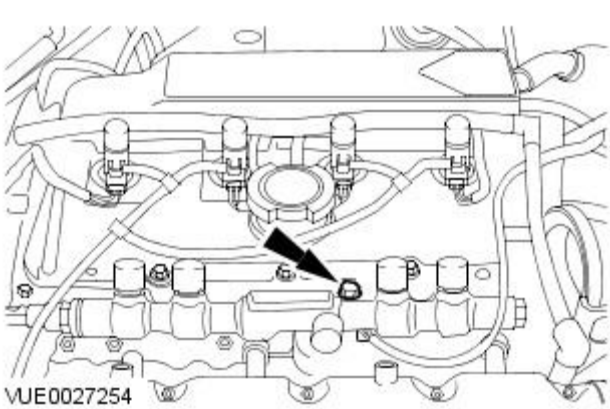

1. NOTE: Do not tighten the fuel injection supply manifold retaining bolt at this stage.

Install the fuel injection supply manifold.

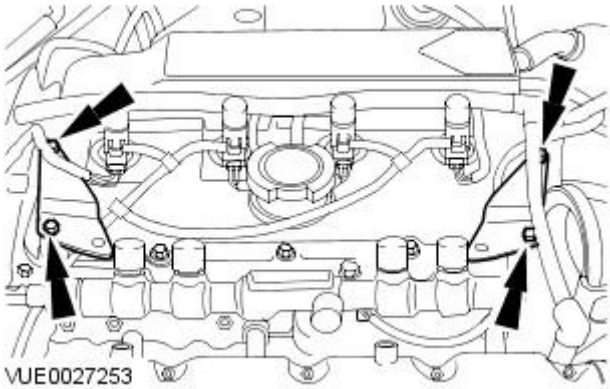

2. NOTE: Do not tighten the fuel injection supply manifold support bracket bolts at this stage.

Install the fuel injection supply manifold support brackets.

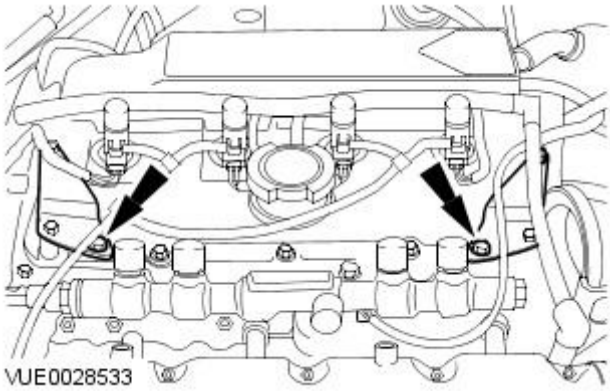

3. NOTE: Do not tighten the fuel injection supply manifold retaining bolts at this stage.

Install the fuel injection supply manifold retaining bolts.

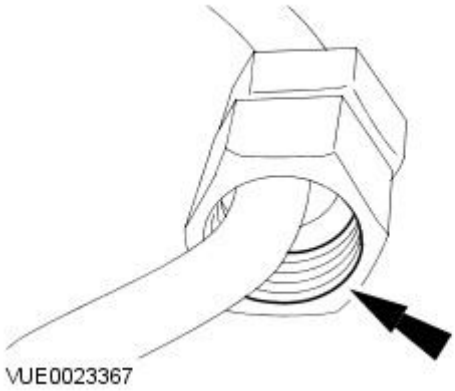

4. Lubricate the new high pressure fuel supply line union threads with clean lubricant.

5. CAUTION: Do not allow the unions to hit the olive ends of the high pressure fuel supply line as this may damage the ends of the line and allow foreign matter to enter the fuel injection system.

• NOTE: The yellow colored collar is fitted at the fuel pump end and the blue colored collar is fitted at the fuel injection supply manifold end of the high pressure fuel supply line.

• NOTE: To aid identification of the high pressure fuel supply lines, the union at the fuel pump end is etched with the word Pump.

Position the high pressure fuel supply line as near to the final installation position as possible and then remove and discard the blanking plugs from the high pressure fuel supply line.

6. Remove the blanking plugs from the fuel pump and the fuel injection supply manifold threaded ports.

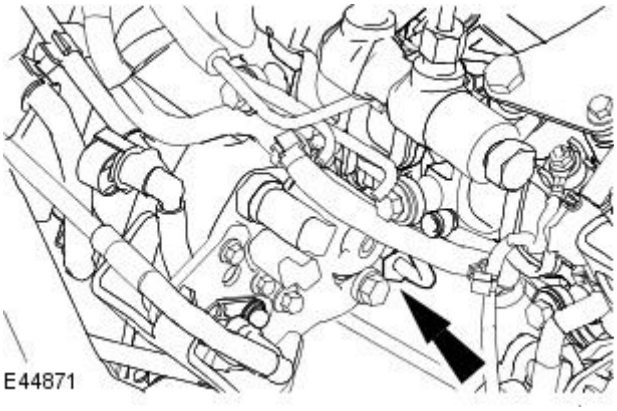

7. CAUTIONS:

Do not tighten the high pressure fuel supply line union at this stage.

Maintain pressure on the high pressure fuel supply line to keep the olive in contact with the fuel pump cone while hand installing the union. Failure to follow this instruction may result in foreign matter ingress to the fuel injection system.

Install the high pressure fuel supply line to the fuel pump.

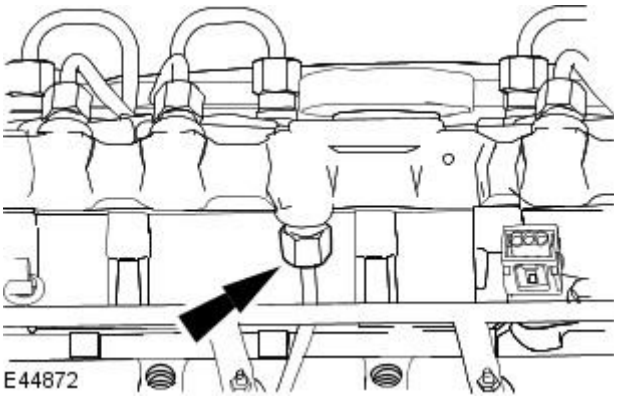

8. CAUTIONS:

Do not tighten the high pressure fuel supply line union at this stage.

Maintain pressure on the high pressure fuel supply line to keep the olive in contact with the fuel injection supply manifold cone while hand installing the union. Failure to follow this instruction may result in foreign matter ingress to the fuel injection system.

Install the high pressure fuel supply line to the fuel injection supply manifold.

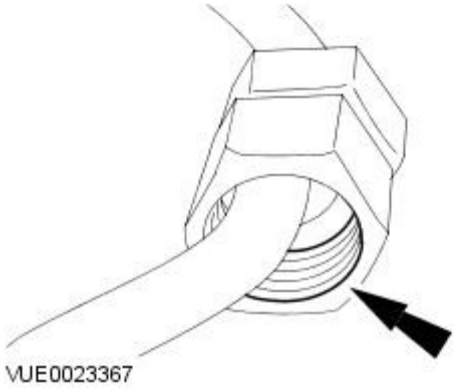

9. Lubricate the new high pressure fuel supply line union threads with clean lubricant.

10. CAUTION: Do not allow the unions to hit the olive ends of the high pressure fuel supply line as this may damage the ends of the line and allow foreign matter to enter the fuel injection system.

• NOTE: The yellow colored collar is fitted at the fuel injector end and the blue colored collar is fitted at the fuel supply manifold end of the high pressure fuel supply line.

• NOTE: To aid identification of the high pressure fuel supply line, the union at the fuel injector end is etched with the cylinder number.

Position the high pressure fuel supply line as near to the final installation position as possible and then remove and discard the blanking plugs from the high pressure fuel supply line.

11. Remove the blanking plugs from the fuel injector and the fuel injection supply manifold threaded ports.

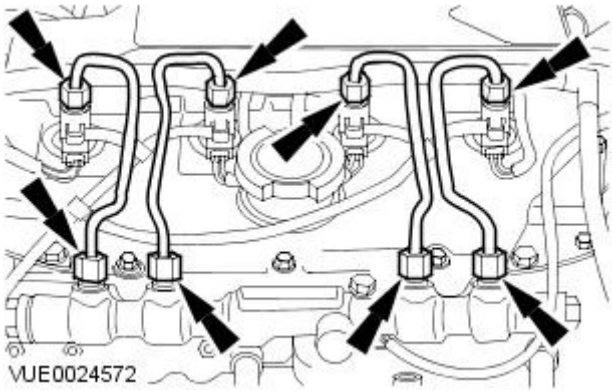

12. CAUTION: Maintain pressure on the high pressure fuel supply line to keep the olives in contact with the fuel injectors and the fuel injection supply manifold cones while hand installing the unions.

• NOTE: Install the high pressure fuel supply lines to the fuel injection supply manifold end first followed by the fuel injector end.

• NOTE: Do not tighten the high pressure fuel supply line unions at this stage.

Install new high pressure fuel supply lines.

13. NOTE: High pressure fuel supply lines shown removed for clarity.

Tighten the fuel injection supply manifold support brackets.

- Tighten to 14 Nm.

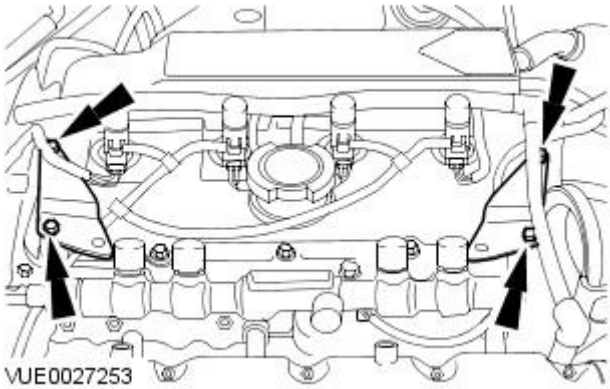

14. NOTE: High pressure fuel supply lines shown removed for clarity.

Tighten the fuel injection supply manifold retaining bolts.

- Tighten to 23 Nm.

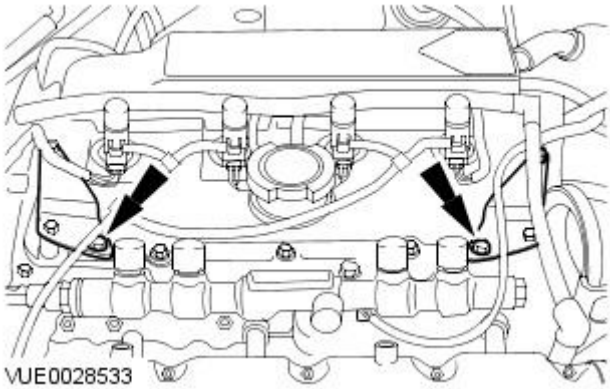

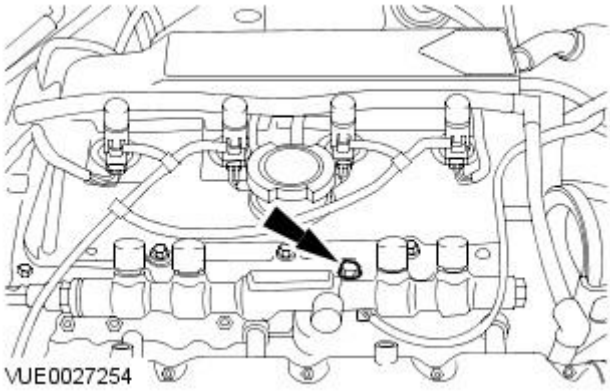

15. NOTE: High pressure fuel supply lines shown removed for clarity.

Tighten the fuel injection supply manifold retaining bolt.

- Tighten to 23 Nm.

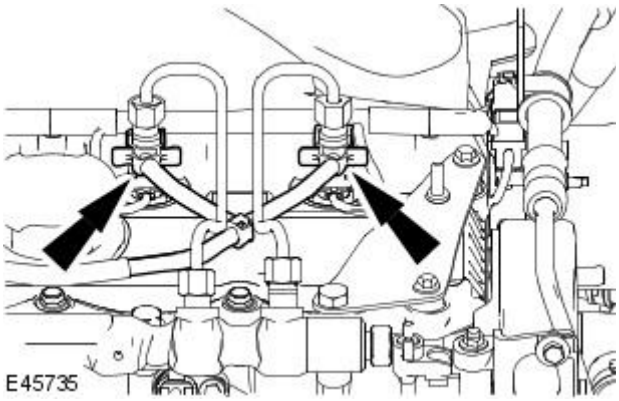

16. NOTE: Two fuel injector shown, other fuel injectors similar.

Disconnect the fuel return lines from the fuel injectors.

- Discard the fuel return line O-ring seal.

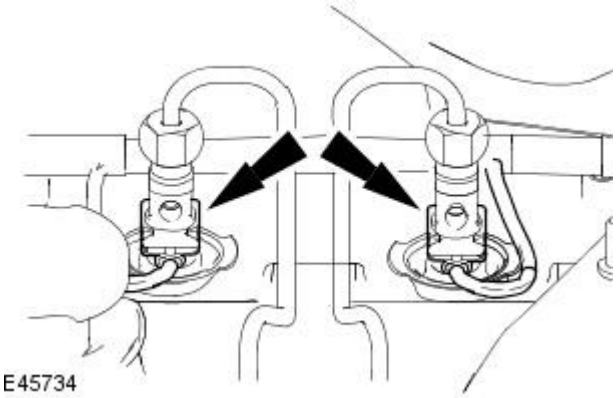

17. NOTE: Two fuel injector shown, other fuel injectors similar.

Disconnect the fuel injector electrical connectors.

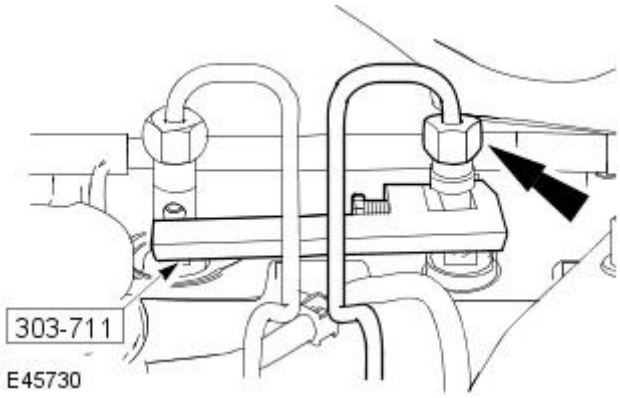

18. CAUTIONS:

Make sure the special tool is clamped around the fuel injector which is being tightened and is resting up against the adjacent fuel injector.

Make sure the tool used to tighten the high pressure fuel supply line unions is used at the top of the union as this is where there is most material. Failure to follow this instruction may result in damage to the union.

Make sure that the fuel injector does not move when tightening the high pressure fuel supply lines. Failure to follow this instruction will result in damage to the fuel injector and the fuel injector sealing washer.

Install the special tool and tighten the high pressure fuel supply line union at the fuel injector.

- Tighten to 40 Nm.

19. Remove the special tool.

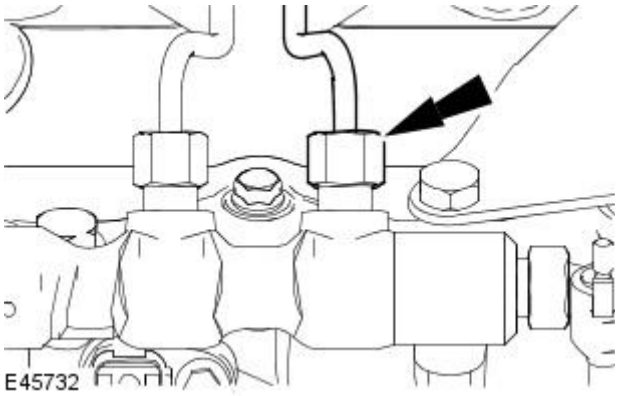

20. CAUTION: Make sure the tool used to tighten the high pressure fuel supply line unions is used at the top of the union as this is where there is most material. Failure to follow this instruction may result in damage to the union.

Tighten the high pressure fuel supply line union at the fuel injection supply manifold.

- Tighten to 40 Nm.

21. Repeat steps 16, 17 and 18 for tightening the 3 remaining high pressure fuel supply line unions.

22. NOTE: Cylinders three and four fuel injectors shown, cylinders one and two fuel injectors similar.

Connect the fuel injector electrical connectors.

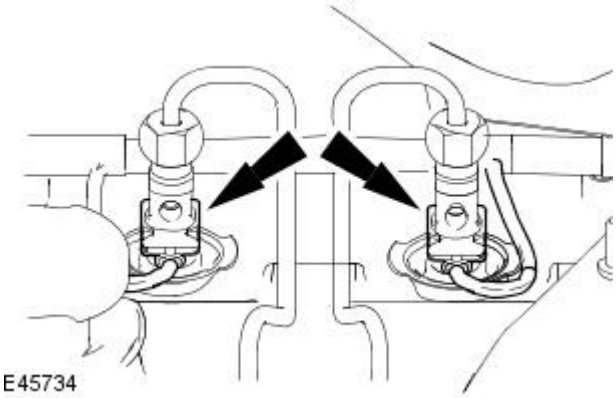

23. NOTE: Cylinders three and four fuel injectors shown, cylinders one and two fuel injectors similar.

Connect the fuel return lines to the fuel injectors.

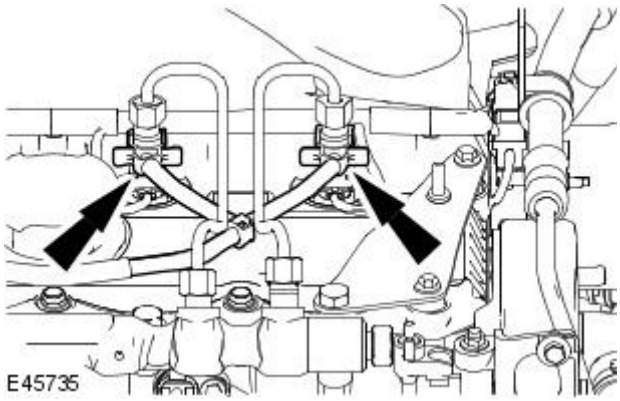

24. Connect the fuel pressure sensor electrical connector.

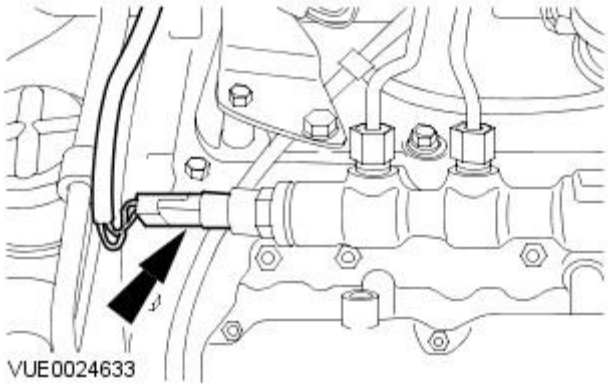

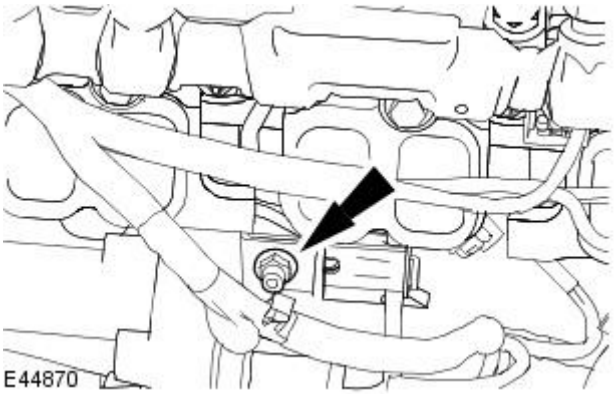

25. Attach the high pressure fuel supply line support bracket.

- Tighten to 8 Nm.

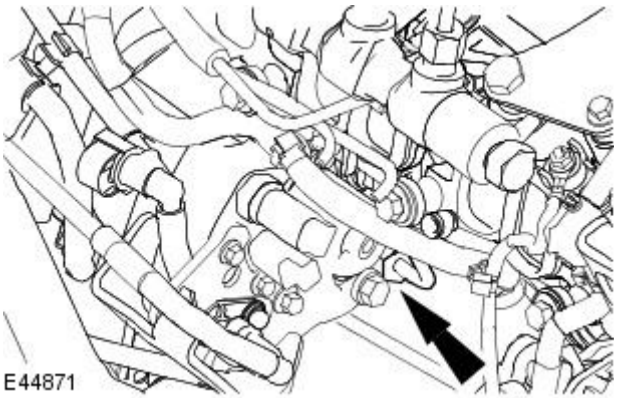

26. CAUTIONS:

Make sure the tool used to tighten the high pressure fuel supply line union is used at the top of the union as this is where there is most material. Failure to follow this instruction may result in damage to the union.

Make sure the tool used to tighten the high pressure fuel supply line union does not come into contact with the inlet metering valve while tightening the high pressure fuel supply line union. Failure to follow this instruction may result in fuel leaking from the union.

Tighten the high pressure fuel supply line union at the fuel pump.

- Tighten to 40 Nm.

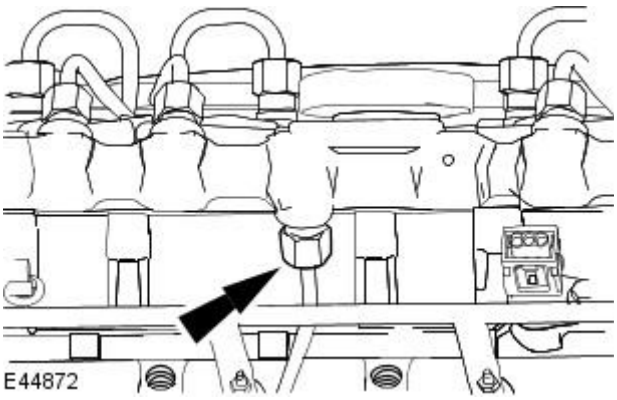

27. CAUTION: Make sure the tool used to tighten the high pressure fuel supply line union is used at the top of the union as this is where there is most material. Failure to follow this instruction may result in damage to the union.

Tighten the high pressure fuel supply line union at the fuel injection supply manifold.

- Tighten to 40 Nm.

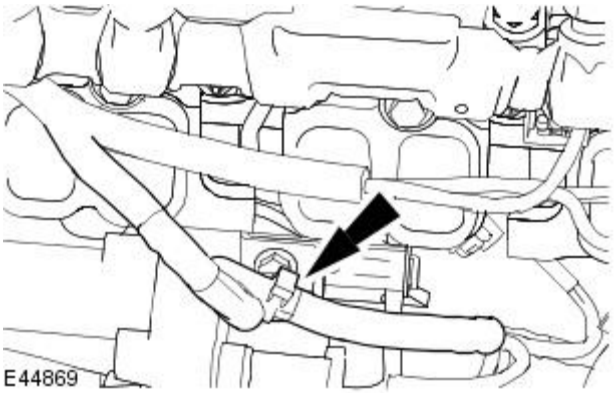

28. Attach the wiring harness.

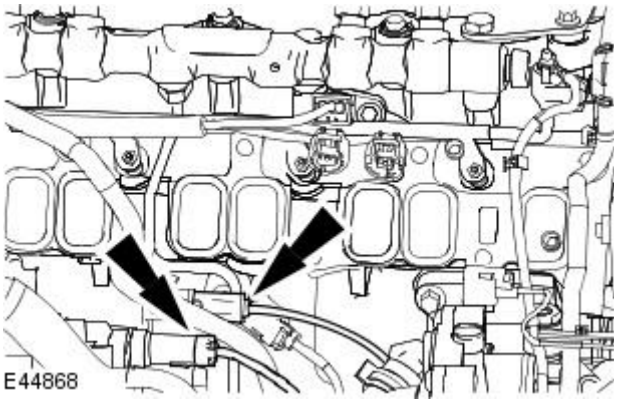

29. Connect the fuel metering valve and fuel temperature sensor electrical connectors.

30. Install the intake manifold.
For additional information, refer to: Intake Manifold (303-01B Engine - 2.0L Duratorq-TDCi/2.2L Duratorq-TDCi (110kW/150PS) - Puma, In-vehicle Repair).

31. Install the engine cover.

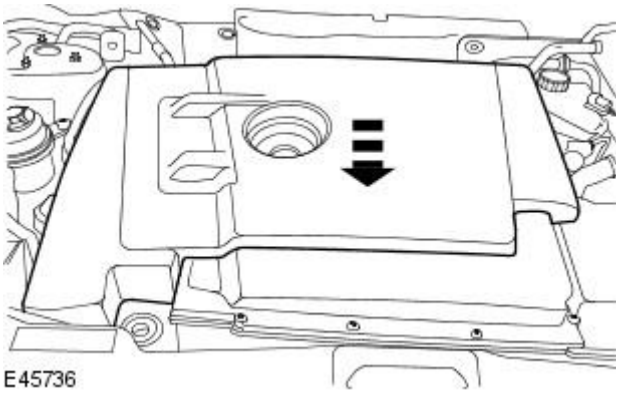

32. Install the oil filler cap.

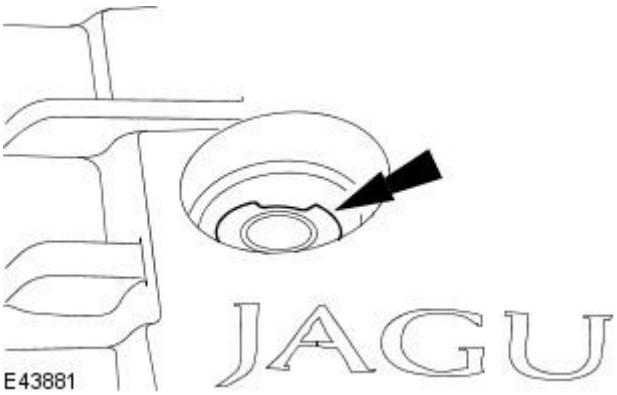

33. Install the oil level indicator.

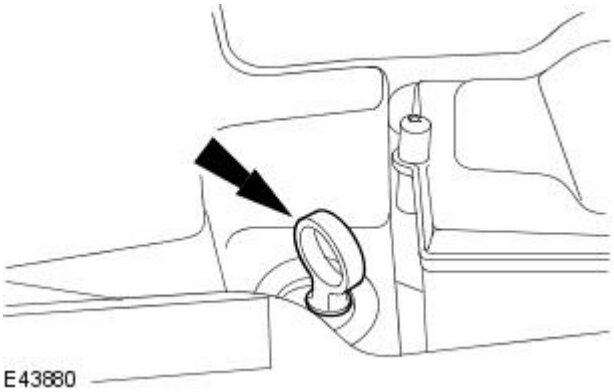

Published: 11-May-2011

Fuel Charging and Controls - 2.0L Duratorq-TDCi / 2.2L Duratorq-TDCi (110kW / 150PS) - Puma - Fuel Injector

Removal and Installation

Special Tool(s)	
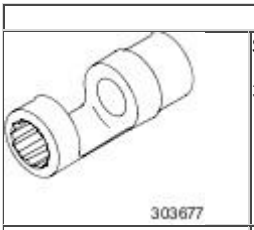	Socket, Fuel Injector Remover/Installer 303-677
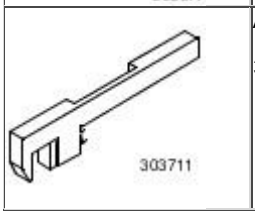	Aligner, Fuel Injector 303-711

General Equipment

Pneumatic vacuum gun

Removal

• WARNINGS:

Wait at least 15 minutes after the engine stops before commencing any repair to the high pressure fuel injection system. Failure to follow this instruction may result in personal injury.

Do not smoke or carry lighted tobacco or open flame of any type when working on or near any fuel related components. Highly flammable mixtures are always present and may ignite. Failure to follow these instructions may result in personal injury.

This procedure involves fuel handling. Be prepared for fuel spillage at all times and always observe fuel handling precautions. Failure to follow these instructions may result in personal injury.

Do not carry out any repairs to the fuel injection system with the engine running. The fuel pressure within the system can be as high as 1600 bar (23,206 lb/in²). Failure to follow this instruction may result in personal injury.

• CAUTIONS:

Make sure the workshop area in which the vehicle is being worked on is as clean and as dust free as possible. Foreign matter from work on clutches, brakes or from machining or welding operations can contaminate the fuel system and may result in later malfunction.

Always carry out the cleaning process before carrying out any repairs to the fuel injection system components. Failure to follow this instruction may result in foreign matter ingress to the fuel injection system.

Diesel fuel injection equipment is manufactured to very precise tolerances and fine clearances. It is therefore essential that absolute cleanliness is observed when working with these components. Always install blanking plugs to any open orifices or lines.

Do not disassemble the fuel injectors or clean the nozzles, even with an ultrasonic cleaner. Always install new fuel injectors when required.

• NOTE: If the fuel injection pump has suffered a major mechanical failure, new fuel injectors should also be installed.

• NOTE: **If the fuel injectors are being renewed in conjunction with the fuel injection pump and high-pressure fuel lines, SRO 195010 must be claimed.**

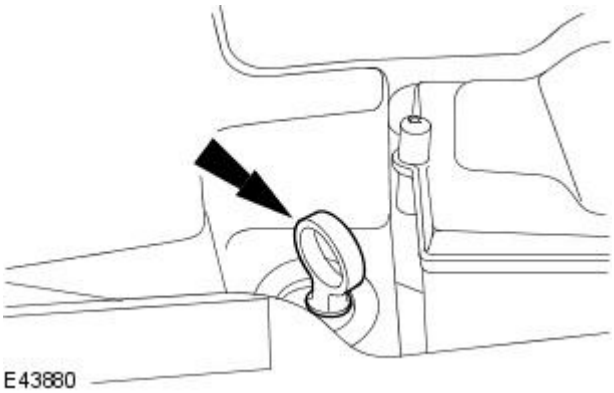

1. Remove the oil level indicator.

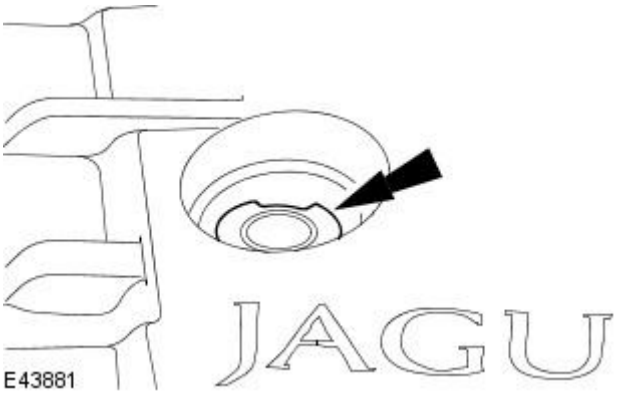

2. Remove the oil filler cap.

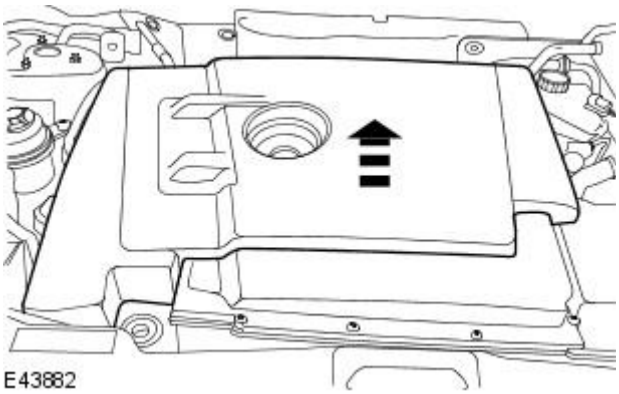

3. NOTE: Install the oil filler cap and oil level indicator to prevent foreign material entering the valve cover.

Remove the engine cover.

4. CAUTION: Protect the fuel injector electrical connectors with lint-free material to prevent contamination from the cleaning fluid.

Clean the fuel injector, high-pressure fuel supply line and surrounding areas.
For additional information, refer to: Fuel Injection Component Cleaning (303-04B Fuel Charging and Controls - 2.0L Duratorq-TDCi/2.2L Duratorq-TDCi (110kW/150PS) - Puma, General Procedures).

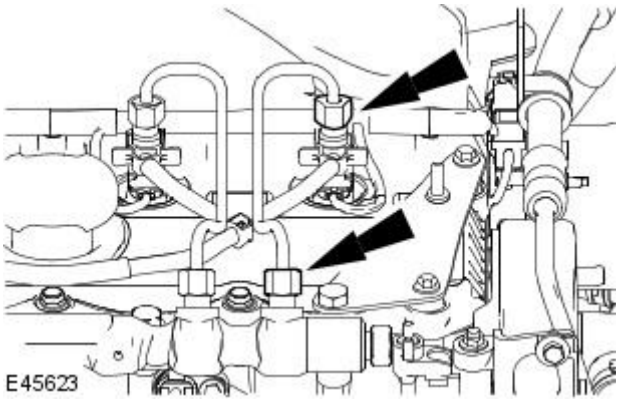

5. CAUTIONS:

Make sure that the high-pressure fuel supply line remains in contact with both the fuel injector and the fuel injection supply manifold until both unions have been detached and cleaned. Failure to follow this instruction may result in foreign matter ingress to the fuel injection system.

Make sure the tool used to loosen the high-pressure fuel supply line unions is used at the top of the unions as this is where there is most material. Failure to follow this instruction may result in damage to the unions.

Make sure that the fuel injector does not move when loosening the high-pressure fuel supply lines. Failure to follow this instruction will result in damage to the fuel injector and the fuel injector sealing washer.

Loosen the high-pressure fuel supply line from the fuel injector and fuel injection supply manifold.

6. CAUTION: Make sure that the high-pressure fuel supply line remains in contact with both the fuel injector and the fuel injection supply manifold until both unions have been detached and cleaned. Failure to follow this instruction may result in foreign matter ingress to the fuel injection system.

Using the pneumatic vacuum gun, vacuum foreign material from the high-pressure fuel supply line, the fuel injector and the fuel injection supply manifold.

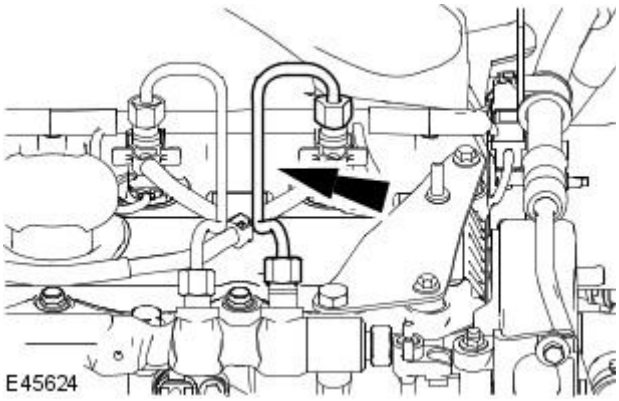

7. Remove and discard the high-pressure fuel supply line.

8. Using the pneumatic vacuum gun, vacuum foreign material from the fuel injector and the fuel injection supply manifold.

9. Install blanking caps to the open threaded ports on the fuel injector and the fuel injection supply manifold.

10. Disconnect the fuel return lines from the fuel injectors.

- Discard the fuel return line O-ring seals.

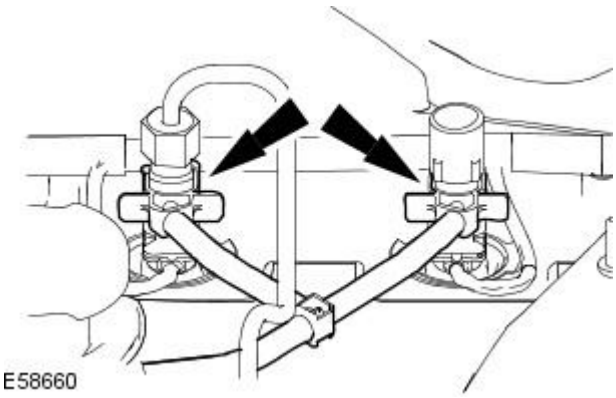

11. Disconnect the fuel injector electrical connector.

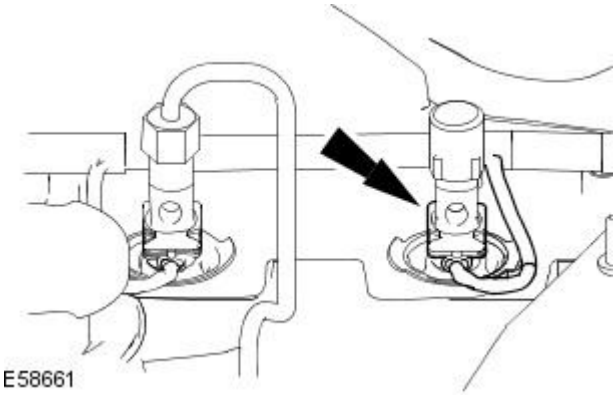

12. Remove the valve cover fuel injector seal.

- Discard the valve cover fuel injector seal.

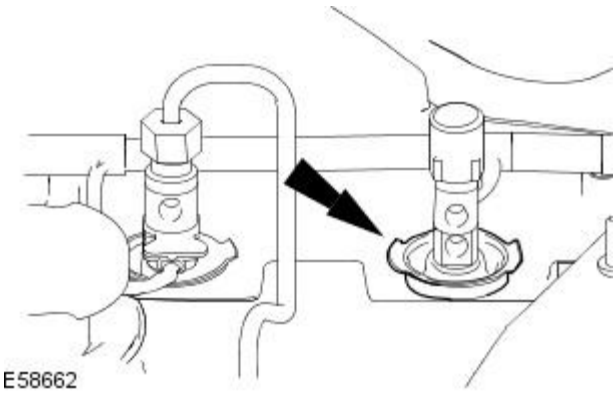

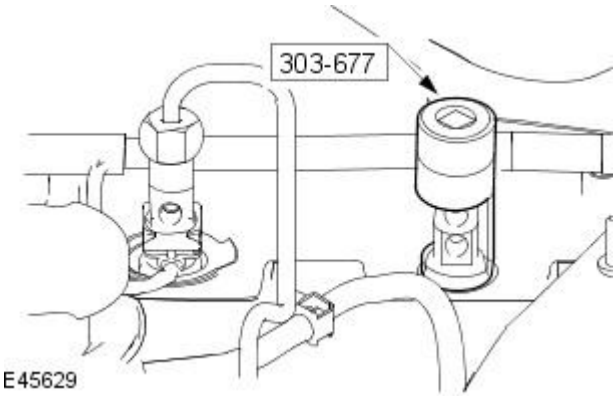

13. CAUTION: Make sure that the fuel injector does not move when loosening the fuel injector locking collar. Failure to follow this instruction will result in damage to the fuel injector and the fuel injector sealing washer.

Using the special tool, remove the fuel injector.

Installation

• WARNINGS:

Do not smoke or carry lighted tobacco or open flame of any type when working on or near any fuel related components. Highly flammable mixtures are always present and may ignite. Failure to follow these instructions may result in personal injury.

This procedure involves fuel handling. Be prepared for fuel spillage at all times and always observe fuel handling precautions. Failure to follow these instructions may result in personal injury.

• CAUTIONS:

Make sure the workshop area in which the vehicle is being worked on is as clean and as dust free as possible. Foreign matter from work on clutches, brakes or from machining or welding operations can contaminate the fuel system and may result in later malfunction.

Always carry out the cleaning process before carrying out any repairs to the fuel injection system components. Failure to follow this instruction may result in foreign matter ingress to the fuel injection system.

Diesel fuel injection equipment is manufactured to very precise tolerances and fine clearances. It is therefore essential that absolute cleanliness is observed when working with these components. Always install blanking plugs to any open orifices or lines.

Do not disassemble the fuel injectors or clean the nozzles, even with an ultrasonic cleaner. Always install new fuel injectors when required.

• NOTE: Install new high-pressure fuel supply lines.

• NOTE: Install a new valve cover fuel injector seal.

• NOTE: Install a new injector nut O-ring seal (if equipped).

• NOTE: Install new fuel return line O-ring seals.

1. Record the identification code from the new fuel injector to upload into the Jaguar approved diagnostic system during configuration (graphic shows an example of the identification code only).

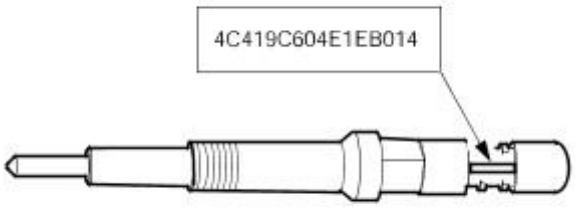

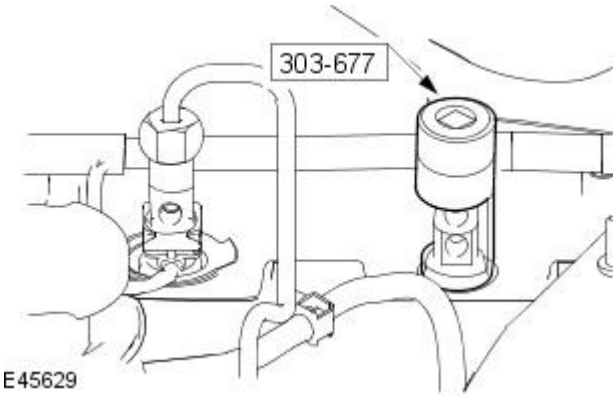

2. NOTE: Do not tighten the fuel injector locking collar at this stage.

Using the special tool, install the fuel injector.

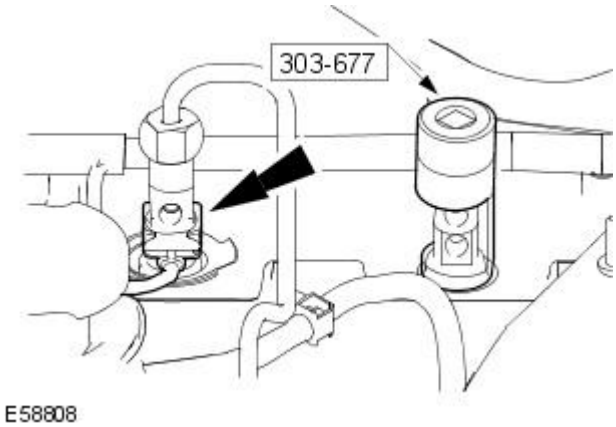

3. Disconnect the fuel injector electrical connector.

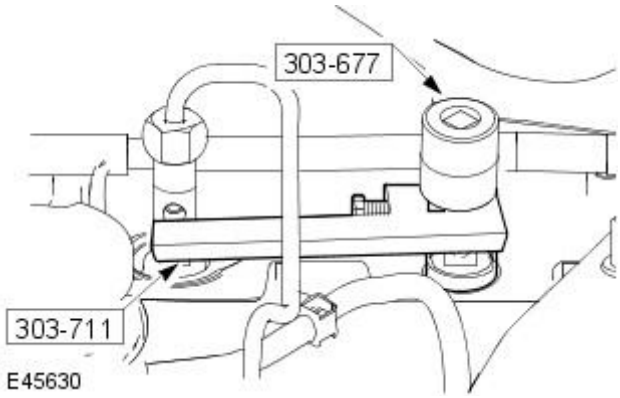

4. Using the special tools, tighten the fuel injector locking collar.

- Tighten to 47 Nm.

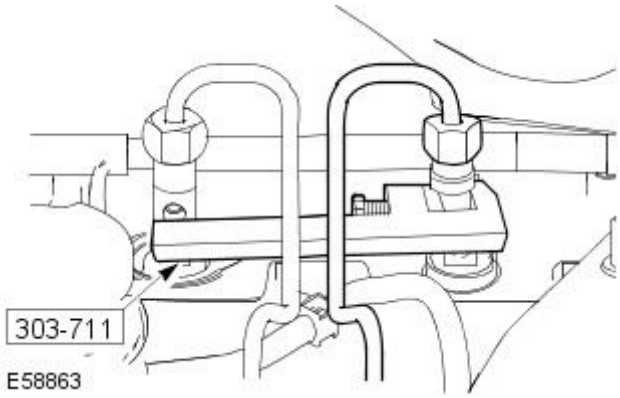

5. Remove the special tool.

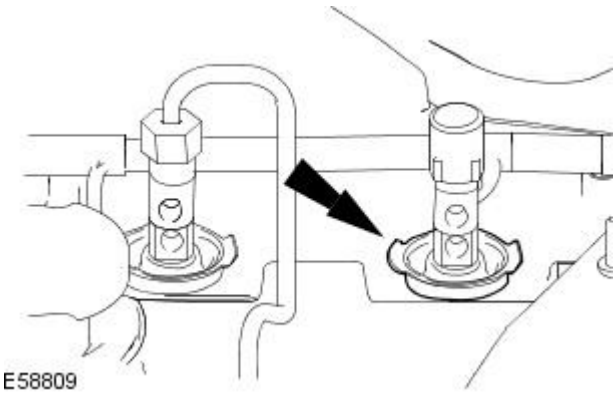

6. Install the valve cover fuel injector seal.

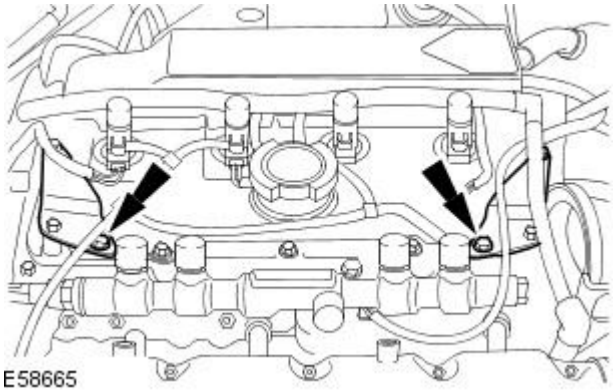

7. NOTE: High-pressure fuel supply lines shown removed for clarity.

Loosen the fuel injection supply manifold retaining bolts.

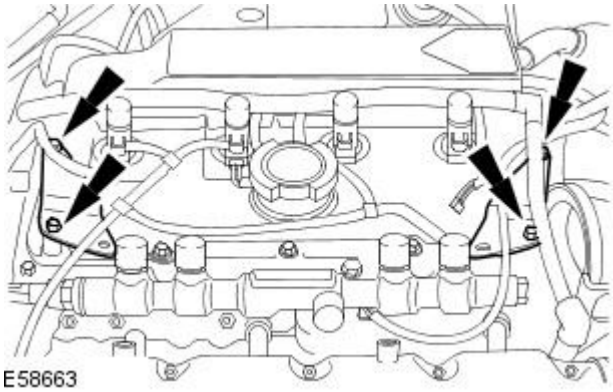

8. NOTE: High-pressure fuel supply lines shown removed for clarity.

Loosen the fuel injection supply manifold support brackets.

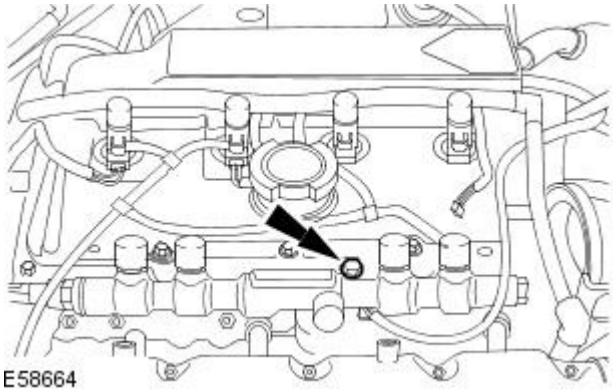

9. NOTE: High-pressure fuel supply lines shown removed for clarity.

Loosen the fuel injection supply manifold retaining bolt.

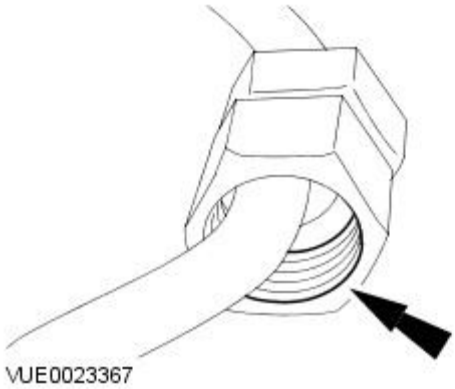

10. Using a suitable multipurpose lubricant spray, lubricate the high-pressure fuel supply line union threads.

11. CAUTION: Do not allow the unions to hit the olive ends of the high-pressure fuel supply line as this may damage the ends of the line and allow foreign matter to enter the fuel injection system.

• NOTE: The yellow colored collar is fitted at the fuel injector end and the blue colored collar is fitted at the fuel supply manifold end of the high-pressure fuel supply line.

• NOTE: To aid identification of the high-pressure fuel supply line, the union at the fuel injector end is etched with the cylinder number.

Position the high-pressure fuel supply line as near to the final installation position as possible and then remove and discard the blanking plugs from the high-pressure fuel supply line.

12. Remove the blanking plug from the fuel injector and the fuel injection supply manifold threaded port.

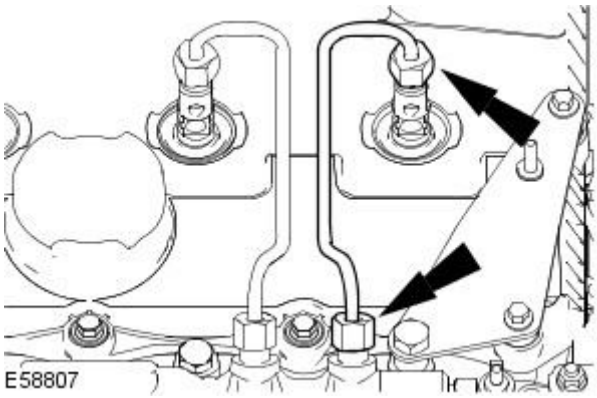

13. CAUTION: Maintain pressure on the high-pressure fuel supply line to keep the olives in contact with the fuel injectors and the fuel injection supply manifold cones while installing the unions.

• NOTE: Install the high-pressure fuel supply lines to the fuel injection supply manifold end first followed by the fuel injector end.

• NOTE: Do not tighten the high-pressure fuel supply line unions at this stage.

Install new high-pressure fuel supply line.

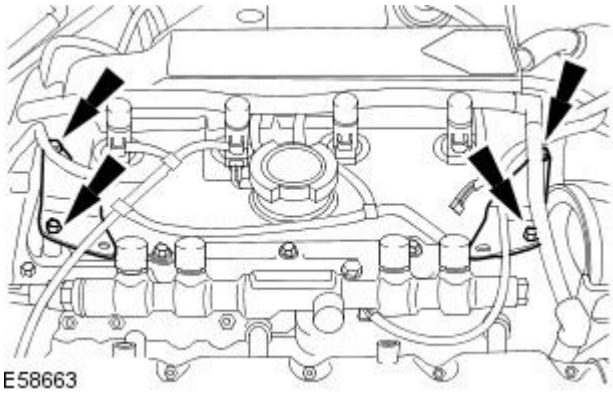

14. NOTE: High-pressure fuel supply lines shown removed for clarity.

Tighten the fuel injection supply manifold support brackets retaining bolts.

- Tighten to 14 Nm.

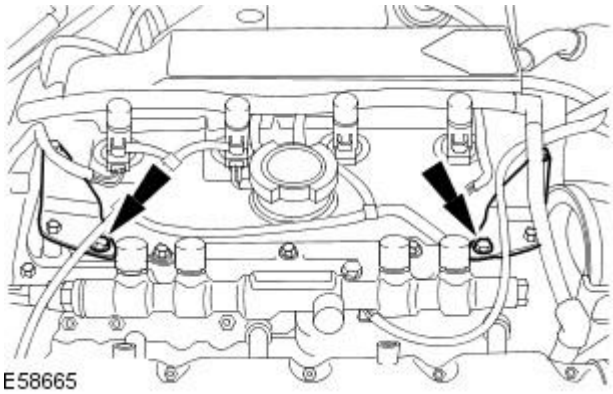

15. NOTE: High-pressure fuel supply lines shown removed for clarity.

Tighten the fuel injection supply manifold retaining bolts.

- Tighten to 23 Nm.

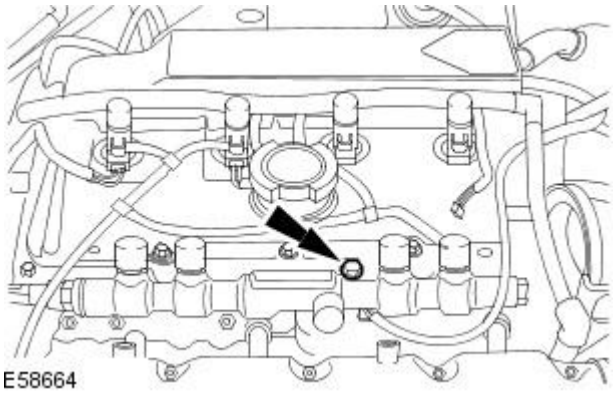

16. NOTE: High-pressure fuel supply lines shown removed for clarity.

Tighten the fuel injection supply manifold retaining bolt.

- Tighten to 23 Nm.

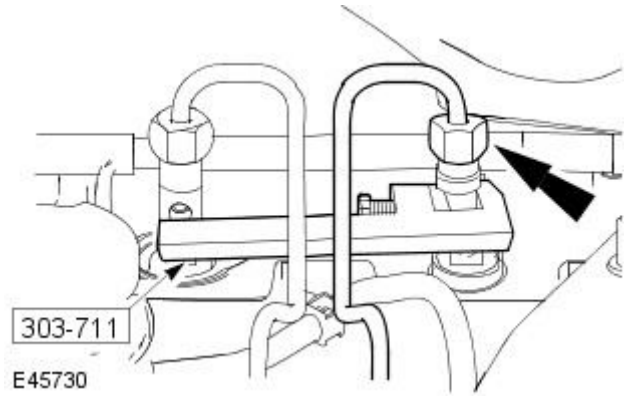

17. CAUTIONS:

Make sure the special tool is clamped around the fuel injector which is being tightened and is resting up against the adjacent fuel injector.

Make sure the tool used to tighten the high-pressure fuel supply line unions is used at the top of the union as this is where there is most material. Failure to follow this instruction may result in damage to the union.

Make sure that the fuel injector does not move when tightening the high-pressure fuel supply lines. Failure to follow this instruction will result in damage to the fuel injector and the fuel injector sealing washer.

Install the special tool and tighten the high-pressure fuel supply line

union at the fuel injector.

- Tighten to 40 Nm.

18. Remove the special tool.

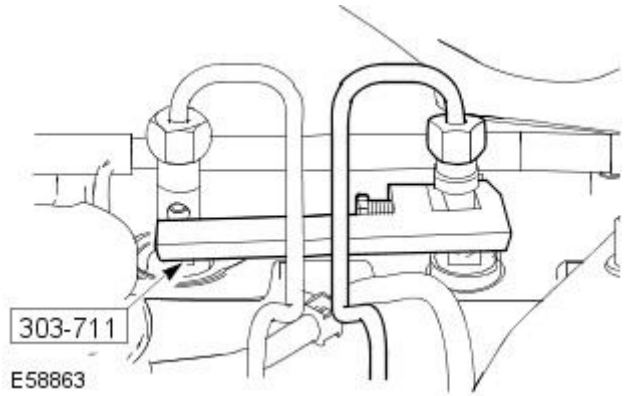

19. CAUTION: Make sure the tool used to tighten the high-pressure fuel supply line unions is used at the top of the union as this is where there is most material. Failure to follow this instruction may result in damage to the union.

Tighten the high-pressure fuel supply line union at the fuel injection supply manifold.

- Tighten to 40 Nm.

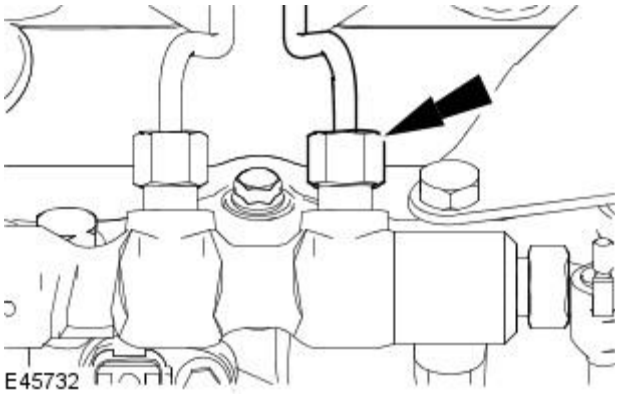

20. Connect the fuel injector electrical connectors.

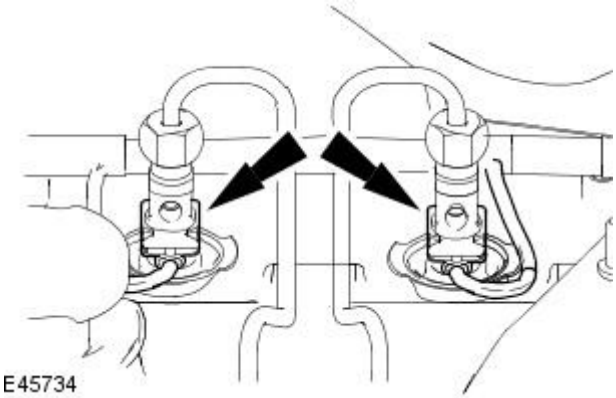

21. Connect the fuel return lines to the fuel injectors.

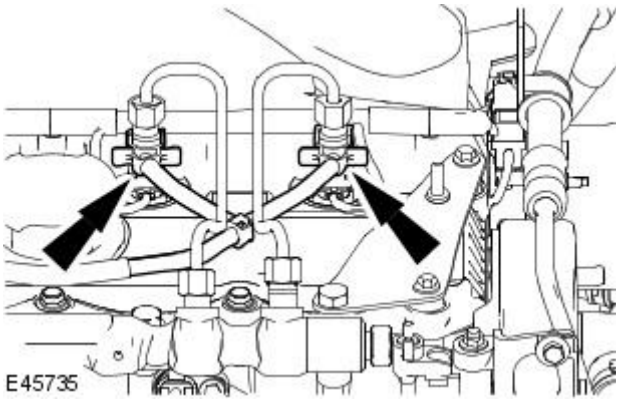

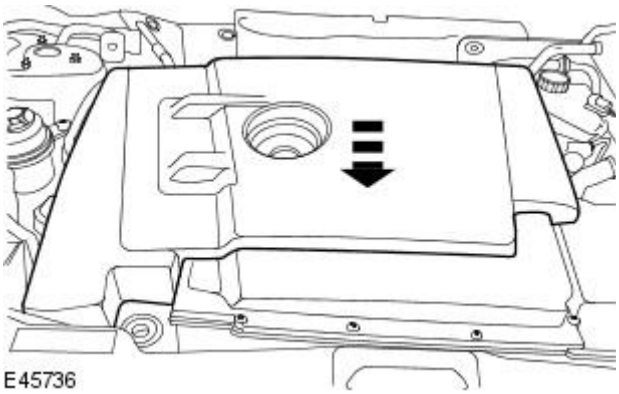

22. NOTE: Remove the oil filler cap and oil level indicator.

Install the engine cover.

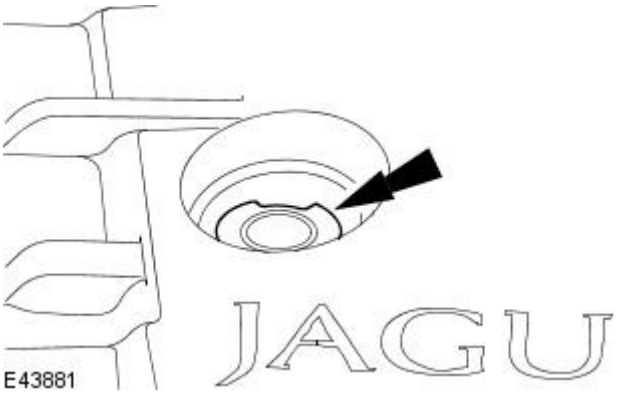

23. Install the oil filler cap.

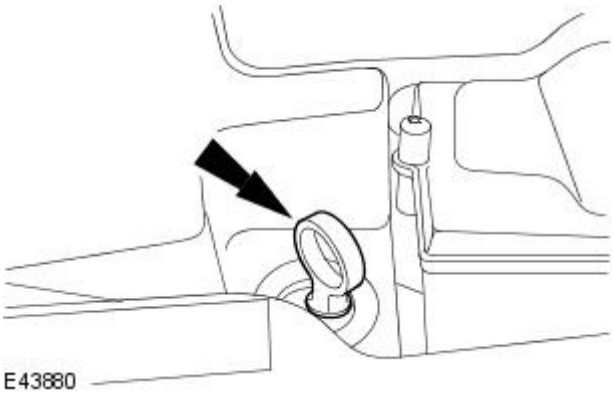

24. Install the oil level indicator.

25. Using the Jaguar approved diagnostic system, configure the new fuel injector to the engine control module (ECM).

Fuel Charging and Controls - 2.0L Duratorq-TDCi/2.2L Duratorq-TDCi (110kW/150PS) - Puma - Fuel Metering Valve

Removal and Installation

Removal

• WARNINGS:

Do not smoke or carry lighted tobacco or open flame of any type when working on or near any fuel related components. Highly flammable mixtures are always present and may ignite. Failure to follow these instructions may result in personal injury.

This procedure involves fuel handling. Be prepared for fuel spillage at all times and always observe fuel handling precautions. Failure to follow these instructions may result in personal injury.

The fuel system remains pressurized after the ignition is switched off. If communications with a suitable tester (able to read fuel rail pressure and temperature) can be established, wait until the tester indicates pressure of less than 20 bar (290 lb/in²), and temperature of less than 35 degrees C (95 degrees F) before working on the system. If communications with a suitable tester cannot be established, the fuel system must NOT be worked on for a period of fifteen minutes following the ignition being switched off. Failure to follow this instruction may result in personal injury.

If taken internally, **DO NOT** induce vomiting. Seek medical attention. Failure to follow this instruction may result in personal injury.

If fuel contacts the eyes, flush the eyes with cold water or eyewash solution and seek medical attention. Failure to follow this instruction may result in personal injury.

Wash hands thoroughly afer handling, as prolonged contact may cause irritation. Should irritation develop, seek medical attention. Failure to follow this instruction may result in personal injury.

• CAUTIONS:

Make sure the workshop area in which the vehicle is being worked on is as clean and as dust free as possible. Foreign matter from work on clutches, brakes or from machining or welding operations can contaminate the fuel system and may result in later malfunction.

Before disconnecting any part of the system, it is imperative that all dust, dirt and debris is removed from around components to prevent ingress of foreign matter in to the fuel system. Failure to follow this instruction may result in damage to the vehicle.

Diesel fuel injection equipment is manufactured to very precise tolerances and fine clearances. It is therefore essential that absolute cleanliness is observed when working with these components. Always install blanking plugs to any open orifices or lines.

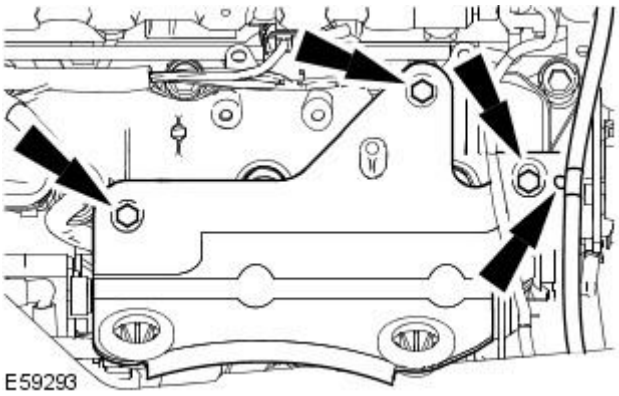

1. Remove the air cleaner assembly.
   For additional information, refer to: Air Cleaner (303-12B Intake Air Distribution and Filtering - 2.0L Duratorq-TDCi/2.2L Duratorq-TDCi (110kW/150PS) - Puma, Removal and Installation).
2. Remove the air cleaner mount bracket.
   - Detach the wiring harness.
   - Remove the air cleaner bracket retaining bolts.
3. CAUTION: Protect the fuel metering valve and fuel temperature sensor electrical connectors to prevent contamination with the cleaning fluid.

   Clean the fuel pump and surrounding areas.
   For additional information, refer to: Fuel Injection Component Cleaning (303-04B Fuel Charging and Controls - 2.0L Duratorq-TDCi/2.2L Duratorq-TDCi (110kW/150PS) - Puma, General Procedures).

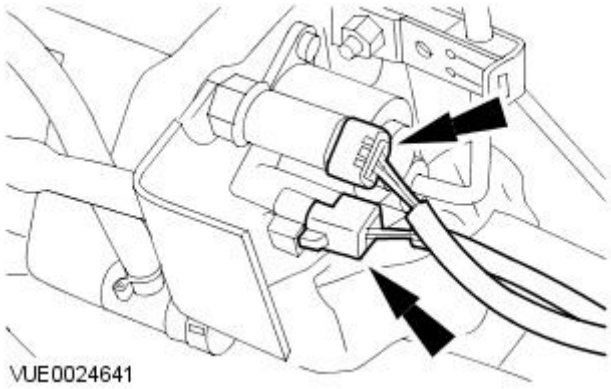

4. Disconnect the fuel metering valve and fuel temperature sensor electrical connectors.

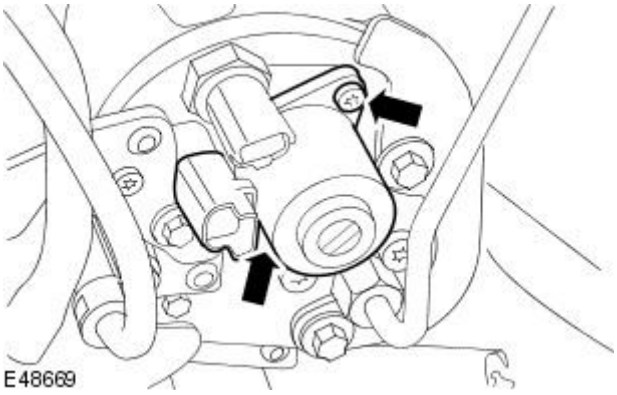

5. CAUTION: Always carry out the cleaning process before carrying out any repairs to the fuel injection system components. Failure to follow this instruction may result in foreign matter ingress to the fuel injection system.

Remove the fuel metering valve.

- Install a new blanking plug to the open port of the fuel pump.

Installation

• WARNINGS:

Do not smoke or carry lighted tobacco or open flame of any type when working on or near any fuel related components. Highly flammable mixtures are always present and may ignite. Failure to follow these instructions may result in personal injury.

This procedure involves fuel handling, Be prepared for fuel spillage at all times and always observe fuel handling precautions. Failure to follow these instructions may result in personal injury.

• CAUTIONS:

Diesel fuel injection equipment is manufactured to very precise tolerances and fine clearances. It is therefore essential that absolute cleanliness is observed when working with these components. Always install blanking plugs to any open orifices or lines.

Make sure the workshop area in which the vehicle is being worked on is as clean and dust free as possible. Foreign matter from work on clutches, brakes or from machining or welding operations can contaminate the fuel system and may result in later malfunction.

Always carry out the cleaning process before carrying out any repairs to the fuel injection system components. Failure to follow this instruction may result in foreign matter ingress to the fuel injection system.

Diesel fuel injection equipment is manufactured to very precise tolerances and fine clearances. It is therefore essential that absolute cleanliness is observed when working with these components. Always install blanking plugs to any open orifices or lines.

• NOTE: Install a new fuel metering valve and O-ring seal.

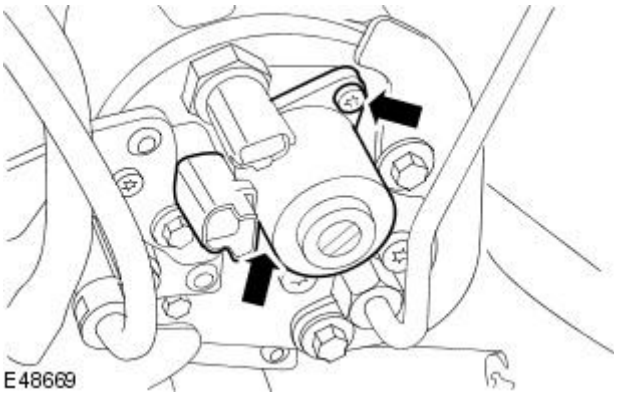

1. Remove and discard the blanking plug from the fuel pump.

2. Using a suitable multipurpose lubricant spray, lubricate the O-ring seal.

3. CAUTIONS:

The fuel metering valve must be installed correctly into the fuel pump so that the mating faces are in contact with each other. Failure to follow this instruction may result in damage to the fuel metering valve.

Always carry out the cleaning process before carrying out any repairs to the fuel injection system components. Failure to follow this instruction may result in foreign matter ingress to the fuel injection system.

Install the fuel metering valve and O-ring seal.

- Install the fuel metering valve retaining bolts finger tight.

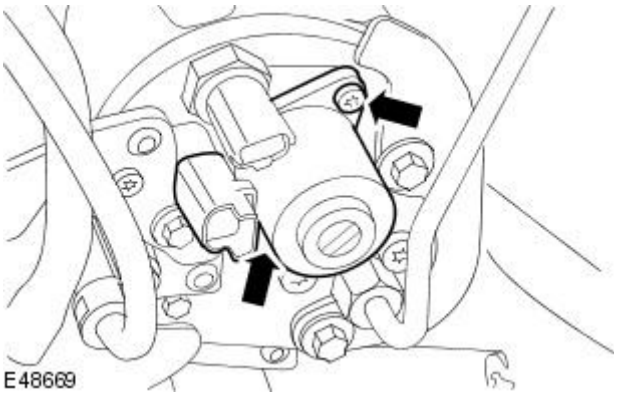

4. CAUTION: The fuel metering valve retaining bolts must be tightened in the following stages. Failure to follow this instruction may result in damage to the fuel metering valve.

Tighten the fuel metering valve retaining bolts in two stages.

- Stage 1: 2.5 Nm
- Stage 2: 5.5 Nm

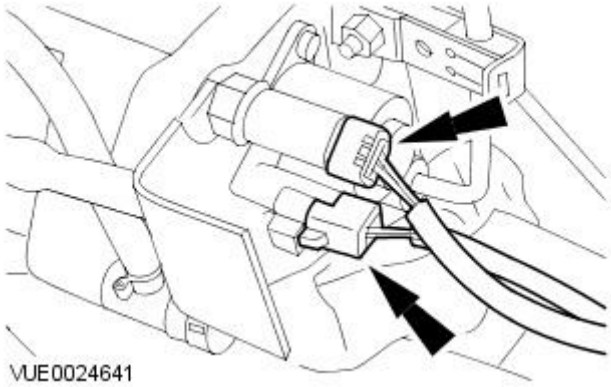

5. Connect the fuel metering valve and fuel temperature sensor electrical connectors.

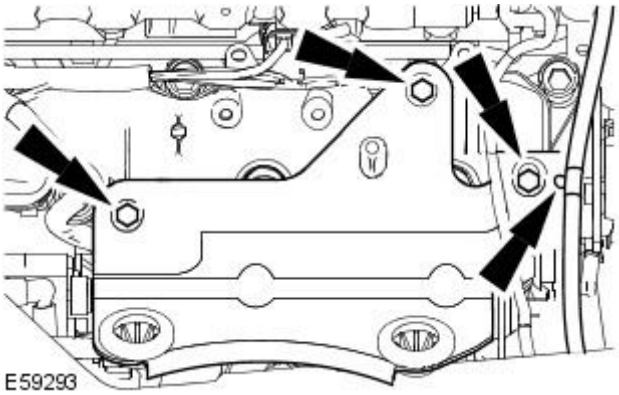

6. Install the air cleaner mount bracket.

- Tighten the retaining bolts.
- Attach the wiring harness.

7. Install the air cleaner.
For additional information, refer to: Air Cleaner (303-12B Intake Air Distribution and Filtering - 2.0L Duratorq-TDCi/2.2L Duratorq-TDCi (110kW/150PS) - Puma, Removal and Installation).

Published: 11-May-2011

Fuel Charging and Controls - 2.0L Duratorq-TDCi / 2.2L Duratorq-TDCi (110kW / 150PS) - Puma - Fuel Return Line Venturi

Removal and Installation

General Equipment

Pneumatic vacuum gun

Removal

1. WARNINGS:

Do not smoke or carry lighted tobacco or open flame of any type when working on or near any fuel related components. Highly flammable mixtures are always present and may ignite. Failure to follow these instructions may result in personal injury.

This procedure involves fuel handling. Be prepared for fuel spillage at all times and always observe fuel handling precautions. Failure to follow these instructions may result in personal injury.

• CAUTIONS:

Diesel fuel injection equipment is manufactured to very precise tolerances and fine clearances. It is therefore essential that absolute cleanliness is observed when working with these components. Always install blanking plugs to any open orifices or lines.

Always carry out the cleaning process before carrying out any repairs to the fuel injection system components. Failure to follow this instruction may result in foreign matter ingress to the fuel injection system.

Remove the air cleaner.
For additional information, refer to: Air Cleaner (303-12B Intake Air Distribution and Filtering - 2.0L Duratorq-TDCi/2.2L Duratorq-TDCi (110kW/150PS) - Puma, Removal and Installation).

2. Detach the engine wiring harness.

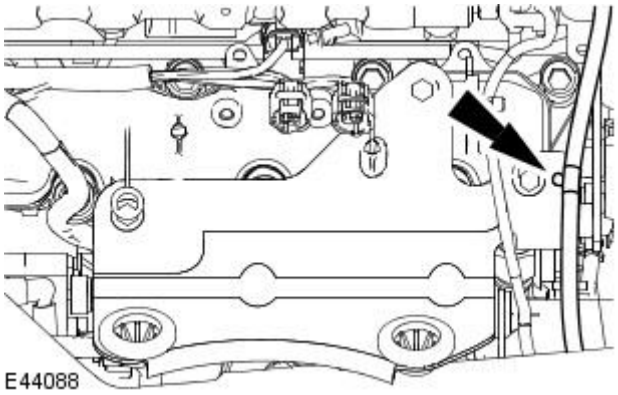

3. Remove the air cleaner mount bracket.

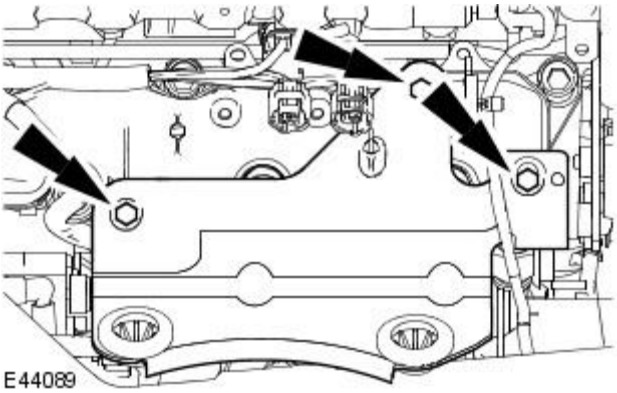

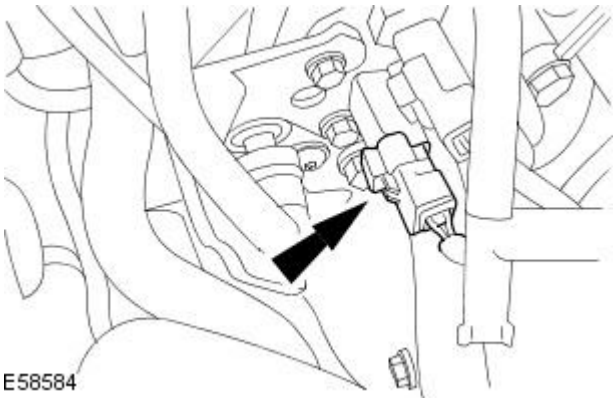

4. NOTE: Protect the fuel metering valve electrical connector with lint-free material to prevent contamination from the cleaning fluid.

Disconnect the fuel metering valve electrical connector.

5. Clean the fuel pump, fuel return lines and surrounding area.
For additional information, refer to: Fuel Injection Component Cleaning (303-04B Fuel Charging and Controls - 2.0L Duratorq-TDCi/2.2L Duratorq-TDCi (110kW/150PS) - Puma, General Procedures).

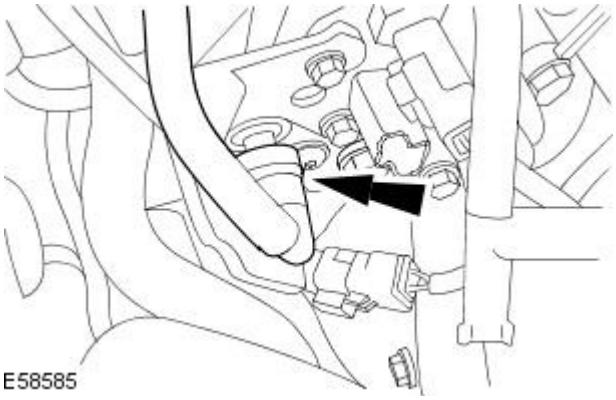

6. Disconnect the fuel filter return line from the fuel pump.
For additional information, refer to: Quick Release Coupling - Push Connect (310-00 Fuel System - General Information, General Procedures).

- Install blanking plugs to the open orifices.

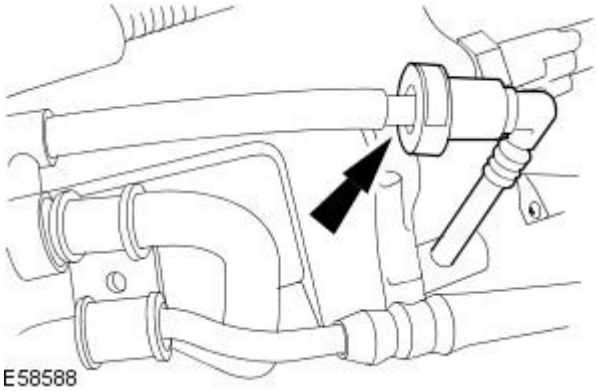

7. Disconnect the fuel injector to fuel pump return line.
For additional information, refer to: Quick Release Coupling - Push Connect (310-00 Fuel System - General Information, General Procedures).

- Install blanking plugs to the open orifices.

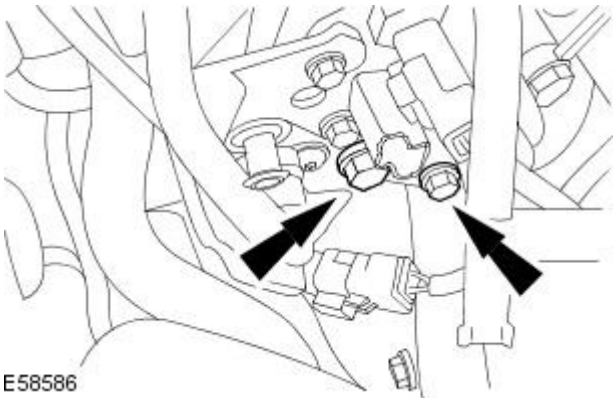

8. Remove the fuel pump shield lower retaining bolts.

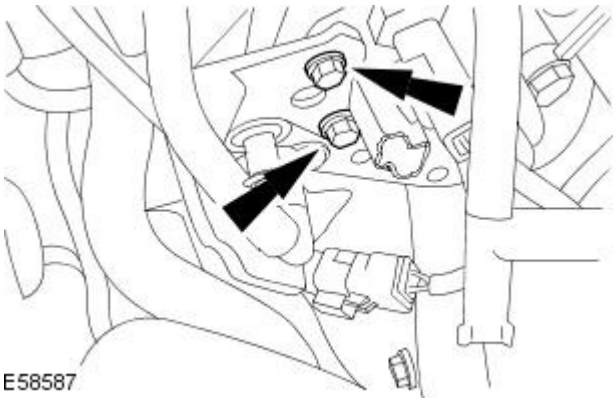

9. Remove the fuel pump shield upper retaining bolts.

10. Using the pneumatic vacuum gun, vacuum foreign material from the fuel pump, fuel return line venturi and the fuel pump fuel return lines.

11. Remove the fuel pump shield.

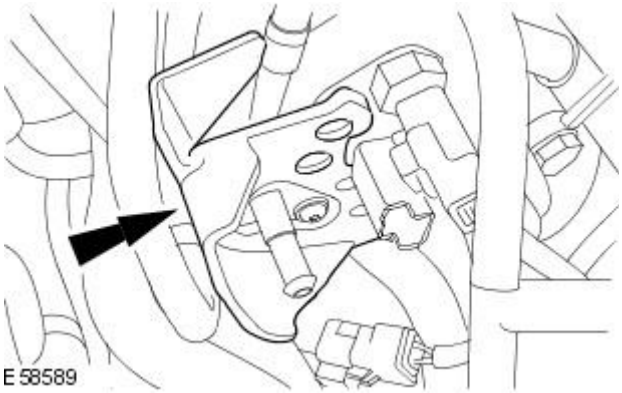

12. Remove the fuel return line venturi.

- Install a blanking plug to the open port on the fuel pump.

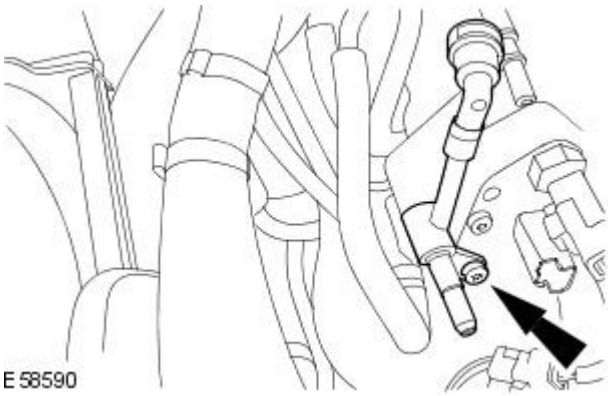

Installation

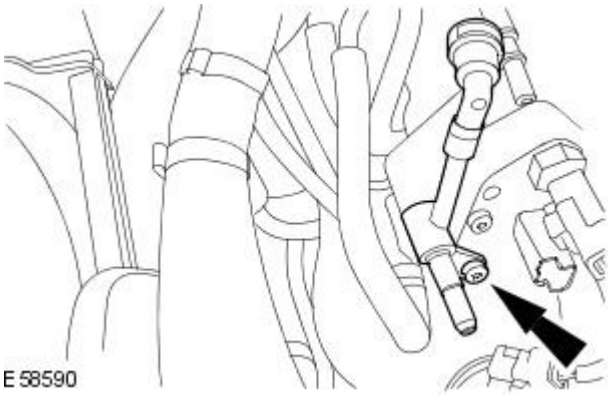

1. WARNINGS:

Do not smoke or carry lighted tobacco or open flame of any type when working on or near any fuel related components. Highly flammable mixtures are always present and may ignite. Failure to follow these instructions may result in personal injury.

This procedure involves fuel handling. Be prepared for fuel spillage at all times and always observe fuel handling precautions. Failure to follow these instructions may result in personal injury.

• CAUTIONS:

Diesel fuel injection equipment is manufactured to very precise tolerances and fine clearances. It is therefore essential that absolute cleanliness is observed when working with these components. Always install blanking plugs to any open orifices or lines.

Always carry out the cleaning process before carrying out any repairs to the fuel injection system components. Failure to follow this instruction may result in foreign matter ingress to the fuel injection system.

To install, reverse the removal procedure.

- Tighten to 6 Nm.

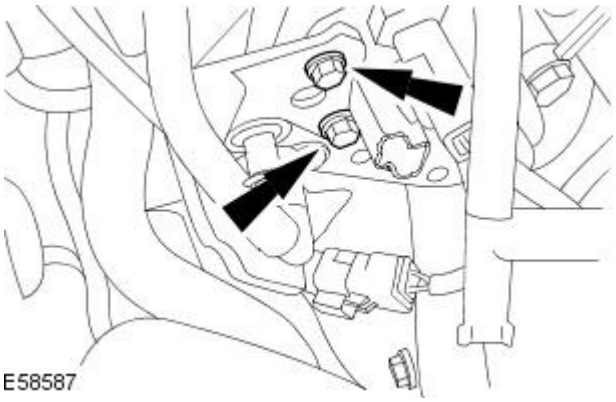

2. Tighten to 8 Nm.

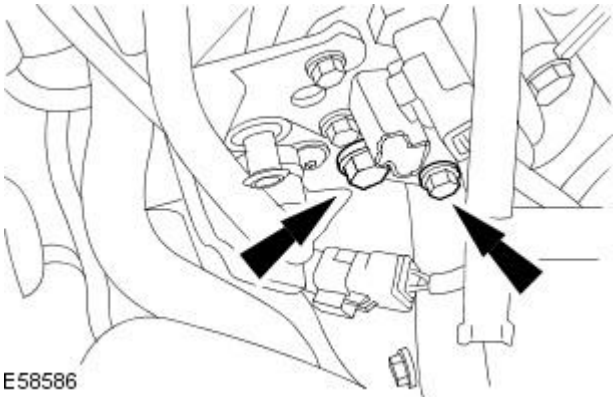

3. Tighten to 33 Nm.

Published: 11-May-2011

Fuel Charging and Controls - Turbocharger -

Torque Specifications

Description	Nm	lb-ft	lb-in
Oil supply tube union retaining bolt	14	10	-
Oil return tube to turbocharger retaining bolts	10	-	89
Oil return tube to cylinder block retaining bolt	10	-	89
Exhaust gas recirculation (EGR) cooler to exhaust manifold retaining bolt	37	27	-
EGR cooler mount bracket retaining nut	10	-	89
EGR cooler mount bracket retaining bolt	10	-	89
Exhaust manifold retaining nuts and bolts	40	30	-
Exhaust manifold gasket retaining bolts	10	-	89

Fuel Charging and Controls - Turbocharger - Turbocharger

Description and Operation

Variable vane turbocharger - Vehicles built up to VIN:E25781

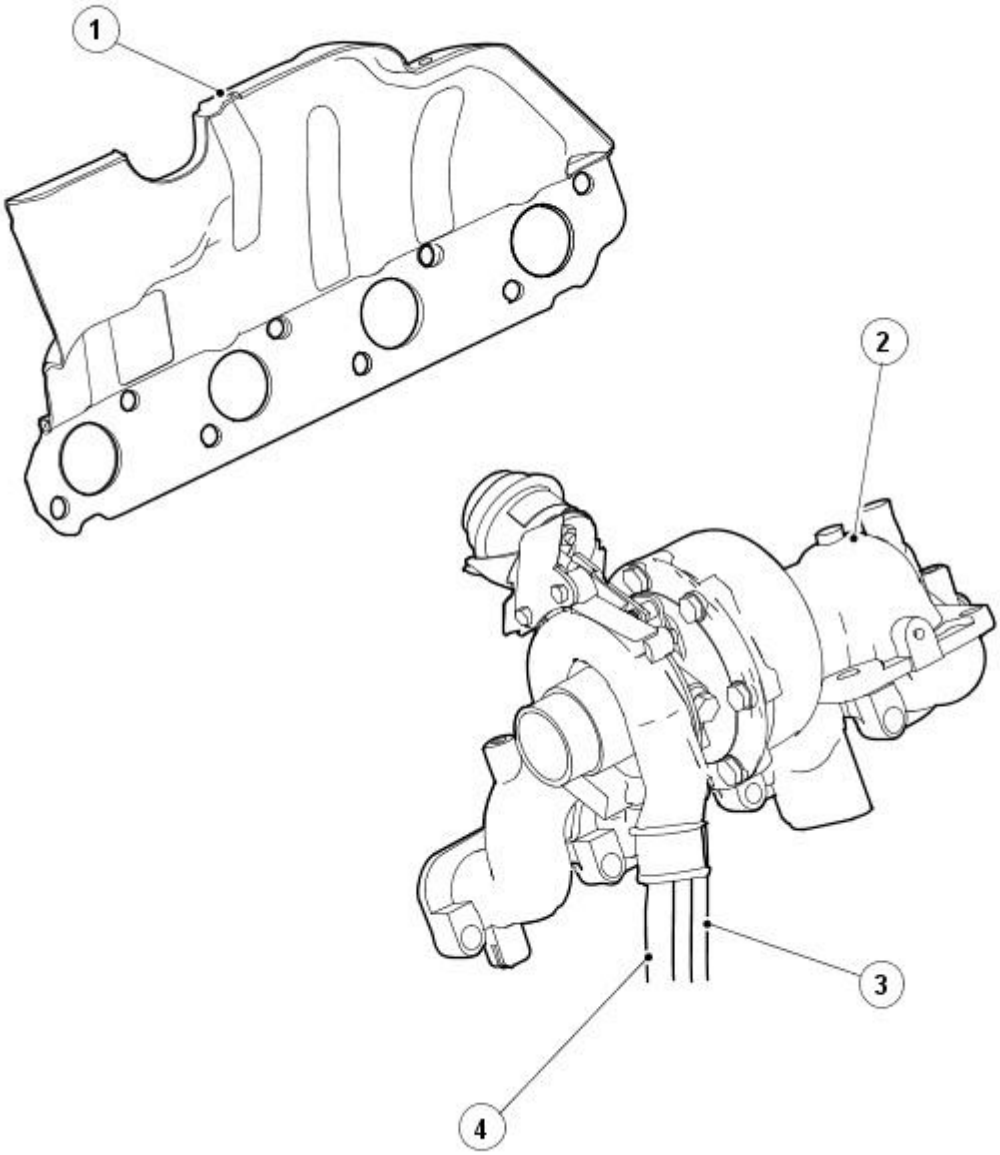

E44406

Item	Part Number	Description
1	-	Exhaust manifold gasket/heat shield
2	-	Turbocharger/exhaust manifold
3	-	Oil supply tube
4	-	Oil return tube

Variable vane turbocharger - Vehicles built from VIN:E25782

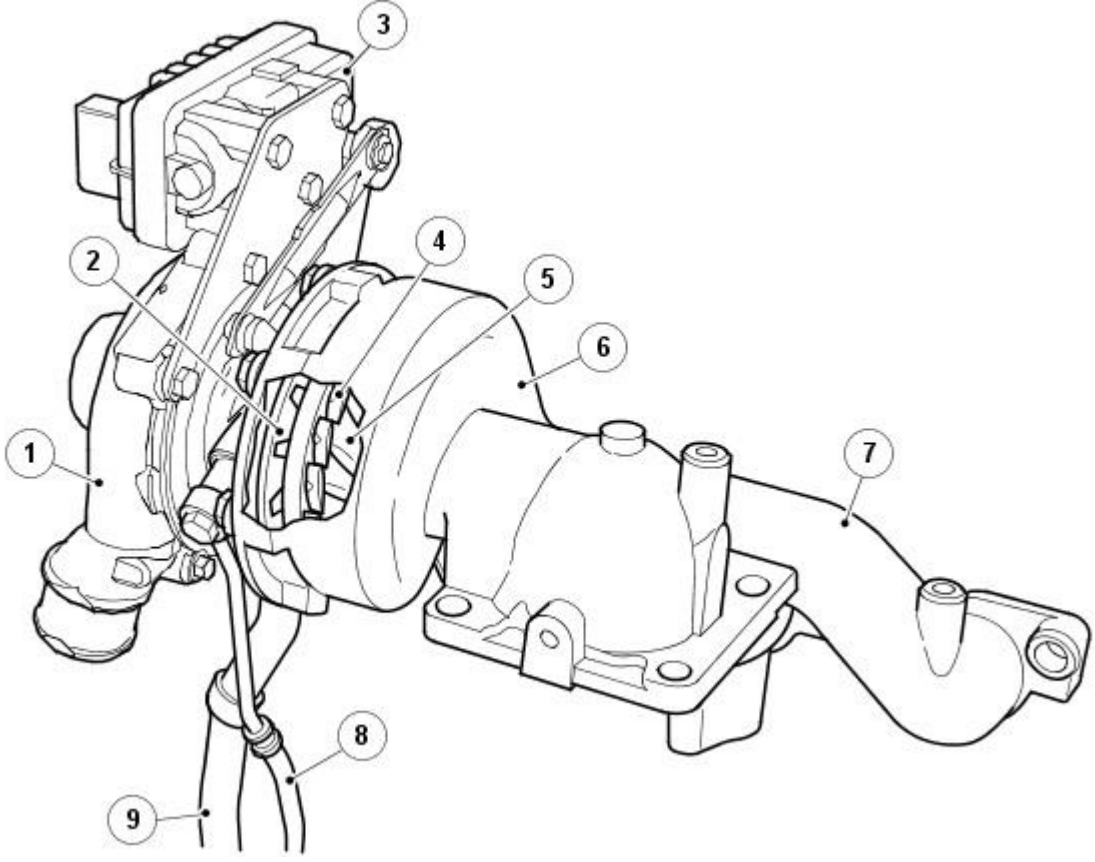

Item	Part Number	Description
1	-	Compressor casing
2	-	Variable vane adjustment ring
3	-	Rotary electronic actuator
4	-	Variable vane
5	-	Exhaust turbine
6	-	Turbine casing
7	-	Exhaust manifold
8	-	Oil supply line
9	-	Oil drain line

The turbocharger and exhaust manifold are a combined assembly and although it is possible to separate them, they are not supplied separately and should therefore not be disassembled.

The turbocharger consists of two elements, a turbine and a compressor both installed on a single shaft.

The turbocharger bearings are supplied with oil from the engine.

The turbine uses the flow of the exhaust gas to drive the compressor. The compressor draws air through the air cleaner and forces it into the intake manifold.

Principles of Operation - Variable vane turbocharger

The turbocharger is designed to improve engine induction and engine performance. The list below details the concerns relating to turbocharger performance.

- High engine speed produces excessive turbine speed and therefore creates excessive turbocharger boost pressure.
- Low engine speed does not produce sufficient turbine speed and therefore not enough turbocharger boost pressure is achieved.

The turbocharger does not have a wastegate control valve. Instead, it has variable turbocharger vanes which are located in the turbocharger turbine housing and directs the air flow into the turbocharger turbine. The turbocharger vanes act as the control for the turbocharger boost pressure.

The turbocharger produces its full turbocharger boost pressure over the entire engine speed range, not just at high engine speed. This is achieved through the adjustment of the vanes and the resulting change in the flow of the exhaust gas.

The speed of the exhaust gas flow within the turbocharger is increased independent of engine speed by varying the intake cross section in front of the turbocharger turbine. This is achieved by adjusting the angle of the vanes controlling the air flow into the turbocharger turbine and drives the turbocharger turbine faster. The higher turbocharger speed produces a high turbocharger boost pressure at all engine speeds.

The engine control module (ECM) controls the turbocharger vanes.

Regulation at Low Engine Speed

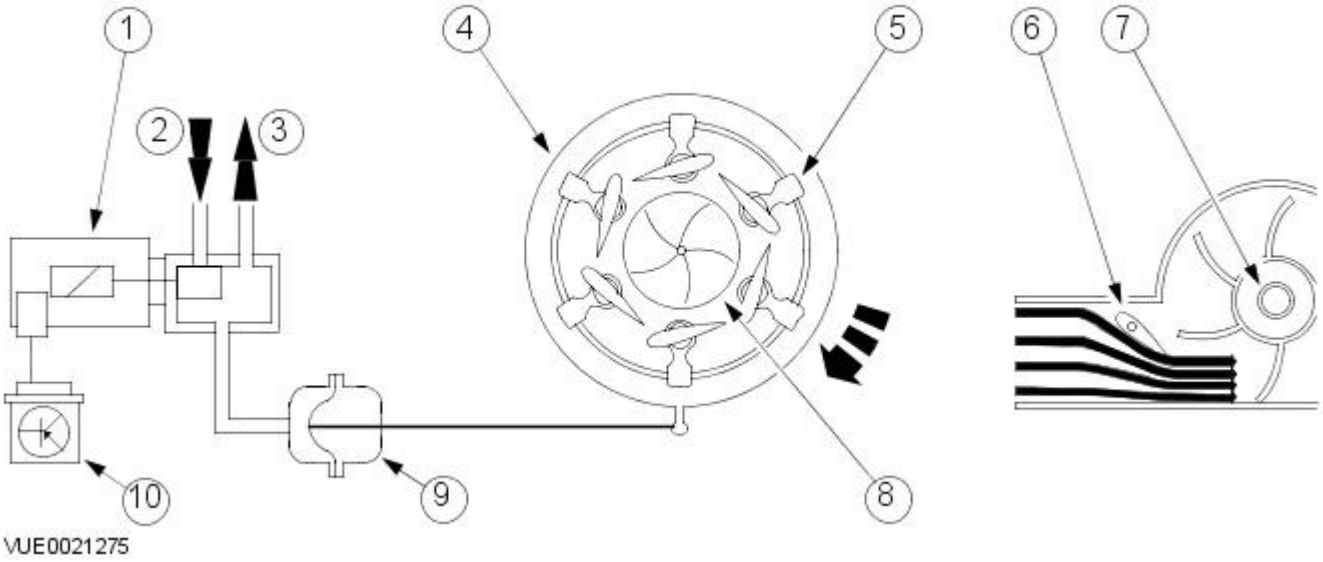

Item	Part Number	Description
1	-	Vane adjustment solenoid valve
2	-	Atmospheric pressure
3	-	Vacuum
4	-	Adjusting ring
5	-	Vanes
6	-	Vanes
7	-	Turbine
8	-	Turbine
9	-	Vacuum diaphragm unit
10	-	ECM

At low engine speeds the ECM actuates the vane adjustment solenoid valve to enable a vacuum to be applied. The vacuum diaphragm unit moves the adjusting ring so that the vanes are set at a shallow angle. The shallow intake cross section this creates for the stream of exhaust gas allows the turbocharger boost pressure to build up rapidly and easily at low engine speeds.

Regulation at Moderate Engine Speed

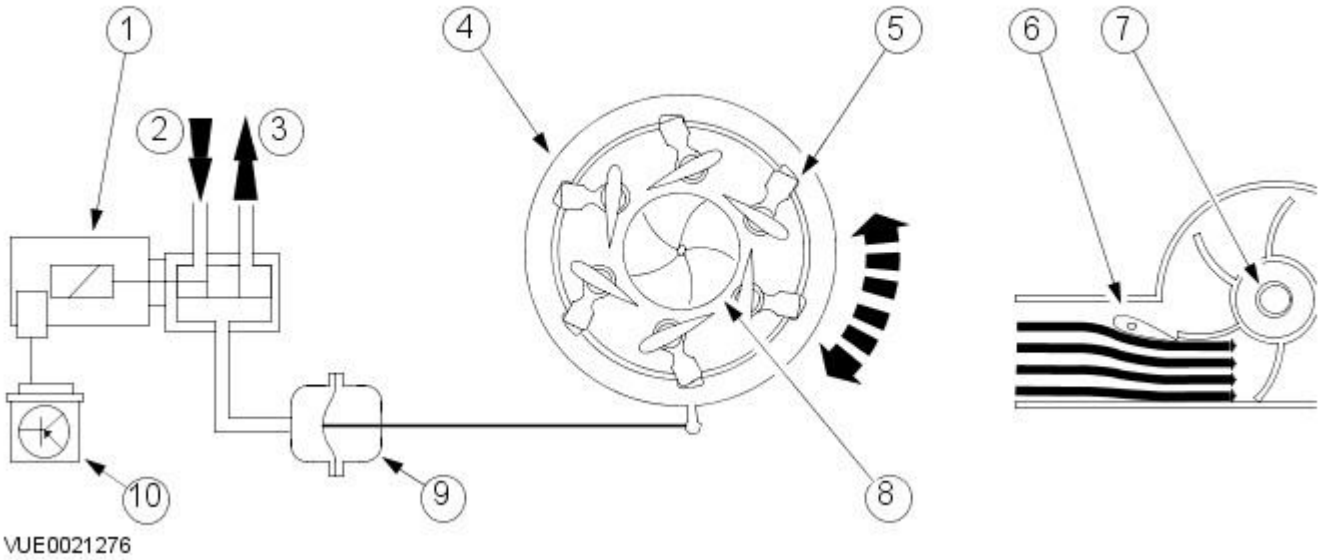

Item	Part Number	Description
1	-	Vane adjustment solenoid valve
2	-	Atmospheric pressure
3	-	Vacuum
4	-	Adjusting ring
5	-	Vanes
6	-	Vanes
7	-	Turbine
8	-	Turbine
9	-	Vacuum diaphragm unit
10	-	ECM

As the engine speed increases and the quantity of exhaust gas increases as a result, the vane adjustment solenoid valve adjusts the vacuum level within the vacuum diaphragm unit. The vacuum diaphragm unit moves the adjusting ring so that the vanes are set at a steeper angle. The steeper angle opens the intake cross section effectively reducing the gas flow and turbine speed while maintaining constant turbocharger boost pressure.

Regulation at Maximum Engine Speed

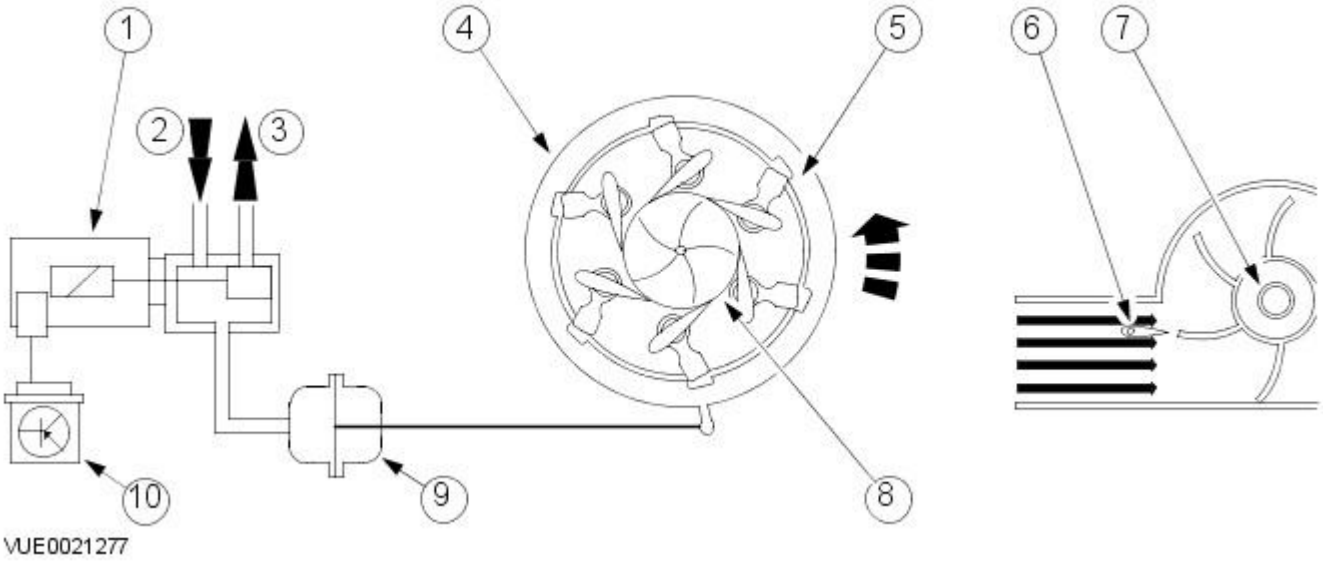

Item	Part Number	Description
1	-	Vane adjustment solenoid valve
2	-	Atmospheric pressure
3	-	Vacuum
4	-	Adjusting ring
5	-	Vanes
6	-	Vanes
7	-	Turbine
8	-	Turbine
9	-	Vacuum diaphragm unit
10	-	ECM

As the engine speed increases the intake cross section in front of the turbocharger turbine is continuously enlarged. The turbine speed and hence the quantity of the air supplied to the engine, is adjusted to suit the engine speed. This means that the turbocharger boost pressure remains optimized over all engine speeds.

The maximum position of the turbocharger vanes (maximum opening cross section) is also an emergency position, in the event of an electrical concern or leak in the vacuum system. This lowers the chance of engine damage due to excessive boost in the event of a turbocharger control concern.

Fuel Charging and Controls - Turbocharger - Turbocharger

Diagnosis and Testing

Overview

For information on the operation of the turbocharger:
REFER to: Turbocharger (303-04C Fuel Charging and Controls - Turbocharger, Description and Operation).

Inspection and Verification

• WARNINGS:

The following tests may involve working in close proximity to hot components. Make sure adequate protection is used. Failure to follow this instruction may result in personal injury.

The turbocharger can continue to rotate after the engine has stopped. Do not attempt to check the turbocharger until one minute has elapsed since the engine was switched off. Failure to follow this instruction may result in personal injury.

1. **1.** Verify the customer concern.
2. **2.** Visually inspect for obvious mechanical or electrical faults.

Visual inspection chart

Mechanical	Electrical
• Intake air system • Hose(s)/hose connections • Turbocharger • General engine condition.	• Circuit(s) • Electrical connections and harnesses • Manifold absolute pressure and temperature (MAPT) sensor • Turbocharger actuator • Engine control module (ECM)

Symptom chart

Symptom	Possible source	Action
Poor performance (off-boost)	• Low/Contaminated fuel • Restricted intake air system • General engine condition • Engine control module (ECM) failure	Check the fuel level and condition. Draw off approximately 1 ltr (2.11 pints) of fuel and allow to stand for 1 minute. Check to make sure there is no separation of the fuel indicating water or other liquid in the fuel. Check the intake air system for restriction. Check the engine condition, compressions, etc. if there are indications of a mechanical fault. Check for DTCs indicating a module fault. Refer to the warranty policy and procedures manual if a module is suspect.
No boost	• Electrical connections and harnesses • Restricted intake air system • Charge air cooler restricted/leaking • Turbocharger actuator failure • Turbocharger failure • Engine control module (ECM) failure	Check the electrical connections and harnesses. Check the intake air system for restriction/leakage. Check the turbocharger actuator and circuit. Refer to the electrical guides. Check the turbocharger for wear. Disconnect the turbocharger intake and outlet pipework and turn the turbocharger by hand. Any roughness indicates a fault. Check any up and down movement in the turbocharger shaft. Excessive movement indicates a fault. If in doubt, compare the suspect unit with a new turbocharger. Check for DTCs indicating an actuator or module fault. Refer to the warranty policy and procedures manual if a module is suspect.
No boost/excessive noise	• Turbocharger failure	Disconnect the turbocharger intake and outlet pipework and turn the turbocharger by hand. Any roughness indicates a fault. Check any up and down movement in the turbocharger shaft. Excessive movement indicates a fault. If in doubt, compare the suspect unit with a new turbocharger.

For a complete list of all diagnostic trouble codes that could be logged on this vehicle. REFER to: Electronic Engine Controls (303-14B Electronic Engine Controls - 2.0L Duratorq-TDCi/2.2L Duratorq-TDCi (110kW/150PS) - Puma, Diagnosis and Testing).

Diagnostic Trouble Codes (DTC) Relating to Turbocharger Issues

DTC	Description
P2263	Turbocharger/Supercharger Boost System Performance
.	This vehicle may not feature all of the components listed.
.	This DTC may be caused by:
.	Damaged or disconnected vacuum hose. Check for air leaks at turbocharger. Vanes on the turbocharger sticking closed. Turbocharger defective.
.	Or
.	Fault reported by the rotary electronic actuator.
.	This DTC may be caused by:
.	CAN communication BUS fault. Rotary electric actuator. Low battery voltage. Turbocharger defective.
P132A	Turbocharger/Supercharger Boost Control A Electrical
.	Fault reported by the rotary electronic actuator.
.	This DTC may be caused by:
.	Rotary electric actuator. Renew the variable geometry turbocharger.
P132B	Turbocharger/Supercharger Boost Control A Performance
.	Fault reported by the rotary electronic actuator.
.	This DTC may be caused by:
.	Faulty turbocharger, mechanism may be sticking.
.	Rotary electric actuator. Renew the variable geometry turbocharger.
P132C	Turbocharger/Supercharger Boost Control A Voltage
.	Fault reported by the rotary electronic actuator.

DTC	Description
.	This DTC may be caused by:
.	Low battery voltage. Check the condition of the battery. Check the wiring and the appropriate fuse. High battery voltage. Check the battery charging system.
P138D	Turbocharger/Supercharger Boost Control A Temperature Too High
.	Fault reported by the rotary electronic actuator.
.	This DTC may be caused by:
.	Leaking exhaust system. Engine overheat condition.
.	Rotary electric actuator. Renew the variable geometry turbocharger.
P179A	CAN Engine Control Module (ECM)/Turbocharger Boost Control A Actuator Circuit Malfunction
.	Fault reported by the rotary electronic actuator or powertrain control module (PCM).
.	This DTC may be caused by:
.	Controller area network (CAN) communication BUS fault. Check CAN wiring/CAN Network is functioning. If CAN wiring/CAN Network is functioning but the vehicle has loss of power, then renew the variable geometry turbocharger.

Diagnostic Procedure

Log any concerns raised by the customer regarding the fault with the vehicle – Discuss with workshop supervisor/receptionist

Check logged DTC - Rectify concern

Check the vehicle Integrated Diagnostic System (IDS) DVD patch file calibration – Update to the latest level

Quick Check List
Listen for unusual mechanical noise and watch for vibration
Listen for a high pitched noise (it can indicate air or gas leaks)
Listen for noise level cycling. It can indicate a restriction in the air cleaner or ducting
Inspect for missing or loose nuts, bolts, clamps and washers
Inspect for loose or damaged intake and exhaust manifolds and their ducting and clamps
Inspect for damaged or restricted oil supply and drain lines
Inspect for cracked or deteriorating turbocharger housings
Inspect for external oil leakage; external deposits (indicates air, oil, exhaust or coolant leakage)
Inspect for a restricted air filter
Check the turbocharger variable vane actuator arm for normal operation, free movement and damage

Point Health Check:

- 1. **Turbocharger Data Plate:**
  - 1. Check the turbocharger data stamped on the compressor housing. Record assembly number, serial number and turbocharger type
  - 2. Ensure turbocharger type and assembly number are correct for the engine application

- 2. **Compressor / Turbine Wheel (Turbocharger System Trouble Shooting):**
  -

  WARNING: Ensure wheels have stopped rotating before handling

  CAUTION: Never attempt to straighten blades. If any bent blades are detected replace the turbocharger

  • NOTE: Root cause of failure should be identified to eliminate repeat failure. Please make reference to section 'Turbocharger Trouble Shooting'

  1. Check for cracked/bent or damaged compressor (impeller) blades - Replace turbocharger if damaged
  - 2. Check for cracked/bent or damaged turbine blades - Replace turbocharger if damaged

- 3. **Compressor / Turbine Housing:**
  -
  • NOTE: Removal of the compressor or turbine housings will invalidate the Warranty

  1. Check for foreign objects, damage, or for excessive oil at the compressor housing air inlet and outlet
  - 2. Check for foreign objects, damage, or for excessive oil at the turbine housing exhaust inlet and outlet

- 4. **Turbocharger Bearing Clearances:**
  -
  • NOTE: If there is contact between compressor/turbine wheel and housing - Replace the turbocharger

  1. Gently rotate the compressor wheel and check for smooth operation
  - 2. Gently hold to one side and rotate the compressor wheel and check for smooth operation

- 5. **Bearing Housing:**
  -
  • NOTE: Removal of the compressor or turbine housings will invalidate the Warranty

  1. Check oil feed and drain port for loose fasteners, adapters or damage to flanges, housing faces or threads which may cause leakage
  - 2. Check for loose or broken turbine and compressor housing fasteners. If mounting flanges are damaged, replace or tighten (torque to manufacturer's specification)

Point Health Check:

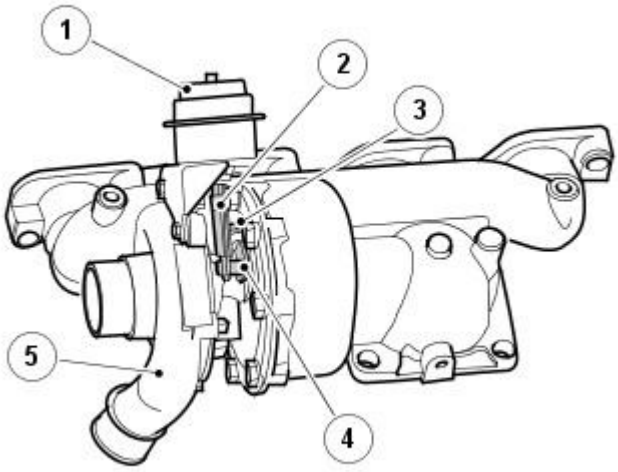

E88405

- 6. **Check for loose or broken turbine and compressor housing fasteners. If mounting flanges are damaged, replace or tighten (torque to manufacturer's specification):**
- **Legend**
  - 1. Boost pressure actuator
  - 2. Actuator arm
  - 3. Low flow adjusting screw
  - 4. Actuator heel
  - 5. Compressor casing

- 7. **Stage 3: Vacuum Actuation:**
  - 1. Check for correct installation of boost pressure actuator and check for loose bolts etc. If unsure, check and compare with another vehicle
  - 2. Check for DTCs and rectify fault before moving to next step
  -
  • NOTE: If the actuator arm is stuck in the open vane position, check solenoid for correct operation

  3. Check/observe actuator arm movement during key ON/OFF calibration
  - 3. Start Engine and allow to idle: Actuator (2) will retract under smooth operation and rest on the low flow adjuster screw at idle (3) – Turbocharger vanes closed
  - 4. Key off: Actuator will retract to the fully open position – Turbocharger vanes fully open
  - 5. If the above is not observed, check vacuum supply to boost pressure actuator (1)
  - **Check system: Utilizing Vacuum Gauge**
  - 6. Remove hose from actuator and apply a clean regulated vacuum of 47cmHg to the actuator (using a suitable hand-held vacuum pump) - check for smooth actuator movement, and that the actuator heel rests on the low-flow adjusting screw
  - 7. The boost pressure actuator (1) should hold a vacuum of 47cmHg for 20 seconds; if not, replace the turbocharger
  - 8. Release the vacuum from regulator, and the actuator should snap open under the boost pressure actuator spring force (default fully opens the vanes). If not, replace turbocharger

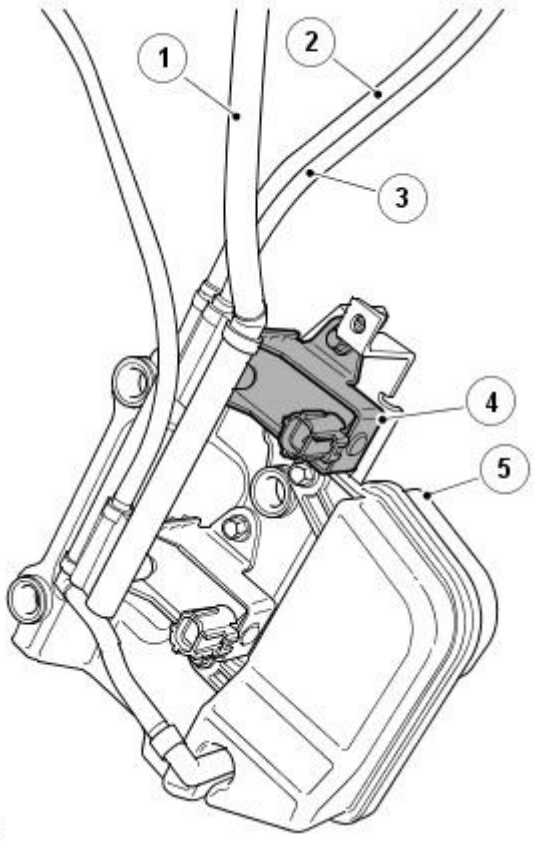

E88404

Point Health Check:

- 8. **Check Vacuum supply system:**
- **Legend**
  - 1. Atmospheric pipe from air cleaner
  - 2. Vacuum from brake booster
  - 3. Vacuum to VGT actuator
  - 4. Turbo charger solenoid valve
  - 5. Vacuum reservoir

- WARNING: Keep hands away from rod and mechanism. Finger injury may result from sudden movement of the assembly when the air pressure is applied

  9. **Connect a vacuum gauge to the pipe from the vacuum reservoir / solenoid valve:**
  - 1. Start engine and allow to idle; the vacuum should read 47 cmHg. If not, check vacuum system for leaks, faulty solenoid and check wiring integrity from the ECM to the solenoid (solenoid located on the side of the transmission)

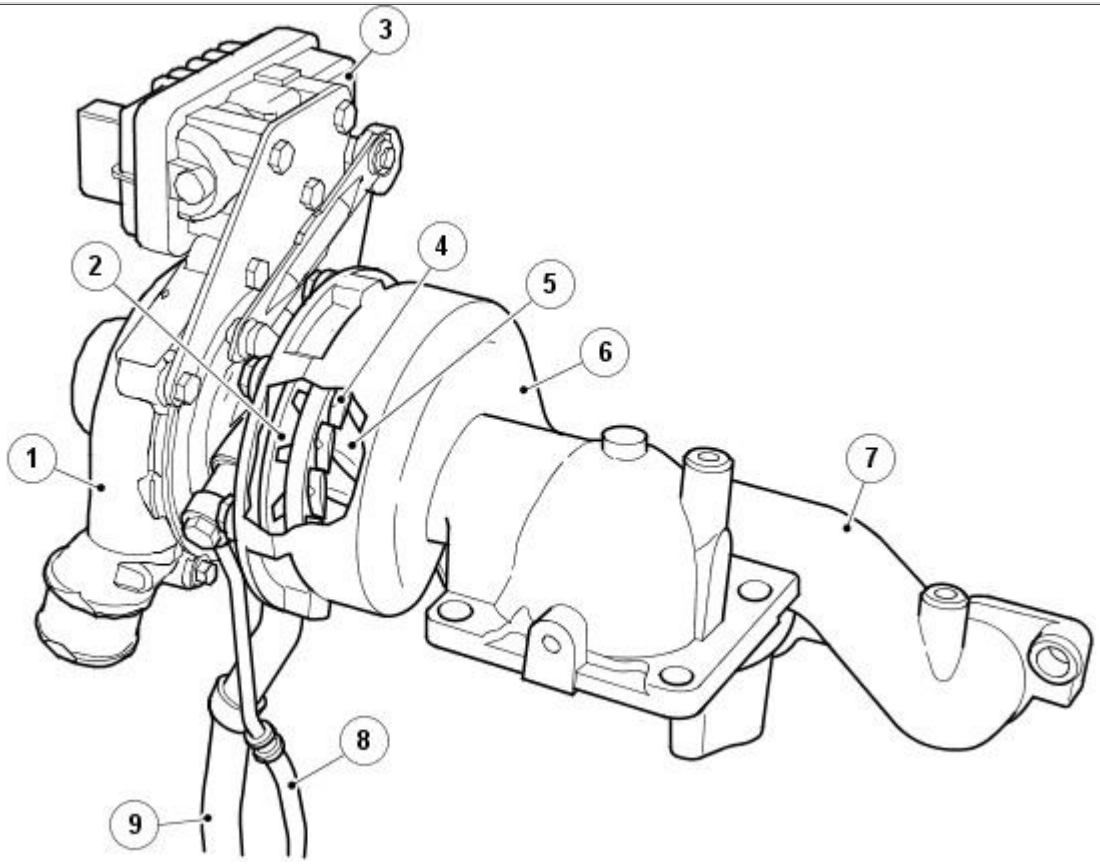

E67499

- 10. **Components:**
- **Legend**
  - 1. Compressor casing
  - 2. Variable vane adjustment ring
  - 3. Rotary electronic actuator
  - 4. Variable vane
  - 5. Exhaust turbine
  - 6. Turbine casing
  - 7. Exhaust manifold
  - 8. Oil supply line
  - 9. Oil drain line

- 11. **Stage 4 (2L): Rotary Electronic Actuator**
  - 1. Check for correct installation of the rotary electronic actuator, and check for loose bolts etc
  - 2. Check for DTCs and rectify fault before moving to next step
  - 3. Check for DTCs pertaining to a turbocharger fault
  -

  • NOTE: If actuator sticks when extending during start up and idle – Check REA Wiring integrity, Recheck DTCs if all OK replace Turbocharger. If actuator sticks when retracting during key OFF– Check REA wiring integrity, recheck DTCs if all OK replace Turbocharger

  4. Check actuator arm movement during key ON/OFF calibration. The actuator should extend during start up and idle, and retract when the engine is switched OFF - There should be a DTC logged to cover this situation - Check wiring integrity, if OK, replace Turbocharger

Turbocharger Troubleshooting Guide

- Frequently, fully serviceable turbo chargers are replaced due to mis-diagnosis of a problem
- Before replacing a turbocharger it is important to identify the cause of the problem
- The following troubleshooting guide will determine turbocharger condition and prevent the unnecessary removal, mis-diagnosis and repeat failures of the turbocharger unit
- Familiarize yourself with the intake air system and the turbocharger boost circuit

Turbocharger Troubleshooting Guide

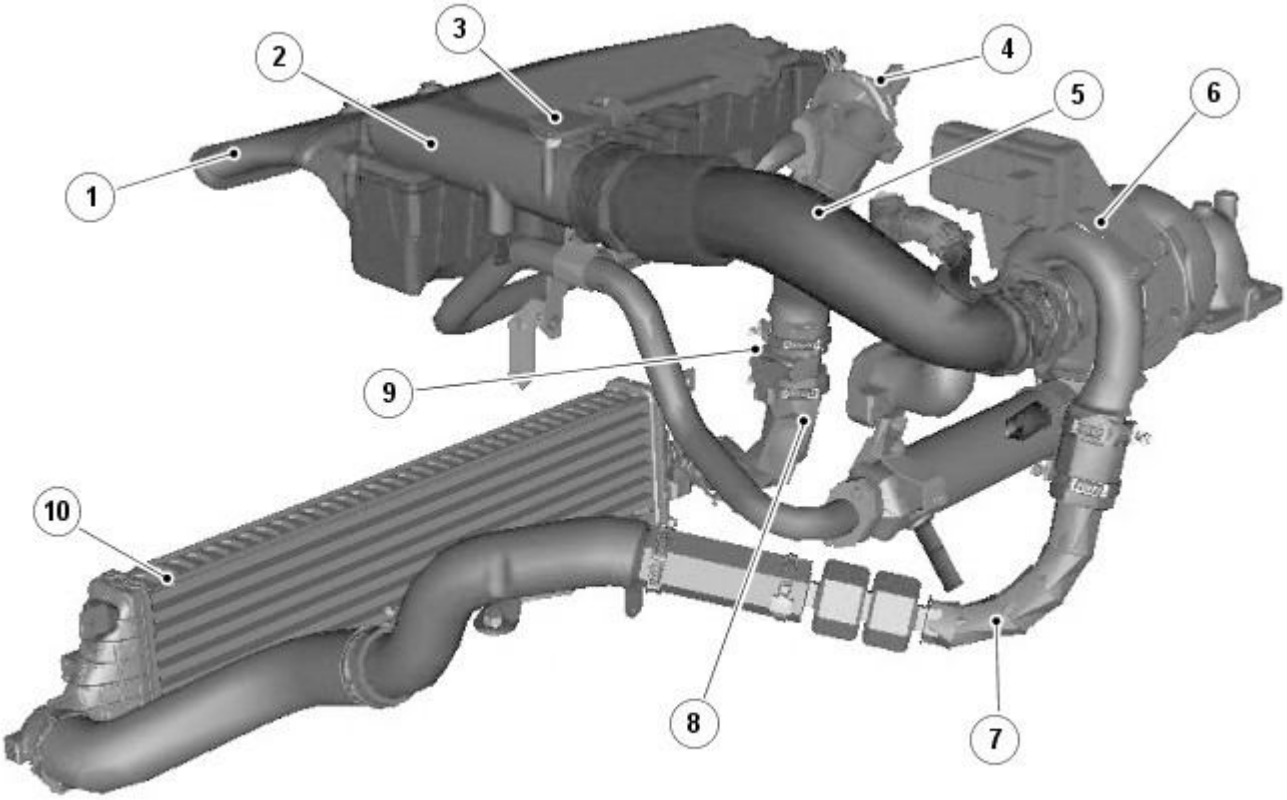

E87138

- 1. **Legend**
  - 1. Dirty air duct
  - 2. Air Cleaner
  - 3. MAF sensor
  - 4. EGR valve
  - 5. Turbocharger compressor intake air pipe
  - 6. Turbocharger
  - 7. Post charge air cooler pipe
  - 8. Pre charge air cooler pipe
  - 9. MAP sensor
  - 10. Charge air cooler

• NOTE: Discuss concern with customer before carrying out any investigation, record all symptoms and conditions i.e temperatures, drive conditions including drive patterns etc. Record all customer information with respect to concern on job card. The information will be useful for future reference. If you are unsure of any operation or component fitment, please compare with another vehicle. If in doubt contact DTS

- 2. **Common Symptoms of failed Turbocharger boost system component**
  - 1. Poor performance/hesitation
  - 2. Smoky exhaust – black smoke
  - 3. Smoky exhaust – blue smoke
  - 4. Oil consumption
  - 5. Noisy operation

- **Air Intake System - Check for:**
- 3. **Dirty Air Duct:**
  - 1. Check for restricted air flow
  - 2. Blockage from dirt
  - 3. Blockage from foreign object (including snow)
  - 4. Pipe connection to air cleaner
  - 5. Misaligned connection
  - 6. **Corrective action: Clear restriction, establish pipe connection or replace if damaged**

- 4. **Air Cleaner:**
  - 1. Restricted air filter
  - 2. Blockage from dirt
  - 3. Blockage from foreign object (including snow)
  - 4. Restriction due to water saturation
  - 5. Check air cleaner housing for damage and air path restrictions
  - 6. **Corrective action: Replace sensor as new ONLY if the substitute sensor rectifies fault. Corrective action: Replace air filter housing if damaged. Replace filter only if clearly blocked or damaged**

- 5. **Turbocharger compressor intake air pipe:**
  - 1. Air leaks – air cleaner connection
  - 2. Air leaks – turbocharger compressor connection
  - 3. Air leaks – breather pipe connection
  - 4. Badly located clamps
  - 5. Check pipe for damage
  - 6. Check for collapsing of hose – breather pipe end
  - 7. **Corrective action: Ensure clamps/pipe are correctly located – change pipe if found to be damaged. Replace sensor as new, ONLY if the substitute sensor rectifies fault**

Turbocharger Troubleshooting Guide

- **Turbocharger Boost Circuit – Check for:**
- 6. **Pre Charge Air Cooler Pipes:**
  - 1. Split hose
  - 2. Badly located hose
  - 3. Badly located clamp
  - 4. Incorrect clamp torque
  - 5. Oil saturation of hose
  - 6. Check for blockage – Remove pipes to check
  - 7. Check MAP sensor installation and wiring integrity
  - 8. **Correction action: Realign any badly located pipes or replace any damaged or split pipes**

- 7. **Post Charge Air Cooler leaks:**
  - 1. Split hose
  - 2. Badly located hose
  - 3. Badly located clamp
  - 4. Check charge air cooler for damage
  - 5. Check charge air cooler for oil contamination
  -

  CAUTION: Engine oil should always be removed from charge air cooler and intake manifold once a concern has been identified

  6. **Corrective action: Ensure correct fitment of hose pipes, replace damaged charge air cooler. Ensure oil is removed from charge air cooler and intake manifold**

- 8. **Check Charge Air Cooler for Leaks:**
  - 1. Badly located hose
  - 2. Badly located clamp
  - 3. Incorrect clamp torque
  - 4. Oil saturation of hose
  - 5. Check for blockage – Remove pipes to check
  - 6. Check MAP sensor installation and connections
  -

  CAUTION: Make sure the clips that have been re-used are secure and do not over-tighten - may cause damage to the clip

  • NOTE: Take care when replacing pipes: Do not introduce additional faults

  7. **Corrective action: Realign any badly located pipes or replace any damaged or split pipes**

- **Exhaust System - Check for:**
- 9. **Exhaust system for gas leaks:**
  - 1. Distorted manifold flange
  - 2. Missing or misaligned gasket
  - 3. Check exhaust system for blockages
  - 4. Check catalytic converter for blockage – Remove and inspect
  - 5. Check exhaust manifolds for leaks and loose bolts/incorrect torque

- **Turbocharger:**
- 10. Remove compressor intake pipe and heat shield

- 11. **Visual and Mechanical Inspection:**
  -

  • NOTE: Tools to aid with inspection; inspection lamp and vacuum pump/gauge

  1. Check turbocharger exterior for correct installation
  - 2. Check turbocharger for oil leaks
  - 3. Check for excessive sooting under heat shield. A small amount of sooting is acceptable

- 12. **Turbine wheel:**
  - 1. **Corrective action: Difficult to inspect due to design - Remove exhaust system**

- 13. **Compressor wheel:**
  - 1. Inspect for foreign body
  - 2. Inspect for oil residue – Do not change turbocharger due to oil deposits. This may be the effect, not the cause
  - 3. Inspect blades for damage – If damaged, check for foreign object in the intake system
  - 4. Check compressor wheel/housing for evidence of rubbing, bending or seizure
  -

  • NOTE: A small amount of lateral movement of the compressor wheel is normal due to the bearing clearance. Do not force the compressor wheel to touch the housing

  5. Check compressor wheel (gently rotate the compressor wheel and check for smooth operation) – Check for burrs on the compressor wheel or rub marks on the housing, that indicate the compressor wheel was rubbing. If possible, compare with a known good turbocharger

- **Turbocharger Replacement:**
- 14. **Turbocharger:**
  -

  CAUTION: The following must be carried out after turbocharger replacement and before running the engine to avoid engine damage

  1. When replacing turbocharger units where excessive oil is evident in the compressor housing, charge air cooler and associated pipework, if excessive blue smoke was exhibited from the exhaust, the following should be carried out:
  - 2. Remove and clean charge air cooler and associating pipework
  - 3. Remove and clean the intake manifold
  - 4. The vehicle should be then run for approximately 30miles (48 kilometre) to remove the residual oil from the exhaust system – Motorway road test is recommended

Fuel Charging and Controls - Turbocharger - Turbocharger

Removal and Installation

Removal

All vehicles

1. Remove the catalytic converter.
   For additional information, refer to: Catalytic Converter - 2.0L Duratorq-TDCi/2.2L Duratorq-TDCi (110kW/150PS) - Puma (309-00 Exhaust System, Removal and Installation).

Vehicles with 2.2L diesel engine

2. Remove the right-hand halfshaft.
   For additional information, refer to: Front Halfshaft RH - 2.0L Duratorq-TDCi/2.2L Duratorq-TDCi (110kW/150PS) - Puma (205-04 Front Drive Halfshafts, Removal and Installation).

Vehicles built up to VIN:E25781

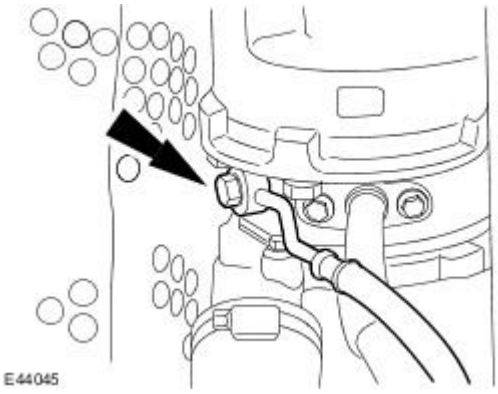

3. Detach the oil supply tube from the turbocharger.
   - Discard the sealing washers.

Vehicles built from VIN:E25782

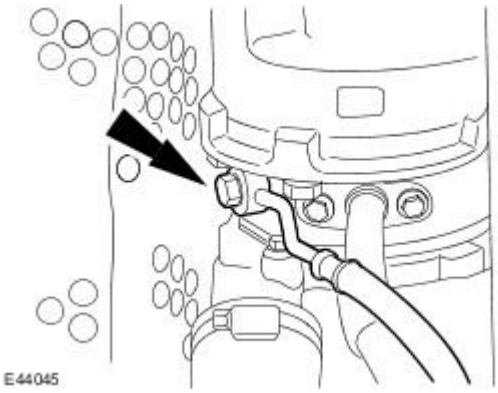

4. Detach the oil supply tube from the turbocharger.

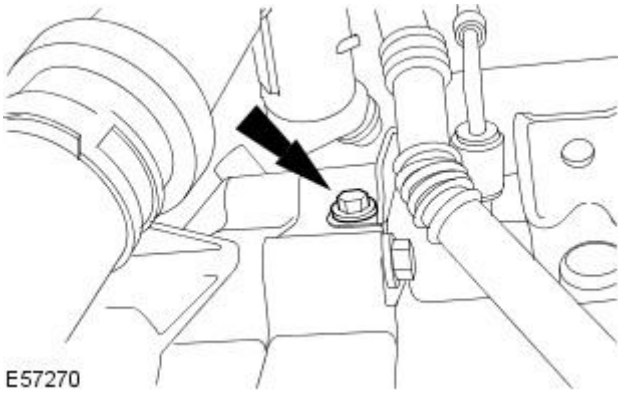

5. Detach the oil supply tube.

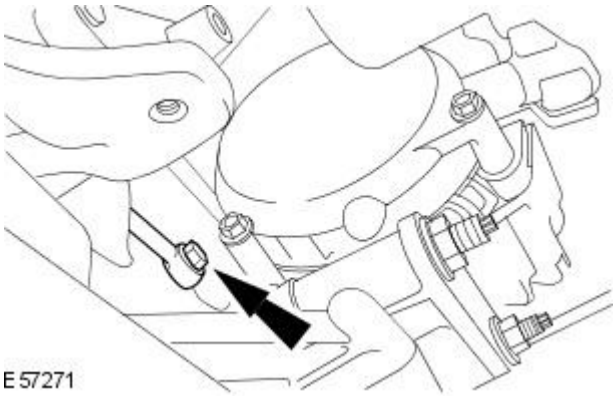

6. Remove the oil supply tube.

All vehicles

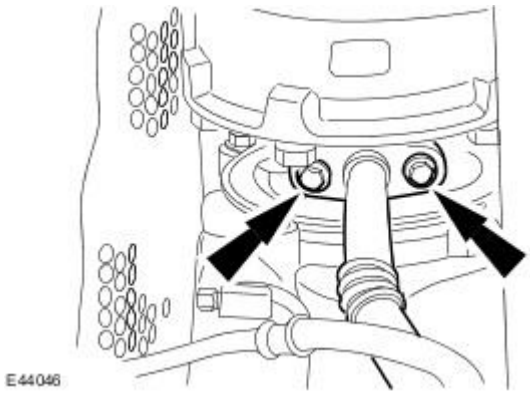

7. Detach the oil return tube from the turbocharger.

- Discard the gasket.

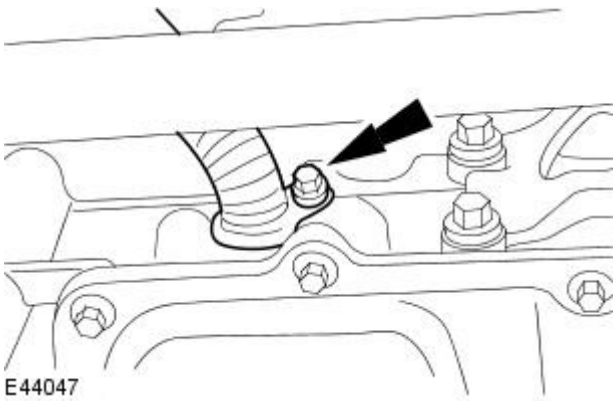

8. Remove the oil return tube.

- Discard the O-ring seal.

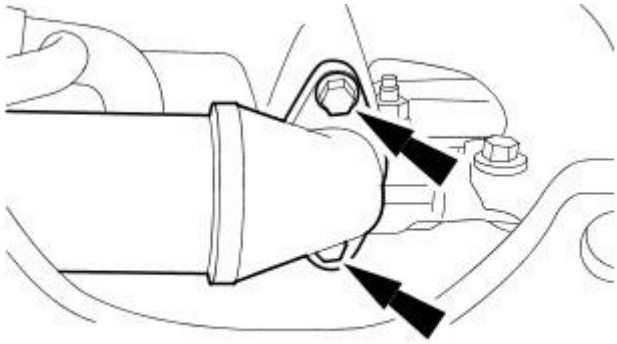

9. Detach the exhaust gas recirculation (EGR) cooler from the exhaust manifold.

- Discard the gasket.

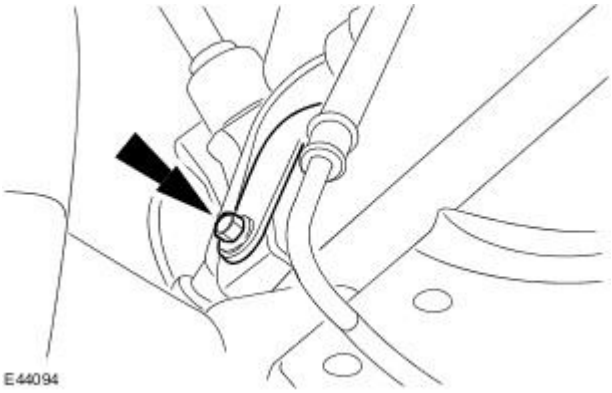

10. Detach the coolant pipe from the EGR cooler.

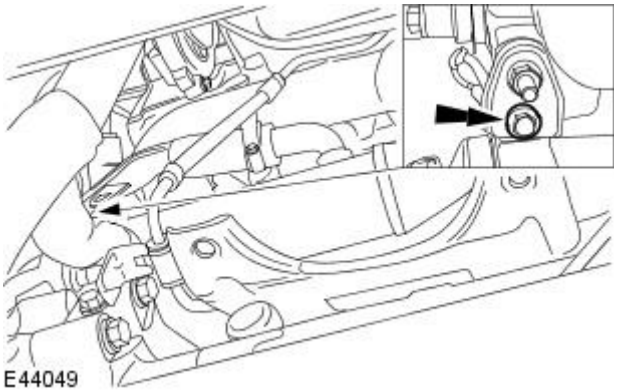

11. Remove the EGR cooler mount bracket retaining bolt.

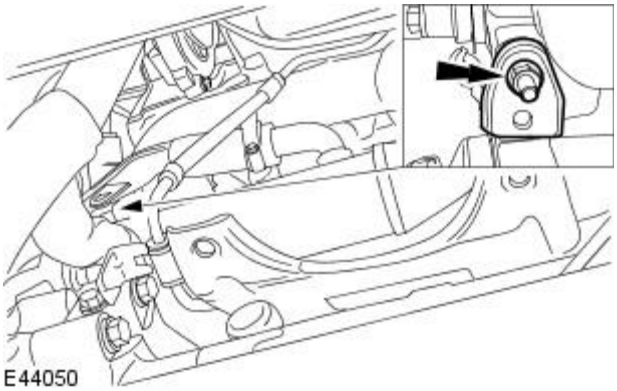

12. Remove the EGR cooler mount bracket.

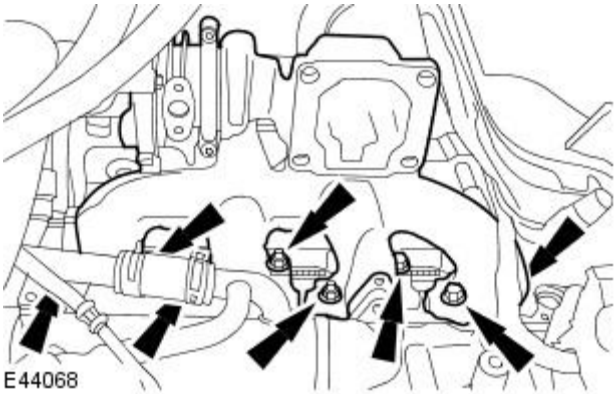

13. Remove the exhaust manifold retaining bolts and nuts.

- Discard the bolts and nuts.

14. Lower the vehicle.

15. Remove the cowl vent screen.
For additional information, refer to: Cowl Vent Screen (501-02 Front End Body Panels, Removal and Installation).

Vehicles built up to VIN:E43868

16. Disconnect the vacuum hose.

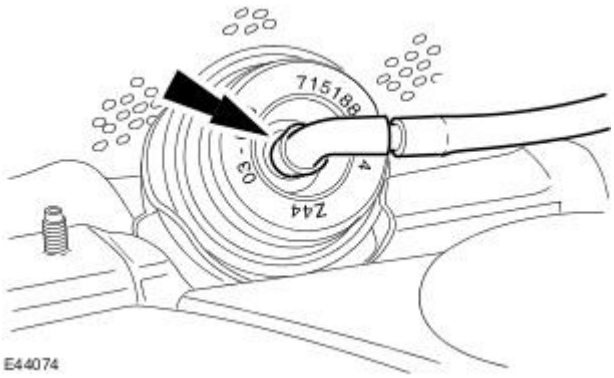

17. Detach the positive crankcase ventilation hose from the valve cover.

- Discard the positive crankcase ventilation hose retaining clip.

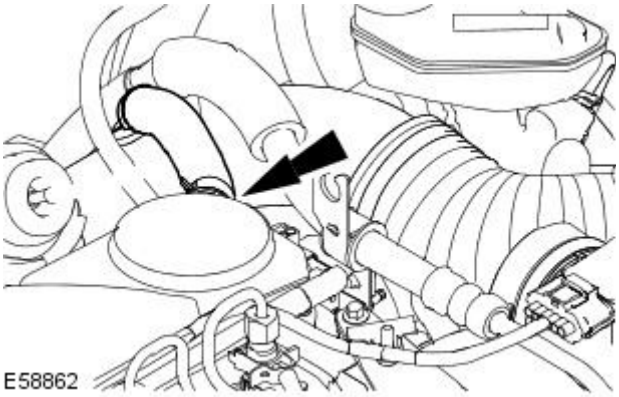

18. Detach the air cleaner outlet pipe from the turbocharger.

- Discard the air cleaner outlet pipe retaining clip.

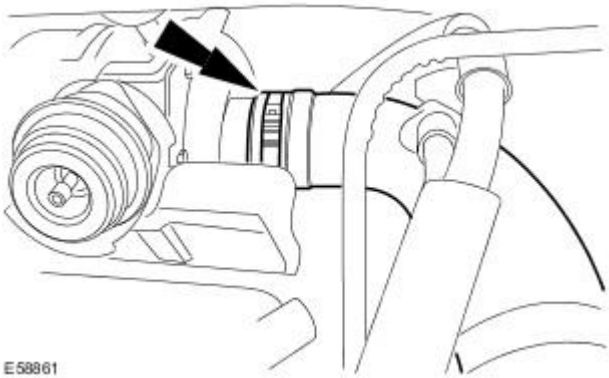

Vehicles built from VIN:E43869

19. Disconnect the electrical connector.

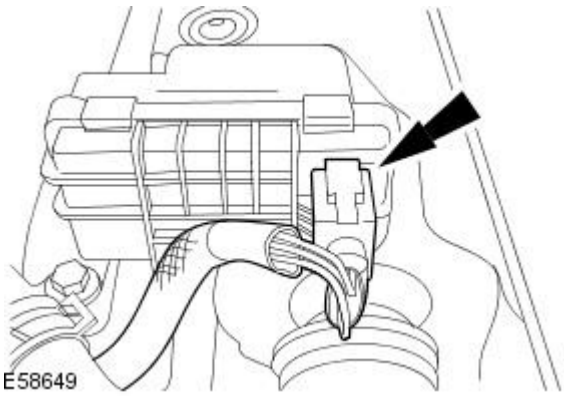

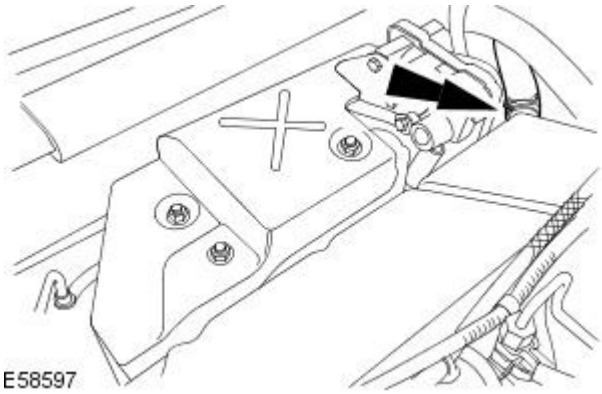

20. Detach the positive crankcase ventilation hose from the valve cover.

- Discard the positive crankcase ventilation hose retaining clip.

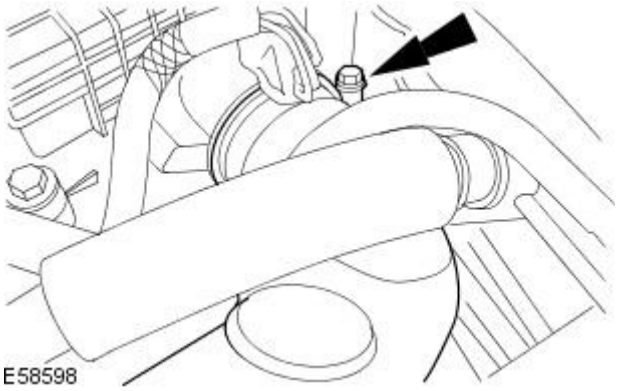

21. Detach the air cleaner outlet pipe from the turbocharger.

- Discard the air cleaner outlet pipe retaining clip.

All vehicles

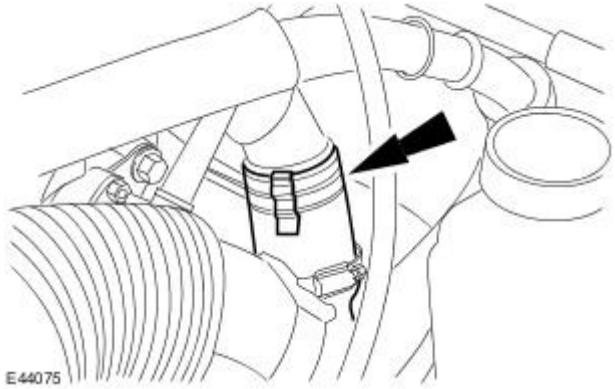

22. Detach the charge air cooler intake pipe from the turbocharger .

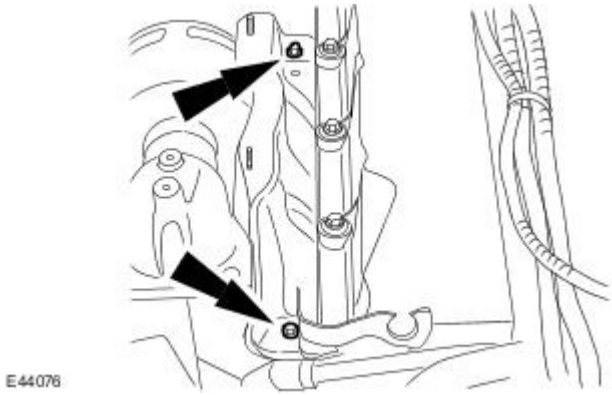

23. Remove the exhaust manifold gasket retaining bolts.

Vehicles built up to VIN:E43868

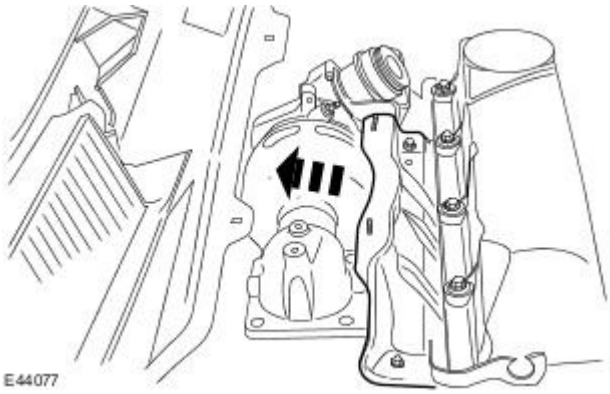

24. Detach the turbocharger from the cylinder head.

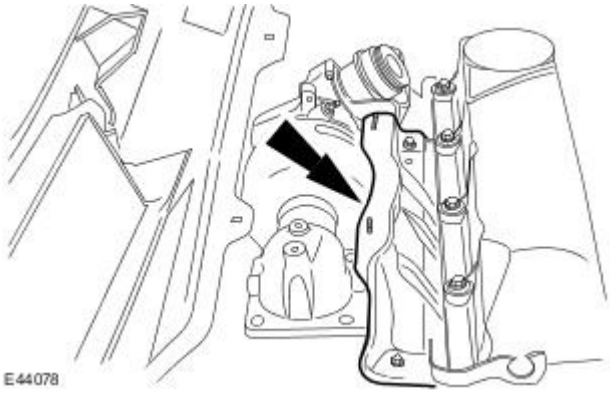

25. Remove and discard the exhaust manifold gasket.

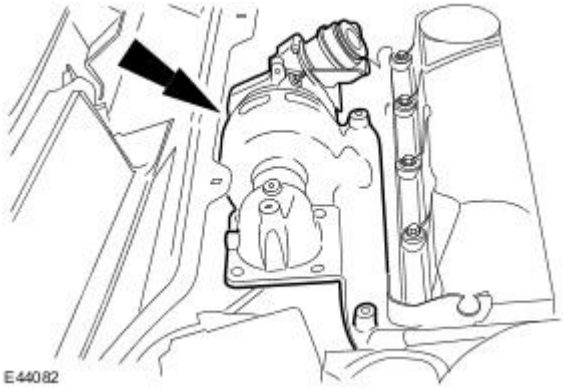

26. Remove the turbocharger.

- Remove and discard the turbocharger retaining studs.

Vehicles built from VIN:E43869

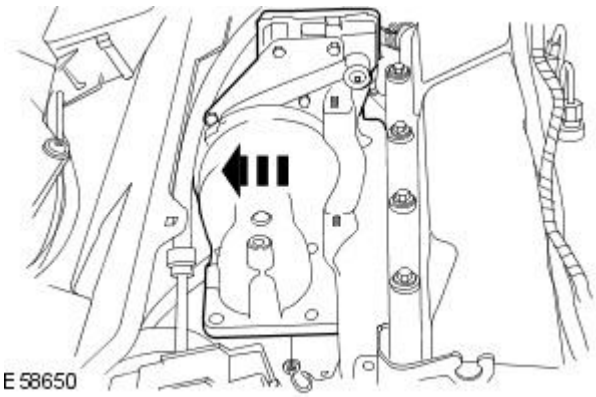

27. Detach the turbocharger from the cylinder head.

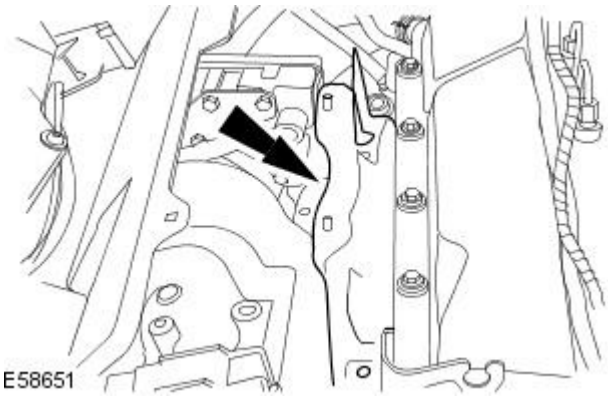

28. Remove and discard the exhaust manifold gasket.

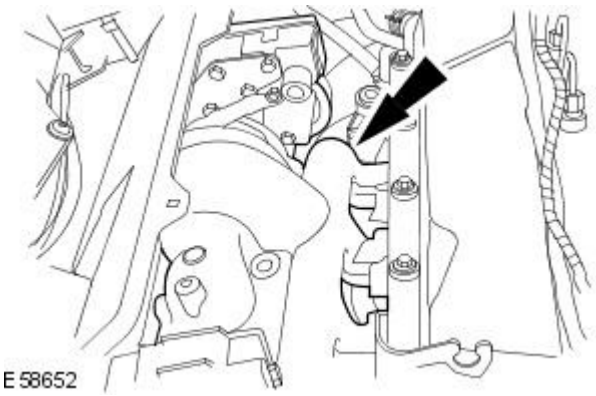

29. Remove the turbocharger.

- Remove and discard the turbocharger retaining studs.

Installation

Vehicles built from VIN:E43869

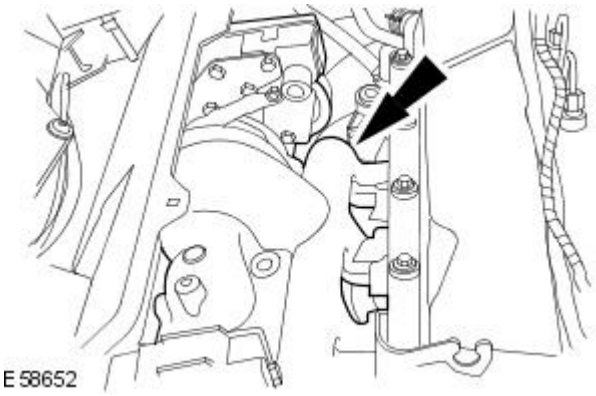

1. NOTE: Install new turbocharger retaining studs.

Install the turbocharger.

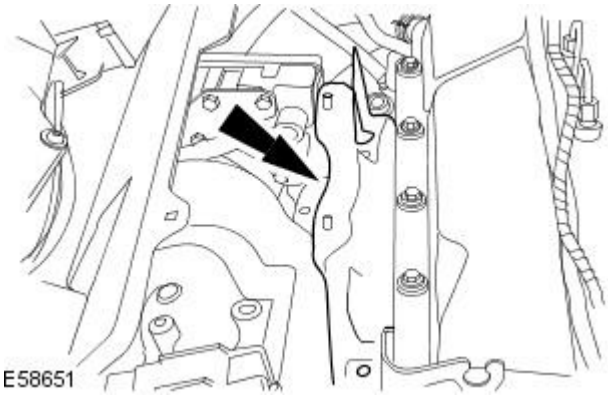

2. NOTE: Install a new gasket.

Install the exhaust manifold gasket.

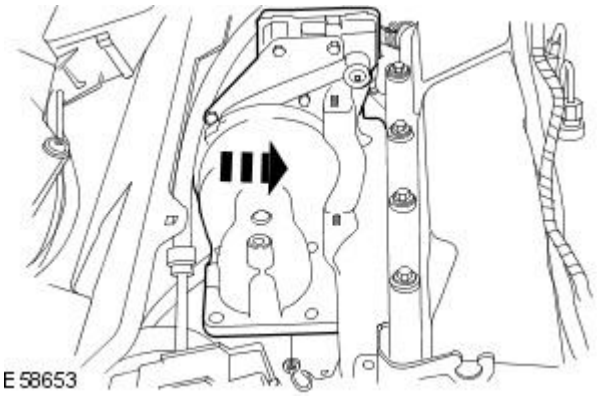

3. Attach the turbocharger to the cylinder head.

Vehicles built up to VIN:E43868

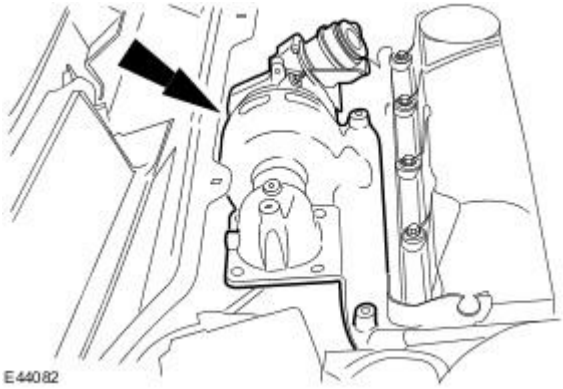

4. NOTE: Install new turbocharger retaining studs.

Install the turbocharger.

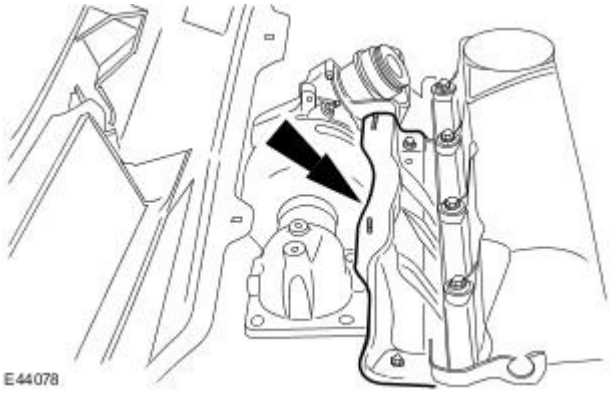

5. NOTE: Install a new gasket.

Install the exhaust manifold gasket.

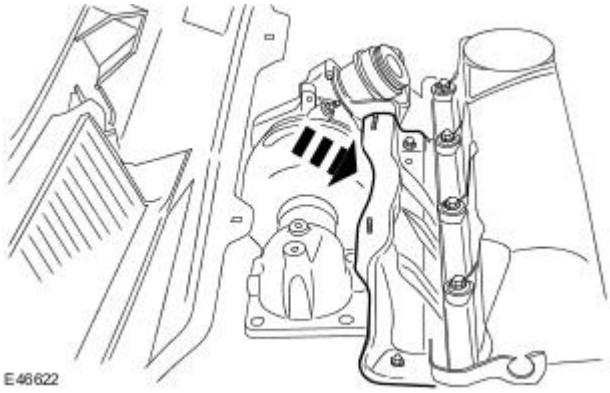

6. Attach the turbocharger to the cylinder head.

All vehicles

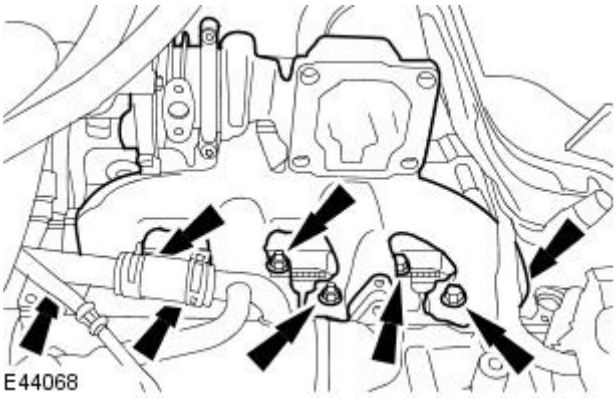

7. NOTE: Install new exhaust manifold retaining nuts and bolts

• NOTE: Vehicle shown raised for clarity.

Loosely install the exhaust manifold retaining nuts and bolts.

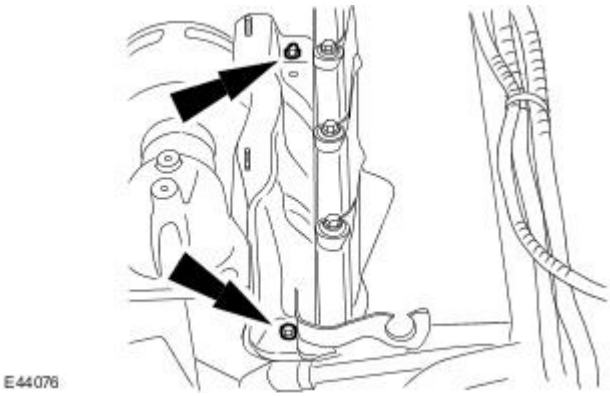

8. Install the exhaust manifold gasket retaining studs.

- Tighten to 10 Nm.

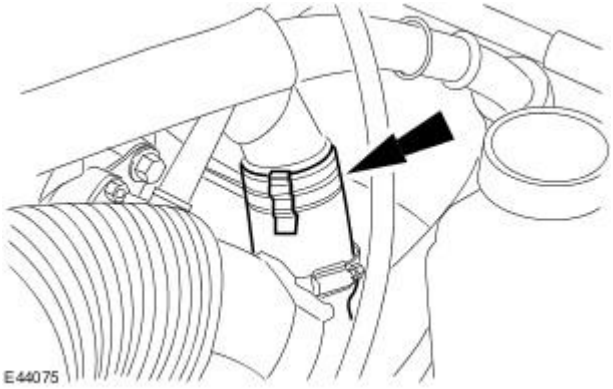

9. Attach the charge air cooler intake pipe to the turbocharger.

Vehicles built from VIN:E43869

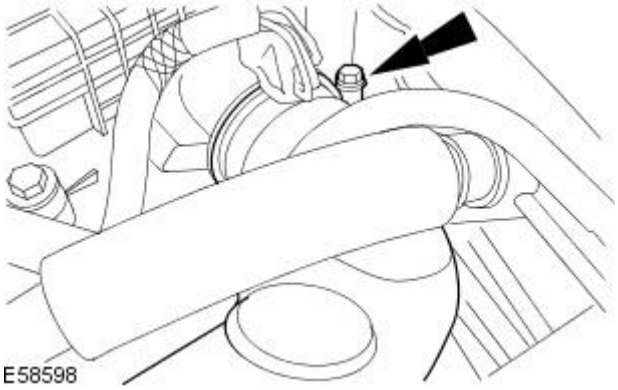

10. NOTE: Install a new air cleaner outlet pipe retaining clip.

Attach the air cleaner outlet pipe to the turbocharger.

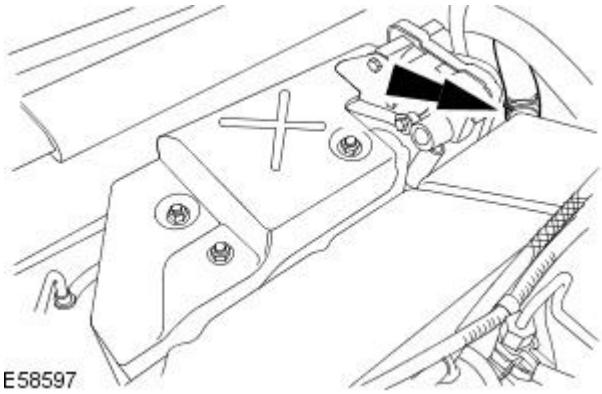

11. NOTE: Install a new positive crankcase ventilation hose retaining clip.

Attach the positive crankcase ventilation hose to the valve cover.

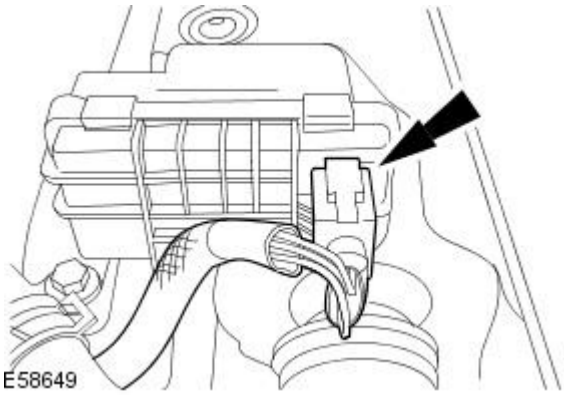

12. Connect the electrical connector.

Vehicles built up to VIN:E43868

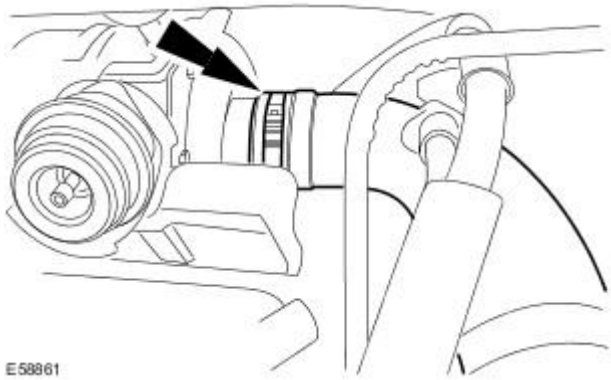

13. NOTE: Install a new air cleaner outlet pipe retaining clip.

Attach the air cleaner outlet pipe to the turbocharger.

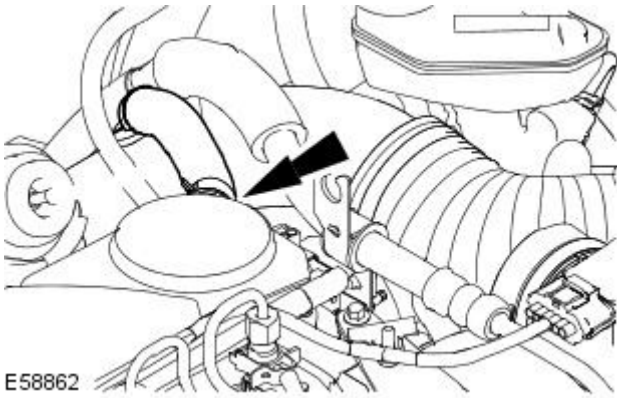

14. NOTE: Install a new positive crankcase ventilation hose retaining clip.

Attach the positive crankcase ventilation hose to the valve cover.

15. Connect the vacuum hose.

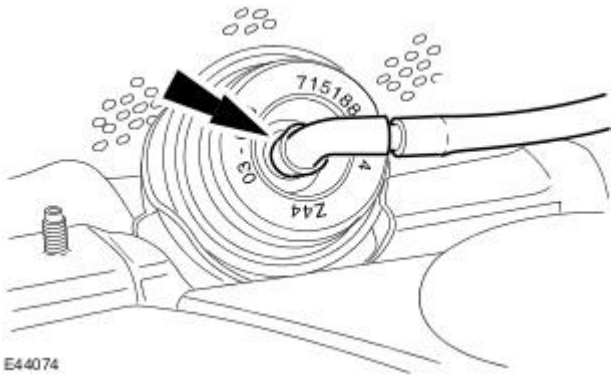

All vehicles

16. Install the cowl vent screen.
For additional information, refer to: Cowl Vent Screen (501-02 Front End Body Panels, Removal and Installation).

17. Raise the vehicle.

18. Tighten the exhaust manifold retaining nuts and bolts.

- Tighten to 40 Nm.

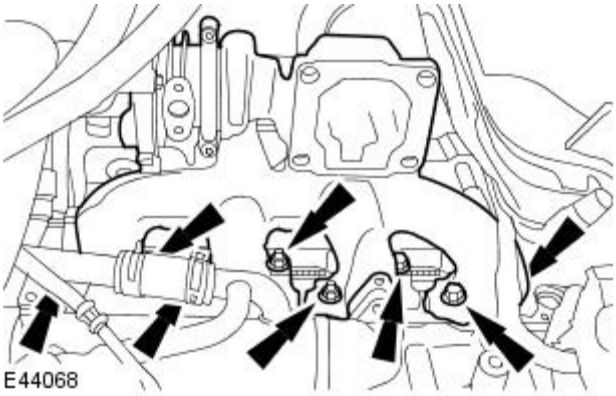

19. Install the EGR cooler mount bracket.

- Tighten to 10 Nm.

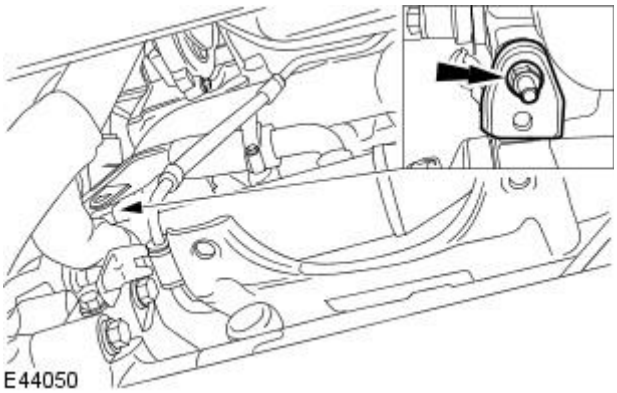

20. Install the EGR cooler mount bracket retaining bolt.

- Tighten to 10 Nm.

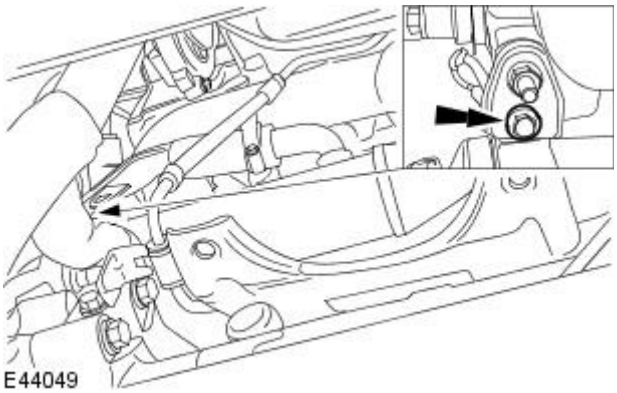

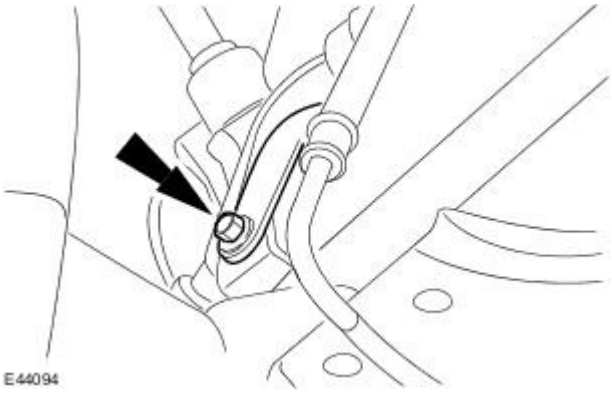

21. Attach the coolant pipe to the EGR cooler.

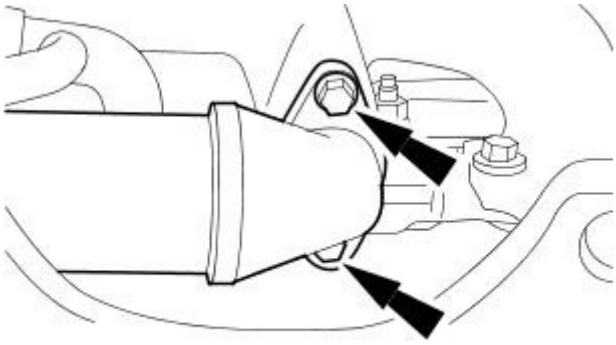

22. NOTE: Install a new gasket.

Attach the EGR cooler to the exhaust manifold.

- Tighten to 37 Nm.

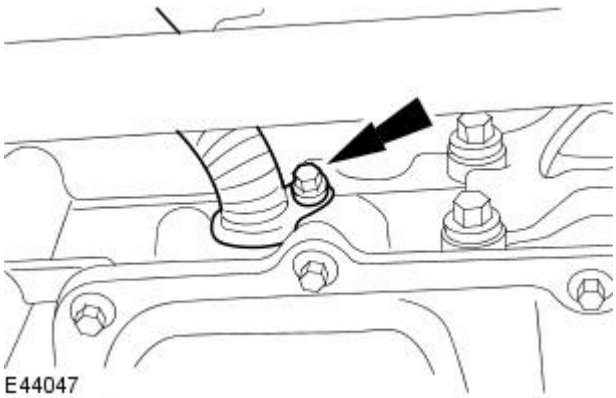

23. NOTE: Install a new O-ring seal.

Install the oil return tube.

- Tighten to 10 Nm.

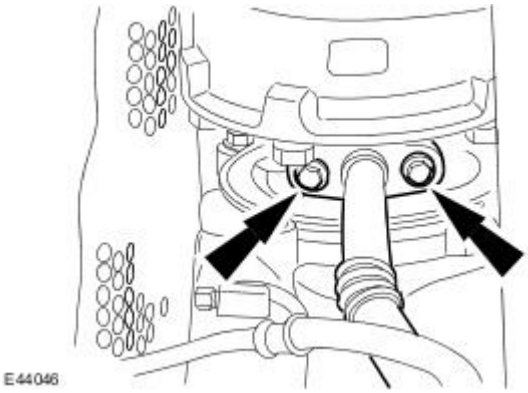

24. NOTE: Install a new gasket.

Attach the oil return tube to the turbocharger.

- Tighten to 10 Nm.

Vehicles built from VIN:E25782

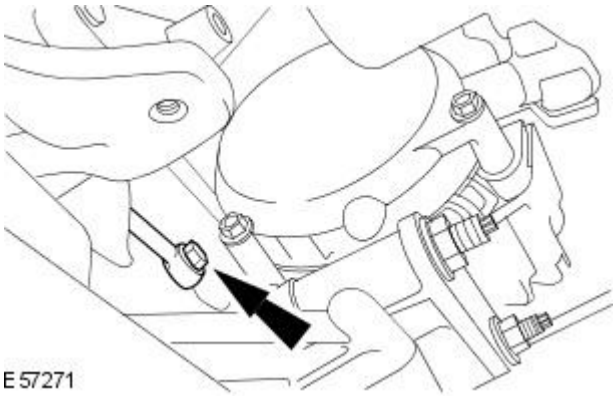

25. CAUTION: If a new oil supply tube is to be installed, ensure that the blanking caps have been removed prior to installation. Failure to follow this instruction may result in damage to the turbocharger.

Install the oil supply tube.

- Tighten to 14 Nm.

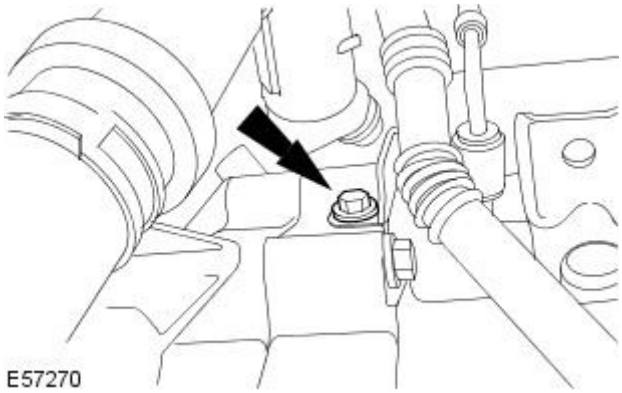

26. Attach the oil supply tube.

- Tighten to 23 Nm.

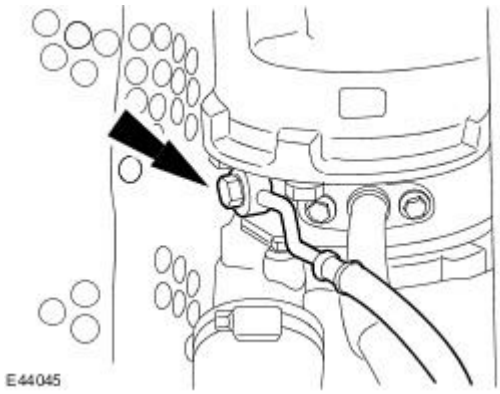

27. CAUTION: When installing the oil supply tube union to the turbocharger, check the routing of the oil supply tube and make sure that it is not touching the turbocharger.

Attach the oil supply tube to the turbocharger.

- Tighten to 14 Nm.

Vehicles built up to VIN:E25781

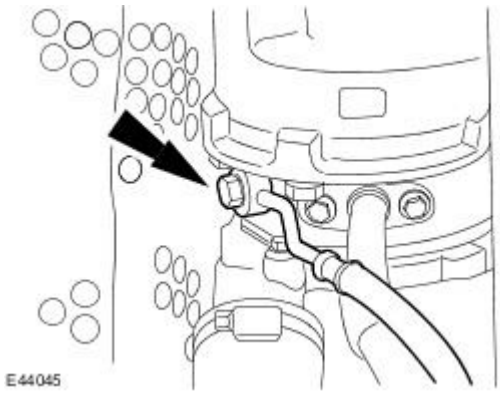

28. CAUTION: When installing the oil supply tube union to the turbocharger, check the routing of the oil supply tube and make sure it is not touching the turbocharger.

• NOTE: Install new sealing washers.

Attach the oil supply tube to the turbocharger.

- Tighten to 14 Nm.

Vehicles with 2.2L diesel engine

29. Install the right-hand halfshaft.
For additional information, refer to: Front Halfshaft RH - 2.0L Duratorq-TDCi/2.2L Duratorq-TDCi (110kW/150PS) - Puma (205-04 Front Drive Halfshafts, Removal and Installation).

All vehicles

30. Install the catalytic converter.
For additional information, refer to: Catalytic Converter - 2.0L Duratorq-TDCi/2.2L Duratorq-TDCi (110kW/150PS) - Puma (309-00 Exhaust System, Removal and Installation).

31. NOTE: Use oil WSS-M2C913-B or equivalent meeting Jaguar specification.

Check and top up the engine with oil if necessary.

Published: 11-May-2011

Accessory Drive -

Torque Specifications

Description	Nm	lb-ft	lb-in
Accessory drive belt tensioner retaining bolt - vehicles with 2.0L, 2.5L or 3.0L engine	47	35	-
Belt idler pulley retaining bolt - A bank pulley - vehicles with 2.0L, 2.5L or 3.0L engine	25	18	-
Belt idler pulley retaining bolt - B bank upper pulley - vehicles with 2.0L, 2.5L or 3.0L engine	25	18	-
Belt idler pulley retaining bolt - B bank lower pulley - vehicles with 2.0L, 2.5L or 3.0L engine	25	18	-
Water pump drive belt tensioner retaining bolt - vehicles with 2.0L, 2.5L or 3.0L engine	10	-	89
Accessory drive belt tensioner assembly retaining bolts - vehicles with 2.0L or 2.2L diesel engine	47	35	-
Generator retaining bolt - vehicles with 2.0L or 2.2L diesel engine	47	35	-
Generator retaining nuts - vehicles with 2.0L or 2.2L diesel engine	47	35	-
Generator positive cable retaining nut - vehicles with 2.0L or 2.2L diesel engine	8	-	71
Exhaust gas recirculation (EGR) cooler to EGR valve tube support bracket upper retaining bolt - vehicles with 2.0L or 2.2L diesel engine	10	-	89
EGR cooler to EGR valve tube support bracket lower retaining bolts - vehicles with 2.0L or 2.2L diesel engine	23	17	-
Power steering pump belt cover retaining nut	10	-	89
Power steering pump belt tensioner retaining bolt - vehicles with 2.0L or 2.2L diesel engine	23	17	-

Accessory Drive - Accessory Drive

Description and Operation

2.0L, 2.5L and 3.0L engine

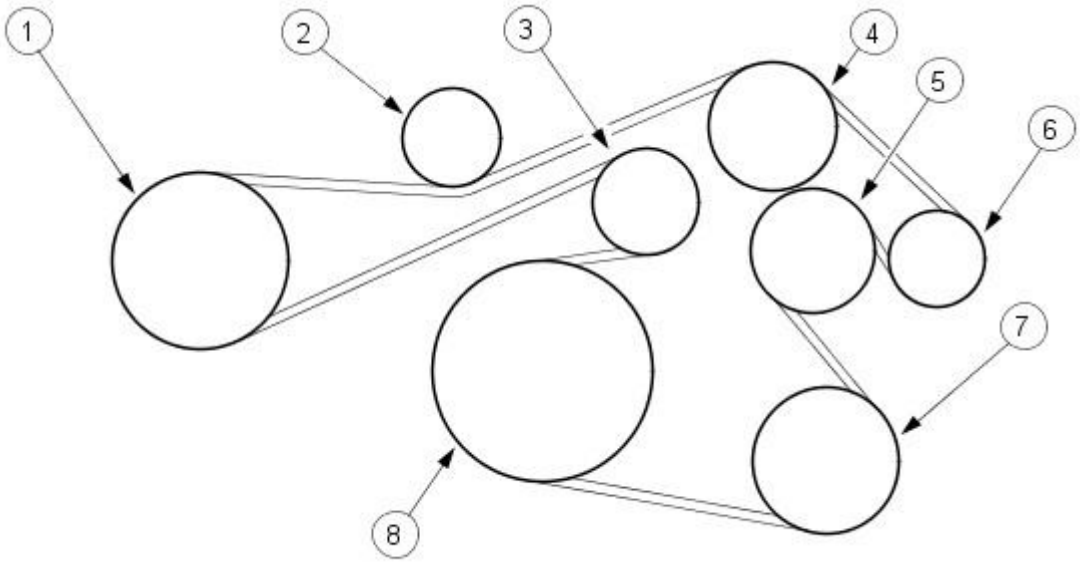

VUJ0003794

Item	Part Number	Description
1	—	Power steering pump pulley
2	—	Accessory drive belt idler pulley
3	—	Accessory drive belt tensioner
4	—	Accessory drive belt idler pulley
5	—	Accessory drive belt idler pulley
6	—	Generator pulley
7	—	Air conditioning pump pulley
8	—	Crankshaft pulley

Crankshaft Pulley

The combined crankshaft pulley and torsional vibration damper drives a single, six ribbed vee belt. The belt drives the following engine-mounted accessories; the generator, power assisted steering pump, and the air-conditioning compressor. The coolant water pump is driven by a separate drive on the rear of the engine.

Air Conditioning Compressor Drive

This is positioned at the lowest point of the front-end accessory-drive on the lower left accessory mounting.

Power Assisted Steering Pump Drive

The power assisted steering pump pulley is located on the right of the engine, above the steering gear.

Generator Drive

The generator is fitted on the upper left accessory mounting.

Belt Tensioner

Automatic tensioners are calibrated to provide the correct amount of tension to the belt for a given accessory drive system. Unless a spring within the tensioner assembly breaks, or some other mechanical part of the tensioner fails, there is no need to check the tensioner for correct tension.

2.0L and 2.2L diesel engine

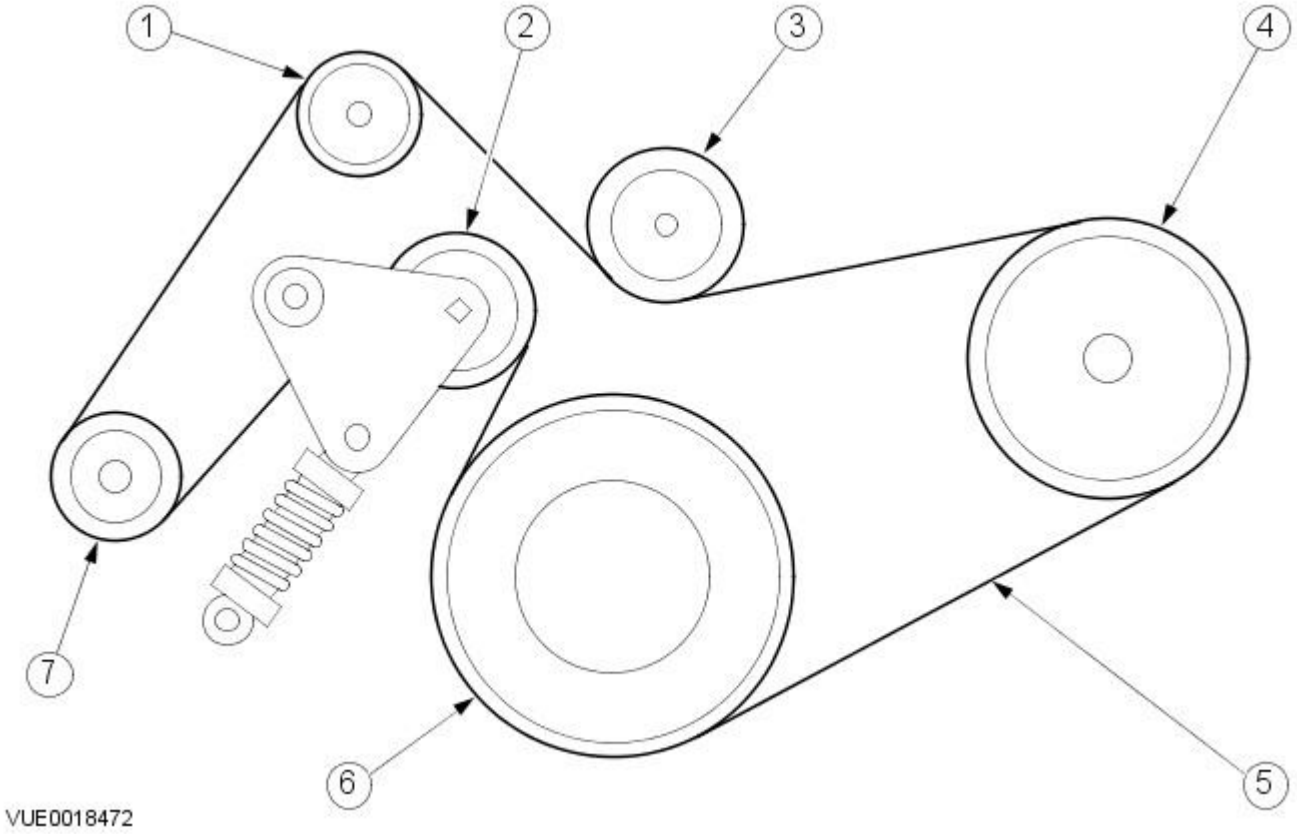

Item	Part Number	Description
1	—	Accessory drive belt idler pulley
2	—	Accessory drive belt tensioner
3	—	Accessory drive belt idler pulley
4	—	Air conditioning pump pulley
5	—	Accessory drive belt
6	—	Crankshaft pulley
7	—	Generator pulley

Crankshaft Pulley

The crankshaft pulley drives a single, six ribbed vee belt. The belt drives the generator and the air-conditioning compressor. The power assisted steering pump is driven by a separate drive belt on the rear of the engine. The coolant water pump is driven by the power assisted steering pump.

Air Conditioning Compressor Drive

This is positioned on the upper left accessory mounting.

Generator Drive

The generator is fitted on the lower right accessory mounting.

Belt Tensioner

Automatic tensioners are calibrated to provide the correct amount of tension to the belt for a given accessory drive system. Unless a spring within the tensioner assembly breaks, or some other mechanical part of the tensioner fails, there is no need to check the tensioner for correct tension.

Drive Belt

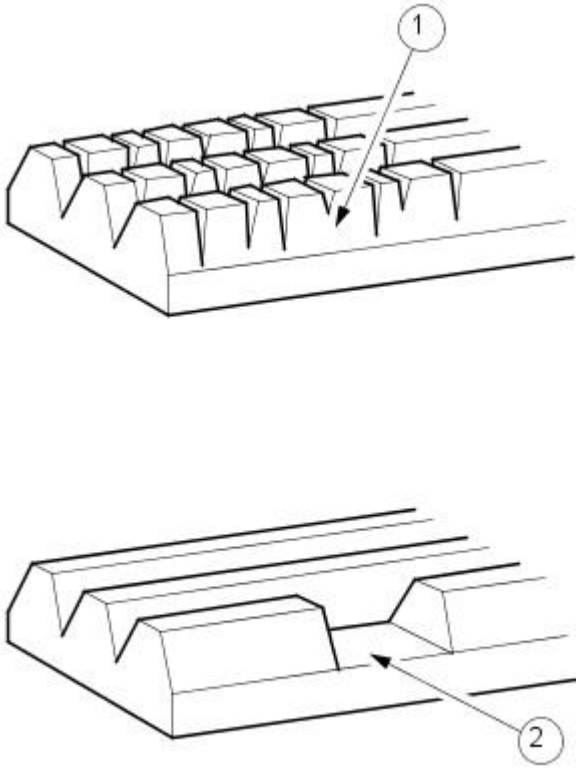

VUJ0000908

Item	Description
1	Acceptable Drive Belt Cracking
2	Unacceptable Drive Belt Damage

The drive belt should be inspected at every routine service for excessive wear and damage. A drive belt which displays symptoms of cracking may be perfectly fit for further service.

Should cracking be detected, serviceability may be assessed using the following guidelines:

- Fifteen cracks per rib over a 100 mm length of drive belt is acceptable.
- Section(s) of belt missing from any rib is not acceptable and the drive belt must be renewed.

Automatic Belt Tensioner

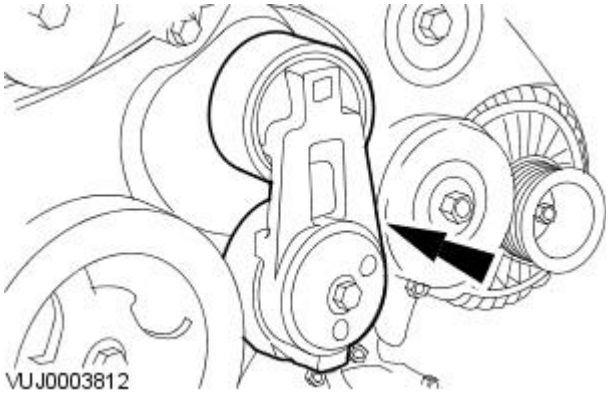

• NOTE: Petrol engine belt tensioner shown, diesel engine belt tensioner similar in operation.

The automatic belt tensioners consist of an idler pulley which is free to rotate on a bearing, located at the end of a spring-loaded pivot arm.

The pivot arm can be partially rotated to slacken the belt and allow belt removal and installation.

Accessory Drive - Accessory Drive

Diagnosis and Testing

Inspection and Verification

1. **1.** Verify the customer concern.
2. **2.** Visually inspect for obvious signs of mechanical damage.

Visual Inspection Chart

Mechanical
Damaged or contaminated belt
Belt tension
Belt tensioner
Pulleys
Loose hardware

3. **3.** If an obvious cause for an observed or reported concern is found, correct the cause (if possible) before proceeding to the next step.
4. **4.** If the concern is not visually evident, verify the symptom and refer to the symptom chart.

Symptom Chart

Symptom Chart

Symptom	Possible Sources	Action
Belt noise or squeal	* Pulley(s) * Lubricant or other contamination * Belt	* DETERMINE where the noise is coming from. CHECK pulley alignment, freedom of rotation or damage. REPAIR or INSTALL new parts as necessary. * CHECK belt for contamination. REMOVE belt and wash with detergent and water. If belt cannot be cleaned or is damaged, INSTALL a new belt. For additional information refer to Accessory Drive Belt - 2.0L NA V6 - AJV6/2.5L NA V6 - AJV6/3.0L NA V6 - AJ27 or REFER to: Accessory Drive Belt - 2.0L Duratorq-TDCi/2.2L Duratorq-TDCi (110kW/150PS) - Puma (303-05 Accessory Drive, Removal and Installation). * CHECK belt for correct application.
Belt does not hold tension	* Belt cracking or damaged * Tensioner worn or damaged	* INSPECT belt for cracking or damage. INSTALL a new belt if required. For additional information refer to Accessory Drive Belt - 2.0L NA V6 - AJV6/2.5L NA V6 - AJV6/3.0L NA V6 - AJ27 or REFER to: Accessory Drive Belt - 2.0L Duratorq-TDCi/2.2L Duratorq-TDCi (110kW/150PS) - Puma (303-05 Accessory Drive, Removal and Installation). * CHECK belt tensioner for damage and correct operation. INSTALL a new belt tensioner if required. For additional information refer to Accessory Drive Belt Tensioner - 2.0L NA V6 - AJV6/2.5L NA V6 - AJV6/3.0L NA V6 - AJ27 or REFER to: Accessory Drive Belt Tensioner - 2.0L Duratorq-TDCi/2.2L Duratorq-TDCi (110kW/150PS) - Puma (303-05 Accessory Drive, Removal and Installation).

Component Tests

Belt Tensioner-Mechanical

The only mechanical check that needs to be made is a check for tensioner "stick, grab or bind".

1. **1.** Remove the belt in the area of the tensioner.
2. **2.** Using the correct tool, rotate the tensioner from its relaxed position through its full stroke and back to the relaxed position to make sure there is no "stick, grab or bind", and to make sure that there is tension on the tensioner spring.
3. **3.** If the tensioner meets the above criteria, proceed to test the tensioner dynamically. If the tensioner does not meet the above criteria install a new tensioner. For additional information, refer to Accessory Drive Belt Tensioner - 2.0L Duratorq-TDCi/2.2L Duratorq-TDCi (110kW/150PS) - Puma or REFER to: Accessory Drive Belt Tensioner - 2.0L NA V6 - AJV6/2.5L NA V6 - AJV6/3.0L NA V6 - AJ27 (303-05 Accessory Drive, Removal and Installation).

Belt Tensioner-Dynamic

The automatic belt tensioner can be checked dynamically as follows:

1. **1.** With the engine running, observe belt tensioner movement. The tensioner should move (respond) when the air conditioning clutch cycles, or when the engine is accelerated rapidly. If the tensioner movement is not constant without the air conditioning clutch cycling or engine acceleration, a pulley or shaft is probably bent, or a pulley is out of round. Excessive belt rideout (uneven depth of grooves in the belt) can cause excessive tensioner movement. Check condition by installing a new belt.
2. **2.** With the engine off, check routing of the belt. For additional information, refer to the illustrations under Description and Operation.
3. **3.** Rotate the belt tensioner and check for a binding or seized condition. Install a new belt if necessary. For additional information refer to Accessory Drive Belt - 2.0L NA V6 - AJV6/2.5L NA V6 - AJV6/3.0L NA V6 - AJ27 or REFER to: Accessory Drive Belt - 2.0L Duratorq-TDCi/2.2L Duratorq-TDCi (110kW/150PS) - Puma (303-05 Accessory Drive, Removal and Installation).

Accessory Drive - Accessory Drive Belt2.0L Duratorq-TDCi/2.2L Duratorq-TDCi (110kW/150PS) - Puma

Removal and Installation

Special Tool(s)	
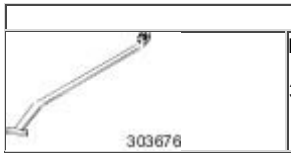	Release tool, belt tensioner 303-676

Removal

1. Disconnect the battery ground cable.
   For additional information, refer to: Battery Disconnect and Connect (414-01 Battery, Mounting and Cables, General Procedures).
2. Remove the air deflector.
   For additional information, refer to: Air Deflector - 2.0L Duratorq-TDCi/2.2L Duratorq-TDCi (110kW/150PS) - Puma (501-02 Front End Body Panels, Removal and Installation).
3. Remove the right-hand road wheel.
   For additional information, refer to: Wheel and Tire (204-04 Wheels and Tires, Removal and Installation).
4. Remove the right-hand wheel arch liner access panel.

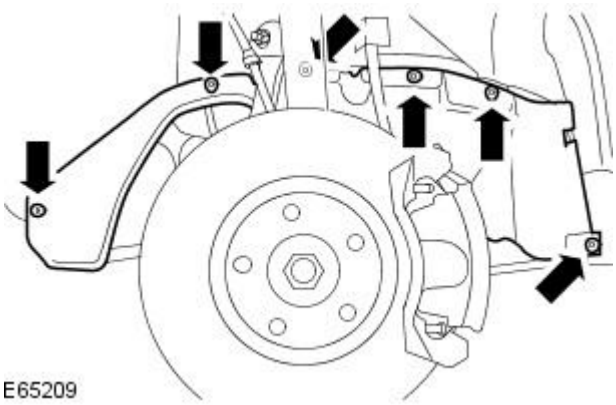

5. Using the special tool, detach the accessory drive belt.

6. Detach the generator positive cable.

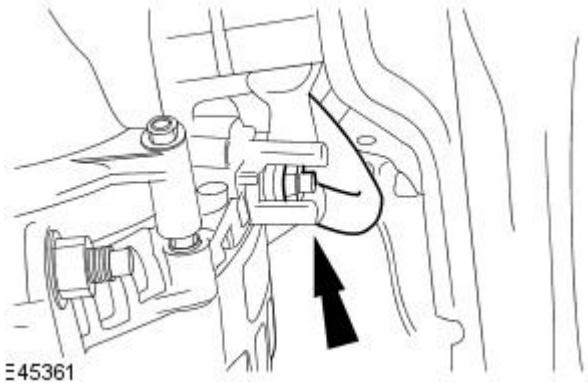

7. Disconnect the generator electrical connector.

8. Remove the generator upper retaining bolt.

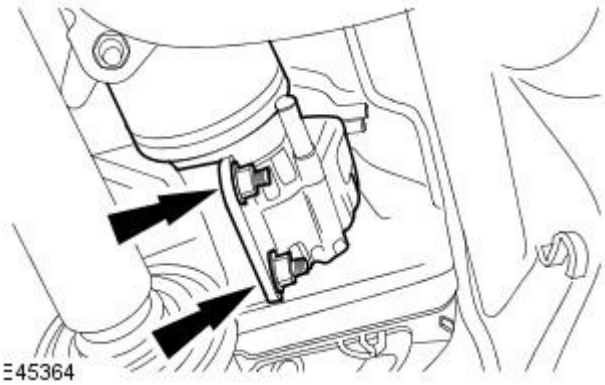

9. Detach the generator.

- Slide the generator rearwards as far away from the accessory drive belt tensioner assembly as possible.

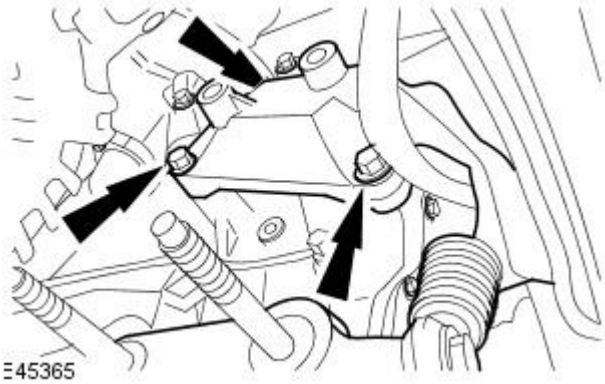

10. Detach the accessory drive belt tensioner assembly.

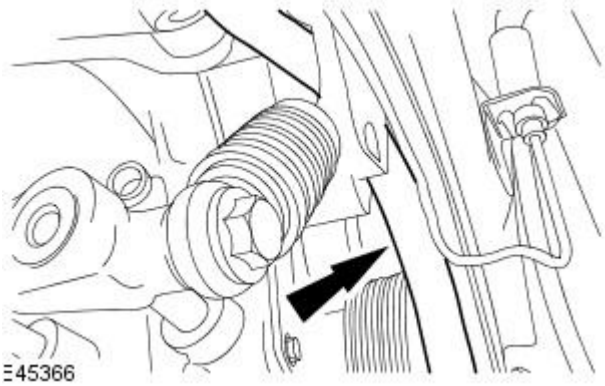

11. Remove the accessory drive belt.

Installation

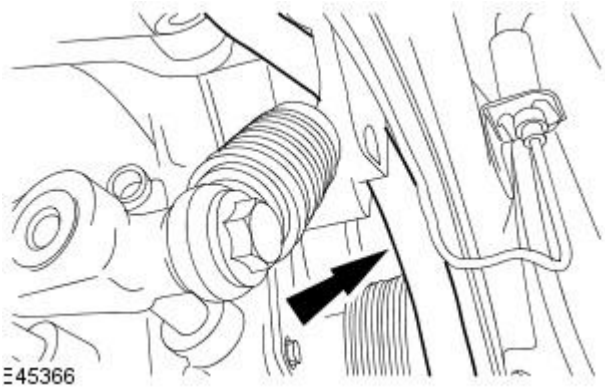

1. Install the accessory drive belt.

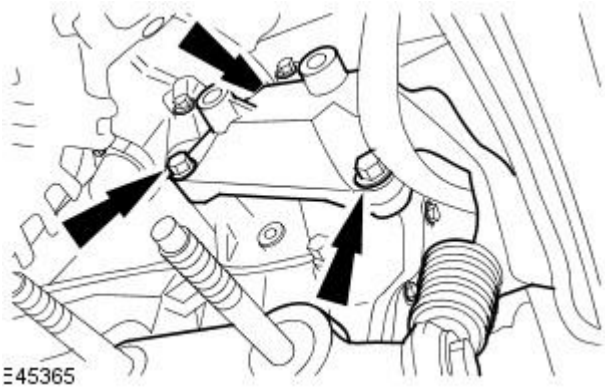

2. Attach the accessory drive belt tensioner assembly.

- Tighten to 47 Nm.

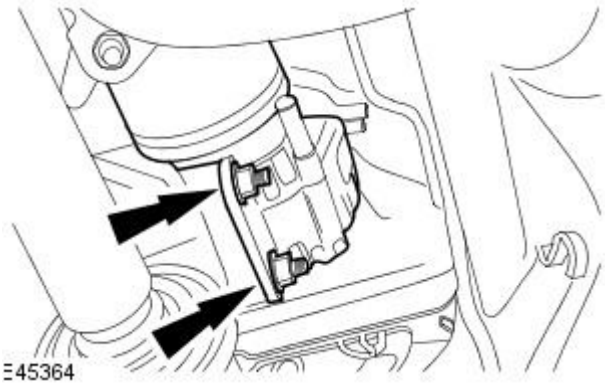

3. NOTE: Loosely install the generator retaining nuts.

Attach the generator.

4. Install the generator retaining bolt.

- Tighten to 47 Nm.

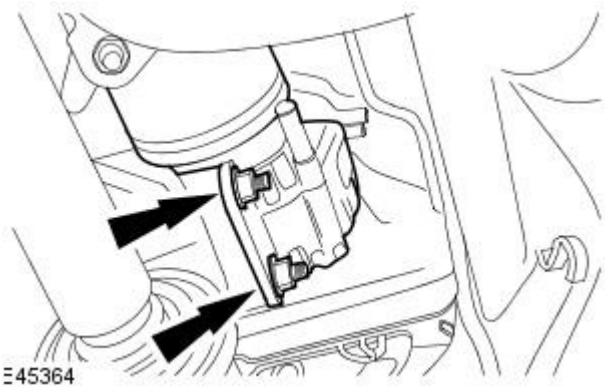

5. Tighten to 47 Nm.

6. Connect the generator electrical connector.

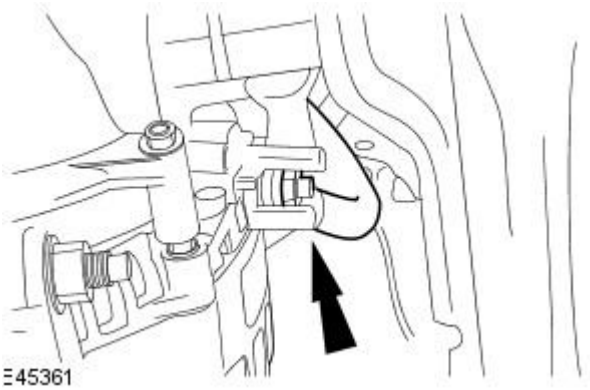

7. Attach the generator positive cable.

- Tighten to 8 Nm.

8. Using the special tool, install the accessory drive belt.

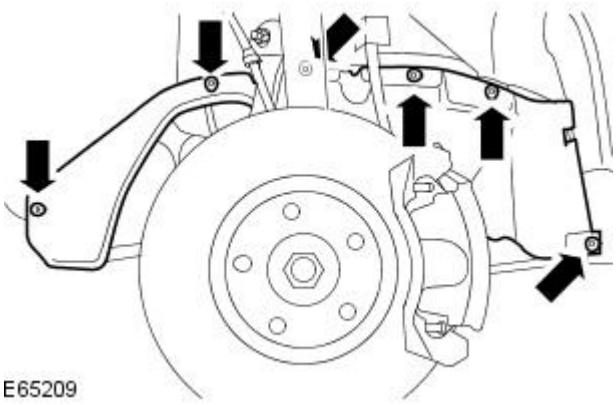

9. Install the right-hand wheel arch liner access panel.

10. Install the right-hand road wheel.
For additional information, refer to: Wheel and Tire (204-04 Wheels and Tires, Removal and Installation).

11. Install the air deflector.
For additional information, refer to: Air Deflector - 2.0L Duratorq-TDCi/2.2L Duratorq-TDCi (110kW/150PS) - Puma (501-02 Front End Body Panels, Removal and Installation).

12. Connect the battery ground cable.
For additional information, refer to: Battery Connect (414-01 Battery, Mounting and Cables, General Procedures).

Accessory Drive - Accessory Drive Belt2.0L NA V6 - AJV6 / 2.5L NA V6 - AJV6 / 3.0L NA V6 - AJ27

Removal and Installation

Special Tool(s)	
303-703	Accessory Belt De-tensioner 303-703

Removal

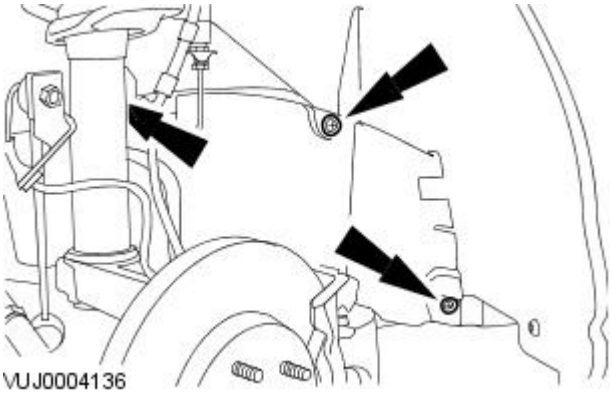

1. Disconnect the battery ground cable. For additional information, refer to Section 414-01 Battery, Mounting and Cables.
2. Remove the splash shield.

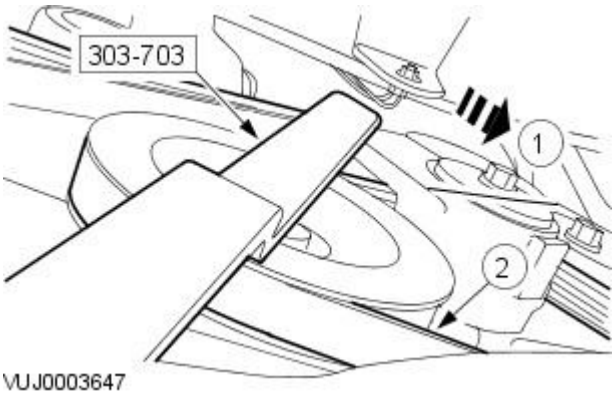

3. Remove the wheel and tire assembly. For additional information, refer to Section 204-04 Wheels and Tires.
4. Detach the accessory drive belt.
   1. Using the special tool, de-tension the accessory drive belt.
   2. Detach the accessory drive belt.

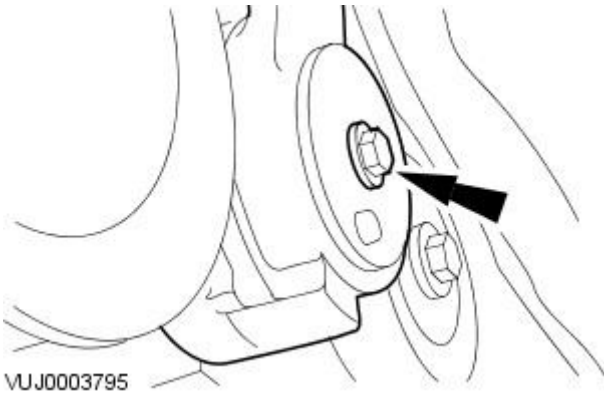

5. Remove the accessory drive belt.
   1. Slacken the tensioner.
   2. Remove the accessory drive belt.

Installation

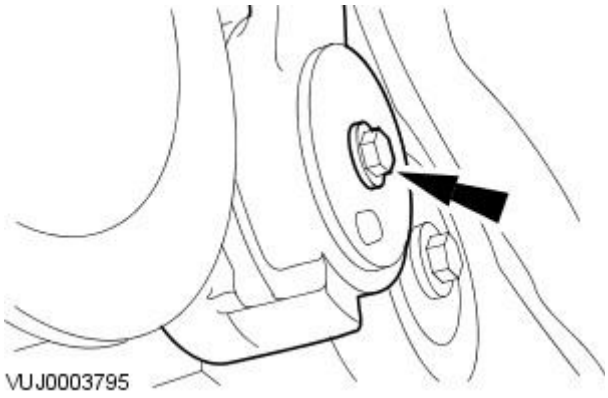

1. To install, reverse the removal procedure.

- Tighten to 47 Nm.

Accessory Drive - Accessory Drive Belt Tensioner2.0L Duratorq-TDCi/2.2L Duratorq-TDCi (110kW/150PS) - Puma

Removal and Installation

Special Tool(s)	
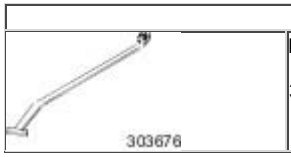	Release tool, belt tensioner 303-676

Removal

1. Disconnect the battery ground cable.
   For additional information, refer to: Battery Disconnect and Connect (414-01 Battery, Mounting and Cables, General Procedures).
2. Remove the air deflector.
   For additional information, refer to: Air Deflector - 2.0L Duratorq-TDCi/2.2L Duratorq-TDCi (110kW/150PS) - Puma (501-02 Front End Body Panels, Removal and Installation).
3. Remove the right-hand road wheel.
   For additional information, refer to: Wheel and Tire (204-04 Wheels and Tires, Removal and Installation).
4. Remove the right-hand wheel arch liner access panel.

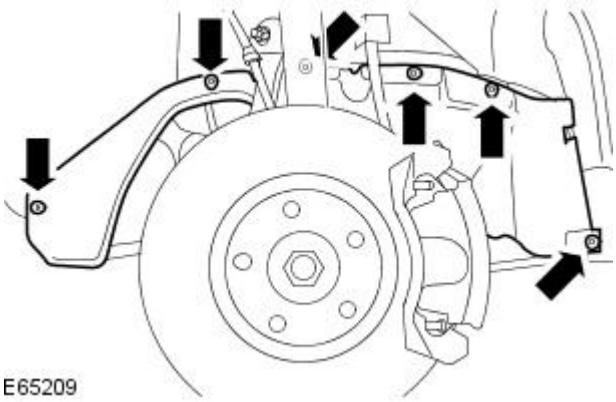

5. Using the special tool, detach the accessory drive belt.

6. Detach the generator positive cable.

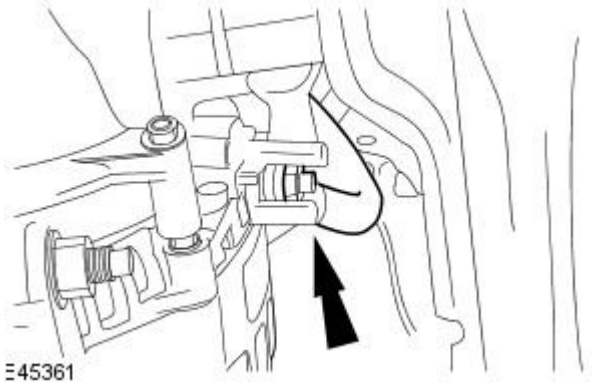

7. Disconnect the generator electrical connector.

8. Remove the generator upper retaining bolt.

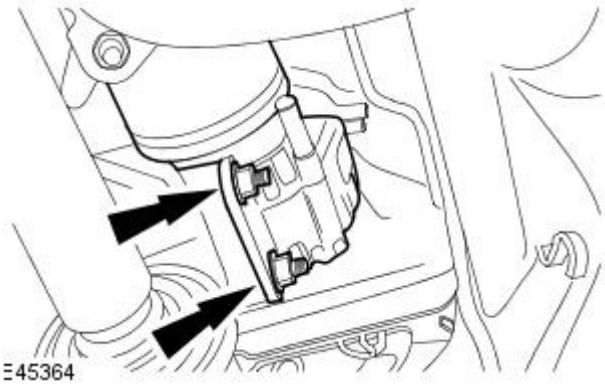

9. Detach the generator.

- Slide the generator rearwards as far away from the accessory drive belt tensioner assembly as possible.

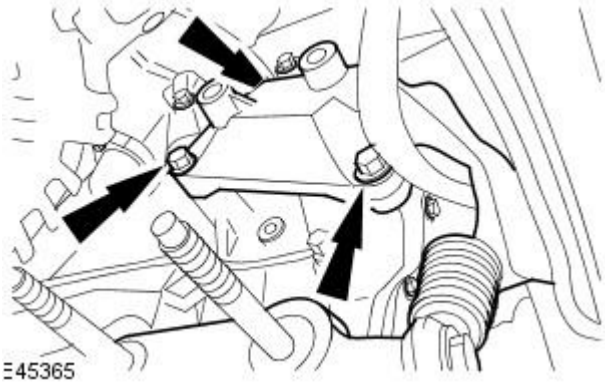

10. Detach the accessory drive belt tensioner assembly.

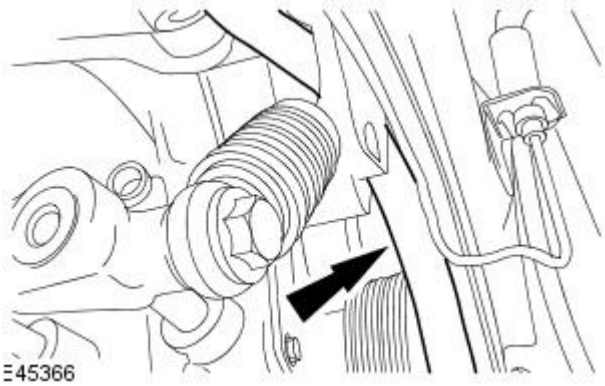

11. Detach the accessory drive belt.

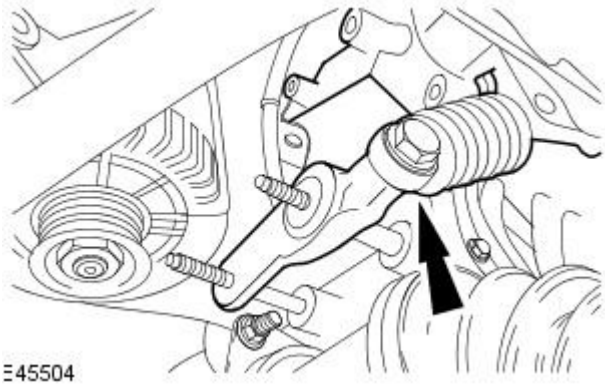

12. Remove the accessory drive belt tensioner.

Installation

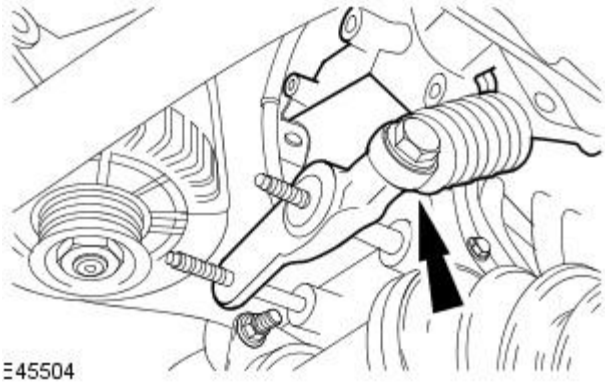

1. Install the accessory drive belt tensioner.

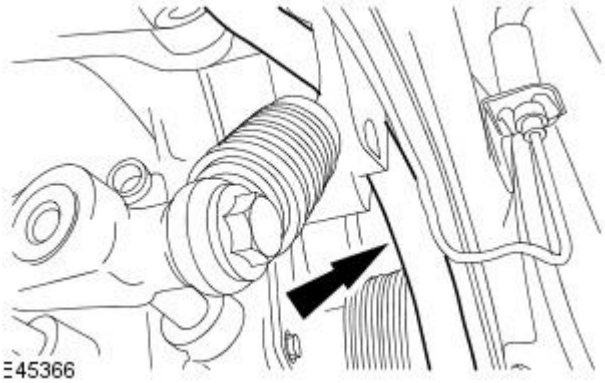

2. Attach the accessory drive belt.

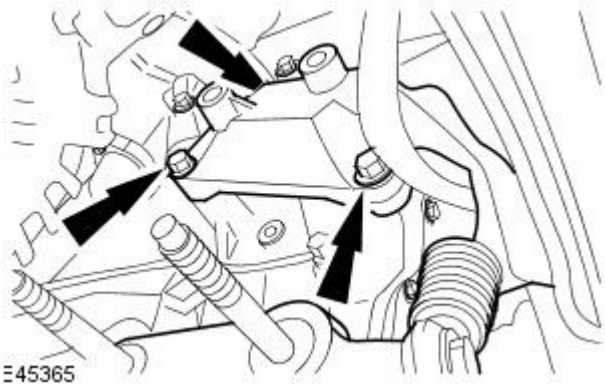

3. Attach the accessory drive belt tensioner assembly.

- Tighten to 47 Nm.

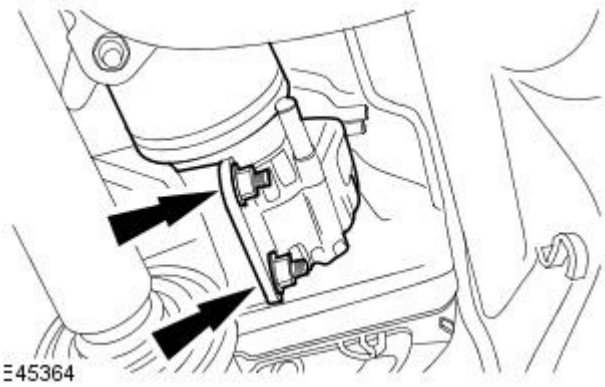

4. NOTE: Loosely install the generator retaining nuts.

Attach the generator.

5. Install the generator retaining bolt.

- Tighten to 47 Nm.

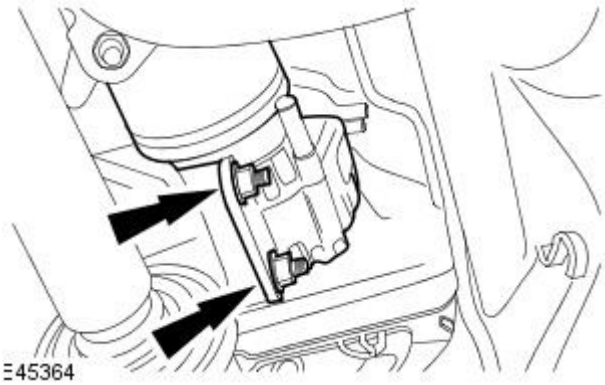

6. Tighten to 47 Nm.

7. Connect the generator electrical connector.

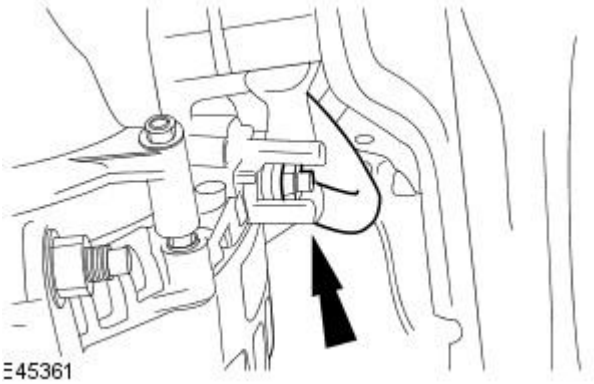

8. Attach the generator positive cable.

- Tighten to 8 Nm.

9. Using the special tool, install the accessory drive belt.

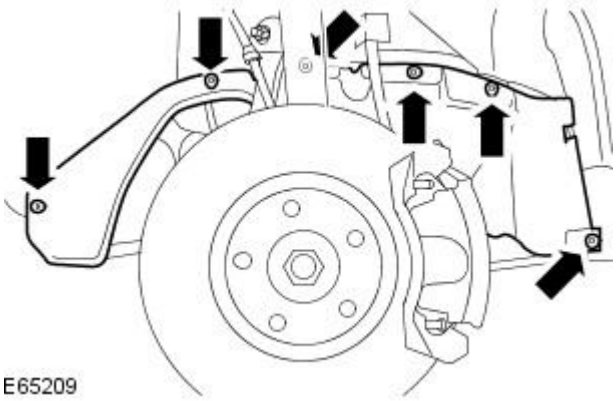

10. Install the right-hand wheel arch liner access panel.

11. Install the right-hand road wheel.
For additional information, refer to: Wheel and Tire (204-04 Wheels and Tires, Removal and Installation).

12. Install the air deflector.
For additional information, refer to: Air Deflector - 2.0L Duratorq-TDCi/2.2L Duratorq-TDCi (110kW/150PS) - Puma (501-02 Front End Body Panels, Removal and Installation).

13. Connect the battery ground cable.
For additional information, refer to: Battery Connect (414-01 Battery, Mounting and Cables, General Procedures).

Accessory Drive - Accessory Drive Belt Tensioner2.0L NA V6 - AJV6 / 2.5L NA V6 - AJV6 / 3.0L NA V6 - AJ27

Removal and Installation

Removal

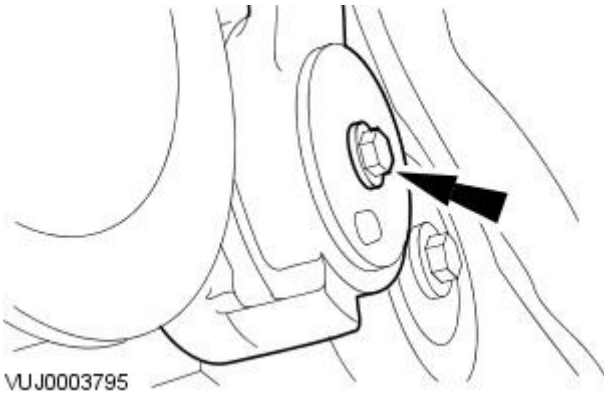

1. Remove the accessory drive belt. For additional information, refer to the Accessory Drive Belt.
2. Remove the accessory drive belt tensioner.

Installation

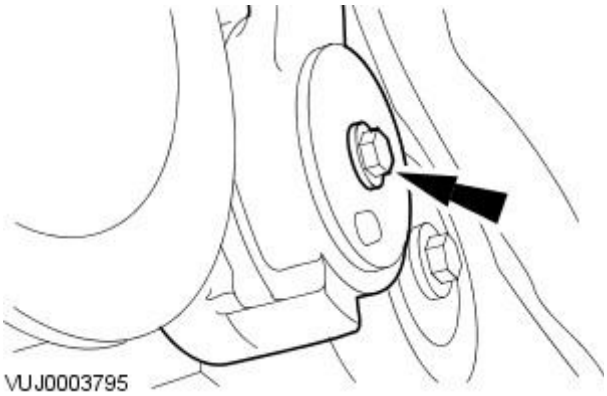

1. To install, reverse the removal procedure.
   - Tighten to 47 Nm.

Published: 11-May-2011

Accessory Drive - Power Steering Pump Belt2.0L Duratorq-TDCi / 2.2L Duratorq-TDCi (110kW / 150PS) - Puma

Removal and Installation

Removal

1. Remove the air cleaner assembly.
   For additional information, refer to: Air Cleaner (303-12B Intake Air Distribution and Filtering - 2.0L Duratorq-TDCi/2.2L Duratorq-TDCi (110kW/150PS) - Puma, Removal and Installation).
2. Detach the power steering fluid pipe.

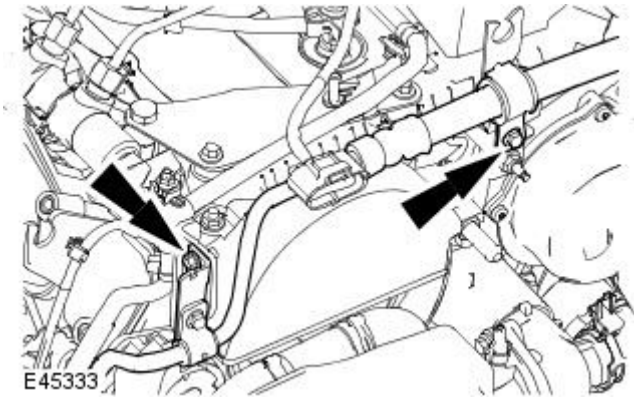

3. Remove the power steering pump belt cover retaining nut.

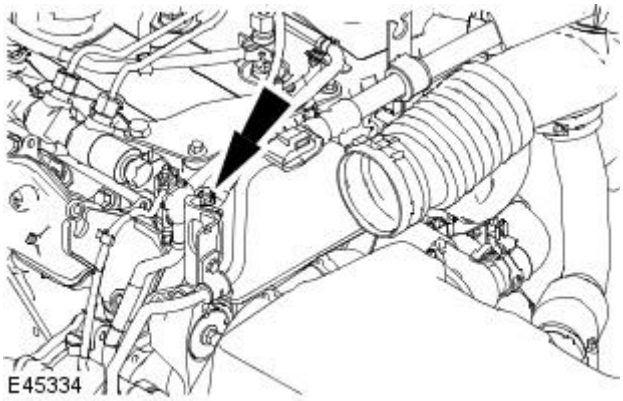

4. Remove the power steering pump belt cover.

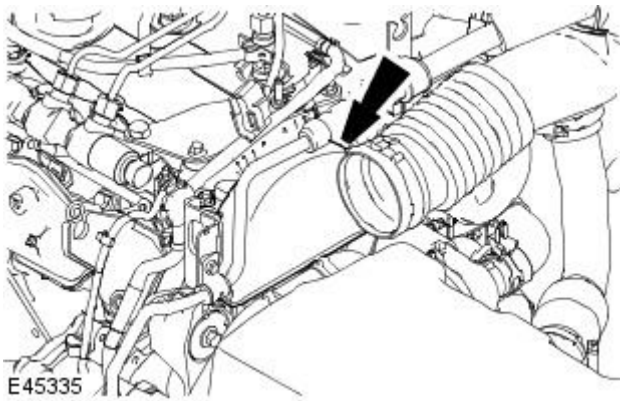

5. Remove the exhaust gas recirculation (EGR) cooler to EGR valve tube support bracket lower retaining bolts.

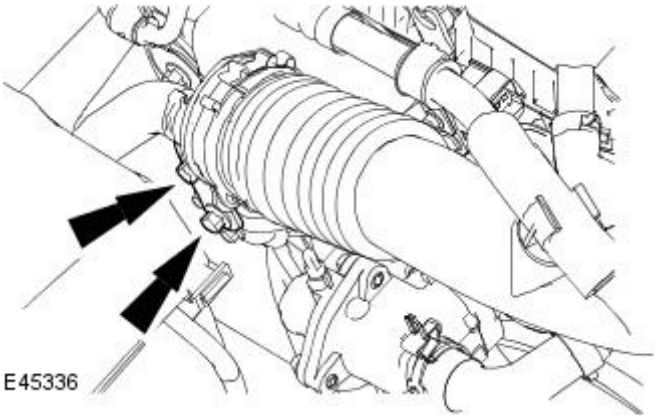

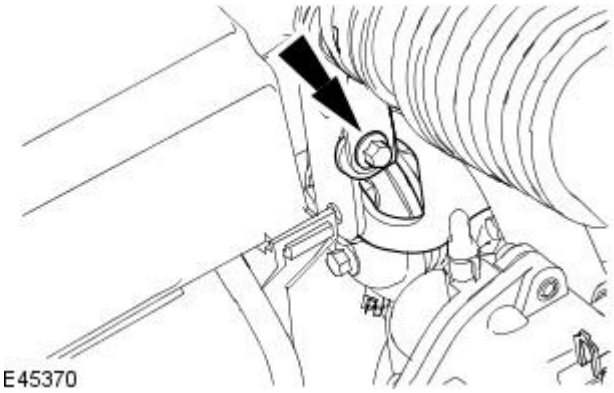

6. Remove the EGR cooler to EGR valve tube support bracket.

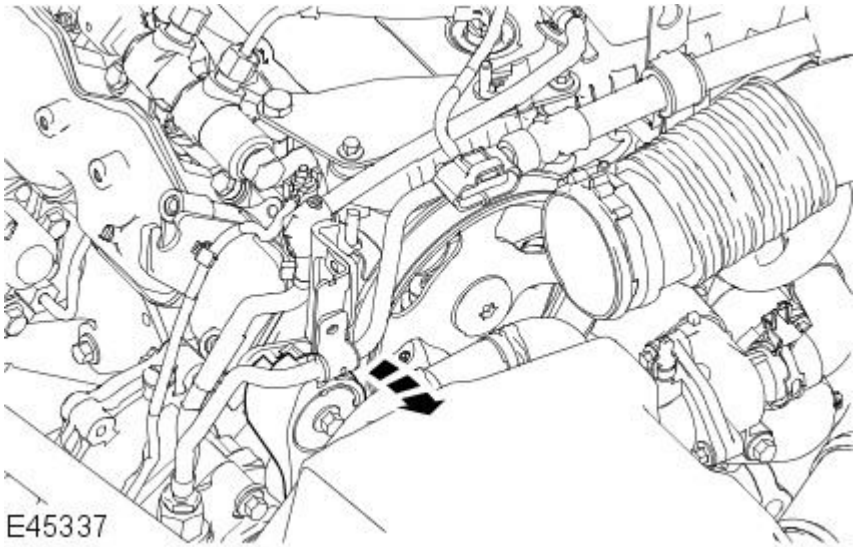

7. Remove the power steering pump belt.

- Rotate the tensioner clockwise.

Installation

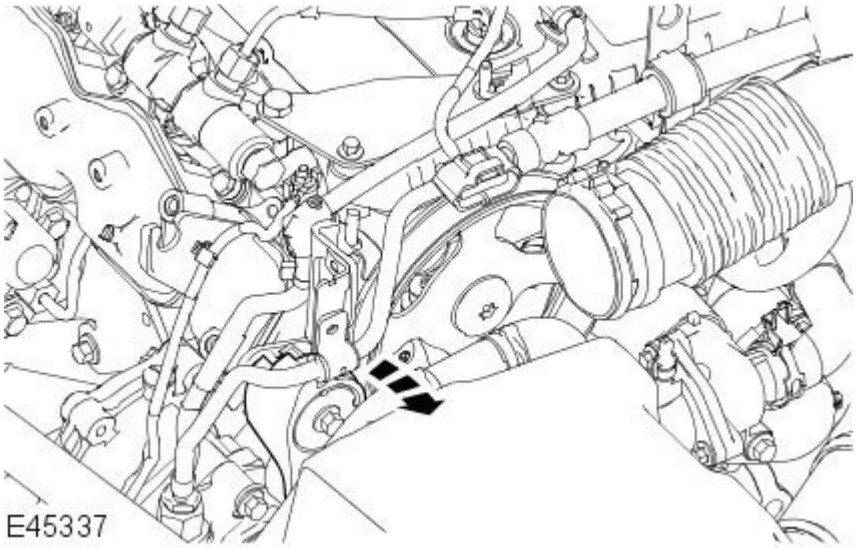

1. Install the power steering pump belt.

- Rotate the tensioner clockwise.

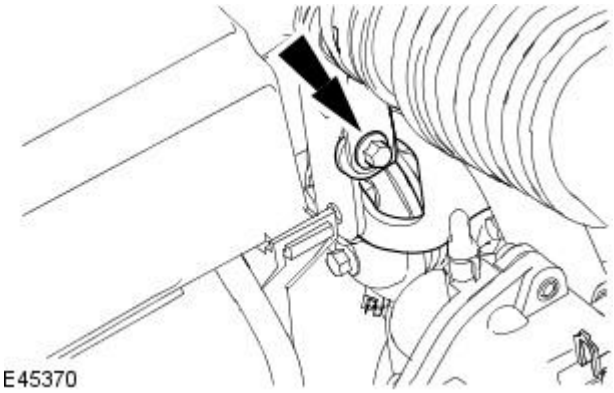

2. NOTE: Do not tighten the EGR cooler to EGR valve tube support bracket upper retaining bolt at this stage.

Install the EGR cooler to EGR valve tube support bracket.

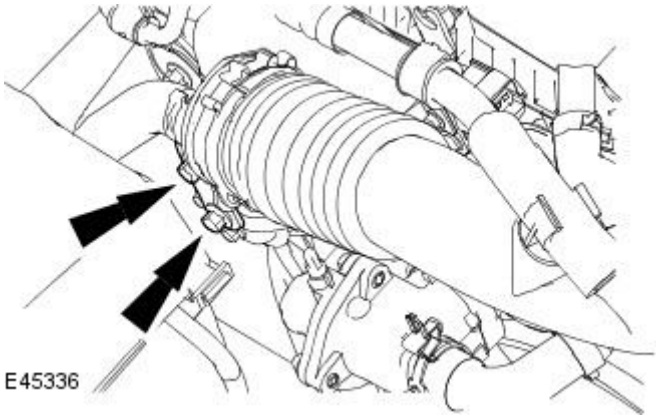

3. Install the EGR cooler to EGR valve tube support bracket lower retaining bolts.

- Tighten to 23 Nm.

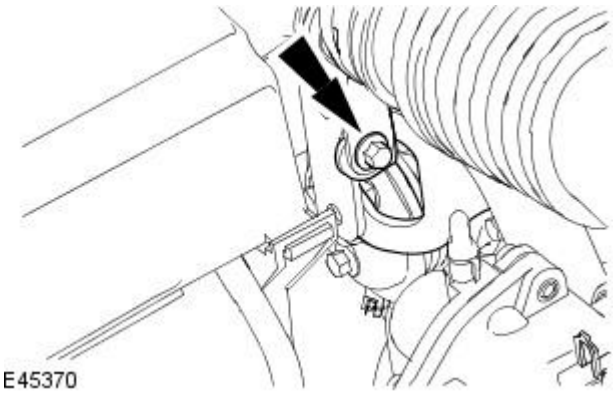

4. Tighten to 10 Nm.

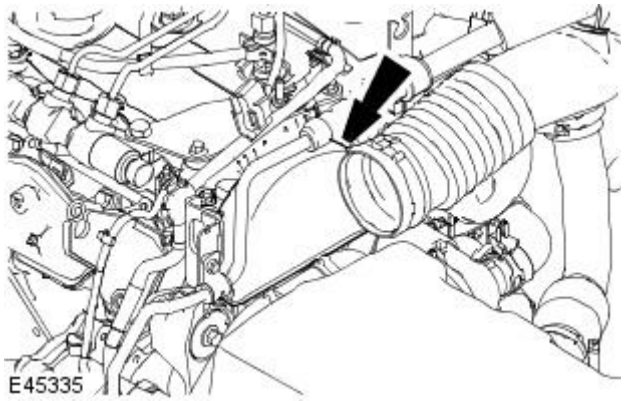

5. Install the power steering pump belt cover.

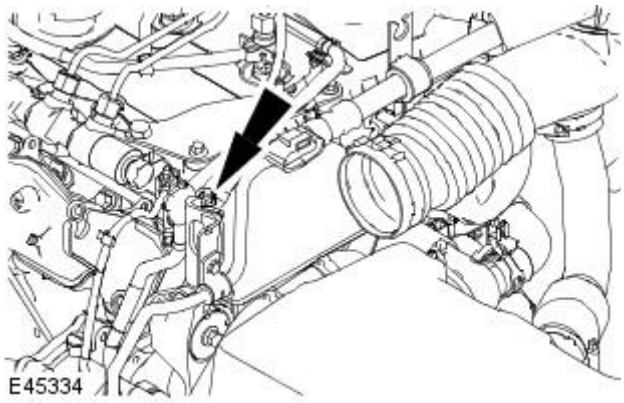

6. Install the power steering pump belt cover retaining nut.

- Tighten to 10 Nm.

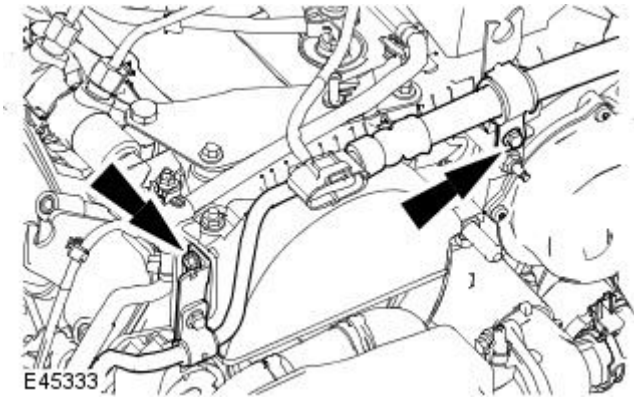

7. Attach the power steering fluid pipe.

8. Install the air cleaner assembly.
For additional information, refer to: Air Cleaner (303-12B Intake Air Distribution and Filtering - 2.0L Duratorq-TDCi/2.2L Duratorq-TDCi (110kW/150PS) - Puma, Removal and Installation).

Accessory Drive - Power Steering Pump Belt Tensioner2.0L Duratorq-TDCi / 2.2L Duratorq-TDCi (110kW / 150PS) - Puma

Removal and Installation

Removal

1. Remove the exhaust gas recirculation (EGR) cooler to EGR valve tube. For additional information, refer to: Exhaust Gas Recirculation (EGR) Cooler to EGR Valve Tube (303-08 Engine Emission Control - 2.0L Duratorq-TDCi/2.2L Duratorq-TDCi (110kW/150PS) - Puma, Removal and Installation).
2. Detach the power steering fluid pipe.

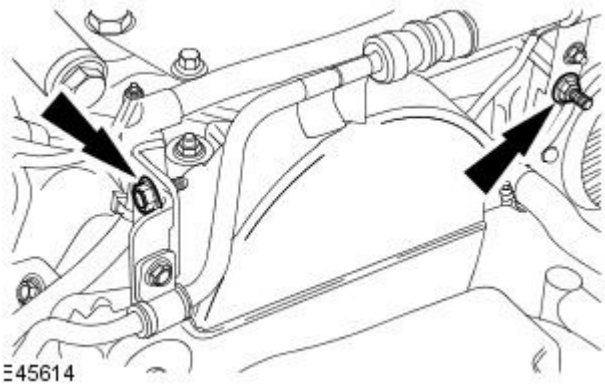

3. Remove the power steering pump belt cover retaining nut.

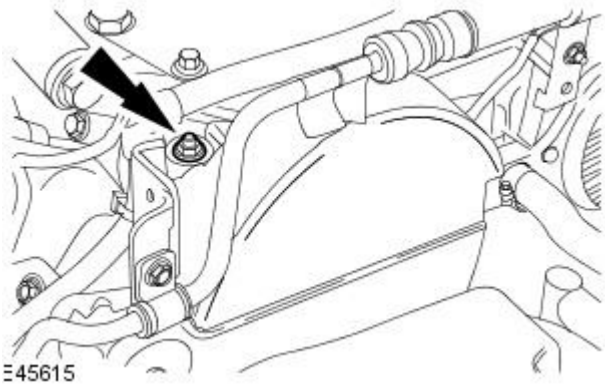

4. Remove the power steering pump belt cover.

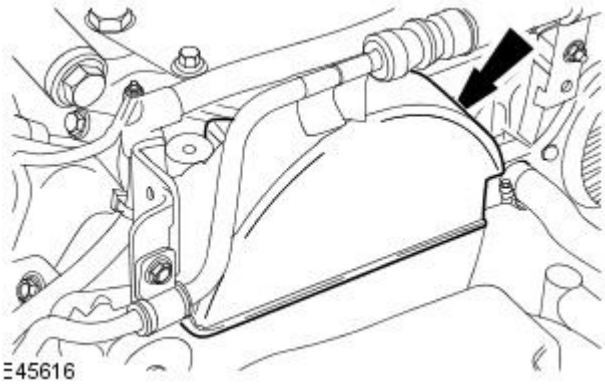

5. Detach the power steering pump belt.
   - Rotate the tensioner clockwise.

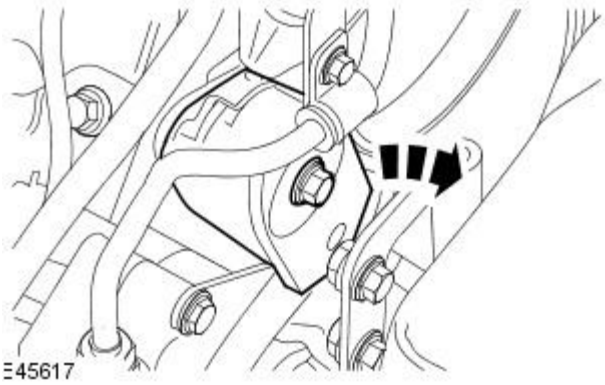

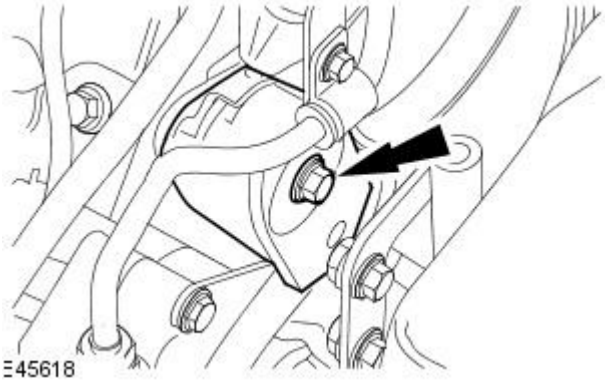

6. Remove the power steering pump belt tensioner.

Installation

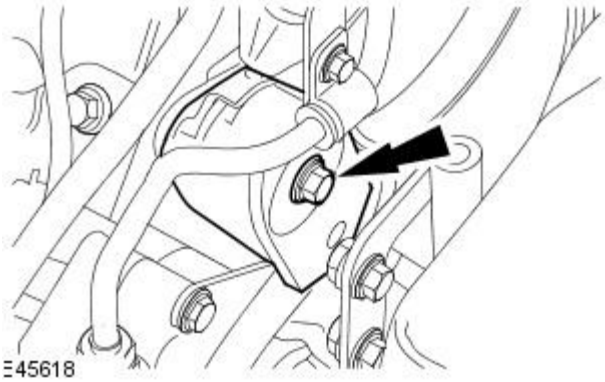

1. To install, reverse the removal procedure.

- Tighten to 23 Nm.

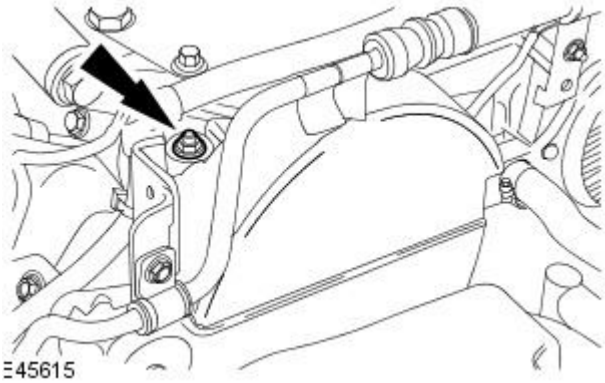

2. Tighten to 10 Nm.

Accessory Drive - Water Pump Belt2.0L NA V6 - AJV6 / 2.5L NA V6 - AJV6 / 3.0L NA V6 - AJ27

Removal and Installation

Removal

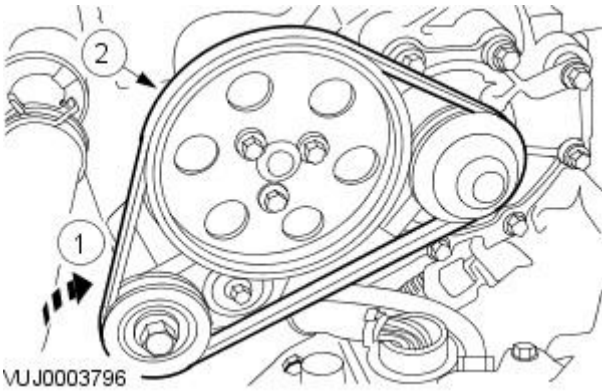

1. Remove the battery tray. For additional information, refer to Section 414-01 Battery, Mounting and Cables.
2. Remove the water pump belt.
    1. De-tension the water pump belt.
    2. Remove the water pump belt.

Installation

1. To install, reverse the removal procedure.

Accessory Drive - Water Pump Belt Tensioner2.0L NA V6 - AJV6 / 2.5L NA V6 - AJV6 / 3.0L NA V6 - AJ27

Removal and Installation

Removal

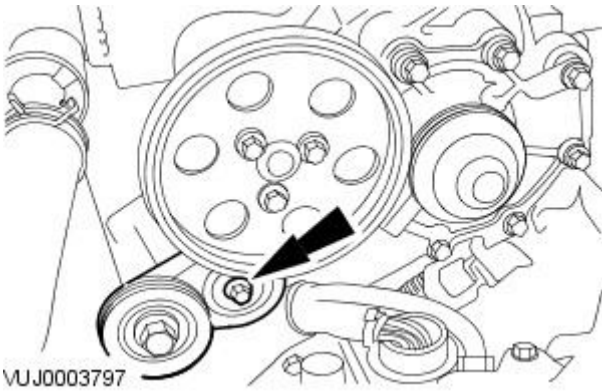

1. Remove the water pump belt. For additional information, refer to the Water Pump Belt.
2. Remove the water pump belt tensioner.

Installation

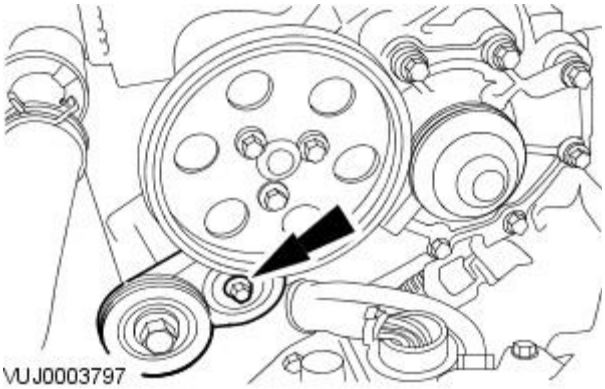

1. To install, reverse the removal procedure.
   - Tighten to 10 Nm.

Starting System -

Torque Specifications

Description	Nm	lb-ft	lb-in
Starter motor retaining bolts - vehicles with 2.0L, 2.5L or 3.0L engines	35	26	-
Starter motor cable retaining nut - vehicles with 2.0L, 2.5L or 3.0L engines	12	9	-
Solenoid cable retaining nut - vehicles with 2.0L, 2.5L or 3.0L engines	6	-	53
Starter motor retaining bolts - vehicles with 2.0L and 2.2L diesel engine	25	18	-
Starter motor electrical connector retaining nut - vehicles with 2.0L and 2.2L diesel engine	12	9	-
Starter motor solenoid electrical connector retaining nut - vehicles with 2.0L and 2.2L diesel engine	6	-	53
Vacuum solenoid valves and vacuum reservoir mount bracket securing bolts - vehicles with 2.0L and 2.2L diesel engine	23	17	-

Published: 11-May-2011

Starting System - Starting System

Description and Operation

The function of the starting system is to crank the engine fast enough to allow the engine to start. Heavy cables, connectors and switches are used in the system because of the large currents required.

The starting system consists of a pre-engaged type starter motor, battery, remote control switch (ignition switch) and relay. The operation of the starter relay is controlled by the engine control module (ECM).

To protect the starter motor from damage, the ECM prevents the starter from being engaged when the engine is running. This is done by the ECM inhibiting the starter relay operation.

Vehicles equipped with automatic transmission have a transmission range sensor attached to the circuit which prevents operation of the starter motor unless NEUTRAL or PARK are selected.

USA market vehicles equipped with manual transmission have a clutch pedal start inhibit switch which prevents operation of the starter motor unless the clutch pedal is operated.

The ECM will only operate the starter relay providing the following conditions are met:

- The ignition switch has been in the start position for a predetermined time
- The security response between the ECM and the instrument cluster (IC) has passed
- The engine is not running
- The transmission range switch is in the NEUTRAL or PARK position (vehicles fitted with automatic transmission)
- The clutch pedal is operated (USA vehicles fitted with manual transmission)

The starter relay remains energized until one of the following occur:

- The maximum cranking time is exceeded
- The ECM detects an engine running signal
- The ignition switch is no longer in the start position
- The transmission range switch is no longer in the NEUTRAL or PARK position (vehicles fitted with automatic transmission)
- The clutch pedal is released (USA vehicles fitted with manual transmission)
- The set engine speed is reached (vehicles with 2.0L engine)
- The vehicle is cranked for 30 seconds and the engine has failed to start

With the ignition switch in the start position, providing the ECM start conditions are met, the starter relay is energized and the engagement lever moves the pinion into mesh with the engine ring gear teeth. The electrical contacts within the solenoid complete the high power circuit and the starter motor operates to turn the engine.

The sequence of operation is as follows:

- Ignition switch in the start position
- Starter relay activated by the ECM
- Voltage provided to the starter motor solenoid
- Starter solenoid engages the drive pinion to the ring gear
- Starter solenoid switches the battery current to the starter motor
- The starter remains engaged until the ECM start conditions are no longer met

Vehicles with 2.0L, 2.5L or 3.0L engines

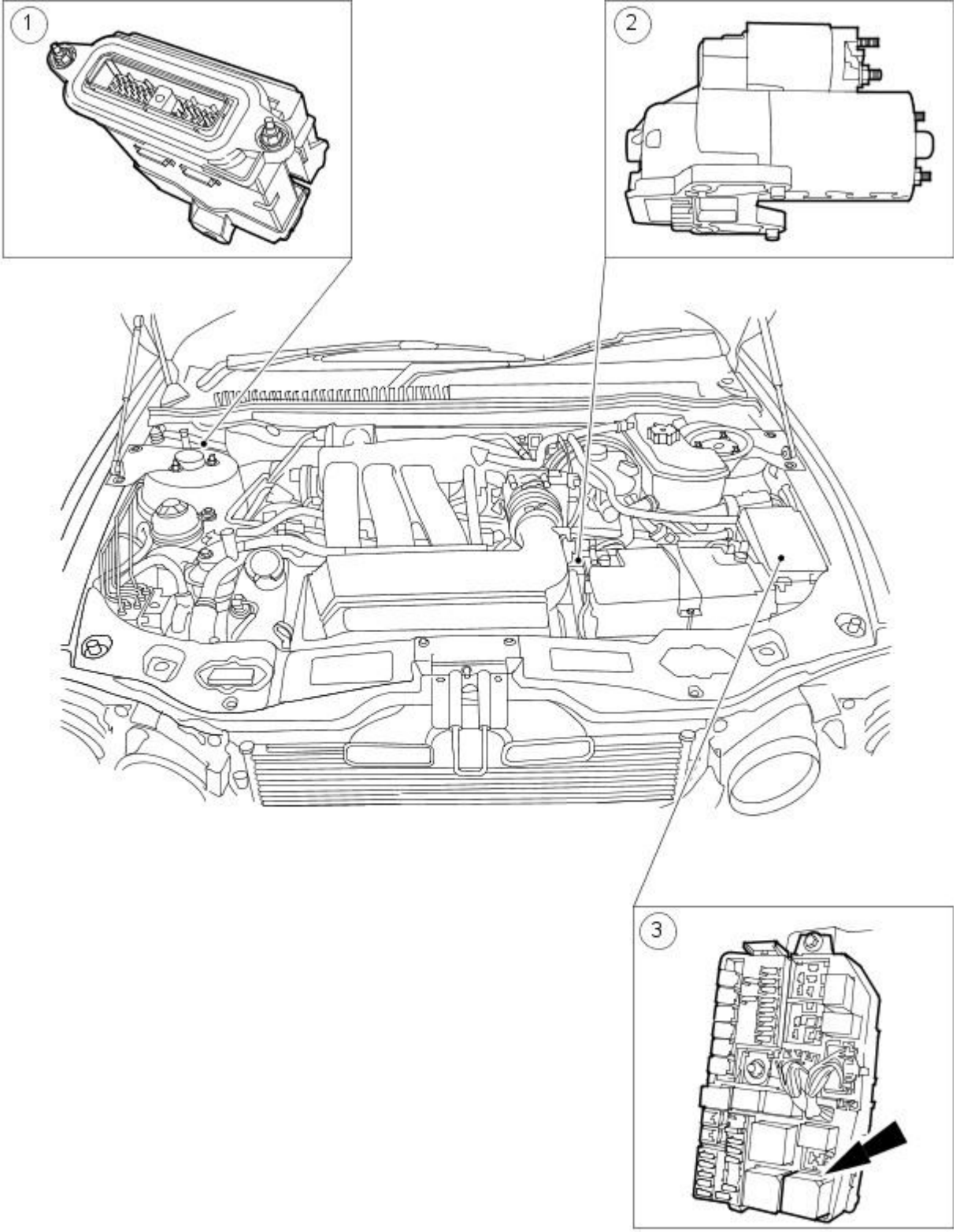

VUJ0003535

Item	Part Number	Description
1	—	Engine control module (ECM)
2	—	Starter motor
3	—	Starter motor relay

Vehicles with 2.0L and 2.2L diesel engines

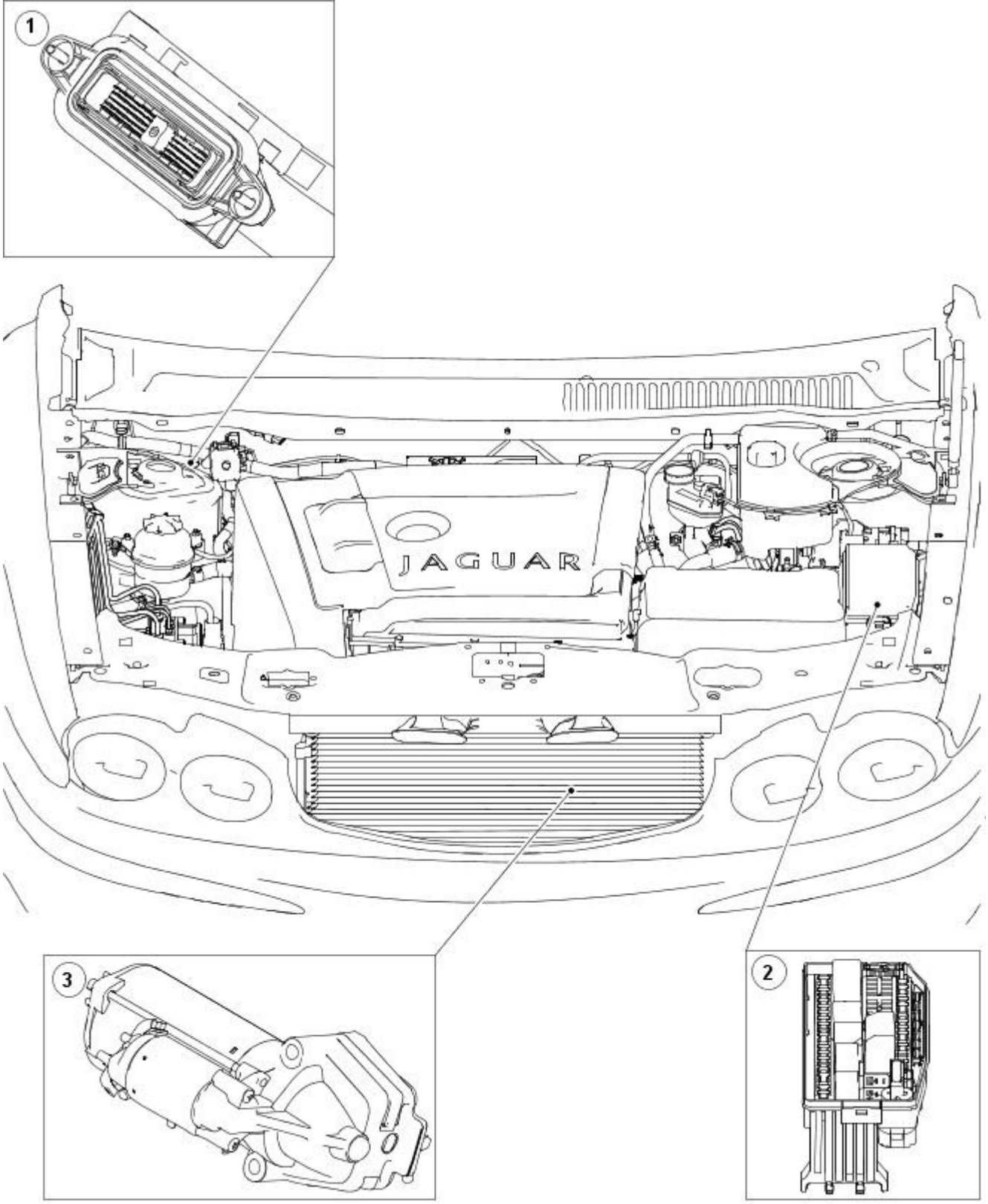

E44289

Item	Part Number	Description
1	—	Engine control module (ECM)
2	—	Starter motor relay
3	—	Starter motor

Starting System - Starting System2.0L NA V6 - AJV6

Diagnosis and Testing

WARNING: Beware of rotating parts. Failure to follow these instructions may result in personal injury.

1. **1.** Visually inspect for obvious signs of mechanical and electrical damage.
2. **2.** Verify the customer concern by operating the system.
3. **3.** Make sure the vehicle is in NEUTRAL or PARK for automatic vehicles, NEUTRAL for manual vehicles.

Mechanical	Electrical
• Starter Motor • Flywheel Ring Gear • Engine Seized	• Starter Motor • Battery • Fuse 28 (30A) • Fuse 29 (30A) • Fuse 92 (10A) • Starter relay • Transmission range switch • Wiring harness(es) • Damaged, loose or corroded connectors • Engine control module (ECM)

4. **4.** If an obvious cause for an observed or reported concern is found, correct the cause, (if possible) before proceeding to the next step.
5. **5.** The DTC summaries are generated to support the Jaguar approved diagnostic system, but also provide the basis for diagnosis of OBD related concerns using a suitable generic scan tool, in conjunction with the electrical guides. Until the DTC summaries and electrical guides are available, the starting system can only be diagnosed using the Jaguar approved diagnostic system, other than basic electrical faults. For additional information, refer to Dealer technical support.

Starting System - Starting System2.5L NA V6 - AJV6 / 3.0L NA V6 - AJ27

Diagnosis and Testing

1. **1.** Verify the customer concern by operating the system.
2. **2.** Visually inspect for obvious signs of mechanical or electrical damage.
3. **3.** Make sure the vehicle is in NEUTRAL or PARK for automatic vehicles, NEUTRAL for manual vehicles.
4. **4.** Make sure the clutch pedal is fully depressed for Federal manual vehicles.

Visual Inspection Chart

Mechanical	Electrical
• Starter Motor • Flywheel Ring Gear • Engine Seized	• Starter Motor • Battery • Fuse 28 (15A) • Fuse 29 (30A) • Fuse 92 (10A) • Starter relay • Transmission range switch • Clutch switch; manual transmission (USA only) • Wiring harness(es) • Damaged, loose or corroded connectors • Engine control module (ECM)

5. **5.** If an obvious cause for an observed or reported concern is found, correct the cause, (if possible) before proceeding to the next step.
6. **6.** If the concern is not visually evident, verify the symptom and refer to the Symptom Chart.

Symptom Chart

DTC	Condition	Possible Sources	Action
P0616, P0617	The engine does not crank.	• Battery. • Circuit. • Starter motor. • Relay. • Inertia switch. • Ignition switch. • Transmission range switch (automatic transmission). • Clutch switch; manual transmission (USA only).	GO to Pinpoint Test A.
None.	The engine cranks slowly.	• Battery. • Circuit. • Starter motor.	GO to Pinpoint Test B.
None.	Unusual starter motor noise.	• Starter motor. • Flywheel ring gear.	INSPECT flywheel ring gear. For additional information, REFER to Section 303-00 Engine System - General Information. INSPECT starter motor for alignment, cracked case. Make sure the mounting bolts are tightened. If necessary, INSTALL a new starter motor.
None.	The starter spins, but the engine does not crank.	• Starter motor. • Flywheel ring gear.	INSPECT the flywheel ring gear for missing teeth. REFER to Section 303-00 Engine System - General Information. INSPECT starter motor pinion gear for missing teeth. CHECK starter motor for correct mounting. If concern persists, INSTALL a new starter motor.

PINPOINT TEST A : P0616, P0617. THE ENGINE DOES NOT CRANK

WARNING: Beware of rotating parts. Failure to follow these instructions may result in personal injury.

• NOTE: Make sure the vehicle is in NEUTRAL or PARK for automatic vehicles, NEUTRAL for manual vehicles. Make sure the clutch pedal is fully depressed for Federal manual vehicles.

• NOTE: Check that the inertia switch has not tripped.

TEST CONDITIONS	DETAILS/RESULTS/ACTIONS
A1: CHECK THE BATTERY	
	1 Check the battery. For additional information. REFER to Section 414-00 Battery and Charging System - General Information.
	Is the battery OK? **Yes** GO to A2. **No** INSTALL a new battery. REFER to Section 414-01 Battery, Mounting and Cables. CLEAR the DTC. TEST the system for normal operation.
A2: CHECK THE STARTER RELAY	
	1 Turn the ignition switch to the CRANK position.
	Does the starter relay make an audible click? **Yes** GO to A16. **No** GO to A3.
A3: CHECK FOR CRANK SUPPLY VOLTAGE TO STARTER RELAY	
	1 Remove the starter relay.
	2 Turn the ignition switch to the CRANK position, and hold.
	3 Measure the voltage between terminal 1 of the relay base and GROUND.

	Is the voltage greater than 10 volts? **Yes** GO to A20. **No** GO to A4.
A4: CHECK FOR CRANK SUPPLY VOLTAGE TO ECM	
	1 Disconnect the ECM electrical connector EN16.
	2 Turn the ignition switch to the CRANK position, and hold.
	3 Measure the voltage between EN16 pin 6 (Y) and GROUND.
	Is the voltage greater than 10 volts? **Yes** GO to A6. **No** GO to A5.
A5: CHECK FUSE 28 IN THE ENGINE COMPARTMENT FUSE BOX.	
	1 Check the fuse.
	Is the fuse OK? **Yes** CHECK and repair the circuit including the power distribution fuse box, the starter relay base pin 1 and EN16 pin 6. For additional information, refer to wiring diagrams. CLEAR the DTC. TEST the system for normal operation. (This circuit includes the ignition switch) **No** INSTALL a new fuse. TEST the circuit for cause of fuse failure.GO to A6.
A6: CHECK ECM GROUND SIGNAL TO STARTER RELAY	
	1 Connect the ECM electrical connector EN16.
	2 Turn the ignition switch to the CRANK position.
	3 Measure the resistance between terminal 2 of the relay base and GROUND.
	Is the resistance less than 5 ohms? **Yes** INSTALL a new starter relay. For additional information, refer to the Electrical guide. CLEAR the DTC. TEST the system for normal operation. **No** GO to A7.
A7: CHECK ECM GROUND SIGNAL CIRCUIT FOR CONTINUITY	
	1 Disconnect the ECM electrical connector EN16.
	2 Measure the resistance between terminal 2 of the starter relay base and EN16 pin 41 (GO).
	Is the resistance less than 5 ohms? **Yes** Automatic transmission vehicles.GO to A8. Manual transmission vehicles.GO to A12. Federal spec. manual transmission vehicles.GO to A13. **No** REPAIR the circuit between the starter relay and the ECM. For additional information, refer to wiring diagrams. CLEAR the DTC. TEST the system for normal operation.
A8: CHECK FOR IGNITION VOLTAGE TO TRANSMISSION RANGE SENSOR	
	1 Turn the ignition switch to the ON position.
	2 Measure the voltage between JB156 pin 10 and GROUND.
	Is the voltage greater than 10 volts? **Yes** GO to A11. **No** GO to A9.
A9: CHECK FUSE 92 IN THE CENTRAL JUNCTION FUSE BOX	
	1 Check the fuse.
	Is the fuse OK? **Yes** Repair the circuit between the power distribution fuse box and the transmission range switch. For additional information, refer to wiring diagrams. CLEAR the DTC. TEST the system for normal operation. (This circuit includes the central junction fuse box, inertia switch, ignition switch, ignition relay, and power distribution fuse box (Fuse 28, See test A5)) **No** INSTALL a new fuse. TEST the circuit for cause of fuse failure. CLEAR the DTC. TEST the system for normal operation.
A10: CHECK THE CIRCUIT BETWEEN TRANSMISSION RANGE SENSOR AND ECM FOR CONTINUITY	
	1 Measure the resistance between EN16 pin 31 (B) and JB156 pin 6 (B).
	Is the resistance less than 5 ohms? **Yes** GO to A11. **No** REPAIR the circuit between EN16 pin 31 (B) and JB156 pin 6 (B). For additional information, refer to wiring diagrams. CLEAR the DTC. TEST the system for normal operation.
A11: CHECK THE TRANSMISSION RANGE SENSOR	
	1 Disconnect the transmission range sensor electrical connector JB156.
	2 Select PARK or NEUTRAL.
	3 Measure the resistance between pins 6 and 10 of the TR sensor.
	Is the resistance less than 5 ohms? **Yes** INSTALL a new ECM. REFER to Section 303-14A Electronic Engine Controls / 303-14B Electronic Engine Controls. Before replacing a ECM, contact Dealer technical support. **No** INSTALL a new transmission range sensor. REFER to Section 307-01A Automatic Transmission/Transaxle / 307-01B Automatic Transmission/Transaxle. CLEAR the DTC. TEST the system for normal operation.
A12: CHECK FOR IGNITION VOLTAGE TO ECM	
	1 Turn the ignition switch to the ON position.
	2 Measure the voltage between EN16 pin 31 (B) and GROUND.

	Is the voltage greater than 10 volts? **Yes** INSTALL a new ECM. REFER to Section 303-14A Electronic Engine Controls / 303-14B Electronic Engine Controls. Before replacing a ECM, contact Dealer technical support. **No** REPAIR the circuit between the ECM and the power distribution fuse box. For additional information, refer to wiring diagrams. CLEAR the DTC. TEST the system for normal operation. (This circuit includes the central junction fuse box, inertia switch, ignition switch, ignition relay, and power distribution fuse box (Fuse 28, See test A5))
A13: CHECK FOR IGNITION VOLTAGE TO CLUTCH SWITCH; MANUAL TRANSMISSION (USA ONLY)	
	1 Turn the ignition switch to the ON position.
	2 Measure the voltage between the clutch switch electrical connector PA5 pin 1 (B) and GROUND.
	Is the voltage greater than 10 volts? **Yes** GO to A15. **No** Repair the circuit between the power distribution fuse box and the clutch switch. For additional information, refer to wiring diagrams. CLEAR the DTC. TEST the system for normal operation. (This circuit includes the central junction fuse box, inertia switch, ignition switch, and power distribution fuse box (Fuse 28, See test A5))
A14: CHECK THE CLUTCH SWITCH CIRCUIT FOR CONTINUITY; MANUAL TRANSMISSION (USA ONLY).	
	1 Disconnect the clutch switch electrical connector PA5.
	2 Disconnect the ECM electrical connector EN16.
	3 Measure the resistance between PA5 pin 2 (W) and EN16 pin 31 (B).
	Is the resistance less than 5 ohms? **Yes** GO to A15. **No** REPAIR the circuit between PA5 pin 2 (W) and EN16 pin 31 (B). For additional information, refer to wiring diagrams. CLEAR the DTC. TEST the system for normal operation.
A15: CHECK THE CLUTCH SWITCH; MANUAL TRANSMISSION (USA ONLY).	
	1 Measure the resistance between PA5 pins 1 and 2.
	2 Operate the clutch pedal while observing the ohmmeter reading.
	Does the resistance switch between 0 ohms and 10,000 ohms as the pedal is operated? **Yes** INSTALL a new ECM. REFER to Section 303-14A Electronic Engine Controls / 303-14B Electronic Engine Controls. Before replacing a ECM, contact Dealer technical support. **No** INSTALL a new clutch switch. CLEAR the DTC. TEST the system for normal operation.
A16: CHECK THE STARTER SOLENOID INPUT	
• NOTE: The starter motor will disengage once a start is detected by the ECM.	
	1 Turn the ignition switch to the CRANK position.
	2 Measure the voltage between starter motor connector ST3 and GROUND.
	Is the voltage greater than 10 volts? **Yes** GO to A20. **No** GO to A17.
A17: CHECK THE STARTER SOLENOID INPUT CIRCUIT FOR CONTINUITY	
	1 REMOVE the starter relay.
	2 Disconnect starter motor connector ST3
	3 Measure the resistance between ST3 and pin 5 of the starter relay base.
	Is the resistance less than 5 ohms? **Yes** GO to A18. **No** REPAIR the circuit between ST3 and pin 5 of the starter relay base. For additional information, refer to wiring diagrams. CLEAR the DTC. TEST the system for normal operation.
A18: CHECK THE STARTER RELAY BASE PIN 3 FOR PERMANENT SUPPLY	
	1 Measure the voltage between the starter relay base pin 3 and GROUND.
	Is the voltage greater than 10 volts? **Yes** GO to A20. **No** GO to A19.
A19: CHECK FUSE 29 OF THE POWER DISTRIBUTION FUSE BOX	
	1 Check the fuse.
	Is the fuse OK? **Yes** REPAIR the circuit between the starter relay base pin 3 and the battery. For additional information, refer to wiring diagrams. CLEAR the DTC. TEST the system for normal operation. **No** INSTALL a new fuse. Check the circuit for cause of fuse failure. CLEAR the DTC. TEST the system for normal operation.
A20: CHECK THE STARTER FOR BATTERY VOLTAGE	
	1 Measure the voltage between the starter connector ST2 and GROUND.
	Is the voltage greater than 10 volts? **Yes** GO to A21. **No** REPAIR the starter motor permanent live supply circuit. For additional information, refer to wiring diagrams. CLEAR the DTC. TEST the system for normal operation.
A21: CHECK THE STARTER GROUND	
	1 Measure the resistance between starter outer casing and GROUND.
	Is the resistance less than 2 Ohms? **Yes** INSTALL a new starter motor. REFER to Section 303-06 Starting System. CLEAR the DTC. TEST the system for normal operation.

	No REPAIR starter GROUND strap or connections. For additional information, refer to wiring diagrams. CLEAR the DTC. TEST the system for normal operation.

PINPOINT TEST B : THE ENGINE CRANKS SLOWLY	
TEST CONDITIONS	**DETAILS/RESULTS/ACTIONS**
B1: CHECK FOR VOLTAGE DROP	
WARNING: Beware of rotating parts. Failure to follow these instructions may result in personal injury.	
• NOTE: The starter motor will disengage once a start is detected by the ECM.	
• NOTE: Check battery condition before commencing this test.GO to Pinpoint Test A.	
	1 Turn the ignition switch to the CRANK position, and hold.
	2 Measure the voltage between the starter motor permanent voltage supply terminal and the positive battery terminal while cranking.
	Is the voltage less than 0.5 volts? **Yes** Turn the ignition switch to the OFF position. GO to B2. **No** CLEAN and TIGHTEN all positive battery cable connections. TEST the system for normal operation. If the concern persists, INSTALL a new positive battery cable. REFER to Section 414-01 Battery, Mounting and Cables.
B2: CHECK FOR GROUND CONNECTION VOLTAGE DROP	
	1 Turn the ignition switch to the CRANK position, and hold.
	2 Measure the voltage between the starter motor case and the battery negative terminal.
	Is the voltage less than 0.5 volts? **Yes** INSTALL a new starter motor. REFER to Section 303-06 Starting System. TEST the system for normal operation. **No** CLEAN and TIGHTEN all negative battery cable connections, starter motor mounting and starter motor GROUND cable. TEST the system for normal operation. If the concern persists, INSTALL a new negative battery cable. REFER to Section 414-01 Battery, Mounting and Cables.

Starting System - Starter Motor2.0L Duratorq-TDCi

Removal and Installation

Removal

1. Disconnect the battery.
   For additional information, refer to: Battery Disconnect and Connect (414-01 Battery, Mounting and Cables, General Procedures).
2. Remove the air deflector.
   For additional information, refer to: Air Deflector - 2.0L Duratorq-TDCi/2.2L Duratorq-TDCi (110kW/150PS) - Puma (501-02 Front End Body Panels, Removal and Installation).
3. Disconnect the vacuum pipes from the vacuum solenoid valves and the vacuum reservoir.

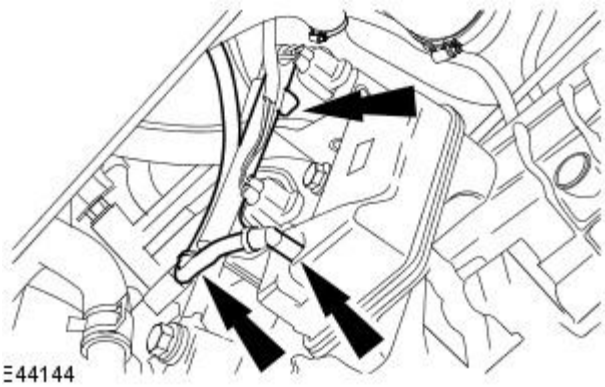

4. Disconnect the vacuum solenoid valves electrical connectors.

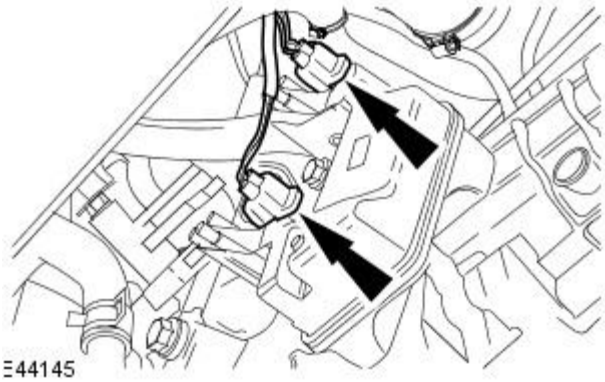

5. Detach the wiring harness from the vacuum solenoids and vacuum reservoir mount bracket.

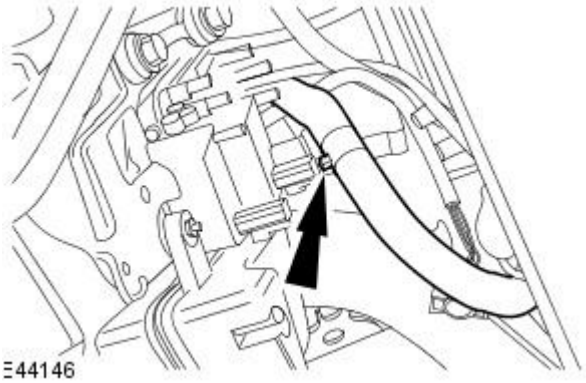

6. Remove the vacuum solenoids and vacuum reservoir mount bracket assembly.

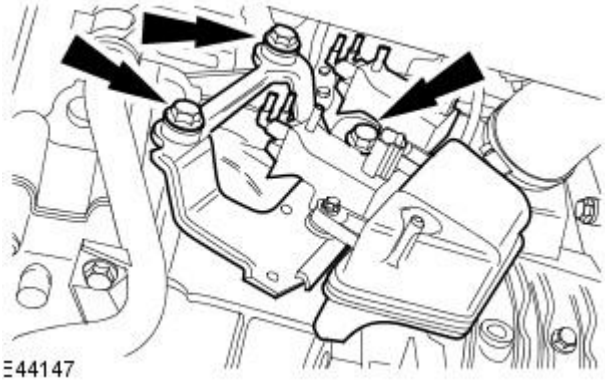

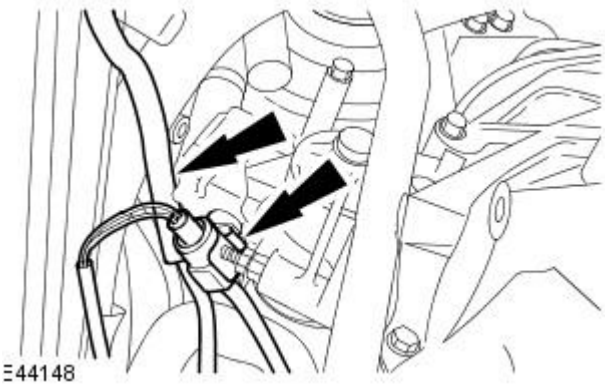

7. Detach the wiring harness retaining clips from the wiring harness support bracket.

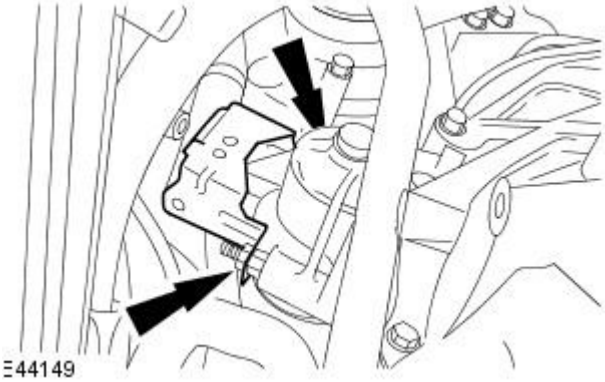

8. Remove the wiring harness support bracket.

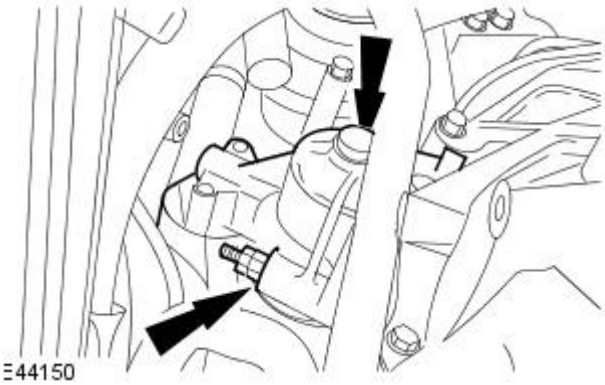

9. Detach the starter motor.

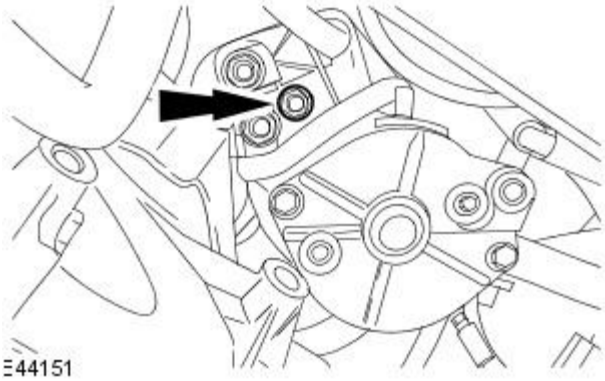

10. Position the starter motor to provide access to the starter motor cables.

11. Remove the starter motor solenoid cover and electrical connector retaining nut.

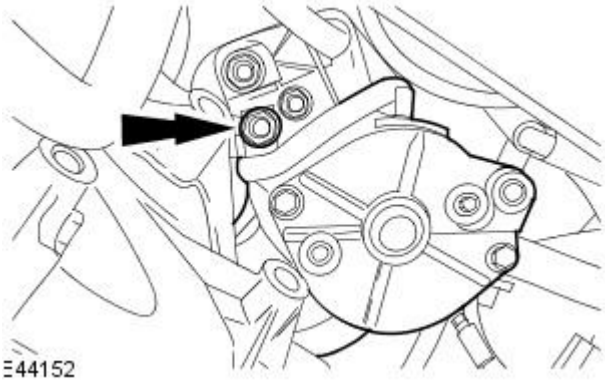

12. Remove the starter motor.

- Remove the starter motor electrical connector retaining nut.

Installation

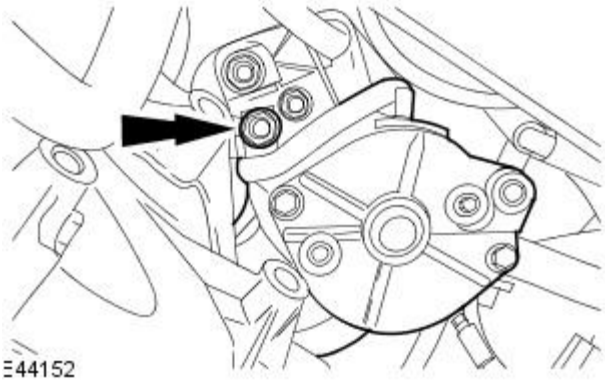

1. To install, reverse the removal procedure.

- Tighten to 12 Nm.

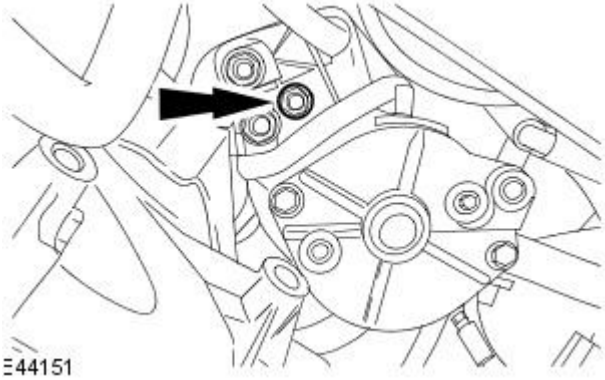

2. Tighten to 6 Nm.

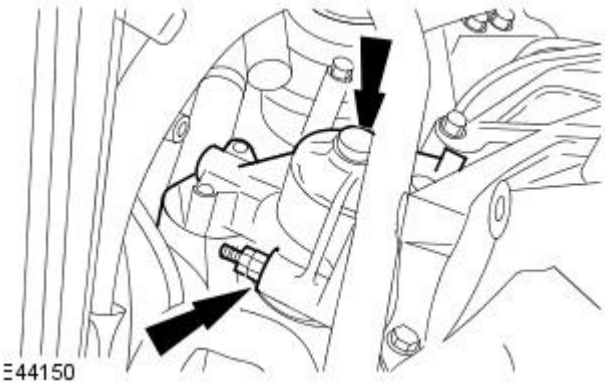

3. Tighten to 25 Nm.

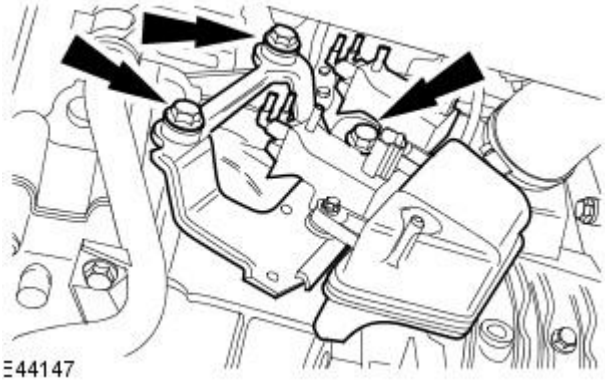

4. Tighten to 23 Nm.

Starting System - Starter Motor2.2L Duratorq-TDCi (110kW/150PS) - Puma

Removal and Installation

Removal

1. Disconnect the battery.
   For additional information, refer to: Battery Disconnect and Connect (414-01 Battery, Mounting and Cables, General Procedures).
2. Remove the air deflector.
   For additional information, refer to: Air Deflector - 2.0L Duratorq-TDCi/2.2L Duratorq-TDCi (110kW/150PS) - Puma (501-02 Front End Body Panels, Removal and Installation).
3. Reposition the starter motor solenoid cover.

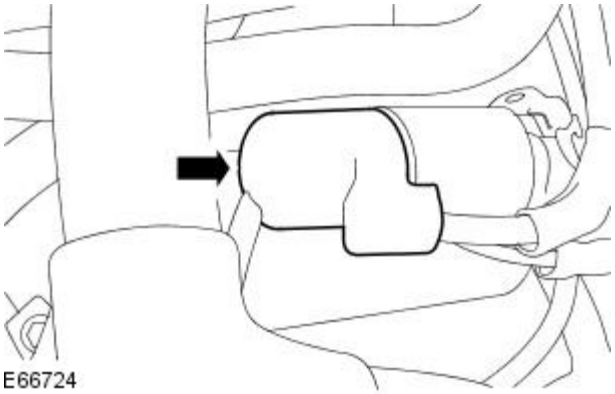

4. Remove the starter motor electrical connector retaining nut.
   - Disconnect the electrical connector.

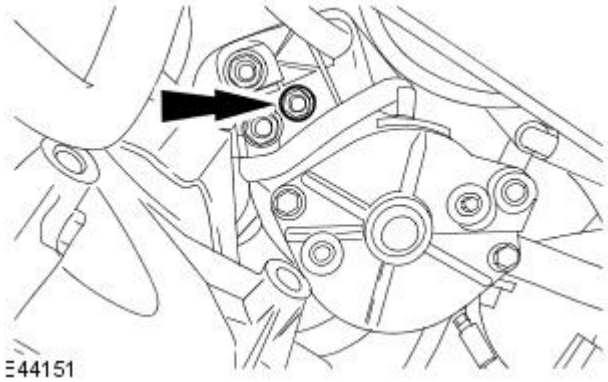

5. Remove the starter motor electrical connector retaining nut.
   - Disconnect the electrical connector.

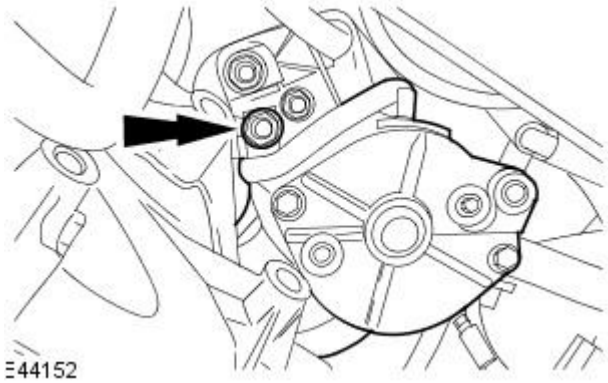

6. Detach the wiring harness retaining clips from the wiring harness support bracket.

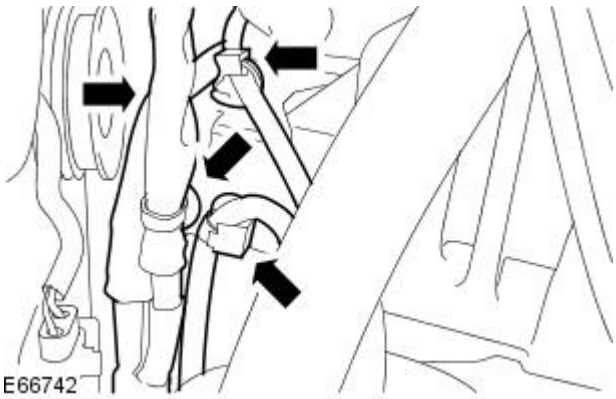

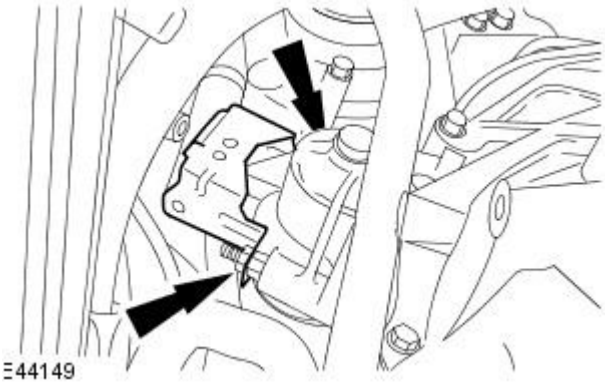

7. Remove the wiring harness support bracket.

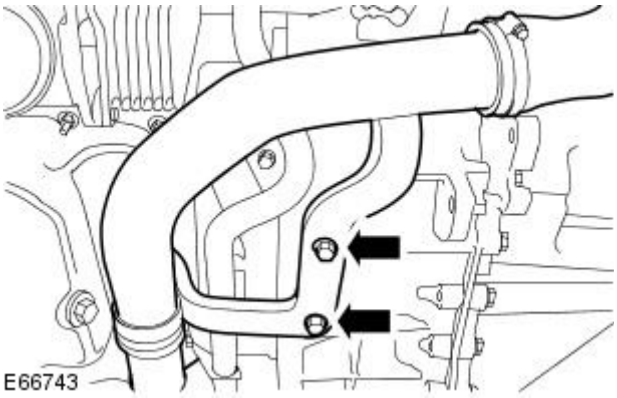

8. Remove the charge air cooler intake pipe retaining bolts.

- Reposition the charge air cooler intake pipe for access.

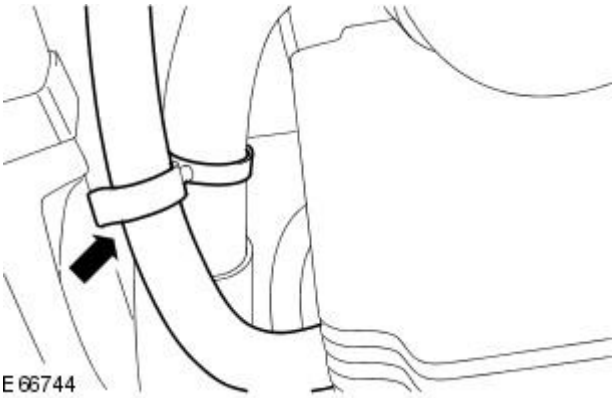

9. Detach the coolant hose.

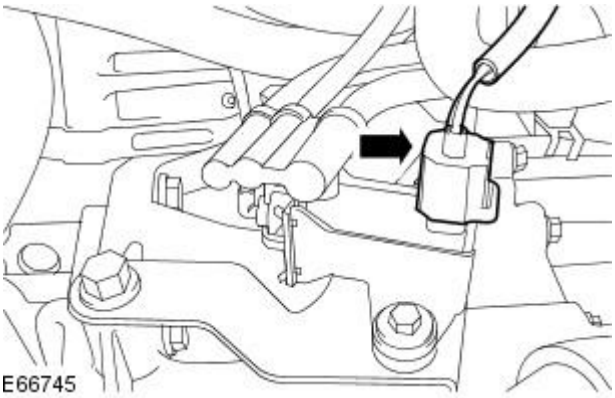

10. Disconnect the vacuum solenoid valve electrical connector.

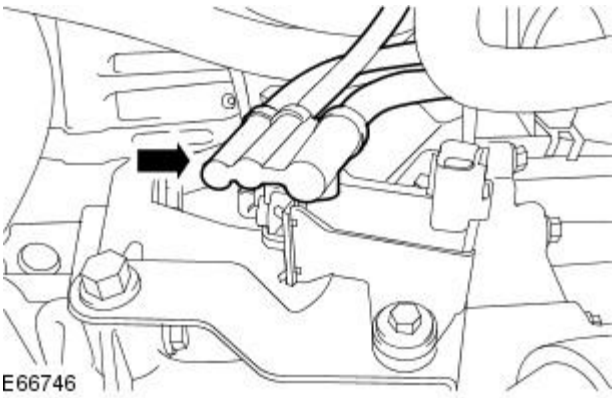

11. Disconnect the vacuum pipes from the vacuum solenoid valve.

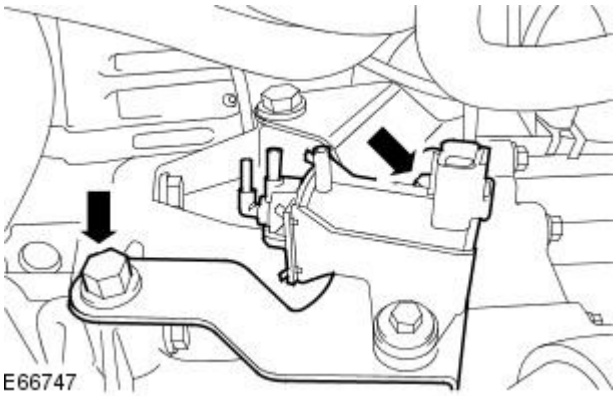

12. Remove the vacuum solenoid mount bracket assembly.

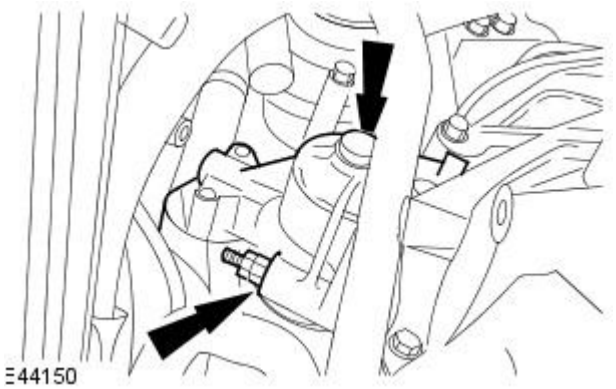

13. Remove the starter motor.

Installation

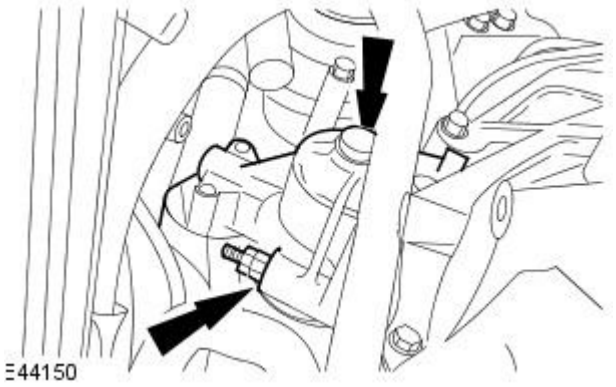

1. To install reverse the removal procedure.

- Tighten to 25 Nm.

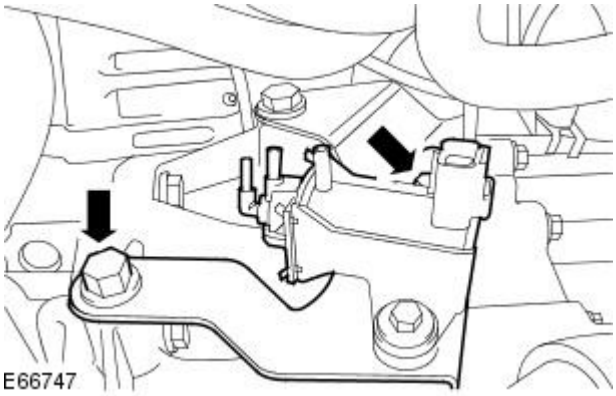

2. Tighten to 30 Nm.

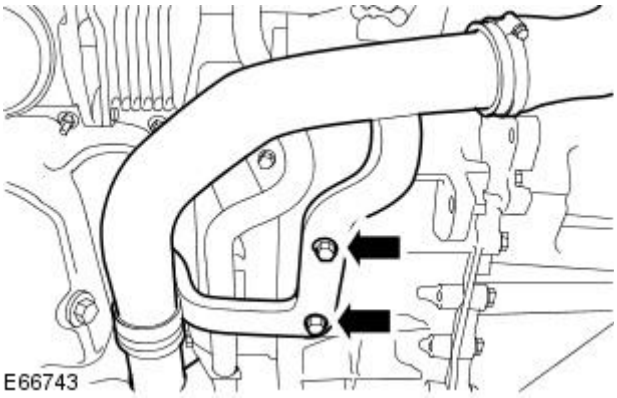

3. Tighten to 35 Nm.

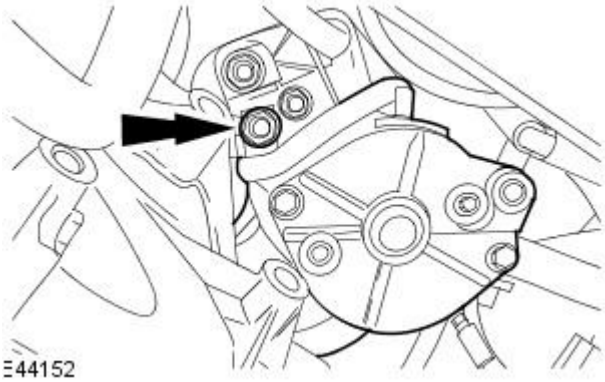

4. Tighten to 12 Nm.

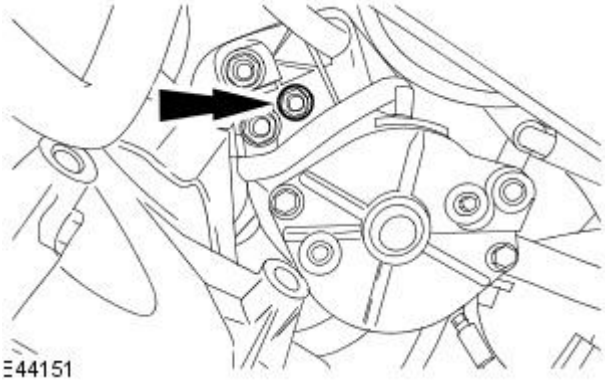

5. Tighten to 6 Nm.

Starting System - Starter Motor2.0L NA V6 - AJV6 / 2.5L NA V6 - AJV6 / 3.0L NA V6 - AJ27

Removal and Installation

Special Tool(s)	
	Powertrain assembly jack HTJ1200-2

Removal

1. Disconnect the battery ground cable. For additional information, refer to Section 414-01 Battery, Mounting and Cables.
2. Raise and support the vehicle.
   For additional information, refer to Section 100-02 Jacking and Lifting.
3. Install the special tool.

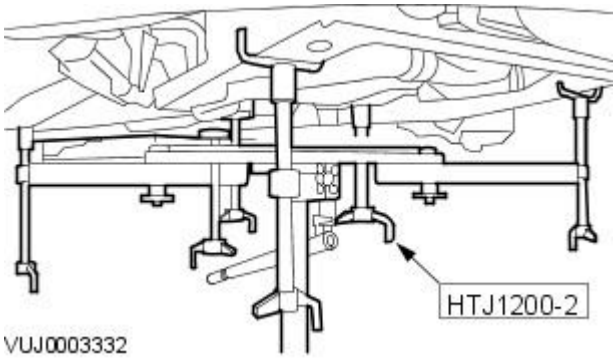

4. Position and adjust the special tool rear height adjuster.
   - Left-hand shown, right-hand similar.

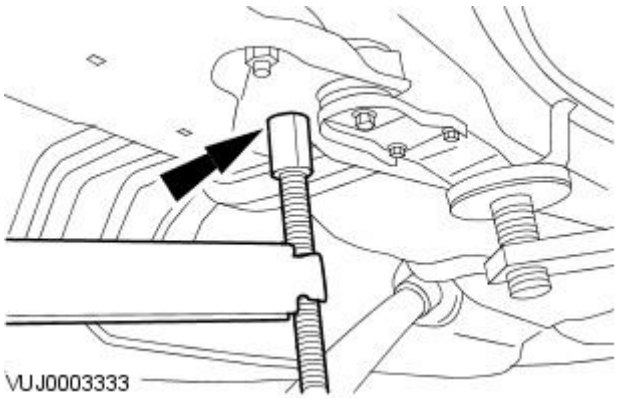

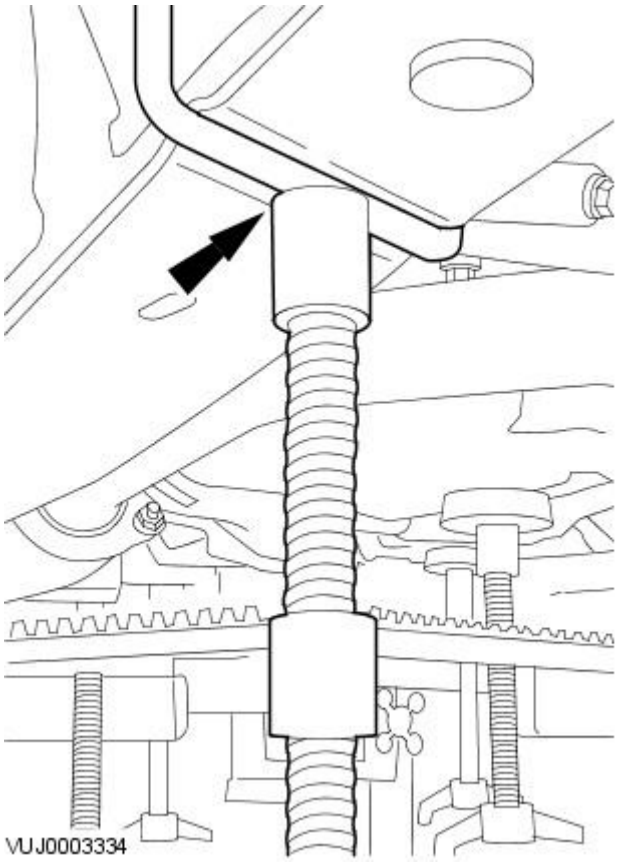

5. Position and adjust the special tool front height adjuster.

- Right-hand shown, left-hand similar.

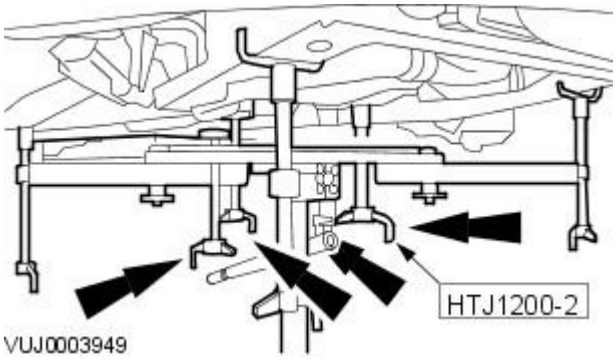

6. Position and adjust the special tool engine height adjusters.

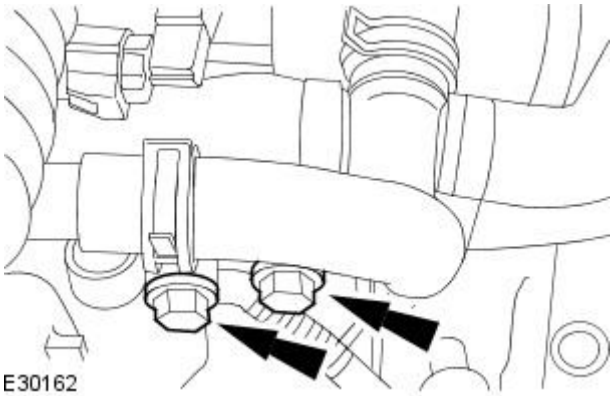

7. Detach the support bar.

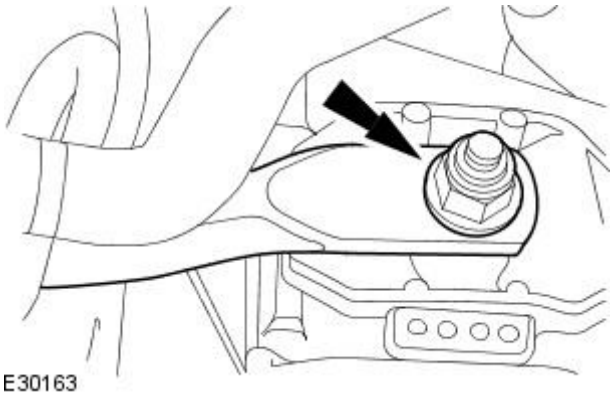

8. Remove the support bar.

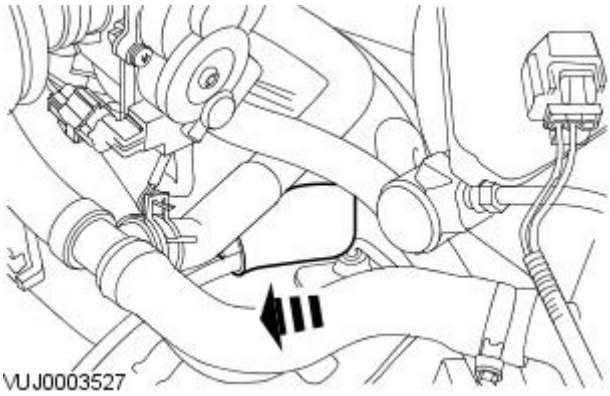

9. Detach the starter motor solenoid cover.

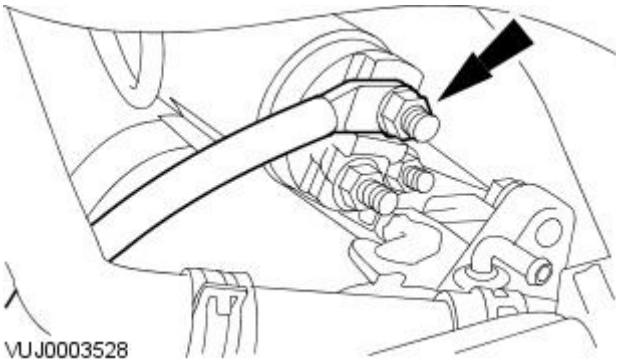

10. Disconnect the starter motor electrical connector.

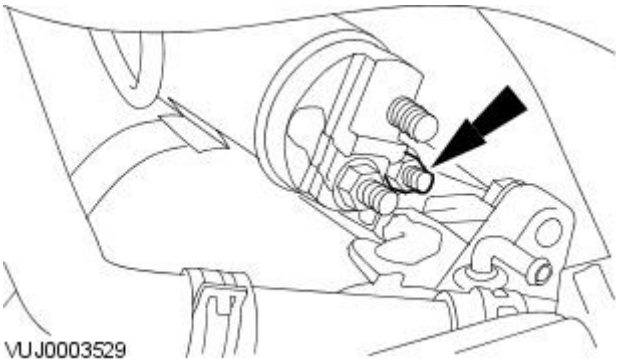

11. Disconnect the starter motor solenoid electrical connector.

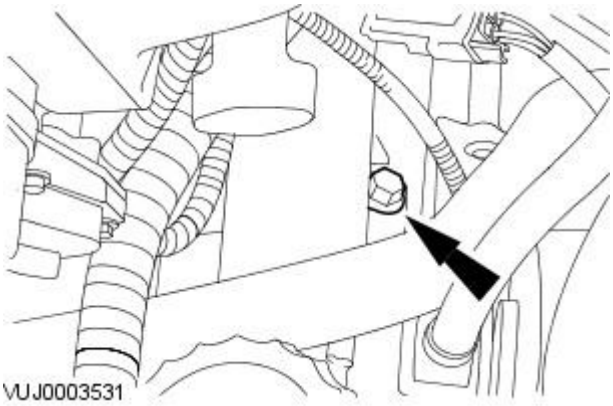

12. Remove the starter motor rear retaining bolt.

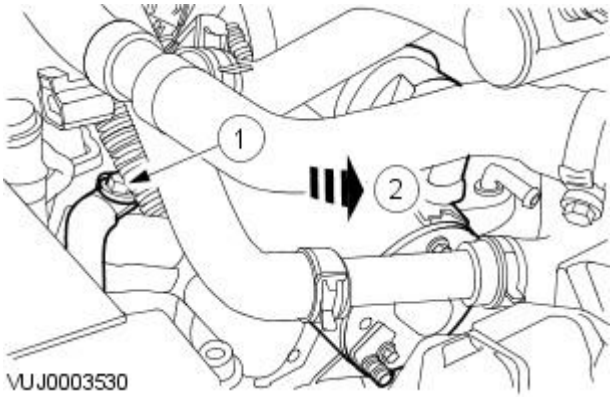

13. Remove the starter motor.

1. Remove the starter motor front retaining bolt.
2. Remove the starter motor.

Installation

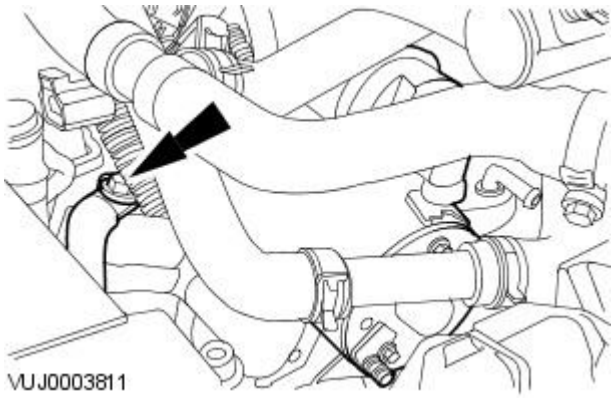

1. To install, reverse the removal procedure.

- Tighten to 35 Nm.

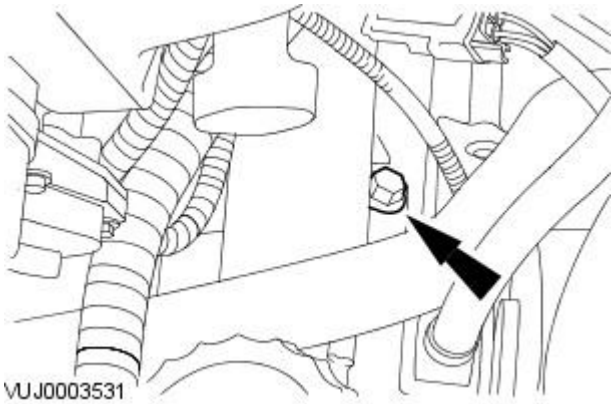

2. Tighten to 35 Nm.

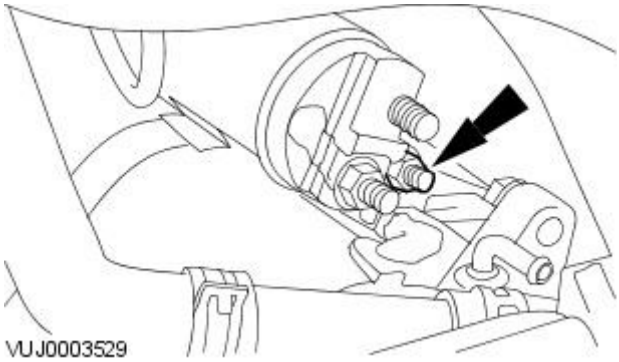

3. Tighten to 6 Nm.

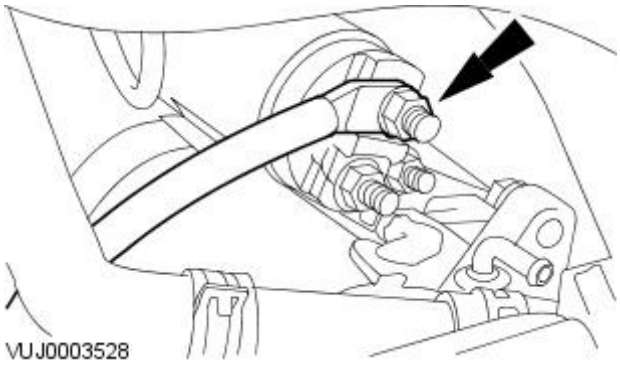

4. Tighten to 12 Nm.

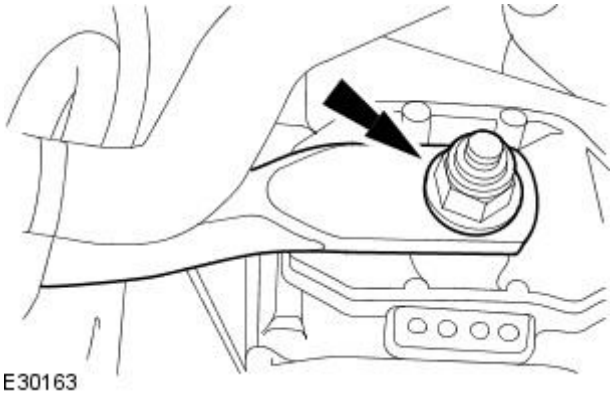

5. Tighten to 133 Nm.

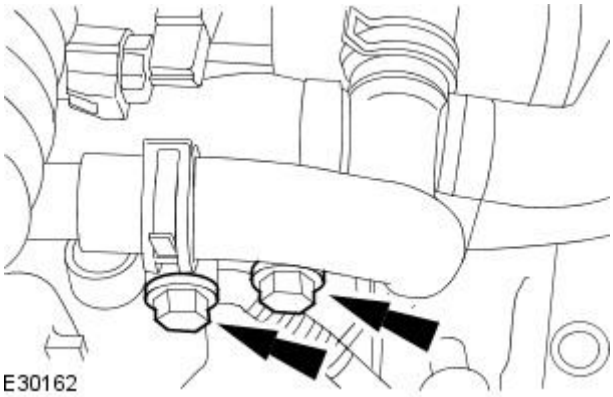

6. Tighten to 25 Nm.

Published: 11-May-2011

Engine Ignition - 2.0L NA V6 - AJV6 / 2.5L NA V6 - AJV6 / 3.0L NA V6 - AJ27 -

General Specifications

Item	Specification
Firing Order	1,4,2,5,3,6
Spark Plug Gap mm (in)	1.3-1.45 (0.051-0.057)
Spark Plug Type	XW4E-12405
Silicone Dielectric Compound D7AZ-19A331-A (Spark Plug Connector)	ESE-M1C171-A
High Temperature Nickel Anti-Seize Lubricant F6AZ-9L494-AA (Spark Plug Thread)	ESE-M12A4-A

Torque Specifications

Description	Nm	lb-ft
Spark plugs	15	11
Ignition coil retaining bolts	6	4

Engine Ignition - 2.0L NA V6 - AJV6 / 2.5L NA V6 - AJV6 / 3.0L NA V6 - AJ27 - Engine Ignition

Description and Operation

Component Locations

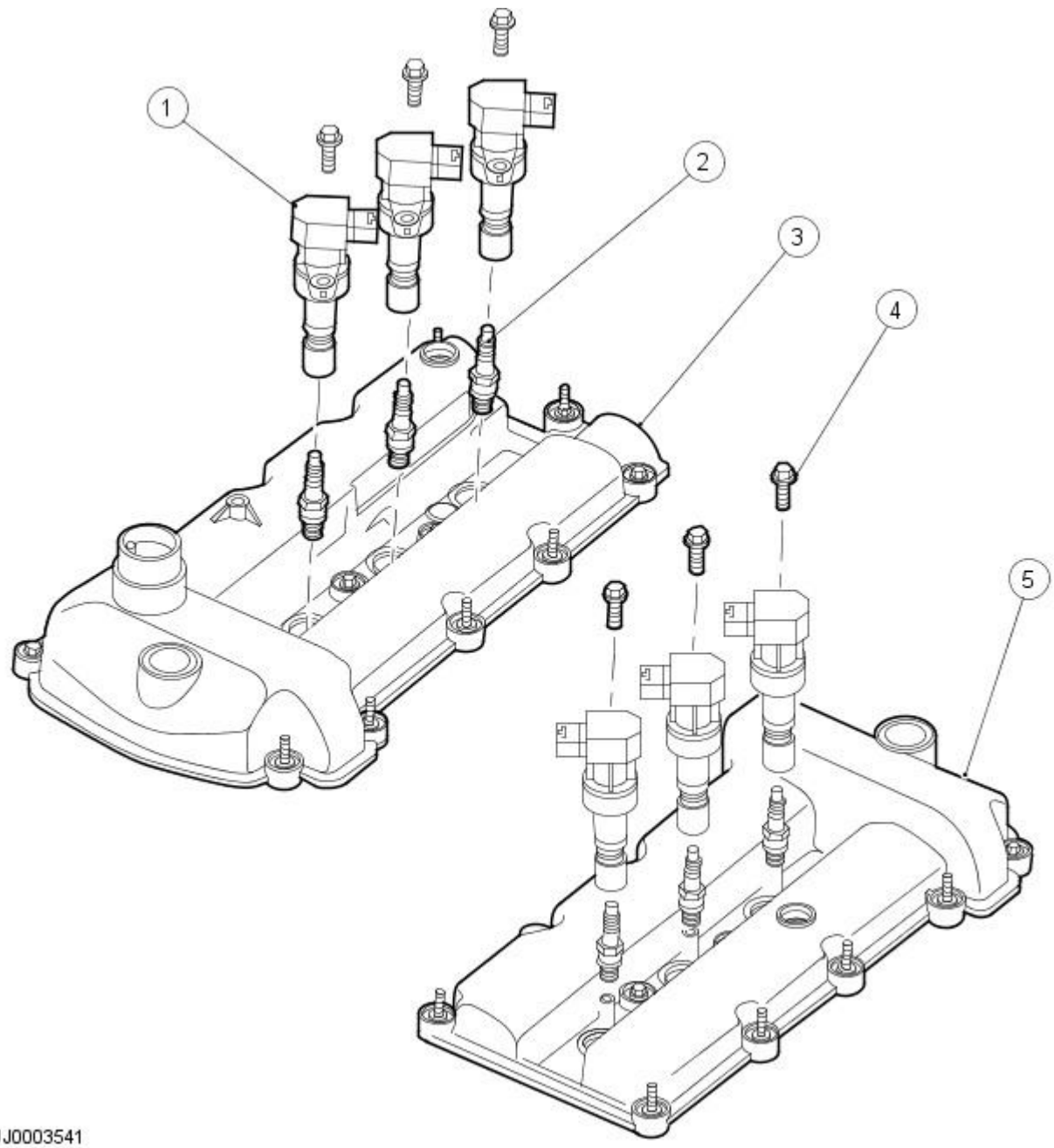

VUJ0003541

Item	Part Number	Description
1	-	Ignition Coil
2	-	Spark Plug
3	-	RH Bank
4	-	Ignition Coil Retaining Bolt
5	-	LH Bank

In order for the correct firing order to be observed it should be noted that the correct cylinder numbering is, when viewed from the rear of the engine, the right-hand cylinder bank is numbered 5,3,1 and the left-hand cylinder bank is numbered 6,4,2.

The ignition system consists of an ignition coil for each individual cylinder located on each individual spark plug. This allows the ignition timing to be adjusted more rapidly and independently.

The crankshaft position (CKP) sensor signal is the basis for ignition timing calculations. The alternating voltage signal from the CKP sensor is converted by the engine control module (ECM). This digital signal is then used to position the closing time of the primary circuit of the ignition coil. The effective range for ignition timing control is increased by the fact that there are no rotating parts.

On the basis of engine speed and load inputs, the ECM determines the ignition timing. This function also takes other inputs into consideration such as engine temperature, throttle position, knock control and electronic transmission control inputs.

This ignition system allows the customer to drive the vehicle home if an ignition coil or ignition coil wiring harness failure occurs. In the event of a wiring harness failure between the ECM and the ignition coil, the ignition coil will fail instead of its fuse. This will allow the remaining ignition coils to continue to function.

Published: 11-May-2011

Engine Ignition - 2.0L NA V6 - AJV6 / 2.5L NA V6 - AJV6 / 3.0L NA V6 - AJ27 - Engine Ignition2.0L NA V6 - AJV6

Diagnosis and Testing

1. **1.** Verify the customer concern by operating the system.
2. **2.** Visually inspect for obvious signs of mechanical or electrical damage.
3. **3.** If an obvious cause for an observed or reported concern is found, correct the cause (if possible) before proceeding to the next step.
4. **4.** The DTC summaries are generated to support the Jaguar approved diagnostic system, but also provide the basis for diagnosis of OBD related concerns using a suitable generic scan tool, in conjunction with the electrical guides. Until the DTC summaries and electrical guides are available, the engine ignition system can only be accurately diagnosed using the Jaguar approved diagnostic system. For additional information, refer to Dealer technical support.

Published: 11-May-2011

Engine Ignition - 2.0L NA V6 - AJV6 / 2.5L NA V6 - AJV6 / 3.0L NA V6 - AJ27 - Engine Ignition2.5L NA V6 - AJV6 / 3.0L NA V6 - AJ27

Diagnosis and Testing

1. **1.** Verify the customer concern by operating the system.
2. **2.** Visually inspect for obvious signs of mechanical or electrical damage.
3. **3.** If an obvious cause for an observed or reported concern is found, correct the cause (if possible) before proceeding to the next step.
4. **4.** If the concern is not visually evident, refer to the Symptom Chart.

Symptom Chart

DTC	Condition	Possible Source	Action
• P0300 • P0301 • P0302 • P0303 • P0304 • P0305 • P0306	Random misfire detected. Misfire at cylinders 1 to 6	• Poor cylinder compression. • Damaged or worn piston rings. • Inlet/exhaust valve stuck open/closed. • Worn camshaft. • Damaged cylinder head gasket. • Spark plug fouled/damaged, incorrect gap.	REFER to Section 303-01A Engine / 303-01B Engine.
		• Fuel delivery pressure high/low. • Faulty injector inoperative/leaking. • Fuel injector continuously open. • Fuel contamination. • Fuel injector circuit fault.	REFER to Section 303-04A Fuel Charging and Controls / 303-04B Fuel Charging and Controls / 303-04C Fuel Charging and Controls - Turbocharger.
		• Damaged ignition coil. • Damaged electrical harness/connection. • Damaged spark plug.	GO to Pinpoint Test A.
• P0351 • P0353 • P0355	Ignition coils 1A, 2A or 3A primary circuit malfunctions.	• Ignition coil open/short circuit. • Ignition coil insulation breakdown. • Damaged harness. • Connector pins bent or corroded. • Ignition circuit ground fault. • Damaged engine control module (ECM).	GO to Pinpoint Test A.
• P0352 • P0354 • P0356	Ignition coils 1B, 2B or 3B primary circuit malfunctions.	• Ignition coil open/short circuit. • Ignition coil insulation breakdown. • Damaged harness. • Connector pins bent or corroded. • Ignition circuit ground fault. • Damaged ECM.	GO to Pinpoint Test A.
P1367	Ignition amplifier group 1 fault. (Cylinders 1, 3, and 5).	• Ignition coil open/short circuit. • Ignition coil insulation breakdown. • Damaged harness. • Connector pins bent or corroded. • Ignition circuit ground fault. • Damaged ECM.	GO to Pinpoint Test A.
P1368	Ignition amplifier group 2 fault. (Cylinders 2, 4, and 6).	• Ignition coil open/short circuit. • Ignition coil insulation breakdown. • Damaged harness. • Connector pins bent or corroded. • Ignition circuit ground fault. • Damaged ECM.	GO to Pinpoint Test A.

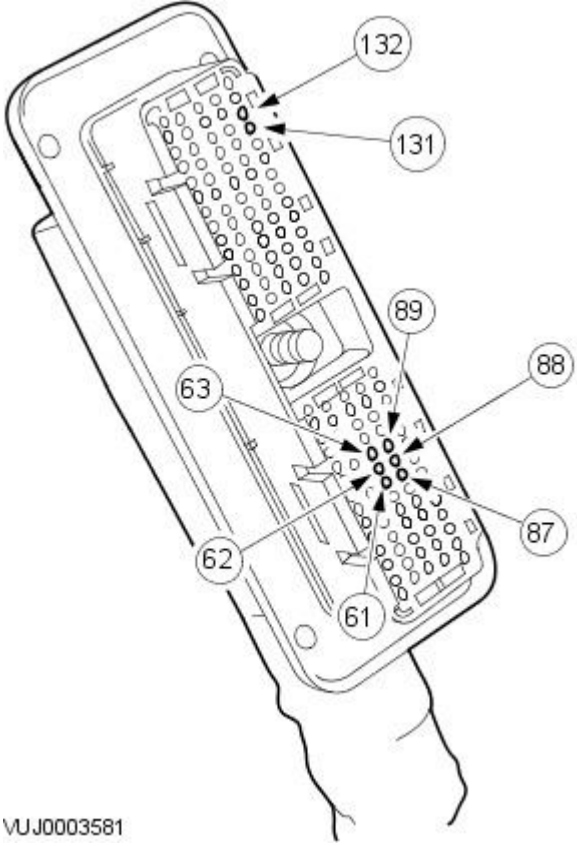

Engine Control Module (ECM) Harness Connector

Pin Number	Circuit Function	Circuit Color
61	1B ignition coil trigger	Green/Blue
62	2B ignition coil trigger	Green/white
63	3B ignition coil trigger	Green/red
87	1A ignition coil trigger	Green/Blue
88	2A ignition coil trigger	Green/white
89	3A ignition coil trigger	Green/red

1A, 2A, 3A Ignition Coil Harness Connectors

Pin Number	Circuit Function	Circuit Color
1	Ignition coil voltage supply	Red/white
2	Ignition coil diagnostic signal	Yellow/green
3	Ignition coil ground supply	Black
4	Ignition coil trigger	1A - Green/blue, 2A - Green/white, 3A - Green/red

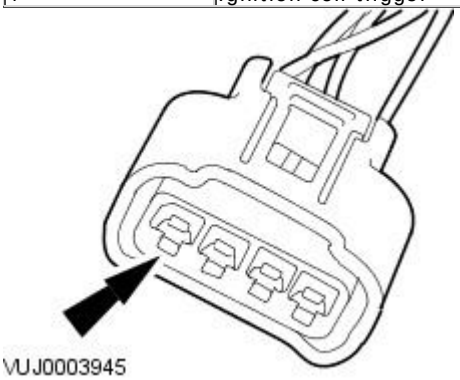

1B, 2B, 3B Ignition Coil Harness Connectors

Pin Number	Circuit Function	Circuit Color
1	Ignition coil voltage supply	Red/white
2	Ignition coil diagnostic signal	Yellow/green
3	Ignition coil ground supply	Black
4	Ignition coil trigger	1B - Green/blue, 2B - Green/white, 3B - Green/red

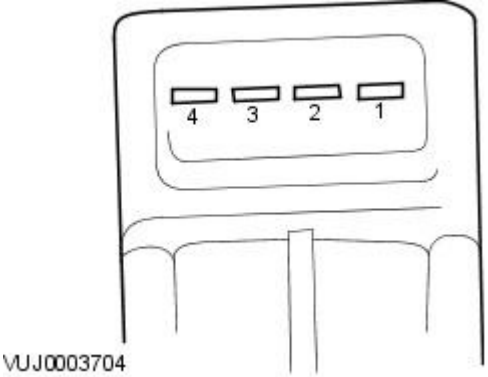

1A, 2A, 3A, 1B, 2B, 3B Ignition Coils

Pin Number	Circuit Function
1	Ignition coil voltage supply
2	Ignition coil diagnostic signal
3	Ignition coil ground supply
4	Ignition coil trigger

PINPOINT TEST A : IGNITION COILS — P0351, P0352, P0353, P0354, P0355, P0356, P1367, P1368	
• NOTE: Unless multiple cylinder misfires are apparent, only one circuit will normally need to be tested. The DTC set will indicate which cylinder is misfiring.	
TEST CONDITIONS	**DETAILS/RESULTS/ACTIONS**
A1: CHECK COIL FUNCTION BY SUBSTITUTION	
	1 Swap suspect coil for known good unit.
	2 CLEAR the DTC. TEST the system for normal operation.
	Does the same DTC reoccur? The DTC will indicate if the same cylinder is misfiring. **Yes** GO to A2. **No** CLEAR the DTC. TEST the system for normal operation.
A2: CHECK THE IGNITION COIL SUPPLY VOLTAGE CIRCUIT	
	1 Disconnect the relevant A bank ignition coil electrical connector(s).
	2 Turn the ignition switch to the ON position.
	3 Measure the voltage between: • Cyl A1. EN051 pin 1, (RW) and GROUND. • Cyl A2. EN052 pin 1, (RW) and GROUND. • Cyl A3. EN053 pin 1, (RW) and GROUND.
	4 Disconnect the relevant B bank ignition coil electrical connector(s).
	5 Measure the voltage between: • Cyl B1. EN054 pin 1, (RW) and GROUND. • Cyl B2. EN055 pin 1, (RW) and GROUND. • Cyl B3. EN056 pin 1, (RW) and GROUND.
	Is the voltage greater than 10.5 Volts? **Yes** GO to A3. **No** REPAIR the relevant ignition coil supply voltage circuit. For additional information, refer to wiring digrams. CLEAR the DTCs. TEST the system for normal operation.
A3: CHECK THE IGNITION COIL GROUND CIRCUIT	
	1 Switch the ignition to the OFF position.
	2 Disconnect the relevant A bank ignition coil electrical connector(s).
	3 Measure the resistance between: • Cyl A1. EN051 pin 3, (B) and GROUND. • Cyl A2. EN052 pin 3, (B) and GROUND. • Cyl A3. EN053 pin 3, (B) and GROUND.
	4 Disconnect the relevant B bank ignition coil electrical connector(s).
	5 Measure the resistance between: • Cyl B1. EN054 pin 3, (B) and GROUND. • Cyl B2. EN055 pin 3, (B) and GROUND. • Cyl B3. EN056 pin 3, (B) and GROUND.
	Is the resistance less than 5 ohms? **Yes** GO to A4. **No** REPAIR the relevant ignition coil ground circuit. For additional information, refer to wiring diagrams. CLEAR the DTCs. TEST the system for normal operation.
A4: CHECK THE CONTINUITY OF THE IGNITION COIL TRIGGER SUPPLY CIRCUIT	
	1 Disconnect the ECM electrical connector EN016.
	2 Check the continuity of the ignition coil trigger supply circuit between the relevant ignition coil electrical connector(s) and the ECM electrical connector: • Cyl A1. EN051 pin 4, (GU) and EN016 pin 87, (GU) • Cyl A2. EN052 pin 4, (GW) and EN016 pin 88, (GW) • Cyl A3. EN053 pin 4, (GR) and EN016 pin 89, (GR) • Cyl B1. EN054 pin 4, (GU) and EN016 pin 61, (GU)

	• Cyl B2. EN055 pin 4, (GW) and EN016 pin 62, (GW) • Cyl B3. EN056 pin 4, (GR) and EN016 pin 63, (GR)
	Is the resistance less than 5 ohms? **Yes** GO to A5. **No** REPAIR the ignition coil trigger supply circuit between the relevant ignition coil electrical connector(s) and the ECM electrical connector. CLEAR the DTCs. TEST the system for normal operation.
A5: CHECK THE CONTINUITY BETWEEN THE IGNITION COIL AND THE ECM	
	1 Check the continuity of the ignition coil diagnostic signal circuit, between the ignition coil electrical connector(s) and the ECM electrical connector: • Cyl A1. EN051 pin 2, (YG) and EN016 pin 131, (YG) • Cyl A2. EN052 pin 2, (YG) and EN016 pin 131, (YG) • Cyl A3. EN053 pin 2, (YG) and EN016 pin 131, (YG) • Cyl B1. EN054 pin 2, (YG) and EN016 pin 132, (YG) • Cyl B2. EN055 pin 2, (YG) and EN016 pin 132, (YG) • Cyl B3. EN056 pin 2, (YG) and EN016 pin 132, (YG)
	Is the resistance less than 5 Ohms? **Yes** INSTALL a new ECM. For additional information refer to Section 303-14A Electronic Engine ControlsSection 303-14B Electronic Engine Controls Before replacing a ECM, contact Dealer technical support. CLEAR the DTCs. TEST the system for normal operation. **No** REPAIR the circuit between the ignition coil electrical connector(s) and the ECM electrical connector. CLEAR the DTCs. TEST the system for normal operation.

Engine Ignition - 2.0L NA V6 - AJV6 / 2.5L NA V6 - AJV6 / 3.0L NA V6 - AJ27 - Ignition Coil-On-Plug LH

Removal and Installation

Removal

1. Disconnect the battery ground cable. For additional information, refer to Section 414-01 Battery, Mounting and Cables.
2. Remove the air cleaner. For additional information, refer to Section 303-12A Intake Air Distribution and FilteringSection 303-12B Intake Air Distribution and Filtering.
3. Disconnect the electrical connectors.

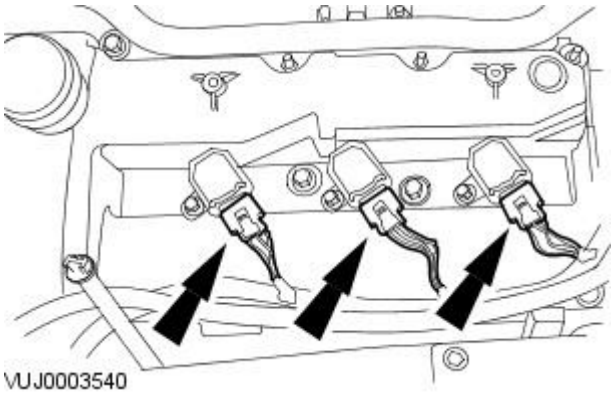

4. Remove the ignition coils.

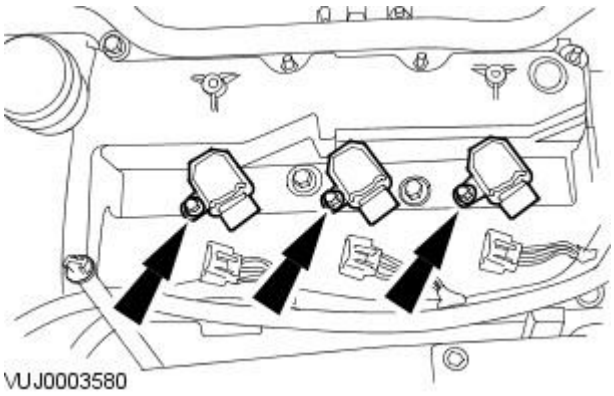

Installation

1. To install, reverse the removal procedure.
   - Tighten to 6 Nm.

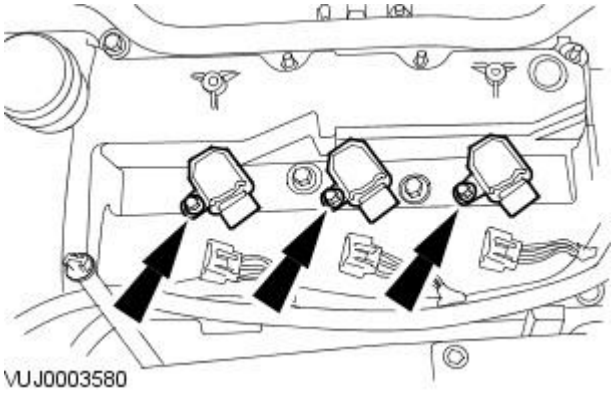

Published: 11-May-2011

Engine Ignition - 2.0L NA V6 - AJV6 / 2.5L NA V6 - AJV6 / 3.0L NA V6 - AJ27 - Ignition Coil-On-Plug RH

Removal and Installation

Removal

1. Disconnect the battery ground cable. For additional information, refer to Section 414-01 Battery, Mounting and Cables.
2. Remove the intake manifold. For additional information, refer to Section 303-01A EngineSection 303-01B Engine.
3. Disconnect the electrical connectors.

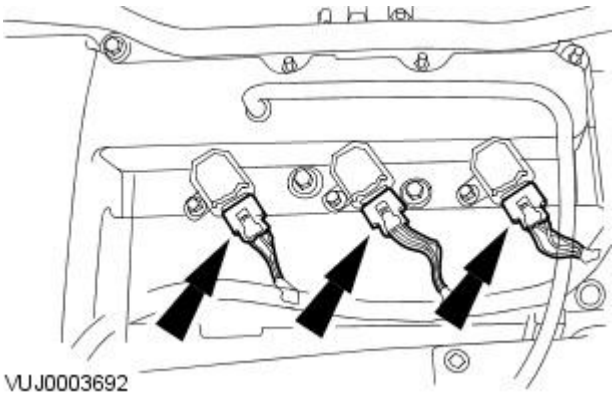

4. Remove the ignition coils.

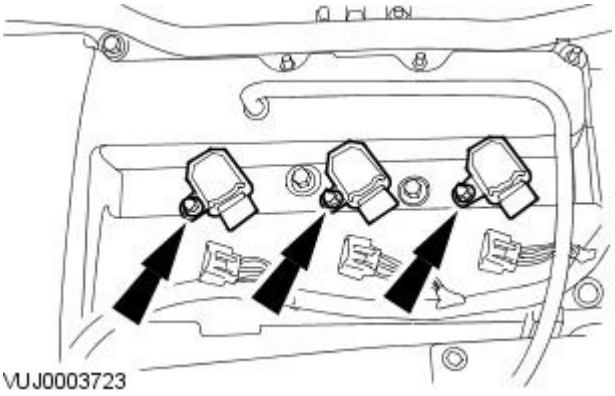

Installation

1. To install, reverse the removal procedure.
   - Tighten to 6 Nm.

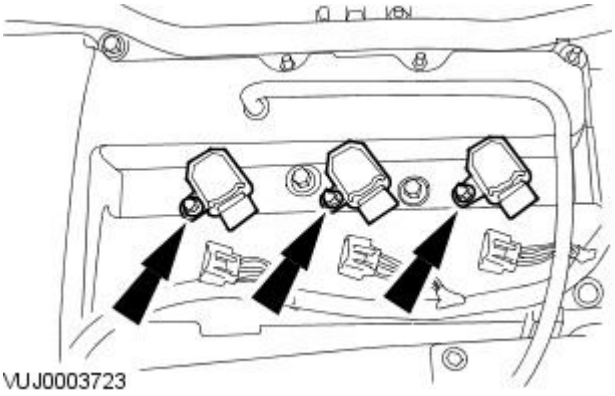

Published: 11-May-2011

Glow Plug System -

Torque Specifications

Description	Nm	lb-ft	lb-in
Glow plug	13	10	-
Glow plug electrical connector retaining nut	2	-	18
Main wiring harness to glow plug wiring harness nut	4	-	35
Glow plug terminal block retaining screw	5	-	44

Glow Plug System - Glow Plug System

Description and Operation

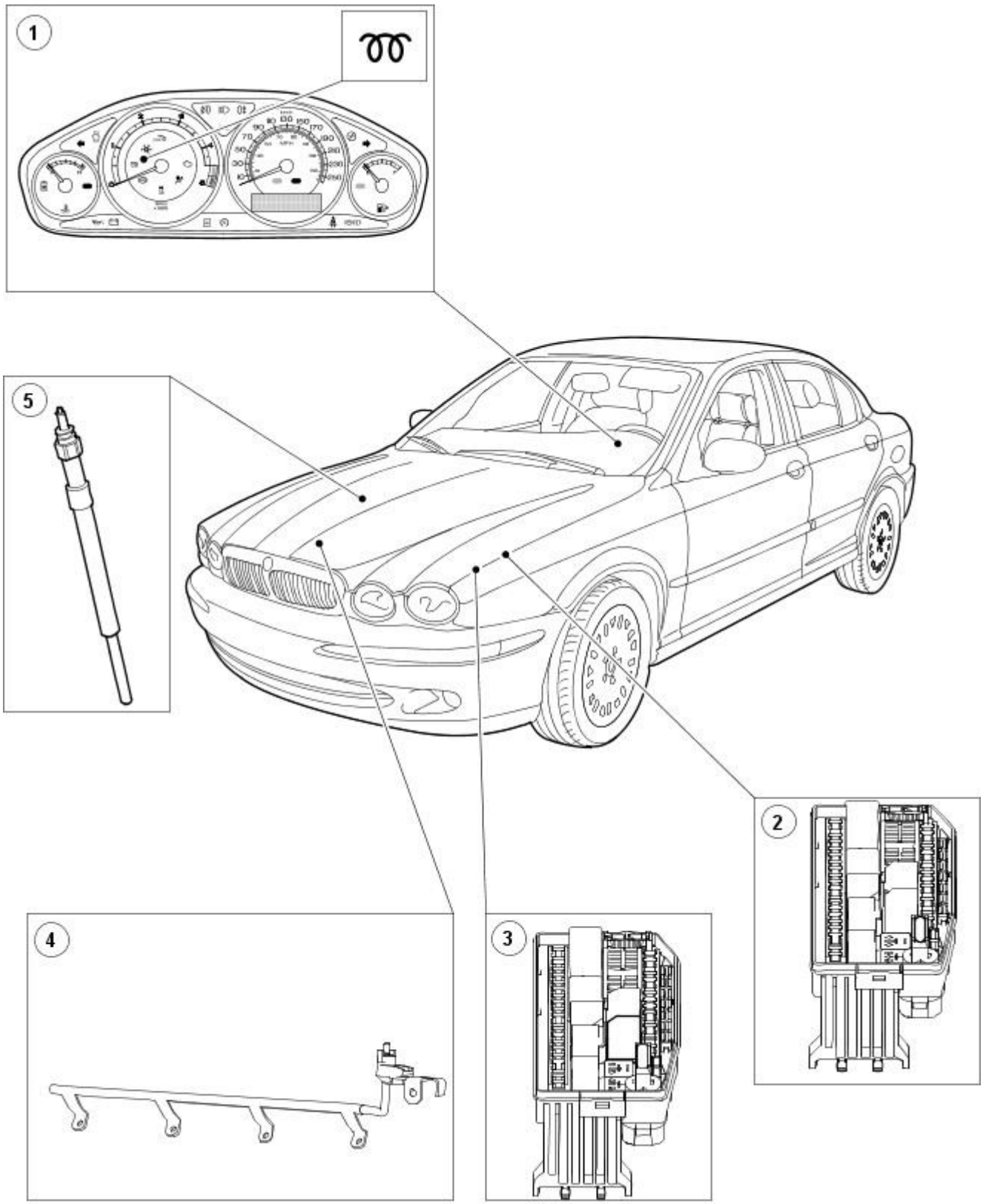

E44084

Item	Part Number	Description
1	-	Glow plug indicator lamp
2	-	Glow plug fuse
3	-	Glow plug relay
4	-	Glow plug wire
5	-	Glow plug

The glow plugs are located in the side of the cylinder head and aid engine starting and efficiency. The glow plugs and the glow plug indicator lamp are controlled by the engine control module (ECM).

The glow plugs preheat the combustion chambers, which aids cold starting. During the preheat stage, the ECM receives an engine temperature signal from the cylinder head temperature (CHT) sensor and this determines the preheat time. The lower the temperature, the longer the preheat time. There is a maximum preheat time of 8 seconds at -20° C (-4° F)or lower. At temperatures above 80° C (176° F) there is no preheat phase.

Once the engine has started, the glow plugs enter an after-glow phase. The after-glow phase helps to improve idling and reduce hydrocarbon emissions through more efficient combustion just after starting. The after-glow phase only operates at engine speeds below 2500 RPM, above that, the after-glow phase is interrupted to increase the durability of the glow plugs. There is a maximum after-glow time

of 30 seconds at -20° C (-4° F) or lower. At temperatures above 50°C (122° F) there is no after-glow phase.

Glow Plug System - Glow Plug System

Diagnosis and Testing

Principle of operation

As common rail diesel engines have better cold-starting characteristics than traditional diesel engines, the glow plugs have two functions on this engine:

Pre-heat stage

In this stage, the glow plugs function as normal, preheating the combustion chambers to aid cold starting.

After-glow stage

At engine speeds below 2,500 rpm, and at temperatures below 50 degrees C (122 degrees F), the glow plugs continue to heat the cylinders to improve idling and reduce emissions.

Warning light

The glow plug warning light on this vehicle not only informs the driver that the glow plugs are operating, but also as a malfunction indicator lamp (MIL) for the engine management system. For additional information,
REFER to: Glow Plug System (303-07B Glow Plug System, Description and Operation).

Inspection and Verification

1. **1.** Verify the customer concern.
2. **2.** Visually inspect for obvious signs of electrical damage.

Electrical
• Fuse 22, front power distribution box (60 Amp) • Fuse 18, front power distribution box (10 Amp) • Glow plug relay (R10, front power distribution box) • Engine management control relay (R7, front power distribution box) • Wiring harness • Electrical connector(s) • Glow plug(s) • Engine control module (ECM)

CAUTION: When probing connectors to take measurements in the course of the pinpoint tests, use the adaptor kit, part number 3548-1358-00. Failure to follow this instruction may result in damage to the vehicle.

• NOTE: This section contains references to Parameter Identifiers (PIDs). Where the Jaguar approved diagnostic system is not available, a scan tool may be used to access these PIDs, all of which give information, and some of which can be used to both read information and to activate components. The format of the information may vary, depending on the tool used.

• NOTE: As well as carrying out its normal function the glow plug indicator also acts as an engine check lamp which will flash continuously when a hard diagnostic trouble code (DTC) is detected by the ECM. Soft DTCs are also stored by the ECM but will only be identified if the system is checked for DTCs using the Jaguar approved diagnostic system or a scan tool.

• NOTE: If a DTC is detected, all DTCs must be cleared after the concern is repaired. Failure to clear all DTCs may cause driveability concerns.

• NOTE: When performing voltage or resistance tests, always use a digital multimeter (DMM) accurate to 3 decimal places, and with an up-to-date calibration certificate. When testing resistance, always take the resistance of the DMM leads into account.

• NOTE: Check and rectify basic faults before beginning diagnostic routines involving pinpoint tests.

• NOTE: If DTCs are recorded and the symptom is not present when performing the pinpoint tests, an intermittent concern may be the cause. Always check for loose connections and corroded terminals.

3. **3.** If an obvious cause for an observed or reported concern is found, correct the cause (if possible) before proceeding to the next step.

Diagnostic trouble code (DTC) index

DTC	Condition	Possible source	Action
P0380	Glow plug heater circuit	• Glow plug heater circuit: relay driver open circuit, short circuit	For glow plug circuit tests, GO to Pinpoint Test A.

Pinpoint Tests

PINPOINT TEST A : GLOW PLUG CIRCUIT TESTS	
TEST CONDITIONS	DETAILS/RESULTS/ACTIONS
A1: CHECK THE GLOW PLUG CIRCUIT(S) FOR SHORT CIRCUIT TO POWER	

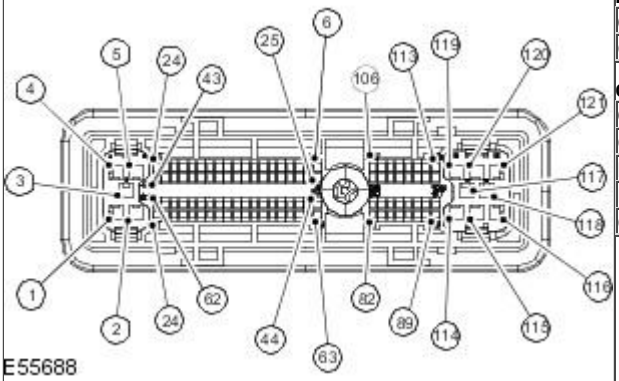

Engine control module (ECM) connector

Circuit	Pin
Glow plug - control	20

Glow plug relay connector

Circuit	Pin
Glow plug relay - control	02
Permanent 12 volt supply	03
ECM relay controlled 12 volt supply	01
Glow plug relay - output	05

1. Key off.
2. Glow plug fuse connector disconnected.
3. Key on, engine off.
4. Measure the resistance between:

Glow plug relay connector	Vehicle battery
Glow plug - control - Pin 02	Positive post

Is the resistance greater than 10 ohms?

Yes

GO to A3.

No

GO to A2.

A2: CHECK WHETHER THE SHORT CIRCUIT TO POWER IS IN THE HARNESS OR THE GLOW PLUGS

1. Glow plug assembly connector disconnected.
2. Measure the resistance between:

Glow plug relay connector	Vehicle battery
Glow plug - control - Pin 02	Positive post

Is the resistance greater than 10 ohms?

Yes

Harness is OK.Suspect :- Glow plug assembly.
REFER to: Glow Plugs (303-07B Glow Plug System, Removal and Installation).

No

REPAIR the short circuit. For additional information, refer to the wiring diagrams.

A3: CHECK THE GLOW PLUG CIRCUIT CONTINUITY

1. Measure the resistance between:

Glow plug relay connector	Vehicle battery
Glow plug - control - Pin 02	Negative post

Is the resistance between 0.5 ohm - 10 ohms?

Yes

GO to A6.

No

GO to A4.

A4: CHECK THE GLOW PLUG CIRCUIT FOR SHORT CIRCUIT TO GROUND

1. Glow plug assembly connector disconnected.
2. Measure the resistance between:

Glow plug relay connector	Vehicle battery
Glow plug - control - Pin 02	Negative post

Is the resistance greater than 10 ohms?

Yes

GO to A5.

No

REPAIR the short circuit. For additional information, refer to the wiring diagrams.

A5: CHECK THE GLOW PLUG CIRCUIT(S) FOR OPEN CIRCUIT IN THE HARNESS

1. Measure the resistance between:

Glow plug relay connector	Glow plug relay connector
Glow plug - control - 15S-RD15 - Pin 01	Glow plug - control - Pin 02

Is the resistance less than 10 ohms?

Yes

Suspect:- Glow plug assembly
REFER to: Glow Plugs (303-07B Glow Plug System, Removal and Installation).
- Glow plug assembly GROUND

No

REPAIR the open circuit. For additional information, refer to the wiring diagrams.

A6: CHECK THE GLOW PLUG CONTROL LINE 'ON' STATE

1. Scan tool connected.
2. Access and control the PID.
3. Activate the glow plugs.
4. Measure the voltage between:

Glow plug relay connector	Vehicle battery
Glow plug relay - output - Pin 01	Negative post

Is the voltage between 9 volts - 15 volts?

Yes

GO to A12.

No

GO to A7.

A7: CHECK THE GLOW PLUG CONTROL LINE FOR SHORT CIRCUIT TO GROUND

1 Key off.
2 Glow plug relay connector disconnected.
3 Key on, engine off.
4 Measure the resistance between:

Glow plug relay connector	Vehicle battery
Glow plug relay - output - Pin 01	Negative post

Is the resistance greater than 10 ohms?
Yes
GO to A8.
No
INSTALL a new front power distribution box assembly.

A8: CHECK THE GLOW PLUG CONTROL LINE FOR CONTINUITY

1 Measure the resistance between:

Glow plug relay connector	Glow plug relay connector
Glow plug relay - output - Pin 01	Glow plug relay - output - Pin 05

Is the resistance less than 10 ohms?
Yes
GO to A9.
No
REPAIR the open circuit. For additional information, refer to the wiring diagrams.

A9: CHECK SUPPLIES TO THE GLOW PLUG RELAY

1 Measure the voltage between:

Glow plug relay connector	Vehicle battery
ECM relay controlled 12 volt supply - Pin 01	Negative post
Permanent 12 volt supply - Pin 03	Negative post

Are the voltages between 9 volts - 15 volts?
Yes
GO to A10.
No
No supply to the glow plug relay circuit. Check and repair the circuit as necessary.

A10: CHECK THE ECM CONTROL LINE 'ON' STATE

1 Scan tool connected.
2 Access and control the glow plug control PID.
3 Activate the glow plugs.
4 Measure the resistance between:

Glow plug relay connector	Vehicle battery
Glow plug relay - control - Pin 02	Negative post

Is the resistance less than 10 ohms?
Yes
Suspect:- Glow plug relay connector- Glow plug relay fault
No
GO to A11.

A11: CHECK THE ECM CONTROL LINE FOR SHORT CIRCUIT TO POWER

1 Measure the resistance between:

Glow plug relay connector	Vehicle battery
Glow plug relay - control - Pin 02	Positive post

Is the resistance greater than 10 ohms?
Yes
GO to A17.
No
GO to A16.

A12: CHECK THE GLOW PLUG CONTROL LINE 'OFF' STATE

1 Scan tool connected.
2 Access and control the glow plug control PID.
3 De-activate the glow plugs.
4 Measure the resistance between:

Glow plug relay connector	Vehicle battery
Glow plug relay - output - Pin 01	Positive post

Is the resistance greater than 10 ohms?
Yes
An intermittent fault may be present in the wiring harness. Visually check for chaffed wires or other physical damage to the harness. If no fault is found in the circuit, suspect the following component(s):- Glow plug fuse connector- Glow plug fuse fault
No
GO to A13.

A13: CHECK THE GLOW PLUG CIRCUIT FOR SHORT CIRCUIT TO POWER IN THE HARNESS

1 Key off.
2 Glow plug relay connector disconnected.
3 Key on, engine off.
4 Measure the resistance between:

Glow plug relay connector	Vehicle battery
Glow plug relay - output - Pin 01	Positive post

Is the resistance greater than 10 ohms?
Yes
GO to A14.
No
INSTALL a new front power distribution box assembly.

A14: CHECK THE ECM CONTROL LINE FOR A SHORT CIRCUIT TO GROUND

1 Measure the resistance between:

Glow plug relay connector	Vehicle battery
Glow plug relay - control - Pin 02	Negative post

	Is the resistance greater than 10 ohms? **Yes** Suspect :- Glow plug relay fault **No** GO to A15.
A15: CHECK WHETHER THE SHORT CIRCUIT TO GROUND IS IN THE ECM HARNESS OR ECU	
	1 Key off. 2 ECM connector disconnected. 3 Key on, engine off. 4 Measure the resistance between:

Glow plug relay connector	**Vehicle battery**
Glow plug relay - control - Pin 02	Negative post

	Is the resistance greater than 10 ohms? **Yes** Harness is OK.Suspect :- ECM fault **No** REPAIR the short circuit. For additional information, refer to the wiring diagrams.
A16: CHECK WHETHER THE SHORT CIRCUIT TO POWER IS IN THE ECM HARNESS OR ECU	
	1 Key off. 2 ECM connector disconnected. 3 Key on, engine off. 4 Measure the resistance between:

Glow plug relay connector	**Vehicle battery**
Glow plug relay - control - Pin 02	Positive post

	Is the resistance greater than 10 ohms? **Yes** Harness is OK.Suspect :- ECM fault **No** REPAIR the short circuit. For additional information, refer to the wiring diagrams.
A17: CHECK THE ECM CONTROL LINE FOR CONTINUITY	
	1 Key off. 2 ECM connector disconnected. 3 Measure the resistance between:

Glow plug relay connector	**Vehicle battery**
Glow plug relay - control - Pin 02	Glow plug - control - Pin 20

	Is the resistance less than 10 ohms? **Yes** Suspect :- ECM connector fault-ECM fault **No** REPAIR the open circuit. For additional information, refer to the wiring diagrams.

Glow Plug System - Glow Plugs

Removal and Installation

Removal

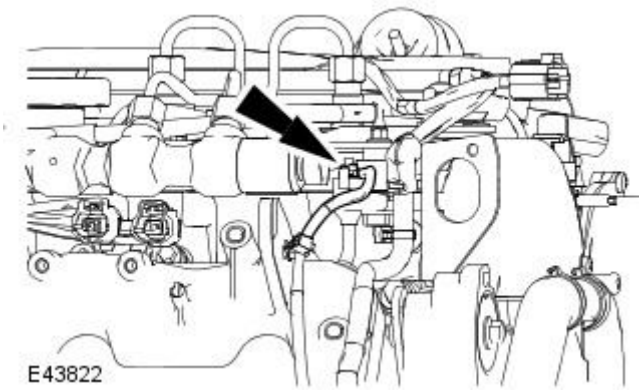

1. Disconnect the battery ground cable.
   For additional information, refer to: Battery Disconnect and Connect (414-01 Battery, Mounting and Cables, General Procedures).
2. Detach the glow plug wire electrical connector.

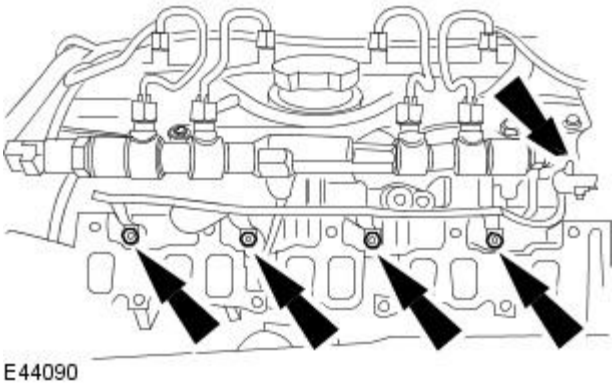

3. Remove the intake manifold.
   For additional information, refer to: Intake Manifold (303-01B Engine - 2.0L Duratorq-TDCi/2.2L Duratorq-TDCi (110kW/150PS) - Puma, In-vehicle Repair).
4. Remove the glow plug wire retaining nuts.

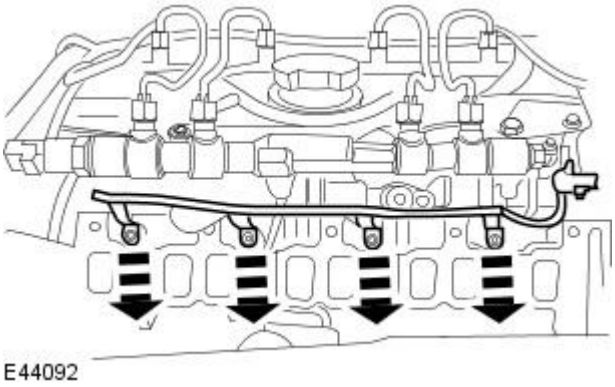

5. Remove the glow plug wire.

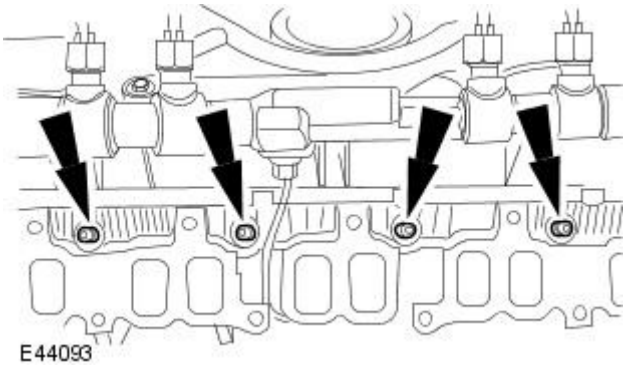

6. Remove the glow plugs.

Installation

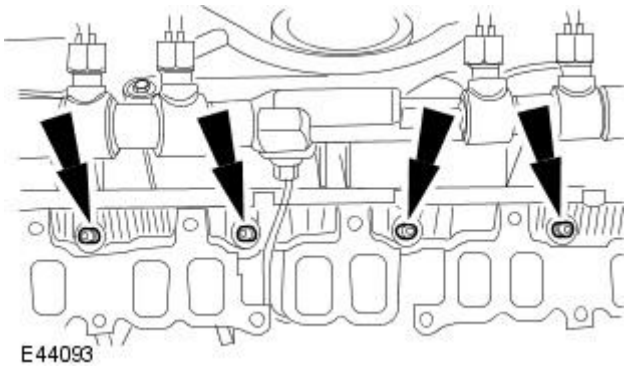

1. To install, reverse the removal procedure.
   - Tighten to 13 Nm.

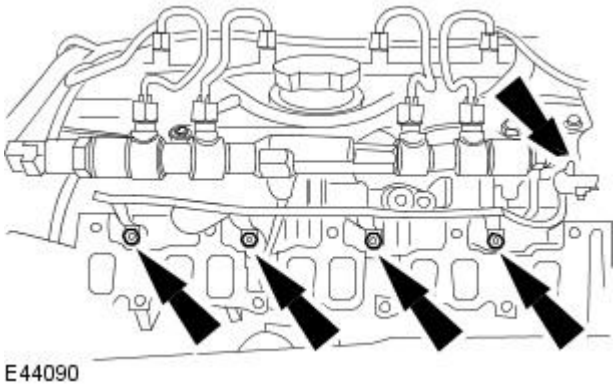

2. Tighten to 2 Nm.

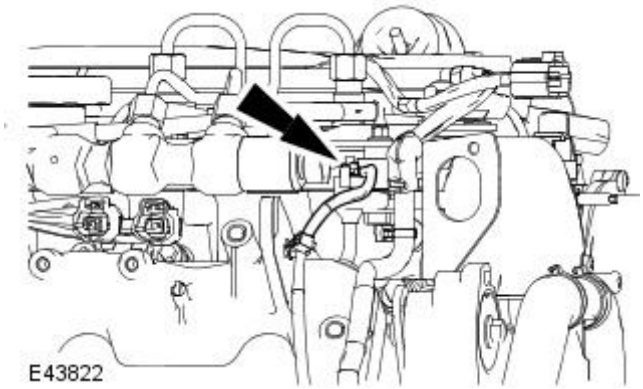

3. Tighten to 5 Nm.

4. Connect the battery ground cable.
   For additional information, refer to: Battery Connect (414-01 Battery, Mounting and Cables, General Procedures).

Published: 11-May-2011

Engine Emission Control - 2.0L Duratorq-TDCi / 2.2L Duratorq-TDCi (110kW / 150PS) - Puma -

Torque Specifications

Description	Nm	lb-ft	lb-in
Exhaust gas recirculation (EGR) valve to intake manifold retaining bolts	10	-	89
EGR valve tube to EGR valve retaining nuts	10	-	89
EGR valve tube to EGR valve retaining studs	11	8	-
EGR cooler to EGR valve tube mounting bracket retaining bolts	10	-	89
EGR cooler to EGR valve tube retaining bolts	10	-	89
Manifold absolute pressure (MAP) sensor retaining bolt	4	-	35

Engine Emission Control - 2.0L Duratorq-TDCi / 2.2L Duratorq-TDCi (110kW / 150PS) - Puma - Engine Emission Control

Description and Operation

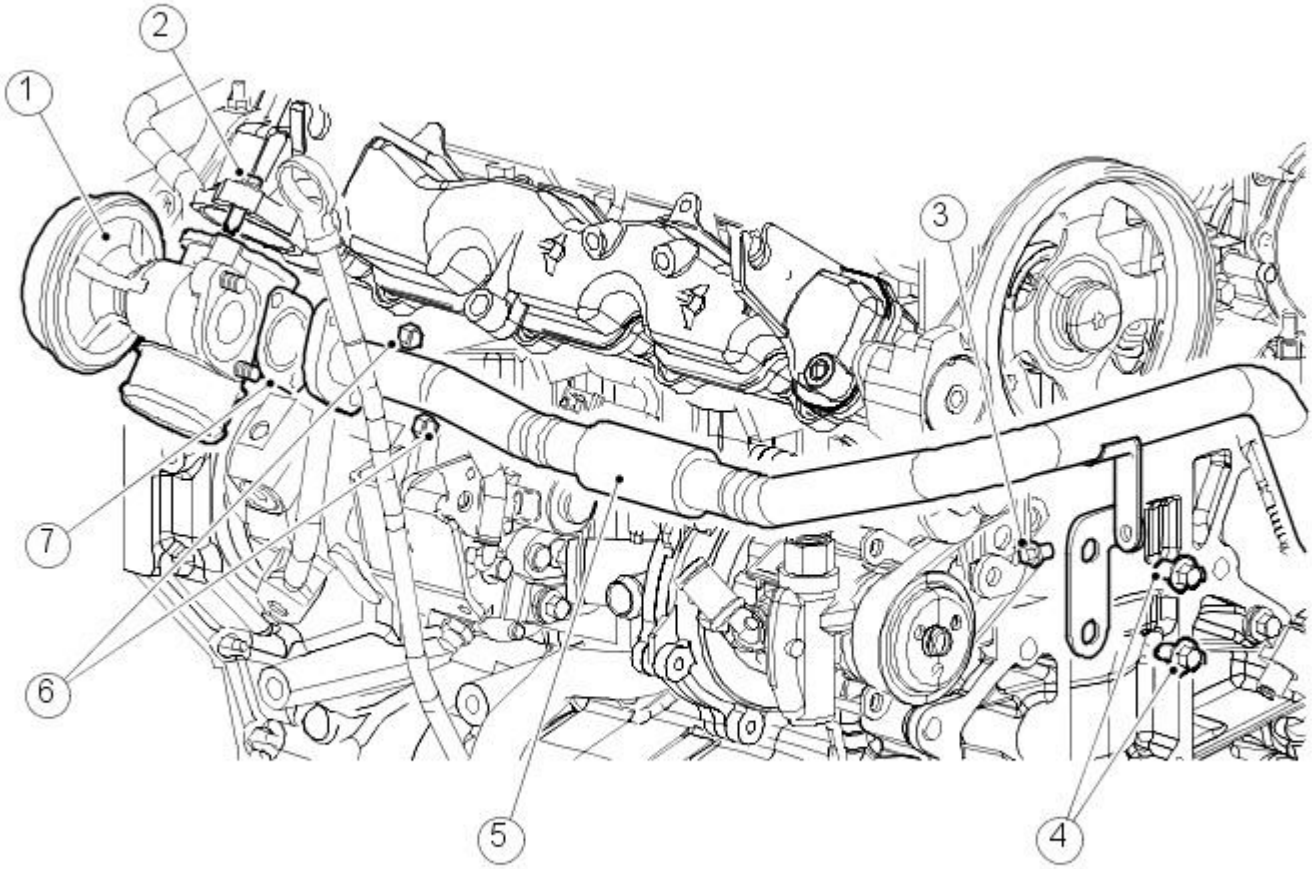

VUE0032383

Item	Part Number	Description
1	-	EGR valve
2	-	EGR valve to intake manifold retaining bolt
3	-	EGR cooler to EGR valve tube mounting bracket upper retaining bolt
4	-	EGR cooler to EGR valve tube mounting bracket lower retaining bolts
5	-	EGR cooler to EGR valve tube
6	-	EGR cooler to EGR valve tube to EGR valve retaining nuts
7	-	EGR cooler to EGR valve tube to EGR valve gasket

Published: 12-Jul-2011

Engine Emission Control - 2.0L Duratorq-TDCi / 2.2L Duratorq-TDCi (110kW / 150PS) - Puma - Engine Emission Control

Diagnosis and Testing

Overview

For information on the description and operation of the emission control system:
REFER to: Engine Emission Control (303-08 Engine Emission Control - 2.0L Duratorq-TDCi/2.2L Duratorq-TDCi (110kW/150PS) - Puma, Description and Operation).

Inspection and verification

1. **1.** Verify the customer concern.
2. **2.** Visually inspect for obvious mechanical or electrical faults.

Visual Inspection

Mechanical	Electrical
• Engine breather hoses • Exhaust gas recirculation (EGR) pipes (check for cracks) • EGR valve • EGR cooler	• Fuse(s) • Wiring harness • Loose or corroded electrical connector(s) • EGR valve • Engine control module (ECM)

3. **3.** If an obvious cause for an observed or reported concern is found, correct the cause (if possible) before proceeding to the next step.
4. **4.** Use the approved diagnostic system or a scan tool to retrieve any diagnostic trouble codes (DTCs) before moving onto the symptom chart or DTC index.
   - Make sure that all DTCs are cleared following rectification.

Symptom chart

Symptom (specific)	Possible cause	Action
Difficult to start Poor/Erratic idle Lack of power when accelerating	• Exhaust gas recirculation (EGR) valve(s) stuck open	Check the EGR valve and circuits. Refer to the electrical guides. Check the mechanical condition of the EGR valves. Rectify as necessary.
Engine stops/stalls	• Exhaust gas recirculation (EGR) valve(s) stuck open • Breather system disconnected/restricted/blocked	Check the EGR valve and circuits. Refer to the electrical guides. Check the mechanical condition of the EGR valves. Check the engine breather system. Check for DTCs indicating an EGR valve, throttle or sensor fault. Rectify as necessary.
Excessive fuel consumption Excessive black smoke Excessive emissions	• Exhaust gas recirculation (EGR) valve(s) stuck open • EGR not operating • Breather system restricted/blocked	
Excessive blow-by	• Breather system restricted/blocked	Check the engine breather system. Rectify as necessary.
Engine oil leaks	• Breather system restricted/blocked	Check the engine breather system. Rectify as necessary.

For a complete list of all diagnostic trouble codes that could be logged on this vehicle. REFER to: Electronic Engine Controls (303-14B Electronic Engine Controls - 2.0L Duratorq-TDCi/2.2L Duratorq-TDCi (110kW/150PS) - Puma, Diagnosis and Testing).

Published: 11-May-2011

Engine Emission Control - 2.0L Duratorq-TDCi / 2.2L Duratorq-TDCi (110kW / 150PS) - Puma - Exhaust Gas Recirculation (EGR) Cooler

Removal and Installation

Special Tool(s)	
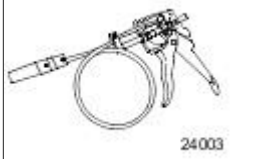	Remover/Installer, Cooling Hose Clamp 303-397 (24-003)

Removal

1. Drain the cooling system.
   For additional information, refer to: Cooling System Draining, Filling and Bleeding (303-03B Engine Cooling - 2.0L Duratorq-TDCi/2.2L Duratorq-TDCi (110kW/150PS) - Puma, General Procedures).
2. Remove the catalytic converter.
   For additional information, refer to: Catalytic Converter - 2.0L Duratorq-TDCi/2.2L Duratorq-TDCi (110kW/150PS) - Puma (309-00 Exhaust System, Removal and Installation).
3. Remove the air cleaner outlet pipe.
   For additional information, refer to: Air Cleaner Outlet Pipe (303-12B Intake Air Distribution and Filtering - 2.0L Duratorq-TDCi/2.2L Duratorq-TDCi (110kW/150PS) - Puma, Removal and Installation).
4. Using the special tool, disconnect the EGR cooler coolant hose from the thermostat housing.

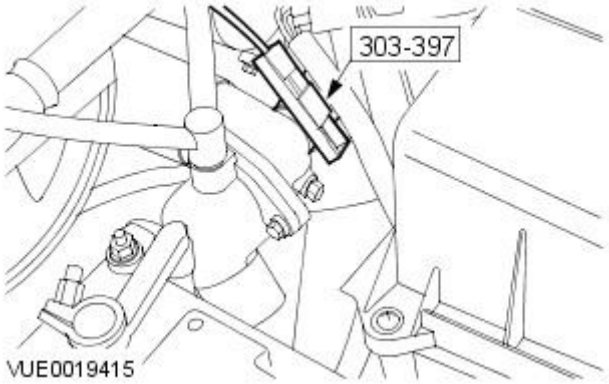

5. Using the special tool, disconnect the coolant hose from the EGR cooler.

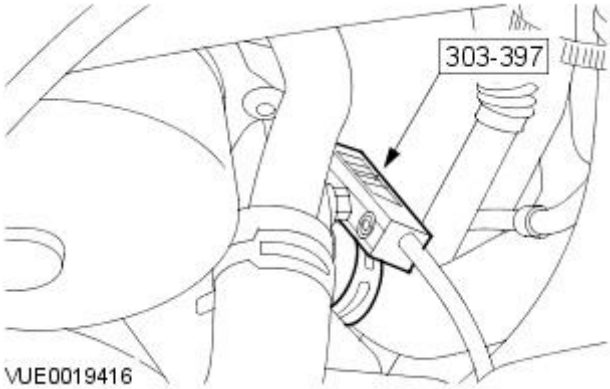

6. Raise the vehicle.
7. Remove the EGR cooler mount bracket retaining bolt.

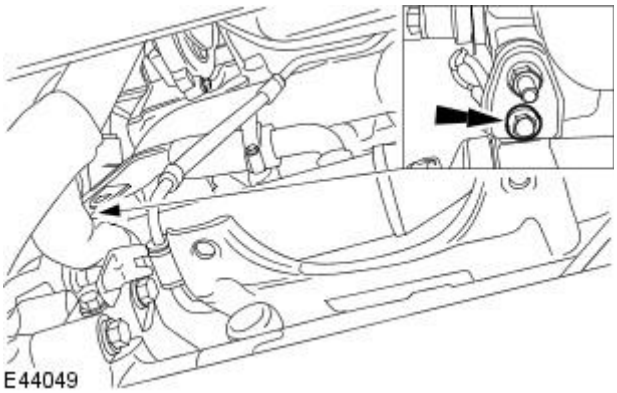

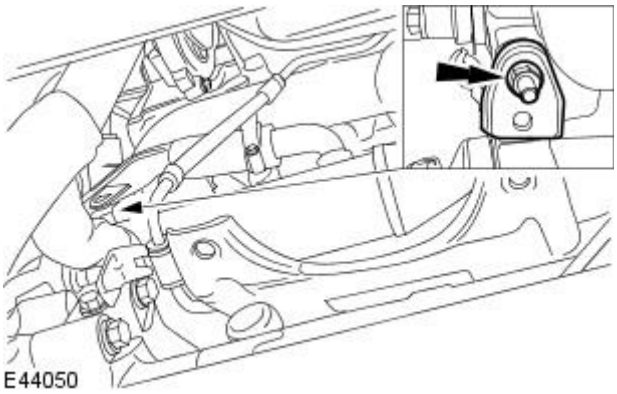

8. Remove the EGR cooler mount bracket.

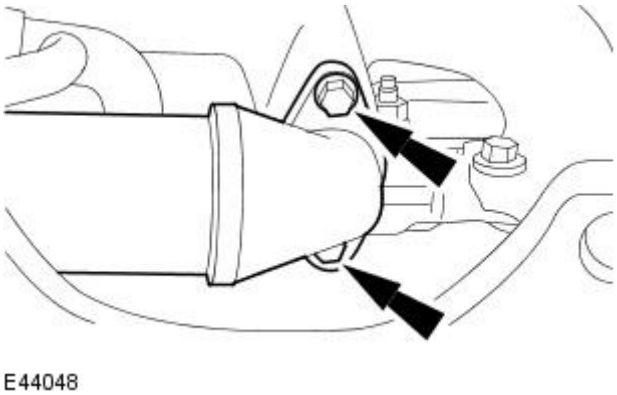

9. Remove the EGR cooler.

- Discard the gasket.

10. Remove the coolant hose from the EGR cooler.

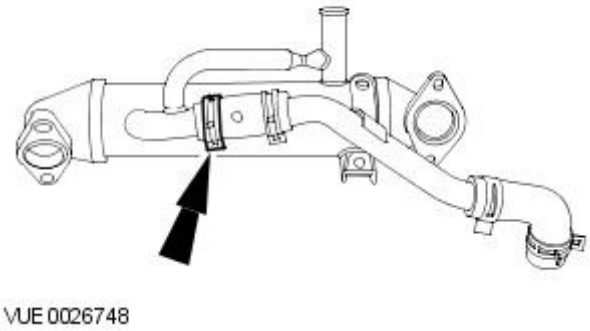

Installation

1. Install the coolant hose to the EGR cooler.

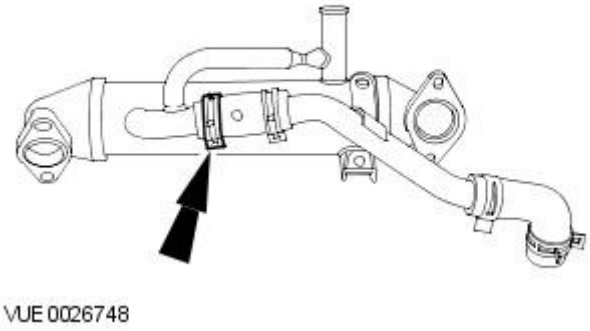

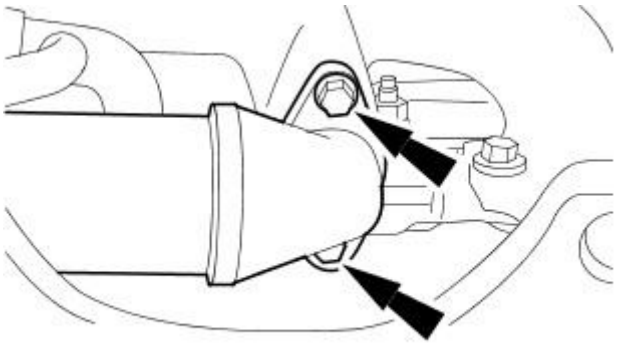

E44048

2. NOTE: Install a new EGR cooler gasket.

Install the EGR cooler.

- Tighten to 37 Nm.

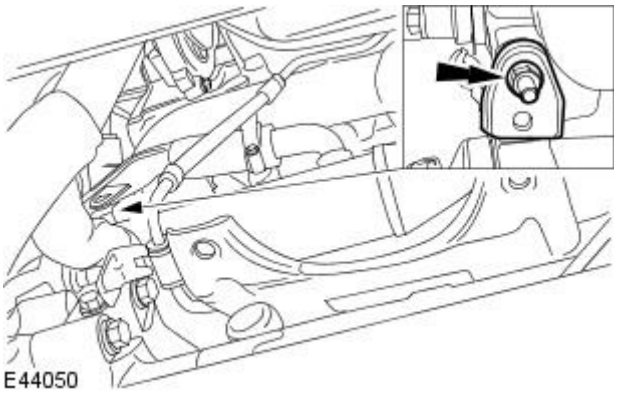

E44050

3. Install the EGR cooler mount bracket.

- Tighten to 10 Nm.

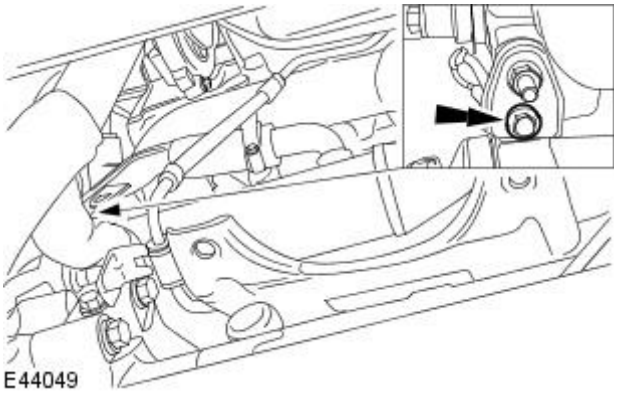

E44049

4. Install the EGR cooler mount bracket retaining bolt.

- Tighten to 10 Nm.

5. Lower the vehicle.

6. Using the special tool, connect the coolant hose to the EGR cooler.

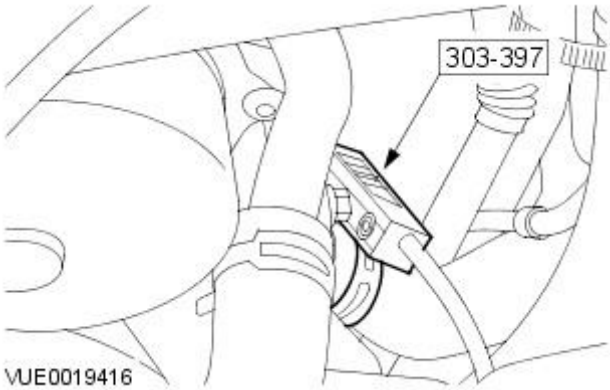

VUE0019416

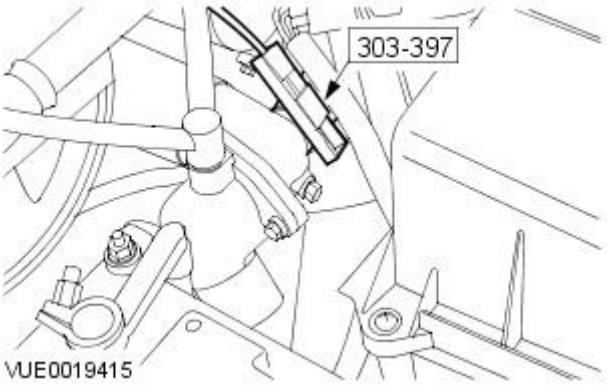

7. Using the special tool, connect the EGR cooler coolant hose to the thermostat housing.

8. Install the air cleaner outlet pipe.
   For additional information, refer to: Air Cleaner Outlet Pipe (303-12B Intake Air Distribution and Filtering - 2.0L Duratorq-TDCi/2.2L Duratorq-TDCi (110kW/150PS) - Puma, Removal and Installation).

9. Install the catalytic converter.
   For additional information, refer to: Catalytic Converter - 2.0L Duratorq-TDCi/2.2L Duratorq-TDCi (110kW/150PS) - Puma (309-00 Exhaust System, Removal and Installation).

10. Carry out the cooling system filling and bleeding procedure.
    For additional information, refer to: Cooling System Draining, Filling and Bleeding (303-03B Engine Cooling - 2.0L Duratorq-TDCi/2.2L Duratorq-TDCi (110kW/150PS) - Puma, General Procedures).

Engine Emission Control - 2.0L Duratorq-TDCi/2.2L Duratorq-TDCi (110kW/150PS) - Puma - Exhaust Gas Recirculation (EGR) Cooler to EGR Valve Tube

Removal and Installation

Removal

1. Remove the air cleaner.
   For additional information, refer to: Air Cleaner (303-12B Intake Air Distribution and Filtering - 2.0L Duratorq-TDCi/2.2L Duratorq-TDCi (110kW/150PS) - Puma, Removal and Installation).
2. Loosen the exhaust gas recirculation (EGR) cooler to EGR valve tube mounting bracket upper retaining bolt.

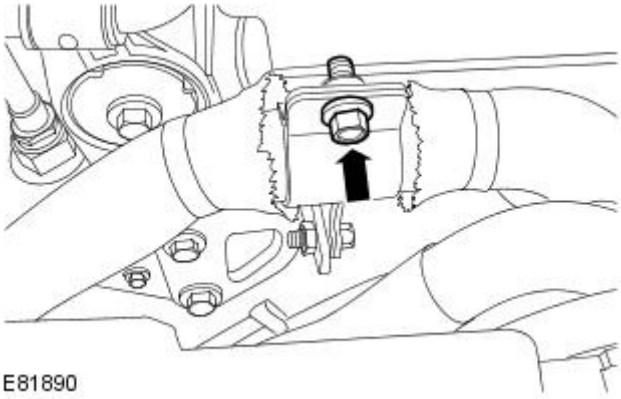

3. Remove the EGR cooler to EGR valve tube mounting bracket lower retaining bolt.

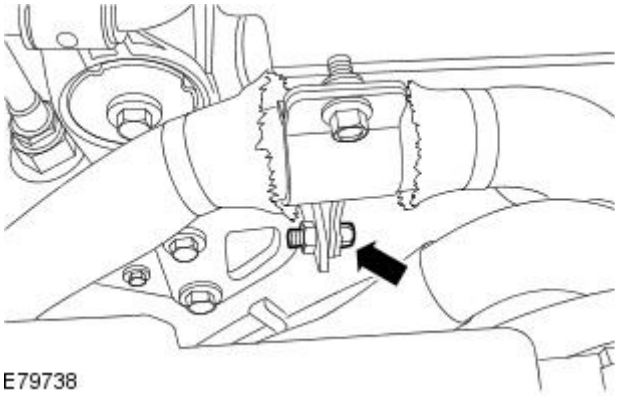

4. Remove the EGR valve tube to EGR cooler retaining bolts.
   - Remove and discard the gasket.

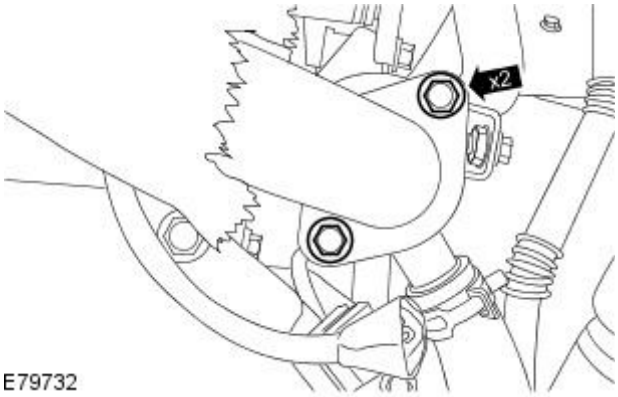

5. Remove the EGR valve tube to EGR valve retaining nuts.

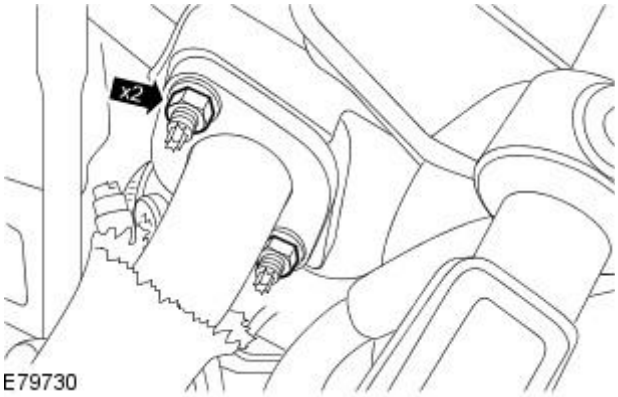

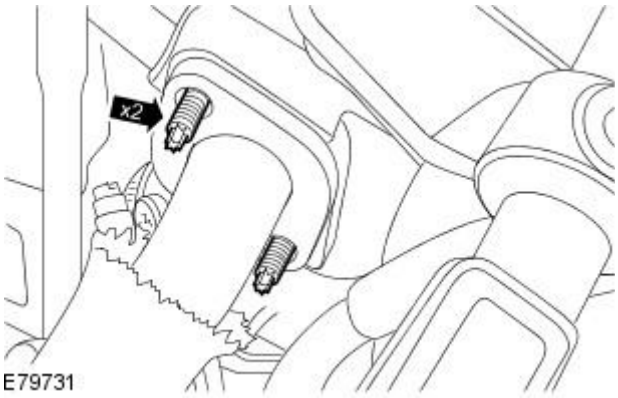

6. Remove the EGR valve tube to EGR valve retaining studs.

- Remove and discard the gasket.

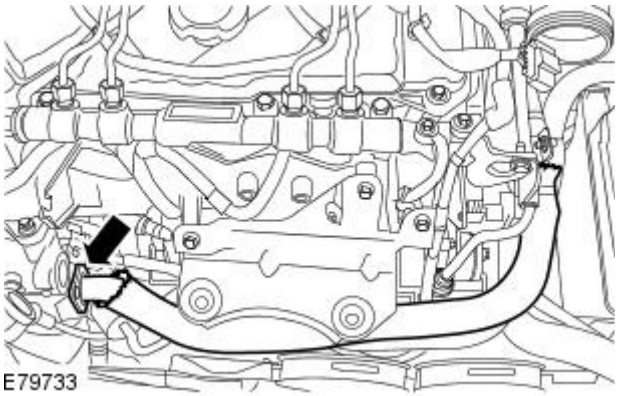

7. Remove the EGR cooler to EGR valve tube.

Installation

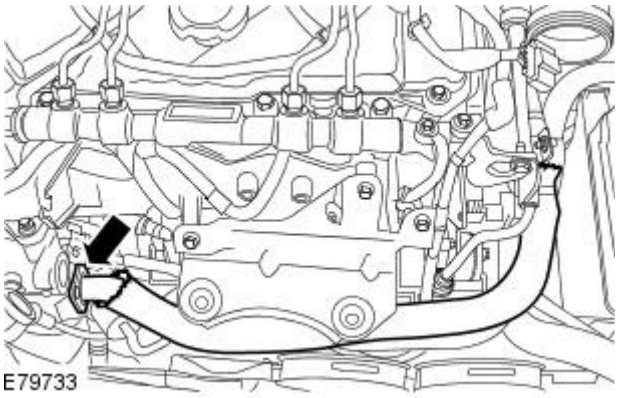

1. CAUTION: The tightening sequence of the EGR cooler to EGR valve tube retaining nuts and bolts is critical. Follow the exact order of tightening shown in the installation procedure. Failure to follow this instruction may result in damage to the vehicle.

Install the EGR cooler to EGR valve tube.

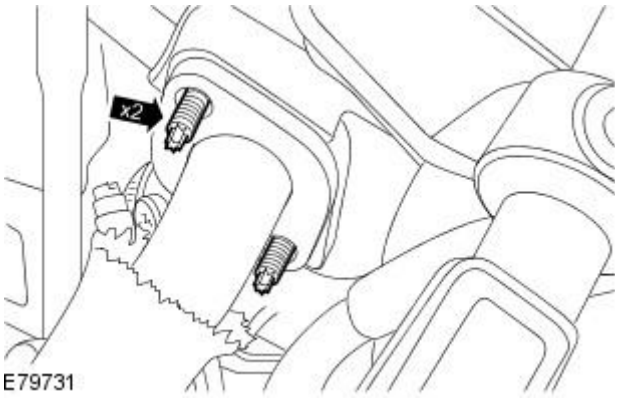

2. NOTE: Install a new EGR valve tube to EGR valve gasket.

Install the EGR valve tube to EGR valve retaining studs.

- Tighten to 11 Nm.

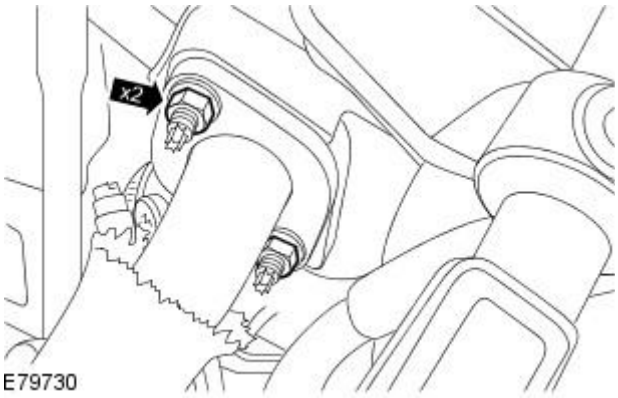

3. Loosely install the EGR valve tube to EGR valve retaining nuts.

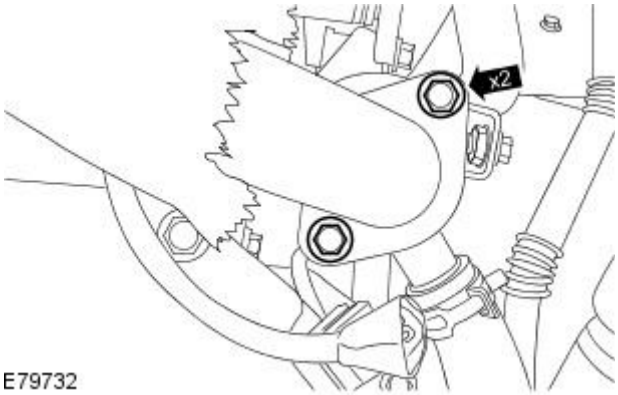

4. NOTE: Install a new EGR valve tube to EGR cooler gasket.

Loosely install the EGR valve tube to EGR cooler retaining bolts.

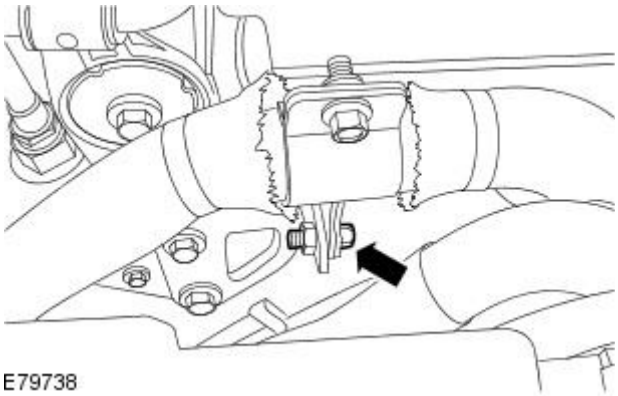

5. Loosely install the EGR cooler to EGR valve tube mounting bracket lower retaining bolt.

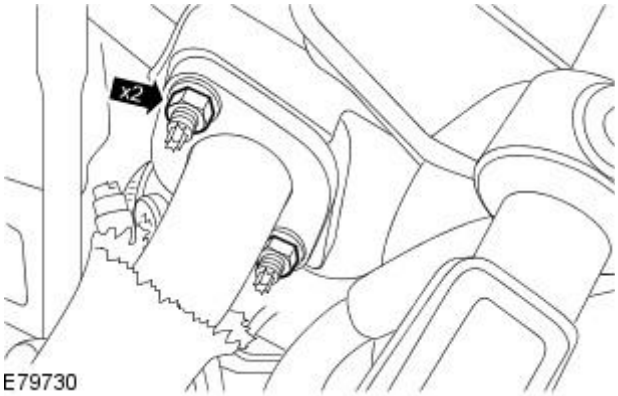

6. Tighten the EGR valve tube to EGR valve retaining nuts.

- Tighten to 10 Nm.

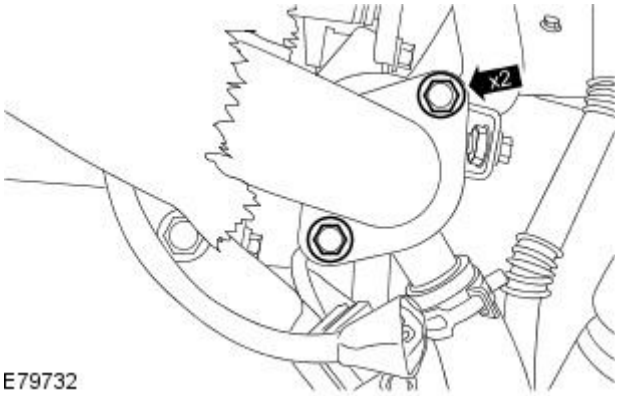

7. Tighten the EGR valve tube to EGR cooler retaining bolts.

- Tighten to 10 Nm.

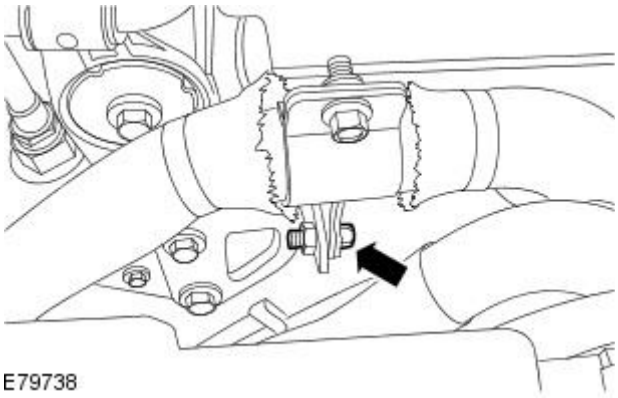

8. Tighten the EGR cooler to EGR valve tube mounting bracket lower retaining bolt.

- Tighten to 10 Nm.

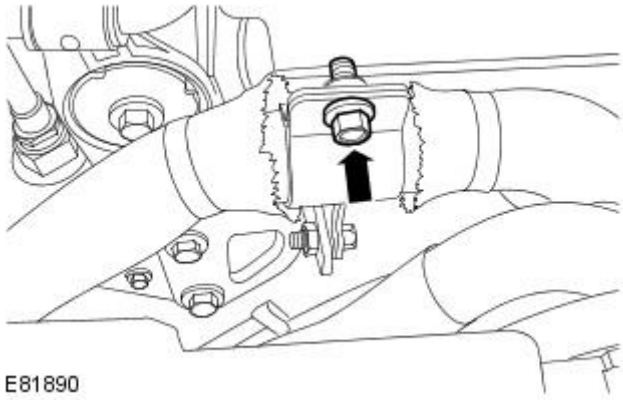

9. Tighten the EGR cooler to EGR valve tube mounting bracket upper retaining bolt.

- Tighten to 10 Nm.

10. Install the air cleaner.
For additional information, refer to: Air Cleaner (303-12B Intake Air Distribution and Filtering - 2.0L Duratorq-TDCi/2.2L Duratorq-TDCi (110kW/150PS) - Puma, Removal and Installation).

Engine Emission Control - 2.0L Duratorq-TDCi / 2.2L Duratorq-TDCi (110kW / 150PS) - Puma - Exhaust Gas Recirculation (EGR) Valve

Removal and Installation

Removal

1. Remove the air cleaner.
   For additional information, refer to: Air Cleaner (303-12B Intake Air Distribution and Filtering - 2.0L Duratorq-TDCi/2.2L Duratorq-TDCi (110kW/150PS) - Puma, Removal and Installation).
2. Disconnect the Exhaust Gas Recirculation (EGR) valve electrical connector.

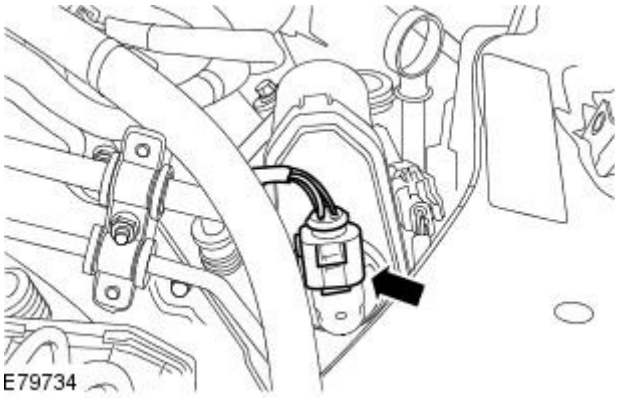

3. Disconnect the Manifold Absolute Pressure (MAP) sensor electrical connector.

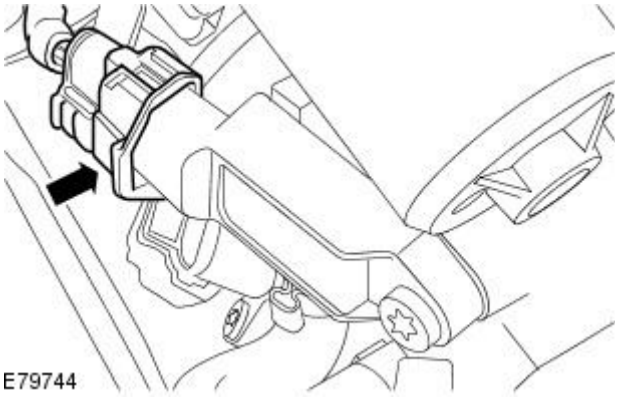

4. Disconnect the throttle plate position sensor electrical connector.

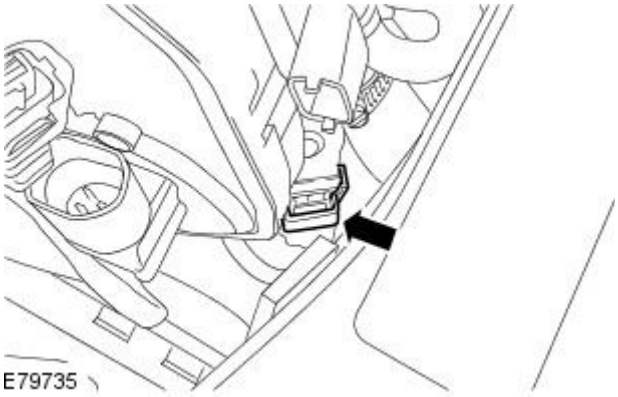

5. Disconnect the vacuum hose.

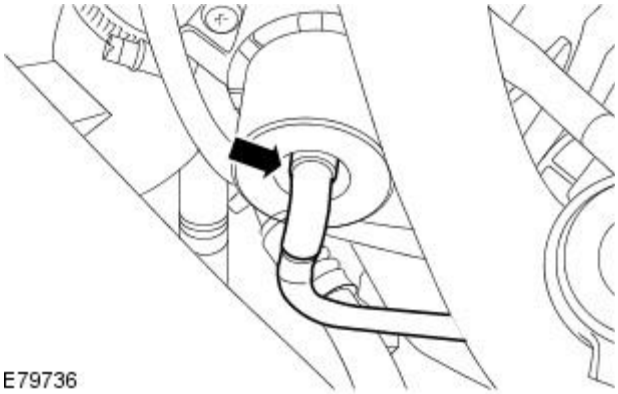

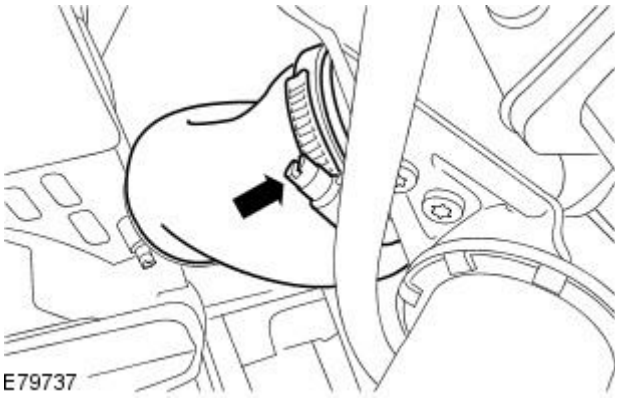

6. Detach the charge air cooler hose.

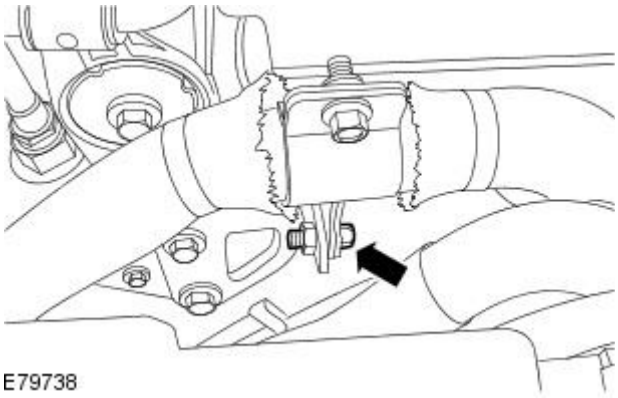

7. Loosen the EGR cooler to EGR valve tube mounting bracket lower retaining bolt.

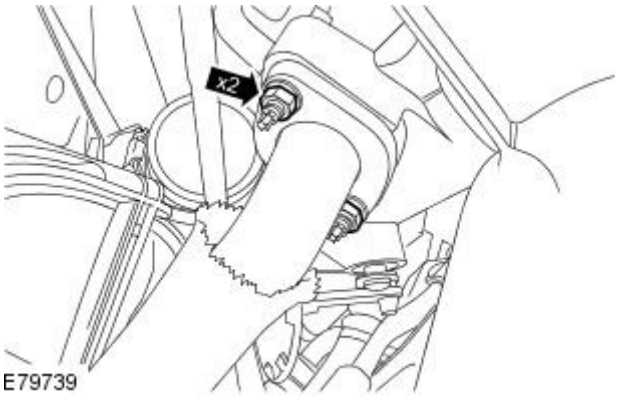

8. Remove the EGR valve tube to EGR valve retaining nuts.

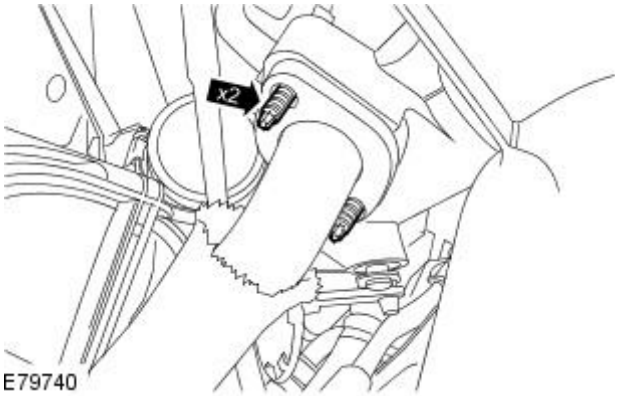

9. Remove the EGR valve tube to EGR valve retaining studs.

- Remove and discard the gasket.

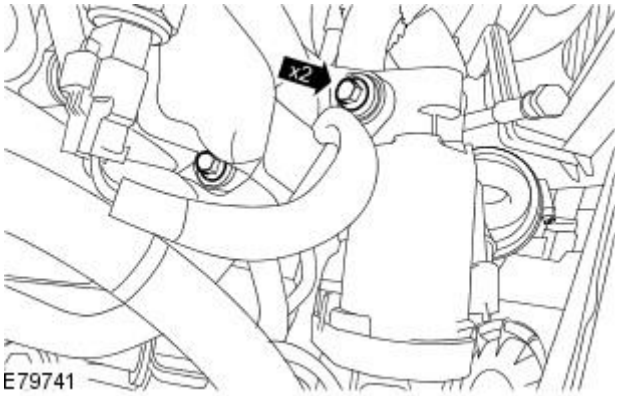

10. Remove the EGR valve to inlet manifold retaining bolts.

- Remove and discard the O-ring seal.

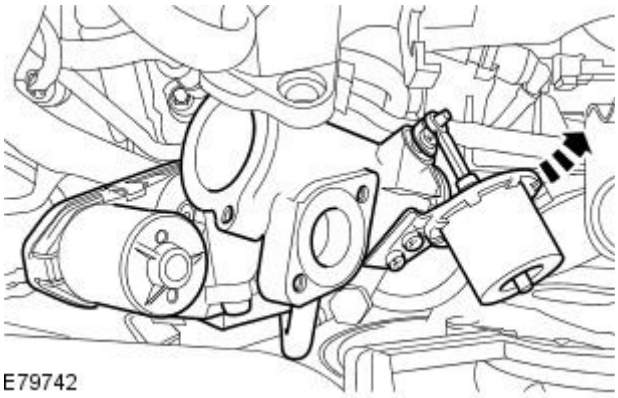

11. Remove the EGR valve.

Installation

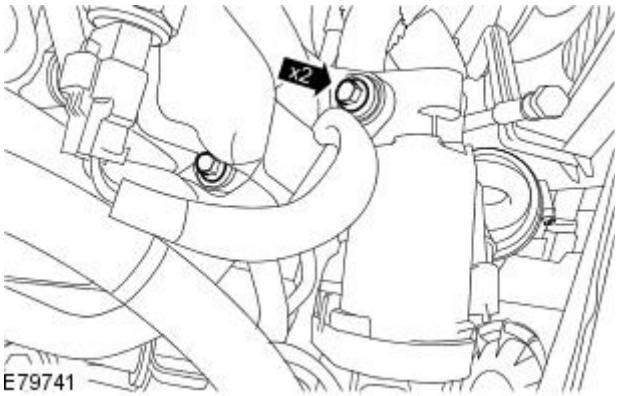

1. NOTE: Install a new EGR valve O-ring seal.

To install, reverse the removal procedure.

- Tighten to 10 Nm.

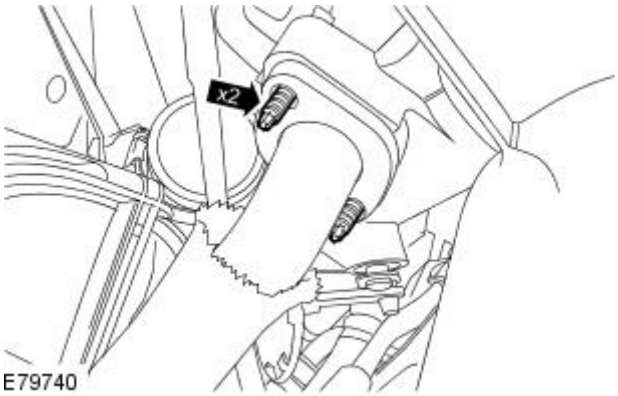

2. NOTE: Install a new EGR valve gasket.

Tighten to 11 Nm.

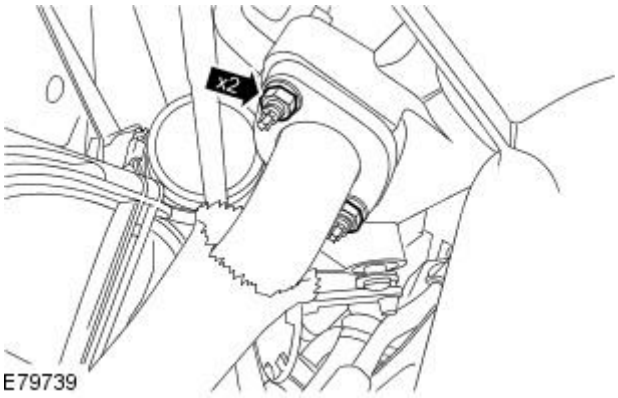

3. Tighten to 10 Nm.

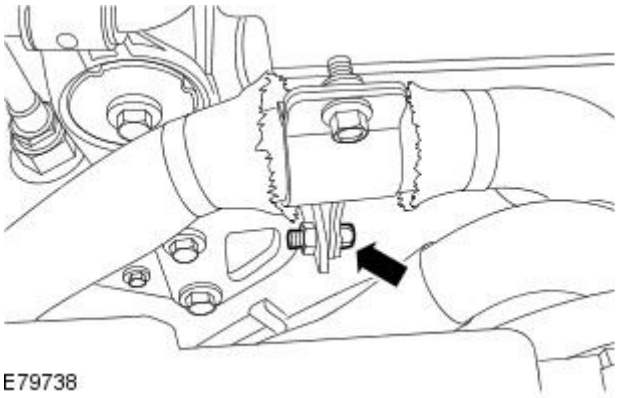

4. Tighten to 10 Nm.

Published: 11-May-2011

Intake Air Distribution and Filtering - 2.0L NA V6 - AJV6 / 2.5L NA V6 - AJV6 / 3.0L NA V6 - AJ27 - Intake Air Distribution and Filtering

Description and Operation

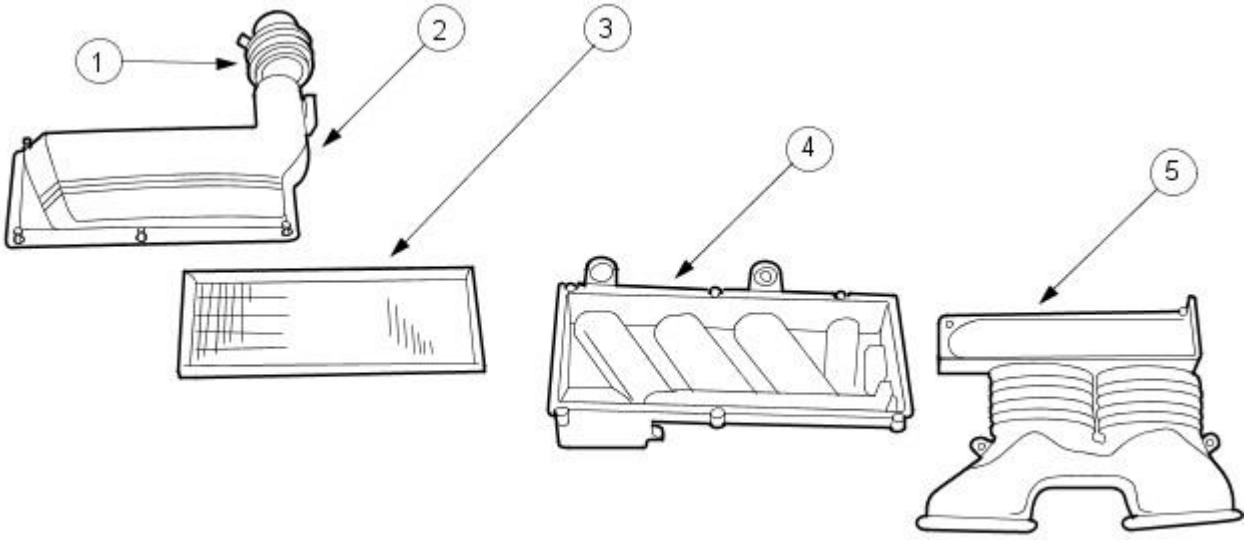

VUJ0002799

Item	Part Number	Description
1	—	Air cleaner outlet pipe
2	—	Air cleaner cover
3	—	Air cleaner element
4	—	Air cleaner
5	—	Air cleaner intake pipe

Published: 11-May-2011

Intake Air Distribution and Filtering - 2.0L NA V6 - AJV6 / 2.5L NA V6 - AJV6 / 3.0L NA V6 - AJ27 - Intake Air Distribution and Filtering

Diagnosis and Testing

Inspection and Verification

1. **1.** Verify the customer concern.
2. **2.** Visually inspect for obvious signs of mechanical damage.

Visual Inspection Chart

Mechanical
• Air cleaner intake pipe • Air cleaner outlet pipe • Air cleaner element

3. **3.** If an obvious cause for an observed or reported concern is found, correct the cause (if possible) before proceeding to the next step.
4. **4.** If the cause is not visually evident, verify the symptom and refer to the Jaguar Approved Diagnostic System.

Intake Air Distribution and Filtering - 2.0L NA V6 - AJV6 / 2.5L NA V6 - AJV6 / 3.0L NA V6 - AJ27 - Air Cleaner

Removal and Installation

Removal

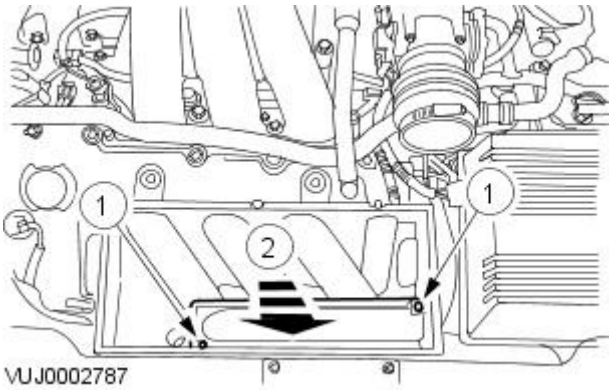

1. Remove the air cleaner element. For additional information, refer to the procedure in this section: Air Cleaner Element

2. Detach the air cleaner intake pipe.

1. Remove the air cleaner intake pipe retaining screws.
2. Detach the air cleaner intake pipe.

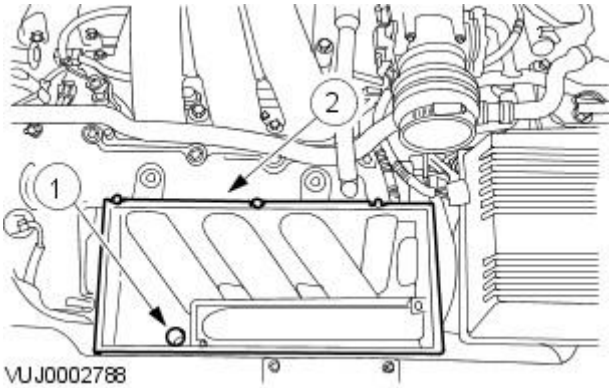

3. Remove the air cleaner.

1. Detach the air cleaner from the retaining grommet.
2. Remove the air cleaner.

Installation

1. NOTE: When installing the air cleaner, make sure that the locating peg is installed correctly into the retaining bracket grommet.

To install, reverse the removal procedure.

Intake Air Distribution and Filtering - 2.0L NA V6 - AJV6 / 2.5L NA V6 - AJV6 / 3.0L NA V6 - AJ27 - Air Cleaner Element

Removal and Installation

Removal

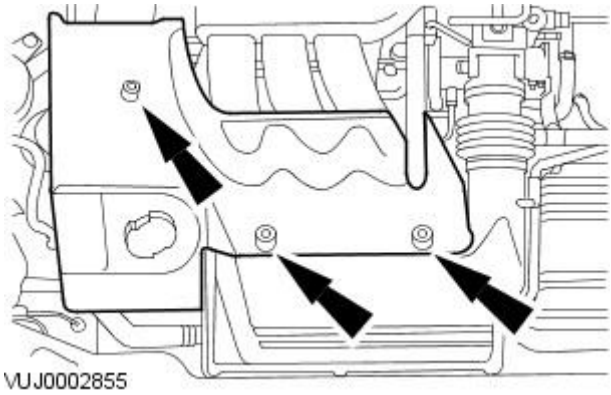

1. Remove the engine cover.

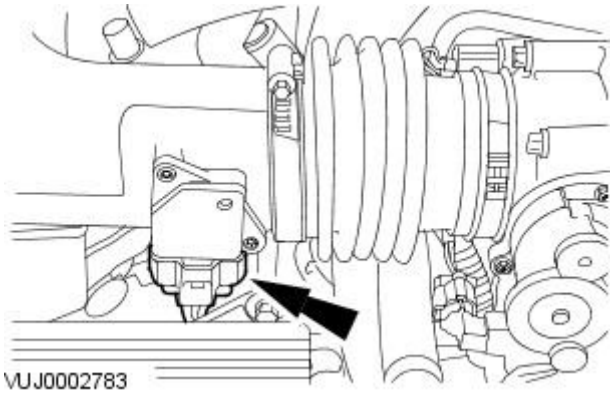

2. Disconnect the mass airflow sensor electrical connector.

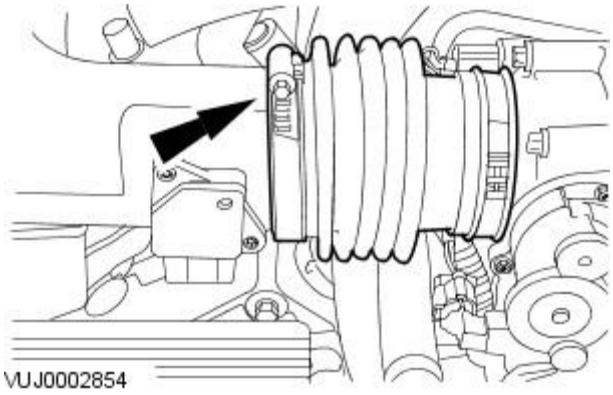

3. Disconnect the air cleaner outlet pipe.

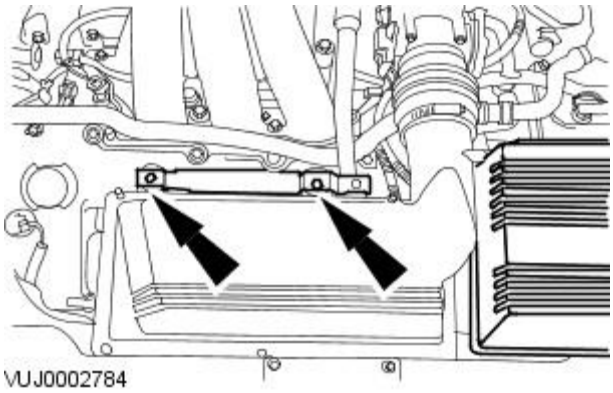

4. Remove the engine cover mounting plate.

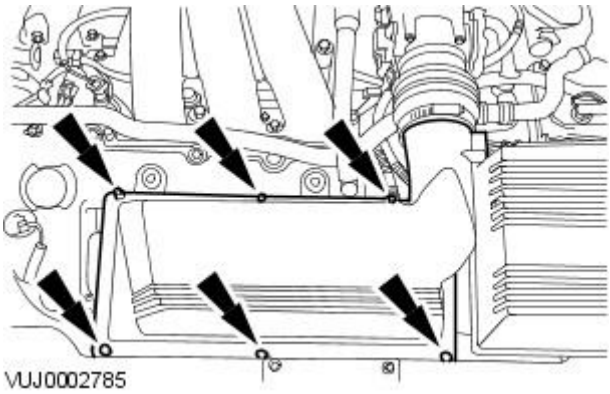

5. Remove the air cleaner cover.

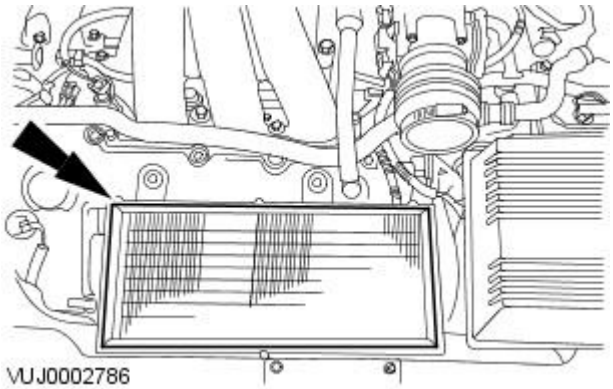

6. Remove the air cleaner element.

Installation

1. To install, reverse the removal procedure.

Intake Air Distribution and Filtering - 2.0L NA V6 - AJV6 / 2.5L NA V6 - AJV6 / 3.0L NA V6 - AJ27 - Air Cleaner Outlet Pipe

Removal and Installation

Removal

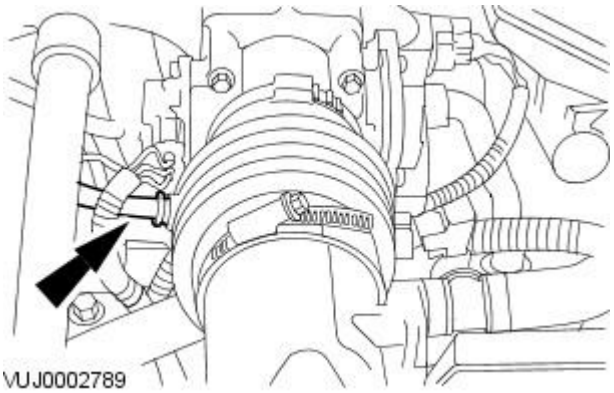

1. Disconnect the positive crankcase ventilation hose.

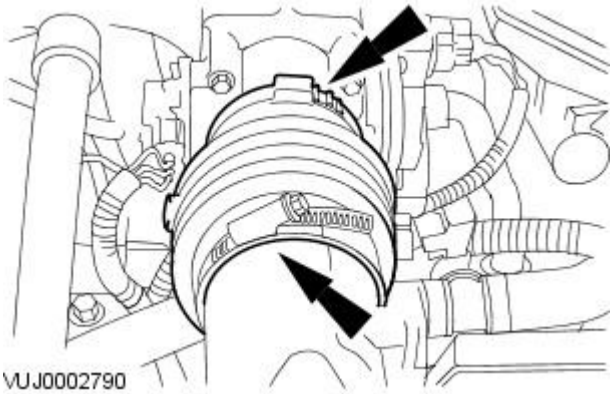

2. Remove the air cleaner outlet pipe.

Installation

1. To install, reverse the removal procedure.

Published: 11-May-2011

Intake Air Distribution and Filtering - 2.0L Duratorq-TDCi / 2.2L Duratorq-TDCi (110kW / 150PS) - Puma -

Torque Specifications

Description	Nm	lb-ft	lb-in
Charge air cooler retaining bolts	7	–	62
Charge air cooler outlet hose	4	–	35
Charge air cooler intake hose	4	–	35
Power steering fluid cooler retaining bolts	7	–	62

Intake Air Distribution and Filtering - 2.0L Duratorq-TDCi / 2.2L Duratorq-TDCi (110kW / 150PS) - Puma - Intake Air Distribution and Filtering

Description and Operation

Vehicles with 2.0L diesel engine

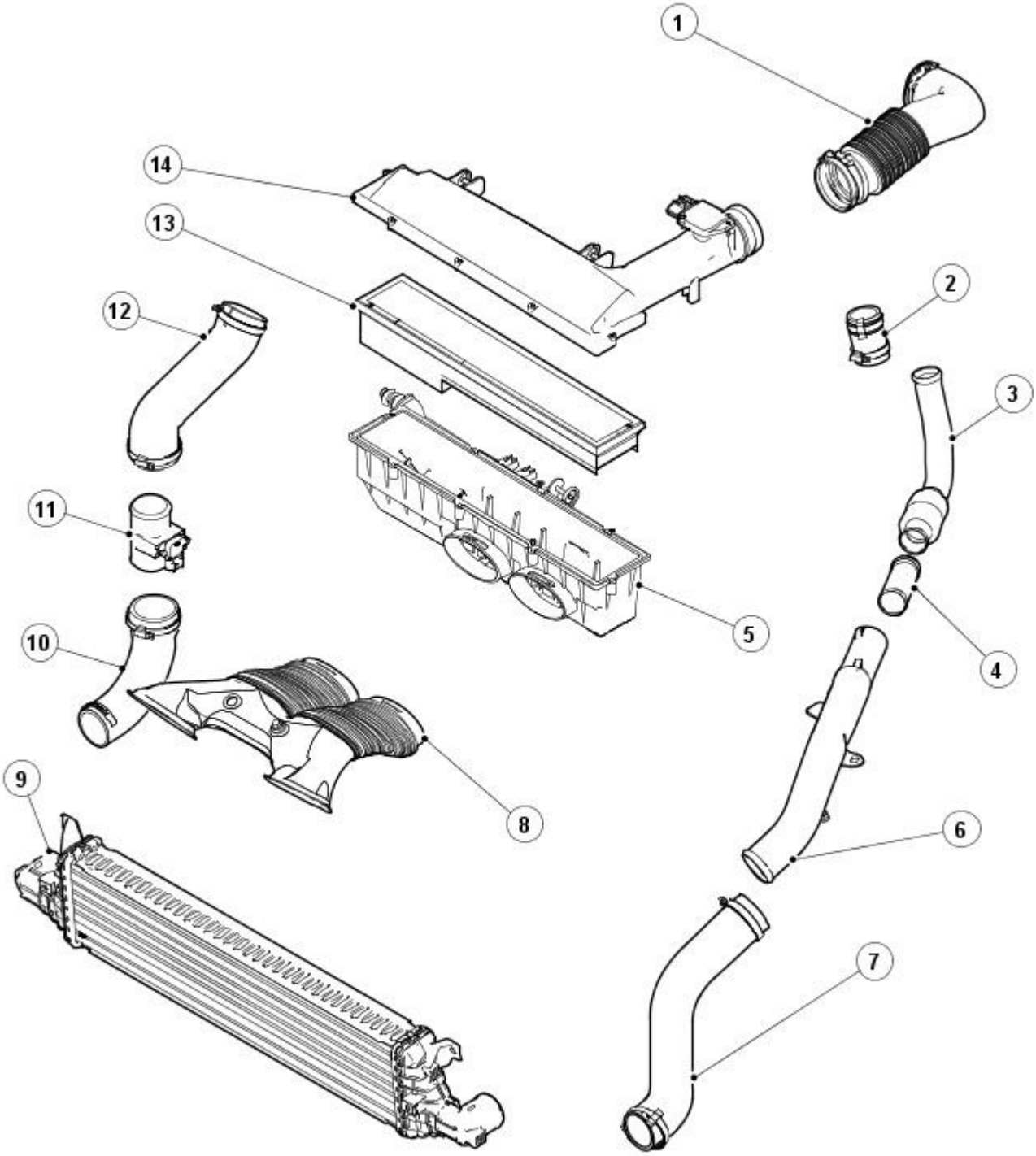

E44052

Item	Part Number	Description
1	-	Air cleaner outlet pipe
2	-	Turbo to turbo outlet pipe connecting hose
3	-	Turbo outlet pipe
4	-	Turbo outlet pipe to charge air cooler intake pipe connecting hose
5	-	Air cleaner
6	-	Charge air cooler intake pipe
7	-	Charge air cooler intake hose
8	-	Air cleaner intake pipe
9	-	Charge air cooler
10	-	Charge air cooler outlet hose
11	-	Thermal manifold absolute pressure (TMAP) sensor

12	-	Intake manifold inlet hose
13	-	Air cleaner element
14	-	Air cleaner cover

Vehicles with 2.2L diesel engine

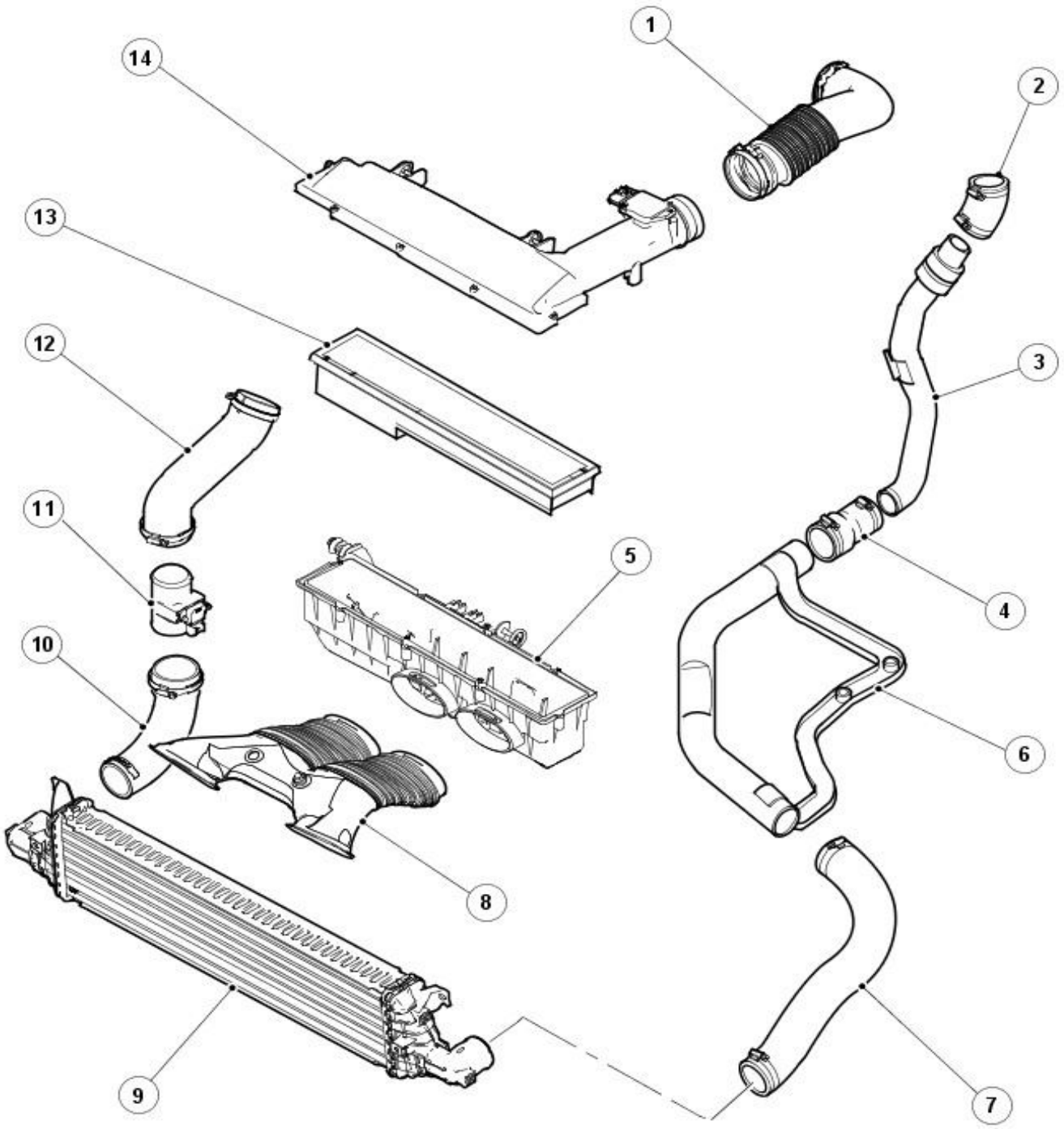

E67313

Item	Part Number	Description
1	-	Air cleaner outlet pipe
2	-	Turbo to turbo outlet pipe connecting hose
3	-	Turbo outlet pipe
4	-	Turbo outlet pipe to charge air cooler intake pipe connecting hose
5	-	Air cleaner
6	-	Charge air cooler intake pipe
7	-	Charge air cooler intake hose
8	-	Air cleaner intake pipe
9	-	Charge air cooler
10	-	Charge air cooler outlet hose
11	-	Thermal manifold absolute pressure (TMAP) sensor
12	-	Intake manifold inlet hose
13	-	Air cleaner element
14	-	Air cleaner cover

Intake Air Distribution and Filtering - 2.0L Duratorq-TDCi / 2.2L Duratorq-TDCi (110kW / 150PS) - Puma - Intake Air Distribution and Filtering

Diagnosis and Testing

Inspection and Verification

1. **1.** Verify the customer concern.
2. **2.** Visually inspect for obvious signs of mechanical damage.

Visual Inspection Chart

Mechanical
• Check the air cleaner housing for restriction/blockage • Check the air cleaner element for restriction/blockage • Check the charge air cooler for damage

3. **3.** If an obvious cause for an observed or reported concern is found, correct the cause (if possible) before proceeding to the next step.

Pinpoint tests

WARNING: The following tests may involve working in close proximity to hot components. Make sure adequate protection is used. Failure to follow this instruction may result in personal injury.

PINPOINT TEST A : CHECK FOR RESTRICTION IN AIR INTAKE	
TEST CONDITIONS	**DETAILS/RESULTS/ACTIONS**
A1: CHECK FOR AIR FLOW THROUGH INTAKE SYSTEM	
	1 Inspect the air intake pipes between the air cleaner intake and the charge air cooler inlet (pay particular attention to the joints between the metal and rubber pipes).
	2 Disconnect the air intake pipe at the charge air cooler inlet and the turbocharger outlet.
	3 Using a suitable length of hose blow gently through the pipe.
	Is there an unrestricted flow of air through the hose? **Yes** GO to A2. **No** Remove the pipe and remove the cause of the restriction/blockage. Reassemble the removed parts and test the vehicle for normal operation.
A2: CHECK FOR AIR FLOW TO THE TURBOCHARGER	
	1 Disconnect the air intake pipe between the air cleaner and the turbocharger inlet.
	2 Check the pipe for restriction/blockage (this is a large-bore pipe, and can be checked visually).
	Is there an unrestricted flow of air through the hose? **Yes** GO to A3. **No** Clear the restriction/blockage. Reassemble the removed parts and test the vehicle for normal operation.
A3: CHECK FOR AIR FLOW TO THE CHARGE AIR COOLER	
	1 Remove the radiator splash shield.
	2 Disconnect the intake pipe from between the charge air cooler and the intake manifold.
	3 Using a suitable length of hose, blow gently through the pipe.
	Is there an unrestricted flow of air through the pipe? **Yes** GO to A4. **No** Clear the restriction/blockage. Reassemble the removed parts and test the vehicle for normal operation.
A4: CHECK FOR AIR FLOW THROUGH THE CHARGE AIR COOLER	
	1 Using a suitable length of hose, blow through the charge air cooler and monitor the flow.
	Is there an unrestricted flow of air through the charge air cooler? **Yes** GO to A5. **No** INSTALL a new charge air cooler. REFER to: Charge Air Cooler - 2.2L Duratorq-TDCi (110kW/150PS) - Puma (303-12B Intake Air Distribution and Filtering - 2.0L Duratorq-TDCi/2.2L Duratorq-TDCi (110kW/150PS) - Puma, Removal and Installation).
A5: CHECK FOR AIR FLOW THROUGH THE TURBOCHARGER	
	1 Using a suitable length of hose, blow through the turbocharger and monitor the flow.
	Is there an unrestricted flow of air through the turbocharger? **Yes** No restriction found in the air intake. Check for other possible causes for the customer concern. **No** Remove and inspect the turbocharger. REFER to Section 303-04A Fuel Charging and Controls / 303-04B Fuel Charging and Controls / 303-04C Fuel Charging and Controls - Turbocharger.

Intake Air Distribution and Filtering - 2.0L Duratorq-TDCi / 2.2L Duratorq-TDCi (110kW / 150PS) - Puma - Air Cleaner

Removal and Installation

Removal

All vehicles

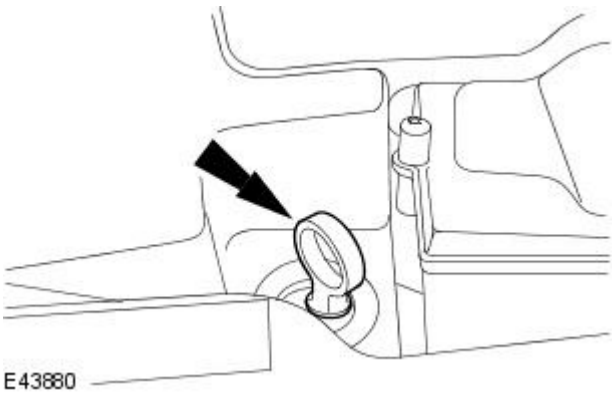

1. Remove the oil level indicator.

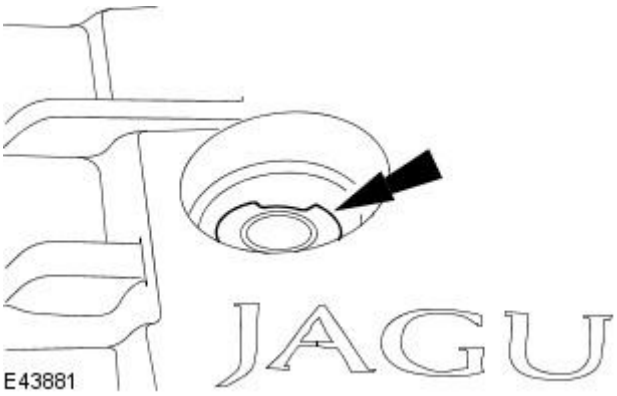

2. Remove the oil filler cap.

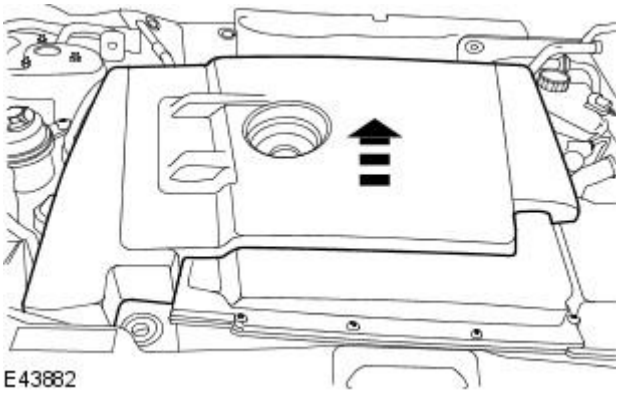

3. NOTE: Install the oil filler cap and oil level indicator to prevent foreign material entering the valve cover.

Remove the engine cover.

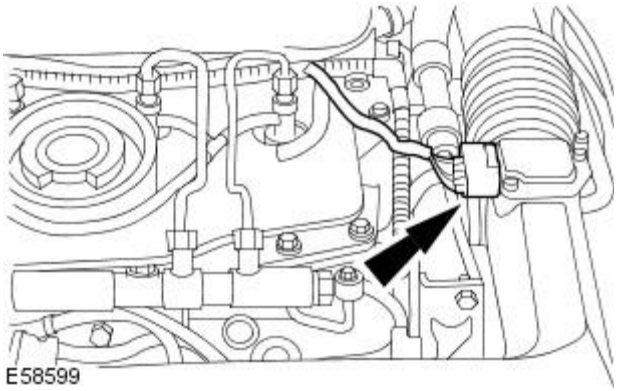

4. Disconnect the mass air flow (MAF) sensor electrical connector.

5. Detach the air cleaner outlet pipe.

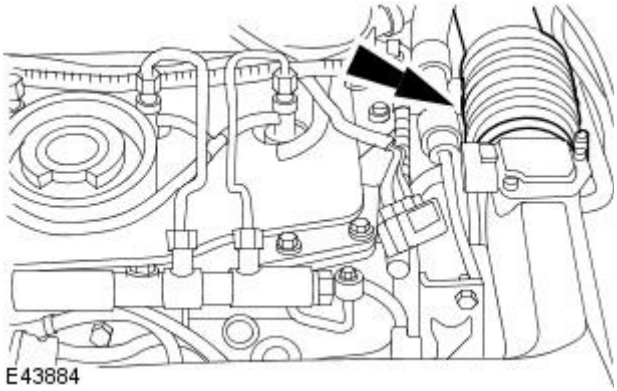

Vehicles built up to VIN:E43868

6. Disconnect the electrical connectors.

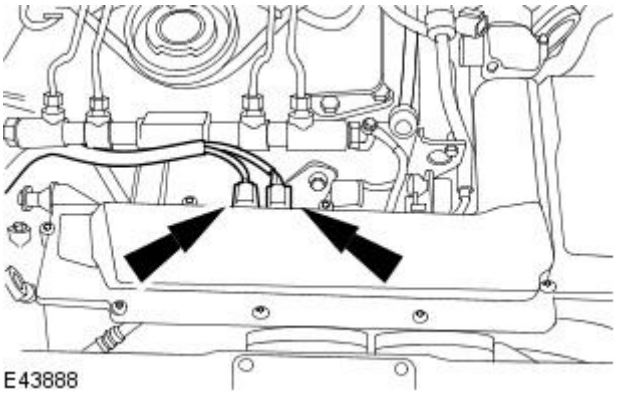

Vehicles built from VIN:E43869

7. Disconnect the electrical connector.

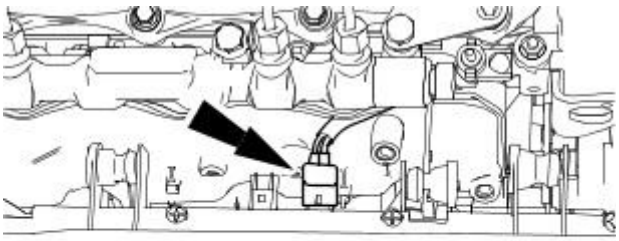

E58600

All vehicles

8. Detach the vacuum pipe from the air cleaner.

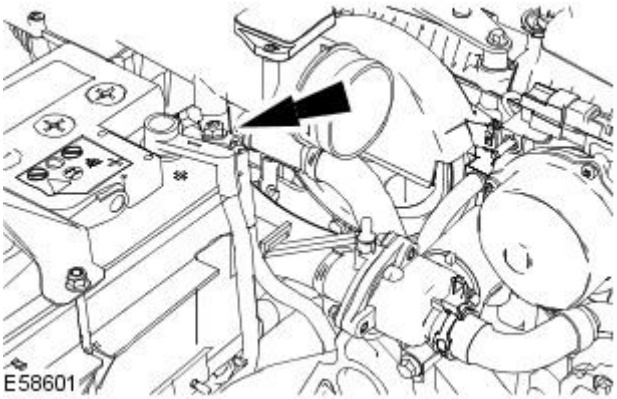

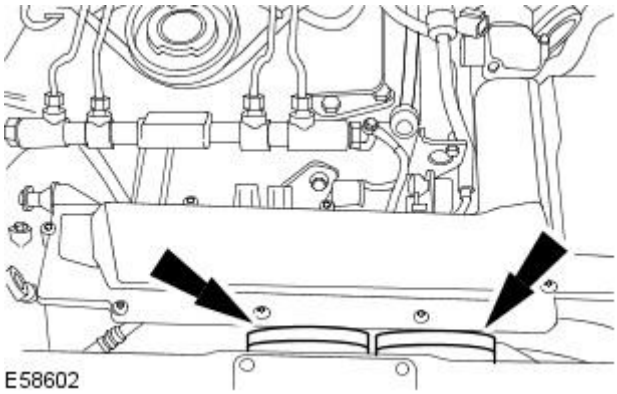

9. Detach the air cleaner intake pipe.

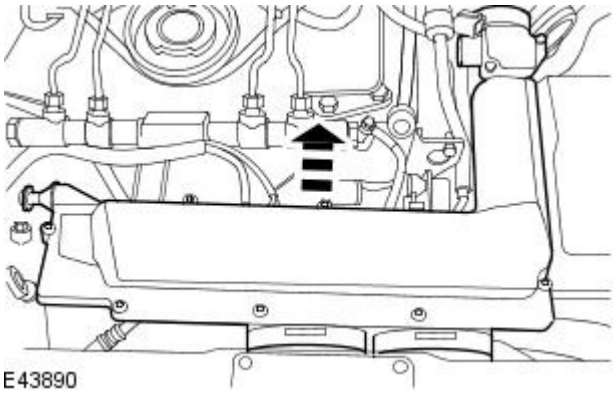

10. Remove the air cleaner.

Installation

1. To install, reverse the removal procedure.

Intake Air Distribution and Filtering - 2.0L Duratorq-TDCi / 2.2L Duratorq-TDCi (110kW / 150PS) - Puma - Air Cleaner Element

Removal and Installation

Removal

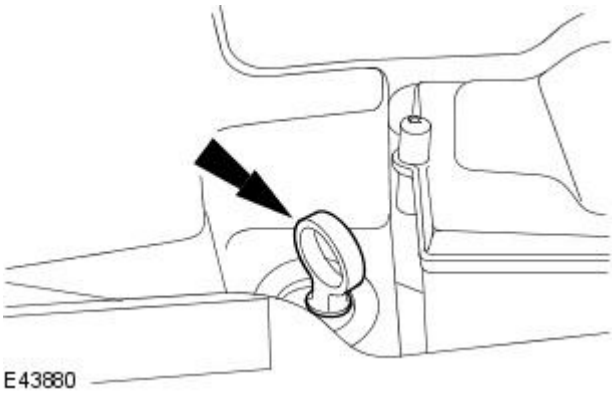

1. Remove the oil level indicator.

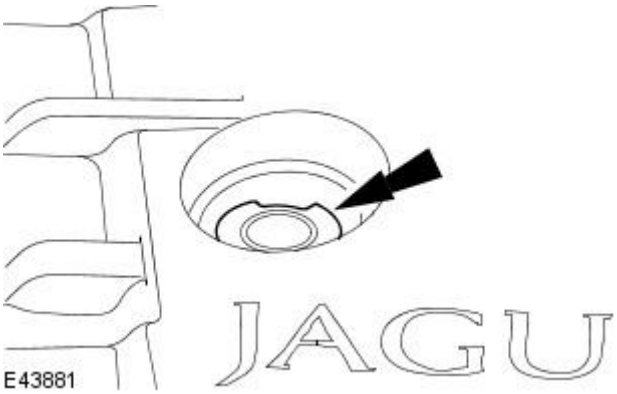

2. Remove the oil filler cap.

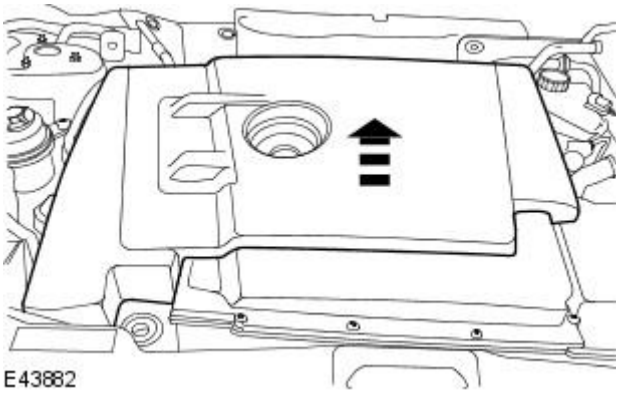

3. Remove the engine cover.

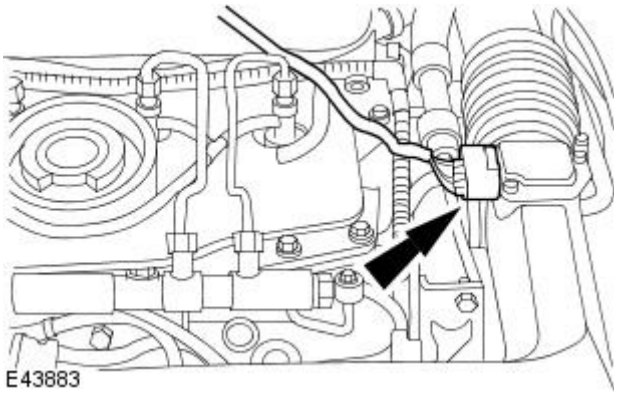

4. Disconnect the mass air flow (MAF) sensor electrical connector.

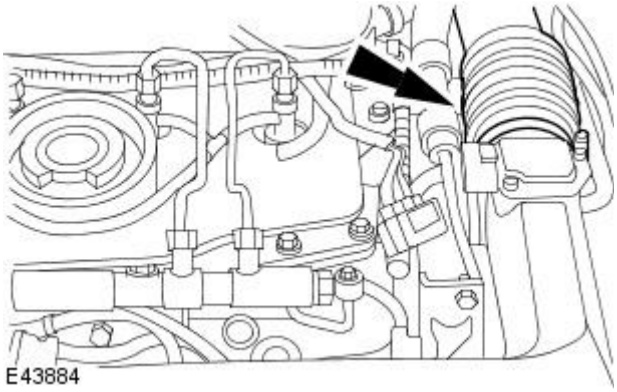

5. Detach the air cleaner outlet pipe.

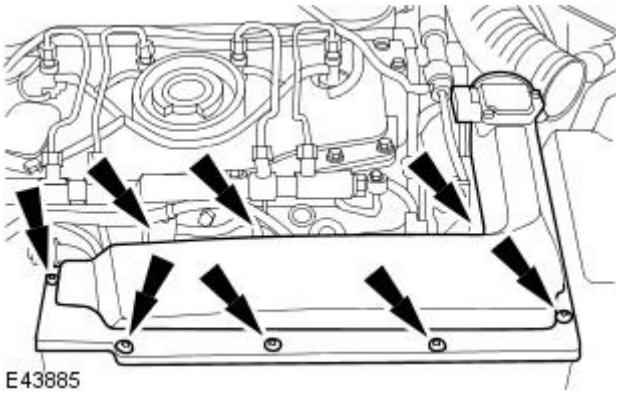

6. Detach the air cleaner cover.

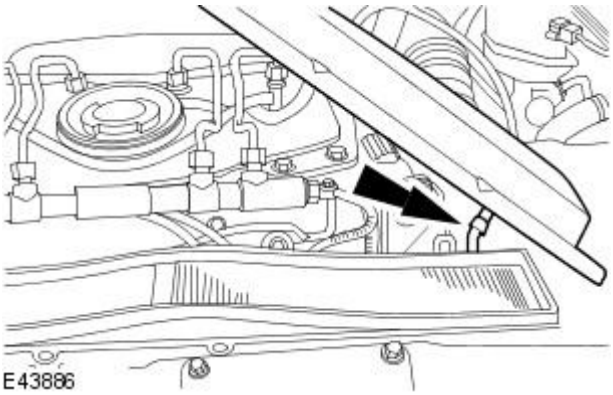

7. Remove the air cleaner cover.

- Disconnect the breather pipe.

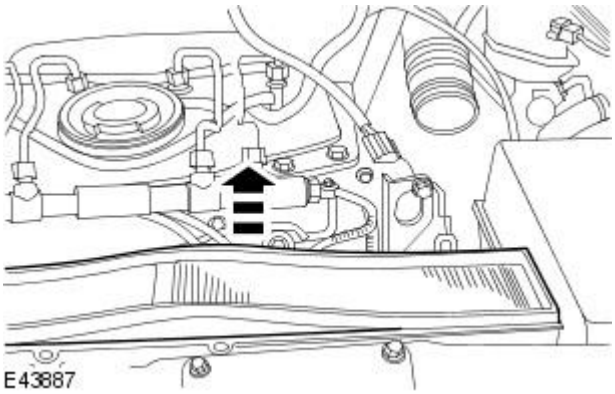

8. Remove the air cleaner element.

Installation

1. To install, reverse the removal procedure.

Intake Air Distribution and Filtering - 2.0L Duratorq-TDCi / 2.2L Duratorq-TDCi (110kW / 150PS) - Puma - Air Cleaner Outlet Pipe

Removal and Installation

Removal

All vehicles

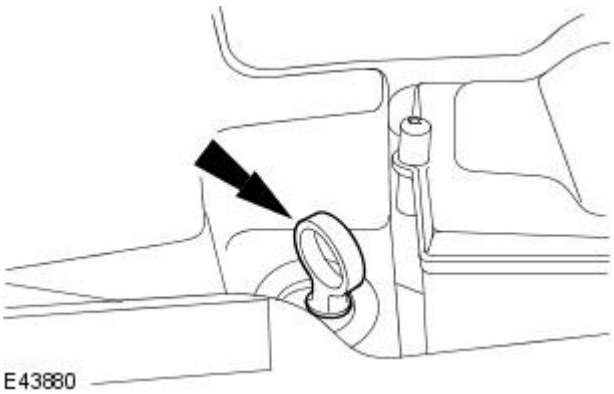

1. Remove the oil level indicator.

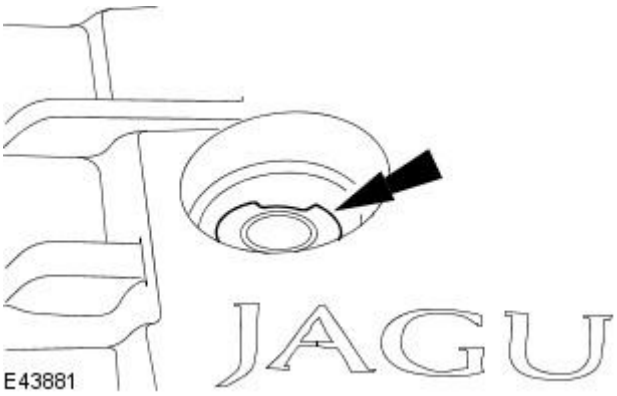

2. Remove the oil filler cap.

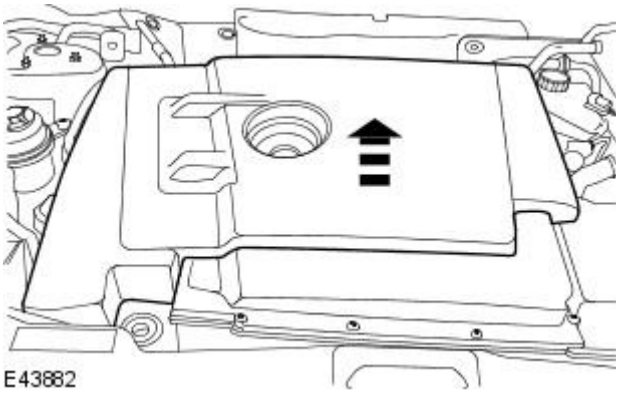

3. NOTE: Install the oil filler cap and oil level indicator to prevent foreign material entering the valve cover.

Remove the engine cover.

Vehicles built up to VIN:E43868

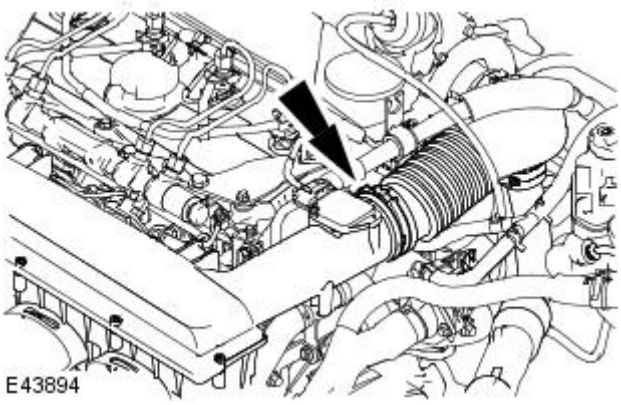

4. Detach the air cleaner outlet pipe.

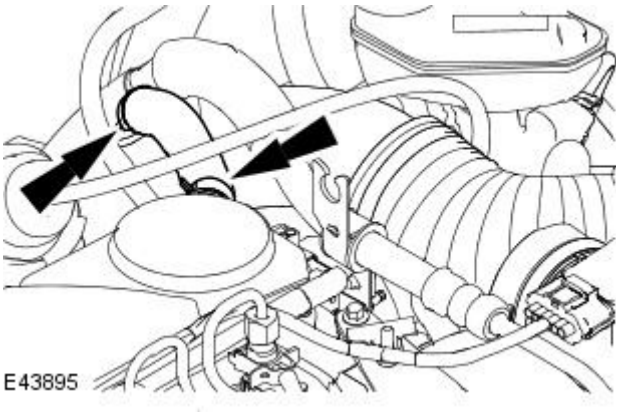

5. Remove the positive crankcase ventilation hose.

- Remove and discard the positive crankcase ventilation hose retaining clips.

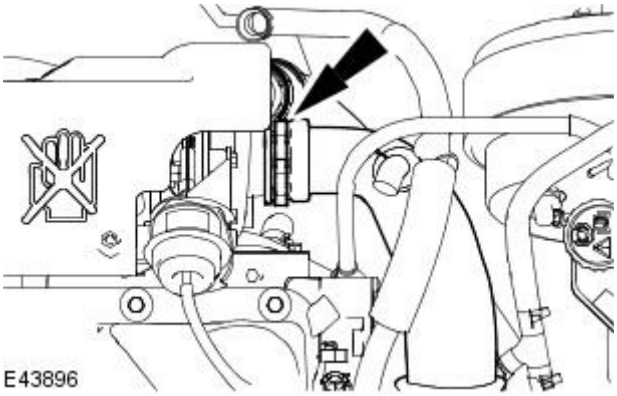

6. Remove the air cleaner outlet pipe.

- Remove and discard the air cleaner outlet pipe retaining clip.

Vehicles built from VIN:E43869

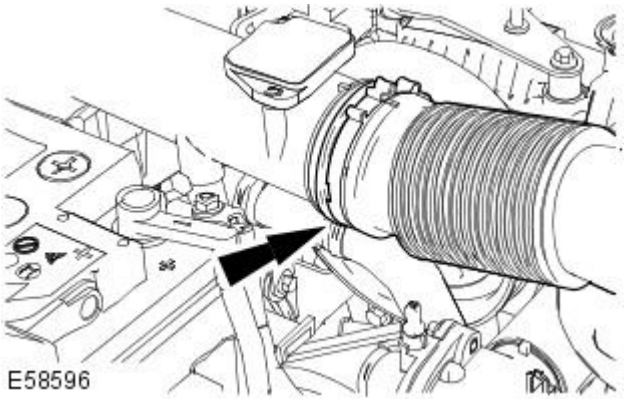

7. Detach the air cleaner outlet pipe.

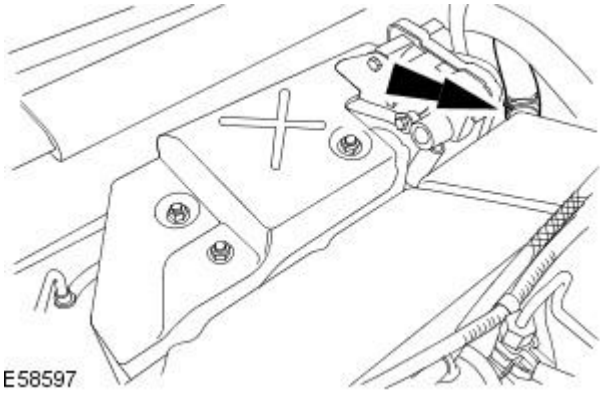

8. Remove the positive crankcase ventilation hose.

- Remove and discard the positive crankcase ventilation hose retaining clips.

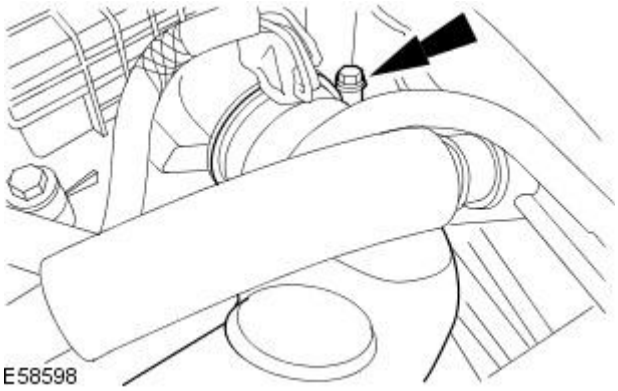

9. Remove the air cleaner outlet pipe.

- Remove and discard the air cleaner outlet pipe retaining clip.

Installation

1. NOTE: Install new positive crankcase ventilation hose retaining clips.

• NOTE: Install a new air cleaner outlet pipe retaining clip.

To install, reverse the removal procedure.

Intake Air Distribution and Filtering - 2.0L Duratorq-TDCi / 2.2L Duratorq-TDCi (110kW / 150PS) - Puma - Charge Air Cooler2.0L Duratorq-TDCi

Removal and Installation

Removal

E43762

1. Remove the radiator splash shield.
   For additional information, refer to: Radiator Splash Shield (501-02 Front End Body Panels, Removal and Installation).
2. Remove the air splitter grille.

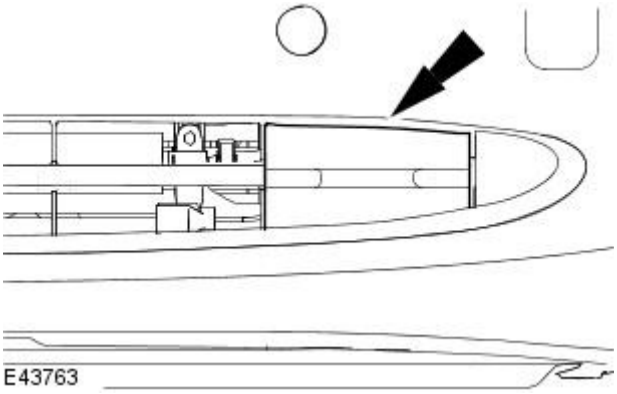

E43763

3. NOTE: Left-hand shown, right-hand similar.

   Remove the air splitter grille finish panel.

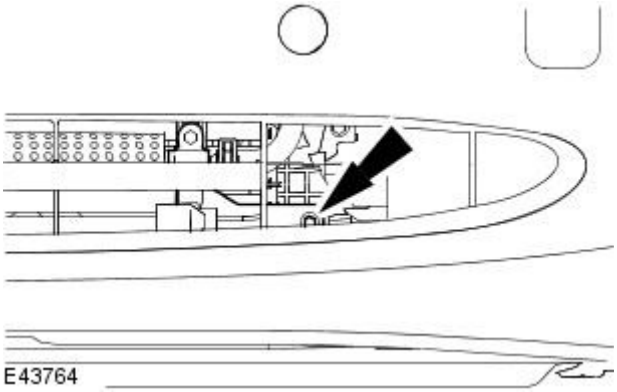

E43764

4. NOTE: Left-hand shown, right-hand similar.

   Detach the power steering fluid cooler.

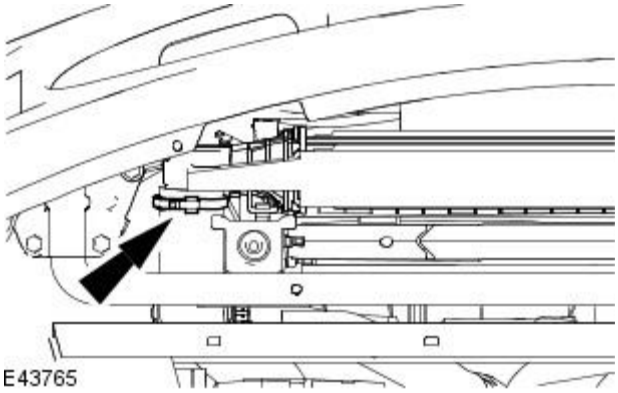

E43765

5. Detach the charge air cooler outlet hose from the charge air cooler.

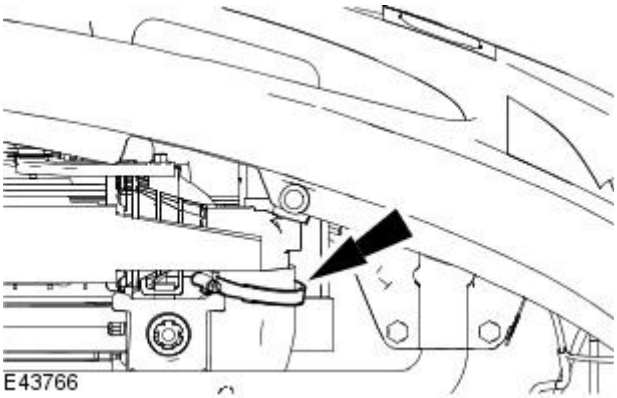

6. Detach the charge air cooler intake hose from the charge air cooler.

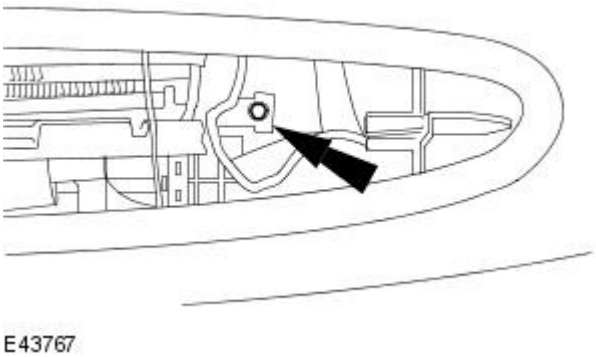

7. NOTE: Left-hand shown, right-hand similar.

Remove the charge air cooler retaining bolt.

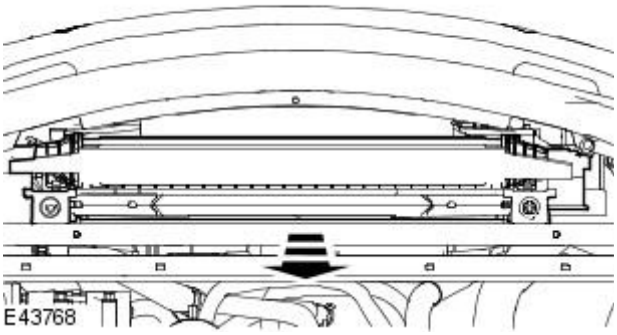

8. Remove the charge air cooler.

Installation

1. NOTE: Make sure the charge air cooler hoses are not split or cracked and are free of grease and contaminants.

To install, reverse the removal procedure.

2. NOTE: Left-hand shown, right-hand similar.

Tighten to 7 Nm.

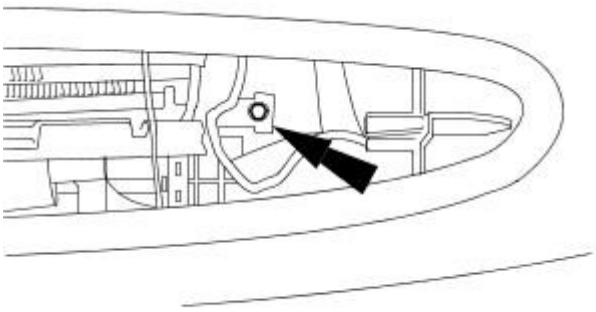

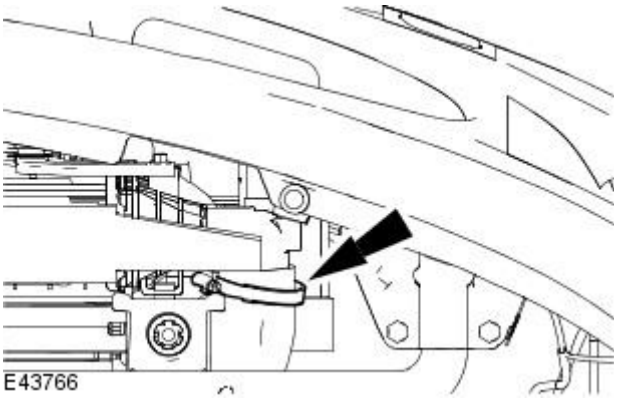

3. Tighten to 4 Nm.

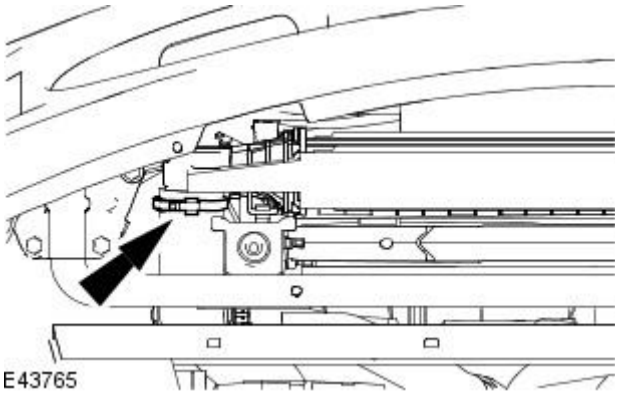

4. Tighten to 4 Nm.

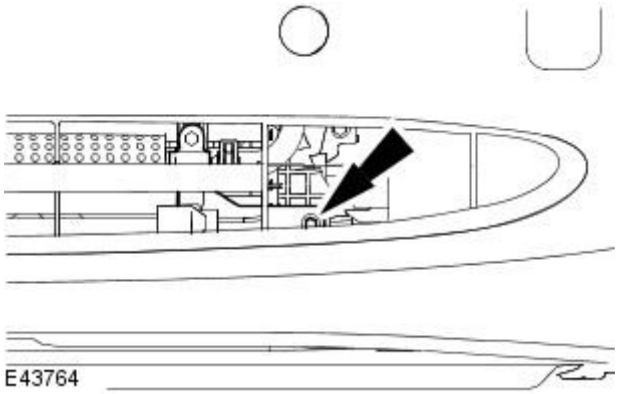

5. NOTE: Left-hand shown, right-hand similar.

Tighten to 7 Nm.

Intake Air Distribution and Filtering - 2.0L Duratorq-TDCi / 2.2L Duratorq-TDCi (110kW / 150PS) - Puma - Charge Air Cooler2.2L Duratorq-TDCi (110kW / 150PS) - Puma

Removal and Installation

Removal

1. Remove the front bumper cover.
   For additional information, refer to: Front Bumper Cover (501-19 Bumpers, Removal and Installation).

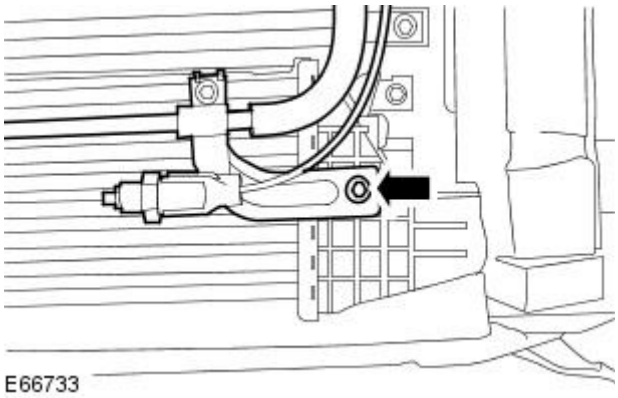

2. NOTE: Left-hand shown, right-hand similar.

   Detach the power steering fluid cooler.

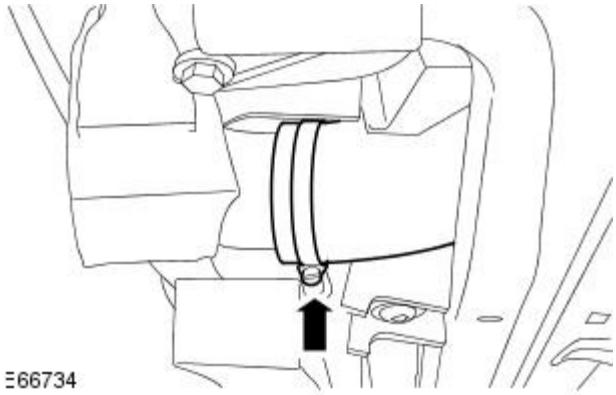

3. Detach the charge air cooler outlet hose from the charge air cooler.

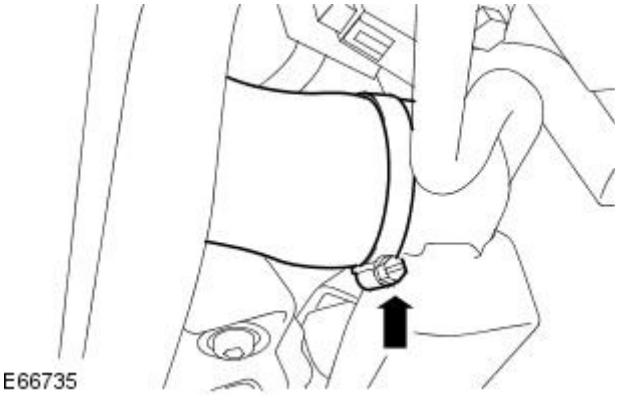

4. Detach the charge air cooler intake hose from the charge air cooler.

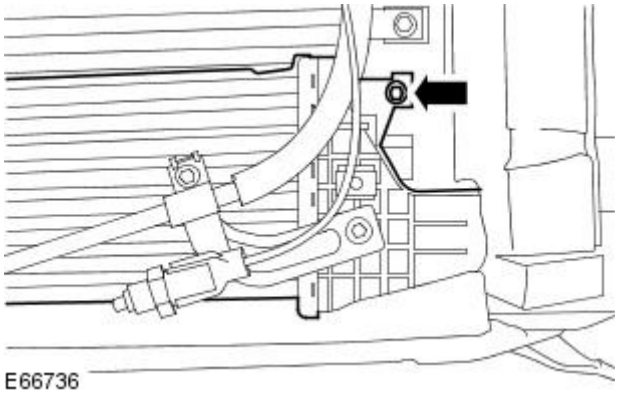

5. NOTE: Left-hand shown, right-hand similar.

   Remove the charge air cooler.

Installation

1. NOTE: Make sure the charge air cooler hoses are not split or cracked and are free of grease and contaminants.

To install, reverse the removal procedure.

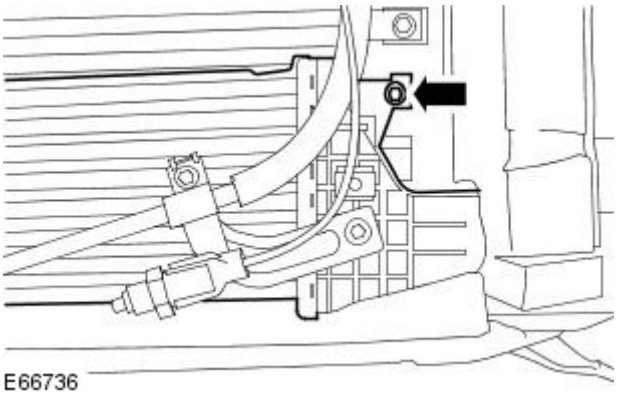

2. NOTE: Left-hand shown, right-hand similar.

Tighten to 7 Nm.

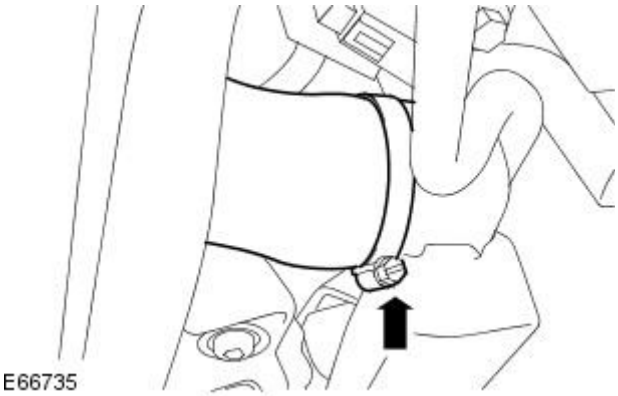

3. Tighten to 4 Nm.

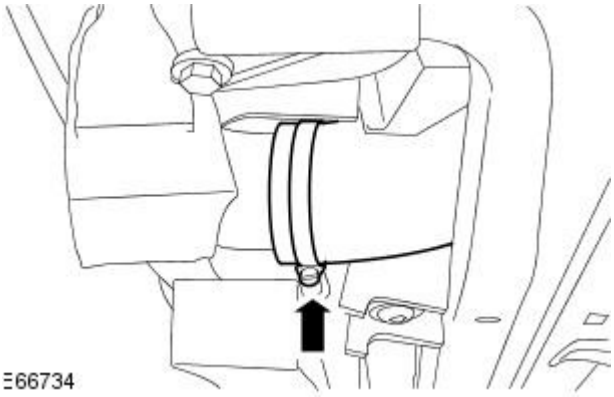

4. Tighten to 4 Nm.

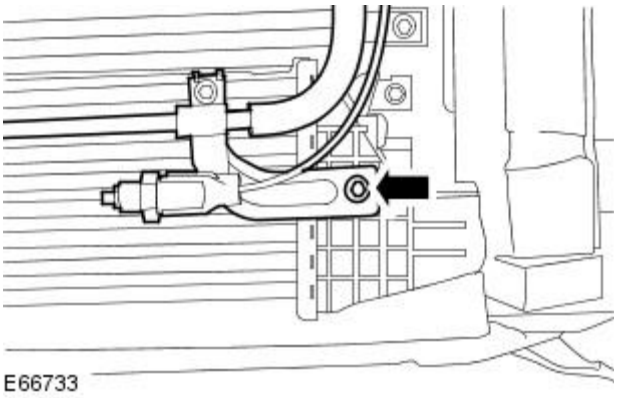

5. NOTE: Left-hand shown, right-hand similar.

Tighten to 7 Nm.

Published: 11-May-2011

Evaporative Emissions -

Torque Specifications

Description	Nm	lb-ft	lb-in
Evaporative emission canister retaining nuts and bolts	5	-	44
Accelerator cable retaining bracket retaining bolts - vehicles with 2.0L engine	9	-	80
Fuel tank support strap retaining bolts	25	18	-
Fuel tank filler pipe to fuel tank hose retaining clip	3	-	27

Evaporative Emissions - Evaporative Emissions

Description and Operation

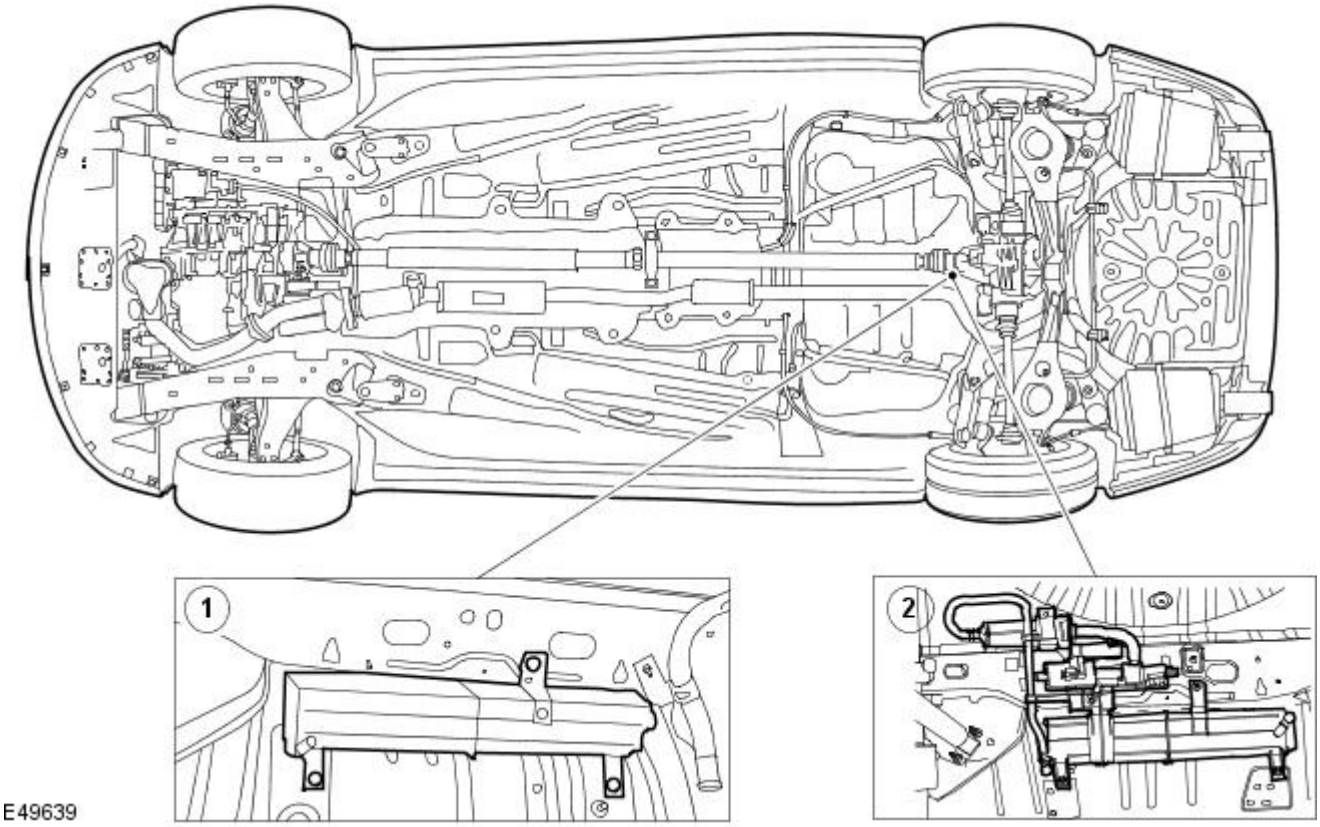

Item	Part Number	Description
1	—	Evaporative emission canister - non federal market vehicles
2	—	Evaporative emission canister - federal market vehicles

• NOTE: 2.5L and 3.0L shown, 2.0L similar.

The evaporative emission fuel vapor management system consists of an evaporative emission canister and a canister purge valve. A combination of rigid and flexible low permeation hoses connect the fuel tank to the evaporative emission canister and canister purge valve intake manifold.

To satisfy LEV2 emission requirements, the fuel vapor management system uses a solenoid controlled canister close valve and a fuel tank pressure sensor which are used during the engine management system on-board diagnostic routines.

When the canister purge valve is closed, the fuel tank vapor is vented into the canister through the fuel tank roll-over valves. The canister absorbs the fuel vapor and prevents the release of hydrocarbons into the atmosphere. When the vapor management valve is cycled, the canister is exposed to the intake manifold vacuum and the fuel vapor deposits are drawn into the manifold where they mix with the incoming air/fuel charge. This air/fuel mixture ratio is controlled by the engine management system.

The evaporative emission fuel vapor management system is controlled by the engine control module (ECM) according to calibrated data tables.

Evaporative Emissions - Evaporative Emissions2.0L NA V6 - AJV6

Diagnosis and Testing

1. **1.** Visually inspect for obvious signs of mechanical or electrical damage, blown fuses, etc.
2. **2.** If an obvious cause for an observed or reported concern is found, correct the cause (if possible) before proceeding to the next step.
3. **3.** If the concern is not visually evident, verify the symptom and proceed with diagnosis, using the Jaguar approved diagnostic system, where available.
4. **4.** The DTC summaries are generated to support the Jaguar approved diagnostic system, but also provide the basis for diagnosis of OBD related concerns using a suitable generic scan tool, in conjunction with the electrical guides. Until the DTC summaries and electrical guides are available, the evaporative emissions system can only be accurately diagnosed using the Jaguar approved diagnostic system. For additional information, refer to Dealer technical support.

Evaporative Emissions - Evaporative Emissions2.5L NA V6 - AJV6 / 3.0L NA V6 - AJ27

Diagnosis and Testing

Preliminary Inspection

1. **1.** Visually inspect for obvious signs of mechanical or electrical damage, blown fuses, etc.
2. **2.** If an obvious cause for an observed or reported concern is found, correct the cause (if possible) before proceeding to the next step.
3. **3.** If the concern is not visually evident, verify the symptom and proceed with diagnosis, using the Jaguar approved diagnostic system, where available.
4. **4.** Where K-Line equipment is available, it should be used as an aid to diagnosis.

Diagnostic Drive Cycles

Following the setting of a DTC, the appropriate repairs must be carried out, and the normal operation of the system checked. This will be done by performing a series of drive cycles which will enable the vehicle to operate the Evaporative Emissions system as a function check. The following drive cycles cover the use of the Jaguar approved diagnostic system, GDS510 instrument, and a test with no additional equipment, where possible.

Flow check monitor drive cycle conditions (non-Federal)

• NOTE: These conditions must be satisfied before the test is commenced.

This drive cycle should be performed following rectification work on the system.

- Make sure the fuel tank is between one quarter and three quarters full. (Adding fuel will increase vapor generation; the diagnostic will not run if the vapor concentration is too great).
- Make sure the ambient air temperature is above -5°C (23°F).

Flow check monitor drive cycle (non-Federal)

- Drive the vehicle for a minimum of 15 minutes, avoiding severe or excessive fuel movement.
- Avoiding excessive fuel movement, gently bring the vehicle to rest. (Coast to a stop).
- Allow the vehicle to idle for two minutes.

Full Evaporative system monitor drive cycle conditions

• NOTE: These conditions must be satisfied before the test is commenced.

- Make sure the fuel filler cap is correctly fitted. (Minimum three clicks).
- Clear the DTCs. (Perform a code clear, even if no codes are present. This will reset TIDs).
- Make sure the fuel tank is between one quarter and three quarters full. (Adding fuel will increase vapor generation; the diagnostic will not run if the vapor concentration is too great).
- Drive the vehicle for a minimum of two minutes, and until fully warm. (Temperature gauge just below mid-point).
- Make sure that the purge valve is operating, either by touch, sound, or using datalogger. (Purge vapor management valve-duty cycle).
  - If the purge is not active, perform the "Drive cycle for green engine control module (ECM)" in this section.

Full Evaporative system monitor drive cycle

- Drive the vehicle to a suitable road where the test can be carried out, switch off the ignition.
- Leave the ignition switched off for 30 seconds.
- Restart the engine, accelerate briskly to 80 Kilometres per hour (50 miles per hour), making sure that the engine speed reaches at least 3500 RPM for a minimum of five seconds.

40 thou test, using the Jaguar approved diagnostic system

- Avoiding high engine loads, drive the vehicle steadily between 64 and 97 Kilometres per hour. (40 and 60 miles per hour). Using the Jaguar approved diagnostic system, monitor the Evaporative valve duty cycle (Purge vapor management valve-duty cycle), CCV status (Canister close valve-vapor recovery system), and the FTPS (Fuel tank pressure-vapor recovery system). The Jaguar approved diagnostic system will give an indication when the test is active. Dependant on the level of vapor concentration, it may take up to 30 minutes for the test to initialise. (Vapor concentration cannot be measured using the Jaguar approved diagnostic equipment). When the test has initialised (CCV closed), it will take up to 90 seconds to complete. Avoid excessive fuel movement while the test is active.

20 thou test, using the Jaguar approved diagnostic system

- Continue driving the vehicle steadily between 64 and 97 Kilometres per hour. (40 and 60 miles per hour). avoiding high engine loads for a further 10 minutes.
- Avoiding excessive fuel movement, gently bring the vehicle to rest. (Coast to a stop).
- Allow the vehicle to idle for 2 minutes.
- Use the Jaguar approved diagnostic system to monitor the Evaporative valve duty cycle (Purge vapor management valve-duty cycle), CCV status (Canister close valve-vapor recovery system), and the FTPS (Fuel tank pressure-vapor recovery system). The Jaguar approved diagnostic system will give an indication when the test is active. When the test has initialised (CCV closed), it will take up to 90 seconds to complete.

If the 20 thou test has not run, it is likely that the vapor concentration in the purge system is too great. In this case, carry out the following -

- Drive the vehicle steadily for a further 30 minutes, avoiding excessive fuel movement.
- Avoiding excessive fuel movement, gently bring the vehicle to rest. (Coast to a stop).
- Allow the vehicle to idle for 2 minutes.
- Use the Jaguar approved diagnostic system to monitor the Evaporative valve duty cycle (Purge vapor management valve-duty cycle), CCV status (Canister close valve-vapor recovery system), and the FTPS (Fuel tank pressure-vapor recovery system). The Jaguar approved diagnostic system will give an indication when the test is active. When the test has initialised (CCV closed), it will take up to 90 seconds to complete.

If the 20 thou test fails to run a second time, repeat the entire test.

- Check for DTCs. Rectify as indicated.

40 thou test, using GDS510

- Avoiding high engine loads, drive the vehicle steadily between 64 and 97 Kilometres per hour. (40 and 60 miles per hour)
- When the test has initialised, using the GDS510, monitor the Evaporative valve duty cycle, CCV status, and the FTPS. (The GDS510 will give an indication when the test is active).
- When the test has initialised (CCV closed), it will take up to 90 seconds to complete.
- To make sure that the test has completed, TID 08 in mode 6 must be checked. (If the test has not completed, this TID will display 0. Any other value indicates test completion).
- If the test did not complete, repeat the test.

20 thou test, using GDS510

- Continue driving the vehicle steadily between 64 and 97 Kilometres per hour. (40 and 60 miles per hour) avoiding high engine loads for a further 10 minutes.
- Avoiding excessive fuel movement, gently bring the vehicle to rest. (Coast to a stop).
- Allow the vehicle to idle for 2 minutes.
- When the test has initialised, using the GDS510, monitor the Evaporative valve duty cycle, CCV status, and the FTPS. (The GDS510 will give an indication when the test is active).
- When the test has initialised (CCV closed), it will take up to 90 seconds to complete.
- To make sure that the test has completed, TID 06 in mode 6 must be checked. (If the test has not completed, this TID will display 0. Any other value indicates test completion).
- If the test did not complete, repeat the test.
- If the 20 thou test has not run, it is likely that the vapor concentration in the purge system is too great. In this case, drive the vehicle steadily for a further 30 minutes, avoiding excessive fuel movement, then repeat the test.
- Check for DTCs. Rectify as indicated.

40 thou and 20 thou tests using no additional equipment

The test procedure and conditions are as for the Jaguar approved diagnostic system or GDS510, but no confirmation of the test having run is possible without the use of one of these instruments. The DTC will be set if the fault still exists, but the possibility exists that the conditions for the test to run may not have been met, in which case, the DTC may not be set until the owner reproduces the conditions in which the fault originally occurred.

Drive cycle for "green" ECM

- To enable the ECM to re-learn fuelling adaptions.

• NOTE: This procedure should be performed whenever the vehicle battery has been disconnected.

Due to component tolerance and wear during the normal running of a vehicle, fuelling and air requirements for an engine will vary over time. The ECM has the ability to adjust for this variation by "learning" the level of compensation that is required. (These compensation values are referred to as adaptions)

If the vehicle battery is disconnected, all adaptions held within the ECM will be lost (ie, set to Zero) The ECM is then referred to as "green". To enable the vehicle to function correctly, the ECM must "relearn" these adaptions.

There are four areas or sites that need to be relearnt.

- Allow the vehicle to idle until fully warm. (Temperature gauge just below mid-point).
- Allow to idle for a further three minutes, minimum.
- Drive the vehicle with the air conditioning OFF on a level road using a constant throttle, or speed control if fitted, for at least one minute in the following gears, at the stated engine speeds for each of the sites below.

The vehicle speed is for guidance only. DO NOT use the vehicle speed as the target to set adaptions.

"Green" ECM drive cycle chart. Site 1

Engine / transmission software level	3.0L Man Z65 on	3.0L Auto Z65 on	2.5L Man Z65 on	2.5L Auto Z65 on
GEAR	N	P/N	N	P/N
ENGINE SPEED	Idle	Idle	Idle	Idle
VEHICLE SPEED (GUIDE ONLY)	0MPH	0MPH	0MPH	0MPH

"Green" ECM drive cycle chart. Site 2

Engine / transmission software level	3.0L Man Z65 on	3.0L Auto Z65 on	2.5L Man Z65 on	2.5L Auto Z65 on
GEAR	3rd	3rd	3rd	3rd
ENGINE SPEED	2000RPM	1750RPM	2000RPM	1750RPM
VEHICLE SPEED (GUIDE ONLY)	45KPH (28MPH)	39KPH (24MPH)	47KPH (29MPH)	37KPH (23MPH)

"Green" ECM drive cycle chart. Site 3

Engine / transmission software level	3.0L Man Z65 on	3.0L Auto Z65 on	2.5L Man Z65 on	2.5L Auto Z65 on
GEAR	4th	4th	4th	4th
ENGINE SPEED	2250RPM	2000RPM	2250RPM	2250RPM
VEHICLE SPEED (GUIDE ONLY)	68KPH (42MPH)	64KPH (40MPH)	72KPH (45MPH)	69KPH (43MPH)

"Green" ECM drive cycle chart. Site 4

Engine / transmission software level	3.0L Man Z65 on	3.0L Auto Z65 on	2.5L Man Z65 on	2.5L Auto Z65 on
GEAR	4th	4th	4th	4th
ENGINE SPEED	2750RPM	2500RPM	2750RPM	2750RPM
VEHICLE SPEED (GUIDE ONLY)	84KPH (52MPH)	80KPH (50MPH)	87KPH (54MPH)	87KPH (54MPH)

Bring the vehicle to rest, allow to idle for one minute.

WARNING: The following tests may involve parts which are hot.

If sufficient adaptions have occurred, the Evaporative valve should now be operating. This can be verified manually by either touching or listening to the valve. By touching the Evaporative valve, it should be possible to feel the valve switching. Listening to the Evaporative valve is best done using a workshop stethoscope, through which it should be possible to hear the valve operating.

Diagnostic Trouble Code Charts

Diagnostic Trouble Code Chart

Diagnostic Trouble Code	Description	Possible Source	Action
P0441	Evaporative purge valve flow check.	• Evaporative purge valve. • Hose and connections.	GO to Pinpoint Test A.
P0442	Leak detected. 40 thou.	• Hoses and connections. • Fuel tank filler cap. • Carbon canister. • Canister close valve.	GO to Pinpoint Test B.
P0443	Evaporative purge valve leaking.	Evaporative purge valve.	GO to Pinpoint Test C.
P0444	Evaporative purge valve circuit open.	Evaporative purge valve or circuit.	GO to Pinpoint Test D.
P0445	Evaporative purge valve circuit shorted.	Evaporative purge valve or circuit.	GO to Pinpoint Test E.
P0446	Canister close valve stuck closed.	• Filter box. • Hoses and connections. • CCV. • Fuel tank vapor port. • Carbon canister.	GO to Pinpoint Test F.
P0447	Canister close valve circuit open circuit.	CCV or circuit.	GO to Pinpoint Test G.
P0448	Canister close valve circuit shorted.	CCV or circuit.	GO to Pinpoint Test H.
P0450	Fuel tank Pressure Sensor malfunction	FTPS.	GO to Pinpoint Test I.
P0452	FTPS low input.	FTPS or circuit.	GO to Pinpoint Test J.
P0453	FTPS high input.	FTPS or circuit.	GO to Pinpoint Test J.
P0455	Gross leak.	• Fuel tank and lines. • Fuel filler cap. • Carbon Canister. • Evaporative purge valve stuck closed. • CCV. • Blockage in vapor lines from engine to fuel tank.	GO to Pinpoint Test K.
P0456	Leak detected. 20 thou.	• Fuel tank and lines. • Fuel filler cap. • Carbon Canister. • CCV.	GO to Pinpoint Test L.

Pinpoint Tests

PINPOINT TEST A : P0441. EVAPORATIVE PURGE VALVE FLOW CHECK. VALVE STUCK CLOSED	
TEST CONDITIONS	**DETAILS/RESULTS/ACTIONS**
A1: CHECK EVAPORATIVE PURGE VALVE IS OPERATING	
	1 Disconnect the Vapor pipe from the inlet port of the Evaporative purge valve (ie, from fuel tank).
	2 RUN the engine for 2 minutes, making sure that the engine reaches normal operating temperature.
	3 CHECK that the Evaporative purge valve is operating, by touch or by sound. (Using a stethoscope, it will be possible to hear the valve operating).
	Is the valve operating? **Yes** GO to A2. **No** CHECK for DTC P0444, P0445. Conduct "green" ECM drive cycle. For additional information, see "diagnostic drive cycles" above.
A2: CHECK FOR VACUUM AT EVAPORATIVE PURGE VALVE	
	1 CHECK for vacuum at the valve.
	Is a vacuum present? **Yes** Possible intermittent fault. CLEAR the DTC. Carry out a flow check monitor drive cycle. RECHECK DTCs. For additional information, see "diagnostic drive cycles" above. **No** GO to A3.
A3: CHECK FOR BLOCKAGES IN THE SYSTEM	
	1 CHECK for blockages in the intake manifold drilling, and the pipe from the intake manifold to the Evaporative purge valve.
	Was a blockage found? **Yes** Rectify the blockage. CLEAR the DTC. Carry out a flow check monitor drive cycle. For additional information, see "diagnostic drive cycles" above. **No** INSTALL a new Evaporative purge valve. REFER to Evaporative Emission Canister Purge Valve in this section. CLEAR the DTC. Carry out a flow check monitor drive cycle. RECHECK DTCs. For additional information, see "diagnostic drive cycles" above.

PINPOINT TEST B : P0442. LEAK DETECTED. 40 THOU

TEST CONDITIONS	DETAILS/RESULTS/ACTIONS
B1: CHECK FUEL FILLER CAP FITMENT AND CONDITION OF PIPES AND CONNECTORS	
	1 Make sure that the fuel filler cap is correctly installed and tightened. (Minimum 3 clicks).
	2 Check the condition of all accessible pipes and connectors in the vapor line.
	Are all pipes and connectors in good condition? **Yes** Suspect concern with fuel tank assembly or carbon canister assembly. **No** REPAIR as necessary. CLEAR the DTC. Carry out a full Evaporative system monitor drive cycle. RECHECK DTCs. For additional information, see "diagnostic drive cycles" above.

PINPOINT TEST C : P0443. EVAPORATIVE PURGE VALVE LEAKING

TEST CONDITIONS	DETAILS/RESULTS/ACTIONS
C1: CHECK EVAPORATIVE PURGE VALVE INTEGRITY	
	1 Disconnect the outlet pipe from the Evaporative purge valve. (From valve to manifold).
	2 Apply a vacuum to the valve outlet pipe.
	Does the valve hold vacuum? **Yes** Possible intermittent fault. CLEAR the DTC. Carry out a full Evap system monitor drive cycle. RECHECK DTCs. For additional information, see "diagnostic drive cycles" above. **No** INSTALL a new Evaporative purge valve. REFER to Evaporative Emission Canister Purge Valve in this section. CLEAR the DTC. Carry out a full Evaporative system monitor drive cycle. RECHECK DTCs. For additional information, see "diagnostic drive cycles" above.

PINPOINT TEST D : P0444. EVAPORATIVE PURGE VALVE CIRCUIT OPEN CIRCUIT

TEST CONDITIONS	DETAILS/RESULTS/ACTIONS
D1: CHECK SUPPLY VOLTAGE TO EVAPORATIVE PURGE VALVE	
	1 Disconnect Evaporative purge valve electrical connector, JB170.
	2 Turn the ignition switch to the ON position.
	3 Measure the voltage at JB170, pin 1 (GU).
	Is the voltage greater than 10 volts? **Yes** GO to D2. **No** REPAIR the circuit between Evaporative purge valve electrical connector, JB170, pin 1 (GU) and the EMS control relay. For additional information, refer to wiring diagrams. CLEAR the DTC. Turn the ignition switch to the ON position. Leave switched on for minimum 30 seconds. RECHECK DTCs. For additional information, see "diagnostic drive cycles" above.
D2: CHECK THE EVAPORATIVE PURGE VALVE SIGNAL WIRE FOR CONTINUITY	
	1 Disconnect the ECM electrical connector, EN16.
	2 Measure the resistance between EN16, pin 66 (UY) and JB170, pin 2 (UY).
	Is the resistance less than 5 ohms? **Yes** GO to D3. **No** REPAIR the circuit between EN16, pin 66 (UY) and JB170, pin 2 (UY). CLEAR the DTC. Turn the ignition switch to the ON position. Leave switched on for minimum 30 seconds. RECHECK DTCs. For additional information, see "diagnostic drive cycles" above.
D3: CHECK THE EVAPORATIVE PURGE VALVE SIGNAL WIRE FOR SHORT TO GROUND	
	1 Measure the resistance between JB170, pin 2 (UY) and GROUND.
	Is the resistance less than 10,000 ohms? **Yes** REPAIR the short to ground. For additional information, refer to wiring diagrams. CLEAR the DTC. Turn the ignition switch to the ON position. Leave switched on for minimum 30 seconds. RECHECK DTCs. For additional information, see "diagnostic drive cycles" above. **No** GO to D4.
D4: CHECK THE EVAPORATIVE PURGE VALVE SIGNAL WIRE FOR SHORT TO BATTERY	
	1 Connect the ECM electrical connector, EN16.
	2 Turn the ignition switch to the ON position.
	3 CHECK for a voltage at JB170, pin 2 (UY).
	Is the voltage greater than 1 volt? **Yes** REPAIR the short to battery. For additional information, refer to wiring diagrams. CLEAR the DTC. Turn the ignition switch to the ON position. Leave switched on for minimum 30 seconds. RECHECK DTCs. For additional information, see "diagnostic drive cycles" above. **No** GO to D5.
D5: CHECK THE EVAPORATIVE PURGE VALVE RESISTANCE	
	1 CHECK the resistance between pins 1 and 2 of the Evaporative purge valve.
	Is the resistance 30 to 34 ohms at 20°C (68°F)? **Yes** INSTALL a new ECM. REFER to Section 303-14A Electronic Engine Controls / 303-14B Electronic Engine Controls. Before replacing a ECM, contact Dealer technical support. **No** INSTALL a new Evaporative purge valve. REFER to Evaporative Emission Canister Purge Valve in this section. CLEAR the DTC. Turn the ignition switch to the ON position. Leave switched on for minimum 30 seconds. RECHECK DTCs. For additional information, see "diagnostic drive cycles" above.

PINPOINT TEST E : P0445. EVAPORATIVE PURGE VALVE CIRCUIT SHORTED

TEST CONDITIONS	DETAILS/RESULTS/ACTIONS
E1: CHECK EVAPORATIVE PURGE VALVE SIGNAL WIRE FOR SHORT TO GROUND	
	1 Disconnect Evaporative purge valve electrical connector JB170.
	2 Disconnect ECM electrical connector, EN16.
	3 Measure the resistance between JB170, pin 2 (UY) and ground.
	Is the resistance less than 10,000 ohms? **Yes** REPAIR the short to ground. For additional information, refer to wiring diagrams. CLEAR the DTC. Turn the ignition switch to the ON position. Leave switched on for minimum 30 seconds. RECHECK DTCs. For additional information, see "diagnostic drive cycles" above. **No** NO short found. A short in the Evaporative purge valve supply circuit may result in a blown fuse 36, PDFB. See initial checks. CLEAR the DTC. Turn the ignition switch to the ON position. Leave switched on for minimum 30 seconds. RECHECK DTCs. For additional information, see "diagnostic drive cycles" above.

PINPOINT TEST F : P0446. CANISTER CLOSE VALVE STUCK CLOSED	
TEST CONDITIONS	DETAILS/RESULTS/ACTIONS
F1: CHECK FOR FLOW THROUGH SYSTEM	
• NOTE: Depending on the severity of the blockage, it is possible that some difficulty has been experienced during refuelling.	
	1 Disconnect the vapor line from Evaporative purge valve inlet port and apply low pressure.
	2 CHECK for free flow of air through the following, paying attention to kinked or flattened pipes. • Filter. • Interconnecting pipe. (Filter to CCV). • CCV. • Interconnecting pipe. (CCV to carbon canister). • Carbon canister. • Interconnecting pipe. (Carbon canister to fuel tank). • Fuel tank vapor port.
	Is there a restriction? **Yes** RECTIFY as necessary. CLEAR the DTC. Carry out a full Evaporative system monitor drive cycle, RECHECK DTCs. For additional information, see "diagnostic drive cycles" above. **No** CLEAR the DTC. Carry out a full Evaporative system monitor drive cycle, RECHECK DTCs. For additional information, see "diagnostic drive cycles" above.

PINPOINT TEST G : P0447. CANISTER CLOSE VALVE CIRCUIT OPEN CIRCUIT	
TEST CONDITIONS	DETAILS/RESULTS/ACTIONS
G1: CHECK SUPPLY VOLTAGE TO CCV	
	1 Disconnect canister close valve electrical connector, FT5.
	2 Turn the ignition switch to the ON position.
	3 Measure the voltage at FT5, pin 1 (GU).
	Is the voltage greater than 10 volts? **Yes** GO to G2. **No** REPAIR the circuit between FT5, pin 1 (GU) and the EMS control relay. For additional information, refer to wiring diagrams. CLEAR the DTC. Turn the ignition switch to the ON position. Leave switched on for minimum 30 seconds. RECHECK DTCs. For additional information, see "diagnostic drive cycles" above.
G2: CHECK THE CCV SIGNAL WIRE FOR CONTINUITY.	
	1 Disconnect the ECM electrical connector, EN16.
	2 Measure the resistance between EN16, pin 67 (O) and FT5, pin 2 (O).
	Is the resistance less than 5 ohms? **Yes** GO to G4. **No** REPAIR the circuit between EN16, pin 67 (O) and FT5, pin 2 (O). For additional information, refer to wiring diagrams. CLEAR the DTC. Turn the ignition switch to the ON position. Leave switched on for minimum 30 seconds. RECHECK DTCs. For additional information, see "diagnostic drive cycles" above.
G3: CHECK THE CCV SIGNAL WIRE FOR SHORT TO BATTERY	
	1 Turn the ignition switch to the ON position.
	2 CHECK for a voltage at FT5, pin 2 (O).
	Is the voltage greater than 1 volt? **Yes** REPAIR the short to battery. For additional information, refer to wiring diagrams. CLEAR the DTC. Turn the ignition switch to the ON position. Leave switched on for minimum 30 seconds. RECHECK DTCs. For additional information, see "diagnostic drive cycles" above. **No** GO to G4.
G4: CHECK THE CCV RESISTANCE	
	1 CHECK the resistance between pins 1 and 2 of the CCV.
	Is the resistance 25 to 30 Ohms at 20°C (68°F)? **Yes** INSTALL a new ECM. REFER to Section 303-14A Electronic Engine Controls / 303-14B Electronic Engine Controls. Before replacing a ECM, contact Dealer technical support. **No** INSTALL a new CCV. CLEAR the DTC. Turn the ignition switch to the ON position. Leave switched on for minimum 30 seconds. RECHECK DTCs. For additional information, see "diagnostic drive cycles" above.

PINPOINT TEST H : P0448. CCV CIRCUIT SHORTED.	
TEST CONDITIONS	DETAILS/RESULTS/ACTIONS

H1: CHECK CCV SIGNAL WIRE FOR SHORT TO GROUND.	
	1 Disconnect CCV electrical connector, FT5.
	2 Disconnect ECM electrical connector, EN16.
	3 Measure the resistance between FT5, pin 2 (O) and ground.
	Is the resistance less than 10,000 Ohms? **Yes** REPAIR the short to ground. For additional information, refer to wiring diagrams. CLEAR the DTC. Turn the ignition switch to the ON position. Leave switched on for minimum 30 seconds. RECHECK DTCs. For additional information, see "diagnostic drive cycles" above. **No** NO short found. A short in the CCV supply circuit may result in a blown fuse 36, PDFB. See initial checks.

PINPOINT TEST I : P0450. FUEL TANK PRESSURE SENSOR MALFUNCTION.

• NOTE: Prior to commencing this test, REFER to Section 303-14A Electronic Engine Controls / 303-14B Electronic Engine Controls. Electronic Engine Controls, Diagnosis and Testing, sensor supply and ground circuits.

• NOTE: Access to the FTP sensor involves the removal of the fuel tank. To reduce the amount of work necessary, a slave harness and sensor could be used. This can be connected at the access port beneath the rear seat. Tests can then be carried out via the slave harness and sensor. If system operation is normal with the slave harness and sensor, the fault lies in the vehicle's harness or sensor.

TEST CONDITIONS	DETAILS/RESULTS/ACTIONS
I1: CHECK EVAPORATIVE PURGE VALVE IS OPERATING.	
	1 Disconnect electrical connector CA005. (Beneath rear seat).
	2 Turn the ignition switch to the ON position.
	3 Measure the voltage between pins 4 and 6 of CA005.
	Is the voltage 2.9 - 3.7 volts? **Yes** GO to I2. Reconnect CA005. **No** INSTALL a new FTPS. REFER to Section 310-01 Fuel Tank and Lines. Reconnect CA005. CLEAR the DTC. Turn the ignition switch to the ON position. Leave switched on for minimum 30 seconds. RECHECK DTCs. For additional information, see "diagnostic drive cycles" above.
I2: CHECK SIGNAL VOLTAGE AT FTPS.	
	1 Run the engine for two minutes, and until fully warm.
	2 Make sure Evaporative purge valve is operating.
	3 Steadily increase engine speed to 3000 RPM.
	4 Measure the voltage between pins 4 and 6 of CA005.
	Does the voltage reduce? **Yes** Possible intermittent fault. RECHECK DTCs, For additional information, see "diagnostic drive cycles" above. Contact Dealer technical support. **No** INSTALL a new FTPS. REFER to Section 310-01 Fuel Tank and Lines. CLEAR the DTC. Carry out a full Evaporative system monitor drive cycle. RECHECK DTCs. For additional information, see "diagnostic drive cycles" above.

PINPOINT TEST J : P0452, O0453. FUEL TANK PRESSURE SENSOR LOW/HIGH INPUT.

• NOTE: Prior to commencing this test, REFER to Section 303-14A Electronic Engine Controls / 303-14B Electronic Engine Controls. Electronic Engine Controls, Diagnosis and Testing, sensor supply and ground circuits.

• NOTE: Access to the FTP sensor involves the removal of the fuel tank. To reduce the amount of work necessary, a slave harness and sensor could be used. This could be connected at the access port beneath the rear seat. Tests can then be carried out via the slave harness and sensor. If system operation is normal with the slave harness and sensor, the fault lies in the vehicle's harness or sensor.

TEST CONDITIONS	DETAILS/RESULTS/ACTIONS
J1: CHECK FTPS SIGNAL WIRE FOR CONTINUITY UP TO CONNECTOR CA5.	
	1 Disconnect ECM electrical connector, EN16.
	2 Disconnect FTPS electrical connector, CA5.
	3 Check for continuity between EN16, pin 104 (RG) and CA5, pin 4 (RG). • This test will not check the continuity of the harness from CA5 to FT1. If the circuit is continuous to CA5, the fuel tank must be removed and the harness and sensor continuity checked.
	Is the circuit continuous? **Yes** INSTALL a new FTPS, (and/or harness, CA5 to FT1). CLEAR the DTC. Turn the ignition switch to the ON position. Leave switched on for minimum 30 seconds. RECHECK DTCs. For additional information, see "diagnostic drive cycles" above. If the DTC is repeated, INSTALL a new ECM. REFER to Section 303-14A Electronic Engine Controls / 303-14B Electronic Engine Controls. Before replacing a ECM, contact Dealer technical support. **No** REPAIR the circuit between EN16, pin 104 (RG) and CA5, pin 4 (RG). CLEAR the DTC. Carry out a full Evaporative system monitor drive cycle. For additional information, see "diagnostic drive cycles" above. RECHECK DTCs.
J2: CHECK FTPS SUPPLY WIRE FOR SHORT TO GROUND UP TO CONNECTOR CA5	
	1 Measure the resistance between CA5, pin 5 (OY) and GROUND. • This test will not check the integrity of the harness from CA5 to FT1. If the circuit is sound to CA5, the fuel tank must be removed and the harness and sensor continuity checked.
	Is the resistance less than 10,000 ohms? **Yes** REPAIR the short to GROUND. For additional information, refer to wiring diagrams. CLEAR the DTC. Turn the ignition switch to the ON position. Leave switched on for minimum 30 seconds. RECHECK DTCs. For additional information, see "diagnostic drive cycles" above. **No** GO to J3.
J3: CHECK FTPS SIGNAL WIRE FOR SHORT TO GROUND, UP TO CONNECTOR CA5.	
	1 Connect ECM electrical connector, EN16.

	2 Measure the resistance between CA5, pin 4 (RG) and GROUND. ● This test will not check the integrity of the harness from CA5 to FT1. If the circuit is sound to CA5, the fuel tank must be removed and the harness and sensor continuity checked.
	Is the resistance less than 10,000 ohms? **Yes** REPAIR the short to GROUND. For additional information, refer to wiring diagrams. CLEAR the DTC. Turn the ignition switch to the ON position. Leave switched on for minimum 30 seconds. RECHECK DTCs. For additional information, see "diagnostic drive cycles" above. **No** GO to J4.
J4: CHECK FTPS SIGNAL WIRE FOR SHORT TO BATTERY, UP TO CONNECTOR CA5	
	1 Turn the ignition switch to the ON position.
	2 Check for a voltage at CA5, pin 4 (RG). ● This test will not check the integrity of the harness from CA5 to FT1. If the circuit is sound to CA5, the fuel tank must be removed and the harness and sensor continuity checked.
	Is the voltage greater than 1 volt? **Yes** REPAIR the short to battery. For additional information, refer to wiring diagrams. CLEAR the DTC. Turn the ignition switch to the ON position. Leave switched on for minimum 30 seconds. RECHECK DTCs. For additional information, see "diagnostic drive cycles" above. **No** GO to J5.
J5: CHECK FTPS GROUND WIRE FOR SHORT TO BATTERY, UP TO CONNECTOR CA5	
	1 Turn the ignition switch to the ON position.
	2 Check for a voltage at CA5, pin 6 (BG).
	Is the voltage greater than 1 volt? **Yes** REPAIR the short to battery. For additional information, refer to wiring diagrams. CLEAR the DTC. Carry out a full Evaporative system monitor drive cycle, RECHECK DTCs. For additional information, see "diagnostic drive cycles" above. **No** GO to J2.
J6: CHECK FTPS SUPPLY WIRE FOR SHORT TO BATTERY UP TO CONNECTOR CA5	
	1 Connect ECM electrical connector, EN16.
	2 Turn the ignition switch to the ON position.
	3 Check for a voltage at CA5, pin 5 (OY). ● This test will not check the integrity of the harness from CA5 to FT1. If the circuit is sound to CA5, the fuel tank must be removed and the harness and sensor continuity checked.
	Is the voltage greater than 5 volts? **Yes** REPAIR the short to battery. For additional information, refer to wiring diagrams. CLEAR the DTC. Carry out a full Evaporative system monitor drive cycle, RECHECK DTCs. For additional information, see "diagnostic drive cycles" above. **No** INSTALL a new FTPS, (and/or harness, CA5 to FT1). REFER to Section 310-01 Fuel Tank and Lines. CLEAR the DTC. Carry out a full Evaporative system monitor drive cycle, RECHECK DTCs. For additional information, see "diagnostic drive cycles" above. If the DTC is repeated, INSTALL a new ECM. REFER to Section 303-14A Electronic Engine Controls / 303-14B Electronic Engine Controls. Before replacing a ECM, contact Dealer technical support.

PINPOINT TEST K : P0455. GROSS LEAK DETECTED.

TEST CONDITIONS	DETAILS/RESULTS/ACTIONS
K1: CHECK FUEL FILLER CAP FITMENT AND CONDITION OF PIPES AND CONNECTORS.	
	1 Make sure that the fuel filler cap is correctly installed and tightened. (Minimum 3 clicks).
	2 Check the condition of all accessible pipes and connectors in the vapor line.
	Are all pipes and connectors in good condition? **Yes** Suspect concern with - 1. Blockage in vapor line. (Engine to fuel tank).2. Evaporative purge valve stuck closed.3. Fuel tank assembly.4. Carbon canister assembly. **No** REPAIR as necessary. CLEAR the DTC. Carry out a full Evaporative system monitor drive cycle, RECHECK DTCs. For additional information, see "diagnostic drive cycles" above.

PINPOINT TEST L : P0456. LEAK DETECTED. 20 THOU.

TEST CONDITIONS	DETAILS/RESULTS/ACTIONS
L1: CHECK FUEL FILLER CAP FITMENT AND CONDITION OF PIPES AND CONNECTORS.	
	1 Make sure that the fuel filler cap is correctly installed and tightened. (Minimum 3 clicks).
	2 Check the condition of all accessible pipes and connectors in the vapor line.
	Are all pipes and connectors in good condition? **Yes** Suspect concern with fuel tank assembly or carbon canister assembly. **No** REPAIR as necessary. CLEAR the DTC. Carry out a full Evaporative system monitor drive cycle, RECHECK DTCs. For additional information, see "diagnostic drive cycles" above.

Evaporative Emissions - Evaporative Emission Canister2.0L NA V6 - AJV6

Removal and Installation

Removal

1. Raise and support the vehicle.
   For additional information, refer to: Lifting (100-02 Jacking and Lifting, Description and Operation).
2. Disconnect the evaporative emission canister pipe.

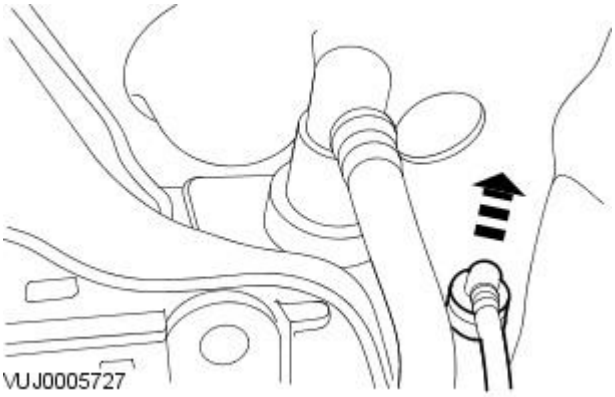

3. Disconnect the evaporative emission canister pipe.

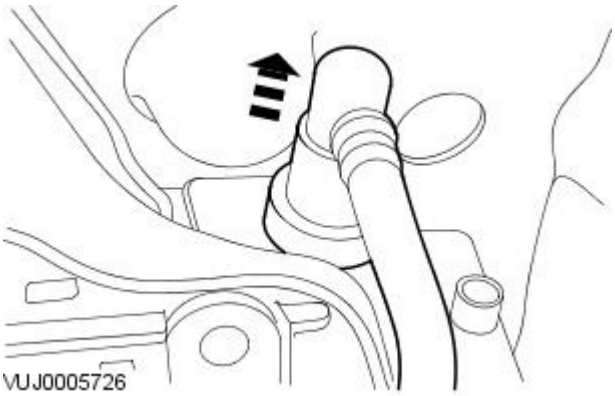

4. Remove the evaporative emission canister retaining bolts.

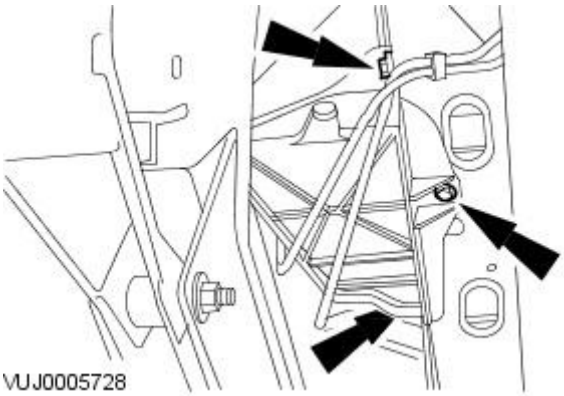

5. Remove the evaporative emission canister.

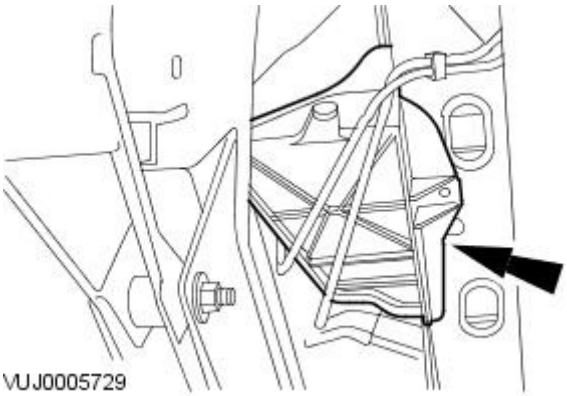

Installation

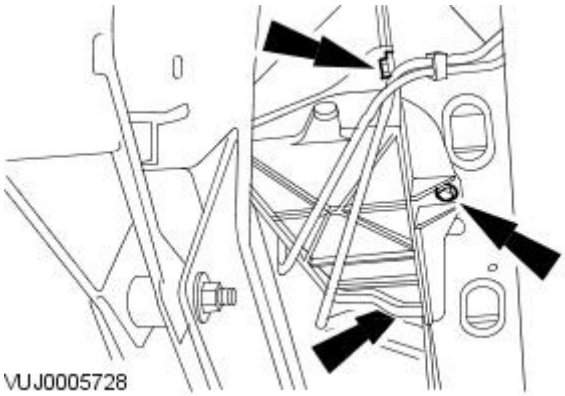

1. To install, reverse the removal procedure.

- Tighten to 5 Nm.

Evaporative Emissions - Evaporative Emission Canister2.5L NA V6 - AJV6 / 3.0L NA V6 - AJ27

Removal and Installation

Special Tool(s)	
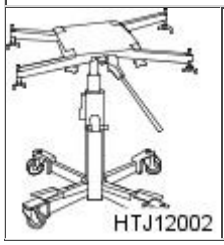 HTJ12002	Powertrain Assembly Jack (federal market vehicles only) HTJ1200-2

Removal

• WARNINGS:

Do not smoke or carry lighted tobacco or an open flame of any type when working on or near any fuel related components. Highly flammable vapors are always present and may ignite. Failure to follow these instructions may result in personal injury.

Do not carry or operate cellular phones when working on or near any fuel related components. Highly flammable vapors are always present and may ignite. Failure to follow these instructions may result in personal injury.

Due to the heavy weight, make sure that the fuel tank is securely attached to the powertrain assembly jack when installing.

This procedure involves fuel handling. Be prepared for fuel spillage at all times and always observe fuel handling precautions. Failure to follow these instructions may result in personal injury.

• NOTE: Non federal market vehicles, refer to steps 1 to 3.

• NOTE: Federal market vehicles, refer to steps 4 to 22.

1. NOTE: Non federal market vehicles only.

Remove the fuel tank.
For additional information, refer to: Fuel Tank - 2.5L NA V6 - AJV6/3.0L NA V6 - AJ27 (310-01 Fuel Tank and Lines, Removal and Installation).

2. NOTE: Non federal market vehicles only.

Remove the evaporative emission canister rear retaining nut.

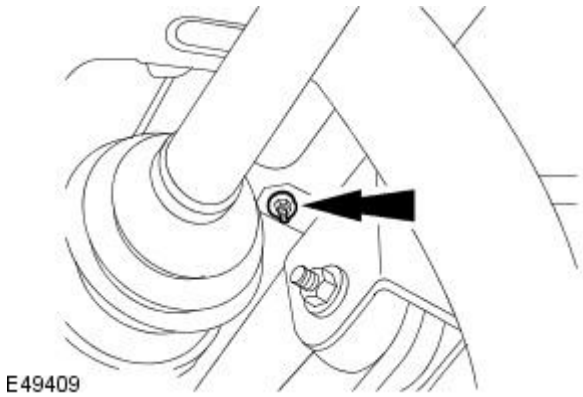

E49409

3. NOTE: Non federal market vehicles only.

Remove the evaporative emission canister.

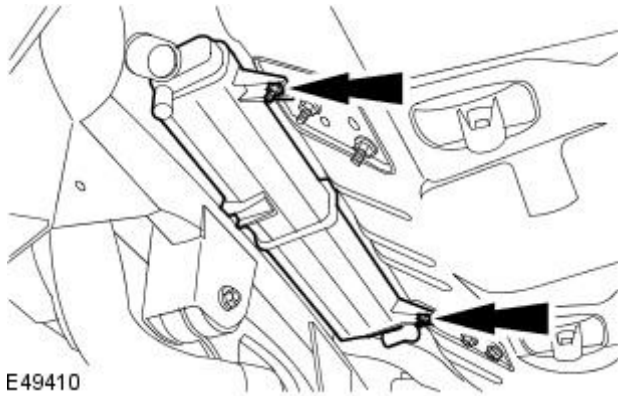

E49410

4. NOTE: Federal market vehicles only.

Disconnect the battery ground cable.
For additional information, refer to: Battery Disconnect and Connect (414-01 Battery, Mounting and Cables, General Procedures).

5. NOTE: Federal market vehicles only.

Remove the fuel filler cap.

6. NOTE: Federal market vehicles only.

De-pressurize the fuel system.
For additional information, refer to: Fuel System Pressure Release (310-00 Fuel System - General Information, General Procedures).

7. NOTE: Federal market vehicles only.

Remove the rear seat cushion.
For additional information, refer to: Rear Seat Cushion (501-10 Seating, Removal and Installation).

8. NOTE: Federal market vehicles only.

Detach the wiring harness grommet.

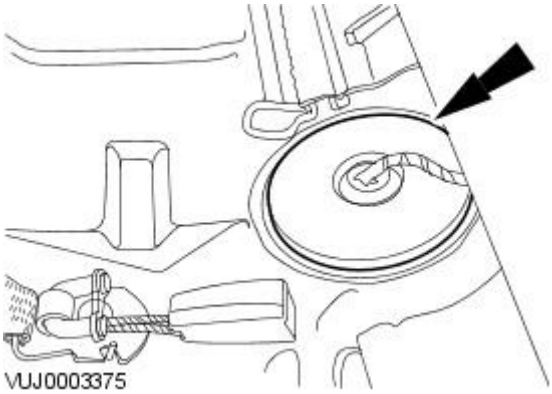
VUJ0003375

9. NOTE: Federal market vehicles only.

Detach the electrical connector.

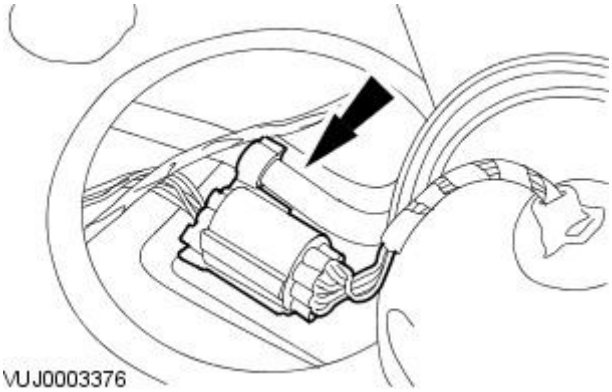
VUJ0003376

10. NOTE: Federal market vehicles only.

Disconnect the electrical connector.

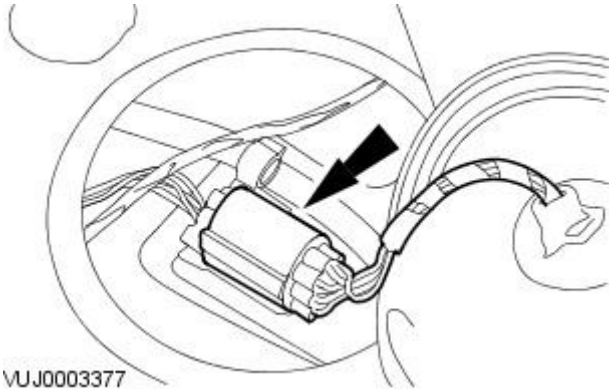
VUJ0003377

11. NOTE: Federal market vehicles only.

Using a suitable suction device drain the fuel tank filler pipe.

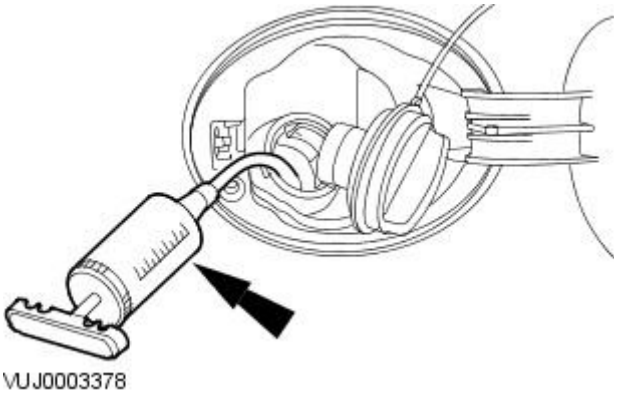
VUJ0003378

12. NOTE: Federal market vehicles only.

Remove the rear subframe.
For additional information, refer to: Rear Subframe (502-00 Uni-Body, Subframe and Mounting System, Removal and Installation).

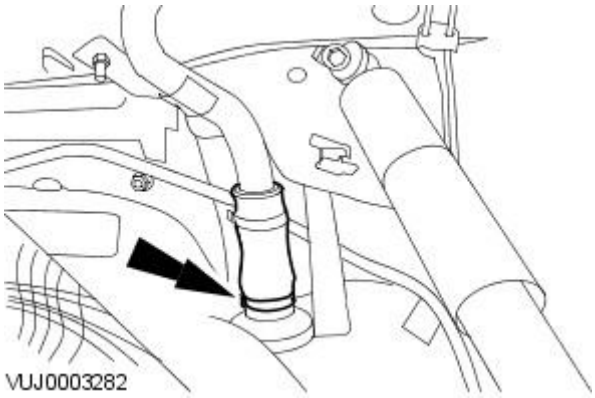

13. NOTE: Federal market vehicles only.

• NOTE: Note the orientation of the fuel tank filler pipe to fuel tank hose retaining clip before loosening.

Detach the fuel tank filler pipe hose from the fuel tank.

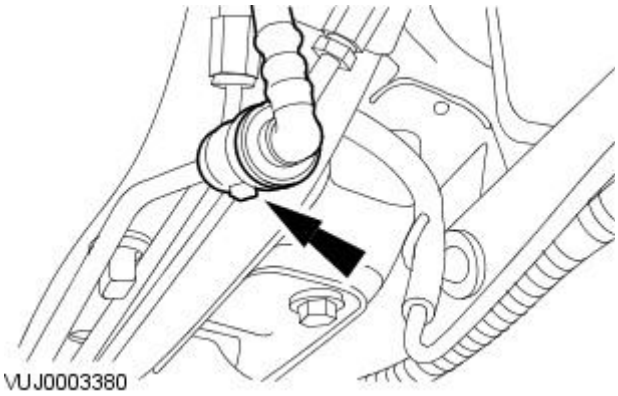

14. NOTE: Federal market vehicles only.

Disconnect the evaporative emission canister purge hose quick release coupling.
For additional information, refer to: Quick Release Coupling - Push Connect (310-00 Fuel System - General Information, General Procedures).

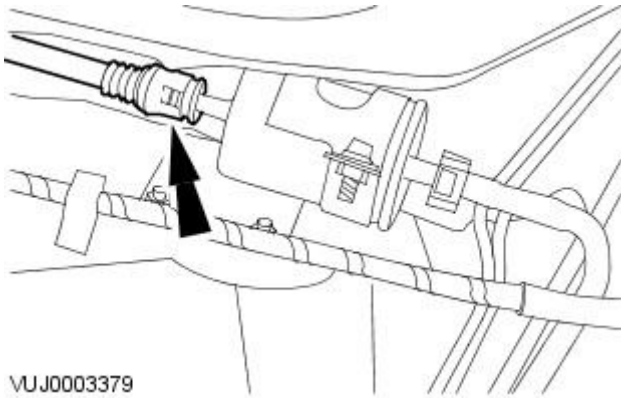

15. NOTE: Federal market vehicles only.

Disconnect the fuel filter line quick release coupling.
For additional information, refer to: Quick Release Coupling - Push Connect (310-00 Fuel System - General Information, General Procedures).

- Install blanking plugs to the male and female connectors.

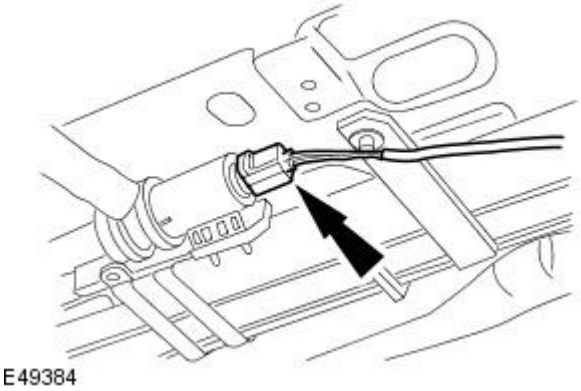

16. NOTE: Federal market vehicles only.

Disconnect the evaporative emission canister close valve electrical connector.

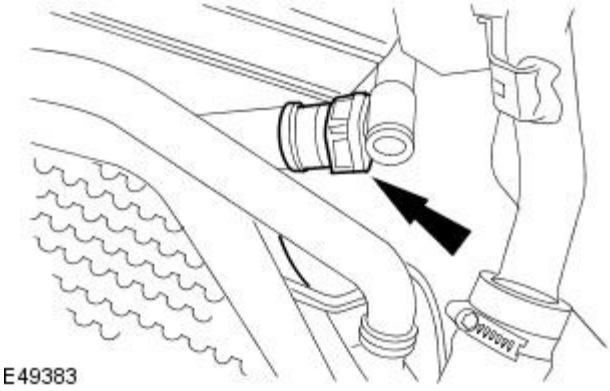

17. NOTE: Federal market vehicles only.

Disconnect the evaporative emission canister hose from the evaporative emission canister.

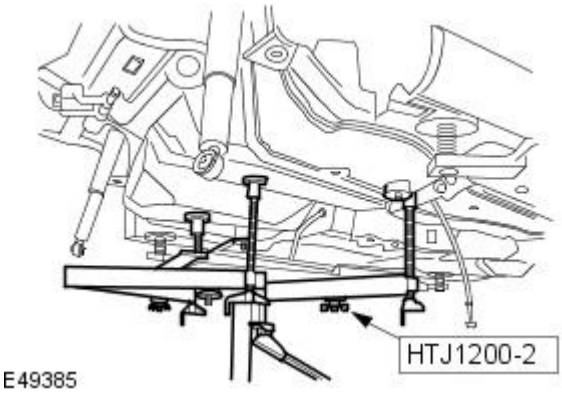

18. NOTE: Federal market vehicles only.

Using the special tool, support the fuel tank.

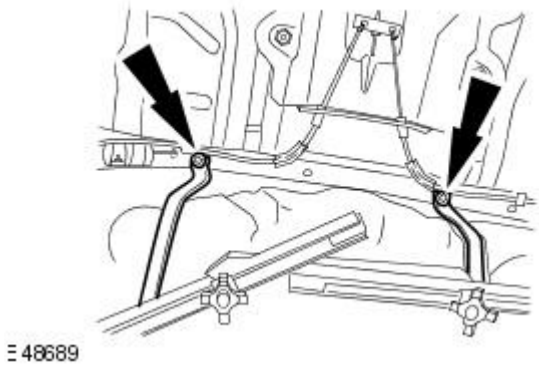

19. NOTE: Federal market vehicles only.

Remove the fuel tank support straps retaining bolts.

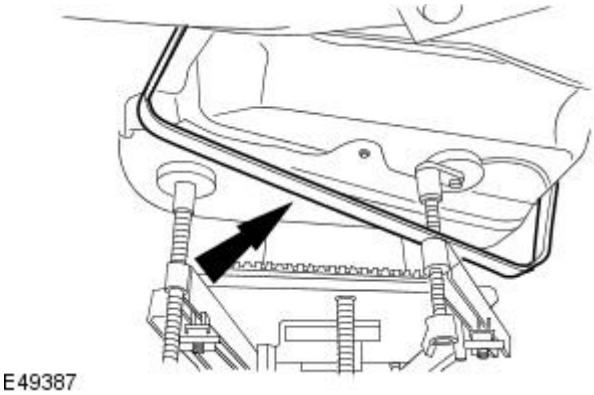

20. NOTE: Federal market vehicles only.

- NOTE: Right-hand shown, left-hand similar.

Remove the fuel tank support straps.

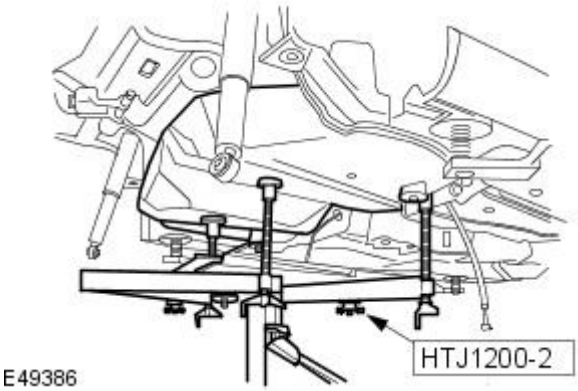

21. WARNING: The fuel tank cannot be drained in vehicle. Due to the heavy weight, make sure that the fuel tank is securely attached to the powertrain assembly jack when removing. Failure to follow this instruction may result in personal injury.

- NOTE: Federal market vehicles only.

Using the special tool, remove the fuel tank.

- Detach the fuel filler pipe hose from the fuel tank.
- Install blanking plugs to the fuel tank and fuel filler pipe hose.

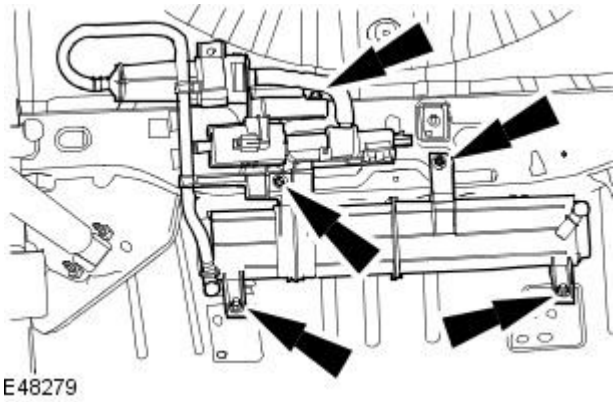

22. NOTE: Federal market vehicles only.

Remove the evaporative emission canister.

Installation

• WARNINGS:

Do not smoke or carry lighted tobacco or an open flame of any type when working on or near any fuel related components. Highly flammable vapors are always present and may ignite. Failure to follow these instructions may result in personal injury.

Do not carry or operate cellular phones when working on or near any fuel related components. Highly flammable vapors are always present and may ignite. Failure to follow these instructions may result in personal injury.

Due to the heavy weight, make sure that the fuel tank is securely attached to the powertrain assembly jack when installing.

This procedure involves fuel handling. Be prepared for fuel spillage at all times and always observe fuel handling precautions. Failure to follow these instructions may result in personal injury.

• NOTE: Non federal vehicles, refer to steps 1 to 3.

• NOTE: Federal vehicles, refer to steps 1 to 21.

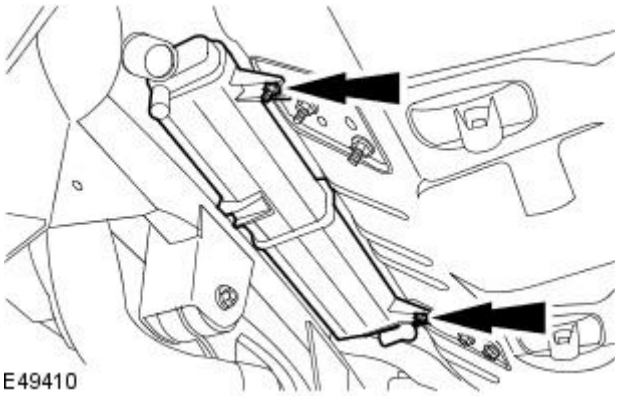

1. NOTE: Non federal market vehicles only.

Install the evaporative emission canister.

- Tighten to 5 Nm.

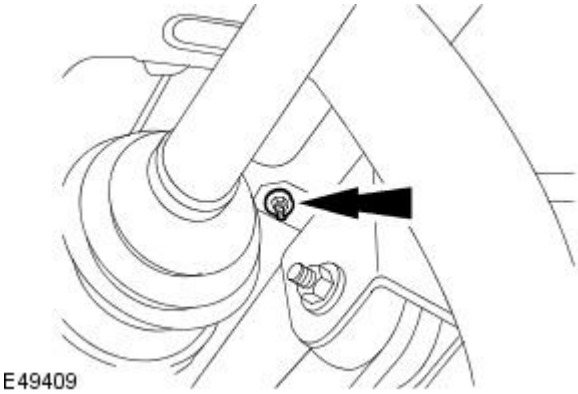

2. NOTE: Non federal market vehicles only.

Install the evaporative emission canister rear retaining nut.

- Tighten to 5 Nm.

3. NOTE: Non federal market vehicles only.

Install the fuel tank.
For additional information, refer to: Fuel Tank - 2.5L NA V6 - AJV6/3.0L NA V6 - AJ27 (310-01 Fuel Tank and Lines, Removal and Installation).

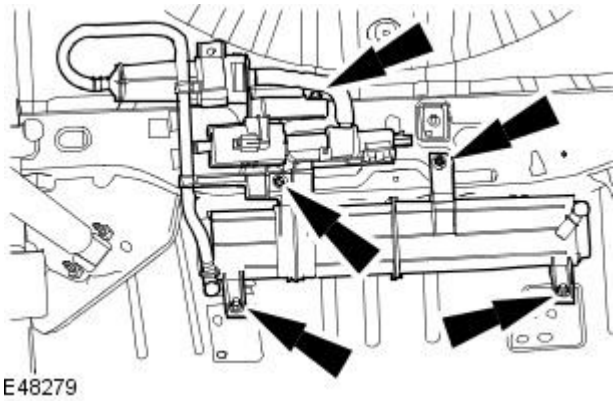

4. NOTE: Federal market vehicles only.

Install the evaporative emission canister.

- Tighten to 5 Nm.

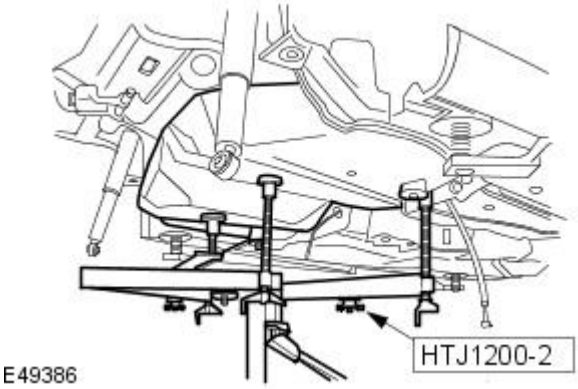

5. WARNING: The fuel tank cannot be drained in vehicle. Due to the heavy weight, make sure that the fuel tank is securely attached to the powertrain assembly jack when removing. Failure to follow this instruction may result in personal injury.

• NOTE: Federal market vehicles only.

• NOTE: Remove the blanking plugs from the fuel tank and fuel filler pipe hose.

Using the special tool, install the fuel tank.

- Attach the fuel filler pipe hose to the fuel tank.

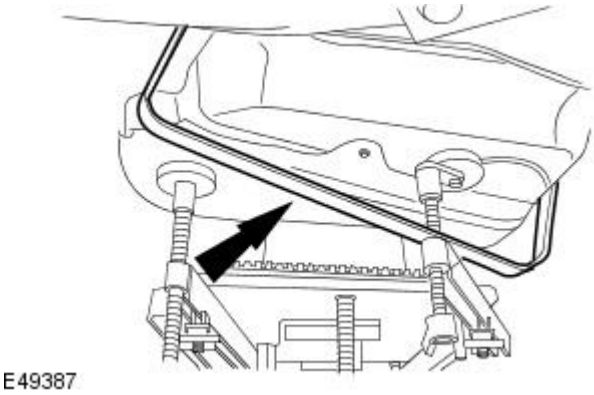

6. NOTE: Federal market vehicles only.

• NOTE: Right-hand shown, left-hand similar.

Install the fuel tank support straps.

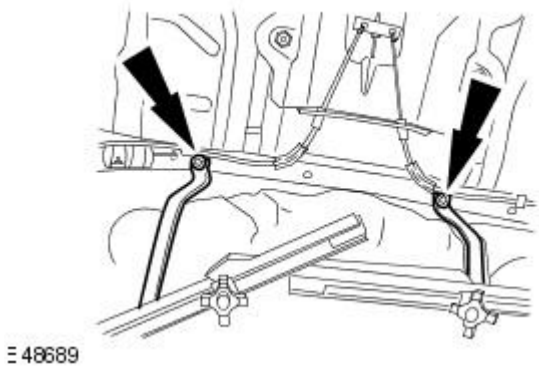

7. NOTE: Federal market vehicles only.

Install the fuel tank support straps retaining bolts.

- Tighten to 25 Nm.

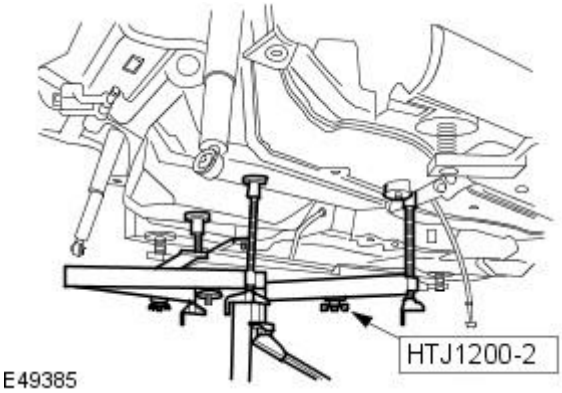

8. NOTE: Federal market vehicles only.

Remove the special tool.

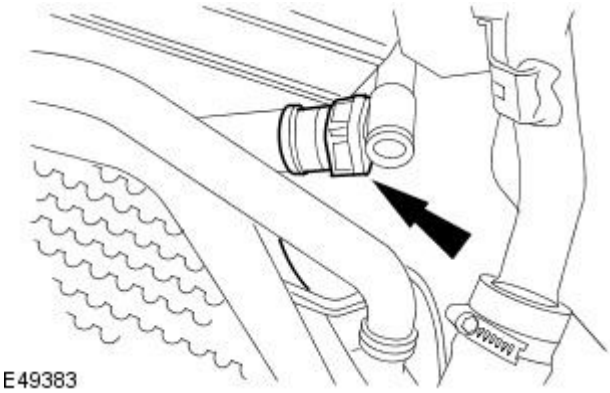

9. NOTE: Federal market vehicles only.

Connect the evaporative emission canister hose to the evaporative emission canister.

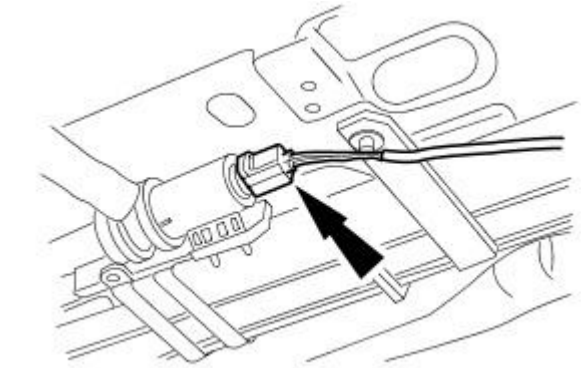

10. NOTE: Federal market vehicles only.

Connect the evaporative emission canister close valve electrical connector.

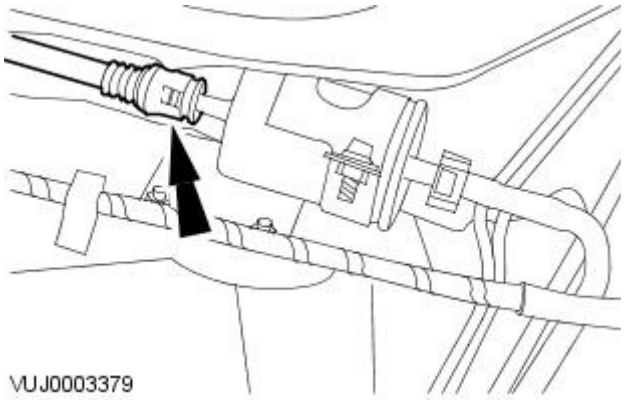

11. NOTE: Federal market vehicles only.

• NOTE: Remove the blanking plugs.

Connect the fuel filter line quick release coupling.
For additional information, refer to: Quick Release Coupling - Push Connect (310-00 Fuel System - General Information, General Procedures).

- Install blanking plugs to the male and female connectors.

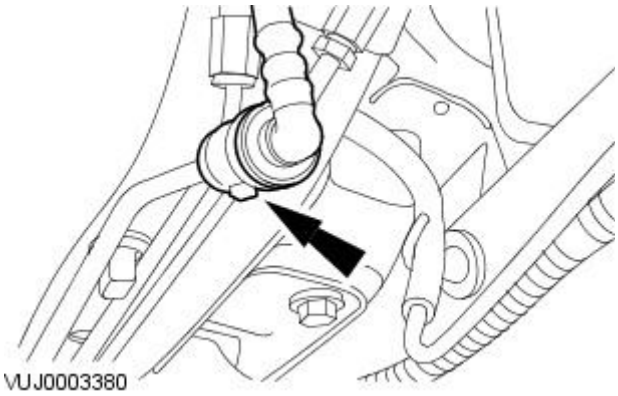

12. NOTE: Federal market vehicles only.

Connect the evaporative emission canister purge hose quick release coupling.
For additional information, refer to: Quick Release Coupling - Push Connect (310-00 Fuel System - General Information, General Procedures).

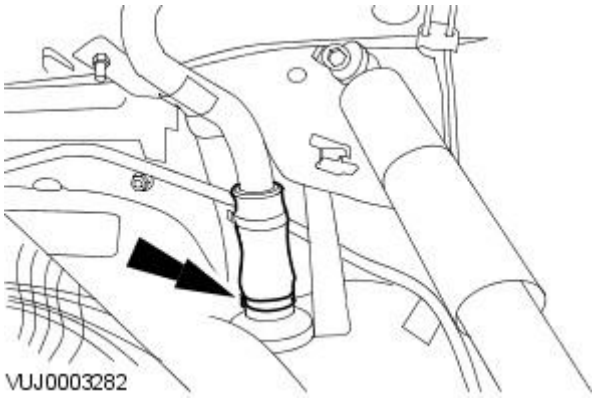

13. NOTE: Federal market vehicles only.

• NOTE: Make sure the fuel tank filler pipe to fuel tank hose retaining clip is correctly orientated.

Tighten the fuel tank filler pipe to fuel tank hose retaining clip.

- Tighten to 3 Nm.

14. NOTE: Federal market vehicles only.

Install the rear subframe.
For additional information, refer to: Rear Subframe (502-00 Uni-Body, Subframe and Mounting System, Removal and Installation).

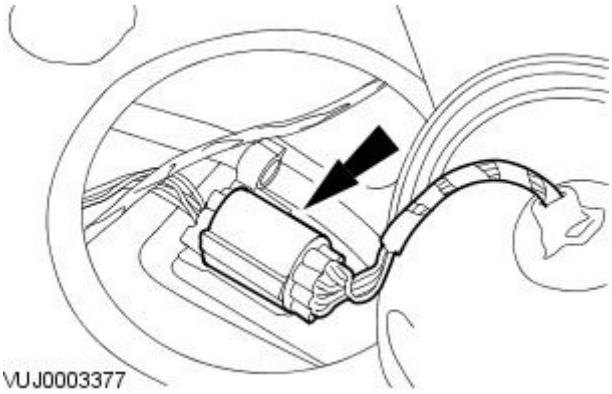

15. NOTE: Federal market vehicles only.

Connect the electrical connector.

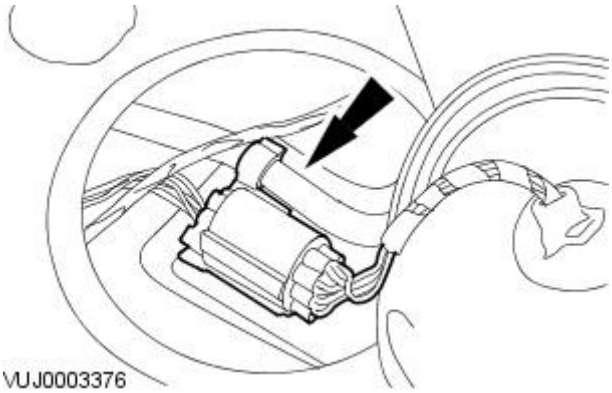

16. NOTE: Federal market vehicles only.

Attach the electrical connector.

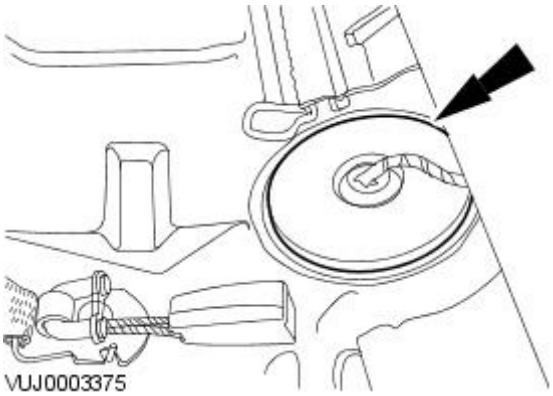

17. NOTE: Federal market vehicles only.

Attach the wiring harness grommet.

18. NOTE: Federal market vehicles only.

Install the rear seat cushion.
For additional information, refer to: Rear Seat Cushion (501-10 Seating, Removal and Installation).

19. NOTE: Federal market vehicles only.

Fill the fuel tank with the fuel drained from the fuel filler pipe.

20. NOTE: Federal market vehicles only.

Install the fuel filler cap.

21. NOTE: Federal market vehicles only.

Connect the battery ground cable.
For additional information, refer to: Battery Connect (414-01 Battery, Mounting and Cables, General Procedures).

Evaporative Emissions - Evaporative Emission Canister Purge Valve

Removal and Installation

Removal

Vehicles with 2.0L engine

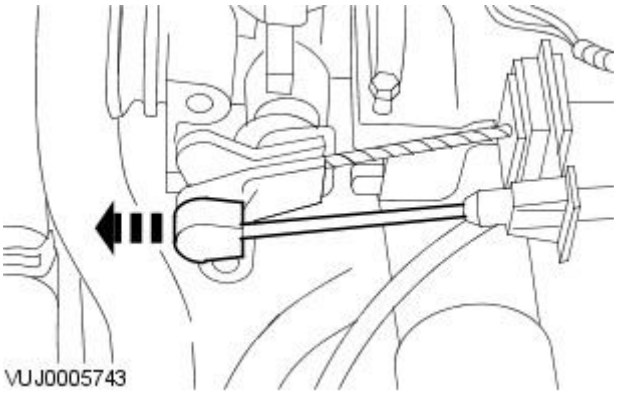

1. Detach the speed control cable.

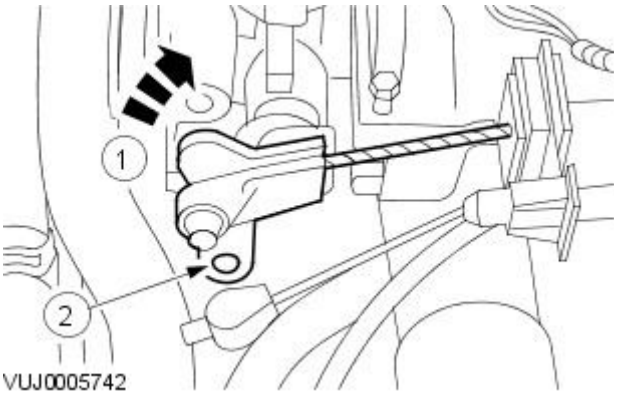

2. Detach the accelerator cable.

1. Reposition the accelerator lever to the fully open position.
2. Detach the accelerator cable.

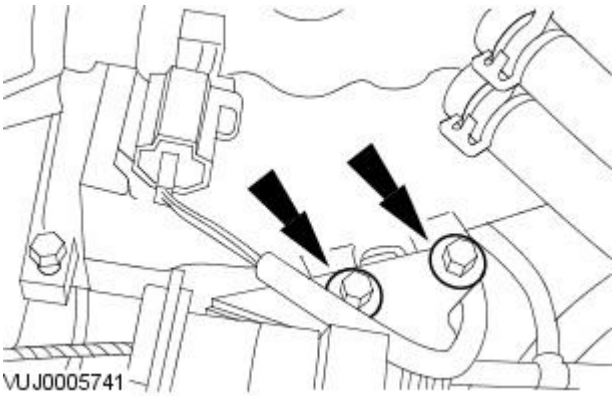

3. Detach the accelerator cable retaining bracket.

All vehicles

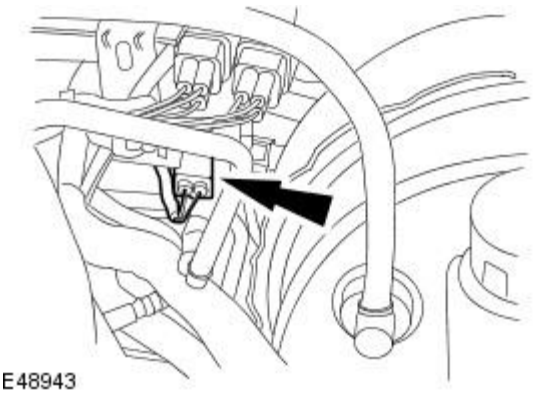

4. Disconnect the evaporative emission canister purge valve electrical connector.

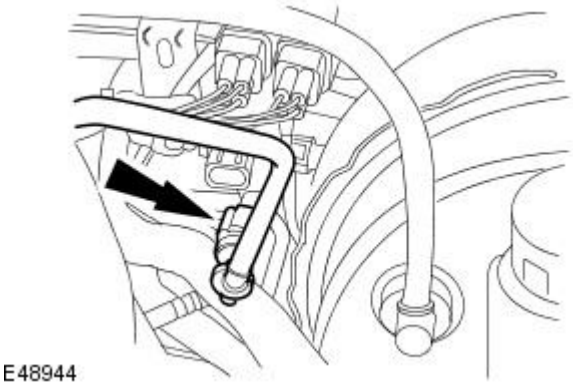

5. Disconnect the upper fuel vapour hose from the evaporative emission canister purge valve.

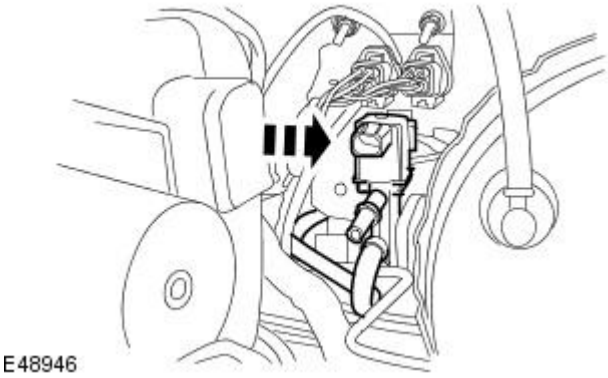

6. Detach the evaporative emission canister purge valve from the retaining bracket.

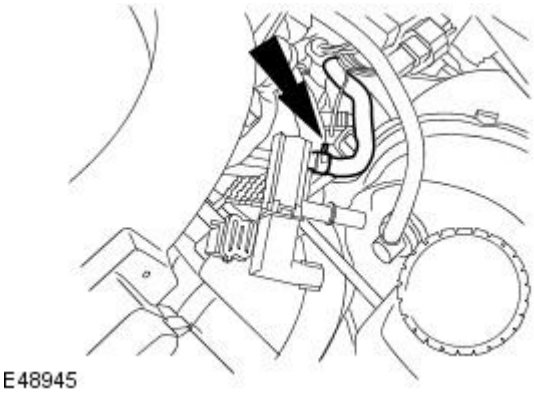

7. Remove the evaporative emission canister purge valve.

- Disconnect the lower fuel vapour hose from the evaporative emission canister purge valve.

Installation

All vehicles

1. To install, reverse the removal procedure.

Vehicles with 2.0L engine

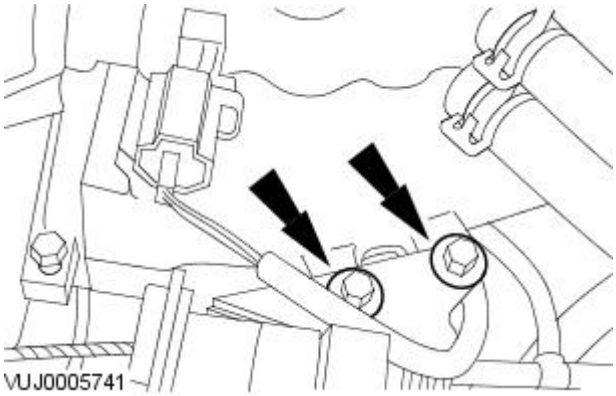

2. Tighten to 9 Nm.

Electronic Engine Controls - 2.0L NA V6 - AJV6 / 2.5L NA V6 - AJV6 / 3.0L NA V6 - AJ27 -

Torque Specifications

Description	Nm	lb-ft	lb-in
Camshaft position sensor retaining bolt	7	-	62
Heated oxygen sensor	40	30	-
Catalyst monitor sensor	40	30	-
Crankshaft position sensor retaining bolt	10	7	-
Knock sensor retaining bolt	25	18	-
Variable camshaft timing oil control solenoid retaining bolt	10	7	-
Oil temperature sensor	15	11	-
Engine control module (ECM) retaining nut	10	7	-
ECM electrical connector retaining bolt	10	7	-
Engine block coolant inlet pipe retaining bolts	25	18	-
Water pump coolant outlet pipe retaining bolts	10	7	-
Throttle position sensor retaining screws	7	-	62

Published: 11-May-2011

Electronic Engine Controls - 2.0L NA V6 - AJV6 / 2.5L NA V6 - AJV6 / 3.0L NA V6 - AJ27 - Electronic Engine Controls

Description and Operation

2.0L Engine

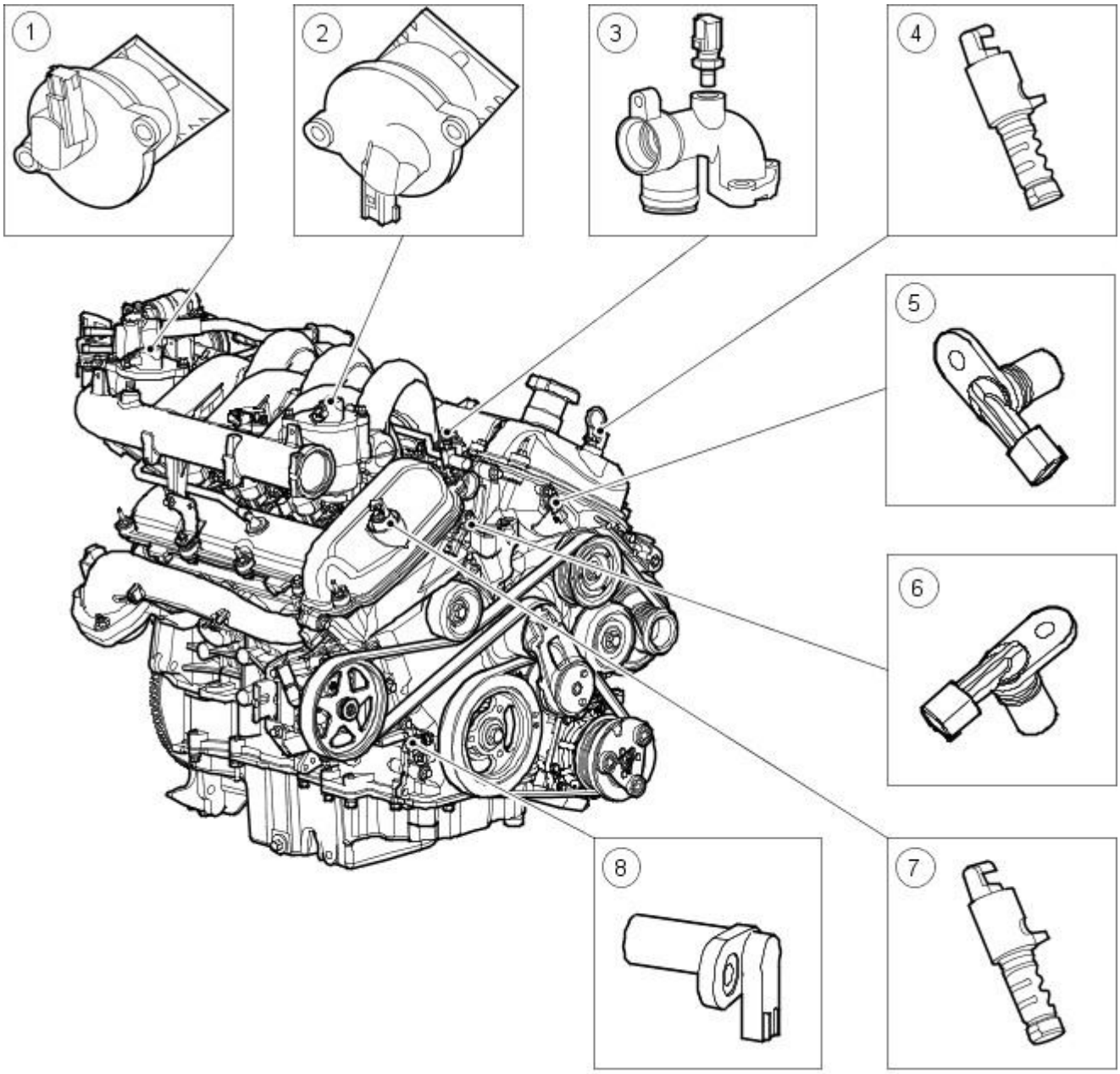

E30812

Item	Part Number	Description
1	—	Intake Manifold Tuning (IMT) Valve - upper
2	—	Intake Manifold Tuning (IMT) Valve - lower
3	—	Engine Coolant Temperature (ECT) Sensor
4	—	Variable Camshaft Timing Oil Control Solenoid LH
5	—	Camshaft Position (CMP) Sensor LH
6	—	Camshaft Position (CMP) Sensor RH
7	—	Variable Camshaft Timing Oil Control Solenoid RH
8	—	Crankshaft Position (CKP) Sensor

2.5L and 3.0L Engine

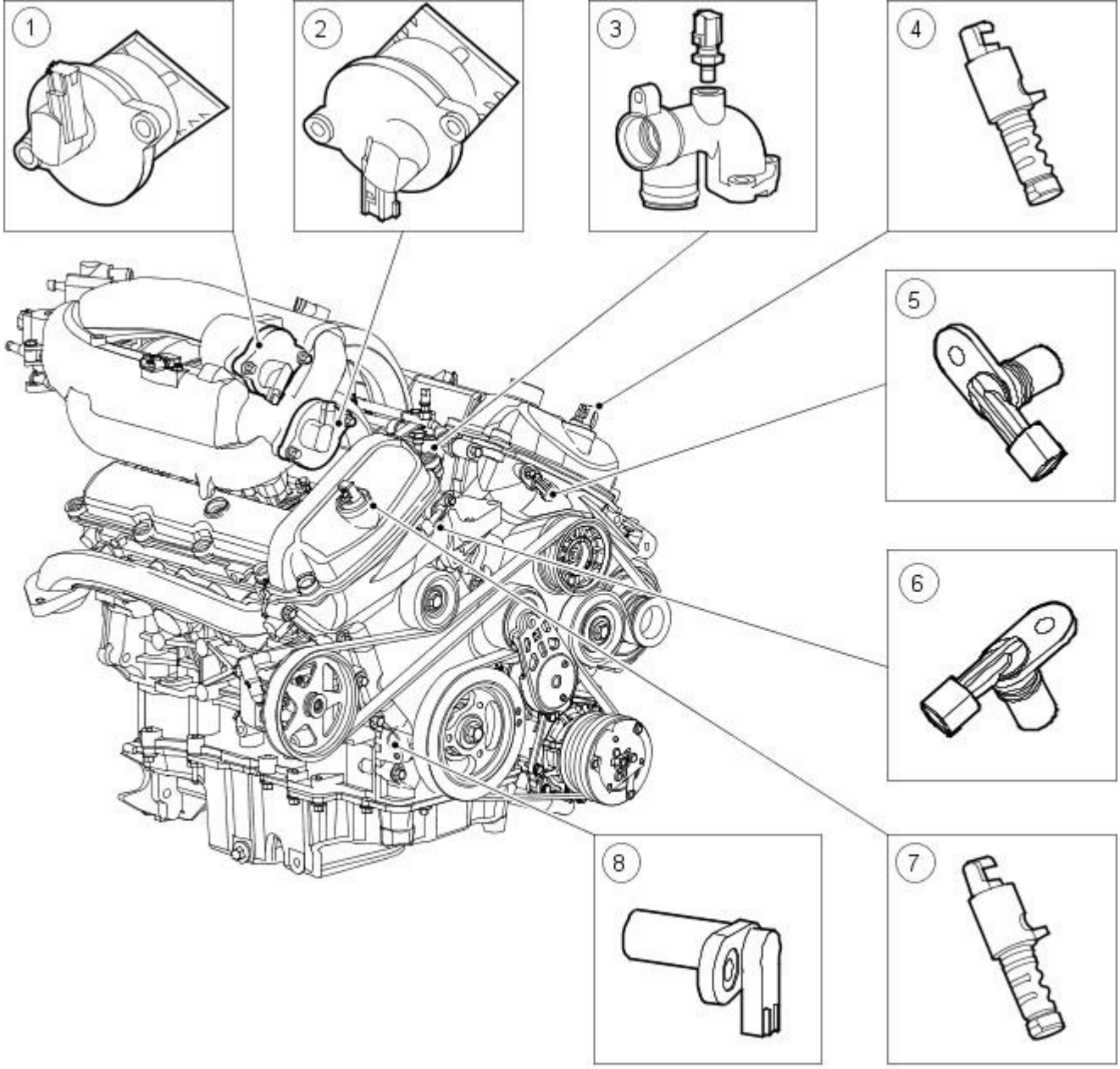

VUJ0004252

Item	Part Number	Description
1	—	Intake Manifold Tuning (IMT) Valve - upper
2	—	Intake Manifold Tuning (IMT) Valve - lower
3	—	Engine Coolant Temperature (ECT) Sensor
4	—	Variable Camshaft Timing Oil Control Solenoid LH
5	—	Camshaft Position (CMP) Sensor LH
6	—	Camshaft Position (CMP) Sensor RH
7	—	Variable Camshaft Timing Oil Control Solenoid RH
8	—	Crankshaft Position (CKP) Sensor

2.0L, 2.5L and 3.0L Engine

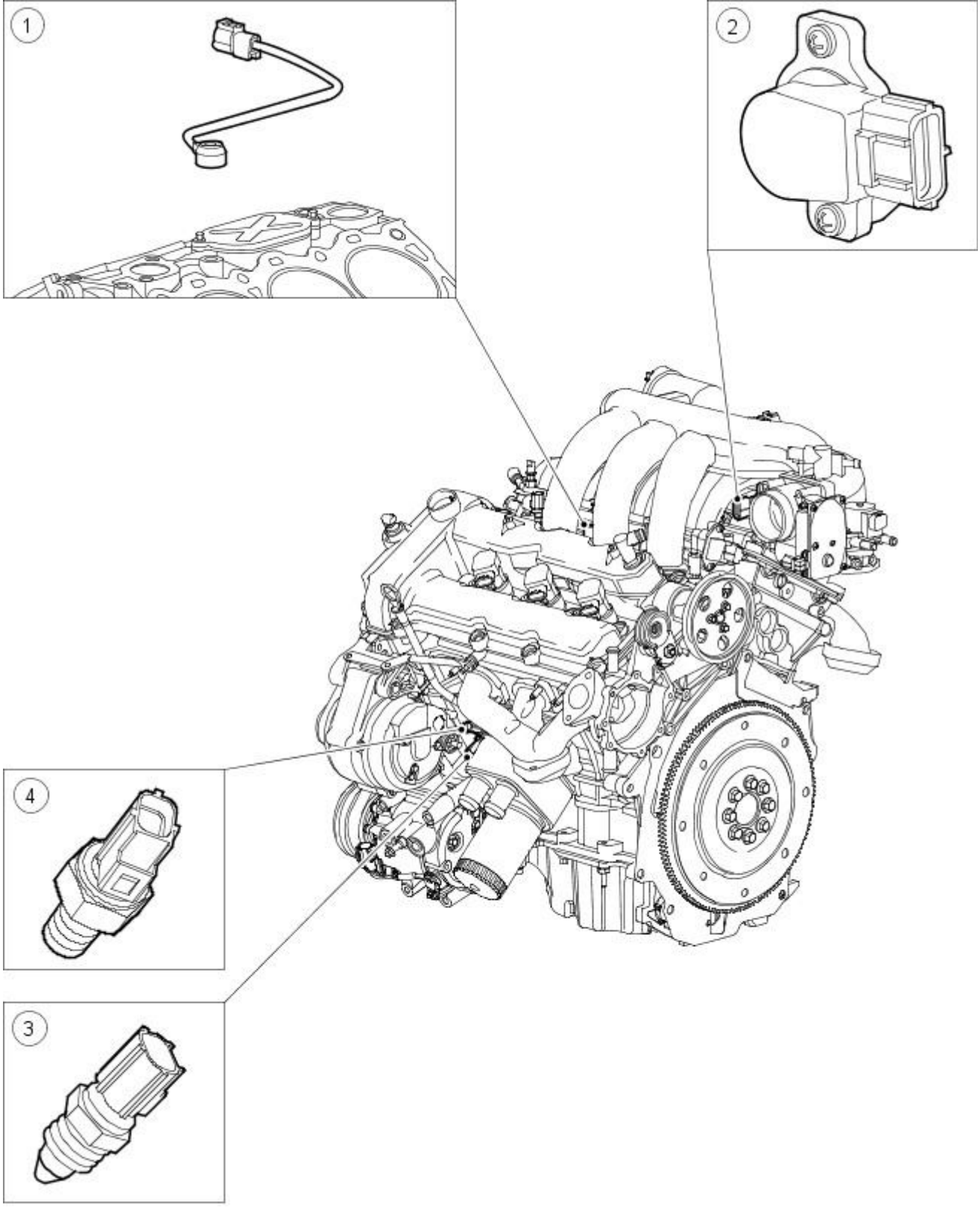

VUJ0004253

Item	Part Number	Description
1	—	Knock Sensor (KS)
2	—	Throttle Position (TP) Sensor
3	—	Oil Temperature Sensor
4	—	Oil Pressure Switch

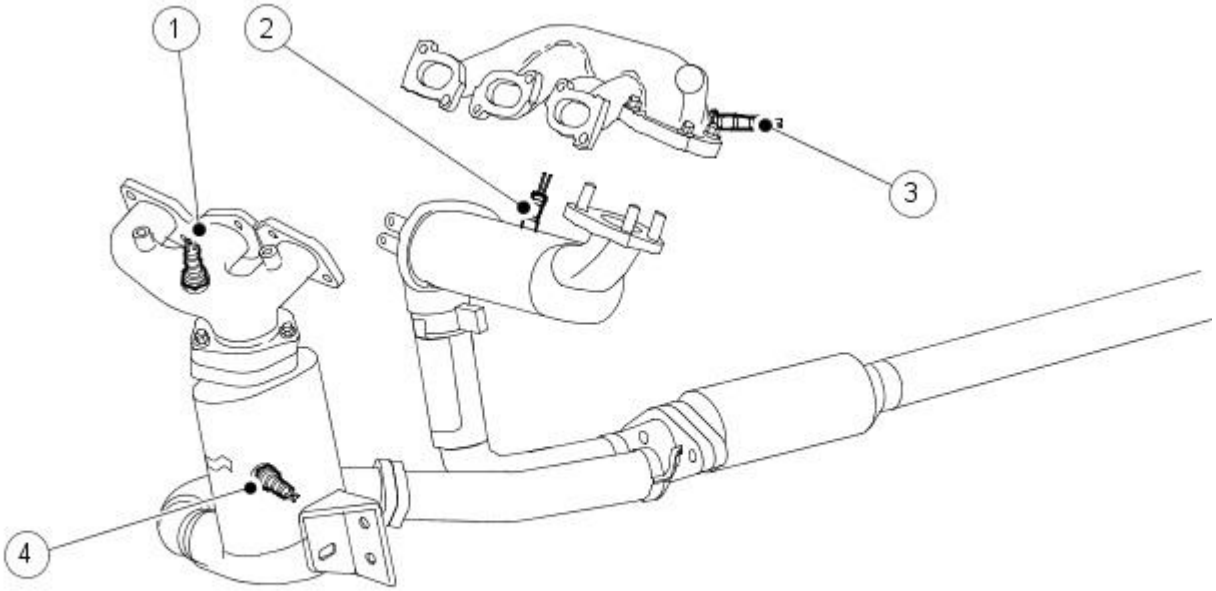

VUJ0004254

Item	Part Number	Description
1	—	Heated Oxygen Sensor (HO2S) LH
2	—	Catalyst Monitor Sensor RH
3	—	Heated Oxygen Sensor (HO2S) RH
4	—	Catalyst Monitor Sensor LH

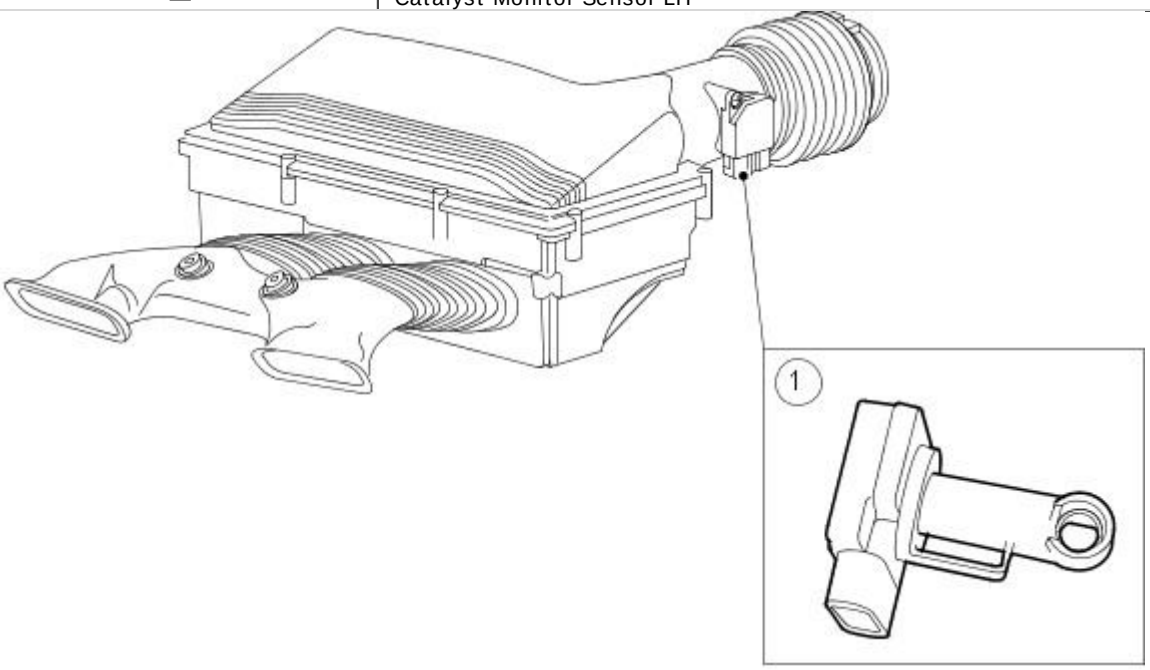

VUJ0004255

Item	Part Number	Description
1	—	Mass Air flow (MAF) Sensor

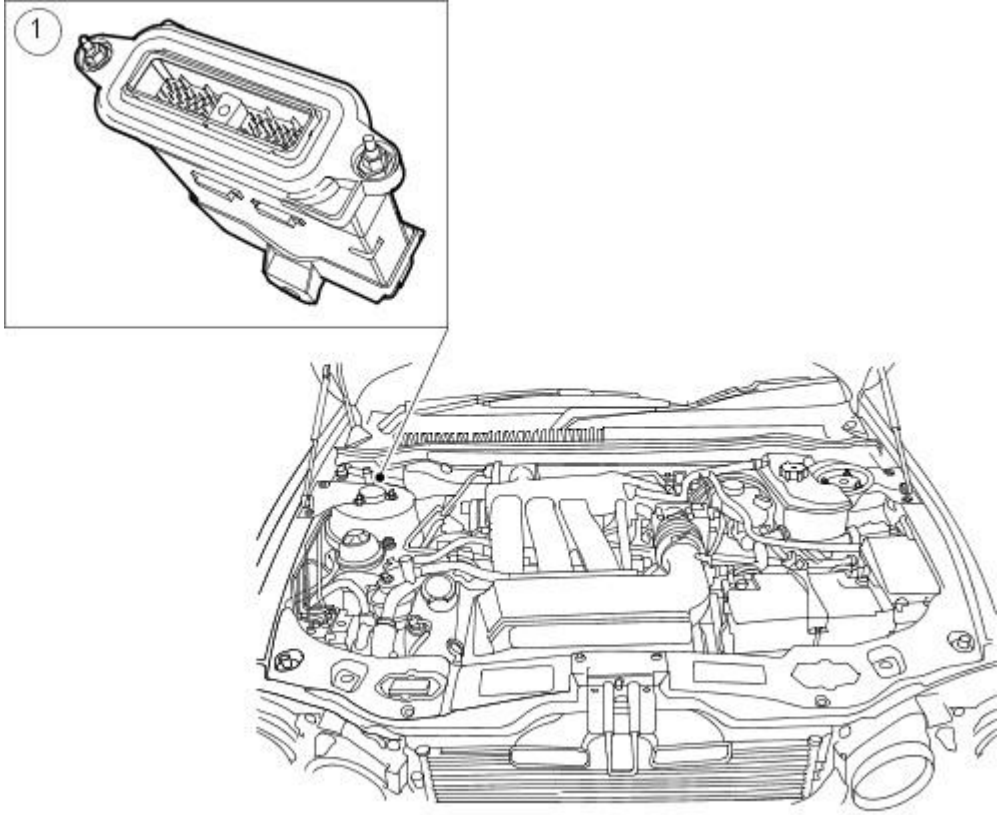

VUJ0004256

Item	Part Number	Description
1	—	Engine Control Module (ECM)

Engine Control Module (ECM)

The electronic engine control system consists of a engine control module (ECM) and a number of sensing and actuating devices. The sensors supply the ECM with input signals which relate to the engine operating conditions and driver requirements. The sensor information is evaluated by the ECM using the results to activate the appropriate response from the actuating devices. The system provides the necessary engine control accuracy and adaptability to:

- Minimize exhaust emissions and fuel consumption.
- Provide optimum driver control under all conditions.
- Minimize evaporative emissions.
- Provide system diagnostics.

In addition to these functions the ECM also interfaces with other vehicle systems through the controller area network (CAN).

Camshaft Position (CMP) Sensor

The camshaft position (CMP) sensors monitor the position of both camshafts to allow the ECM to control the phase of the inlet camshafts relative to the position of the crankshaft.

Variable Camshaft Timing Oil Control Solenoid

The variable camshaft timing oil control solenoid is a hydraulic actuator, which advances and retards the inlet camshaft timing, thereby altering the camshaft to crankshaft phasing for optimum engine performance.

Intake Manifold Tuning (IMT) Valve

There are two intake manifold tuning (IMT) valves, an upper and a lower, sometimes referred to as number one and two respectively. They are a two position (open and close) device used to create a variable air intake system. The IMT valve positions are switched by signals from the ECM to optimize torque across the engine's speed and load range. The IMT valves work in conjunction with the throttle body. The upper IMT valve opens between 3,000 and 6,000 rpm while the lower IMT valve opens between 5,000 and 6,000 rpm.

Knock Sensor (KS)

The knock sensor (KS) detects combustion knock within the engine cylinders and sends a signal to the ECM. The ECM uses this information to gradually adjust the ignition timing until the combustion knock is eliminated.

Mass Air flow (MAF) Sensor

The mass air flow (MAF) sensor informs the ECM of the rate of air flow entering the engine by producing a voltage which is proportional to the rate of air flow into the engine. The voltage produced by the MAF sensor increases as the rate of air flow increases. The MAF sensor also takes into account the density of the air entering the air intake system so that it is possible to maintain the required air to fuel ratio, and to compensate for variations in atmospheric pressure.

Integral to the MAF sensor is the intake air temperature sensor (IAT) which measures the temperature of the air entering the air intake system. The ECM uses this information to compensate for higher than normal air intake temperatures.

Throttle Position (TP) Sensor

The ECM monitors the angle of the throttle plate within the throttle housing through the throttle position (TP) sensor. The TP sends a voltage to the ECM which is proportional to the angle of the throttle plate. The voltage from the TP increases with the angle of the throttle plate. There are two sensor tracks within the TP sensor.

Crankshaft Position (CKP) Sensor

The crankshaft position (CKP) sensor is an inductive pulse generator, which scans protrusions on a pulse ring fitted to the front of the crankshaft to inform the ECM of the crankshaft's position and speed. The CKP sensor produces an alternating voltage which is increases with

engine speed.

Engine Coolant Temperature (ECT) Sensor

The engine coolant temperature (ECT) sensor is a thermistor type sensor that provides an input signal to the ECM which is proportional to the engine coolant temperature. The ECT sensor is a negative temperature coefficient (NTC) sensor and its resistance decreases with a proportional increase in engine coolant temperature.

Oil Temperature Sensor

The oil temperature sensor is a thermistor type sensor that provides an input signal to the ECM which is proportional to the engine oil temperature.

Oil Pressure Switch

The oil pressure switch is connected to the instrument cluster and is not directly part of the electronic engine control system.

Heated Oxygen Sensor (HO2S)

The heated oxygen sensor (HO2S) is a linear characteristic type sensor, fitted forward of the exhaust system's catalytic converter. The ECM uses this as it's primary sensor to measure the oxygen content of the exhaust gasses within the exhaust system to provide closed-loop fuelling control.

Catalyst Monitor Sensor

The catalyst monitor sensor is a non-linear characteristic type sensor fitted to the exhaust system's catalytic converter. The ECM uses this as it's secondary sensor to measure the oxygen content of the exhaust gasses within the exhaust after they have passed through the catalytic converter. As well as providing additional closed-loop fuelling control the ECM uses this information to determine the efficiency of the catalytic converter.

Electronic Engine Controls - 2.0L NA V6 - AJV6 / 2.5L NA V6 - AJV6 / 3.0L NA V6 - AJ27 - Electronic Engine Controls2.0L NA V6 - AJV6

Diagnosis and Testing

Principle of Operation

For a detailed description of the engine control system, refer to the relevant Description and Operation sections in the workshop manual. REFER to: Electronic Engine Controls (303-14A Electronic Engine Controls - 2.0L NA V6 - AJV6/2.5L NA V6 - AJV6/3.0L NA V6 - AJ27, Description and Operation).

Inspection and Verification

1. **1.** Verify the customer concern.
2. **2.** Visually inspect for obvious signs of mechanical or electrical damage.

Visual Inspection Chart

Mechanical	Electrical
• Engine oil level • Cooling system • Fuel charging system • Fuel contamination • Throttle body • Air intake system • Exhaust system	• Vehicle battery (fully charged and correctly connected) • Fuses. (9, 31, 32, 37) • Wiring harness • Electrical connector(s) • Sensor(s) • Engine control module (ECM)

3. **3.** If an obvious cause for an observed or reported concern is found, correct the cause (if possible) before proceeding to the next step.
4. **4.** If the cause is not visually evident, check for Diagnostic Trouble Codes (DTCs) and refer to the DTC Index.

DTC Index

CAUTION: When probing connectors to take measurements in the course of the pinpoint tests, use the adaptor kit, part number 3548-1358-00

• NOTE: If the control module/component is suspect and the vehicle remains under manufacturer warranty, refer to the Warranty Policy and Procedures manual (section B1.2), or determine if any prior approval program is in operation, prior to the installation of a new module/component.

• NOTE: When performing voltage or resistance tests, always use a digital multimeter (DMM) accurate to three decimal places and with a current calibration certificate. When testing resistance, always take the resistance of the DMM leads into account.

• NOTE: Check and rectify basic faults before beginning diagnostic routines that involve pinpoint tests.

• NOTE: Inspect connectors for signs of water ingress, and pins for damage and/or corrosion.

• NOTE: If DTCs are recorded and, after performing the pinpoint tests, a fault is not present, an intermittent concern may be the cause. Always check for loose connections and corroded terminals.

DTC	Description	Possible Cause	Action
P0420	Catalyst System Efficiency Below Threshold (Bank 1)	• bank 1 upstream HO2 sensor (heater) failure • bank 1 downstream HO2 sensor (heater) failure • bank 1 upstream HO2 sensor (sensing) failure • bank 1 downstream HO2 sensor (sensing) failure • upstream sensor to ECM wiring fault • downstream sensor to ECM wiring fault • Exhaust system fault • Catalyst conversion failure	Refer to pinpoint tests for components listed. Visually inspect catalytic converters.
P0430	Catalyst System Efficiency Below Threshold (Bank 2)	• bank 2 upstream HO2 sensor (heater) failure • bank 2 downstream HO2 sensor (heater) failure • bank 2 downstream HO2 sensor (sensing) failure • upstream sensor to ECM wiring fault • downstream sensor to ECM wiring fault • Exhaust system fault	Refer to pinpoint tests for components listed. Visually inspect catalytic converters.

DTC	Description	Possible Cause	Action
		• Catalyst conversion failure	
P0300	Random Misfire Detected	• Ignition system components • Ignition system wiring harness	Check all ignition coils for secure fixing and check wiring harness connector for damage and correct engagement. Visually confirm condition and grade of all sparking plugs. Check the crank position sensor is correctly mounted and secure. Refer to the appropriate circuit diagram, check the crank position sensor cable screening is intact between the sensor and the engine control module and connected to ground. Check the security and connection of the ignition relay located in the front power distribution box. Check ignition relay ground line for intermittent open circuits between front power distribution box and its ground point. Check the wiring harness between the ignition relay to the harness splice where the feeds separate to each ignition module for shorts to ground or intermittent open circuits. Refer to the appropriate wiring diagram. Inspect ignition system capacitor for damage or short circuits. Check capacitor wiring back to harness splice for open circuits or short to power.
P0301	Cylinder 1 Misfire Detected	• Ignition system cylinder 1 • Ignition system wiring harness	Check cylinder 1 ignition coil for secure fixing and check wiring harness connector for damage and correct engagement. Visually confirm condition and grade of spark plug. Install a new sparkplug of the correct grade if required. Refer to appropriate wiring diagram: check power supply line for open circuits or shorts to ground, check line to ignition coil from ignition relay in front power distribution box. Check ground connection between ignition coil and ground point for open circuits. Check ignition line from engine control module to ignition coil for open circuits, short to power, short to ground. Check feedback line from ignition coil to engine control module for open circuits or short to ground/power. Minimum supply voltage at coil is 10.5 volts. maximum resistance in signal lines is 5 ohms. Repair wiring using appropriate repair kit as required. Minimum supply voltage at coil is 10.5 volts. maximum resistance in signal lines is 5 ohms. Repair wiring using appropriate repair kit as required. If there are no wiring faults, swap suspect ignition coil to a different cylinder, clear DTCs. retest vehicle. If the misfire changes cylinder replace the ignition coil.
P0303	Cylinder 3 Misfire Detected	• Ignition system cylinder 3 • Ignition system wiring harness	Check cylinder 3 ignition coil for secure fixing and check wiring harness connector for damage and correct engagement. Visually confirm condition and grade of spark plug. Install a new sparkplug of the correct grade if required. Refer to appropriate wiring diagram: check power supply line for open circuits or shorts to ground, check line to ignition coil from ignition relay in front power distribution box. Check ground connection between ignition coil and ground point for open circuits. Check ignition line from engine control module to ignition coil for open circuits, short to power, short to ground. Check feedback line from ignition coil to engine control module for open circuits or short to ground/power. Minimum supply voltage at coil is 10.5 volts. maximum resistance in signal lines is 5 ohms. Repair wiring using appropriate repair kit as required. If there are no wiring faults, swap suspect ignition coil to a different cylinder, clear DTCs. retest vehicle. If the misfire changes cylinder replace the ignition coil.
P0305	Cylinder 5 Misfire Detected	• Ignition system cylinder 5 • Ignition system wiring harness	Check cylinder 5 ignition coil for secure fixing and check wiring harness connector for damage and correct engagement. Visually confirm condition and grade of spark plug. Install a new sparkplug of the correct grade if required. Refer to appropriate wiring diagram: check power supply line for open circuits or shorts to ground, check line to ignition coil from ignition relay in front power distribution box. Check ground connection between ignition coil and ground point for open circuits. Check ignition line from engine control module to ignition coil for open circuits, short to power, short to ground. Check feedback line from ignition coil to engine control module for open circuits or short to ground/power. Minimum supply voltage at coil is 10.5 volts. maximum resistance in signal lines is 5 ohms. Repair wiring using appropriate repair kit as required. If there are no wiring faults, swap suspect ignition coil to a different cylinder, clear DTCs. retest vehicle. If the misfire changes cylinder replace the ignition coil.
P0302	Cylinder 2 Misfire Detected	• Ignition system cylinder 2 • Ignition system wiring harness	Check cylinder 2 ignition coil for secure fixing and check wiring harness connector for damage and correct engagement. Visually confirm condition and grade of spark plug. Install a new sparkplug of the correct grade if required. Refer to appropriate wiring diagram: check power supply line for open circuits or shorts to ground, check line to ignition coil from ignition relay in front power distribution box. Check ground connection between ignition coil and ground point for open circuits. Check ignition line from engine control module to ignition coil for open circuits, short to power, short to ground. Check feedback line from ignition coil to engine control module for open circuits or short to ground/power. Minimum supply voltage at coil is 10.5 volts. maximum resistance in signal lines is 5 ohms. Repair wiring using appropriate repair kit as required. If there are no wiring faults, swap suspect ignition coil to a different cylinder, clear DTCs. retest vehicle. If the misfire changes cylinder replace the ignition coil.
P0304	Cylinder 4 Misfire Detected	• Ignition system cylinder 4 • Ignition system wiring harness	Check cylinder 4 ignition coil for secure fixing and check wiring harness connector for damage and correct engagement. Visually confirm condition and grade of spark plug. Install a new sparkplug of the correct grade if required. Refer to appropriate wiring diagram: check power supply line for open circuits or shorts to ground, check line to ignition coil from ignition relay in front power distribution box. Check ground connection between ignition coil and ground point for open circuits. Check ignition line from engine control module to ignition coil for open circuits, short to power, short to ground. Check feedback line from ignition coil to engine control module for open circuits or short to ground/power. Minimum supply voltage at coil is 10.5 volts. maximum resistance in signal lines is 5 ohms. Repair wiring using appropriate repair kit as required. If there are no wiring faults, swap suspect ignition coil to a different cylinder, clear DTCs. retest vehicle. If the misfire changes cylinder replace the ignition coil.
P0306	Cylinder 6 Misfire Detected	• Ignition system cylinder 6 • Ignition system wiring harness	Check cylinder 6 ignition coil for secure fixing and check wiring harness connector for damage and correct engagement. Visually confirm condition and grade of spark plug. Install a new sparkplug of the correct grade if required. Refer to appropriate wiring diagram: check power supply line for open circuits or shorts to ground, check line to ignition coil from ignition relay in front power distribution box. Check ground connection between ignition coil and ground point for open circuits. Check ignition line from engine control module to ignition coil for open circuits, short to power, short to ground. Check feedback line from ignition coil to

DTC	Description	Possible Cause	Action
			engine control module for open circuits or short to ground/power. Minimum supply voltage at coil is 10.5 volts. maximum resistance in signal lines is 5 ohms. Repair wiring using appropriate repair kit as required. If there are no wiring faults, swap suspect ignition coil to a different cylinder, clear DTCs. retest vehicle. If the misfire changes cylinder replace the ignition coil.
P1313	Misfire Rate Catalyst Damage Fault - Bank 1	• Concern with ignition system and wiring harness on bank 1	Refer to the appropriate wiring diagram. Check ignition circuits on bank one for damage to insulation. Check ignition coil power supply, ground and signal circuits for open circuits, shorts to ground or power, high resistance. Repair any wiring defects using appropriate methods and materials. Clear DTC and retest the system to check for normal operation.
P1314	Misfire Rate Catalyst Damage Fault - Bank 2	• Concern with ignition system and wiring harness on bank 2	Refer to the appropriate wiring diagram. Check ignition circuits on bank two for damage to insulation. Check ignition coil power supply, ground and signal circuits for open circuits, shorts to ground or power, high resistance. Repair any wiring defects using appropriate methods and materials. Clear DTC and retest the system to check for normal operation.
P1316	Injector Driver Module Codes Detected	• Ignition system • Ignition system harness	Refer to repair manual, check ignition system components. Inspect ignition system harness for evidence of damage. Check power supply to ignition coils, check EMS control lines. Repair wiring faults using appropriate materials and methods. Clear DTC and retest system to confirm correct operation.
P0131	O2 Circuit Low Voltage (Bank 1, Sensor 1)	• Concern with upstream O2 sensor • Wiring between upstream O2 sensor and ECM	Refer to the appropriate wiring diagram: check the wiring harness connections between the engine control module and upstream oxygen sensor. Check sensor signal circuits for short to ground or high resistance.
P0132	O2 Circuit High Voltage (Bank 1, Sensor 1)	• Concern with upstream O2 sensor • Wiring between upstream O2 sensor and ECM	Refer to the appropriate wiring diagram: check the wiring harness connections between the engine control module and upstream oxygen sensor.
P0133	O2 Circuit Slow Response (Bank 1, Sensor 1)	• Exhaust leak/damage • Concern with upstream O2 sensor • Upstream O2 sensor not achieving normal operating temperature • Wiring between upstream O2 sensor and ECM • Fuel injector flow partially blocked • Catalyst efficiency decrease	Inspect exhaust system for damage and evidence of leakage. replace any defective components. Clear the DTCs and retest the system. Check fuse for power supply to O2 sensor heater. Install a replacement fuse and inspect wiring for short circuits if defective. Clear the DTCs and retest the system. Check power supply line from front power distribution box to O2 sensor heater for open circuits and high resistance. Repair defects using appropriate harness repair kit. Clear the DTCs and retest the system. Check ground circuit from O2 sensor heater to engine control module connector for open circuits. Repair defects using appropriate wiring repair kit. Clear the DTCs and retest the system. Disconnect oxygen sensor connector and measure the continuity though the heating circuit of the sensor. If there is no continuity, replace the sensor. Clear the DTCs and retest the system
P0031	HO2S Heater Control Circuit Low (Bank 1, Sensor 1)	• Concern with upstream O2 sensor heater • Wiring fault between upstream O2 sensor and ECM • Wiring fault between Upstream O2 sensor and Front Power Distribution Box	Inspect wiring harness from O2 sensor for damage. Replace or repair any damaged components. clear DTCs and retest vehicle. Check voltage supply from front power distribution box to O2 sensor heater circuit. If less than 10.5 volts check and repair
P0032	HO2S Heater Control Circuit High (Bank 1, Sensor 1)	• Concern with upstream O2 sensor heater • Wiring fault between upstream O2 sensor and ECM • Wiring fault between Upstream O2 sensor and Front Power Distribution Box	Check wiring between oxygen sensor and engine control module for obvious defects. Refer to the appropriate circuit diagram and check the ground connection from the heater circuit for open circuits or high resistance. Repair circuits, clear DTC, retest systems.
P0152	O2 Circuit High Voltage (Bank 2, Sensor 1)	• Concern with upstream O2 sensor heater • Wiring fault between upstream O2 sensor and ECM • Wiring fault between Upstream O2 sensor and Front Power Distribution Box	Check wiring between oxygen sensor and engine control module for obvious defects. Refer to the appropriate circuit diagram and check the signal lines for short to power. Repair circuits, clear DTC, retest systems.
P0153	O2 Circuit Slow Response (Bank 2, Sensor 1)	• Exhaust leak/damage • Concern with upstream O2 sensor • Upstream O2 sensor not achieving normal operating temperature	Check exhaust system is free from defects and is not leaking. Repair as required, clear DTCs and retest. Check oxygen sensor heater power supply and ground lines for open circuits and shorts. Repair defective wiring as required. Refer to circuit diagrams, check oxygen sensor signal lines to engine control module for open circuits, short circuits and high resistance. Repair circuits as required, clear DTC and retest system. Clean fuel injectors using approved equipment. clear DTCs, retest system. Check fuel for evidence of contamination which may have damaged oxygen sensors or catalysts.

DTC	Description	Possible Cause	Action
		• Wiring between upstream O2 sensor and ECM • Fuel injector flow partially blocked • Catalyst efficiency decrease	
P0051	HO2S Heater Control Circuit Low (Bank 2, Sensor 1)	• Concern with upstream O2 sensor heater • Wiring fault between upstream O2 sensor and ECM • Wiring fault between Upstream O2 sensor and Front Power Distribution Box	Check power supply to HO2S heater element connector pin with the ignition on. If the voltage is less than 10.5 volts check the front power distribution box fuses. Check the wiring circuit from the front power distribution box to the HO2S sensor connector for open circuits or shorts to ground. Repair any wiring faults using approved methods and materials, replace any blown fuses and clear the DTC. retest the system for correct operation. Check wiring circuit between the HO2S sensor connector and the engine control module.
P0052	HO2S Heater Control Circuit High (Bank 2, Sensor 1)	• Concern with upstream O2 sensor heater • Wiring fault between upstream O2 sensor and ECM	Check power supply to HO2S heater element connector pin with the ignition on. If the voltage is less than 10.5 volts check the front power distribution box fuses. Check the wiring circuit from the front power distribution box to the HO2S sensor connector for open circuits or shorts to ground. Repair any wiring faults using approved methods and materials, replace any blown fuses and clear the DTC. retest the system for correct operation.
P0137	O2 Circuit Low Voltage (Bank 1, Sensor 2)	• Concern with downstream O2 sensor • Wiring between downstream O2 sensor and ECM	Check oxygen sensor wiring harness for signs of damage to the insulation. Check the signal and screen circuits for open circuits, and shorts to ground. Check heater circuit power circuit is supplied with power and the control line is not open circuit. Check sensor for evidence of fouling
P0138	O2 Circuit High Voltage (Bank 1, Sensor 2)	• Concern with downstream O2 sensor heater • Wiring fault between downstream O2 sensor and ECM • Wiring fault between downstream O2 sensor and Front Power Distribution Box	Check oxygen sensor wiring harness for signs of damage to the insulation. Check the signal and screen circuits for shorts to power.
P0140	O2 Circuit No Activity Detected (Bank 1, Sensor 2)	• Power supply to oxygen sensor heater not present • Wiring harness fault • Oxygen sensor faulty	Check power distribution box fuses to ensure the heater element of the oxygen sensor is powered. Check oxygen sensor heating element control line is not open circuit or has a high resistance. Check sensor signal lines for open circuits and shorts to ground. Repair wiring fault using approved methods and materials. Check oxygen sensor for contamination or masked sensing tip. Replace the sensor if suspect. Clear DTC, retest the system to confirm correct operation.
P0037	HO2S Heater Control Circuit Low (Bank 1, Sensor 2)	• Concern with downstream O2 sensor heater • Wiring fault between downstream O2 sensor and ECM • Wiring fault between downstream O2 sensor and Front Power Distribution Box	Check power supply to HO2S heater element connector pin with the ignition on. If the voltage is less than 10.5 volts check the front power distribution box fuses. Check the wiring circuit from the front power distribution box to the HO2S sensor connector for open circuits or shorts to ground. Repair any wiring faults using approved methods and materials, replace any blown fuses and clear the DTC. retest the system for correct operation.
P0038	HO2S Heater Control Circuit High (Bank 1, Sensor 2)	• Concern with downstream O2 sensor heater • Wiring fault between downstream O2 sensor and ECM	Check engine wiring harness for signs of damage. Check HO2S heater control circuit for short to power. Check HO2S for internal short circuit. Repair wiring using appropriate methods and materials, clear DTC and retest system for correct operation. Replace HO2S if suspect. Clear DTC and retest systems to confirm correct operation.
P0157	O2 Circuit Low Voltage (Bank 2, Sensor 2)	• Concern with downstream O2 sensor • Wiring fault between downstream O2 sensor and ECM	Check oxygen sensor wiring harness for signs of damage to the insulation. Check the signal and screen circuits for open circuits, and shorts to ground. Check heater circuit power circuit is supplied with power and the control line is not open circuit. Check sensor for evidence of fouling
P0158	O2 Circuit High Voltage (Bank 2, Sensor 2)	• Concern with downstream O2 sensor • Wiring fault between downstream O2 sensor and ECM	Check oxygen sensor wiring harness for signs of damage to the insulation. Check the signal and screen circuits for shorts to power.

Published: 11-May-2011

Electronic Engine Controls - 2.0L NA V6 - AJV6 / 2.5L NA V6 - AJV6 / 3.0L NA V6 - AJ27 - Electronic Engine Controls2.5L NA V6 - AJV6 / 3.0L NA V6 - AJ27, VIN Range: E96603->J28492

Diagnosis and Testing

1. **1.** Verify the customer concern by operating the system.
2. **2.** Visually inspect for obvious signs of mechanical and electrical damage.

Visual Inspection Chart

Mechanical	Electrical
• Engine oil level • Cooling system coolant level • Fuel Contamination • Throttle body	• Fuses (9, 31, 32, 37) • Wiring harness • Electrical connector(s) • Sensor(s) • Engine control module (ECM)

3. **3.** Verify the following systems are working correctly:

- Air intake system
- Cooling system
- Charging system
- Fuel charging system

4. **4.** If an obvious cause for an observed or reported concern is found, correct the cause (if possible) before proceeding to the next step.
5. **5.** If the concern is not visually evident and the Jaguar Approved Diagnostic System is not available, use a fault code reader to retrieve the fault codes before proceeding to the Diagnostic Trouble Code (DTCs) Index Chart.
6. **6.** Make sure that a power supply is present to the ECM from fuse 32 of the engine compartment fuse box before carrying out diagnostic work on the electronic engine control system.

Diagnostic Trouble Code (DTC) Index

DTC	Description	Possible Source	Action
P0116, P0117, P0118, P0125	Concern with engine coolant temperature (ECT) sensor.	• ECT sensor. • ECT sensor circuit(s). • Low/contaminated coolant. • Thermostat failure. • Overheating.	GO to Pinpoint Test A.
P0128	Concern with engine temperature, set by ECT sensor inputs.	• Thermostat. • ECT sensor. • ECT sensor circuit(s).	Mechanical check of thermostat.GO to Pinpoint Test A.
P0335, P0336	Concern with crankshaft position (CKP) sensor.	• CKP sensor. • CKP sensor circuit(s). • CKP sensor air gap. • CKP sensor debris.	GO to Pinpoint Test B.
P0340, P0341	Concern with right-hand bank camshaft position (CMP) sensor.	• CMP sensor. • CMP sensor circuit(s). • CMP sensor air gap. • CMP sensor debris.	GO to Pinpoint Test C.
P1340, P1341	Concern with left-hand bank camshaft position (CMP) sensor.	• CMP sensor. • CMP sensor circuit(s). • CMP sensor air gap. • CMP sensor debris.	GO to Pinpoint Test D.
P0031, P0032	Concern with right-hand bank heated oxygen sensor (HO2S 1/1) heater.	• H02S 1/1 failure. • H02S 1/1 circuit(s). • Fuse 38.	GO to Pinpoint Test E.
P0181, P0182, P0183	Concern with fuel temperature sensor.	• Fuel temperature sensor. • Fuel temperature sensor circuit(s).	GO to Pinpoint Test F.
P0327, P0328, P0332, P0333, P1648	Concern with knock sensor (KS).	• KS. • KS circuit(s). • Poor contact with cylinder block. • ECM failure.	GO to Pinpoint Test G.
P0197, P0198, P0196	Concern with oil temperature sensor.	• Oil temperature sensor. • Oil temperature sensor circuit(s).	GO to Pinpoint Test H.
P0131, P0132	Concern with right-hand bank heated oxygen sensor (HO2S 1/1).	• HO2S 1/1. • HO2S 1/1 circuit(s).	GO to Pinpoint Test I.
P0133	Concern with right-hand bank heated oxygen sensor (HO2S 1/1). Slow response	• Engine misfire. • H02S 1/1 disconnected. • H02S 1/1 mechanical damage. • H02S 1/1 to ECM wiring fault.	GO to Pinpoint Test I. Refer to pinpoint tests for components listed, REFER to: Exhaust System (309-00 Exhaust System, Diagnosis and Testing) / Fuel Charging and Controls - 2.5L NA V6 - AJV6/3.0L NA V6 - AJ27, VIN Range: E96603->J28492 (303-04A Fuel Charging

DTC	Description	Possible Source	Action
		• H02S 1/1 short circuit to ground. • H02S 1/1 wiring shield open circuit. • H02S 1/1 heater circuit fault. • Exhaust leak. • Low exhaust temperature. • Injector flow partially blocked. • Catalyst efficiency decrease. • H02S 1/1 failure.	and Controls - 2.0L NA V6 - AJV6/2.5L NA V6 - AJV6/3.0L NA V6 - AJ27, Diagnosis and Testing).
P1646	Concern with right-hand bank heated oxygen sensor (HO2S 1/1).	• H02S 1/1 heater failure. • H02S 1/1 sensing circuit, short circuit to ground. • H02S 1/1 sensing circuit, short circuit to high voltage. • H02S 1/1 sensing circuit, open circuit. • ECM failure.	GO to Pinpoint Test I. Refer to pinpoint tests for components listed.
P0037, P0038, P0137, P0138	Concern with right-hand bank catalyst monitor sensor (H02S 1/2).	• H02S 1/2. • H02S 1/2 circuit(s). • Fuse 38.	GO to Pinpoint Test J.
P0140	Concern with right-hand bank catalyst monitor sensor (H02S 1/2).	• Exhaust leak. • Low exhaust temperature.	Inspect exhaust system, REFER to: Exhaust System (309-00 Exhaust System, Diagnosis and Testing).
P0151, P0152	Concern with left-hand bank heated oxygen sensor (HO2S 2/1).	• HO2S 2/1. • HO2S 2/1 circuit(s).	GO to Pinpoint Test K.
P0153	Concern with left-hand bank heated oxygen sensor (HO2S 2/1). Slow response	• Engine misfire. • H02S 2/1 disconnected. • H02S 2/1 mechanical damage. • H02S 2/1 to ECM wiring fault. • H02S 2/1 short circuit to ground. • H02S 2/1 wiring shield open circuit. • H02S 2/1 heater circuit fault. • Exhaust leak. • Low exhaust temperature. • Injector flow partially blocked. • Catalyst efficiency decrease. • H02S 2/1 failure.	GO to Pinpoint Test K. Refer to pinpoint tests for components listed, REFER to: Exhaust System (309-00 Exhaust System, Diagnosis and Testing) / Fuel Charging and Controls - 2.5L NA V6 - AJV6/3.0L NA V6 - AJ27, VIN Range: E96603->J28492 (303-04A Fuel Charging and Controls - 2.0L NA V6 - AJV6/2.5L NA V6 - AJV6/3.0L NA V6 - AJ27, Diagnosis and Testing).
P1647	Concern with left-hand bank heated oxygen sensor (HO2S 2/1).	• H02S 2/1 heater failure. • H02S 2/1 sensing circuit, short circuit to ground. • H02S 2/1 sensing circuit, short circuit to high voltage. • H02S 2/1 sensing circuit, open circuit. • ECM failure.	GO to Pinpoint Test K. Refer to pinpoint tests for components listed.
P0057, P0058, P0157, P0158	Concern with left-hand bank catalyst monitor sensor (HO2S 2/2).	• HO2S 2/2. • HO2S 2/2 sensor circuit(s). • Fuse 42.	GO to Pinpoint Test L.
P0160	Concern with left-hand bank catalyst monitor sensor (HO2S 2/2).	• Exhaust leak. • Low exhaust temperature.	Inspect exhaust system, REFER to: Exhaust System (309-00 Exhaust System, Diagnosis and Testing).
P0420	Concern with right-hand bank catalytic converter system. (Efficiency below threshold)	• HO2 sensor disconnected. • HO2 sensor to ECM wiring fault. • HO2 sensor heater to ECM wiring fault. • HO2 sensor heater failure. • Upstream HO2 sensor failure. • Downstream HO2 sensor failure. • HO2 sensor failed. • Catalytic converter	Refer to pinpoint tests for components listed. Visually inspect catalytic converters.

DTC	Description	Possible Source	Action
		failure.	
P0430	Concern with left-hand bank catalytic converter system (Efficiency below threshold).	• HO2 sensor disconnected. • HO2 sensor to ECM wiring fault. • HO2 sensor heater to ECM wiring fault. • HO2 sensor heater failure. • Upstream HO2 sensor failure. • Downstream HO2 sensor failure. • HO2 sensor failed. • Catalytic converter failure.	Refer to pinpoint tests for components listed. Visually inspect catalytic converters, REFER to: Exhaust System (309-00 Exhaust System, Diagnosis and Testing).
P0101, P0102	Concern with mass air flow (MAF) sensor.	• MAF sensor. • MAF sensor circuit(s). • Blocked air filter. • Air intake leak. • Engine breather leak. • Throttle control malfunction.	GO to Pinpoint Test M. Visually inspect components listed, REFER to: Intake Air Distribution and Filtering (303-12A Intake Air Distribution and Filtering - 2.0L NA V6 - AJV6/2.5L NA V6 - AJV6/3.0L NA V6 - AJ27, Diagnosis and Testing) / Fuel Charging and Controls - 2.5L NA V6 - AJV6/3.0L NA V6 - AJ27, VIN Range: E96603->J28492 (303-04A Fuel Charging and Controls - 2.0L NA V6 - AJV6/2.5L NA V6 - AJV6/3.0L NA V6 - AJ27, Diagnosis and Testing).
P0103, P1104	Concern with mass air flow (MAF) sensor.	• MAF sensor. • MAF sensor circuit(s).	GO to Pinpoint Test M.
P0111	Concern with the intake air temperature (IAT) sensor.	• MAF sensor. • MAF sensor circuit(s). • Blocked air filter. • Air intake leak. • Engine breather leak.	GO to Pinpoint Test N. Visually inspect components listed. REFER to: Intake Air Distribution and Filtering (303-12A Intake Air Distribution and Filtering - 2.0L NA V6 - AJV6/2.5L NA V6 - AJV6/3.0L NA V6 - AJ27, Diagnosis and Testing).
P0112, P0113	Concern with the intake air temperature (IAT) sensor.	• Intake air temperature (IAT) sensor. • Intake air temperature (IAT)sensor circuit.	GO to Pinpoint Test N.
P0051, P0052	Concern with the left-hand bank heated oxygen sensor (HO2S 2/1) heater.	• HO2S 2/1. • HO2S 2/1 circuit. • Fuse 42.	GO to Pinpoint Test O.
P1606	Concern with ECM relay.	• ECM. • ECM relay. • ECM relay circuit(s). • Fuse 31.	GO to Pinpoint Test P.
P0105, P1107, P1108	Concern with MAP sensor.	• MAP sensor. • MAP sensor circuits.	GO to Pinpoint Test Q.
P0106, P0107, P0108	Concern with barometric (HAC) sensor.	Barometric sensor within the ECM.	GO to Pinpoint Test Q. INSTALL a new ECM, for additional information, refer to dealer technical support.
P0010, P1384	Concern with VVT circuit, right-hand bank.	• VVT solenoid and circuit. • Oil flow. • Camshaft failure.	GO to Pinpoint Test R. REFER to: Variable Camshaft Timing (VCT) Oil Control Solenoid (303-14A Electronic Engine Controls - 2.0L NA V6 - AJV6/2.5L NA V6 - AJV6/3.0L NA V6 - AJ27, Removal and Installation).
P0020, P1396	Concern with VVT circuit, left-hand bank.	• VVT solenoid and circuit. • Oil flow. • Camshaft failure.	GO to Pinpoint Test S. REFER to: Variable Camshaft Timing (VCT) Oil Control Solenoid (303-14A Electronic Engine Controls - 2.0L NA V6 - AJV6/2.5L NA V6 - AJV6/3.0L NA V6 - AJ27, Removal and Installation).
P1251, P1631, P1657, P1658	Concern with throttle motor relay.	• Throttle motor relay. • Throttle motor relay circuit.	GO to Pinpoint Test T. Check Fuse 18.
P1549	Concern with IMT Valve 1 circuit.	• IMT valve. • IMT valve circuit.	GO to Pinpoint Test U.
P1532	Concern with IMT Valve 2 circuit.	• IMT valve. • IMT valve circuit.	GO to Pinpoint Test V.
P1582	"Flight Recorder" data stored.	This code does not indicate a failure of a component or system.	GO to Pinpoint Test W.
P1240, P1241, P1242	Concern with sensor power supply.	• ECM. • Power supply circuits. • Sensors within the circuit.	GO to Pinpoint Test X.
P1243	Concern with sensor ground circuit.	• ECM. • Sensor ground circuits. • Sensors within the circuit.	GO to Pinpoint Test Y.
P1122, P1123, P1344	Concern with accelerator pedal position sensor; Track 1.	• APP sensor. • APP sensor circuits.	GO to Pinpoint Test Z.

DTC	Description	Possible Source	Action
P1215, P1216, P1344	Concern with accelerator pedal position sensor; Track 3.	• APP sensor. • APP sensor circuits.	GO to Pinpoint Test AA.
P0480	Concern with radiator cooling fan module drive.	• Cooling fan module. • Cooling fan module circuits.	GO to Pinpoint Test AB.
P0646, P0647	Concern with air conditioning clutch relay drive.	• Air conditioning clutch relay. • Air conditioning clutch relay circuits.	GO to Pinpoint Test AC.
P1516, P1517	Concern with P/N switch starting/driving malfunctions.	• CJFB. • Ignition relay. • TR sensor. • Inertia switch and circuits.	GO to Pinpoint Test AD.
P1245, P1246	Concern with engine crank signal, high/low voltage.	• Starter relay. • ECM. • Ignition switch. • Associated circuits.	GO to Pinpoint Test AE.
P1260	Security input malfunction.	• GEM. • Ignition key. • PATS circuits. • CAN network.	Reprogramme key, check CAN network, REFER to: Communications Network - VIN Range: E96603->J28492 (418-00 Module Communications Network, Diagnosis and Testing).
P0506	Idle RPM lower than expected.	• Air intake restriction. • Accessory drive overload. (defective/seized component). • Throttle valve stuck closed. • Throttle body failure.	REFER to: Intake Air Distribution and Filtering (303-12A Intake Air Distribution and Filtering - 2.0L NA V6 - AJV6/2.5L NA V6 - AJV6/3.0L NA V6 - AJ27, Diagnosis and Testing) / Accessory Drive (303-05 Accessory Drive, Diagnosis and Testing) / Fuel Charging and Controls - 2.5L NA V6 - AJV6/3.0L NA V6 - AJ27, VIN Range: E96603->J28492 (303-04A Fuel Charging and Controls - 2.0L NA V6 - AJV6/2.5L NA V6 - AJV6/3.0L NA V6 - AJ27, Diagnosis and Testing).
P0507	Idle RPM higher than expected.	• Speed control switches internal steering wheel circuit; Short circuit to ground. • Steering wheel cassette reel; Short circuit to ground. • Cassette reel to ECM circuit; Short circuit to ground. • RESUME switch failure (stuck ON).	REFER to: Speed Control - 2.5L NA V6 - AJV6/3.0L NA V6 - AJ27 (310-03 Speed Control, Diagnosis and Testing).
P0603, P1611, P1633, P1634, P1656	Concern with powertrain control module (ECM).	ECM.	INSTALL a new ECM. For additional information, refer to dealer technical support.
P0171, P0172, P0174, P0175, P0201, P0202, P0203, P0204, P0205, P0206	Concern with fuel system too lean/rich.	• Fuel injector(s). • Fuel delivery fault.	REFER to: Fuel Charging and Controls - 2.5L NA V6 - AJV6/3.0L NA V6 - AJ27, VIN Range: E96603->J28492 (303-04A Fuel Charging and Controls - 2.0L NA V6 - AJV6/2.5L NA V6 - AJV6/3.0L NA V6 - AJ27, Diagnosis and Testing).
P0300, P0301, P0302, P0303, P0304, P0305, P0306, P1313, P1314, P1316	Concern with ignition system/misfire monitoring.	• Ignition system. • Ignition system wiring harness.	REFER to: Engine Ignition - 2.5L NA V6 - AJV6/3.0L NA V6 - AJ27 (303-07A Engine Ignition - 2.0L NA V6 - AJV6/2.5L NA V6 - AJV6/3.0L NA V6 - AJ27, Diagnosis and Testing).
P0351, P0352, P0353, P0354, P0355, P0356	Concern with ignition primary circuits.	• Ignition modules. • Ignition module circuits.	REFER to: Engine Ignition - 2.5L NA V6 - AJV6/3.0L NA V6 - AJ27 (303-07A Engine Ignition - 2.0L NA V6 - AJV6/2.5L NA V6 - AJV6/3.0L NA V6 - AJ27, Diagnosis and Testing).
P0441, P0442, P0443, P0444, P0445, P0446, P0447, P0448, P0450, P0452, P0453, P0455, P0456	Concern with evaporative emissions system.	• Evaporative/purge valve and circuits. • Fuel tank and lines. • Filler cap. • Carbon canister. • Canister close valve and circuits. • Fuel tank pressure sensor. • Fuel tank vapor port. • Vapor lines.	REFER to: Intake Air Distribution and Filtering (303-12A Intake Air Distribution and Filtering - 2.0L NA V6 - AJV6/2.5L NA V6 - AJV6/3.0L NA V6 - AJ27, Diagnosis and Testing).
P0460	Concern with fuel level sensors.	• Fuel level sensors. • Fuel level sensor circuits. • Instrument cluster.	REFER to: Fuel Charging and Controls - 2.5L NA V6 - AJV6/3.0L NA V6 - AJ27, VIN Range: E96603->J28492 (303-04A Fuel Charging and Controls - 2.0L NA V6 - AJV6/2.5L NA V6 - AJV6/3.0L NA V6 - AJ27, Diagnosis and Testing).
P0560	ECM battery power supply voltage malfunction. (This DTC could be set due to a fuel injection pressure sensor fault. If P0193 is also set, rectify P0193 first).	ECM battery power supply circuit open circuit or high resistance.	Repair the circuit. For additional information, refer to wiring diagrams. CLEAR the DTC. TEST the system for normal operation.

DTC	Description	Possible Source	Action
P0565, P0566, P0567, P0568, P0569, P0570, P0831, P0832, P0834, P0835, P1571	Concern with vehicle speed control.	• Switchpack. • Switchpack circuits. • Clutch cancel switch. • Clutch safety switch. • Brake on/off switch.	REFER to: Speed Control - 2.5L NA V6 - AJV6/3.0L NA V6 - AJ27 (310-03 Speed Control, Diagnosis and Testing).
P0616, P0617	Concern with the starter relay circuit.	• Starter relay. • Starter relay drive circuit.	REFER to: Starting System - 2.5L NA V6 - AJV6/3.0L NA V6 - AJ27 (303-06 Starting System, Diagnosis and Testing).
P1224, P1229, P1250, P1254	Concern with throttle body.	• Throttle motor. • Throttle motor relay. • Throttle motor relay circuits. • Throttle body. • Throttle position sensor. • Throttle position sensor circuits. • Throttle return spring. • Limp-home spring.	REFER to: Fuel Charging and Controls - 2.5L NA V6 - AJV6/3.0L NA V6 - AJ27, VIN Range: E96603->J28492 (303-04A Fuel Charging and Controls - 2.0L NA V6 - AJV6/2.5L NA V6 - AJV6/3.0L NA V6 - AJ27, Diagnosis and Testing).
P1234, P1236, P1338	Concern with fuel pump commands.	• Fuel pump control module. • Fuel pump control module circuits. • ECM.	REFER to: Fuel Charging and Controls - 2.5L NA V6 - AJV6/3.0L NA V6 - AJ27, VIN Range: E96603->J28492 (303-04A Fuel Charging and Controls - 2.0L NA V6 - AJV6/2.5L NA V6 - AJV6/3.0L NA V6 - AJ27, Diagnosis and Testing).
P1244, P1629, P1632, P1146	Concern with charging system.	• Charging system. • Charging system wiring harness.	REFER to: Charging System - 2.0L NA V6 - AJV6/2.5L NA V6 - AJV6/3.0L NA V6 - AJ27 (414-00 Battery and Charging System - General Information, Diagnosis and Testing).
P0191, P0192, P0193	Concern with fuel pressure sensor.	• Fuel pressure sensor circuit(s). • Fuel pressure sensor. • Fuel system leak/blockage.	REFER to: Fuel Charging and Controls - 2.5L NA V6 - AJV6/3.0L NA V6 - AJ27, VIN Range: E96603->J28492 (303-04A Fuel Charging and Controls - 2.0L NA V6 - AJV6/2.5L NA V6 - AJV6/3.0L NA V6 - AJ27, Diagnosis and Testing).
P0121, P0122, P0123, P0222, P0223	Concern with throttle position (TP) sensor.	• TP sensor. • TP sensor circuit(s).	REFER to: Throttle Position (TP) Sensor (303-14A Electronic Engine Controls - 2.0L NA V6 - AJV6/2.5L NA V6 - AJV6/3.0L NA V6 - AJ27, Removal and Installation).
P1000	System check not complete since last memory clear.	OBD errors not cleared by diagnosis.	Carry out comprehensive component monitor drive cycle. Refer to the DTC section of JTIS, accessed by the icon on the opening page.
P1111	System check complete since last memory clear.	This code does not indicate a failure of a component or system.	No action necessary.
P1367	Concern with right-hand bank ignition amplifier.	• Ignition module. • Ignition module circuits.	REFER to: Engine Ignition - 2.5L NA V6 - AJV6/3.0L NA V6 - AJ27 (303-07A Engine Ignition - 2.0L NA V6 - AJV6/2.5L NA V6 - AJV6/3.0L NA V6 - AJ27, Diagnosis and Testing).
P1368	Concern with left-hand bank ignition amplifier.	• Ignition module. • Ignition module circuits.	REFER to: Engine Ignition - 2.5L NA V6 - AJV6/3.0L NA V6 - AJ27 (303-07A Engine Ignition - 2.0L NA V6 - AJV6/2.5L NA V6 - AJV6/3.0L NA V6 - AJ27, Diagnosis and Testing).
P1656	Concern with TP sensor amplifier circuit.	ECM.	INSTALL a new ECM. For additional information, refer to, dealer technical support.
P1609	CPU to CPU communications.	ECM.	INSTALL a new ECM. For additional information, refer to, dealer technical support.
P1637, P1638. P1642, P1643, P1699	Concern with CAN network.	CAN network modules and circuits.	REFER to: Communications Network - VIN Range: E96603->J28492 (418-00 Module Communications Network, Diagnosis and Testing).

PINPOINT TEST A : DTC P0116, P0117, P0118, P0125. ECT SENSOR	
TEST CONDITIONS	**DETAILS/RESULTS/ACTIONS**
A1: CHECK THE ENGINE COOLANT TEMPERATURE (ECT) SENSOR SIGNAL WIRE FOR OPEN CIRCUIT	
	1 Turn the ignition switch to the OFF position.
	2 Disconnect the ECT sensor electrical connector EN18.
	3 Disconnect the ECM electrical connector, EN16.
	4 Measure the resistance between the ECT sensor electrical connector EN18, pin 2 (UY) and the ECM electrical connector EN16, pin 70 (UY).
	Is the resistance less than 5 ohms? **Yes** GO to A2. **No** REPAIR the circuit. For additional information, refer to the wiring diagrams. CLEAR the DTCs. TEST the system for normal operation.
A2: CHECK THE ECT SENSOR SIGNAL WIRE FOR A SHORT TO GROUND	
	1 Measure the resistance between the ECT sensor electrical connector EN18, pin 2 (UY) and EN16, pin 19.
	Is the resistance less than 10,000 ohms? **Yes** REPAIR the short to GROUND. For additional information, refer to the wiring diagrams. CLEAR the DTCs. TEST the system for normal operation. **No** GO to A3.
A3: CHECK THE ECT SENSOR GROUND CIRCUIT	
	1 Measure the resistance between the ECT sensor electrical connector EN18, pin 1 (BG) and EN16, pin 19.

	Is the resistance less than 5 ohms? **Yes** GO to A4. **No** REPAIR the circuit. For additional information, refer to the wiring diagrams. CLEAR the DTCs. TEST the system for normal operation.
A4: CHECK THE ECT SENSOR GROUND CIRCUIT FOR A SHORT TO BATTERY POSITIVE	
	1 Turn the ignition switch to the ON position.
	2 Measure the voltage between the ECT electrical connector EN18, pin 1 (BG) and GROUND.
	Is the voltage greater than 1 volt? **Yes** REPAIR the short to battery. For additional information, refer to the wiring diagrams. CLEAR the DTCs. TEST the system for normal operation. **No** GO to A5.
A5: CHECK THE ECT SENSOR CIRCUIT FOR A SHORT TO BATTERY POSITIVE	
	1 Connect the ECM electrical connector EN16.
	2 Turn the ignition switch to the ON position.
	3 Measure the voltage between the ECT sensor electrical connector EN18, pin 2 (UY) and GROUND.
	Is the voltage greater than 5 volts? **Yes** REPAIR the short to battery. For additional information, refer to the wiring diagrams. CLEAR the DTCs. TEST the system for normal operation. **No** INSTALL a new ECT sensor. CLEAR the DTCs. TEST the system for normal operation. If the DTC is repeated, INSTALL a new ECM. REFER to: Engine Control Module (ECM) (303-14B Electronic Engine Controls - 2.0L Duratorq-TDCi/2.2L Duratorq-TDCi (110kW/150PS) - Puma, Removal and Installation). Before replacing an ECM, contact dealer technical support.

PINPOINT TEST B : DTC P0335, P0336, P1245, P1246. CRANKSHAFT POSITION (CKP) SENSOR	
TEST CONDITIONS	**DETAILS/RESULTS/ACTIONS**
B1: CHECK THE CKP SENSOR FOR CORRECT INSTALLATION	
	1 Turn the ignition switch to the OFF position.
	2 Check the CKP sensor for correct installation.
	Is the CKP sensor correctly installed? **Yes** GO to B2. **No** INSTALL the CKP sensor correctly. REFER to: Crankshaft Position (CKP) Sensor (303-14A Electronic Engine Controls - 2.0L NA V6 - AJV6/2.5L NA V6 - AJV6/3.0L NA V6 - AJ27, Removal and Installation). Reconnect the sensor. CLEAR the DTCs. TEST the system for normal operation.
B2: CHECK THE CKP SENSOR FOR DEBRIS	
	1 Remove the CKP sensor and inspect for debris.
	Is the CKP sensor free of debris? **Yes** GO to B3. **No** CLEAN the sensor and wheel. INSTALL the sensor. REFER to: Crankshaft Position (CKP) Sensor (303-14A Electronic Engine Controls - 2.0L NA V6 - AJV6/2.5L NA V6 - AJV6/3.0L NA V6 - AJ27, Removal and Installation). Reconnect the sensor. CLEAR the DTCs. TEST the system for normal operation.
B3: CHECK THE CKP SENSOR GROUND WIRE FOR OPEN CIRCUIT	
	1 Disconnect the ECM electrical connector EN16.
	2 Disconnect the CKP sensor electrical connector EN12.
	3 Measure the resistance between the CKP sensor electrical connector EN12, pin 1 (Y) and the ECM electrical connector EN16, pin 37 (Y).
	Is the resistance less than 5 ohms? **Yes** GO to B4. **No** REPAIR the circuit. For additional information, refer to the wiring diagrams. Reconnect all connectors. CLEAR the DTCs. TEST the system for normal operation.
B4: CHECK THE CKP SENSOR SIGNAL WIRE FOR OPEN CIRCUIT	
	1 Measure the resistance between the CKP sensor electrical connector EN12, pin 2 (P) and the ECM electrical connector EN16, pin 36 (P).
	Is the resistance less than 5 ohms? **Yes** GO to B5. **No** REPAIR the circuit. For additional information, refer to the wiring diagrams. Reconnect all connectors. CLEAR the DTCs. TEST the system for normal operation.
B5: CHECK THE CKP SENSOR GROUND WIRE FOR A SHORT TO GROUND	
	1 Measure the resistance between the CKP sensor electrical connector EN12 pin 1 (Y) and GROUND.
	Is the resistance less than 10,000 ohms? **Yes** REPAIR the short to GROUND. For additional information, refer to the wiring diagrams. Reconnect all connectors. CLEAR the DTCs. TEST the system for normal operation. **No** GO to B6.
B6: CHECK THE CKP SENSOR SIGNAL WIRE FOR A SHORT TO GROUND	
	1 Measure the resistance between the CKP sensor electrical connector EN12 pin 2 (P) and GROUND.

	Is the resistance less than 10,000 ohms? **Yes** REPAIR the short to GROUND. For additional information, refer to the wiring diagrams. Reconnect all connectors. CLEAR the DTCs. TEST the system for normal operation. **No** GO to B7.
B7: CHECK THE CKP SENSOR GROUND WIRE FOR A SHORT TO BATTERY	
	1 Turn the ignition switch to the ON position.
	2 Measure the voltage between the CKP sensor electrical connector EN12 pin 1 (Y) and GROUND.
	Is the voltage greater than 1 volt? **Yes** REPAIR the short to battery. For additional information, refer to the wiring diagrams. Reconnect all connectors. CLEAR the DTCs. TEST the system for normal operation. **No** GO to B8.
B8: CHECK THE CKP SENSOR SIGNAL WIRE FOR A SHORT TO BATTERY	
	1 Turn the ignition switch to the ON position.
	2 Measure the voltage between the CKP sensor electrical connector EN12 pin 2 (P) and GROUND.
	Is the voltage greater than 1 volt? **Yes** REPAIR the short to battery. For additional information, refer to the wiring diagrams. Reconnect all connectors. CLEAR the DTCs. TEST the system for normal operation. **No** INSTALL a new CKP sensor. REFER to: Crankshaft Position (CKP) Sensor (303-14A Electronic Engine Controls - 2.0L NA V6 - AJV6/2.5L NA V6 - AJV6/3.0L NA V6 - AJ27, Removal and Installation). Reconnect all connectors. CLEAR the DTCs. TEST the system for normal operation. If the concern persists INSTALL a new ECM. REFER to: Engine Control Module (ECM) (303-14B Electronic Engine Controls - 2.0L Duratorq-TDCi/2.2L Duratorq-TDCi (110kW/150PS) - Puma, Removal and Installation). Before replacing an ECM, contact dealer technical support.

PINPOINT TEST C : DTC P0340, P0341: RIGHT-HAND BANK CAMSHAFT POSITION (CMP) SENSOR	
TEST CONDITIONS	**DETAILS/RESULTS/ACTIONS**
C1: CHECK THE RIGHT-HAND BANK CMP SENSOR FOR CORRECT INSTALLATION	
	1 Turn the ignition switch to the OFF position.
	2 Check the CMP sensor for correct installation.
	Is the CMP sensor correctly installed? **Yes** GO to C2. **No** INSTALL the CMP sensor correctly. REFER to: Camshaft Position (CMP) Sensor (303-14A Electronic Engine Controls - 2.0L NA V6 - AJV6/2.5L NA V6 - AJV6/3.0L NA V6 - AJ27, Removal and Installation). CLEAR the DTCs. TEST the system for normal operation.
C2: CHECK THE RIGHT-HAND BANK CMP SENSOR FOR FOREIGN DEBRIS	
	1 Remove the CMP sensor and inspect for foreign debris.
	Is the CMP sensor free of foreign debris? **Yes** GO to C3. **No** CLEAN the sensor and wheel. INSTALL the sensor. REFER to: Camshaft Position (CMP) Sensor (303-14A Electronic Engine Controls - 2.0L NA V6 - AJV6/2.5L NA V6 - AJV6/3.0L NA V6 - AJ27, Removal and Installation). CLEAR the DTCs. TEST the system for normal operation.
C3: CHECK THE RIGHT-HAND BANK CMP SENSOR SIGNAL WIRE FOR OPEN CIRCUIT	
	1 Disconnect the ECM electrical connector EN16.
	2 Disconnect the CMP sensor electrical connector EN43.
	3 Measure the resistance between the CMP sensor electrical connector EN43, pin 1 (O) and the ECM electrical connector EN16, pin 94 (O).
	Is the resistance less than 5 ohms? **Yes** GO to C4. **No** REPAIR the circuit. For additional information, refer to the wiring diagrams. CLEAR the DTCs. TEST the system for normal operation.
C4: CHECK THE RIGHT-HAND BANK CMP GROUND WIRE FOR OPEN CIRCUIT	
	1 Measure the resistance between the CMP sensor electrical connector EN43, pin 2 (B) and the ECM electrical connector EN16, pin 95 (B).
	Is the resistance less than 5 ohms? **Yes** GO to C5. **No** REPAIR the circuit. For additional information, refer to the wiring diagrams. CLEAR the DTCs. TEST the system for normal operation.
C5: CHECK THE RIGHT-HAND BANK CMP SENSOR SIGNAL CIRCUIT FOR A SHORT TO GROUND	
	1 Measure the resistance between the CMP sensor electrical connector EN43, pin 1 (O) and GROUND.
	Is the resistance less than 10,000 ohms? **Yes** REPAIR the short to GROUND. For additional information, refer to the wiring diagrams. CLEAR the DTCs. TEST the system for normal operation. **No** GO to C6.
C6: CHECK THE RIGHT-HAND BANK CMP SENSOR GROUND CIRCUIT FOR A SHORT TO GROUND	
	1 Measure the resistance between the CMP sensor electrical connector EN43, pin 2 (B) and GROUND.

	Is the resistance less than 10,000 ohms? **Yes** REPAIR the short to GROUND. For additional information, refer to the wiring diagrams. CLEAR the DTCs. TEST the system for normal operation. **No** GO to C7.
C7: CHECK THE RIGHT-HAND BANK CMP SENSOR SIGNAL CIRCUIT FOR A SHORT TO BATTERY	
	1 Turn the ignition switch to the ON position.
	2 Measure the voltage between the CMP sensor electrical connector EN43, pin 1 (O) and GROUND.
	Is the voltage greater than 1 volt? **Yes** REPAIR the short to battery. For additional information, refer to the wiring diagrams. CLEAR the DTCs. TEST the system for normal operation. **No** GO to C8.
C8: CHECK THE RIGHT-HAND BANK CMP SENSOR GROUND CIRCUIT FOR A SHORT TO BATTERY	
	1 Turn the ignition switch to the ON position.
	2 Measure the voltage between the CMP sensor electrical connector EN43, pin 2 (B) and GROUND.
	Is the voltage greater than 1 volt? **Yes** REPAIR the short to battery. For additional information, refer to the wiring diagrams. CLEAR the DTCs. TEST the system for normal operation. **No** INSTALL a new CMP sensor. REFER to: Camshaft Position (CMP) Sensor (303-14A Electronic Engine Controls - 2.0L NA V6 - AJV6/2.5L NA V6 - AJV6/3.0L NA V6 - AJ27, Removal and Installation). CLEAR the DTCs. TEST the system for normal operation. If the DTC is repeated, INSTALL a new ECM. REFER to: Engine Control Module (ECM) (303-14B Electronic Engine Controls - 2.0L Duratorq-TDCi/2.2L Duratorq-TDCi (110kW/150PS) - Puma, Removal and Installation). Before replacing an ECM, contact dealer technical support.

PINPOINT TEST D : DTC P1340, P1341: LEFT-HAND BANK CAMSHAFT POSITION (CMP) SENSOR	
TEST CONDITIONS	**DETAILS/RESULTS/ACTIONS**
D1: CHECK THE LEFT-HAND BANK CMP SENSOR FOR CORRECT INSTALLATION	
	1 Turn the ignition switch to the OFF position.
	2 Check the CMP sensor for correct installation.
	Is the CMP sensor correctly installed? **Yes** GO to D2. **No** INSTALL the CMP sensor correctly. REFER to: Camshaft Position (CMP) Sensor (303-14A Electronic Engine Controls - 2.0L NA V6 - AJV6/2.5L NA V6 - AJV6/3.0L NA V6 - AJ27, Removal and Installation). CLEAR the DTCs. TEST the system for normal operation.
D2: CHECK THE LEFT-HAND BANK CMP SENSOR FOR FOREIGN DEBRIS	
	1 Remove the CMP sensor and inspect for foreign debris.
	Is the CMP sensor free of foreign debris? **Yes** GO to D3. **No** CLEAN the sensor and wheel. INSTALL the sensor. REFER to: Camshaft Position (CMP) Sensor (303-14A Electronic Engine Controls - 2.0L NA V6 - AJV6/2.5L NA V6 - AJV6/3.0L NA V6 - AJ27, Removal and Installation). CLEAR the DTCs. TEST the system for normal operation.
D3: CHECK THE LEFT-HAND BANK CMP SENSOR SIGNAL WIRE FOR OPEN CIRCUIT	
	1 Disconnect the ECM electrical connector EN16.
	2 Disconnect the CMP sensor electrical connector EN33.
	3 Measure the resistance between the CMP sensor electrical connector EN33, pin 1 (G) and the ECM electrical connector EN16, pin 68 (G).
	Is the resistance less than 5 ohms? **Yes** GO to D4. **No** REPAIR the circuit. For additional information, refer to the wiring diagrams. CLEAR the DTCs. TEST the system for normal operation.
D4: CHECK THE LEFT-HAND BANK CMP GROUND WIRE FOR OPEN CIRCUIT	
	1 Measure the resistance between the CMP sensor electrical connector EN33, pin 2 (N) and the ECM electrical connector EN16, pin 69 (N).
	Is the resistance less than 5 ohms? **Yes** GO to D5. **No** REPAIR the circuit. For additional information, refer to the wiring diagrams. CLEAR the DTCs. TEST the system for normal operation.
D5: CHECK THE LEFT-HAND BANK CMP SENSOR SIGNAL CIRCUIT FOR A SHORT TO GROUND	
	1 Measure the resistance between the CMP sensor electrical connector EN33, pin 1 (G) and GROUND.
	Is the resistance less than 10,000 ohms? **Yes** REPAIR the short to GROUND. For additional information, refer to the wiring diagrams. CLEAR the DTCs. TEST the system for normal operation. **No** GO to D6.
D6: CHECK THE LEFT-HAND BANK CMP SENSOR GROUND CIRCUIT FOR A SHORT TO GROUND	
	1 Disconnect the ECM electrical connector, EN16.
	2 Measure the resistance between the CMP sensor electrical connector EN33, pin 2 (N) and GROUND.

	Is the resistance less than 10,000 ohms? **Yes** REPAIR the short to GROUND. For additional information, refer to the wiring diagrams. CLEAR the DTCs. TEST the system for normal operation. **No** GO to D7.
D7: CHECK THE LEFT-HAND BANK CMP SENSOR SIGNAL CIRCUIT FOR A SHORT TO BATTERY	
	1 Turn the ignition switch to the ON position.
	2 Measure the voltage between the CMP sensor electrical connector EN33, pin 1 (G) and GROUND.
	Is the voltage greater than 1 volt? **Yes** REPAIR the short to battery. For additional information, refer to the wiring diagrams. CLEAR the DTCs. TEST the system for normal operation. **No** GO to D8.
D8: CHECK THE LEFT-HAND BANK CMP SENSOR GROUND CIRCUIT FOR A SHORT TO BATTERY	
	1 Turn the ignition switch to the ON position.
	2 Measure the voltage between the CMP sensor electrical connector EN33, pin 2 (N) and GROUND.
	Is the voltage greater than 1 volt? **Yes** REPAIR the short to battery. For additional information, refer to the wiring diagrams. CLEAR the DTCs. TEST the system for normal operation. **No** INSTALL a new CMP sensor. REFER to: Camshaft Position (CMP) Sensor (303-14A Electronic Engine Controls - 2.0L NA V6 - AJV6/2.5L NA V6 - AJV6/3.0L NA V6 - AJ27, Removal and Installation). CLEAR the DTCs. TEST the system for normal operation. If the DTC is repeated, INSTALL a new ECM. REFER to: Engine Control Module (ECM) (303-14B Electronic Engine Controls - 2.0L Duratorq-TDCi/2.2L Duratorq-TDCi (110kW/150PS) - Puma, Removal and Installation). Before replacing an ECM, contact dealer technical support.

PINPOINT TEST E : DTC P0031, P0032. RIGHT-HAND BANK HO2S HEATER	
TEST CONDITIONS	**DETAILS/RESULTS/ACTIONS**
E1: CHECK THE POWER SUPPLY CIRCUIT TO THE RIGHT-HAND BANK HO2S HEATER	
	1 Disconnect HO2S sensor electrical connector, EN37.
	2 Turn the ignition switch to the ON position.
	3 Measure the voltage between the HO2S electrical connector EN37, pin 2 (WG) and GROUND.
	Is the voltage less than 10 volts? **Yes** GO to E5. **No** GO to E2.
E2: CHECK THE GROUND CIRCUIT TO THE RIGHT-HAND BANK HO2S HEATER FOR OPEN CIRCUIT	
	1 Turn the ignition switch to the OFF position.
	2 Disconnect the ECM electrical connector EN16.
	3 Measure the resistance between the HO2S electrical connector EN37, pin 1 (RU) and the ECM electrical connector EN16, pin 1 and pin 2 (RU).
	Is the resistance of each wire less than 5 ohms? **Yes** GO to E3. **No** REPAIR the circuit. For additional information, refer to the wiring diagrams. CLEAR the DTCs. TEST the system for normal operation.
E3: CHECK THE RIGHT-HAND BANK HO2S GROUND CIRCUIT FOR SHORT TO GROUND	
	1 Measure the resistance between the bank 1 HO2S electrical connector EN37, pin 1 (RU) and GROUND.
	Is the resistance less than 10,000 ohms? **Yes** REPAIR the short to GROUND. For additional information, refer to the wiring diagrams. CLEAR the DTCs. TEST the system for normal operation. **No** GO to E4.
E4: CHECK THE RIGHT-HAND BANK HO2S GROUND CIRCUIT FOR SHORT TO BATTERY	
	1 Check for a voltage between the HO2S electrical connector EN37, pin 1 (RU) and GROUND.
	Is the voltage greater than 1 volt? **Yes** REPAIR the short to battery. For additional information, refer to the wiring diagrams. CLEAR the DTCs. TEST the system for normal operation. **No** INSTALL a new HO2S. REFER to: Heated Oxygen Sensor (HO2S) RH (303-14A Electronic Engine Controls - 2.0L NA V6 - AJV6/2.5L NA V6 - AJV6/3.0L NA V6 - AJ27, Removal and Installation). CLEAR the DTCs. TEST the system for normal operation. If the DTC is repeated, INSTALL a new ECM. REFER to: Engine Control Module (ECM) (303-14B Electronic Engine Controls - 2.0L Duratorq-TDCi/2.2L Duratorq-TDCi (110kW/150PS) - Puma, Removal and Installation). Before replacing an ECM, contact dealer technical support.
E5: CHECK FUSE 38 OF THE ENGINE COMPARTMENT FUSE BOX	
	1 Check the fuse.
	Is the fuse OK? **Yes** GO to E7. **No** GO to E6.
E6: CHECK FUSE 38 OF THE ENGINE COMPARTMENT FUSE BOX FOR A SHORT TO GROUND	
	1 Measure the resistance between electrical connector JB34 pin 97 of the engine compartment fuse box and GROUND.

	Is the resistance less than 10,000 ohms? **Yes** REPAIR short to ground between the engine compartment fuse box and the right-hand bank HO2S. For additional information, refer to the wiring diagrams. CLEAR the DTC. TEST the system for normal operation. **No** INSTALL a new fuse. CLEAR the DTC. TEST the system for normal operation.
E7: CHECK THE POWER SUPPLY TO FUSE 38 IN THE ENGINE COMPARTMENT FUSE BOX	
	1 Turn the ignition switch to the ON position.
	2 Measure the voltage between electrical connector JB34 pin 131 and GROUND.
	Is the voltage less than 10 volts? **Yes** Repair the circuit between the battery and the EMS relay. Test the relay, renew as necessary. CLEAR the DTC. TEST the system for normal operation. **No** Repair the circuit from the ECM control relay to the engine compartment fuse box. For additional information, refer to the wiring diagrams.GO to P1. CLEAR the DTC. TEST the system for normal operation.

PINPOINT TEST F : DTC P0181, P0182, P0183. FUEL TEMPERATURE SENSOR	
TEST CONDITIONS	**DETAILS/RESULTS/ACTIONS**
F1: CHECK CONTINUITY OF THE FUEL TEMPERATURE SENSOR POWER SUPPLY CIRCUIT	
	1 Turn the ignition switch to the OFF position.
	2 Disconnect the fuel temperature sensor electrical connector IJ8.
	3 Disconnect the ECM electrical connector EN16.
	4 Measure the resistance between the fuel temperature sensor electrical connector IJ8, pin 2 (WU) and the ECM electrical connector EN16, pin 50 (WU).
	Is the resistance less than 5 ohms? **Yes** GO to F2. **No** REPAIR the circuit. For additional information, refer to the wiring diagrams. CLEAR the DTCs. TEST the system for normal operation.
F2: CHECK THE FUEL TEMPERATURE SENSOR GROUND CIRCUIT	
	1 Measure the resistance between the fuel temperature sensor electrical connector IJ8 pin 1 (NU) and GROUND.
	Is the resistance less than 5 ohms? **Yes** GO to F3. **No** REPAIR the circuit. For additional information, refer to the wiring diagrams. CLEAR the DTCs. TEST the system for normal operation.
F3: CHECK THE FUEL TEMPERATURE SENSOR CIRCUIT FOR A SHORT TO GROUND	
	1 Measure the resistance between the fuel temperature sensor electrical connector IJ8 pin 2 (WU) and GROUND.
	Is the resistance less than 10,000 ohms? **Yes** REPAIR the short to GROUND. For additional information, refer to the wiring diagrams. CLEAR the DTCs. TEST the system for normal operation. **No** GO to F4.
F4: CHECK THE FUEL TEMPERATURE SENSOR GROUND CIRCUIT FOR A SHORT TO BATTERY	
	1 Disconnect the FTP sensor electrical connector, FT1.
	2 Turn the ignition switch to the ON position.
	3 Check for a voltage between FT1, pin 3 (BG) and GROUND.
	Is the voltage greater than 1 volt? **Yes** REPAIR the short to battery. For additional information, refer to the wiring diagrams. CLEAR the DTCs. TEST the system for normal operation. **No** GO to F5.
F5: CHECK THE FUEL TEMPERATURE SENSOR CIRCUIT FOR A SHORT TO BATTERY	
	1 Connect the ECM electrical connector EN16.
	2 Turn the ignition switch to the ON position.
	3 Measure the voltage between the fuel temperature sensor electrical connector IJ8, pin 2 (WU) and GROUND.
	Is the voltage greater than 10 volts? **Yes** REPAIR the short to battery. For additional information, refer to the wiring diagrams. CLEAR the DTCs. TEST the system for normal operation. **No** INSTALL a new fuel temperature sensor. REFER to: Fuel Temperature Sensor - 2.5L NA V6 - AJV6/3.0L NA V6 - AJ27 (303-14A Electronic Engine Controls - 2.0L NA V6 - AJV6/2.5L NA V6 - AJV6/3.0L NA V6 - AJ27, Removal and Installation). CLEAR the DTCs. TEST the system for normal operation. If the DTC is repeated, INSTALL a new ECM. REFER to: Engine Control Module (ECM) (303-14B Electronic Engine Controls - 2.0L Duratorq-TDCi/2.2L Duratorq-TDCi (110kW/150PS) - Puma, Removal and Installation). Before replacing an ECM, contact dealer technical support.

PINPOINT TEST G : DTC P0327, P0328, P0332, P0333, P1648. KNOCK SENSOR (KS)	
TEST CONDITIONS	**DETAILS/RESULTS/ACTIONS**
G1: CHECK THE KS SIGNAL WIRE FOR OPEN CIRCUIT	
	1 Turn the ignition switch to the OFF position.
	2 Disconnect the KS sensor electrical connector EN23.
	3 Disconnect the ECM electrical connector EN16.
	4 Measure the resistance between EN23, pin 1 (N) and EN16, pin 98 (N).

	Is the resistance less than 5 ohms? **Yes** GO to G2. **No** REPAIR the circuit. For additional information, refer to the wiring diagrams. CLEAR the DTCs. TEST the system for normal operation.
G2: CHECK THE KS SIGNAL WIRE FOR SHORT TO BATTERY	
	1 Turn the ignition switch to the ON position.
	2 Check for a voltage between EN23, pin 1 (N) and GROUND.
	Is a voltage present? **Yes** REPAIR the short to battery. For additional information, refer to the wiring diagrams. CLEAR the DTCs. TEST the system for normal operation. **No** GO to G3.
G3: CHECK THE KS SIGNAL WIRE FOR A SHORT TO GROUND	
	1 Measure the resistance between the KS sensor electrical connector EN23, pin 1 (N) and GROUND.
	Is the resistance less than 10,000 ohms? **Yes** REPAIR the short to GROUND. For additional information, refer to the wiring diagrams. CLEAR the DTCs. TEST the system for normal operation. **No** INSTALL a new KS. REFER to: Knock Sensor (KS) (303-14B Electronic Engine Controls - 2.0L Duratorq-TDCi/2.2L Duratorq-TDCi (110kW/150PS) - Puma, Removal and Installation). CLEAR DTCs. TEST the system for normal operation. If the DTC is repeated, INSTALL a new ECM. REFER to: Engine Control Module (ECM) (303-14B Electronic Engine Controls - 2.0L Duratorq-TDCi/2.2L Duratorq-TDCi (110kW/150PS) - Puma, Removal and Installation). Before replacing an ECM, contact dealer technical support.
G4: CHECK THE KS GROUND CIRCUIT FOR OPEN CIRCUIT	
	1 Measure the resistance between the KS electrical connector EN23 pin 2 (W) and GROUND.
	Is the resistance greater than 5 ohms? **Yes** REPAIR the circuit between EN23, pin 2 (W) and GROUND. CLEAR the DTCs. TEST the system for normal operation. (This circuit includes the ECM. For additional information, refer to wiring diagrams) **No** GO to G5.
G5: CHECK THE KS GROUND LEAD FOR OPEN CIRCUIT	
	1 Disconnect the KS electrical connector, EN23.
	2 Disconnect the ECM electrical connector, EN16.
	3 Measure the resistance between EN23, pin2 (W) and EN16, pin 100 (BG).
	Is the resistance less than 5 ohms? **Yes** GO to G6. **No** REPAIR the circuit between EN23, pin2 (W) and EN16, pin 100 (BG). For additional information, refer to the wiring diagrams. CLEAR the DTCs. TEST the system for normal operation.
G6: CHECK THE KS GROUND LEAD FOR SHORT TO BATTERY	
	1 Connect the KS sensor electrical connector EN23.
	2 Connect the ECM electrical connector EN16.
	3 Turn the ignition switch to the ON position.
	4 Check for a voltage between EN23, pin 2 (W) and GROUND.
	Is the voltage greater than 1 volt? **Yes** REPAIR the short to battery. For additional information, refer to the wiring diagrams. CLEAR the DTCs. TEST the system for normal operation. **No** INSTALL a new KS. REFER to: Knock Sensor (KS) (303-14B Electronic Engine Controls - 2.0L Duratorq-TDCi/2.2L Duratorq-TDCi (110kW/150PS) - Puma, Removal and Installation). CLEAR the DTCs. TEST the system for normal operation. If the DTC is repeated, INSTALL a new ECM. REFER to: Engine Control Module (ECM) (303-14B Electronic Engine Controls - 2.0L Duratorq-TDCi/2.2L Duratorq-TDCi (110kW/150PS) - Puma, Removal and Installation). Before replacing an ECM, contact dealer technical support.

PINPOINT TEST H : DTC P0196, P0197, P0198. OIL TEMPERATURE SENSOR	
TEST CONDITIONS	**DETAILS/RESULTS/ACTIONS**
H1: CHECK THE OIL TEMPERATURE SENSOR SIGNAL WIRE FOR OPEN CIRCUIT	
	1 Turn the ignition switch to the OFF position.
	2 Disconnect the oil temperature sensor electrical connector EN25.
	3 Disconnect the ECM electrical connector EN16.
	4 Measure the resistance between the oil temperature sensor electrical connector EN25, pin 1 (Y) and the ECM electrical connector EN16, pin 78 (Y).
	Is the resistance less than 5 ohms? **Yes** GO to H2. **No** REPAIR the circuit. For additional information, refer to the wiring diagrams. CLEAR the DTCs. TEST the system for normal operation.
H2: CHECK THE OIL TEMPERATURE SENSOR GROUND CIRCUIT FOR OPEN CIRCUIT	
	1 Measure the resistance between the oil temperature sensor electrical connector EN25, pin 2 (BG) and GROUND.
	Is the resistance less than 5 ohms? **Yes** GO to H3. **No** REPAIR the circuit. For additional information, refer to the wiring diagrams. CLEAR the DTCs. TEST the system for

	normal operation.
H3: CHECK THE OIL TEMPERATURE SENSOR GROUND CIRCUIT FOR SHORT TO BATTERY	
	1 Connect ECM electrical connector, EN16.
	2 Turn the ignition switch to the ON position.
	3 Measure the voltage between the oil temperature sensor electrical connector EN25, pin 2 (BG) and GROUND.
	Is the voltage greater than 1 volt? **Yes** REPAIR the short circuit. For additional information, refer to the wiring diagrams. CLEAR the DTCs. TEST the system for normal operation. **No** GO to H4.
H4: CHECK THE OIL TEMPERATURE SENSOR CIRCUIT FOR A SHORT TO GROUND	
	1 Turn the ignition switch to the OFF position.
	2 Disconnect ECM electrical connector, EN16.
	3 Measure the resistance between the oil temperature sensor electrical connector EN25, pin 1 (Y) and GROUND.
	Is the resistance less than 10,000 ohms? **Yes** REPAIR the short to GROUND. For additional information, refer to the wiring diagrams. CLEAR the DTCs. TEST the system for normal operation. **No** GO to H5.
H5: CHECK THE OIL TEMPERATURE SENSOR CIRCUIT FOR A SHORT TO BATTERY	
	1 Connect ECM electrical connector, EN16.
	2 Turn the ignition switch to the ON position.
	3 Measure the voltage between the oil temperature sensor electrical connector EN25, pin 1 (Y) and GROUND.
	Is the voltage greater than 10 volts? **Yes** REPAIR the short to battery. For additional information, refer to the wiring diagrams. CLEAR the DTCs. TEST the system for normal operation. **No** INSTALL a new oil temperature sensor. REFER to: Oil Temperature Sensor (303-14A Electronic Engine Controls - 2.0L NA V6 - AJV6/2.5L NA V6 - AJV6/3.0L NA V6 - AJ27, Removal and Installation). CLEAR the DTCs. TEST the system for normal operation. If the DTC is repeated, INSTALL a new ECM. REFER to: Engine Control Module (ECM) (303-14B Electronic Engine Controls - 2.0L Duratorq-TDCi/2.2L Duratorq-TDCi (110kW/150PS) - Puma, Removal and Installation). Before replacing an ECM, contact dealer technical support.

PINPOINT TEST I : DTC P0131, P0132, P0133, P1646. RIGHT-HAND BANK HO2S	
TEST CONDITIONS	**DETAILS/RESULTS/ACTIONS**
I1: CHECK THE CONSTANT CIRCUIT OF THE RIGHT-HAND BANK HO2S FOR OPEN CIRCUIT	
	1 Disconnect the HO2S electrical connector EN37.
	2 Disconnect the ECM electrical connector, EN16.
	3 Measure the resistance between EN16, pin 84 (P) and EN37, pin 4 (P).
	Is the resistance less than 5 ohms? **Yes** GO to I2. **No** REPAIR the circuit. For additional information, refer to the wiring diagrams. CLEAR the DTCs. TEST the system for normal operation.
I2: CHECK THE CONSTANT CIRCUIT OF THE RIGHT-HAND BANK HO2S FOR SHORT TO GROUND	
	1 Measure the resistance between EN16, pin 84 (P) and GROUND.
	Is the resistance less than 10,000 ohms? **Yes** REPAIR the short circuit. For additional information, refer to the wiring diagrams. CLEAR the DTCs. TEST the system for normal operation. **No** GO to I3.
I3: CHECK THE CONSTANT CIRCUIT OF THE RIGHT-HAND BANK HO2S FOR SHORT TO BATTERY	
	1 Connect the ECM electrical connector EN16.
	2 Turn the ignition switch to the ON position.
	3 Measure the voltage between EN37, pin 4 (P) and GROUND.
	Is the voltage greater than 5 volts? **Yes** REPAIR the short circuit. For additional information, refer to the wiring diagrams. CLEAR the DTCs. TEST the system for normal operation. **No** GO to I4.
I4: CHECK THE VARIABLE CIRCUIT OF THE RIGHT-HAND BANK HO2S FOR OPEN CIRCUIT	
	1 Disconnect the ECM electrical connector, EN16.
	2 Measure the resistance between EN16, pin 83 (Y) and EN37, pin 3 (Y).
	Is the resistance less than 5 ohms? **Yes** GO to I5. **No** REPAIR the circuit. For additional information, refer to the wiring diagrams. CLEAR the DTCs. TEST the system for normal operation.
I5: CHECK THE VARIABLE CIRCUIT OF THE RIGHT-HAND BANK HO2S FOR SHORT TO GROUND	
	1 Measure the resistance between EN16, pin 83 (Y) and GROUND.
	Is the resistance less than 10,000 ohms? **Yes** REPAIR the short circuit. For additional information, refer to the wiring diagrams. CLEAR the DTCs. TEST the system for normal operation. **No** GO to I6.

I6: CHECK THE VARIABLE CIRCUIT OF THE RIGHT-HAND BANK HO2S FOR SHORT TO BATTERY	
	1 Connect the ECM electrical connector EN16.
	2 Turn the ignition switch to the ON position.
	3 Measure the voltage between EN37, pin 3 (Y) and GROUND.
	Is the voltage greater than 5 volts? **Yes** REPAIR the short circuit. For additional information, refer to the wiring diagrams. CLEAR the DTCs. TEST the system for normal operation. **No** INSTALL a new HO2S. REFER to: Heated Oxygen Sensor (HO2S) RH (303-14A Electronic Engine Controls - 2.0L NA V6 - AJV6/2.5L NA V6 - AJV6/3.0L NA V6 - AJ27, Removal and Installation). CLEAR the DTCs. TEST the system for normal operation. If the DTC is repeated, INSTALL a new ECM. REFER to: Engine Control Module (ECM) (303-14B Electronic Engine Controls - 2.0L Duratorq-TDCi/2.2L Duratorq-TDCi (110kW/150PS) - Puma, Removal and Installation). Before replacing an ECM, contact dealer technical support.

PINPOINT TEST J : DTC P0037, P0038, P0137, P0138, P0140. RIGHT-HAND BANK CATALYST MONITOR	
TEST CONDITIONS	**DETAILS/RESULTS/ACTIONS**
J1: CHECK THE POWER SUPPLY CIRCUIT TO THE RIGHT-HAND BANK CATALYST MONITOR HEATER	
	1 Turn the ignition switch to the OFF position.
	2 Disconnect the catalyst monitor sensor electrical connector EN14.
	3 Turn the ignition switch to the ON position.
	4 Measure the voltage between the catalyst monitor sensor electrical connector EN14, pin 2 (WG) and GROUND.
	Is the voltage less than 10 volts? **Yes** GO to J6. **No** GO to J2.
J2: CHECK CONTINUITY OF THE RIGHT-HAND BANK CATALYST MONITOR SENSOR GROUND CIRCUIT	
	1 Turn the ignition switch to the OFF position.
	2 Disconnect the ECM electrical connector EN16.
	3 Measure the resistance between the catalyst monitor sensor electrical connector EN14, pin 3 (W) and the ECM electrical connector EN16, pin 130.
	Is the resistance less than 5 ohms? **Yes** GO to J3. **No** REPAIR the circuit. For additional information, refer to the wiring diagrams. CLEAR the DTCs. TEST the system for normal operation.
J3: CHECK CONTINUITY OF THE POWER SUPPLY WIRE TO THE RIGHT-HAND BANK CATALYST MONITOR SENSOR	
	1 Measure the resistance between the RH bank catalyst monitor sensor electrical connector EN14, pin 4 (N) and the ECM electrical connector EN16, pin 128 (N).
	Is the resistance less than 5 ohms? **Yes** GO to J4. **No** REPAIR the circuit. For additional information, refer to the wiring diagrams. CLEAR the DTCs. TEST the system for normal operation.
J4: CHECK THE RIGHT-HAND BANK CATALYST MONITOR SENSOR POWER SUPPLY WIRE FOR A SHORT TO GROUND	
	1 Measure the resistance between the catalyst monitor sensor electrical connector EN14, pin 4 (N) and GROUND.
	Is the resistance less than 10,000 ohms? **Yes** REPAIR the short to ground. For additional information, refer to the wiring diagrams. CLEAR the DTCs. TEST the system for normal operation. **No** GO to J5.
J5: CHECK THE RIGHT-HAND BANK CATALYST MONITOR SENSOR POWER SUPPLY WIRE FOR A SHORT TO BATTERY	
	1 Measure the voltage between the catalyst monitor sensor electrical connector EN14, pin 4 (N) and GROUND.
	Is the voltage greater than 1 volt? **Yes** REPAIR the short to battery. For additional information, refer to the wiring diagrams. CLEAR the DTCs. TEST the system for normal operation. **No** INSTALL a new RH bank catalyst monitor sensor. For additional information, REFER to: Catalyst Monitor Sensor RH (303-14A Electronic Engine Controls - 2.0L NA V6 - AJV6/2.5L NA V6 - AJV6/3.0L NA V6 - AJ27, Removal and Installation). CLEAR the DTCs. TEST the system for normal operation. If the DTC is repeated, INSTALL a new ECM. For additional information, REFER to: Engine Control Module (ECM) (303-14B Electronic Engine Controls - 2.0L Duratorq-TDCi/2.2L Duratorq-TDCi (110kW/150PS) - Puma, Removal and Installation). Before replacing an ECM, contact dealer technical support.
J6: CHECK THE RIGHT-HAND BANK CATALYST MONITOR SENSOR POWER SUPPLY CIRCUIT	
	1 Measure the voltage between the catalyst monitor sensor electrical connector EN14 pin 2 (WG) and GROUND.
	Is the voltage less than 10 volts? **Yes** GO to J8. **No** GO to J7.
J7: CHECK CONTINUITY OF THE RIGHT-HAND BANK CATALYST MONITOR SENSOR HEATER GROUND CIRCUIT	
	1 Turn the ignition switch to the OFF position.
	2 Disconnect the ECM electrical connector EN16.
	3 Measure the resistance between the catalyst monitor sensor electrical connector EN14, pin 1 (U) and the ECM electrical connector EN16, pin 92 (U).

	Is the resistance less than 5 ohms? **Yes** INSTALL a new ECM. For additional information, REFER to: Engine Control Module (ECM) (303-14B Electronic Engine Controls - 2.0L Duratorq-TDCi/2.2L Duratorq-TDCi (110kW/150PS) - Puma, Removal and Installation). Before replacing a ECM, contact Dealer technical support. **No** REPAIR the circuit. For additional information, refer to the wiring diagrams. CLEAR the DTCs. TEST the system for normal operation.
J8: CHECK FUSE 38 OF THE ENGINE COMPARTMENT FUSE BOX	
	1 Check the fuse.
	Is the fuse OK? **Yes** GO to J10. **No** GO to J9.
J9: CHECK FUSE 38 OF THE ENGINE COMPARTMENT FUSE BOX FOR A SHORT TO GROUND	
	1 Measure the resistance between electrical connector JB34, pin 97 of the engine compartment fuse box and GROUND.
	Is the resistance less than 10,000 ohms? **Yes** REPAIR short to ground between the engine compartment fuse box and the right-hand bank HO2S. CLEAR the DTC. TEST the system for normal operation. **No** INSTALL a new fuse. Check the circuit for cause of fuse failure. CLEAR the DTC. TEST the system for normal operation.
J10: CHECK THE POWER SUPPLY TO FUSE 38 IN THE ENGINE COMPARTMENT FUSE BOX	
	1 Measure the voltage between fuse 38 electrical connector JB34 pin 97 and GROUND.
	Is the voltage less than 10 volts? **Yes** Repair the circuit from the ECM control relay to the engine compartment fuse box. CLEAR the DTC. TEST the system for normal operation. **No** Repair the circuit between the engine compartment fuse box and the HO2S. For additional information, refer to wiring diagrams. CLEAR the DTC. TEST the system for normal operation.

PINPOINT TEST K : P0151, P0152, P0153, P1647. LEFT-HAND BANK HO2S

TEST CONDITIONS	DETAILS/RESULTS/ACTIONS
K1: CHECK THE CONSTANT CIRCUIT OF THE LEFT-HAND BANK HO2S FOR OPEN CIRCUIT	
	1 Disconnect the HO2S electrical connector EN32.
	2 Disconnect the ECM electrical connector EN16.
	3 Measure the resistance between EN16, pin 108 (P) and EN32, pin 4 (P)
	Is the resistance less than 5 ohms? **Yes** GO to K2. **No** REPAIR the circuit. For additional information, refer to the wiring diagrams. CLEAR the DTCs. TEST the system for normal operation.
K2: CHECK THE CONSTANT CIRCUIT OF THE LEFT-HAND BANK HO2S FOR SHORT TO GROUND	
	1 Measure the resistance between EN16, pin 108 (P) and GROUND.
	Is the resistance less than 10,000 ohms? **Yes** REPAIR the short circuit. For additional information, refer to the wiring diagrams. CLEAR the DTCs. TEST the system for normal operation. **No** GO to K3.
K3: CHECK THE CONSTANT CIRCUIT OF THE LEFT-HAND BANK HO2S FOR SHORT TO BATTERY	
	1 Connect the ECM electrical connector EN16.
	2 Turn the ignition switch to the ON position.
	3 Measure the voltage between EN32, pin 4 (P) and GROUND.
	Is the voltage greater than 5 volts? **Yes** REPAIR the short circuit. For additional information, refer to the wiring diagrams. CLEAR the DTCs. TEST the system for normal operation. **No** GO to K4.
K4: CHECK THE VARIABLE CIRCUIT OF THE LEFT-HAND BANK HO2S FOR OPEN CIRCUIT	
	1 Disconnect the HO2S electrical connector EN32.
	2 Disconnect the ECM electrical connector EN16.
	3 Measure the resistance between EN16, pin 107 (Y) and EN32, pin 3 (Y)
	Is the resistance less than 5 ohms? **Yes** GO to K5. **No** REPAIR the circuit. For additional information, refer to the wiring diagrams. CLEAR the DTCs. TEST the system for normal operation.
K5: CHECK THE VARIABLE CIRCUIT OF THE LEFT-HAND BANK HO2S FOR SHORT TO GROUND	
	1 Measure the resistance between EN16, pin 107 (Y) and GROUND.
	Is the resistance less than 10,000 ohms? **Yes** REPAIR the short circuit. For additional information, refer to the wiring diagrams. CLEAR the DTCs. TEST the system for normal operation. **No** GO to K6.
K6: CHECK THE VARIABLE CIRCUIT OF THE LEFT-HAND BANK HO2S FOR SHORT TO BATTERY	
	1 Connect the ECM electrical connector EN16.
	2 Turn the ignition switch to the ON position.

	3 Measure the voltage between EN32 pin 3 (Y) and GROUND.
	Is the voltage greater than 5 volts? **Yes** REPAIR the short circuit. For additional information, refer to the wiring diagrams. CLEAR the DTCs. TEST the system for normal operation. **No** INSTALL a new left-hand HO2S. REFER to: Heated Oxygen Sensor (HO2S) LH (303-14A Electronic Engine Controls - 2.0L NA V6 - AJV6/2.5L NA V6 - AJV6/3.0L NA V6 - AJ27, Removal and Installation). CLEAR the DTCs. TEST the system for normal operation. If the DTC is repeated, INSTALL a new ECM. REFER to: Engine Control Module (ECM) (303-14B Electronic Engine Controls - 2.0L Duratorq-TDCi/2.2L Duratorq-TDCi (110kW/150PS) - Puma, Removal and Installation). Before replacing an ECM, contact dealer technical support.

PINPOINT TEST L : DTC P0057, P0058, P0157, P0158, P0160. LEFT-HAND BANK CATALYST MONITOR	
TEST CONDITIONS	**DETAILS/RESULTS/ACTIONS**
L1: CHECK THE POWER SUPPLY CIRCUIT TO THE LEFT-HAND BANK CATALYST MONITOR HEATER	
	1 Turn the ignition switch to the OFF position.
	2 Disconnect the catalyst monitor sensor electrical connector EN9.
	3 Turn the ignition switch to the ON position.
	4 Measure the voltage between the catalyst monitor sensor electrical connector EN9 pin 2 (WR) and GROUND.
	Is the voltage less than 10 volts? **Yes** GO to L6. **No** GO to L2.
L2: CHECK CONTINUITY OF THE LEFT-HAND BANK CATALYST MONITOR SENSOR GROUND CIRCUIT	
	1 Turn the ignition switch to the OFF position.
	2 Disconnect the ECM electrical connector EN16.
	3 Measure the resistance between the catalyst monitor sensor electrical connector EN9 pin 3 (W) and EN16, pin 130.
	Is the resistance less than 5 ohms? **Yes** GO to L3. **No** REPAIR the circuit. For additional information, refer to the wiring diagrams. CLEAR the DTCs. TEST the system for normal operation.
L3: CHECK CONTINUITY OF THE POWER SUPPLY WIRE TO THE LEFT-HAND BANK CATALYST MONITOR SENSOR	
	1 Measure the resistance between the catalyst monitor sensor electrical connector EN9 pin 4 (N) and the ECM electrical connector EN16 pin 129 (N).
	Is the resistance less than 5 ohms? **Yes** GO to L4. **No** REPAIR the circuit. For additional information, refer to the wiring diagrams. CLEAR the DTCs. TEST the system for normal operation.
L4: CHECK THE LEFT-HAND BANK CATALYST MONITOR SENSOR POWER SUPPLY WIRE FOR A SHORT TO GROUND	
	1 Measure the resistance between the catalyst monitor sensor electrical connector EN9 pin 4 (N) and GROUND.
	Is the resistance less than 10,000 ohms? **Yes** REPAIR the short to ground. For additional information, refer to the wiring diagrams. CLEAR the DTCs. TEST the system for normal operation. **No** GO to L5.
L5: CHECK THE LEFT-HAND BANK CATALYST MONITOR SENSOR POWER SUPPLY WIRE FOR A SHORT TO BATTERY	
	1 Measure the voltage between the catalyst monitor sensor electrical connector EN9 pin 4 (N) and GROUND.
	Is the voltage greater than 1 volt? **Yes** REPAIR the short to battery. For additional information, refer to the wiring diagrams. CLEAR the DTCs. TEST the system for normal operation. **No** INSTALL a new left-hand bank catalyst monitor sensor. For additional information, REFER to: Catalyst Monitor Sensor LH (303-14A Electronic Engine Controls - 2.0L NA V6 - AJV6/2.5L NA V6 - AJV6/3.0L NA V6 - AJ27, Removal and Installation). CLEAR the DTCs. TEST the system for normal operation. If the DTC is repeated, INSTALL a new ECM. For additional information, REFER to: Engine Control Module (ECM) (303-14B Electronic Engine Controls - 2.0L Duratorq-TDCi/2.2L Duratorq-TDCi (110kW/150PS) - Puma, Removal and Installation). Before replacing an ECM, contact dealer technical support.
L6: CHECK THE LEFT-HAND BANK CATALYST MONITOR SENSOR POWER SUPPLY CIRCUIT	
	1 Measure the voltage between the catalyst monitor sensor electrical connector EN9 pin 2 (WR) and GROUND.
	Is the voltage less than 10 volts? **Yes** GO to L8. **No** GO to L7.
L7: CHECK CONTINUITY OF THE LEFT-HAND BANK CATALYST MONITOR SENSOR HEATER GROUND CIRCUIT	
	1 Turn the ignition switch to the OFF position.
	2 Disconnect the ECM electrical connector EN16.
	3 Measure the resistance between the catalyst monitor sensor electrical connector EN9 pin 1 (UY) and the ECM electrical connector EN16 pin 93 (UY).
	Is the resistance less than 5 ohms? **Yes** INSTALL a new ECM. For additional information, REFER to: Engine Control Module (ECM) (303-14B Electronic Engine Controls - 2.0L Duratorq-TDCi/2.2L Duratorq-TDCi (110kW/150PS) - Puma, Removal and Installation). Before replacing an ECM, contact dealer technical support. **No**

	REPAIR the circuit. For additional information, refer to the wiring diagrams. CLEAR the DTCs. TEST the system for normal operation.
L8: CHECK FUSE 42 OF THE ENGINE COMPARTMENT FUSE BOX	
	1 Check the fuse.
	Is the fuse OK? **Yes** GO to L10. **No** GO to L9.
L9: CHECK FUSE 42 OF THE ENGINE COMPARTMENT FUSE BOX FOR A SHORT TO GROUND	
	1 Measure the resistance between electrical connector JB34 pin 105 of the engine compartment fuse box and GROUND.
	Is the resistance less than 10,000 ohms? **Yes** REPAIR short to ground between the engine compartment fuse box and the left-hand bank HO2S. For additional information, refer to wiring diagrams. CLEAR the DTC. TEST the system for normal operation. **No** INSTALL a new fuse. Check the circuit for cause of fuse failure. CLEAR the DTC. TEST the system for normal operation.
L10: CHECK THE POWER SUPPLY TO FUSE 42 IN THE ENGINE COMPARTMENT FUSE BOX	
	1 Measure the voltage between Fuse 42 electrical connector JB34 pin 105 and GROUND.
	Is the voltage less than 10 volts? **Yes** Repair the circuit from the ECM control relay to the engine compartment fuse box. For additional information, refer to wiring diagrams. CLEAR the DTC. TEST the system for normal operation. **No** Repair the circuit between the engine compartment fuse box and the HO2S. For additional information, refer to wiring diagrams.

PINPOINT TEST M : DTC P0101, P0102, P0103, P1104. MASS AIR FLOW SENSOR (MAF)	
TEST CONDITIONS	**DETAILS/RESULTS/ACTIONS**
M1: CHECK THE MAF SENSOR POWER SUPPLY	
	1 Turn the ignition switch to the OFF position.
	2 Disconnect the MAF sensor electrical connector EN6.
	3 Turn the ignition switch to the ON position.
	4 Measure the voltage between the MAF sensor electrical connector EN6 pin 1 (GU) and GROUND.
	Is the voltage less than 10 volts? **Yes** GO to M5. **No** GO to M2.
M2: CHECK CONTINUITY OF THE MAF SENSOR GROUND CIRCUIT	
	1 Turn the ignition switch to the OFF position.
	2 Disconnect the ECM electrical connector EN16.
	3 Measure the resistance between the MAF sensor electrical connector EN6 pin 3 (GW) and the ECM electrical connector EN16 pin 44 (GW).
	Is the resistance less than 5 ohms? **Yes** GO to M3. **No** REPAIR the circuit. For additional information, refer to the wiring diagrams. CLEAR the DTCs. TEST the system for normal operation.
M3: CHECK CONTINUITY OF THE MAF SENSOR GROUND CIRCUIT	
	1 Measure the resistance between the MAF sensor electrical connector EN6 pin 2 (BW) and the ECM electrical connector EN16 pin 45 and pin 46 (BW).
	Is the resistance less than 5 ohms? **Yes** GO to M4. **No** REPAIR the circuit. For additional information, refer to the wiring diagrams. CLEAR the DTCs. TEST the system for normal operation.
M4: CHECK THE MAF SENSOR CIRCUIT FOR SHORT TO GROUND	
	1 Measure the resistance between the MAF sensor electrical connector EN6 pin 3 (GW) and GROUND.
	Is the resistance greater than 10,000 ohms? **Yes** INSTALL a new MAF sensor. For additional information, REFER to: Mass Air Flow (MAF) Sensor (303-14A Electronic Engine Controls - 2.0L NA V6 - AJV6/2.5L NA V6 - AJV6/3.0L NA V6 - AJ27, Removal and Installation). CLEAR DTCs. TEST the system for normal operation. If the DTC is repeated, INSTALL a new ECM. For additional information, REFER to: Engine Control Module (ECM) (303-14B Electronic Engine Controls - 2.0L Duratorq-TDCi/2.2L Duratorq-TDCi (110kW/150PS) - Puma, Removal and Installation). Before replacing an ECM, contact dealer technical support. **No** REPAIR the short to ground. For additional information, refer to the wiring diagrams. CLEAR the DTCs. TEST the system for normal operation.
M5: CHECK FUSE 36 OF THE ENGINE COMPARTMENT FUSE BOX	
	1 Check the fuse.
	Is the fuse OK? **Yes** GO to M7. **No** GO to M6.
M6: CHECK FUSE 36 OF THE ENGINE COMPARTMENT FUSE BOX FOR A SHORT TO GROUND	
	1 Measure the resistance between electrical connector JB34 pin 93 of the engine compartment fuse box and GROUND.

	Is the resistance less than 10,000 ohms? **Yes** REPAIR short to ground between the engine compartment fuse box and the MAF sensor. For additional information, refer to wiring diagrams. CLEAR the DTC. TEST the system for normal operation. **No** INSTALL a new fuse. Check the circuit for cause of fuse failure. CLEAR the DTC. TEST the system for normal operation.
M7: CHECK THE POWER SUPPLY FROM FUSE 36 IN THE ENGINE COMPARTMENT FUSE BOX TO THE MAF SENSOR	
	1 Measure the voltage between the engine compartment fuse box electrical connector JB34 pin 93 and GROUND.
	Is the voltage less than 10 volts? **Yes** Repair the circuit from the engine compartment fuse box to the MAF sensor. For additional information, refer to wiring diagrams. CLEAR the DTC. TEST the system for normal operation. **No** Recheck DTCs.

PINPOINT TEST N : P0111, P0112, P0113. IAT SENSOR	
TEST CONDITIONS	**DETAILS/RESULTS/ACTIONS**
N1: CHECK CONTINUITY OF THE INTAKE AIR TEMPERATURE (IAT) SENSOR POWER SUPPLY CIRCUIT	
	1 Turn the ignition switch to the OFF position.
	2 Disconnect the MAF sensor electrical connector EN6.
	3 Disconnect the ECM electrical connector EN16.
	4 Measure the resistance between the MAF sensor electrical connector EN6 pin 4 (O) and the ECM electrical connector EN16, pin 71 (O).
	Is the resistance less than 5 ohms? **Yes** GO to N2. **No** REPAIR the circuit. For additional information, refer to the wiring diagrams. CLEAR the DTCs. TEST the system for normal operation.
N2: CHECK CONTINUITY OF THE IAT SENSOR CIRCUIT	
	1 Measure the resistance between the MAF sensor electrical connector EN6 pin 5 (BG) and the ECM electrical connector EN16, pin 19 (BG).
	Is the resistance less than 5 ohms? **Yes** GO to N4. **No** REPAIR the circuit. For additional information, refer to the wiring diagrams. CLEAR the DTCs. TEST the system for normal operation.
N3: CHECK THE IAT SENSOR CIRCUIT FOR SHORT TO BATTERY	
	1 Turn the ignition switch to the OFF position.
	2 Disconnect the MAF sensor electrical connector EN6.
	3 Check for a voltage between EN6 pin 5 (BG) and GROUND.
	Is the voltage greater than 1 volt? **Yes** GO to N1. **No** INSTALL a new MAF sensor. REFER to: Mass Air Flow (MAF) Sensor (303-14A Electronic Engine Controls - 2.0L NA V6 - AJV6/2.5L NA V6 - AJV6/3.0L NA V6 - AJ27, Removal and Installation). CLEAR the DTC. TEST the system for normal operation.
N4: CHECK THE IAT SENSOR POWER SUPPLY CIRCUIT FOR SHORT TO GROUND	
	1 Measure the resistance between the MAF sensor electrical connector EN6 pin 4 (O) and GROUND.
	Is the resistance less than 10,000 ohms? **Yes** REPAIR the short to GROUND. For additional information, refer to the wiring diagrams. CLEAR the DTCs. TEST the system for normal operation. **No** GO to N5.
N5: CHECK THE IAT SENSOR GROUND CIRCUIT FOR SHORT TO BATTERY	
	1 Connect the ECM electrical connector, EN16.
	2 Turn the ignition switch to the ON position.
	3 Check for voltage at EN6 pin 5 (BG)
	Is the voltage greater than 1 volt? **Yes** REPAIR the short circuit. For additional information, refer to the wiring diagrams. CLEAR the DTCs. TEST the system for normal operation. **No** INSTALL a new MAF sensor. REFER to: Mass Air Flow (MAF) Sensor (303-14A Electronic Engine Controls - 2.0L NA V6 - AJV6/2.5L NA V6 - AJV6/3.0L NA V6 - AJ27, Removal and Installation). CLEAR the DTCs. TEST the system for normal operation. If the DTC is repeated, INSTALL a new ECM. REFER to: Engine Control Module (ECM) (303-14B Electronic Engine Controls - 2.0L Duratorq-TDCi/2.2L Duratorq-TDCi (110kW/150PS) - Puma, Removal and Installation). Before replacing an ECM, contact dealer technical support.

PINPOINT TEST O : DTC P0051, P0052. LEFT-HAND BANK H02S HEATER	
TEST CONDITIONS	**DETAILS/RESULTS/ACTIONS**
O1: CHECK THE POWER SUPPLY CIRCUIT TO THE LEFT-HAND BANK HO2S HEATER	
	1 Turn the ignition switch to the ON position.
	2 Measure the voltage between the HO2S electrical connector EN32 pin 2 (WR) and GROUND.
	Is the voltage less than 10 volts? **Yes** GO to O4. **No**

	GO to O2.
O2: CHECK THE GROUND CIRCUIT TO THE LEFT-HAND BANK HO2S HEATER	
	1 Turn the ignition switch to the OFF position.
	2 Disconnect the ECM electrical connector EN16.
	3 Measure the resistance between the HO2S electrical connector EN32 pin 1 (GO) and the ECM electrical connector EN16 pins 55 and 56 (GO).
	Is the resistance of each wire less than 5 ohms? **Yes** GO to O3. **No** REPAIR the circuit. For additional information, refer to the wiring diagrams. CLEAR the DTCs. TEST the system for normal operation.
O3: CHECK THE LEFT-HAND BANK HO2S CIRCUIT FOR SHORT TO GROUND	
	1 Measure the resistance between the HO2S electrical connector EN32 pin 1 (GO) and GROUND.
	Is the resistance less than 10,000 ohms? **Yes** REPAIR the short to ground. For additional information, refer to the wiring diagrams. CLEAR the DTCs. TEST the system for normal operation. **No** INSTALL a new left-hand bank HO2S. For additional information, REFER to: Heated Oxygen Sensor (HO2S) LH (303-14A Electronic Engine Controls - 2.0L NA V6 - AJV6/2.5L NA V6 - AJV6/3.0L NA V6 - AJ27, Removal and Installation). CLEAR DTCs. TEST the system for normal operation. If the DTC is repeated, INSTALL a new ECM. For additional information, REFER to: Engine Control Module (ECM) (303-14B Electronic Engine Controls - 2.0L Duratorq-TDCi/2.2L Duratorq-TDCi (110kW/150PS) - Puma, Removal and Installation). Before replacing an ECM, contact dealer technical support.
O4: CHECK FUSE 42 OF THE ENGINE COMPARTMENT FUSE BOX	
	1 Check the fuse.
	Is the fuse OK? **Yes** GO to O6. **No** GO to O5.
O5: CHECK FUSE 42 OF THE ENGINE COMPARTMENT FUSE BOX FOR A SHORT TO GROUND	
	1 Measure the resistance between electrical connector JB34 pin 105 of the engine compartment fuse box and GROUND
	Is the resistance less than 10,000 ohms? **Yes** REPAIR short to ground between the engine compartment fuse box and the left-hand bank HO2S. For additional information, refer to wiring digrams. CLEAR the DTC. TEST the system for normal operation. **No** INSTALL a new fuse. Check the circuit for cause of fuse failure. CLEAR the DTC. TEST the system for normal operation.
O6: CHECK THE POWER SUPPLY TO FUSE 42 IN THE ENGINE COMPARTMENT FUSE BOX	
	1 Measure the voltage between fuse 42, electrical connector JB34 pin 105 and GROUND.
	Is the voltage less than 10 volts? **Yes** Repair the circuit from the ECM control relay to the engine compartment fuse box. For additional information, refer to wiring digrams. CLEAR the DTC. TEST the system for normal operation. **No** Repair the circuit between the engine compartment fuse box and the HO2S. For additional information, refer to wiring digrams. CLEAR the DTC. TEST the system for normal operation.

PINPOINT TEST P : DTC P1606. ECM RELAY.	
TEST CONDITIONS	**DETAILS/RESULTS/ACTIONS**
P1: CHECK THE ECM CONTROL RELAY	
	1 Turn the ignition switch to the ON position.
	Does the ECM relay make an audible click? **Yes** GO to P2. **No** GO to P6.
P2: CHECK FOR POWER SUPPLY FROM THE ECM CONTROL RELAY	
	1 Measure the voltage between the ECM control relay JB34 pin 131 and GROUND.
	Is the voltage less than 10 volts? **Yes** GO to P3. **No** REPAIR the circuit from the ECM control relay to the ECM. For additional information, refer to wiring digrams. CLEAR the DTC. TEST the system for normal operation.
P3: CHECK FUSE 9 IN THE ENGINE COMPARTMENT FUSE BOX	
	1 Check the fuse.
	Is the fuse OK? **Yes** GO to P4. **No** INSTALL a new fuse. Check the circuit for cause of fuse failure. CLEAR the DTC. TEST the system for normal operation.
P4: CHECK THE POWER SUPPLY TO FUSE 9 IN THE ENGINE COMPARTMENT FUSE BOX	
	1 Measure the voltage between Fuse 9 electrical connector JB34 pin 75 and GROUND.
	Is the voltage less than 10 volts? **Yes** Repair the circuit from the battery positive to the engine compartment fuse box. CLEAR the DTC. TEST the system for normal operation. **No** GO to P5.
P5: CHECK THE POWER SUPPLY FROM FUSE 9 IN THE ENGINE COMPARTMENT FUSE BOX TO THE ECM CONTROL RELAY	

	1 Measure the voltage between the ECM control relay electrical connector JB34 pin 132 and GROUND.
	Is the voltage less than 10 volts? **Yes** Repair the circuit from the engine compartment fuse box to the ECM control relay. CLEAR the DTC. TEST the system for normal operation. **No** INSTALL a new ECM control relay. For additional information, refer to the electrical guide. CLEAR the DTC. TEST the system for normal operation.
P6: CHECK FUSE 31 OF THE ENGINE COMPARTMENT FUSE BOX	
	1 Check the fuse.
	Is the fuse OK? **Yes** GO to P7. **No** GO to P10.
P7: CHECK POWER SUPPLY TO THE ECM CONTROL RELAY FROM FUSE 31 OF THE ENGINE COMPARTMENT FUSE BOX	
	1 Measure the voltage between ECM relay electrical connector JB34 pin 133 and GROUND.
	Is the voltage less than 10 volts? **Yes** GO to P8. **No** GO to P12.
P8: CHECK CONTINUITY OF THE ECM CONTROL RELAY GROUND CIRCUIT	
	1 Disconnect the ECM electrical connector EN16.
	2 Remove the ECM control relay from the engine compartment fuse box.
	3 Measure the resistance between the ECM electrical connector EN16 pin 40 and JB34 pin 134 of the engine compartment fuse box.
	Is the resistance less than 5 ohms? **Yes** GO to P9. **No** REPAIR the circuit. For additional information, refer to wiring diagrams. CLEAR the DTC. TEST the system for normal operation. (This circuit includes the power distribution fuse box and the EMS relay and diode)
P9: CHECK CONTINUITY OF THE ECM CONTROL RELAY WINDING	
	1 Measure the resistance of the ECM control relay winding between pins 1 and 2 of the ECM control relay.
	Is the resistance less than 60 ohms? **Yes** INSTALL a new ECM control relay. CLEAR the DTC. TEST the system for normal operation. **No** INSTALL a new ECM. REFER to: Engine Control Module (ECM) (303-14B Electronic Engine Controls - 2.0L Duratorq-TDCi/2.2L Duratorq-TDCi (110kW/150PS) - Puma, Removal and Installation). Before replacing an ECM, contact dealer technical support. CLEAR the DTC. TEST the system for normal operation.
P10: CHECK FUSE 31 OF THE ENGINE COMPARTMENT FUSE BOX FOR A SHORT TO GROUND	
	1 Measure the resistance between electrical connector JB34 pin 83 of the engine compartment fuse box and GROUND.
	Is the resistance less than 10,000 ohms? **Yes** REPAIR short to GROUND between the engine compartment fuse box and the ECM control relay. CLEAR the DTC. TEST the system for normal operation. **No** INSTALL a new fuse. CLEAR the DTC. TEST the system for normal operation.
P11: CHECK FUSE 9 OF THE ENGINE COMPARTMENT FUSE BOX FOR A SHORT TO GROUND	
	1 Measure the resistance between electrical connector JB34 pin 132 of the engine compartment fuse box and GROUND.
	Is the resistance less than 10,000 ohms? **Yes** REPAIR short to ground between the engine compartment fuse box and the ECM control relay. CLEAR the DTC. TEST the system for normal operation. **No** INSTALL a new fuse. CLEAR the DTC. TEST the system for normal operation.
P12: CHECK THE ECM CONTROL RELAY DIODE	
	1 Remove the ECM control relay diode from the engine compartment fuse box.
	2 Measure the continuity of ECM control relay diode.
	Is the resistance less than 5 ohms? **Yes** Possible intermittent fault. Recheck DTCs. **No** INSTALL a new ECM control relay diode. Make sure that the ECM control relay diode is installed correctly. For additional information, refer to the wiring diagrams. CLEAR the DTC. TEST the system for normal operation.

PINPOINT TEST Q : P0105, P0106, P0107, P0108, P1107, P1108. MAP SENSOR

TEST CONDITIONS	DETAILS/RESULTS/ACTIONS
Q1: CHECK THE GROUND CIRCUIT TO THE MAP SENSOR	
	1 Disconnect the MAP sensor electrical conector EN8.
	2 Measure the resistance between the MAP sensor electrical conector EN8 pin 4 (BG) and GROUND. • Reconnect electrical connectors following test.
	Is the resistance less than 5 ohms? **Yes** GO to Q2. **No** REPAIR the circuit between the MAP sensor and GROUND. For additional information, refer to wiring diagrams. CLEAR the DTC. TEST the system for normal operation.
Q2: CHECK THE POWER SUPPLY CIRCUIT TO THE MAP SENSOR FOR SHORT TO BATTERY	
	1 Turn the ignition switch to the ON position.

	2 Measure the voltage between the MAP sensor electrical connector EN8 pin 2 (OY) and GROUND.
	Is the voltage greater than 6 volts? **Yes** REPAIR the short to battery. For additional information, refer to wiring diagrams. CLEAR the DTC. TEST the system for normal operation. **No** GO to Q3.
Q3: CHECK THE POWER SUPPLY CIRCUIT TO THE MAP SENSOR FOR SHORT TO GROUND	
	1 Turn the ignition switch to the ON position.
	2 Measure the voltage between the MAP sensor electrical connector EN8 pin 2 (OY) and GROUND.
	Is the voltage less than 4 volts? **Yes** REPAIR the short to GROUND. For additional information, refer to wiring diagrams. CLEAR the DTC. TEST the system for normal operation. **No** GO to Q4.
Q4: CHECK CONTINUITY OF THE MAP SENSOR SIGNAL WIRE	
	1 Turn the ignition switch to the OFF position.
	2 Disconnect the MAP sensor electrical connector EN8.
	3 Disconnect the ECM electrical connector EN16.
	4 Measure the resistance of the circuit between MAP sensor electrical connector EN8 pin 1 (BW) and ECM electrical connector EN16 pin 127 (BW).
	Is the resistance less than 5 ohms? **Yes** GO to Q5. **No** REPAIR the circuit between the MAP sensor electrical connector EN8 pin 1 (BW) and ECM electrical connector EN16 pin 127 (BW). For additional information, refer to the wiring diagrams. CLEAR the DTC. TEST the system for normal operation.
Q5: CHECK THE MAP SENSOR SIGNAL WIRE FOR SHORT TO GROUND	
	1 Disconnect the ECM electrical connector EN16.
	2 Disconnect the MAP sensor electrical connector EN8.
	3 Measure the resistance between EN8 pin 1 (BW) and GROUND.
	Is the resistance less than 10,000 ohms? **Yes** REPAIR the short to GROUND. For additional information, refer to the wiring diagrams. CLEAR the DTC. TEST the system for normal operation. (The fault could be in any of the components or sensors in the 5 volt supply circuit, or the ECM) **No** GO to Q6.
Q6: CHECK THE MAP SENSOR SIGNAL WIRE FOR SHORT TO BATTERY	
	1 Connect the ECM electrical connector EN16.
	2 Turn the ignition switch to the ON position.
	3 Check for a voltage at EN8 pin 1 (BW)
	Is the voltage greater than 10 volts? **Yes** Repair the short circuit. For additional information, refer to the wiring diagrams. CLEAR the DTC. TEST the system for normal operation. (The fault could be in any of the components or sensors in the 5 volt supply circuit, or the ECM) **No** INSTALL a new MAP sensor. CLEAR the DTC. TEST the system for normal operation.

PINPOINT TEST R : P0010, P1384. VVT RIGHT-HAND BANK	
TEST CONDITIONS	**DETAILS/RESULTS/ACTIONS**
R1: CHECK THE GROUND CIRCUIT TO THE RIGHT-HAND BANK VVT SOLENOID	
	1 Disconnect the VVT solenoid electrical connector EN61.
	2 Measure the resistance between the VVT solenoid electrical connector EN61 pin 2 (BG) and GROUND.
	Is the resistance less than 5 ohms? **Yes** GO to R2. **No** REPAIR the circuit between VVT solenoid electrical connector EN61 pin 2 (BG) and GROUND. For additional information, refer to wiring diagrams. CLEAR the DTC. TEST the system for normal operation.
R2: CHECK CONTINUITY OF THE RIGHT-HAND BANK VVT SOLENOID SIGNAL WIRE	
	1 Measure the resistance between VVT solenoid electrical connector EN61 pin 1 (RW) and ECM electrical connector EN16 pin 109 (RW).
	Is the resistance less than 5 ohms? **Yes** GO to R3. **No** REPAIR the circuit between VVT solenoid electrical connector EN61 pin 1 (RW) and ECM electrical connector EN16 pin 109 (RW). For additional information, refer to wiring diagrams. CLEAR the DTC. TEST the system for normal operation.
R3: CHECK FOR SHORT TO GROUND AT THE RIGHT-HAND BANK VVT SOLENOID SIGNAL WIRE	
	1 Disconnect the ECM electrical connector EN16.
	2 Measure the resistance between EN61 pin 1 (RW) and GROUND.
	Is the resistance less than 10,000 ohms? **Yes** REPAIR the short to GROUND. For additional information, refer to wiring diagrams. CLEAR the DTC. TEST the system for normal operation. **No** GO to R4.
R4: CHECK FOR SHORT TO BATTERY AT THE RIGHT-HAND BANK VVT SOLENOID SIGNAL WIRE	
	1 TURN the ignition switch to the ON position.
	2 Check for a voltage at EN61 pin 1 (RW).

	Is the voltage greater than 1 volt? **Yes** REPAIR the short circuit. For additional information, refer to wiring diagrams. CLEAR the DTC. TEST the system for normal operation. **No** INSTALL a new right-hand bank VVT solenoid. REFER to: Variable Camshaft Timing (VCT) Oil Control Solenoid (303-14A Electronic Engine Controls - 2.0L NA V6 - AJV6/2.5L NA V6 - AJV6/3.0L NA V6 - AJ27, Removal and Installation). CLEAR the DTC. TEST the system for normal operation.

PINPOINT TEST S : P0020, P1396. VVT LEFT-HAND BANK	
TEST CONDITIONS	**DETAILS/RESULTS/ACTIONS**
S1: CHECK GROUND CIRCUIT TO THE LEFT-HAND BANK VVT SOLENOID	
	1 Disconnect the VVT solenoid electrical connector, EN42.
	2 Measure the resistance between the VVT solenoid electrical connector EN42 pin 2 (BG) and GROUND.
	Is the resistance less than 5 ohms? **Yes** GO to S2. **No** REPAIR the circuit between VVT solenoid electrical connector EN42 pin 2 (BG) and GROUND. For additional information, refer to the wiring diagrams. CLEAR the DTC. TEST the system for normal operation.
S2: CHECK CONTINUITY OF THE LEFT-HAND BANK VVT SOLENOID SIGNAL WIRE.	
	1 Measure the resistance between VVT solenoid electrical connector EN42 pin 1 (G) and ECM electrical connector EN16 pin 110 (G).
	Is the resistance less than 5 ohms? **Yes** GO to S3. **No** REPAIR the circuit between VVT solenoid electrical connector EN42 pin 1 (G) and ECM electrical connector EN16 pin 110 (G). For additional information, refer to the wiring diagrams. CLEAR the DTC. TEST the system for normal operation.
S3: CHECK FOR SHORT TO GROUND AT THE LEFT-HAND BANK VVT SOLENOID SIGNAL WIRE	
	1 Disconnect the ECM electrical connector EN16.
	2 Measure the resistance between EN61 pin 1 (RW) and GROUND.
	Is the resistance less than 10,000 ohms? **Yes** REPAIR the short to GROUND. For additional information, refer to the wiring diagrams. CLEAR the DTC. TEST the system for normal operation. **No** GO to S4.
S4: CHECK FOR SHORT TO BATTERY AT THE LEFT-HAND BANK VVT SOLENOID SIGNAL WIRE	
	1 TURN the ignition switch to the ON position.
	2 Check for a voltage at EN61 pin 1 (RW).
	Is the voltage greater than 1 volt? **Yes** REPAIR the short circuit. For additional information, refer to the wiring diagrams. CLEAR the DTC. TEST the system for normal operation. **No** INSTALL a new left-hand bank VVT solenoid. REFER to: Variable Camshaft Timing (VCT) Oil Control Solenoid (303-14A Electronic Engine Controls - 2.0L NA V6 - AJV6/2.5L NA V6 - AJV6/3.0L NA V6 - AJ27, Removal and Installation). CLEAR the DTC. TEST the system for normal operation.

PINPOINT TEST T : P1251, P1631, P1657, P1658. THROTTLE MOTOR RELAY	
TEST CONDITIONS	**DETAILS/RESULTS/ACTIONS**
T1: CHECK THE POWER SUPPLY CIRCUIT TO THE THROTTLE MOTOR RELAY	
	1 Turn the ignition switch to the ON position.
	2 Measure the voltage between pin 1 of the throttle motor relay base and GROUND.
	Is the voltage greater than 10 volts? **Yes** GO to T2. **No** REPAIR the circuit between pin 1 of the throttle motor relay base and the EMS control relay. For additional information, refer to the wiring diagrams. CLEAR the DTC. TEST the system for normal operation.
T2: CHECK CONTINUITY OF THE THROTTLE MOTOR RELAY SIGNAL WIRE	
	1 Turn the ignition switch to the OFF position.
	2 Measure the resistance between the throttle motor relay base, pin 2 and the ECM electrical connector EN16 pin 52 (GR).
	Is the resistance less than 5 ohms? **Yes** GO to T3. **No** REPAIR the circuit between the throttle motor relay base pin 2 and the ECM electrical connector EN16 pin 52 (GR). For additional information, refer to the wiring diagrams. CLEAR the DTC. TEST the system for normal operation.
T3: CHECK THE THROTTLE MOTOR RELAY SIGNAL WIRE FOR SHORT TO BATTERY	
	1 Turn the ignition switch to the OFF position.
	2 Remove the throttle motor relay.
	3 Disconnect the ECM electrical connector EN16.
	4 Check for a voltage between the throttle motor relay base pin 2 and GROUND.
	Is the voltage greater than 1 volt? **Yes** REPAIR the short to battery. For additional information, refer to wiring digrams. CLEAR the DTC. TEST the system for normal operation. **No** GO to T4.

T4: CHECK THE THROTTLE MOTOR RELAY SIGNAL WIRE FOR SHORT TO GROUND	
	1 Measure the resistance between the throttle motor relay base pin 2 and GROUND.
	Is the resistance less than 10,000 ohms? **Yes** REPAIR the short to GROUND. For additional information, refer to wiring digrams. CLEAR the DTC. TEST the system for normal operation. **No** GO to T5.
T5: CHECK CONTINUITY OF THE THROTTLE MOTOR RELAY OUTPUT WIRE	
	1 Test for continuity between throttle motor relay base pin 5 and ECM electrical connector EN16 pin 134 (RW).
	Is the circuit continuous? **Yes** INSTALL a new throttle motor relay. CLEAR the DTC. TEST the system for normal operation. If the DTC is repeated, INSTALL a new ECM. REFER to: Engine Control Module (ECM) (303-14B Electronic Engine Controls - 2.0L Duratorq-TDCi/2.2L Duratorq-TDCi (110kW/150PS) - Puma, Removal and Installation). Before replacing a ECM, contact Dealer technical support **No** REPAIR the circuit between throttle motor relay base pin 2 and ECM electrical connector EN16 pin 134 (RW). For additional information, refer to wiring diagrams. CLEAR the DTC. TEST the system for normal operation.
T6: CHECK THE THROTTLE MOTOR RELAY OUTPUT WIRE FOR SHORT TO BATTERY	
	1 Check for a voltage between the throttle motor relay base pin 5 and GROUND.
	Is the voltage greater than 1 volt? **Yes** REPAIR the short to battery. For additional information, refer to wiring digrams. CLEAR the DTC. TEST the system for normal operation. **No** GO to T7.
T7: CHECK THE THROTTLE MOTOR RELAY OUTPUT WIRE FOR SHORT TO GROUND	
	1 Measure the resistance between the throttle motor relay base pin 5 and GROUND.
	Is the resistance less than 10,000 ohms? **Yes** REPAIR the short to GROUND. For additional information, refer to wiring digrams. CLEAR the DTC. TEST the system for normal operation. **No** INSTALL a new throttle motor relay. For additional information, refer to the electrical guide. CLEAR the DTC. TEST the system for normal operation. If the DTC is repeated, INSTALL a new ECM. REFER to: Engine Control Module (ECM) (303-14B Electronic Engine Controls - 2.0L Duratorq-TDCi/2.2L Duratorq-TDCi (110kW/150PS) - Puma, Removal and Installation). Before replacing an ECM, contact dealer technical support.

PINPOINT TEST U : P1549. IMT VALVE 1	
TEST CONDITIONS	**DETAILS/RESULTS/ACTIONS**
U1: CHECK THE POWER SUPPLY CIRCUIT TO THE IMT VALVE 1	
	1 Turn the ignition switch to the ON position.
	2 Measure the voltage between IMT valve 1 electrical connector EN999 pin 1 (NG) and GROUND.
	Is the voltage greater than 10 volts? **Yes** GO to U2. **No** REPAIR the circuit between the IMT valve 1 electrical connector EN999 pin 1 (NG) and the Battery power bus 2. CLEAR the DTC. TEST the system for normal operation. (This circuit includes the power distribution fuse box and the EMS control relay. For additional information, refer to wiring diagrams)
U2: CHECK CONTINUITY OF THE IMT VALVE 1 SIGNAL WIRE.	
	1 Disconnect the ECM electrical connector EN16.
	2 Measure the resistance between the IMT valve 1 electrical connector EN999 pin 2 (OY) and the ECM electrical connector EN16 pin 38 (OY).
	Is the resistance less than 5 ohms? **Yes** GO to U3. **No** REPAIR the circuit between the IMT valve 1 electrical connector EN999 pin 2 (OY) and the ECM electrical connector EN16 pin 38 (OY). For additional information, refer to wiring diagrams. CLEAR the DTC. TEST the system for normal operation.
U3: CHECK IMT VALVE SIGNAL WIRE FOR SHORT TO GROUND	
	1 Measure the resistance between EN999 pin 2 (OY) and GROUND.
	Is the resistance less than 10,000 ohms? **Yes** REPAIR the short to GROUND. For additional information, refer to wiring digrams. CLEAR the DTC. TEST the system for normal operation. **No** GO to U4.
U4: CHECK IMT VALVE SIGNAL WIRE FOR SHORT TO BATTERY	
	1 Connect the ECM electrical connector EN16.
	2 Turn the ignition switch to the ON position.
	3 Check for a voltage at EN999 pin 2 (OY).
	Is the voltage greater than 10 volts? **Yes** REPAIR the short to battery. For additional information, refer to wiring digrams. CLEAR the DTC. TEST the system for normal operation. **No** INSTALL a new IMT valve. CLEAR the DTC. TEST the system for normal operation. If the DTC is repeated, INSTALL a new ECM. REFER to: Engine Control Module (ECM) (303-14B Electronic Engine Controls - 2.0L Duratorq-TDCi/2.2L Duratorq-TDCi (110kW/150PS) - Puma, Removal and Installation). Before replacing an ECM, contact dealer technical support. CLEAR the DTC. TEST the system for normal operation.

PINPOINT TEST V : P1532. IMT VALVE 2

TEST CONDITIONS	DETAILS/RESULTS/ACTIONS
V1: CHECK THE POWER SUPPLY CIRCUIT TO THE IMT VALVE 2	
	1 Turn the ignition switch to the ON position.
	2 Measure the voltage between IMT valve 2 electrical connector EN998 pin 1 (NG) and GROUND.
	Is the voltage greater than 10 volts? **Yes** GO to V2. **No** REPAIR the circuit between the IMT valve 2 electrical connector EN998 pin 1 (NG) and the Battery power bus 2. CLEAR the DTC. TEST the system for normal operation. (This circuit includes the power distribution fuse box and the EMS control relay. For additional information, refer to wiring diagrams)
V2: CHECK CONTINUITY OF THE IMT VALVE 2 SIGNAL WIRE	
	1 Disconnect the ECM electrical connector EN16.
	2 Measure the resistance between the IMT valve 2 electrical connector EN998 pin 2 (OY) and the ECM electrical connector EN16 pin 39 (OY).
	Is the resistance less than 5 ohms? **Yes** GO to V3. **No** REPAIR the circuit between the IMT valve 2 electrical connector EN998 pin 2 (OY)and the ECM electrical connector EN16 pin 39 (OY). For additional information, refer to wiring diagrams. CLEAR the DTC. TEST the system for normal operation.
V3: CHECK IMT VALVE SIGNAL WIRE FOR SHORT TO GROUND	
	1 Measure the resistance between EN998 pin 2 (OY) and GROUND.
	Is the resistance less than 10,000 ohms? **Yes** REPAIR the short to GROUND. For additional information, refer to wiring digrams. CLEAR the DTC. TEST the system for normal operation. **No** GO to V4.
V4: CHECK IMT VALVE SIGNAL WIRE FOR SHORT TO BATTERY	
	1 Connect the ECM electrical connector EN16.
	2 Turn the ignition switch to the ON position.
	3 Check for a voltage at EN998 pin 2 (OY).
	Is the voltage greater than 10 volts? **Yes** REPAIR the short to battery. For additional information, refer to wiring digrams. CLEAR the DTC. TEST the system for normal operation. **No** INSTALL a new IMT valve. CLEAR the DTC. TEST the system for normal operation. If the DTC is repeated, INSTALL a new ECM. REFER to: Engine Control Module (ECM) (303-14B Electronic Engine Controls - 2.0L Duratorq-TDCi/2.2L Duratorq-TDCi (110kW/150PS) - Puma, Removal and Installation). Before replacing an ECM, contact dealer technical support

PINPOINT TEST W : P1582. FLIGHT RECORDER DATA STORED

TEST CONDITIONS	DETAILS/RESULTS/ACTIONS
W1: EXTRACT THE FLIGHT RECORDER DATA	
	• NOTE: Flight recorder data can only be extracted using the Jaguar approved diagnostic system, where available. 1 Connect the Jaguar approved diagnostic system, or code reader.
	Is DTC P1582 stored? **Yes** Refer to dealer technical support for information on extracting data. **No** Test not applicable.

PINPOINT TEST X : P1240, P1241, P1242. SENSOR POWER SUPPLY

TEST CONDITIONS	DETAILS/RESULTS/ACTIONS
X1: CHECK THE POWER SUPPLY CIRCUIT TO THE IP SENSOR	
	1 Disconnect the IP sensor electrical connector, IJ7.
	2 Turn the ignition switch to the ON position.
	3 Measure the voltage between IP sensor electrical connector IJ7 pin 1 (YG) and GROUND.
	Is the voltage greater than 4 volts? **Yes** GO to X2. **No** REPAIR the circuit between the IP sensor electrical connector IJ7 pin 1 (YG) and the sensor 5 volt supply bus. CLEAR the DTC. TEST the system for normal operation. (The fault could be in any of the other sensors in this circuit, or in any of the spurs in this circuit. For additional information, refer to wiring diagrams)
X2: CHECK THE POWER SUPPLY CIRCUIT TO THE IP SENSOR FOR SHORT TO BATTERY	
	1 Measure the voltage between IP sensor electrical connector IJ7 pin 1 (YG) and GROUND.
	Is the voltage greater than 6 volts? **Yes** REPAIR the circuit between the IP sensor electrical connector IJ7 pin 1 (YG) and the sensor 5 volt supply bus. CLEAR the DTC. TEST the system for normal operation. (The short could be in any of the other sensors in this circuit, or in any of the spurs in this circuit. For additional information, refer to wiring diagrams) **No** GO to X3.
X3: CHECK THE POWER SUPPLY CIRCUIT TO THE MAP SENSOR	
	1 Disconnect the MAP sensor electrical connector EN8.
	2 Turn the ignition switch to the ON position.
	3 Measure the voltage between MAP sensor electrical connector EN8 pin 2 (OY) and GROUND.

	Is the voltage greater than 4 volts? **Yes** GO to X4. **No** REPAIR the circuit between the MAP sensor electrical connector EN8 pin 2 (OY) and the sensor 5 volt supply bus. CLEAR the DTC. TEST the system for normal operation. (The fault could be in any of the other sensors in this circuit, or in any of the spurs in this circuit. For additional information, refer to wiring diagrams)
X4: CHECK THE POWER SUPPLY CIRCUIT TO THE MAP SENSOR FOR SHORT TO BATTERY	
	1 Measure the voltage between MAP sensor electrical connector EN8 pin 2 (OY) and GROUND.
	Is the voltage greater than 6 volts? **Yes** REPAIR the circuit between the MAP sensor electrical connector EN8 pin 2 (OY) and the sensor 5 volt supply bus. CLEAR the DTC. TEST the system for normal operation. (The short could be in any of the other sensors in this circuit, or in any of the spurs in this circuit. For additional information, refer to wiring diagrams) **No** GO to X5.
X5: CHECK THE POWER SUPPLY CIRCUIT TO THE FTP SENSOR	
• NOTE: Access to the FTP sensor involves the removal of the fuel tank. To reduce the amount of work necessary, a slave harness could be used. This can be connected at the access port beneath the rear seat. Tests can then be carried out via the slave harness and sensor. If system operation is normal with the slave harness and sensor, the fault lies in the vehicle's harness or sensor.	
	1 Disconnect the FTP sensor electrical connector FT1. (See note above).
	2 Turn the ignition switch to the ON position.
	3 Measure the voltage between FTP sensor electrical connector FT1 pin 1 (OY) and GROUND.
	Is the voltage greater than 4 volts? **Yes** GO to X6. **No** REPAIR the circuit between the FTP sensor electrical connector FT1 pin 1 (OY) and the sensor 5 volt supply bus. CLEAR the DTC. TEST the system for normal operation. (The fault could be in any of the other sensors in this circuit, or in any of the spurs in this circuit. For additional information, refer to wiring diagrams)
X6: CHECK THE POWER SUPPLY CIRCUIT TO THE FTP SENSOR FOR SHORT TO BATTERY	
	1 Measure the voltage between FTP sensor electrical connector FT1 pin 1 (OY) and GROUND.
	Is the voltage greater than 6 volts? **Yes** REPAIR the circuit between the FTP sensor electrical connector FT1 pin 1 (OY) and the sensor 5 volt supply bus. CLEAR the DTC. TEST the system for normal operation. (The short could be in any of the other sensors in this circuit, or in any of the spurs in this circuit. For additional information, refer to wiring diagrams) **No** GO to X7.
X7: CHECK THE POWER SUPPLY CIRCUIT TO THE APP SENSOR	
	1 Disconnect the APP sensor electrical connector.
	2 Turn the ignition switch to the ON position.
	3 Measure the voltage between APP sensor electrical connector PA1 pin 5 (OY) and GROUND.
	Is the voltage greater than 4 volts? **Yes** GO to X8. **No** REPAIR the circuit between the APP sensor electrical connector PA1 pin 5 (OY) and the sensor 5 volt supply bus. CLEAR the DTC. TEST the system for normal operation. (The fault could be in any of the other sensors in this circuit, or in any of the spurs in this circuit. For additional information, refer to wiring diagrams)
X8: CHECK THE POWER SUPPLY CIRCUIT TO THE APP SENSOR FOR SHORT TO BATTERY	
	1 Measure the voltage between APP sensor electrical connector PA1 pin 5 (OY) and GROUND.
	Is the voltage greater than 6 volts? **Yes** REPAIR the circuit between the APP sensor electrical connector PA1 pin 5 (OY) and the sensor 5 volt supply bus. CLEAR the DTC. TEST the system for normal operation. (The short could be in any of the other sensors in this circuit, or in any of the spurs in this circuit. For additional information, refer to wiring diagrams) **No** GO to X9.
X9: CHECK THE POWER SUPPLY CIRCUIT TO THE TP SENSOR	
	1 Turn the ignition switch to the ON position.
	2 Measure the voltage between TP sensor electrical connector EN13 pin 2 (OY) and GROUND.
	Is the voltage greater than 4 volts? **Yes** GO to X10. **No** REPAIR the circuit between the TP sensor electrical connector EN13 pin 2 (OY) and the sensor 5 volt supply bus. CLEAR the DTC. TEST the system for normal operation. (The fault could be in any of the other sensors in this circuit, or in any of the spurs in this circuit. For additional information, refer to wiring diagrams)
X10: CHECK THE POWER SUPPLY CIRCUIT TO THE TP SENSOR FOR SHORT TO BATTERY	
	1 Measure the voltage between TP sensor electrical connector EN13 pin 2 (OY) and GROUND.
	Is the voltage greater than 6 volts? **Yes** REPAIR the circuit between the TP sensor electrical connector EN13 pin 2 (OY) and the sensor 5 volt supply bus. CLEAR the DTC. TEST the system for normal operation. (The short could be in any of the other sensors in this circuit, or in any of the spurs in this circuit. For additional information, refer to wiring diagrams) **No** GO to X11.
X11: CHECK THE POWER SUPPLY CIRCUIT TO THE AIR CONDITIONING PRESSURE (ACP) SENSOR	
	1 Turn the ignition switch to the ON position.
	2 Measure the voltage between ACP sensor electrical connector JB106 pin 2 (OY) and GROUND.

	Is the voltage greater than 4 volts? **Yes** GO to X12. **No** REPAIR the circuit between the ACP sensor electrical connector JB106 pin 2 (OY) and the sensor 5 volt supply bus. CLEAR the DTC. TEST the system for normal operation. (The fault could be in any of the other sensors in this circuit, or in any of the spurs in this circuit. For additional information, refer to wiring diagrams)
X12: CHECK THE POWER SUPPLY CIRCUIT TO THE AIR CONDITIONING PRESSURE SENSOR FOR SHORT TO BATTERY	
	1 Measure the voltage between ACP sensor electrical connector JB106 pin 2 (OY) and GROUND.
	Is the voltage greater than 6 volts? **Yes** REPAIR the circuit between the ACP sensor electrical connector JB106 pin 2 (OY) and the sensor 5 volt supply bus. CLEAR the DTC. TEST the system for normal operation. (The short could be in any of the other sensors in this circuit, or in any of the spurs in this circuit. For additional information, refer to wiring diagrams.) **No** No electrical fault in power supply circuit. Recheck DTCs using the Jaguar approved diagnostic system, or code reader. (This fault could also be a PSV failure within the ECM.)

PINPOINT TEST Y : P1243. SENSOR GROUND CIRCUITS.	
TEST CONDITIONS	**DETAILS/RESULTS/ACTIONS**
Y1: CHECK THE GROUND CIRCUIT TO THE ECT SENSOR	
	1 Measure the resistance between ECT sensor electrical connector EN18 pin 1 (BG) and GROUND.
	Is the resistance less than 5 ohms? **Yes** GO to Y2. **No** REPAIR the circuit between the ECT sensor electrical connector EN18 pin 1 (BG) and GROUND. CLEAR the DTC. TEST the system for normal operation. (This circuit includes the ECM. For additional information, refer to wiring diagrams)
Y2: CHECK THE GROUND CIRCUIT TO THE EOT SENSOR	
	1 Measure the resistance between EOT sensor electrical connector EN25 pin 2 (BG) and GROUND.
	Is the resistance less than 5 ohms? **Yes** GO to Y3. **No** REPAIR the circuit between the EOT sensor electrical connector EN25 pin 2 (BG) and GROUND. CLEAR the DTC. TEST the system for normal operation. (This circuit includes the ECM. For additional information, refer to wiring diagrams)
Y3: CHECK THE GROUND CIRCUIT TO THE IP SENSOR	
	1 Measure the resistance between IP sensor electrical connector IJ7 pin 2 (WG) and GROUND.
	Is the resistance less than 5 ohms? **Yes** GO to Y4. **No** REPAIR the circuit between the IP sensor electrical connector IJ7 pin 2 (WG) and GROUND. CLEAR the DTC. TEST the system for normal operation. (This circuit includes the ECM. For additional information, refer to wiring diagrams)
Y4: CHECK THE GROUND CIRCUIT TO THE EFT SENSOR	
	1 Measure the resistance between EFT sensor electrical connector IJ8 pin 1 (NU) and GROUND.
	Is the resistance less than 5 ohms? **Yes** GO to Y5. **No** REPAIR the circuit between the EFT sensor electrical connector IJ8 pin 1 (NU) and GROUND. CLEAR the DTC. TEST the system for normal operation. (This circuit includes the ECM. For additional information, refer to wiring diagrams)
Y5: CHECK THE GROUND CIRCUIT TO THE MAP SENSOR	
	1 Measure the resistance between MAP sensor electrical connector EN8 pin 4 (BG) and GROUND.
	Is the resistance less than 5 ohms? **Yes** GO to Y6. **No** REPAIR the circuit between the MAP sensor electrical connector EN8 pin 4 (BG) and GROUND. CLEAR the DTC. TEST the system for normal operation. (This circuit includes the ECM. For additional information, refer to wiring diagrams)
Y6: CHECK THE GROUND CIRCUIT TO THE FTP SENSOR	
• NOTE: Access to the FTP sensor involves the removal of the fuel tank. To reduce the amount of work necessary, a slave harness could be used. This can be connected at the access port beneath the rear seat. Tests can then be carried out via the slave harness and sensor. If system operation is normal with the slave harness and sensor, the fault lies in the vehicle's harness or sensor.	
	1 Measure the resistance between FTP sensor electrical connector FT1 pin 3 (BG) and GROUND.
	Is the resistance less than 5 ohms? **Yes** GO to Y7. **No** REPAIR the circuit between the FTP Sensor electrical connector FT1 pin 3 (BG) and GROUND. CLEAR the DTC. TEST the system for normal operation. (This circuit includes the ECM. For additional information, refer to wiring diagrams)
Y7: CHECK THE GROUND CIRCUIT TO THE APP SENSOR (TRACK 1)	
	1 Measure the resistance between APP sensor electrical connector PA1 pin 3 (BG) and GROUND.

	Is the resistance less than 5 ohms? **Yes** GO to Y8. **No** REPAIR the circuit between the APP sensor electrical connector PA1 pin 3 (BG) and GROUND. CLEAR the DTC. TEST the system for normal operation. (This circuit includes the ECM. For additional information, refer to wiring diagrams)
Y8: CHECK THE GROUND CIRCUIT TO THE TP SENSOR	
	1 Measure the resistance between TP sensor electrical connector EN13 pin 1 (BG) and GROUND.
	Is the resistance less than 5 ohms? **Yes** GO to Y9. **No** REPAIR the circuit between the TP sensor electrical connector EN13 pin 1 (BG) and GROUND. CLEAR the DTC. TEST the system for normal operation. (This circuit includes the ECM. For additional information, refer to wiring diagrams)
Y9: CHECK THE GROUND CIRCUIT TO THE APP SENSOR (TRACK 3)	
	1 Measure the resistance between APP sensor electrical connector PA1 pin 6 (BG) and GROUND.
	Is the resistance less than 5 ohms? **Yes** GO to Y10. **No** REPAIR the circuit between the APP sensor electrical connector PA1 pin 6 (BG) and GROUND. CLEAR the DTC. TEST the system for normal operation. (This circuit includes the ECM. For additional information, refer to wiring diagrams)
Y10: CHECK THE GROUND CIRCUIT TO THE AIR CONDITIONING PRESSURE SENSOR	
	1 Measure the resistance between ACP sensor electrical connector JB106 pin 1 (BG) and GROUND.
	Is the resistance less than 5 ohms? **Yes** No electrical fault in ground circuit. Recheck DTCs. **No** REPAIR the circuit between the ACP sensor electrical connector JB106 pin 1 (BG) and GROUND. CLEAR the DTC. TEST the system for normal operation. (This circuit includes the ECM. For additional information, refer to wiring diagrams)

PINPOINT TEST Z : P1122, P1123, P1344. APP SENSOR (TRACK 1)	
TEST CONDITIONS	**DETAILS/RESULTS/ACTIONS**
Z1: CHECK THE POWER SUPPLY CIRCUIT TO THE APP SENSOR. TRACK 1	
	1 Turn the ignition switch to the ON position.
	2 Measure the voltage between APP sensor electrical connector PA1 pin 2 (Y) and GROUND.
	Is the voltage greater than 4volts? **Yes** GO to Z2. **No** REPAIR the circuit between the APP sensor electrical connector PA1 pin 2 (Y) and the sensor 5 volt supply 2. CLEAR the DTC. TEST the system for normal operation. (This circuit includes the ECM, EMS control relay, and power distribution fuse box. For additional information, refer to wiring diagrams)
Z2: CHECK THE GROUND CIRCUIT TO THE APP SENSOR	
	1 Turn the ignition switch to the OFF position.
	2 Disconnect APP Sensor electrical connector PA1.
	3 Measure the resistance between APP sensor electrical connector PA1 pin 6 (BG) and GROUND.
	Is the resistance less than 5 ohms? **Yes** GO to Z5. **No** REPAIR the circuit between the APP sensor electrical connector PA1 pin 6 (BG) and GROUND. CLEAR the DTC. TEST the system for normal operation. (This circuit includes the ECM. For additional information, refer to wiring diagrams)
Z3: CHECK THE GROUND CIRCUIT TO THE APP SENSOR. FOR CONTINUITY	
	1 Disconnect the ECM electrical connector EN16.
	2 Disconnect the APP sensor electrical connector PA1.
	3 Measure the resistance between EN16 pin 20 (BG) and PA1 pin 6 (BG).
	Is the resistance less than 5 ohms? **Yes** GO to Z4. **No** REPAIR the circuit. For additional information, refer to wiring diagrams. CLEAR the DTC. TEST the system for normal operation.
Z4: CHECK THE GROUND CIRCUIT TO THE APP SENSOR. FOR SHORT TO BATTERY	
	1 Connect the ECM electrical connector EN16.
	2 Turn the ignition switch to the ON position.
	3 Check for a voltage at PA1 pin 6 (BG).
	Is the voltage greater than 1 volt? **Yes** REPAIR the short circuit. For additional information, refer to wiring diagrams. CLEAR the DTC. TEST the system for normal operation. **No** GO to Z5.
Z5: CHECK CONTINUITY OF THE APP SENSOR SIGNAL WIRE	
	1 Turn the ignition switch to the OFF position.
	2 Disconnect the APP sensor electrical connector PA1.
	3 Measure the resistance between APP sensor electrical connector PA1 pin 4 (R) and the ECM electrical connector EN16 pin 102 (R).

	Is the resistance less than 5 ohms? **Yes** GO to Z6. **No** REPAIR the circuit between the APP sensor electrical connector PA1 pin 4 (R) and the ECM electrical connector EN16 pin 102 (R). For additional information, refer to wiring diagrams. CLEAR the DTC. TEST the system for normal operation.
Z6: CHECK CONTINUITY OF THE APP SENSOR POTENTIOMETER	
	1 Measure the resistance between APP sensor electrical connector PA1 pins 4 and 6.
	2 Operate the accelerator pedal through it's full range while observing the resistance reading.
	Does the resistance vary as the pedal is operated? **Yes** INSTALL a new ECM. REFER to: Engine Control Module (ECM) (303-14B Electronic Engine Controls - 2.0L Duratorq-TDCi/2.2L Duratorq-TDCi (110kW/150PS) - Puma, Removal and Installation). Before replacing an ECM, contact dealer technical support. **No** INSTALL a new accelerator pedal position sensor, REFER to: Accelerator Pedal (310-02 Acceleration Control, Removal and Installation). CLEAR the DTC. TEST the system for normal operation.

PINPOINT TEST AA : P1215, P1216, P1344. APP SENSOR (TRACK 3)	
TEST CONDITIONS	**DETAILS/RESULTS/ACTIONS**
AA1: CHECK THE POWER SUPPLY CIRCUIT TO THE APP SENSOR. TRACK 3	
	1 Turn the ignition switch to the ON position.
	2 Measure the voltage between APP sensor electrical connector PA1 pin 1(Y) and GROUND.
	Is the voltage greater than 4 volts? **Yes** GO to AA2. **No** REPAIR the circuit between the APP sensor electrical connector PA1 pin 1 (Y) and the sensor 5 volt supply. CLEAR the DTC. TEST the system for normal operation. (This circuit includes the ECM, EMS control relay, and power distribution fuse box. For additional information, refer to wiring diagrams. This supply is also linked to other sensors. The fault could be in any of these or their wiring.)
AA2: CHECK THE GROUND CIRCUIT TO THE APP SENSOR	
	1 Turn the ignition switch to the OFF position.
	2 Disconnect the APP sensor electrical connector PA1.
	3 Measure the resistance between APP sensor electrical connector PA1 pin 3 (BG) and GROUND.
	Is the resistance less than 5 ohms? **Yes** GO to AA5. **No** REPAIR the circuit between the APP sensor electrical connector PA1 pin 3 (BG) and GROUND. CLEAR the DTC. TEST the system for normal operation. (This circuit includes the ECM. For additional information, refer to wiring diagrams.)
AA3: CHECK THE GROUND CIRCUIT TO THE APP SENSOR FOR CONTINUITY	
	1 Disconnect the ECM electrical connector EN16.
	2 Disconnect the APP sensor electrical connector PA1.
	3 Measure the resistance between EN16 pin 19 (BG) and PA1 pin 3 (BG).
	Is the resistance less than 5 ohms? **Yes** GO to AA4. **No** REPAIR the circuit. For additional information, refer to wiring diagrams. CLEAR the DTC. TEST the system for normal operation.
AA4: CHECK THE GROUND CIRCUIT TO THE APP SENSOR FOR SHORT TO BATTERY	
	1 Connect the ECM electrical connector EN16.
	2 Turn the ignition switch to the ON position.
	3 Check for a voltage at PA1 pin 3 (BG).
	Is the voltage greater than 1 volt? **Yes** REPAIR the short circuit. For additional information, refer to wiring diagrams. CLEAR the DTC. TEST the system for normal operation. **No** GO to AA5.
AA5: CHECK CONTINUITY OF THE APP SENSOR SIGNAL WIRE	
	1 Measure the resistance between APP sensor electrical connector PA1 pin 1 (Y) and the ECM electrical connector EN16 pin 103 (Y).
	Is the resistance less than 5 ohms? **Yes** GO to AA6. **No** REPAIR the circuit between the APP sensor electrical connector PA1 pin 1 (Y) and the ECM electrical connector EN16 pin 103 (Y). For additional information, refer to wiring diagrams. CLEAR the DTC. TEST the system for normal operation.
AA6: CHECK CONTINUITY OF THE APP SENSOR POTENTIOMETER	
	1 Measure the resistance between APP sensor electrical connector PA1 pins 1and 3.
	2 Operate the accelerator pedal through it's full range while observing the resistance reading.
	Does the resistance vary as the pedal is operated? **Yes** INSTALL a new ECM. REFER to: Engine Control Module (ECM) (303-14B Electronic Engine Controls - 2.0L Duratorq-TDCi/2.2L Duratorq-TDCi (110kW/150PS) - Puma, Removal and Installation). Before replacing a ECM, contact Dealer technical support. **No** INSTALL a new accelerator pedal position sensor,

	REFER to: Accelerator Pedal (310-02 Acceleration Control, Removal and Installation). CLEAR the DTC. TEST the system for normal operation.

PINPOINT TEST AB : P0480. RADIATOR COOLING FAN MODULE DRIVE	
TEST CONDITIONS	**DETAILS/RESULTS/ACTIONS**
AB1: CHECK THE PULSE WIDTH MODULATED SIGNAL TO THE COOLING FAN MODULE	
	1 Disconnect the radiator cooling fan module electrical connector PWM1.
	2 RUN the engine to a temperature at which the cooling fans would operate.
	3 Using a suitable meter, test for a pulse width modulated signal at PWM1 pin 3 (WU).
	Is a PWM signal present? **Yes** INSTALL a new cooling fan module. CLEAR the DTC. TEST the system for normal operation. **No** GO to AB2.
AB2: CHECK CONTINUITY OF THE RADIATOR COOLING FAN MODULE SIGNAL WIRE	
	1 Turn the ignition switch to the OFF position.
	2 Disconnect the ECM electrical connector EN16.
	3 Measure the resistance between the radiator cooling fan module electrical connector PWM1 pin 3 (WU) and the ECM electrical connector EN16 pin 51 (WU).
	Is the resistance less than 5 ohms? **Yes** INSTALL a new ECM. REFER to: Engine Control Module (ECM) (303-14B Electronic Engine Controls - 2.0L Duratorq-TDCi/2.2L Duratorq-TDCi (110kW/150PS) - Puma, Removal and Installation). Before replacing an ECM, contact dealer technical support. **No** REPAIR the circuit between the radiator cooling fan module electrical connector PWM1 pin 3 (WU) and the ECM electrical connector EN16 pin 51 (WU). For additional information, refer to wiring diagrams. CLEAR the DTC. TEST the system for normal operation.

PINPOINT TEST AC : P0646, P0647. AIR CONDITIONING CLUTCH RELAY DRIVE	
TEST CONDITIONS	**DETAILS/RESULTS/ACTIONS**
AC1: CHECK THE GROUND SUPPLY TO THE AIR CONDITIONING CLUTCH	
WARNING: This test involves working in proximity to rotating parts. Make sure due care is exercised.	
	1 Turn the ignition switch to the ON position.
	2 Disconnect the ECM electrical connector EN16.
	3 Disconnect the air conditioning clutch electrical connector EN30.
	4 Measure the resistance between EN30 pin 2 (B) and GROUND.
	Is the resistance less than 5 ohms? **Yes** REPAIR the circuit between EN30 pin 2 (B) and GROUND. For additional information, refer to wiring diagrams. CLEAR the DTC. TEST the system for normal operation. **No** GO to AC2.
AC2: CHECK THE CIRCUIT INTEGRITY BETWEEN THE ECM AND THE AIR CONDITIONING CLUTCH	
	1 Apply a GROUND to the disconnected ECM electrical connector EN16 pin 34 (BG).
	2 Measure the voltage at air conditioning clutch electrical connector EN30 pin 1 (RG).
	Is the voltage greater than 10 volts? **Yes** GO to AC3. **No** GO to AC4.
AC3: CHECK THE AIR CONDITIONING CLUTCH RELAY TO ECM CIRCUIT FOR SHORT TO GROUND	
	1 Measure the resistance between EN16 pin 34 (BG) and GROUND.
	Is the resistance less than 10,000 ohms? **Yes** GO to AC4. **No** INSTALL a new air conditioning compressor clutch relay. For additional information, refer to the electrical guide. CLEAR the DTC. TEST the system for normal operation. If the DTC is repeated, INSTALL a new ECM. REFER to: Engine Control Module (ECM) (303-14B Electronic Engine Controls - 2.0L Duratorq-TDCi/2.2L Duratorq-TDCi (110kW/150PS) - Puma, Removal and Installation). Before replacing an ECM, contact dealer technical support.
AC4: CHECK THE CIRCUIT BETWEEN THE AIR CONDITIONING COMPRESSOR CLUTCH AND THE RELAY FOR SHORT TO BATTERY	
	1 Measure the voltage between EN30 pin 1 (RG) and GROUND.
	Is the voltage greater than 1 volt? **Yes** REPAIR the short circuit. For additional information, refer to wiring diagrams. CLEAR the DTC. TEST the system for normal operation. **No** GO to AC5.
AC5: CHECK THE CIRCUIT BETWEEN THE AIR CONDITIONING COMPRESSOR CLUTCH AND THE ACCC RELAY FOR SHORT TO GROUND	
	1 Measure the resistance between EN30 pin 1 (RG) and GROUND.
	Is the resistance less than 10,000 ohms? **Yes** REPAIR the short circuit. For additional information, refer to wiring diagrams. CLEAR the DTC. TEST the system for normal operation. **No** GO to AC6.
AC6: CHECK THE CIRCUIT BETWEEN FUSE 23 OF THE POWER DISTRIBUTION FUSE BOX AND THE ACCC RELAY FOR SHORT TO GROUND	
	1 Remove Fuse 23.

	2 Measure the resistance between fuse box electrical connector JB34 pin 79 and GROUND.
	Is the resistance less than 10,000 ohms? **Yes** REPAIR the short circuit. For additional information, refer to wiring diagrams. CLEAR the DTC. TEST the system for normal operation. **No** GO to AC7.
AC7: CHECK THE ACCC RELAY BASE FOR BATTERY VOLTAGE AT PIN 3	
	1 Refit Fuse 23.
	2 Measure the voltage between the ACCC relay base pin 3 and GROUND.
	Is the voltage greater than 10 volts? **Yes** GO to AC8. **No** Check/replace fuses. REPAIR the circuit between the relay base and the battery power bus 1. For additional information, refer to wiring diagrams. CLEAR the DTC. TEST the system for normal operation.
AC8: CHECK THE CIRCUIT BETWEEN PIN 1 OF THE ACCC RELAY BASE AND THE POWER DISTRIBUTION FUSE BOX FOR SHORT TO GROUND	
	1 Remove Fuse 36.
	2 Measure the resistance between the ACCC relay base pin 1 and GROUND.
	Is the resistance less than 10,000 ohms? **Yes** REPAIR the short circuit. For additional information, refer to wiring diagrams. CLEAR the DTC. TEST the system for normal operation. **No** GO to AC9.
AC9: CHECK THE ACCC RELAY BASE FOR BATTERY VOLTAGE AT PIN 1	
	1 Refit Fuse 36.
	2 Turn the ignition switch to the ON position.
	3 Measure the voltage between ACCC relay base pin 1 and GROUND.
	Is the voltage greater than 10 volts? **Yes** GO to AC10. **No** Check/replace fuses. REPAIR the circuit between the relay base and the battery power bus 2. For additional information, refer to wiring diagrams. CLEAR the DTC. TEST the system for normal operation. (This circuit includes the EMS relay, and Fuses 9 and 31)
AC10: CHECK THE CIRCUIT BETWEEN THE ECM AND THE ACCC RELAY BASE FOR CONTINUITY	
	1 Remove the ACCC relay.
	2 Measure the resistance between the ECM electrical connector EN16 pin 34 (BG) and ACCC relay base pin 2.
	Is the resistance less than 5 ohms? **Yes** GO to AC11. **No** REPAIR the circuit. For additional information, refer to wiring diagrams. CLEAR the DTC. TEST the system for normal operation.
AC11: CHECK THE CIRCUIT BETWEEN THE ECM AND THE ACCC RELAY BASE FOR SHORT TO BATTERY	
	1 Check for a voltage between the ECM electrical connector EN16 pin 34 (BG) and GROUND.
	Is the voltage greater than 1 volt? **Yes** REPAIR the short circuit. For additional information, refer to wiring diagrams. CLEAR the DTC. TEST the system for normal operation. **No** GO to AC12.
AC12: CHECK THE CIRCUIT BETWEEN THE ECM AND THE ACCC RELAY BASE FOR SHORT TO GROUND	
	1 Measure the resistance between the ECM electrical connector EN16 pin 34 (BG) and GROUND.
	Is the resistance less than 10,000 ohms? **Yes** REPAIR the short circuit. For additional information, refer to wiring diagrams. CLEAR the DTC. TEST the system for normal operation. **No** INSTALL a new ACCC relay. For additional information, refer to the electrical guide. CLEAR the DTC. TEST the system for normal operation.

PINPOINT TEST AD : P1516, P1517. P/N SWITCH STARTING/DRIVING MALFUNCTIONS.

TEST CONDITIONS	DETAILS/RESULTS/ACTIONS
AD1: CHECK THE P/N INPUT TO THE ECM.	
	1 Select PARK.
	2 Set the ignition switch to the ON position.
	3 Measure the voltage at the ECM electrical connector EN16 pin 31 (B).
	Is the voltage greater than 10 volts? **Yes** INSTALL a new ECM. REFER to: Engine Control Module (ECM) (303-14B Electronic Engine Controls - 2.0L Duratorq-TDCi/2.2L Duratorq-TDCi (110kW/150PS) - Puma, Removal and Installation). Before replacing a ECM, contact Dealer technical support. **No** REPAIR the circuit between the ECM electrical connector EN16 pin 31 (B) and the ignition switch. For additional information, refer to wiring diagrams. CLEAR the DTC. TEST the system for normal operation. (On automatic transmission vehicles, this circuit includes the TR sensor, central junction fuse box, ignition relay, and inertia switch. On NAS manual transmission vehicles, this circuit also includes the clutch safety switch.)

PINPOINT TEST AE : P1245; P1246. IGNITION SWITCH CRANK SIGNAL

WARNING: Make sure the starter motor does not engage in the course of these tests. Failure to follow these instructions may result in personal injury.

TEST CONDITIONS	DETAILS/RESULTS/ACTIONS
AE1: CHECK THE START INPUT TO THE ECM	
	1 Move the gear selector to the N position.
	2 Disconnect the ECM electrical connector EN16.
	3 Remove the starter relay from the power distribution fuse box.
	4 Turn the ignition switch to the CRANK position.
	5 Measure the voltage between EN16 pin 6 (Y) and GROUND.
	Is the voltage greater than 10 volts? **Yes** GO to AE2. **No** REPAIR the circuit between the ECM and the battery. For additional information, refer to wiring diagrams. CLEAR the DTC. TEST the system for normal operation. (This circuit includes the ignition switch and the power distribution fuse box. [Fuse 28].)
AE2: CHECK THE START INPUT TO THE STARTER RELAY	
	1 Turn the ignition switch to the START position and hold.
	2 Measure the voltage between the starter relay base (R10) pin 1 and GROUND.
	Is the voltage greater than 10 volts? **Yes** GO to AE3. **No** REPAIR the circuit between the starter relay base and the battery. For additional information, refer to wiring diagrams. CLEAR the DTC. TEST the system for normal operation. (This circuit includes the ignition switch and the power distribution fuse box)
AE3: CHECK THE START INPUT WIRE FOR SHORT TO BATTERY AT ECM	
	1 Turn the ignition switch to the ON position.
	2 Measure the voltage between EN16 pin 6 (Y) and GROUND.
	Is the voltage greater than 10 volts? **Yes** REPAIR the short circuit. For additional information, refer to wiring diagrams. CLEAR the DTC. TEST the system for normal operation. **No** GO to AE4.
AE4: CHECK THE START INPUT WIRE FOR SHORT TO BATTERY AT RELAY	
	1 Turn the ignition switch to the ON position.
	2 Measure the voltage between the starter relay base pin 1 and GROUND.
	Is the voltage greater than 10 volts? **Yes** REPAIR the short circuit. For additional information, refer to wiring diagrams. CLEAR the DTC. TEST the system for normal operation. **No** GO to AE5.
AE5: CHECK THE STARTER RELAY INPUT FROM THE ECM FOR CONTINUITY	
	1 Measure the resistance between EN16 pin 41 (GO) and relay base pin 2.
	Is the resistance less than 5 ohms? **Yes** GO to AE6. **No** REPAIR the open circuit. For additional information, refer to wiring diagrams. CLEAR the DTC. TEST the system for normal operation.
AE6: CHECK THE STARTER RELAY INPUT FROM THE ECM FOR SHORT TO GROUND	
	1 Disconnect ignition switch electrical connector IP18.
	2 Measure the resistance between EN16 pin 41 (GO) and GROUND.
	Is the resistance less than 10,000 ohms? **Yes** REPAIR the short circuit. For additional information, refer to wiring diagrams. CLEAR the DTC. TEST the system for normal operation. **No** GO to AE7.
AE7: CHECK THE STARTER RELAY INPUT FROM THE ECM FOR SHORT TO BATTERY	
	1 Measure the voltage between the starter relay base pin 2 and GROUND.
	Is the voltage greater than 1 volt? **Yes** REPAIR the short circuit. For additional information, refer to wiring diagrams. CLEAR the DTC. TEST the system for normal operation. **No** INSTALL a new starter relay. For additional information, refer to wiring diagrams. CLEAR the DTC. TEST the system for normal operation. If the DTC is repeated, INSTALL a new ECM. REFER to: Engine Control Module (ECM) (303-14B Electronic Engine Controls - 2.0L Duratorq-TDCi/2.2L Duratorq-TDCi (110kW/150PS) - Puma, Removal and Installation). Before replacing an ECM, contact dealer technical support.

Electronic Engine Controls - 2.0L NA V6 - AJV6 / 2.5L NA V6 - AJV6 / 3.0L NA V6 - AJ27 - Electronic Engine Controls2.5L NA V6 - AJV6 / 3.0L NA V6 - AJ27, VIN Range: J28493->V99999

Diagnosis and Testing

1. **1.** Verify the customer concern by operating the system.
2. **2.** Visually inspect for obvious signs of mechanical and electrical damage.

Visual Inspection Chart

Mechanical	Electrical
• Engine oil level • Cooling system coolant level • Fuel Contamination • Throttle body	• Fuses (9, 31, 32, 37) • Wiring harness • Electrical connector(s) • Sensor(s) • Engine control module (ECM)

3. **3.** Verify the following systems are working correctly:

- Air intake system
- Cooling system
- Charging system
- Fuel charging system

4. **4.** If an obvious cause for an observed or reported concern is found, correct the cause (if possible) before proceeding to the next step.
5. **5.** If the concern is not visually evident and the Jaguar Approved Diagnostic System is not available, use a fault code reader to retrieve the fault codes before proceeding to the Diagnostic Trouble Code (DTCs) Index Chart.
6. **6.** Make sure that a power supply is present to the ECM from fuse 32 of the engine compartment fuse box before carrying out diagnostic work on the electronic engine control system.

Diagnostic Trouble Code (DTC) Index

DTC	Description	Possible Source	Action
P0116, P0117, P0118, P0125	Concern with engine coolant temperature (ECT) sensor.	• ECT sensor. • ECT sensor circuit(s). • Low/contaminated coolant. • Thermostat failure. • Overheating.	GO to Pinpoint Test A. .
P0128	Concern with engine temperature, set by ECT sensor inputs.	• Thermostat. • ECT sensor. • ECT sensor circuit(s).	Mechanical check of thermostat.GO to Pinpoint Test A. .
P0335, P0336	Concern with crankshaft position (CKP) sensor.	• CKP sensor. • CKP sensor circuit(s). • CKP sensor air gap. • CKP sensor debris.	GO to Pinpoint Test B. .
P0011, P0012, P0340, P0341	Concern with right-hand bank camshaft position (CMP) sensor. Right-hand camshaft position timing over-advanced/over-retarded.	• CMP sensor. • CMP sensor circuit(s). • CMP sensor air gap. • CMP sensor debris.	GO to Pinpoint Test C. .
P0021, P0022, P1340, P1341	Concern with left-hand bank camshaft position (CMP) sensor. Left-hand camshaft position timing over-advanced/over-retarded.	• CMP sensor. • CMP sensor circuit(s). • CMP sensor air gap. • CMP sensor debris.	GO to Pinpoint Test D. .
P0031, P0032	Concern with right-hand bank heated oxygen sensor (HO2S 1/1) heater.	• H02S 1/1 failure. • H02S 1/1 circuit(s). • Fuse 38.	GO to Pinpoint Test E. .
P0181, P0182, P0183	Concern with fuel temperature sensor.	• Fuel temperature sensor. • Fuel temperature sensor circuit(s).	GO to Pinpoint Test F. ..
P0324, P0327, P0328, P0332, P0333	Concern with knock sensor (KS).	• KS. • KS circuit(s). • Poor contact with cylinder block. • ECM failure.	GO to Pinpoint Test G. .
P0197, P0198, P0196	Concern with oil temperature sensor.	• Oil temperature sensor. • Oil temperature sensor circuit(s).	GO to Pinpoint Test H. .
P0131, P0132	Concern with right-hand bank heated oxygen sensor (HO2S 1/1).	• HO2S 1/1. • HO2S 1/1 circuit(s).	GO to Pinpoint Test I. .
P0133	Concern with right-hand bank heated oxygen sensor (HO2S 1/1). Slow response.	• Engine misfire. • H02S 1/1 disconnected. • H02S 1/1 mechanical damage. • H02S 1/1 to ECM wiring fault. • H02S 1/1 short circuit to	GO to Pinpoint Test I. Refer to pinpoint tests for components listed, REFER to: Exhaust System (309-00 Exhaust System, Diagnosis and Testing) / Fuel Charging and Controls - 2.5L NA V6 - AJV6/3.0L NA V6 - AJ27, VIN Range: E96603->J28492 (303-04A Fuel Charging and Controls - 2.0L NA V6 - AJV6/2.5L NA V6 -

DTC	Description	Possible Source	Action
		ground. • H02S 1/1 wiring shield open circuit. • H02S 1/1 heater circuit fault. • Exhaust leak. • Low exhaust temperature. • Injector flow partially blocked. • Catalyst efficiency decrease. • H02S 1/1 failure.	AJV6/3.0L NA V6 - AJ27, Diagnosis and Testing).
P1646	Concern with right-hand bank heated oxygen sensor (HO2S 1/1).	• H02S 1/1 heater failure. • H02S 1/1 sensing circuit, short circuit to ground. • H02S 1/1 sensing circuit, short circuit to high voltage. • H02S 1/1 sensing circuit, open circuit. • ECM failure.	GO to Pinpoint Test I. Refer to pinpoint tests for components listed.
P0037, P0038, P0137, P0138	Concern with right-hand bank catalyst monitor sensor (H02S ½).	• H02S ½. • H02S ½ circuit(s). • Fuse 38.	GO to Pinpoint Test J. .
P0139, P0140	Concern with right-hand bank catalyst monitor sensor (H02S ½).	• H02S ½. • H02S ½ circuit(s). • Exhaust leak. • Low exhaust temperature. • Injector flow partially blocked.	GO to Pinpoint Test J. Inspect exhaust system, REFER to: Exhaust System (309-00 Exhaust System, Diagnosis and Testing). Inspect fuel system, REFER to: Fuel Charging and Controls - 2.5L NA V6 - AJV6/3.0L NA V6 - AJ27, VIN Range: E96603->J28492 (303-04A Fuel Charging and Controls - 2.0L NA V6 - AJV6/2.5L NA V6 - AJV6/3.0L NA V6 - AJ27, Diagnosis and Testing).
P0151, P0152	Concern with left-hand bank heated oxygen sensor (HO2S 2/1).	• HO2S 2/1. • HO2S 2/1 circuit(s).	GO to Pinpoint Test K. .
P0153	Concern with left-hand bank heated oxygen sensor (HO2S 2/1). Slow response.	• Engine misfire. • H02S 2/1 disconnected. • H02S 2/1 mechanical damage. • H02S 2/1 to ECM wiring fault. • H02S 2/1 short circuit to ground. • H02S 2/1 wiring shield open circuit. • H02S 2/1 heater circuit fault. • Exhaust leak. • Low exhaust temperature. • Injector flow partially blocked. • Catalyst efficiency decrease. • H02S 2/1 failure.	GO to Pinpoint Test K. Refer to pinpoint tests for components listed, REFER to: Exhaust System (309-00 Exhaust System, Diagnosis and Testing) / Fuel Charging and Controls - 2.5L NA V6 - AJV6/3.0L NA V6 - AJ27, VIN Range: E96603->J28492 (303-04A Fuel Charging and Controls - 2.0L NA V6 - AJV6/2.5L NA V6 - AJV6/3.0L NA V6 - AJ27, Diagnosis and Testing).
P1647	Concern with left-hand bank heated oxygen sensor (HO2S 2/1).	• H02S 2/1 heater failure. • H02S 2/1 sensing circuit, short circuit to ground. • H02S 2/1 sensing circuit, short circuit to high voltage. • H02S 2/1 sensing circuit, open circuit. • ECM failure.	GO to Pinpoint Test K. Refer to pinpoint tests for components listed.
P0057, P0058, P0157, P0158	Concern with left-hand bank catalyst monitor sensor (HO2S 2/2).	• HO2S 2/2. • HO2S 2/2 sensor circuit(s). • Fuse 42.	GO to Pinpoint Test L. .
P0159, P0160	Concern with left-hand bank catalyst monitor sensor (HO2S 2/2).	• H02S 2/2. • H02S 2/2 circuit(s). • Exhaust leak. • Low exhaust temperature. • Injector flow partially blocked.	GO to Pinpoint Test L. Inspect exhaust system, REFER to: Exhaust System (309-00 Exhaust System, Diagnosis and Testing). Inspect fuel system, REFER to: Fuel Charging and Controls - 2.5L NA V6 - AJV6/3.0L NA V6 - AJ27, VIN Range: E96603->J28492 (303-04A Fuel Charging and Controls - 2.0L NA V6 - AJV6/2.5L NA V6 - AJV6/3.0L NA V6 - AJ27, Diagnosis and Testing). .
P0420	Concern with right-hand bank catalytic converter system. (Efficiency below threshold).	• HO2 sensor disconnected. • HO2 sensor to ECM wiring fault. • HO2 sensor heater to ECM wiring fault. • HO2 sensor heater failure.	Refer to pinpoint tests for components listed. Visually inspect catalytic converters. REFER to: Exhaust System (309-00 Exhaust System, Diagnosis and Testing).

DTC	Description	Possible Source	Action
		• Upstream HO2 sensor failure. • Downstream HO2 sensor failure. • HO2 sensor failed. • Catalytic converter failure.	
P0430	Concern with left-hand bank catalytic converter system. (Efficiency below threshold).	• HO2 sensor disconnected. • HO2 sensor to ECM wiring fault. • HO2 sensor heater to ECM wiring fault. • HO2 sensor heater failure. • Upstream HO2 sensor failure. • Downstream HO2 sensor failure. • HO2 sensor failed. • Catalytic converter failure.	Refer to pinpoint tests for components listed. Visually inspect catalytic converters, REFER to: Exhaust System (309-00 Exhaust System, Diagnosis and Testing).
P0101, P0102	Concern with mass air flow (MAF) sensor.	• MAF sensor. • MAF sensor circuit(s). • Blocked air filter. • Air intake leak. • Engine breather leak. • Throttle control malfunction.	GO to Pinpoint Test M. Visually inspect components listed, REFER to: Intake Air Distribution and Filtering (303-12A Intake Air Distribution and Filtering - 2.0L NA V6 - AJV6/2.5L NA V6 - AJV6/3.0L NA V6 - AJ27, Diagnosis and Testing) / Fuel Charging and Controls - 2.5L NA V6 - AJV6/3.0L NA V6 - AJ27, VIN Range: E96603->J28492 (303-04A Fuel Charging and Controls - 2.0L NA V6 - AJV6/2.5L NA V6 - AJV6/3.0L NA V6 - AJ27, Diagnosis and Testing).
P0103, P1104	Concern with mass air flow (MAF) sensor.	• MAF sensor. • MAF sensor circuit(s).	GO to Pinpoint Test M. .
P0111	Concern with the intake air temperature (IAT) sensor.	• MAF sensor. • MAF sensor circuit(s). • Blocked air filter. • Air intake leak. • Engine breather leak.	GO to Pinpoint Test N. Visually inspect components listed. REFER to: Intake Air Distribution and Filtering (303-12A Intake Air Distribution and Filtering - 2.0L NA V6 - AJV6/2.5L NA V6 - AJV6/3.0L NA V6 - AJ27, Diagnosis and Testing).
P0112, P0113	Concern with the intake air temperature (IAT) sensor.	• Intake air temperature (IAT) sensor. • Intake air temperature (IAT)sensor circuit.	GO to Pinpoint Test N. .
P0051, P0052	Concern with the left-hand bank heated oxygen sensor (HO2S 2/1) heater.	• HO2S 2/1. • HO2S 2/1 circuit. • Fuse 42.	GO to Pinpoint Test O. .
P1606	Concern with ECM relay.	• ECM. • ECM relay. • ECM relay circuit(s). • Fuse 31.	GO to Pinpoint Test P. .
P0106, P0107, P0108	Concern with MAP sensor.	• MAP sensor. • MAP sensor circuits.	GO to Pinpoint Test Q. .
P0069, P2228, P2229	Concern with barometric pressure (HAC) sensor.	Barometric pressure sensor within the ECM.	INSTALL a new ECM. For additional information, refer to, dealer technical support.
P0010, P1384	Concern with VVT circuit, right-hand bank.	• VVT solenoid and circuit. • Oil flow. • Camshaft failure.	GO to Pinpoint Test R. REFER to: Variable Camshaft Timing (VCT) Oil Control Solenoid (303-14A Electronic Engine Controls - 2.0L NA V6 - AJV6/2.5L NA V6 - AJV6/3.0L NA V6 - AJ27, Removal and Installation).
P0020, P1396	Concern with VVT circuit, left-hand bank.	• VVT solenoid and circuit. • Oil flow. • Camshaft failure.	GO to Pinpoint Test S. REFER to: Variable Camshaft Timing (VCT) Oil Control Solenoid (303-14A Electronic Engine Controls - 2.0L NA V6 - AJV6/2.5L NA V6 - AJV6/3.0L NA V6 - AJ27, Removal and Installation).
P1251, P1631, P1657, P1658	Concern with throttle motor relay.	• Throttle motor relay. • Throttle motor relay circuit.	GO to Pinpoint Test T. Check Fuse 18.
P1549	Concern with IMT Valve 1 circuit.	• IMT valve. • IMT valve circuit.	GO to Pinpoint Test U.
P1532	Concern with IMT Valve 2 circuit.	• IMT valve. • IMT valve circuit.	GO to Pinpoint Test V. .
P1582	"Flight Recorder" data stored.	This code does not indicate a failure of a component or system.	GO to Pinpoint Test W. .
P0561, P0562, P0563	Concern with sensor power circuit.	• ECM. • Power supply circuits. • Sensors within the circuit.	GO to Pinpoint Test AC. .
P1243	Concern with sensor ground circuit.	• ECM. • Sensor ground circuits. • Sensors within the circuit.	GO to Pinpoint Test X. .

DTC	Description	Possible Source	Action
P0226, P00227, P0228	Concern with accelerator pedal position sensor; Track 1.	• APP sensor. • APP sensor circuits.	GO to Pinpoint Test Z. .
P2122, P2123	Concern with accelerator pedal position sensor; Track 3.	• APP sensor. • APP sensor circuits.	GO to Pinpoint Test AA. .
P0480	Concern with radiator cooling fan module drive.	• Cooling fan module. • Cooling fan module circuits.	GO to Pinpoint Test Y. .
P0646, P0647	Concern with air conditioning clutch relay drive.	• Air conditioning clutch relay. • Air conditioning clutch relay circuits.	GO to Pinpoint Test AE. .
P0851, P0852	Concern with P/N switch starting/driving malfunctions.	• CJFB. • Ignition relay. • TR sensor. • Inertia switch and circuits.	GO to Pinpoint Test AD. .
P0512, P1245	Concern with engine crank signal, high/low voltage.	• Starter relay. • ECM. • Ignition switch. • Associated circuits.	GO to Pinpoint Test AB. .
P1260	Security input malfunction.	• GEM. • Ignition key. • PATS circuits. • CAN network.	Reprogram key, check CAN network, REFER to: Communications Network - VIN Range: E96603->J28492 (418-00 Module Communications Network, Diagnosis and Testing).
P0506	Cold start monitor engine speed low.	• Air intake restriction. • Accessory drive overload. (defective/seized component). • Throttle valve stuck closed. • Throttle body failure.	REFER to: Intake Air Distribution and Filtering (303-12A Intake Air Distribution and Filtering - 2.0L NA V6 - AJV6/2.5L NA V6 - AJV6/3.0L NA V6 - AJ27, Diagnosis and Testing) / Accessory Drive (303-05 Accessory Drive, Diagnosis and Testing) / Fuel Charging and Controls - 2.5L NA V6 - AJV6/3.0L NA V6 - AJ27, VIN Range: E96603->J28492 (303-04A Fuel Charging and Controls - 2.0L NA V6 - AJV6/2.5L NA V6 - AJV6/3.0L NA V6 - AJ27, Diagnosis and Testing).
P0507	Cold start monitor engine speed high.	• Intake air leak between MAF sensor and throttle. • Intake air leak between throttle and engine. • Engine crankcase breather leak.	REFER to: Intake Air Distribution and Filtering (303-12A Intake Air Distribution and Filtering - 2.0L NA V6 - AJV6/2.5L NA V6 - AJV6/3.0L NA V6 - AJ27, Diagnosis and Testing).
P050A	Cold start monitor airflow low/high.	• Air intake restriction. • Accessory drive overload. (defective/seized component). • Throttle valve stuck closed. • Throttle body failure. • Intake air leak between MAF sensor and throttle. • Intake air leak between throttle and engine. • Engine crankcase breather leak.	REFER to: Intake Air Distribution and Filtering (303-12A Intake Air Distribution and Filtering - 2.0L NA V6 - AJV6/2.5L NA V6 - AJV6/3.0L NA V6 - AJ27, Diagnosis and Testing) / Accessory Drive (303-05 Accessory Drive, Diagnosis and Testing) / Fuel Charging and Controls - 2.5L NA V6 - AJV6/3.0L NA V6 - AJ27, VIN Range: E96603->J28492 (303-04A Fuel Charging and Controls - 2.0L NA V6 - AJV6/2.5L NA V6 - AJV6/3.0L NA V6 - AJ27, Diagnosis and Testing).
P050B	Cold start ignition timing performance.	• Blocked intake system. • Sticking/slow throttle. • Poor engine condition.	Check the intake air system, including the air cleaner element. Carry out a complete vehicle read for related DTCs. Rectify as necessary.
P0603, P0607, P1633, P1656	Concern with powertrain control module (ECM).	ECM.	INSTALL a new ECM. For additional information, refer to dealer technical support.
P0171, P0172, P0174, P0175, P0201, P0202, P0203, P0204, P0205, P0206	Concern with fuel system too lean/rich.	• Fuel injector(s). • Fuel delivery fault.	REFER to: Fuel Charging and Controls - 2.5L NA V6 - AJV6/3.0L NA V6 - AJ27, VIN Range: E96603->J28492 (303-04A Fuel Charging and Controls - 2.0L NA V6 - AJV6/2.5L NA V6 - AJV6/3.0L NA V6 - AJ27, Diagnosis and Testing).
P0300, P0301, P0302, P0303, P0304, P0305, P0306, P1313, P1314, P1316	Concern with ignition system/misfire monitoring.	• Ignition system. • Ignition system wiring harness.	REFER to: Engine Ignition - 2.5L NA V6 - AJV6/3.0L NA V6 - AJ27 (303-07A Engine Ignition - 2.0L NA V6 - AJV6/2.5L NA V6 - AJV6/3.0L NA V6 - AJ27, Diagnosis and Testing).
P0351, P0352, P0353, P0354, P0355, P0356	Concern with ignition primary circuits.	• Ignition modules. • Ignition module circuits.	REFER to: Engine Ignition - 2.5L NA V6 - AJV6/3.0L NA V6 - AJ27 (303-07A Engine Ignition - 2.0L NA V6 - AJV6/2.5L NA V6 - AJV6/3.0L NA V6 - AJ27, Diagnosis and Testing).
P0442, P0443, P0444, P0445, P0446, P0447, P0448, P0450, P0452, P0453, P0455, P0456, P0457	Concern with evaporative emissions system.	• Evaporative/purge valve and circuits. • Fuel tank and lines. • Filler cap. • Carbon canister. • Canister close valve and circuits. • Fuel tank pressure sensor. • Fuel tank vapor port.	REFER to: Intake Air Distribution and Filtering (303-12A Intake Air Distribution and Filtering - 2.0L NA V6 - AJV6/2.5L NA V6 - AJV6/3.0L NA V6 - AJ27, Diagnosis and Testing).

DTC	Description	Possible Source	Action
		• Vapor lines.	
P0460	Concern with fuel level sensors.	• Fuel level sensors. • Fuel level sensor circuits. • Instrument cluster.	REFER to: Fuel Charging and Controls - 2.5L NA V6 - AJV6/3.0L NA V6 - AJ27, VIN Range: E96603->J28492 (303-04A Fuel Charging and Controls - 2.0L NA V6 - AJV6/2.5L NA V6 - AJV6/3.0L NA V6 - AJ27, Diagnosis and Testing).
P0560	ECM battery power supply voltage malfunction. (This DTC could be set due to a fuel injection pressure sensor fault. If P0193 is also set, rectify P0193 first).	ECM battery power supply circuit open circuit or high resistance.	Repair the circuit. For additional information, refer to wiring diagrams. CLEAR the DTC. TEST the system for normal operation.
P0565, P0566, P0567, P0568, P0569, P0570, P0831, P0832, P0834, P0835, P1571	Concern with vehicle speed control.	• Switchpack. • Switchpack circuits. • Clutch cancel switch. • Clutch safety switch. • Brake on/off switch.	REFER to: Speed Control - 2.5L NA V6 - AJV6/3.0L NA V6 - AJ27 (310-03 Speed Control, Diagnosis and Testing).
P0616, P0617	Concern with the starter relay circuit.	• Starter relay. • Starter relay drive circuit.	REFER to: Starting System - 2.5L NA V6 - AJV6/3.0L NA V6 - AJ27 (303-06 Starting System, Diagnosis and Testing).
P1250, P1254,	Concern with throttle body.	• Throttle motor. • Throttle motor relay. • Throttle motor relay circuits. • Throttle body. • Throttle return spring. • Limp-home spring.	REFER to: Fuel Charging and Controls - 2.5L NA V6 - AJV6/3.0L NA V6 - AJ27, VIN Range: E96603->J28492 (303-04A Fuel Charging and Controls - 2.0L NA V6 - AJV6/2.5L NA V6 - AJV6/3.0L NA V6 - AJ27, Diagnosis and Testing).
P2107	Concern with throttle body control.	ECM	REFER to: Fuel Charging and Controls - 2.5L NA V6 - AJV6/3.0L NA V6 - AJ27, VIN Range: E96603->J28492 (303-04A Fuel Charging and Controls - 2.0L NA V6 - AJV6/2.5L NA V6 - AJV6/3.0L NA V6 - AJ27, Diagnosis and Testing).
P2118, P2119	Concern with throttle body.	• Throttle actuator control motor circuit: short circuit to power. • Throttle actuator control motor circuit: short circuit to ground. • Throttle actuator control motor circuit: short circuit to power. • Throttle actuator control motor fault. • Throttle body contaminated/sticking.	REFER to: Fuel Charging and Controls - 2.5L NA V6 - AJV6/3.0L NA V6 - AJ27, VIN Range: E96603->J28492 (303-04A Fuel Charging and Controls - 2.0L NA V6 - AJV6/2.5L NA V6 - AJV6/3.0L NA V6 - AJ27, Diagnosis and Testing).
P0627, P0628, P0629, P2635	Concern with fuel pump commands.	• Fuel pump control module. • Fuel pump control module circuits. • ECM.	REFER to: Fuel Charging and Controls - 2.5L NA V6 - AJV6/3.0L NA V6 - AJ27, VIN Range: E96603->J28492 (303-04A Fuel Charging and Controls - 2.0L NA V6 - AJV6/2.5L NA V6 - AJV6/3.0L NA V6 - AJ27, Diagnosis and Testing).
P1244, P1629, P1632, P1146, P2503, P2504	Concern with charging system.	• Charging system. • Charging system wiring harness.	REFER to: Charging System - 2.0L NA V6 - AJV6/2.5L NA V6 - AJV6/3.0L NA V6 - AJ27 (414-00 Battery and Charging System - General Information, Diagnosis and Testing).
P0191, P0192, P0193	Concern with fuel pulse damper.	• fuel pulse damper circuit(s). • fuel pulse damper. • Fuel system leak/blockage.	REFER to: Fuel Charging and Controls - 2.5L NA V6 - AJV6/3.0L NA V6 - AJ27, VIN Range: E96603->J28492 (303-04A Fuel Charging and Controls - 2.0L NA V6 - AJV6/2.5L NA V6 - AJV6/3.0L NA V6 - AJ27, Diagnosis and Testing).
P0122, P0123, P0222, P0223, P2135	Concern with throttle position (TP) sensor.	• TP sensor. • TP sensor circuit(s).	REFER to: Throttle Position (TP) Sensor (303-14A Electronic Engine Controls - 2.0L NA V6 - AJV6/2.5L NA V6 - AJV6/3.0L NA V6 - AJ27, Removal and Installation).
P1000	System check not complete since last memory clear.	OBD errors not cleared by diagnosis.	Carry out comprehensive component monitor drive cycle. Refer to the DTC section of GTR, accessed by the icon on the opening page.
P1111	System check complete since last memory clear.	This code does not indicate a failure of a component or system.	No action necessary.
P1367	Concern with right-hand bank ignition amplifier.	• Ignition module. • Ignition module circuits.	REFER to: Engine Ignition - 2.5L NA V6 - AJV6/3.0L NA V6 - AJ27 (303-07A Engine Ignition - 2.0L NA V6 - AJV6/2.5L NA V6 - AJV6/3.0L NA V6 - AJ27, Diagnosis and Testing).
P1368	Concern with left-hand bank ignition amplifier.	• Ignition module. • Ignition module circuits.	REFER to: Engine Ignition - 2.5L NA V6 - AJV6/3.0L NA V6 - AJ27 (303-07A Engine Ignition - 2.0L NA V6 - AJV6/2.5L NA V6 - AJV6/3.0L NA V6 - AJ27, Diagnosis and Testing).
P1656	Concern with TP sensor amplifier circuit.	ECM.	INSTALL a new ECM. For additional information, refer to, dealer technical support.
P1609	CPU to CPU communications.	ECM.	INSTALL a new ECM. For additional information, refer to, dealer technical support.
P2610	ECM/PCM internal engine off timer performance.	ECM.	INSTALL a new ECM. For additional information, refer to, dealer technical support.

DTC	Description	Possible Source	Action
P0860, P1637, P1638. P1642, P1643, P1699	Concern with CAN network.	CAN network modules and circuits.	REFER to: Communications Network - VIN Range: E96603->J28492 (418-00 Module Communications Network, Diagnosis and Testing).

PINPOINT TEST A : DTC P0116, P0117, P0118, P0125. ECT SENSOR	
TEST CONDITIONS	**DETAILS/RESULTS/ACTIONS**
A1: CHECK THE ENGINE COOLANT TEMPERATURE (ECT) SENSOR SIGNAL WIRE FOR OPEN CIRCUIT	
	1 Turn the ignition switch to the OFF position.
	2 Disconnect the ECT sensor electrical connector EN18.
	3 Disconnect the ECM electrical connector, EN16.
	4 Measure the resistance between the ECT sensor electrical connector EN18, pin 2 (UY) and the ECM electrical connector EN16, pin 70 (UY).
	Is the resistance less than 5 ohms? **Yes** GO to A2. **No** REPAIR the circuit. For additional information, refer to the wiring diagrams. CLEAR the DTCs. TEST the system for normal operation.
A2: CHECK THE ECT SENSOR SIGNAL WIRE FOR A SHORT TO GROUND	
	1 Measure the resistance between the ECT sensor electrical connector EN18, pin 2 (UY) and EN16, pin 19.
	Is the resistance less than 10,000 ohms? **Yes** REPAIR the short to GROUND. For additional information, refer to the wiring diagrams. CLEAR the DTCs. TEST the system for normal operation. **No** GO to A3.
A3: CHECK THE ECT SENSOR GROUND CIRCUIT	
	1 Measure the resistance between the ECT sensor electrical connector EN18, pin 1 (BG) and EN16, pin 19.
	Is the resistance less than 5 ohms? **Yes** GO to A4. **No** REPAIR the circuit. For additional information, refer to the wiring diagrams. CLEAR the DTCs. TEST the system for normal operation.
A4: CHECK THE ECT SENSOR GROUND CIRCUIT FOR A SHORT TO BATTERY POSITIVE	
	1 Turn the ignition switch to the ON position.
	2 Measure the voltage between the ECT electrical connector EN18, pin 1 (BG) and GROUND.
	Is the voltage greater than 1 volt? **Yes** REPAIR the short to battery. For additional information, refer to the wiring diagrams. CLEAR the DTCs. TEST the system for normal operation. **No** GO to A5.
A5: CHECK THE ECT SENSOR CIRCUIT FOR A SHORT TO BATTERY POSITIVE	
	1 Connect the ECM electrical connector EN16.
	2 Turn the ignition switch to the ON position.
	3 Measure the voltage between the ECT sensor electrical connector EN18, pin 2 (UY) and GROUND.
	Is the voltage greater than 5 volts? **Yes** REPAIR the short to battery. For additional information, refer to the wiring diagrams. CLEAR the DTCs. TEST the system for normal operation. **No** INSTALL a new ECT sensor. CLEAR the DTCs. TEST the system for normal operation. If the DTC is repeated, INSTALL a new ECM. REFER to: Engine Control Module (ECM) (303-14B Electronic Engine Controls - 2.0L Duratorq-TDCi/2.2L Duratorq-TDCi (110kW/150PS) - Puma, Removal and Installation). Before replacing an ECM, contact dealer technical support.

PINPOINT TEST B : DTC P0335, P0336. CRANKSHAFT POSITION (CKP) SENSOR	
TEST CONDITIONS	**DETAILS/RESULTS/ACTIONS**
B1: CHECK THE CKP SENSOR FOR CORRECT INSTALLATION	
	1 Turn the ignition switch to the OFF position.
	2 Check the CKP sensor for correct installation.
	Is the CKP sensor correctly installed? **Yes** GO to B2. **No** INSTALL the CKP sensor correctly. REFER to: Crankshaft Position (CKP) Sensor (303-14A Electronic Engine Controls - 2.0L NA V6 - AJV6/2.5L NA V6 - AJV6/3.0L NA V6 - AJ27, Removal and Installation). Reconnect the sensor. CLEAR the DTCs. TEST the system for normal operation.
B2: CHECK THE CKP SENSOR FOR DEBRIS	
	1 Remove the CKP sensor and inspect for debris.
	Is the CKP sensor free of debris? **Yes** GO to B3. **No** CLEAN the sensor and wheel. INSTALL the sensor. REFER to: Crankshaft Position (CKP) Sensor (303-14A Electronic Engine Controls - 2.0L NA V6 - AJV6/2.5L NA V6 - AJV6/3.0L NA V6 - AJ27, Removal and Installation). Reconnect the sensor. CLEAR the DTCs. TEST the system for normal operation.
B3: CHECK THE CKP SENSOR GROUND WIRE FOR OPEN CIRCUIT	
	1 Disconnect the ECM electrical connector EN16.
	2 Disconnect the CKP sensor electrical connector EN12.

	3 Measure the resistance between the CKP sensor electrical connector EN12, pin 1 (Y) and the ECM electrical connector EN16, pin 37 (Y).
	Is the resistance less than 5 ohms? **Yes** GO to B4. **No** REPAIR the circuit. For additional information, refer to the wiring diagrams. Reconnect all connectors. CLEAR the DTCs. TEST the system for normal operation.
B4: CHECK THE CKP SENSOR SIGNAL WIRE FOR OPEN CIRCUIT	
	1 Measure the resistance between the CKP sensor electrical connector EN12, pin 2 (P) and the ECM electrical connector EN16, pin 36 (P).
	Is the resistance less than 5 ohms? **Yes** GO to B5. **No** REPAIR the circuit. For additional information, refer to the wiring diagrams. Reconnect all connectors. CLEAR the DTCs. TEST the system for normal operation.
B5: CHECK THE CKP SENSOR GROUND WIRE FOR A SHORT TO GROUND	
	1 Measure the resistance between the CKP sensor electrical connector EN12 pin 1 (Y) and GROUND.
	Is the resistance less than 10,000 ohms? **Yes** REPAIR the short to GROUND. For additional information, refer to the wiring diagrams. Reconnect all connectors. CLEAR the DTCs. TEST the system for normal operation. **No** GO to B6.
B6: CHECK THE CKP SENSOR SIGNAL WIRE FOR A SHORT TO GROUND	
	1 Measure the resistance between the CKP sensor electrical connector EN12 pin 2 (P) and GROUND.
	Is the resistance less than 10,000 ohms? **Yes** REPAIR the short to GROUND. For additional information, refer to the wiring diagrams. Reconnect all connectors. CLEAR the DTCs. TEST the system for normal operation. **No** GO to B7.
B7: CHECK THE CKP SENSOR GROUND WIRE FOR A SHORT TO BATTERY	
	1 Turn the ignition switch to the ON position.
	2 Measure the voltage between the CKP sensor electrical connector EN12 pin 1 (Y) and GROUND.
	Is the voltage greater than 1 volt? **Yes** REPAIR the short to battery. For additional information, refer to the wiring diagrams. Reconnect all connectors. CLEAR the DTCs. TEST the system for normal operation. **No** GO to B8.
B8: CHECK THE CKP SENSOR SIGNAL WIRE FOR A SHORT TO BATTERY	
	1 Turn the ignition switch to the ON position.
	2 Measure the voltage between the CKP sensor electrical connector EN12 pin 2 (P) and GROUND.
	Is the voltage greater than 1 volt? **Yes** REPAIR the short to battery. For additional information, refer to the wiring diagrams. Reconnect all connectors. CLEAR the DTCs. TEST the system for normal operation. **No** INSTALL a new CKP sensor. REFER to: Crankshaft Position (CKP) Sensor (303-14A Electronic Engine Controls - 2.0L NA V6 - AJV6/2.5L NA V6 - AJV6/3.0L NA V6 - AJ27, Removal and Installation). Reconnect all connectors. CLEAR the DTCs. TEST the system for normal operation. If the concern persists INSTALL a new ECM. REFER to: Engine Control Module (ECM) (303-14B Electronic Engine Controls - 2.0L Duratorq-TDCi/2.2L Duratorq-TDCi (110kW/150PS) - Puma, Removal and Installation). Before replacing an ECM, contact dealer technical support.

PINPOINT TEST C : DTC P0011, P0012, P0340, P0341: RIGHT-HAND BANK CAMSHAFT POSITION (CMP) SENSOR

TEST CONDITIONS	DETAILS/RESULTS/ACTIONS
C1: CHECK THE RIGHT-HAND BANK CMP SENSOR FOR CORRECT INSTALLATION	
	1 Turn the ignition switch to the OFF position.
	2 Check the CMP sensor for correct installation.
	Is the CMP sensor correctly installed? **Yes** GO to C2. **No** INSTALL the CMP sensor correctly. REFER to: Camshaft Position (CMP) Sensor (303-14A Electronic Engine Controls - 2.0L NA V6 - AJV6/2.5L NA V6 - AJV6/3.0L NA V6 - AJ27, Removal and Installation). CLEAR the DTCs. TEST the system for normal operation.
C2: CHECK THE RIGHT-HAND BANK CMP SENSOR FOR FOREIGN DEBRIS	
	1 Remove the CMP sensor and inspect for foreign debris.
	Is the CMP sensor free of foreign debris? **Yes** GO to C3. **No** CLEAN the sensor and wheel. INSTALL the sensor. REFER to: Camshaft Position (CMP) Sensor (303-14A Electronic Engine Controls - 2.0L NA V6 - AJV6/2.5L NA V6 - AJV6/3.0L NA V6 - AJ27, Removal and Installation). CLEAR the DTCs. TEST the system for normal operation.
C3: CHECK THE RIGHT-HAND BANK CMP SENSOR SIGNAL WIRE FOR OPEN CIRCUIT	
	1 Disconnect the ECM electrical connector EN16.
	2 Disconnect the CMP sensor electrical connector EN43.
	3 Measure the resistance between the CMP sensor electrical connector EN43, pin 1 (O) and the ECM electrical connector EN16, pin 94 (O).

	Is the resistance less than 5 ohms? **Yes** GO to C4. **No** REPAIR the circuit. For additional information, refer to the wiring diagrams. CLEAR the DTCs. TEST the system for normal operation.
C4: CHECK THE RIGHT-HAND BANK CMP GROUND WIRE FOR OPEN CIRCUIT	
	1 Measure the resistance between the CMP sensor electrical connector EN43, pin 2 (B) and the ECM electrical connector EN16, pin 95 (B).
	Is the resistance less than 5 ohms? **Yes** GO to C5. **No** REPAIR the circuit. For additional information, refer to the wiring diagrams. CLEAR the DTCs. TEST the system for normal operation.
C5: CHECK THE RIGHT-HAND BANK CMP SENSOR SIGNAL CIRCUIT FOR A SHORT TO GROUND	
	1 Measure the resistance between the CMP sensor electrical connector EN43, pin 1 (O) and GROUND.
	Is the resistance less than 10,000 ohms? **Yes** REPAIR the short to GROUND. For additional information, refer to the wiring diagrams. CLEAR the DTCs. TEST the system for normal operation. **No** GO to C6.
C6: CHECK THE RIGHT-HAND BANK CMP SENSOR GROUND CIRCUIT FOR A SHORT TO GROUND	
	1 Measure the resistance between the CMP sensor electrical connector EN43, pin 2 (B) and GROUND.
	Is the resistance less than 10,000 ohms? **Yes** REPAIR the short to GROUND. For additional information, refer to the wiring diagrams. CLEAR the DTCs. TEST the system for normal operation. **No** GO to C7.
C7: CHECK THE RIGHT-HAND BANK CMP SENSOR SIGNAL CIRCUIT FOR A SHORT TO BATTERY	
	1 Turn the ignition switch to the ON position.
	2 Measure the voltage between the CMP sensor electrical connector EN43, pin 1 (O) and GROUND.
	Is the voltage greater than 1 volt? **Yes** REPAIR the short to battery. For additional information, refer to the wiring diagrams. CLEAR the DTCs. TEST the system for normal operation. **No** GO to C8.
C8: CHECK THE RIGHT-HAND BANK CMP SENSOR GROUND CIRCUIT FOR A SHORT TO BATTERY	
	1 Turn the ignition switch to the ON position.
	2 Measure the voltage between the CMP sensor electrical connector EN43, pin 2 (B) and GROUND.
	Is the voltage greater than 1 volt? **Yes** REPAIR the short to battery. For additional information, refer to the wiring diagrams. CLEAR the DTCs. TEST the system for normal operation. **No** INSTALL a new CMP sensor. REFER to: Camshaft Position (CMP) Sensor (303-14A Electronic Engine Controls - 2.0L NA V6 - AJV6/2.5L NA V6 - AJV6/3.0L NA V6 - AJ27, Removal and Installation). CLEAR the DTCs. TEST the system for normal operation. If the DTC is repeated, INSTALL a new ECM. REFER to: Engine Control Module (ECM) (303-14A Electronic Engine Controls - 2.0L NA V6 - AJV6/2.5L NA V6 - AJV6/3.0L NA V6 - AJ27, Removal and Installation). Before replacing an ECM, contact dealer technical support.

PINPOINT TEST D : DTC P0021, P0022, P1340, P1341: LEFT-HAND BANK CAMSHAFT POSITION (CMP) SENSOR

TEST CONDITIONS	DETAILS/RESULTS/ACTIONS
D1: CHECK THE LEFT-HAND BANK CMP SENSOR FOR CORRECT INSTALLATION	
	1 Turn the ignition switch to the OFF position.
	2 Check the CMP sensor for correct installation.
	Is the CMP sensor correctly installed? **Yes** GO to D2. **No** INSTALL the CMP sensor correctly. REFER to: Camshaft Position (CMP) Sensor (303-14A Electronic Engine Controls - 2.0L NA V6 - AJV6/2.5L NA V6 - AJV6/3.0L NA V6 - AJ27, Removal and Installation). CLEAR the DTCs. TEST the system for normal operation.
D2: CHECK THE LEFT-HAND BANK CMP SENSOR FOR FOREIGN DEBRIS	
	1 Remove the CMP sensor and inspect for foreign debris.
	Is the CMP sensor free of foreign debris? **Yes** GO to D3. **No** CLEAN the sensor and wheel. INSTALL the sensor. REFER to: Camshaft Position (CMP) Sensor (303-14A Electronic Engine Controls - 2.0L NA V6 - AJV6/2.5L NA V6 - AJV6/3.0L NA V6 - AJ27, Removal and Installation). CLEAR the DTCs. TEST the system for normal operation.
D3: CHECK THE LEFT-HAND BANK CMP SENSOR SIGNAL WIRE FOR OPEN CIRCUIT	
	1 Disconnect the ECM electrical connector EN16.
	2 Disconnect the CMP sensor electrical connector EN33.
	3 Measure the resistance between the CMP sensor electrical connector EN33, pin 1 (G) and the ECM electrical connector EN16, pin 68 (G).

	Is the resistance less than 5 ohms? **Yes** GO to D4. **No** REPAIR the circuit. For additional information, refer to the wiring diagrams. CLEAR the DTCs. TEST the system for normal operation.
D4: CHECK THE LEFT-HAND BANK CMP GROUND WIRE FOR OPEN CIRCUIT	
	1 Measure the resistance between the CMP sensor electrical connector EN33, pin 2 (N) and the ECM electrical connector EN16, pin 69 (N).
	Is the resistance less than 5 ohms? **Yes** GO to D5. **No** REPAIR the circuit. For additional information, refer to the wiring diagrams. CLEAR the DTCs. TEST the system for normal operation.
D5: CHECK THE LEFT-HAND BANK CMP SENSOR SIGNAL CIRCUIT FOR A SHORT TO GROUND	
	1 Measure the resistance between the CMP sensor electrical connector EN33, pin 1 (G) and GROUND.
	Is the resistance less than 10,000 ohms? **Yes** REPAIR the short to GROUND. For additional information, refer to the wiring diagrams. CLEAR the DTCs. TEST the system for normal operation. **No** GO to D6.
D6: CHECK THE LEFT-HAND BANK CMP SENSOR GROUND CIRCUIT FOR A SHORT TO GROUND	
	1 Disconnect the ECM electrical connector, EN16.
	2 Measure the resistance between the CMP sensor electrical connector EN33, pin 2 (N) and GROUND.
	Is the resistance less than 10,000 ohms? **Yes** REPAIR the short to GROUND. For additional information, refer to the wiring diagrams. CLEAR the DTCs. TEST the system for normal operation. **No** GO to D7.
D7: CHECK THE LEFT-HAND BANK CMP SENSOR SIGNAL CIRCUIT FOR A SHORT TO BATTERY	
	1 Turn the ignition switch to the ON position.
	2 Measure the voltage between the CMP sensor electrical connector EN33, pin 1 (G) and GROUND.
	Is the voltage greater than 1 volt? **Yes** REPAIR the short to battery. For additional information, refer to the wiring diagrams. CLEAR the DTCs. TEST the system for normal operation. **No** GO to D8.
D8: CHECK THE LEFT-HAND BANK CMP SENSOR GROUND CIRCUIT FOR A SHORT TO BATTERY	
	1 Turn the ignition switch to the ON position.
	2 Measure the voltage between the CMP sensor electrical connector EN33, pin 2 (N) and GROUND.
	Is the voltage greater than 1 volt? **Yes** REPAIR the short to battery. For additional information, refer to the wiring diagrams. CLEAR the DTCs. TEST the system for normal operation. **No** INSTALL a new CMP sensor. REFER to: Camshaft Position (CMP) Sensor (303-14A Electronic Engine Controls - 2.0L NA V6 - AJV6/2.5L NA V6 - AJV6/3.0L NA V6 - AJ27, Removal and Installation). CLEAR the DTCs. TEST the system for normal operation. If the DTC is repeated, INSTALL a new ECM. REFER to: Engine Control Module (ECM) (303-14A Electronic Engine Controls - 2.0L NA V6 - AJV6/2.5L NA V6 - AJV6/3.0L NA V6 - AJ27, Removal and Installation). Before replacing an ECM, contact dealer technical support.

PINPOINT TEST E : DTC P0031, P0032. RIGHT-HAND BANK HO2S HEATER	
TEST CONDITIONS	**DETAILS/RESULTS/ACTIONS**
E1: CHECK THE POWER SUPPLY CIRCUIT TO THE RIGHT-HAND BANK HO2S HEATER	
	1 Disconnect HO2S sensor electrical connector, EN37.
	2 Turn the ignition switch to the ON position.
	3 Measure the voltage between the HO2S electrical connector EN37, pin 2 (WG) and GROUND.
	Is the voltage less than 10 volts? **Yes** GO to E5. **No** GO to E2.
E2: CHECK THE GROUND CIRCUIT TO THE RIGHT-HAND BANK HO2S HEATER FOR OPEN CIRCUIT	
	1 Turn the ignition switch to the OFF position.
	2 Disconnect the ECM electrical connector EN16.
	3 Measure the resistance between the HO2S electrical connector EN37, pin 1 (RU) and the ECM electrical connector EN16, pin 1 and pin 2 (RU).
	Is the resistance of each wire less than 5 ohms? **Yes** GO to E3. **No** REPAIR the circuit. For additional information, refer to the wiring diagrams. CLEAR the DTCs. TEST the system for normal operation.
E3: CHECK THE RIGHT-HAND BANK HO2S GROUND CIRCUIT FOR SHORT TO GROUND	
	1 Measure the resistance between the bank 1 HO2S electrical connector EN37, pin 1 (RU) and GROUND.
	Is the resistance less than 10,000 ohms? **Yes** REPAIR the short to GROUND. For additional information, refer to the wiring diagrams. CLEAR the DTCs. TEST the system for normal operation. **No**

	GO to E4.
E4: CHECK THE RIGHT-HAND BANK HO2S GROUND CIRCUIT FOR SHORT TO BATTERY	
	1 Check for a voltage between the HO2S electrical connector EN37, pin 1 (RU) and GROUND.
	Is the voltage greater than 1 volt? **Yes** REPAIR the short to battery. For additional information, refer to the wiring diagrams. CLEAR the DTCs. TEST the system for normal operation. **No** INSTALL a new HO2S. REFER to: Heated Oxygen Sensor (HO2S) RH (303-14A Electronic Engine Controls - 2.0L NA V6 - AJV6/2.5L NA V6 - AJV6/3.0L NA V6 - AJ27, Removal and Installation). CLEAR the DTCs. TEST the system for normal operation. If the DTC is repeated, INSTALL a new ECM. REFER to: Engine Control Module (ECM) (303-14A Electronic Engine Controls - 2.0L NA V6 - AJV6/2.5L NA V6 - AJV6/3.0L NA V6 - AJ27, Removal and Installation). Before replacing an ECM, contact dealer technical support.
E5: CHECK FUSE 38 OF THE ENGINE COMPARTMENT FUSE BOX	
	1 Check the fuse.
	Is the fuse OK? **Yes** GO to E7. **No** GO to E6.
E6: CHECK FUSE 38 OF THE ENGINE COMPARTMENT FUSE BOX FOR A SHORT TO GROUND	
	1 Measure the resistance between electrical connector JB34 pin 97 of the engine compartment fuse box and GROUND.
	Is the resistance less than 10,000 ohms? **Yes** REPAIR short to ground between the engine compartment fuse box and the right-hand bank HO2S. For additional information, refer to the wiring diagrams. CLEAR the DTC. TEST the system for normal operation. **No** INSTALL a new fuse. CLEAR the DTC. TEST the system for normal operation.
E7: CHECK THE POWER SUPPLY TO FUSE 38 IN THE ENGINE COMPARTMENT FUSE BOX	
	1 Turn the ignition switch to the ON position.
	2 Measure the voltage between electrical connector JB34 pin 131 and GROUND.
	Is the voltage less than 10 volts? **Yes** Repair the circuit between the battery and the EMS relay. Test the relay, renew as necessary. CLEAR the DTC. TEST the system for normal operation. **No** Repair the circuit from the ECM control relay to the engine compartment fuse box. For additional information, refer to the wiring diagrams. GO to P1. CLEAR the DTC. TEST the system for normal operation.

PINPOINT TEST F : DTC P0181, P0182, P0183. FUEL TEMPERATURE SENSOR

TEST CONDITIONS	DETAILS/RESULTS/ACTIONS
F1: CHECK CONTINUITY OF THE FUEL TEMPERATURE SENSOR POWER SUPPLY CIRCUIT	
	1 Turn the ignition switch to the OFF position.
	2 Disconnect the fuel temperature sensor electrical connector IJ8.
	3 Disconnect the ECM electrical connector EN16.
	4 Measure the resistance between the fuel temperature sensor electrical connector IJ8, pin 2 (WU) and the ECM electrical connector EN16, pin 50 (WU).
	Is the resistance less than 5 ohms? **Yes** GO to F2. **No** REPAIR the circuit. For additional information, refer to the wiring diagrams. CLEAR the DTCs. TEST the system for normal operation.
F2: CHECK THE FUEL TEMPERATURE SENSOR GROUND CIRCUIT	
	1 Measure the resistance between the fuel temperature sensor electrical connector IJ8 pin 1 (NU) and GROUND.
	Is the resistance less than 5 ohms? **Yes** GO to F3. **No** REPAIR the circuit. For additional information, refer to the wiring diagrams. CLEAR the DTCs. TEST the system for normal operation.
F3: CHECK THE FUEL TEMPERATURE SENSOR CIRCUIT FOR A SHORT TO GROUND	
	1 Measure the resistance between the fuel temperature sensor electrical connector IJ8 pin 2 (WU) and GROUND.
	Is the resistance less than 10,000 ohms? **Yes** REPAIR the short to GROUND. For additional information, refer to the wiring diagrams. CLEAR the DTCs. TEST the system for normal operation. **No** GO to F4.
F4: CHECK THE FUEL TEMPERATURE SENSOR GROUND CIRCUIT FOR A SHORT TO BATTERY	
	1 Disconnect the FTP sensor electrical connector, FT1.
	2 Turn the ignition switch to the ON position.
	3 Check for a voltage between FT1, pin 3 (BG) and GROUND.
	Is the voltage greater than 1 volt? **Yes** REPAIR the short to battery. For additional information, refer to the wiring diagrams. CLEAR the DTCs. TEST the system for normal operation. **No** GO to F5.
F5: CHECK THE FUEL TEMPERATURE SENSOR CIRCUIT FOR A SHORT TO BATTERY	
	1 Connect the ECM electrical connector EN16.
	2 Turn the ignition switch to the ON position.
	3 Measure the voltage between the fuel temperature sensor electrical connector IJ8, pin 2 (WU) and GROUND.

	Is the voltage greater than 10 volts? **Yes** REPAIR the short to battery. For additional information, refer to the wiring diagrams. CLEAR the DTCs. TEST the system for normal operation. **No** INSTALL a new fuel temperature sensor. REFER to: Fuel Temperature Sensor - 2.5L NA V6 - AJV6/3.0L NA V6 - AJ27 (303-14A Electronic Engine Controls - 2.0L NA V6 - AJV6/2.5L NA V6 - AJV6/3.0L NA V6 - AJ27, Removal and Installation). CLEAR the DTCs. TEST the system for normal operation. If the DTC is repeated, INSTALL a new ECM. REFER to: Engine Control Module (ECM) (303-14A Electronic Engine Controls - 2.0L NA V6 - AJV6/2.5L NA V6 - AJV6/3.0L NA V6 - AJ27, Removal and Installation). Before replacing an ECM, contact dealer technical support.

PINPOINT TEST G : DTC P0324, P0327, P0328, P0332, P0333. KNOCK SENSOR (KS)	
TEST CONDITIONS	**DETAILS/RESULTS/ACTIONS**
G1: CHECK THE KS SIGNAL WIRE FOR OPEN CIRCUIT	
	1 Turn the ignition switch to the OFF position.
	2 Disconnect the KS sensor electrical connector EN23.
	3 Disconnect the ECM electrical connector EN16.
	4 Measure the resistance between EN23, pin 1 (N) and EN16, pin 98 (N).
	Is the resistance less than 5 ohms? **Yes** GO to G2. **No** REPAIR the circuit. For additional information, refer to the wiring diagrams. CLEAR the DTCs. TEST the system for normal operation.
G2: CHECK THE KS SIGNAL WIRE FOR SHORT TO BATTERY	
	1 Turn the ignition switch to the ON position.
	2 Check for a voltage between EN23, pin 1 (N) and GROUND.
	Is a voltage present? **Yes** REPAIR the short to battery. For additional information, refer to the wiring diagrams. CLEAR the DTCs. TEST the system for normal operation. **No** GO to G3.
G3: CHECK THE KS SIGNAL WIRE FOR A SHORT TO GROUND	
	1 Measure the resistance between the KS sensor electrical connector EN23, pin 1 (N) and GROUND.
	Is the resistance less than 10,000 ohms? **Yes** REPAIR the short to GROUND. For additional information, refer to the wiring diagrams. CLEAR the DTCs. TEST the system for normal operation. **No** INSTALL a new KS. REFER to: Knock Sensor (KS) (303-14B Electronic Engine Controls - 2.0L Duratorq-TDCi/2.2L Duratorq-TDCi (110kW/150PS) - Puma, Removal and Installation) / Knock Sensor (KS) (303-14B Electronic Engine Controls - 2.0L Duratorq-TDCi/2.2L Duratorq-TDCi (110kW/150PS) - Puma, Removal and Installation). CLEAR DTCs. TEST the system for normal operation. If the DTC is repeated, INSTALL a new ECM. REFER to: Engine Control Module (ECM) (303-14A Electronic Engine Controls - 2.0L NA V6 - AJV6/2.5L NA V6 - AJV6/3.0L NA V6 - AJ27, Removal and Installation). Before replacing an ECM, contact dealer technical support.
G4: CHECK THE KS GROUND CIRCUIT FOR OPEN CIRCUIT	
	1 Measure the resistance between the KS electrical connector EN23 pin 2 (W) and GROUND.
	Is the resistance greater than 5 ohms? **Yes** REPAIR the circuit between EN23, pin 2 (W) and GROUND. CLEAR the DTCs. TEST the system for normal operation. (This circuit includes the ECM. For additional information, refer to wiring diagrams.) **No** GO to G5.
G5: CHECK THE KS GROUND LEAD FOR OPEN CIRCUIT	
	1 Disconnect the KS electrical connector, EN23.
	2 Disconnect the ECM electrical connector, EN16.
	3 Measure the resistance between EN23, pin2 (W) and EN16, pin 100 (BG).
	Is the resistance less than 5 ohms? **Yes** GO to G6. **No** REPAIR the circuit between EN23, pin2 (W) and EN16, pin 100 (BG). For additional information, refer to the wiring diagrams. CLEAR the DTCs. TEST the system for normal operation.
G6: CHECK THE KS GROUND LEAD FOR SHORT TO BATTERY	
	1 Connect the KS sensor electrical connector EN23.
	2 Connect the ECM electrical connector EN16.
	3 Turn the ignition switch to the ON position.
	4 Check for a voltage between EN23, pin 2 (W) and GROUND.
	Is the voltage greater than 1 volt? **Yes** REPAIR the short to battery. For additional information, refer to the wiring diagrams. CLEAR the DTCs. TEST the system for normal operation. **No** INSTALL a new KS. REFER to: Knock Sensor (KS) (303-14B Electronic Engine Controls - 2.0L Duratorq-TDCi/2.2L Duratorq-TDCi (110kW/150PS) - Puma, Removal and Installation). CLEAR the DTCs. TEST the system for normal operation. If the DTC is repeated, INSTALL a new ECM. REFER to: Engine Control Module (ECM) (303-14A Electronic Engine Controls - 2.0L NA V6 - AJV6/2.5L NA V6 - AJV6/3.0L NA V6 - AJ27, Removal and Installation). Before replacing an ECM, contact dealer technical support.

PINPOINT TEST H : DTC P0196, P0197, P0198. OIL TEMPERATURE SENSOR	
TEST CONDITIONS	**DETAILS/RESULTS/ACTIONS**
H1: CHECK THE OIL TEMPERATURE SENSOR SIGNAL WIRE FOR OPEN CIRCUIT	
	1 Turn the ignition switch to the OFF position.
	2 Disconnect the oil temperature sensor electrical connector EN25.
	3 Disconnect the ECM electrical connector EN16.
	4 Measure the resistance between the oil temperature sensor electrical connector EN25, pin 1 (Y) and the ECM electrical connector EN16, pin 78 (Y).
	Is the resistance less than 5 ohms? **Yes** GO to H2. **No** REPAIR the circuit. For additional information, refer to the wiring diagrams. CLEAR the DTCs. TEST the system for normal operation.
H2: CHECK THE OIL TEMPERATURE SENSOR GROUND CIRCUIT FOR OPEN CIRCUIT	
	1 Measure the resistance between the oil temperature sensor electrical connector EN25, pin 2 (BG) and GROUND.
	Is the resistance less than 5 ohms? **Yes** GO to H3. **No** REPAIR the circuit. For additional information, refer to the wiring diagrams. CLEAR the DTCs. TEST the system for normal operation.
H3: CHECK THE OIL TEMPERATURE SENSOR GROUND CIRCUIT FOR SHORT TO BATTERY	
	1 Connect ECM electrical connector, EN16.
	2 Turn the ignition switch to the ON position.
	3 Measure the voltage between the oil temperature sensor electrical connector EN25, pin 2 (BG) and GROUND.
	Is the voltage greater than 1 volt? **Yes** REPAIR the short circuit. For additional information, refer to the wiring diagrams. CLEAR the DTCs. TEST the system for normal operation. **No** GO to H4.
H4: CHECK THE OIL TEMPERATURE SENSOR CIRCUIT FOR A SHORT TO GROUND	
	1 Turn the ignition switch to the OFF position.
	2 Disconnect ECM electrical connector, EN16.
	3 Measure the resistance between the oil temperature sensor electrical connector EN25, pin 1 (Y) and GROUND.
	Is the resistance less than 10,000 ohms? **Yes** REPAIR the short to GROUND. For additional information, refer to the wiring diagrams. CLEAR the DTCs. TEST the system for normal operation. **No** GO to H5.
H5: CHECK THE OIL TEMPERATURE SENSOR CIRCUIT FOR A SHORT TO BATTERY	
	1 Connect ECM electrical connector, EN16.
	2 Turn the ignition switch to the ON position.
	3 Measure the voltage between the oil temperature sensor electrical connector EN25, pin 1 (Y) and GROUND.
	Is the voltage greater than 10 volts? **Yes** REPAIR the short to battery. For additional information, refer to the wiring diagrams. CLEAR the DTCs. TEST the system for normal operation. **No** INSTALL a new oil temperature sensor. REFER to: Oil Temperature Sensor (303-14A Electronic Engine Controls - 2.0L NA V6 - AJV6/2.5L NA V6 - AJV6/3.0L NA V6 - AJ27, Removal and Installation). CLEAR the DTCs. TEST the system for normal operation. If the DTC is repeated, INSTALL a new ECM. REFER to: Engine Control Module (ECM) (303-14A Electronic Engine Controls - 2.0L NA V6 - AJV6/2.5L NA V6 - AJV6/3.0L NA V6 - AJ27, Removal and Installation). Before replacing an ECM, contact dealer technical support.

PINPOINT TEST I : DTC P0131, P0132, P0133, P1646. RIGHT-HAND BANK HO2S	
TEST CONDITIONS	**DETAILS/RESULTS/ACTIONS**
I1: CHECK THE CONSTANT CIRCUIT OF THE RIGHT-HAND BANK HO2S FOR OPEN CIRCUIT	
	1 Disconnect the HO2S electrical connector EN37.
	2 Disconnect the ECM electrical connector, EN16.
	3 Measure the resistance between EN16, pin 84 (P) and EN37, pin 4 (P).
	Is the resistance less than 5 ohms? **Yes** GO to I2. **No** REPAIR the circuit. For additional information, refer to the wiring diagrams. CLEAR the DTCs. TEST the system for normal operation.
I2: CHECK THE CONSTANT CIRCUIT OF THE RIGHT-HAND BANK HO2S FOR SHORT TO GROUND	
	1 Measure the resistance between EN16, pin 84 (P) and GROUND.
	Is the resistance less than 10,000 ohms? **Yes** REPAIR the short circuit. For additional information, refer to the wiring diagrams. CLEAR the DTCs. TEST the system for normal operation. **No** GO to I3.
I3: CHECK THE CONSTANT CIRCUIT OF THE RIGHT-HAND BANK HO2S FOR SHORT TO BATTERY	
	1 Connect the ECM electrical connector EN16.
	2 Turn the ignition switch to the ON position.
	3 Measure the voltage between EN37, pin 4 (P) and GROUND.

	Is the voltage greater than 5 volts? **Yes** REPAIR the short circuit. For additional information, refer to the wiring diagrams. CLEAR the DTCs. TEST the system for normal operation. **No** GO to I4.
I4: CHECK THE VARIABLE CIRCUIT OF THE RIGHT-HAND BANK HO2S FOR OPEN CIRCUIT	
	1 Disconnect the ECM electrical connector, EN16.
	2 Measure the resistance between EN16, pin 83 (Y) and EN37, pin 3 (Y).
	Is the resistance less than 5 ohms? **Yes** GO to I5. **No** REPAIR the circuit. For additional information, refer to the wiring diagrams. CLEAR the DTCs. TEST the system for normal operation.
I5: CHECK THE VARIABLE CIRCUIT OF THE RIGHT-HAND BANK HO2S FOR SHORT TO GROUND	
	1 Measure the resistance between EN16, pin 83 (Y) and GROUND.
	Is the resistance less than 10,000 ohms? **Yes** REPAIR the short circuit. For additional information, refer to the wiring diagrams. CLEAR the DTCs. TEST the system for normal operation. **No** GO to I6.
I6: CHECK THE VARIABLE CIRCUIT OF THE RIGHT-HAND BANK HO2S FOR SHORT TO BATTERY	
	1 Connect the ECM electrical connector EN16.
	2 Turn the ignition switch to the ON position.
	3 Measure the voltage between EN37, pin 3 (Y) and GROUND.
	Is the voltage greater than 5 volts? **Yes** REPAIR the short circuit. For additional information, refer to the wiring diagrams. CLEAR the DTCs. TEST the system for normal operation. **No** INSTALL a new HO2S. REFER to: Heated Oxygen Sensor (HO2S) RH (303-14A Electronic Engine Controls - 2.0L NA V6 - AJV6/2.5L NA V6 - AJV6/3.0L NA V6 - AJ27, Removal and Installation). CLEAR the DTCs. TEST the system for normal operation. If the DTC is repeated, INSTALL a new ECM. REFER to: Engine Control Module (ECM) (303-14A Electronic Engine Controls - 2.0L NA V6 - AJV6/2.5L NA V6 - AJV6/3.0L NA V6 - AJ27, Removal and Installation). Before replacing an ECM, contact dealer technical support.

PINPOINT TEST J : DTC P0037, P0038, P0137, P0138, P0139, P0140. RIGHT-HAND BANK CATALYST MONITOR	
TEST CONDITIONS	**DETAILS/RESULTS/ACTIONS**
J1: CHECK THE POWER SUPPLY CIRCUIT TO THE RIGHT-HAND BANK CATALYST MONITOR HEATER	
	1 Turn the ignition switch to the OFF position.
	2 Disconnect the catalyst monitor sensor electrical connector EN14.
	3 Turn the ignition switch to the ON position.
	4 Measure the voltage between the catalyst monitor sensor electrical connector EN14, pin 2 (WG) and GROUND.
	Is the voltage less than 10 volts? **Yes** GO to J6. **No** GO to J2.
J2: CHECK CONTINUITY OF THE RIGHT-HAND BANK CATALYST MONITOR SENSOR GROUND CIRCUIT	
	1 Turn the ignition switch to the OFF position.
	2 Disconnect the ECM electrical connector EN16.
	3 Measure the resistance between the catalyst monitor sensor electrical connector EN14, pin 3 (W) and the ECM electrical connector EN16, pin 130.
	Is the resistance less than 5 ohms? **Yes** GO to J3. **No** REPAIR the circuit. For additional information, refer to the wiring diagrams. CLEAR the DTCs. TEST the system for normal operation.
J3: CHECK CONTINUITY OF THE POWER SUPPLY WIRE TO THE RIGHT-HAND BANK CATALYST MONITOR SENSOR	
	1 Measure the resistance between the RH bank catalyst monitor sensor electrical connector EN14, pin 4 (N) and the ECM electrical connector EN16, pin 128 (N).
	Is the resistance less than 5 ohms? **Yes** GO to J4. **No** REPAIR the circuit. For additional information, refer to the wiring diagrams. CLEAR the DTCs. TEST the system for normal operation.
J4: CHECK THE RIGHT-HAND BANK CATALYST MONITOR SENSOR POWER SUPPLY WIRE FOR A SHORT TO GROUND	
	1 Measure the resistance between the catalyst monitor sensor electrical connector EN14, pin 4 (N) and GROUND.
	Is the resistance less than 10,000 ohms? **Yes** REPAIR the short to ground. For additional information, refer to the wiring diagrams. CLEAR the DTCs. TEST the system for normal operation. **No** GO to J5.
J5: CHECK THE RIGHT-HAND BANK CATALYST MONITOR SENSOR POWER SUPPLY WIRE FOR A SHORT TO BATTERY	
	1 Measure the voltage between the catalyst monitor sensor electrical connector EN14, pin 4 (N) and GROUND.
	Is the voltage greater than 1 volt? **Yes** REPAIR the short to battery. For additional information, refer to the wiring diagrams. CLEAR the DTCs. TEST the system for normal operation.

	No INSTALL a new RH bank catalyst monitor sensor. For additional information, REFER to: Catalyst Monitor Sensor RH (303-14A Electronic Engine Controls - 2.0L NA V6 - AJV6/2.5L NA V6 - AJV6/3.0L NA V6 - AJ27, Removal and Installation). CLEAR the DTCs. TEST the system for normal operation. If the DTC is repeated, INSTALL a new ECM. For additional information, REFER to: Engine Control Module (ECM) (303-14A Electronic Engine Controls - 2.0L NA V6 - AJV6/2.5L NA V6 - AJV6/3.0L NA V6 - AJ27, Removal and Installation). Before replacing an ECM, contact dealer technical support.
J6: CHECK THE RIGHT-HAND BANK CATALYST MONITOR SENSOR POWER SUPPLY CIRCUIT	
	1 Measure the voltage between the catalyst monitor sensor electrical connector EN14 pin 2 (WG) and GROUND.
	Is the voltage less than 10 volts? **Yes** GO to J8. **No** GO to J7.
J7: CHECK CONTINUITY OF THE RIGHT-HAND BANK CATALYST MONITOR SENSOR HEATER GROUND CIRCUIT	
	1 Turn the ignition switch to the OFF position.
	2 Disconnect the ECM electrical connector EN16.
	3 Measure the resistance between the catalyst monitor sensor electrical connector EN14, pin 1 (U) and the ECM electrical connector EN16, pin 92 (U).
	Is the resistance less than 5 ohms? **Yes** INSTALL a new ECM. For additional information, REFER to: Engine Control Module (ECM) (303-14A Electronic Engine Controls - 2.0L NA V6 - AJV6/2.5L NA V6 - AJV6/3.0L NA V6 - AJ27, Removal and Installation). Before replacing a ECM, contact Dealer technical support. **No** REPAIR the circuit. For additional information, refer to the wiring diagrams. CLEAR the DTCs. TEST the system for normal operation.
J8: CHECK FUSE 38 OF THE ENGINE COMPARTMENT FUSE BOX	
	1 Check the fuse.
	Is the fuse OK? **Yes** GO to J10. **No** GO to J9.
J9: CHECK FUSE 38 OF THE ENGINE COMPARTMENT FUSE BOX FOR A SHORT TO GROUND	
	1 Measure the resistance between electrical connector JB34, pin 97 of the engine compartment fuse box and GROUND.
	Is the resistance less than 10,000 ohms? **Yes** REPAIR short to ground between the engine compartment fuse box and the right-hand bank HO2S. CLEAR the DTC. TEST the system for normal operation. **No** INSTALL a new fuse. Check the circuit for cause of fuse failure. CLEAR the DTC. TEST the system for normal operation.
J10: CHECK THE POWER SUPPLY TO FUSE 38 IN THE ENGINE COMPARTMENT FUSE BOX	
	1 Measure the voltage between fuse 38 electrical connector JB34 pin 97 and GROUND.
	Is the voltage less than 10 volts? **Yes** Repair the circuit from the ECM control relay to the engine compartment fuse box. CLEAR the DTC. TEST the system for normal operation. **No** Repair the circuit between the engine compartment fuse box and the HO2S. For additional information, refer to wiring diagrams. CLEAR the DTC. TEST the system for normal operation.

PINPOINT TEST K : P0151, P0152, P0153, P1647. LEFT-HAND BANK HO2S	
TEST CONDITIONS	**DETAILS/RESULTS/ACTIONS**
K1: CHECK THE CONSTANT CIRCUIT OF THE LEFT-HAND BANK HO2S FOR OPEN CIRCUIT	
	1 Disconnect the HO2S electrical connector EN32.
	2 Disconnect the ECM electrical connector EN16.
	3 Measure the resistance between EN16, pin 108 (P) and EN32, pin 4 (P).
	Is the resistance less than 5 ohms? **Yes** GO to K2. **No** REPAIR the circuit. For additional information, refer to the wiring diagrams. CLEAR the DTCs. TEST the system for normal operation.
K2: CHECK THE CONSTANT CIRCUIT OF THE LEFT-HAND BANK HO2S FOR SHORT TO GROUND	
	1 Measure the resistance between EN16, pin 108 (P) and GROUND.
	Is the resistance less than 10,000 ohms? **Yes** REPAIR the short circuit. For additional information, refer to the wiring diagrams. CLEAR the DTCs. TEST the system for normal operation. **No** GO to K3.
K3: CHECK THE CONSTANT CIRCUIT OF THE LEFT-HAND BANK HO2S FOR SHORT TO BATTERY	
	1 Connect the ECM electrical connector EN16.
	2 Turn the ignition switch to the ON position.
	3 Measure the voltage between EN32, pin 4 (P) and GROUND.
	Is the voltage greater than 5 volts? **Yes** REPAIR the short circuit. For additional information, refer to the wiring diagrams. CLEAR the DTCs. TEST the system for normal operation. **No** GO to K4.

K4: CHECK THE VARIABLE CIRCUIT OF THE LEFT-HAND BANK HO2S FOR OPEN CIRCUIT	
	1 Disconnect the HO2S electrical connector EN32.
	2 Disconnect the ECM electrical connector EN16.
	3 Measure the resistance between EN16, pin 107 (Y) and EN32, pin 3 (Y)
	Is the resistance less than 5 ohms? **Yes** GO to K5. **No** REPAIR the circuit. For additional information, refer to the wiring diagrams. CLEAR the DTCs. TEST the system for normal operation.
K5: CHECK THE VARIABLE CIRCUIT OF THE LEFT-HAND BANK HO2S FOR SHORT TO GROUND	
	1 Measure the resistance between EN16, pin 107 (Y) and GROUND.
	Is the resistance less than 10,000 ohms? **Yes** REPAIR the short circuit. For additional information, refer to the wiring diagrams. CLEAR the DTCs. TEST the system for normal operation. **No** GO to K6.
K6: CHECK THE VARIABLE CIRCUIT OF THE LEFT-HAND BANK HO2S FOR SHORT TO BATTERY	
	1 Connect the ECM electrical connector EN16.
	2 Turn the ignition switch to the ON position.
	3 Measure the voltage between EN32 pin 3 (Y) and GROUND.
	Is the voltage greater than 5 volts? **Yes** REPAIR the short circuit. For additional information, refer to the wiring diagrams. CLEAR the DTCs. TEST the system for normal operation. **No** INSTALL a new left-hand HO2S. REFER to: Heated Oxygen Sensor (HO2S) LH (303-14A Electronic Engine Controls - 2.0L NA V6 - AJV6/2.5L NA V6 - AJV6/3.0L NA V6 - AJ27, Removal and Installation). CLEAR the DTCs. TEST the system for normal operation. If the DTC is repeated, INSTALL a new ECM. REFER to: Engine Control Module (ECM) (303-14A Electronic Engine Controls - 2.0L NA V6 - AJV6/2.5L NA V6 - AJV6/3.0L NA V6 - AJ27, Removal and Installation). Before replacing an ECM, contact dealer technical support.

PINPOINT TEST L : DTC P0057, P0058, P0157, P0158, P0159, P0160. LEFT-HAND BANK CATALYST MONITOR	
TEST CONDITIONS	**DETAILS/RESULTS/ACTIONS**
L1: CHECK THE POWER SUPPLY CIRCUIT TO THE LEFT-HAND BANK CATALYST MONITOR HEATER	
	1 Turn the ignition switch to the OFF position.
	2 Disconnect the catalyst monitor sensor electrical connector EN9.
	3 Turn the ignition switch to the ON position.
	4 Measure the voltage between the catalyst monitor sensor electrical connector EN9 pin 2 (WR) and GROUND.
	Is the voltage less than 10 volts? **Yes** GO to L6. **No** GO to L2.
L2: CHECK CONTINUITY OF THE LEFT-HAND BANK CATALYST MONITOR SENSOR GROUND CIRCUIT	
	1 Turn the ignition switch to the OFF position.
	2 Disconnect the ECM electrical connector EN16.
	3 Measure the resistance between the catalyst monitor sensor electrical connector EN9 pin 3 (W) and EN16, pin 130.
	Is the resistance less than 5 ohms? **Yes** GO to L3. **No** REPAIR the circuit. For additional information, refer to the wiring diagrams. CLEAR the DTCs. TEST the system for normal operation.
L3: CHECK CONTINUITY OF THE POWER SUPPLY WIRE TO THE LEFT-HAND BANK CATALYST MONITOR SENSOR	
	1 Measure the resistance between the catalyst monitor sensor electrical connector EN9 pin 4 (N) and the ECM electrical connector EN16 pin 129 (N).
	Is the resistance less than 5 ohms? **Yes** GO to L4. **No** REPAIR the circuit. For additional information, refer to the wiring diagrams. CLEAR the DTCs. TEST the system for normal operation.
L4: CHECK THE LEFT-HAND BANK CATALYST MONITOR SENSOR POWER SUPPLY WIRE FOR A SHORT TO GROUND	
	1 Measure the resistance between the catalyst monitor sensor electrical connector EN9 pin 4 (N) and GROUND.
	Is the resistance less than 10,000 ohms? **Yes** REPAIR the short to ground. For additional information, refer to the wiring diagrams. CLEAR the DTCs. TEST the system for normal operation. **No** GO to L5.
L5: CHECK THE LEFT-HAND BANK CATALYST MONITOR SENSOR POWER SUPPLY WIRE FOR A SHORT TO BATTERY	
	1 Measure the voltage between the catalyst monitor sensor electrical connector EN9 pin 4 (N) and GROUND.
	Is the voltage greater than 1 volt? **Yes** REPAIR the short to battery. For additional information, refer to the wiring diagrams. CLEAR the DTCs. TEST the system for normal operation. **No** INSTALL a new left-hand bank catalyst monitor sensor. For additional information, REFER to: Catalyst Monitor Sensor LH (303-14A Electronic Engine Controls - 2.0L NA V6 - AJV6/2.5L NA V6 - AJV6/3.0L NA V6 - AJ27, Removal and Installation). CLEAR the DTCs. TEST the system for normal operation. If the DTC is repeated, INSTALL a new ECM. For additional information,

	REFER to: Engine Control Module (ECM) (303-14A Electronic Engine Controls - 2.0L NA V6 - AJV6/2.5L NA V6 - AJV6/3.0L NA V6 - AJ27, Removal and Installation). Before replacing an ECM, contact dealer technical support.
L6: CHECK THE LEFT-HAND BANK CATALYST MONITOR SENSOR POWER SUPPLY CIRCUIT	
	1 Measure the voltage between the catalyst monitor sensor electrical connector EN9 pin 2 (WR) and GROUND.
	Is the voltage less than 10 volts? **Yes** GO to L8. **No** GO to L7.
L7: CHECK CONTINUITY OF THE LEFT-HAND BANK CATALYST MONITOR SENSOR HEATER GROUND CIRCUIT	
	1 Turn the ignition switch to the OFF position.
	2 Disconnect the ECM electrical connector EN16.
	3 Measure the resistance between the catalyst monitor sensor electrical connector EN9 pin 1 (UY) and the ECM electrical connector EN16 pin 93 (UY).
	Is the resistance less than 5 ohms? **Yes** INSTALL a new ECM. For additional information, REFER to: Engine Control Module (ECM) (303-14A Electronic Engine Controls - 2.0L NA V6 - AJV6/2.5L NA V6 - AJV6/3.0L NA V6 - AJ27, Removal and Installation). Before replacing an ECM, contact dealer technical support. **No** REPAIR the circuit. For additional information, refer to the wiring diagrams. CLEAR the DTCs. TEST the system for normal operation.
L8: CHECK FUSE 42 OF THE ENGINE COMPARTMENT FUSE BOX	
	1 Check the fuse.
	Is the fuse OK? **Yes** GO to L10. **No** GO to L9.
L9: CHECK FUSE 42 OF THE ENGINE COMPARTMENT FUSE BOX FOR A SHORT TO GROUND	
	1 Measure the resistance between electrical connector JB34 pin 105 of the engine compartment fuse box and GROUND.
	Is the resistance less than 10,000 ohms? **Yes** REPAIR short to ground between the engine compartment fuse box and the left-hand bank HO2S. For additional information, refer to wiring diagrams. CLEAR the DTC. TEST the system for normal operation. **No** INSTALL a new fuse. Check the circuit for cause of fuse failure. CLEAR the DTC. TEST the system for normal operation.
L10: CHECK THE POWER SUPPLY TO FUSE 42 IN THE ENGINE COMPARTMENT FUSE BOX	
	1 Measure the voltage between Fuse 42 electrical connector JB34 pin 105 and GROUND.
	Is the voltage less than 10 volts? **Yes** Repair the circuit from the ECM control relay to the engine compartment fuse box. For additional information, refer to wiring diagrams. CLEAR the DTC. TEST the system for normal operation. **No** Repair the circuit between the engine compartment fuse box and the HO2S. For additional information, refer to wiring diagrams.

PINPOINT TEST M : DTC P0101, P0102, P0103, P1104. MASS AIR FLOW SENSOR (MAF)

TEST CONDITIONS	DETAILS/RESULTS/ACTIONS
M1: CHECK THE MAF SENSOR POWER SUPPLY	
	1 Turn the ignition switch to the OFF position.
	2 Disconnect the MAF sensor electrical connector EN6.
	3 Turn the ignition switch to the ON position.
	4 Measure the voltage between the MAF sensor electrical connector EN6 pin 1 (GU) and GROUND.
	Is the voltage less than 10 volts? **Yes** GO to M5. **No** GO to M2.
M2: CHECK CONTINUITY OF THE MAF SENSOR GROUND CIRCUIT	
	1 Turn the ignition switch to the OFF position.
	2 Disconnect the ECM electrical connector EN16.
	3 Measure the resistance between the MAF sensor electrical connector EN6 pin 3 (GW) and the ECM electrical connector EN16 pin 44 (GW).
	Is the resistance less than 5 ohms? **Yes** GO to M3. **No** REPAIR the circuit. For additional information, refer to the wiring diagrams. CLEAR the DTCs. TEST the system for normal operation.
M3: CHECK CONTINUITY OF THE MAF SENSOR GROUND CIRCUIT	
	1 Measure the resistance between the MAF sensor electrical connector EN6 pin 2 (BW) and the ECM electrical connector EN16 pin 45 and pin 46 (BW).
	Is the resistance less than 5 ohms? **Yes** GO to M4. **No** REPAIR the circuit. For additional information, refer to the wiring diagrams. CLEAR the DTCs. TEST the system for normal operation.
M4: CHECK THE MAF SENSOR CIRCUIT FOR SHORT TO GROUND	
	1 Measure the resistance between the MAF sensor electrical connector EN6 pin 3 (GW) and GROUND.

	Is the resistance greater than 10,000 ohms? **Yes** INSTALL a new MAF sensor. For additional information, REFER to: Mass Air Flow (MAF) Sensor (303-14A Electronic Engine Controls - 2.0L NA V6 - AJV6/2.5L NA V6 - AJV6/3.0L NA V6 - AJ27, Removal and Installation). CLEAR DTCs. TEST the system for normal operation. If the DTC is repeated, INSTALL a new ECM. For additional information, REFER to: Engine Control Module (ECM) (303-14A Electronic Engine Controls - 2.0L NA V6 - AJV6/2.5L NA V6 - AJV6/3.0L NA V6 - AJ27, Removal and Installation). Before replacing an ECM, contact dealer technical support. **No** REPAIR the short to ground. For additional information, refer to the wiring diagrams. CLEAR the DTCs. TEST the system for normal operation.
M5: CHECK FUSE 36 OF THE ENGINE COMPARTMENT FUSE BOX	
	1 Check the fuse.
	Is the fuse OK? **Yes** GO to M7. **No** GO to M6.
M6: CHECK FUSE 36 OF THE ENGINE COMPARTMENT FUSE BOX FOR A SHORT TO GROUND	
	1 Measure the resistance between electrical connector JB34 pin 93 of the engine compartment fuse box and GROUND.
	Is the resistance less than 10,000 ohms? **Yes** REPAIR short to ground between the engine compartment fuse box and the MAF sensor. For additional information, refer to wiring diagrams. CLEAR the DTC. TEST the system for normal operation. **No** INSTALL a new fuse. Check the circuit for cause of fuse failure. CLEAR the DTC. TEST the system for normal operation.
M7: CHECK THE POWER SUPPLY FROM FUSE 36 IN THE ENGINE COMPARTMENT FUSE BOX TO THE MAF SENSOR	
	1 Measure the voltage between the engine compartment fuse box electrical connector JB34 pin 93 and GROUND.
	Is the voltage less than 10 volts? **Yes** Repair the circuit from the engine compartment fuse box to the MAF sensor. For additional information, refer to wiring diagrams. CLEAR the DTC. TEST the system for normal operation. **No** Recheck DTCs.

PINPOINT TEST N : P0111, P0112, P0113. IAT SENSOR	
TEST CONDITIONS	**DETAILS/RESULTS/ACTIONS**
N1: CHECK CONTINUITY OF THE INTAKE AIR TEMPERATURE (IAT) SENSOR POWER SUPPLY CIRCUIT	
	1 Turn the ignition switch to the OFF position.
	2 Disconnect the MAF sensor electrical connector EN6.
	3 Disconnect the ECM electrical connector EN16.
	4 Measure the resistance between the MAF sensor electrical connector EN6 pin 4 (O) and the ECM electrical connector EN16, pin 71 (O).
	Is the resistance less than 5 ohms? **Yes** GO to N2. **No** REPAIR the circuit. For additional information, refer to the wiring diagrams. CLEAR the DTCs. TEST the system for normal operation.
N2: CHECK CONTINUITY OF THE IAT SENSOR CIRCUIT	
	1 Measure the resistance between the MAF sensor electrical connector EN6 pin 5 (BG) and the ECM electrical connector EN16, pin 19 (BG).
	Is the resistance less than 5 ohms? **Yes** GO to N4. **No** REPAIR the circuit. For additional information, refer to the wiring diagrams. CLEAR the DTCs. TEST the system for normal operation.
N3: CHECK THE IAT SENSOR CIRCUIT FOR SHORT TO BATTERY	
	1 Turn the ignition switch to the OFF position.
	2 Disconnect the MAF sensor electrical connector EN6.
	3 Check for a voltage between EN6 pin 5 (BG) and GROUND.
	Is the voltage greater than 1 volt? **Yes** GO to N1. **No** INSTALL a new MAF sensor. REFER to: Mass Air Flow (MAF) Sensor (303-14A Electronic Engine Controls - 2.0L NA V6 - AJV6/2.5L NA V6 - AJV6/3.0L NA V6 - AJ27, Removal and Installation). CLEAR the DTC. TEST the system for normal operation.
N4: CHECK THE IAT SENSOR POWER SUPPLY CIRCUIT FOR SHORT TO GROUND	
	1 Measure the resistance between the MAF sensor electrical connector EN6 pin 4 (O) and GROUND.
	Is the resistance less than 10,000 ohms? **Yes** REPAIR the short to GROUND. For additional information, refer to the wiring diagrams. CLEAR the DTCs. TEST the system for normal operation. **No** GO to N5.
N5: CHECK THE IAT SENSOR GROUND CIRCUIT FOR SHORT TO BATTERY	
	1 Connect the ECM electrical connector, EN16.
	2 Turn the ignition switch to the ON position.
	3 Check for voltage at EN6 pin 5 (BG)

	Is the voltage greater than 1 volt? **Yes** REPAIR the short circuit. For additional information, refer to the wiring diagrams. CLEAR the DTCs. TEST the system for normal operation. **No** INSTALL a new MAF sensor. REFER to: Mass Air Flow (MAF) Sensor (303-14A Electronic Engine Controls - 2.0L NA V6 - AJV6/2.5L NA V6 - AJV6/3.0L NA V6 - AJ27, Removal and Installation). CLEAR the DTCs. TEST the system for normal operation. If the DTC is repeated, INSTALL a new ECM. REFER to: Engine Control Module (ECM) (303-14A Electronic Engine Controls - 2.0L NA V6 - AJV6/2.5L NA V6 - AJV6/3.0L NA V6 - AJ27, Removal and Installation). Before replacing an ECM, contact dealer technical support.

PINPOINT TEST O : DTC P0051, P0052. LEFT-HAND BANK H02S HEATER	
TEST CONDITIONS	**DETAILS/RESULTS/ACTIONS**
O1: CHECK THE POWER SUPPLY CIRCUIT TO THE LEFT-HAND BANK HO2S HEATER	
	1 Turn the ignition switch to the ON position.
	2 Measure the voltage between the HO2S electrical connector EN32 pin 2 (WR) and GROUND.
	Is the voltage less than 10 volts? **Yes** GO to O4. **No** GO to O2.
O2: CHECK THE GROUND CIRCUIT TO THE LEFT-HAND BANK HO2S HEATER	
	1 Turn the ignition switch to the OFF position.
	2 Disconnect the ECM electrical connector EN16.
	3 Measure the resistance between the HO2S electrical connector EN32 pin 1 (GO) and the ECM electrical connector EN16 pins 55 and 56 (GO).
	Is the resistance of each wire less than 5 ohms? **Yes** GO to O3. **No** REPAIR the circuit. For additional information, refer to the wiring diagrams. CLEAR the DTCs. TEST the system for normal operation.
O3: CHECK THE LEFT-HAND BANK HO2S CIRCUIT FOR SHORT TO GROUND	
	1 Measure the resistance between the HO2S electrical connector EN32 pin 1 (GO) and GROUND.
	Is the resistance less than 10,000 ohms? **Yes** REPAIR the short to ground. For additional information, refer to the wiring diagrams. CLEAR the DTCs. TEST the system for normal operation. **No** INSTALL a new left-hand bank HO2S. For additional information, REFER to: Heated Oxygen Sensor (HO2S) LH (303-14A Electronic Engine Controls - 2.0L NA V6 - AJV6/2.5L NA V6 - AJV6/3.0L NA V6 - AJ27, Removal and Installation). CLEAR DTCs. TEST the system for normal operation. If the DTC is repeated, INSTALL a new ECM. For additional information, REFER to: Engine Control Module (ECM) (303-14A Electronic Engine Controls - 2.0L NA V6 - AJV6/2.5L NA V6 - AJV6/3.0L NA V6 - AJ27, Removal and Installation). Before replacing an ECM, contact dealer technical support.
O4: CHECK FUSE 42 OF THE ENGINE COMPARTMENT FUSE BOX	
	1 Check the fuse.
	Is the fuse OK? **Yes** GO to O6. **No** GO to O5.
O5: CHECK FUSE 42 OF THE ENGINE COMPARTMENT FUSE BOX FOR A SHORT TO GROUND	
	1 Measure the resistance between electrical connector JB34 pin 105 of the engine compartment fuse box and GROUND.
	Is the resistance less than 10,000 ohms? **Yes** REPAIR short to ground between the engine compartment fuse box and the left-hand bank HO2S. For additional information, refer to wiring diagrams. CLEAR the DTC. TEST the system for normal operation. **No** INSTALL a new fuse. Check the circuit for cause of fuse failure. CLEAR the DTC. TEST the system for normal operation.
O6: CHECK THE POWER SUPPLY TO FUSE 42 IN THE ENGINE COMPARTMENT FUSE BOX	
	1 Measure the voltage between fuse 42, electrical connector JB34 pin 105 and GROUND.
	Is the voltage less than 10 volts? **Yes** Repair the circuit from the ECM control relay to the engine compartment fuse box. For additional information, refer to wiring diagrams. CLEAR the DTC. TEST the system for normal operation. **No** Repair the circuit between the engine compartment fuse box and the HO2S. For additional information, refer to wiring diagrams. CLEAR the DTC. TEST the system for normal operation.

PINPOINT TEST P : DTC P1606. ECM RELAY.	
TEST CONDITIONS	**DETAILS/RESULTS/ACTIONS**
P1: CHECK THE ECM CONTROL RELAY	
	1 Turn the ignition switch to the ON position.
	Does the ECM relay make an audible click? **Yes** GO to P2. **No** GO to P6.
P2: CHECK FOR POWER SUPPLY FROM THE ECM CONTROL RELAY	
	1 Measure the voltage between the ECM control relay JB34 pin 131 and GROUND.

	Is the voltage less than 10 volts? **Yes** GO to P3. **No** REPAIR the circuit from the ECM control relay to the ECM. For additional information, refer to wiring diagrams. CLEAR the DTC. TEST the system for normal operation.
P3: CHECK FUSE 9 IN THE ENGINE COMPARTMENT FUSE BOX	
	1 Check the fuse.
	Is the fuse OK? **Yes** GO to P4. **No** INSTALL a new fuse. Check the circuit for cause of fuse failure. CLEAR the DTC. TEST the system for normal operation.
P4: CHECK THE POWER SUPPLY TO FUSE 9 IN THE ENGINE COMPARTMENT FUSE BOX	
	1 Measure the voltage between Fuse 9 electrical connector JB34 pin 75 and GROUND.
	Is the voltage less than 10 volts? **Yes** Repair the circuit from the battery positive to the engine compartment fuse box. CLEAR the DTC. TEST the system for normal operation. **No** GO to P5.
P5: CHECK THE POWER SUPPLY FROM FUSE 9 IN THE ENGINE COMPARTMENT FUSE BOX TO THE ECM CONTROL RELAY	
	1 Measure the voltage between the ECM control relay electrical connector JB34 pin 132 and GROUND.
	Is the voltage less than 10 volts? **Yes** Repair the circuit from the engine compartment fuse box to the ECM control relay. CLEAR the DTC. TEST the system for normal operation. **No** INSTALL a new ECM control relay. For additional information, refer to the electrical guide. CLEAR the DTC. TEST the system for normal operation.
P6: CHECK FUSE 31 OF THE ENGINE COMPARTMENT FUSE BOX	
	1 Check the fuse.
	Is the fuse OK? **Yes** GO to P7. **No** GO to P10.
P7: CHECK POWER SUPPLY TO THE ECM CONTROL RELAY FROM FUSE 31 OF THE ENGINE COMPARTMENT FUSE BOX	
	1 Measure the voltage between ECM relay electrical connector JB34 pin 133 and GROUND.
	Is the voltage less than 10 volts? **Yes** GO to P8. **No** GO to P12.
P8: CHECK CONTINUITY OF THE ECM CONTROL RELAY GROUND CIRCUIT	
	1 Disconnect the ECM electrical connector EN16.
	2 Remove the ECM control relay from the engine compartment fuse box.
	3 Measure the resistance between the ECM electrical connector EN16 pin 40 and JB34 pin 134 of the engine compartment fuse box.
	Is the resistance less than 5 ohms? **Yes** GO to P9. **No** REPAIR the circuit. For additional information, refer to wiring diagrams. CLEAR the DTC. TEST the system for normal operation. (This circuit includes the power distribution fuse box and the EMS relay and diode.)
P9: CHECK CONTINUITY OF THE ECM CONTROL RELAY WINDING	
	1 Measure the resistance of the ECM control relay winding between pins 1 and 2 of the ECM control relay.
	Is the resistance less than 60 ohms? **Yes** INSTALL a new ECM control relay. CLEAR the DTC. TEST the system for normal operation. **No** INSTALL a new ECM. REFER to: Engine Control Module (ECM) (303-14A Electronic Engine Controls - 2.0L NA V6 - AJV6/2.5L NA V6 - AJV6/3.0L NA V6 - AJ27, Removal and Installation). Before replacing an ECM, contact dealer technical support. CLEAR the DTC. TEST the system for normal operation.
P10: CHECK FUSE 31 OF THE ENGINE COMPARTMENT FUSE BOX FOR A SHORT TO GROUND	
	1 Measure the resistance between electrical connector JB34 pin 83 of the engine compartment fuse box and GROUND.
	Is the resistance less than 10,000 ohms? **Yes** REPAIR short to GROUND between the engine compartment fuse box and the ECM control relay. CLEAR the DTC. TEST the system for normal operation. **No** INSTALL a new fuse. CLEAR the DTC. TEST the system for normal operation.
P11: CHECK FUSE 9 OF THE ENGINE COMPARTMENT FUSE BOX FOR A SHORT TO GROUND	
	1 Measure the resistance between electrical connector JB34 pin 132 of the engine compartment fuse box and GROUND.
	Is the resistance less than 10,000 ohms? **Yes** REPAIR short to ground between the engine compartment fuse box and the ECM control relay. CLEAR the DTC. TEST the system for normal operation. **No** INSTALL a new fuse. CLEAR the DTC. TEST the system for normal operation.
P12: CHECK THE ECM CONTROL RELAY DIODE	
	1 Remove the ECM control relay diode from the engine compartment fuse box.
	2 Measure the continuity of ECM control relay diode.

	Is the resistance less than 5 ohms? **Yes** Possible intermittent fault. Recheck DTCs. **No** INSTALL a new ECM control relay diode. Make sure that the ECM control relay diode is installed correctly. For additional information, refer to the wiring diagrams. CLEAR the DTC. TEST the system for normal operation.

PINPOINT TEST Q : P0106, P0107, P0108. MAP SENSOR	
TEST CONDITIONS	**DETAILS/RESULTS/ACTIONS**
Q1: CHECK THE GROUND CIRCUIT TO THE MAP SENSOR	
	1 Disconnect the MAP sensor electrical connecter EN8.
	2 Measure the resistance between the MAP sensor electrical connecter EN8 pin 4 (BG) and GROUND. ● Reconnect electrical connectors following test.
	Is the resistance less than 5 ohms? **Yes** GO to Q2. **No** REPAIR the circuit between the MAP sensor and GROUND. For additional information, refer to wiring diagrams. CLEAR the DTC. TEST the system for normal operation.
Q2: CHECK THE POWER SUPPLY CIRCUIT TO THE MAP SENSOR FOR SHORT TO BATTERY	
	1 Turn the ignition switch to the ON position.
	2 Measure the voltage between the MAP sensor electrical connector EN8 pin 2 (OY) and GROUND.
	Is the voltage greater than 6 volts? **Yes** REPAIR the short to battery. For additional information, refer to wiring diagrams. CLEAR the DTC. TEST the system for normal operation. **No** GO to Q3.
Q3: CHECK THE POWER SUPPLY CIRCUIT TO THE MAP SENSOR FOR SHORT TO GROUND	
	1 Turn the ignition switch to the ON position.
	2 Measure the voltage between the MAP sensor electrical connector EN8 pin 2 (OY) and GROUND.
	Is the voltage less than 4 volts? **Yes** REPAIR the short to GROUND. For additional information, refer to wiring diagrams. CLEAR the DTC. TEST the system for normal operation. **No** GO to Q4.
Q4: CHECK CONTINUITY OF THE MAP SENSOR SIGNAL WIRE	
	1 Turn the ignition switch to the OFF position.
	2 Disconnect the MAP sensor electrical connector EN8.
	3 Disconnect the ECM electrical connector EN16.
	4 Measure the resistance of the circuit between MAP sensor electrical connector EN8 pin 1 (BW) and ECM electrical connector EN16 pin 127 (BW).
	Is the resistance less than 5 ohms? **Yes** GO to Q5. **No** REPAIR the circuit between the MAP sensor electrical connector EN8 pin 1 (BW) and ECM electrical connector EN16 pin 127 (BW). For additional information, refer to the wiring diagrams. CLEAR the DTC. TEST the system for normal operation.
Q5: CHECK THE MAP SENSOR SIGNAL WIRE FOR SHORT TO GROUND	
	1 Disconnect the ECM electrical connector EN16.
	2 Disconnect the MAP sensor electrical connector EN8.
	3 Measure the resistance between EN8 pin 1 (BW) and GROUND.
	Is the resistance less than 10,000 ohms? **Yes** REPAIR the short to GROUND. For additional information, refer to the wiring diagrams. CLEAR the DTC. TEST the system for normal operation. (The fault could be in any of the components or sensors in the 5 volt supply circuit, or the ECM.) **No** GO to Q6.
Q6: CHECK THE MAP SENSOR SIGNAL WIRE FOR SHORT TO BATTERY	
	1 Connect the ECM electrical connector EN16.
	2 Turn the ignition switch to the ON position.
	3 Check for a voltage at EN8 pin 1 (BW).
	Is the voltage greater than 10 volts? **Yes** Repair the short circuit. For additional information, refer to the wiring diagrams. CLEAR the DTC. TEST the system for normal operation. (The fault could be in any of the components or sensors in the 5 volt supply circuit, or the ECM.) **No** INSTALL a new MAP sensor. CLEAR the DTC. TEST the system for normal operation.

PINPOINT TEST R : P0010, P1384. VVT RIGHT-HAND BANK	
TEST CONDITIONS	**DETAILS/RESULTS/ACTIONS**
R1: CHECK THE GROUND CIRCUIT TO THE RIGHT-HAND BANK VVT SOLENOID	
	1 Disconnect the VVT solenoid electrical connector EN61.
	2 Measure the resistance between the VVT solenoid electrical connector EN61 pin 2 (BG) and GROUND.

	Is the resistance less than 5 ohms? **Yes** GO to R2. **No** REPAIR the circuit between VVT solenoid electrical connector EN61 pin 2 (BG) and GROUND. For additional information, refer to wiring diagrams. CLEAR the DTC. TEST the system for normal operation.
R2: CHECK CONTINUITY OF THE RIGHT-HAND BANK VVT SOLENOID SIGNAL WIRE	
	1 Measure the resistance between VVT solenoid electrical connector EN61 pin 1 (RW) and ECM electrical connector EN16 pin 109 (RW).
	Is the resistance less than 5 ohms? **Yes** GO to R3. **No** REPAIR the circuit between VVT solenoid electrical connector EN61 pin 1 (RW) and ECM electrical connector EN16 pin 109 (RW). For additional information, refer to wiring diagrams. CLEAR the DTC. TEST the system for normal operation.
R3: CHECK FOR SHORT TO GROUND AT THE RIGHT-HAND BANK VVT SOLENOID SIGNAL WIRE	
	1 Disconnect the ECM electrical connector EN16.
	2 Measure the resistance between EN61 pin 1 (RW) and GROUND.
	Is the resistance less than 10,000 ohms? **Yes** REPAIR the short to GROUND. For additional information, refer to wiring diagrams. CLEAR the DTC. TEST the system for normal operation. **No** GO to R4.
R4: CHECK FOR SHORT TO BATTERY AT THE RIGHT-HAND BANK VVT SOLENOID SIGNAL WIRE	
	1 TURN the ignition switch to the ON position.
	2 Check for a voltage at EN61 pin 1 (RW).
	Is the voltage greater than 1 volt? **Yes** REPAIR the short circuit. For additional information, refer to wiring diagrams. CLEAR the DTC. TEST the system for normal operation. **No** INSTALL a new right-hand bank VVT solenoid. REFER to: Variable Camshaft Timing (VCT) Oil Control Solenoid (303-14A Electronic Engine Controls - 2.0L NA V6 - AJV6/2.5L NA V6 - AJV6/3.0L NA V6 - AJ27, Removal and Installation). CLEAR the DTC. TEST the system for normal operation.

PINPOINT TEST S : P0020, P1396. VVT LEFT-HAND BANK	
TEST CONDITIONS	**DETAILS/RESULTS/ACTIONS**
S1: CHECK GROUND CIRCUIT TO THE LEFT-HAND BANK VVT SOLENOID	
	1 Disconnect the VVT solenoid electrical connector, EN42.
	2 Measure the resistance between the VVT solenoid electrical connector EN42 pin 2 (BG) and GROUND.
	Is the resistance less than 5 ohms? **Yes** GO to S2. **No** REPAIR the circuit between VVT solenoid electrical connector EN42 pin 2 (BG) and GROUND. For additional information, refer to the wiring diagrams. CLEAR the DTC. TEST the system for normal operation.
S2: CHECK CONTINUITY OF THE LEFT-HAND BANK VVT SOLENOID SIGNAL WIRE.	
	1 Measure the resistance between VVT solenoid electrical connector EN42 pin 1 (G) and ECM electrical connector EN16 pin 110 (G).
	Is the resistance less than 5 ohms? **Yes** GO to S3. **No** REPAIR the circuit between VVT solenoid electrical connector EN42 pin 1 (G) and ECM electrical connector EN16 pin 110 (G). For additional information, refer to the wiring diagrams. CLEAR the DTC. TEST the system for normal operation.
S3: CHECK FOR SHORT TO GROUND AT THE LEFT-HAND BANK VVT SOLENOID SIGNAL WIRE	
	1 Disconnect the ECM electrical connector EN16.
	2 Measure the resistance between EN61 pin 1 (RW) and GROUND.
	Is the resistance less than 10,000 ohms? **Yes** REPAIR the short to GROUND. For additional information, refer to the wiring diagrams. CLEAR the DTC. TEST the system for normal operation. **No** GO to S4.
S4: CHECK FOR SHORT TO BATTERY AT THE LEFT-HAND BANK VVT SOLENOID SIGNAL WIRE	
	1 TURN the ignition switch to the ON position.
	2 Check for a voltage at EN61 pin 1 (RW).
	Is the voltage greater than 1 volt? **Yes** REPAIR the short circuit. For additional information, refer to the wiring diagrams. CLEAR the DTC. TEST the system for normal operation. **No** INSTALL a new left-hand bank VVT solenoid. REFER to: Variable Camshaft Timing (VCT) Oil Control Solenoid (303-14A Electronic Engine Controls - 2.0L NA V6 - AJV6/2.5L NA V6 - AJV6/3.0L NA V6 - AJ27, Removal and Installation). CLEAR the DTC. TEST the system for normal operation.

PINPOINT TEST T : P1251, P1631, P1657, P1658. THROTTLE MOTOR RELAY	
TEST CONDITIONS	**DETAILS/RESULTS/ACTIONS**
T1: CHECK THE POWER SUPPLY CIRCUIT TO THE THROTTLE MOTOR RELAY	
	1 Turn the ignition switch to the ON position.
	2 Measure the voltage between pin 1 of the throttle motor relay base and GROUND.

	Is the voltage greater than 10 volts? **Yes** GO to T2. **No** REPAIR the circuit between pin 1 of the throttle motor relay base and the EMS control relay. For additional information, refer to the wiring diagrams. CLEAR the DTC. TEST the system for normal operation.
T2: CHECK CONTINUITY OF THE THROTTLE MOTOR RELAY SIGNAL WIRE	
	1 Turn the ignition switch to the OFF position.
	2 Measure the resistance between the throttle motor relay base, pin 2 and the ECM electrical connector EN16 pin 52 (GR).
	Is the resistance less than 5 ohms? **Yes** GO to T3. **No** REPAIR the circuit between the throttle motor relay base pin 2 and the ECM electrical connector EN16 pin 52 (GR). For additional information, refer to the wiring diagrams. CLEAR the DTC. TEST the system for normal operation.
T3: CHECK THE THROTTLE MOTOR RELAY SIGNAL WIRE FOR SHORT TO BATTERY	
	1 Turn the ignition switch to the OFF position.
	2 Remove the throttle motor relay.
	3 Disconnect the ECM electrical connector EN16.
	4 Check for a voltage between the throttle motor relay base pin 2 and GROUND.
	Is the voltage greater than 1 volt? **Yes** REPAIR the short to battery. For additional information, refer to wiring diagrams. CLEAR the DTC. TEST the system for normal operation. **No** GO to T4.
T4: CHECK THE THROTTLE MOTOR RELAY SIGNAL WIRE FOR SHORT TO GROUND	
	1 Measure the resistance between the throttle motor relay base pin 2 and GROUND.
	Is the resistance less than 10,000 ohms? **Yes** REPAIR the short to GROUND. For additional information, refer to wiring diagrams. CLEAR the DTC. TEST the system for normal operation. **No** GO to T5.
T5: CHECK CONTINUITY OF THE THROTTLE MOTOR RELAY OUTPUT WIRE	
	1 Test for continuity between throttle motor relay base pin 5 and ECM electrical connector EN16 pin 134 (RW).
	Is the circuit continuous? **Yes** INSTALL a new throttle motor relay. CLEAR the DTC. TEST the system for normal operation. If the DTC is repeated, INSTALL a new ECM. REFER to: Engine Control Module (ECM) (303-14B Electronic Engine Controls - 2.0L Duratorq-TDCi/2.2L Duratorq-TDCi (110kW/150PS) - Puma, Removal and Installation). Before replacing a ECM, contact Dealer technical support. **No** REPAIR the circuit between throttle motor relay base pin 2 and ECM electrical connector EN16 pin 134 (RW). For additional information, refer to wiring diagrams. CLEAR the DTC. TEST the system for normal operation.
T6: CHECK THE THROTTLE MOTOR RELAY OUTPUT WIRE FOR SHORT TO BATTERY	
	1 Check for a voltage between the throttle motor relay base pin 5 and GROUND.
	Is the voltage greater than 1 volt? **Yes** REPAIR the short to battery. For additional information, refer to wiring diagrams. CLEAR the DTC. TEST the system for normal operation. **No** GO to T7.
T7: CHECK THE THROTTLE MOTOR RELAY OUTPUT WIRE FOR SHORT TO GROUND	
	1 Measure the resistance between the throttle motor relay base pin 5 and GROUND.
	Is the resistance less than 10,000 ohms? **Yes** REPAIR the short to GROUND. For additional information, refer to wiring diagrams. CLEAR the DTC. TEST the system for normal operation. **No** INSTALL a new throttle motor relay. For additional information, refer to the electrical guide. CLEAR the DTC. TEST the system for normal operation. If the DTC is repeated, INSTALL a new ECM. REFER to: Engine Control Module (ECM) (303-14B Electronic Engine Controls - 2.0L Duratorq-TDCi/2.2L Duratorq-TDCi (110kW/150PS) - Puma, Removal and Installation). Before replacing an ECM, contact dealer technical support.

PINPOINT TEST U : P1549. IMT VALVE 1	
TEST CONDITIONS	**DETAILS/RESULTS/ACTIONS**
U1: CHECK THE POWER SUPPLY CIRCUIT TO THE IMT VALVE 1	
	1 Turn the ignition switch to the ON position.
	2 Measure the voltage between IMT valve 1 electrical connector EN999 pin 1 (NG) and GROUND.
	Is the voltage greater than 10 volts? **Yes** GO to U2. **No** REPAIR the circuit between the IMT valve 1 electrical connector EN999 pin 1 (NG) and the Battery power bus 2. CLEAR the DTC. TEST the system for normal operation. (This circuit includes the power distribution fuse box and the EMS control relay. For additional information, refer to wiring diagrams.)
U2: CHECK CONTINUITY OF THE IMT VALVE 1 SIGNAL WIRE.	
	1 Disconnect the ECM electrical connector EN16.
	2 Measure the resistance between the IMT valve 1 electrical connector EN999 pin 2 (OY) and the ECM electrical connector EN16 pin 38 (OY).

	Is the resistance less than 5 ohms? **Yes** GO to U3. **No** REPAIR the circuit between the IMT valve 1 electrical connector EN999 pin 2 (OY) and the ECM electrical connector EN16 pin 38 (OY). For additional information, refer to wiring diagrams. CLEAR the DTC. TEST the system for normal operation.
U3: CHECK IMT VALVE SIGNAL WIRE FOR SHORT TO GROUND	
	1 Measure the resistance between EN999 pin 2 (OY) and GROUND.
	Is the resistance less than 10,000 ohms? **Yes** REPAIR the short to GROUND. For additional information, refer to wiring diagrams. CLEAR the DTC. TEST the system for normal operation. **No** GO to U4.
U4: CHECK IMT VALVE SIGNAL WIRE FOR SHORT TO BATTERY	
	1 Connect the ECM electrical connector EN16.
	2 Turn the ignition switch to the ON position.
	3 Check for a voltage at EN999 pin 2 (OY).
	Is the voltage greater than 10 volts? **Yes** REPAIR the short to battery. For additional information, refer to wiring diagrams. CLEAR the DTC. TEST the system for normal operation. **No** INSTALL a new IMT valve. CLEAR the DTC. TEST the system for normal operation. If the DTC is repeated, INSTALL a new ECM. REFER to: Engine Control Module (ECM) (303-14A Electronic Engine Controls - 2.0L NA V6 - AJV6/2.5L NA V6 - AJV6/3.0L NA V6 - AJ27, Removal and Installation). Before replacing an ECM, contact dealer technical support. CLEAR the DTC. TEST the system for normal operation.

PINPOINT TEST V : P1532. IMT VALVE 2	
TEST CONDITIONS	**DETAILS/RESULTS/ACTIONS**
V1: CHECK THE POWER SUPPLY CIRCUIT TO THE IMT VALVE 2	
	1 Turn the ignition switch to the ON position.
	2 Measure the voltage between IMT valve 2 electrical connector EN998 pin 1 (NG) and GROUND.
	Is the voltage greater than 10 volts? **Yes** GO to V2. **No** REPAIR the circuit between the IMT valve 2 electrical connector EN998 pin 1 (NG) and the Battery power bus 2. CLEAR the DTC. TEST the system for normal operation. (This circuit includes the power distribution fuse box and the EMS control relay. For additional information, refer to wiring diagrams.)
V2: CHECK CONTINUITY OF THE IMT VALVE 2 SIGNAL WIRE	
	1 Disconnect the ECM electrical connector EN16.
	2 Measure the resistance between the IMT valve 2 electrical connector EN998 pin 2 (OY) and the ECM electrical connector EN16 pin 39 (OY).
	Is the resistance less than 5 ohms? **Yes** GO to V3. **No** REPAIR the circuit between the IMT valve 2 electrical connector EN998 pin 2 (OY)and the ECM electrical connector EN16 pin 39 (OY). For additional information, refer to wiring diagrams. CLEAR the DTC. TEST the system for normal operation.
V3: CHECK IMT VALVE SIGNAL WIRE FOR SHORT TO GROUND	
	1 Measure the resistance between EN998 pin 2 (OY) and GROUND.
	Is the resistance less than 10,000 ohms? **Yes** REPAIR the short to GROUND. For additional information, refer to wiring diagrams. CLEAR the DTC. TEST the system for normal operation. **No** GO to V4.
V4: CHECK IMT VALVE SIGNAL WIRE FOR SHORT TO BATTERY	
	1 Connect the ECM electrical connector EN16.
	2 Turn the ignition switch to the ON position.
	3 Check for a voltage at EN998 pin 2 (OY).
	Is the voltage greater than 10 volts? **Yes** REPAIR the short to battery. For additional information, refer to wiring diagrams. CLEAR the DTC. TEST the system for normal operation. **No** INSTALL a new IMT valve. CLEAR the DTC. TEST the system for normal operation. If the DTC is repeated, INSTALL a new ECM. REFER to: Engine Control Module (ECM) (303-14A Electronic Engine Controls - 2.0L NA V6 - AJV6/2.5L NA V6 - AJV6/3.0L NA V6 - AJ27, Removal and Installation). Before replacing an ECM, contact dealer technical support.

PINPOINT TEST W : P1582. FLIGHT RECORDER DATA STORED	
TEST CONDITIONS	**DETAILS/RESULTS/ACTIONS**
W1: EXTRACT THE FLIGHT RECORDER DATA	
	• NOTE: Flight recorder data can only be extracted using the Jaguar approved diagnostic system, where available. 1 Connect the Jaguar approved diagnostic system, or code reader.
	Is DTC P1582 stored? **Yes** Refer to dealer technical support for information on extracting data. **No**

	Test not applicable.

PINPOINT TEST X : P1243. SENSOR GROUND CIRCUITS.	
TEST CONDITIONS	**DETAILS/RESULTS/ACTIONS**
X1: CHECK THE GROUND CIRCUIT TO THE ECT SENSOR	
	1 Measure the resistance between ECT sensor electrical connector EN18 pin 1 (BG) and GROUND.
	Is the resistance less than 5 ohms? **Yes** GO to X2. **No** REPAIR the circuit between the ECT sensor electrical connector EN18 pin 1 (BG) and GROUND. CLEAR the DTC. TEST the system for normal operation. (This circuit includes the ECM. For additional information, refer to wiring diagrams.)
X2: CHECK THE GROUND CIRCUIT TO THE EOT SENSOR	
	1 Measure the resistance between EOT sensor electrical connector EN25 pin 2 (BG) and GROUND.
	Is the resistance less than 5 ohms? **Yes** GO to X3. **No** REPAIR the circuit between the EOT sensor electrical connector EN25 pin 2 (BG) and GROUND. CLEAR the DTC. TEST the system for normal operation. (This circuit includes the ECM. For additional information, refer to wiring diagrams.)
X3: CHECK THE GROUND CIRCUIT TO THE IP SENSOR	
	1 Measure the resistance between IP sensor electrical connector IJ7 pin 2 (WG) and GROUND.
	Is the resistance less than 5 ohms? **Yes** GO to X4. **No** REPAIR the circuit between the IP sensor electrical connector IJ7 pin 2 (WG) and GROUND. CLEAR the DTC. TEST the system for normal operation. (This circuit includes the ECM. For additional information, refer to wiring diagrams.)
X4: CHECK THE GROUND CIRCUIT TO THE EFT SENSOR	
	1 Measure the resistance between EFT sensor electrical connector IJ8 pin 1 (NU) and GROUND.
	Is the resistance less than 5 ohms? **Yes** GO to X5. **No** REPAIR the circuit between the EFT sensor electrical connector IJ8 pin 1 (NU) and GROUND. CLEAR the DTC. TEST the system for normal operation. (This circuit includes the ECM. For additional information, refer to wiring diagrams.)
X5: CHECK THE GROUND CIRCUIT TO THE MAP SENSOR	
	1 Measure the resistance between MAP sensor electrical connector EN8 pin 4 (BG) and GROUND.
	Is the resistance less than 5 ohms? **Yes** GO to X6. **No** REPAIR the circuit between the MAP sensor electrical connector EN8 pin 4 (BG) and GROUND. CLEAR the DTC. TEST the system for normal operation. (This circuit includes the ECM. For additional information, refer to wiring diagrams.)
X6: CHECK THE GROUND CIRCUIT TO THE FTP SENSOR	
• NOTE: Access to the FTP sensor involves the removal of the fuel tank. To reduce the amount of work necessary, a slave harness could be used. This can be connected at the access port beneath the rear seat. Tests can then be carried out via the slave harness and sensor. If system operation is normal with the slave harness and sensor, the fault lies in the vehicle's harness or sensor.	
	1 Measure the resistance between FTP sensor electrical connector FT1 pin 3 (BG) and GROUND.
	Is the resistance less than 5 ohms? **Yes** GO to X7. **No** REPAIR the circuit between the FTP Sensor electrical connector FT1 pin 3 (BG) and GROUND. CLEAR the DTC. TEST the system for normal operation. (This circuit includes the ECM. For additional information, refer to wiring diagrams.)
X7: CHECK THE GROUND CIRCUIT TO THE APP SENSOR (TRACK 1)	
	1 Measure the resistance between APP sensor electrical connector PA1 pin 3 (BG) and GROUND.
	Is the resistance less than 5 ohms? **Yes** GO to X8. **No** REPAIR the circuit between the APP sensor electrical connector PA1 pin 3 (BG) and GROUND. CLEAR the DTC. TEST the system for normal operation. (This circuit includes the ECM. For additional information, refer to wiring diagrams.)
X8: CHECK THE GROUND CIRCUIT TO THE TP SENSOR	
	1 Measure the resistance between TP sensor electrical connector EN13 pin 1 (BG) and GROUND.
	Is the resistance less than 5 ohms? **Yes** GO to X9. **No** REPAIR the circuit between the TP sensor electrical connector EN13 pin 1 (BG) and GROUND. CLEAR the DTC. TEST the system for normal operation. (This circuit includes the ECM. For additional information, refer to wiring diagrams.)
X9: CHECK THE GROUND CIRCUIT TO THE APP SENSOR (TRACK 3)	
	1 Measure the resistance between APP sensor electrical connector PA1 pin 6 (BG) and GROUND.

	Is the resistance less than 5 ohms? **Yes** GO to X10. **No** REPAIR the circuit between the APP sensor electrical connector PA1 pin 6 (BG) and GROUND. CLEAR the DTC. TEST the system for normal operation. (This circuit includes the ECM. For additional information, refer to wiring diagrams.)
X10: CHECK THE GROUND CIRCUIT TO THE AIR CONDITIONING PRESSURE SENSOR	
	1 Measure the resistance between ACP sensor electrical connector JB106 pin 1 (BG) and GROUND.
	Is the resistance less than 5 ohms? **Yes** No electrical fault in ground circuit. Recheck DTCs. **No** REPAIR the circuit between the ACP sensor electrical connector JB106 pin 1 (BG) and GROUND. CLEAR the DTC. TEST the system for normal operation. (This circuit includes the ECM. For additional information, refer to wiring diagrams.)

PINPOINT TEST Y : P0480. RADIATOR COOLING FAN MODULE DRIVE

TEST CONDITIONS	DETAILS/RESULTS/ACTIONS
Y1: CHECK THE PULSE WIDTH MODULATED SIGNAL TO THE COOLING FAN MODULE	
	1 Disconnect the radiator cooling fan module electrical connector PWM1.
	2 RUN the engine to a temperature at which the cooling fans would operate.
	3 Using a suitable meter, test for a pulse width modulated signal at PWM1 pin 3 (WU).
	Is a PWM signal present? **Yes** INSTALL a new cooling fan module. CLEAR the DTC. TEST the system for normal operation. **No** GO to Y2.
Y2: CHECK CONTINUITY OF THE RADIATOR COOLING FAN MODULE SIGNAL WIRE	
	1 Turn the ignition switch to the OFF position.
	2 Disconnect the ECM electrical connector EN16.
	3 Measure the resistance between the radiator cooling fan module electrical connector PWM1 pin 3 (WU) and the ECM electrical connector EN16 pin 51 (WU).
	Is the resistance less than 5 ohms? **Yes** INSTALL a new ECM. REFER to: Engine Control Module (ECM) (303-14A Electronic Engine Controls - 2.0L NA V6 - AJV6/2.5L NA V6 - AJV6/3.0L NA V6 - AJ27, Removal and Installation). Before replacing an ECM, contact dealer technical support. **No** REPAIR the circuit between the radiator cooling fan module electrical connector PWM1 pin 3 (WU) and the ECM electrical connector EN16 pin 51 (WU). For additional information, refer to wiring diagrams. CLEAR the DTC. TEST the system for normal operation.

PINPOINT TEST Z : P0226, P0227, P0228. APP SENSOR (TRACK 1)

TEST CONDITIONS	DETAILS/RESULTS/ACTIONS
Z1: CHECK THE POWER SUPPLY CIRCUIT TO THE APP SENSOR. TRACK 1	
	1 Turn the ignition switch to the ON position.
	2 Measure the voltage between APP sensor electrical connector PA1 pin 2 (Y) and GROUND.
	Is the voltage greater than 4volts? **Yes** GO to Z2. **No** REPAIR the circuit between the APP sensor electrical connector PA1 pin 2 (Y) and the sensor 5 volt supply 2. CLEAR the DTC. TEST the system for normal operation. (This circuit includes the ECM, EMS control relay, and power distribution fuse box. For additional information, refer to wiring diagrams.)
Z2: CHECK THE GROUND CIRCUIT TO THE APP SENSOR	
	1 Turn the ignition switch to the OFF position.
	2 Disconnect APP Sensor electrical connector PA1.
	3 Measure the resistance between APP sensor electrical connector PA1 pin 6 (BG) and GROUND.
	Is the resistance less than 5 ohms? **Yes** GO to Z5. **No** REPAIR the circuit between the APP sensor electrical connector PA1 pin 6 (BG) and GROUND. CLEAR the DTC. TEST the system for normal operation. (This circuit includes the ECM. For additional information, refer to wiring diagrams.)
Z3: CHECK THE GROUND CIRCUIT TO THE APP SENSOR. FOR CONTINUITY	
	1 Disconnect the ECM electrical connector EN16.
	2 Disconnect the APP sensor electrical connector PA1.
	3 Measure the resistance between EN16 pin 20 (BG) and PA1 pin 6 (BG).
	Is the resistance less than 5 ohms? **Yes** GO to Z4. **No** REPAIR the circuit. For additional information, refer to wiring diagrams. CLEAR the DTC. TEST the system for normal operation.
Z4: CHECK THE GROUND CIRCUIT TO THE APP SENSOR. FOR SHORT TO BATTERY	
	1 Connect the ECM electrical connector EN16.
	2 Turn the ignition switch to the ON position.
	3 Check for a voltage at PA1 pin 6 (BG).

	Is the voltage greater than 1 volt? **Yes** REPAIR the short circuit. For additional information, refer to wiring diagrams. CLEAR the DTC. TEST the system for normal operation. **No** GO to Z5.
Z5: CHECK CONTINUITY OF THE APP SENSOR SIGNAL WIRE	
	1 Turn the ignition switch to the OFF position.
	2 Disconnect the APP sensor electrical connector PA1.
	3 Measure the resistance between APP sensor electrical connector PA1 pin 4 (R) and the ECM electrical connector EN16 pin 102 (R).
	Is the resistance less than 5 ohms? **Yes** GO to Z6. **No** REPAIR the circuit between the APP sensor electrical connector PA1 pin 4 (R) and the ECM electrical connector EN16 pin 102 (R). For additional information, refer to wiring diagrams. CLEAR the DTC. TEST the system for normal operation.
Z6: CHECK CONTINUITY OF THE APP SENSOR POTENTIOMETER	
	1 Measure the resistance between APP sensor electrical connector PA1 pins 4 and 6.
	2 Operate the accelerator pedal through it's full range while observing the resistance reading.
	Does the resistance vary as the pedal is operated? **Yes** INSTALL a new ECM. REFER to: Engine Control Module (ECM) (303-14A Electronic Engine Controls - 2.0L NA V6 - AJV6/2.5L NA V6 - AJV6/3.0L NA V6 - AJ27, Removal and Installation). Before replacing an ECM, contact dealer technical support. **No** INSTALL a new accelerator pedal position sensor, REFER to: Accelerator Pedal (310-02 Acceleration Control, Removal and Installation). CLEAR the DTC. TEST the system for normal operation.

PINPOINT TEST AA : P2122, P2123. APP SENSOR (TRACK 3)

TEST CONDITIONS	DETAILS/RESULTS/ACTIONS
AA1: CHECK THE POWER SUPPLY CIRCUIT TO THE APP SENSOR. TRACK 3	
	1 Turn the ignition switch to the ON position.
	2 Measure the voltage between APP sensor electrical connector PA1 pin 1 (Y) and GROUND.
	Is the voltage greater than 4 volts? **Yes** GO to AA2. **No** REPAIR the circuit between the APP sensor electrical connector PA1 pin 1 (Y) and the sensor 5 volt supply. CLEAR the DTC. TEST the system for normal operation. (This circuit includes the ECM, EMS control relay, and power distribution fuse box. For additional information, refer to wiring diagrams. This supply is also linked to other sensors. The fault could be in any of these or their wiring.)
AA2: CHECK THE GROUND CIRCUIT TO THE APP SENSOR	
	1 Turn the ignition switch to the OFF position.
	2 Disconnect the APP sensor electrical connector PA1.
	3 Measure the resistance between APP sensor electrical connector PA1 pin 3 (BG) and GROUND.
	Is the resistance less than 5 ohms? **Yes** GO to AA5. **No** REPAIR the circuit between the APP sensor electrical connector PA1 pin 3 (BG) and GROUND. CLEAR the DTC. TEST the system for normal operation. (This circuit includes the ECM. For additional information, refer to wiring diagrams.)
AA3: CHECK THE GROUND CIRCUIT TO THE APP SENSOR FOR CONTINUITY	
	1 Disconnect the ECM electrical connector EN16.
	2 Disconnect the APP sensor electrical connector PA1.
	3 Measure the resistance between EN16 pin 19 (BG) and PA1 pin 3 (BG).
	Is the resistance less than 5 ohms? **Yes** GO to AA4. **No** REPAIR the circuit. For additional information, refer to wiring diagrams. CLEAR the DTC. TEST the system for normal operation.
AA4: CHECK THE GROUND CIRCUIT TO THE APP SENSOR FOR SHORT TO BATTERY	
	1 Connect the ECM electrical connector EN16.
	2 Turn the ignition switch to the ON position.
	3 Check for a voltage at PA1 pin 3 (BG).
	Is the voltage greater than 1 volt? **Yes** REPAIR the short circuit. For additional information, refer to wiring diagrams. CLEAR the DTC. TEST the system for normal operation. **No** GO to AA5.
AA5: CHECK CONTINUITY OF THE APP SENSOR SIGNAL WIRE	
	1 Measure the resistance between APP sensor electrical connector PA1 pin 1 (Y) and the ECM electrical connector EN16 pin 103 (Y).
	Is the resistance less than 5 ohms? **Yes** GO to AA6. **No** REPAIR the circuit between the APP sensor electrical connector PA1 pin 1 (Y) and the ECM electrical connector EN16 pin 103 (Y). For additional information, refer to wiring diagrams. CLEAR the DTC. TEST the system for normal operation.

AA6: CHECK CONTINUITY OF THE APP SENSOR POTENTIOMETER	
	1 Measure the resistance between APP sensor electrical connector PA1 pins 1 and 3.
	2 Operate the accelerator pedal through it's full range while observing the resistance reading.
	Does the resistance vary as the pedal is operated? **Yes** INSTALL a new ECM. REFER to: Engine Control Module (ECM) (303-14A Electronic Engine Controls - 2.0L NA V6 - AJV6/2.5L NA V6 - AJV6/3.0L NA V6 - AJ27, Removal and Installation). Before replacing a ECM, contact Dealer technical support. **No** INSTALL a new accelerator pedal position sensor, REFER to: Accelerator Pedal (310-02 Acceleration Control, Removal and Installation). CLEAR the DTC. TEST the system for normal operation.

PINPOINT TEST AB : P0512, P1245. IGNITION SWITCH CRANK SIGNAL

WARNING: Make sure the starter motor does not engage in the course of these tests. Failure to follow these instructions may result in personal injury.

TEST CONDITIONS	DETAILS/RESULTS/ACTIONS
AB1: CHECK THE START INPUT TO THE ECM	
	1 Move the gear selector to the N position.
	2 Disconnect the ECM electrical connector EN16.
	3 Remove the starter relay from the power distribution fuse box.
	4 Turn the ignition switch to the CRANK position.
	5 Measure the voltage between EN16 pin 6 (Y) and GROUND.
	Is the voltage greater than 10 volts? **Yes** GO to AB2. **No** REPAIR the circuit between the ECM and the battery. For additional information, refer to wiring diagrams. CLEAR the DTC. TEST the system for normal operation. (This circuit includes the ignition switch and the power distribution fuse box. [Fuse 28].)
AB2: CHECK THE START INPUT TO THE STARTER RELAY	
	1 Turn the ignition switch to the START position and hold.
	2 Measure the voltage between the starter relay base (R10) pin 1 and GROUND.
	Is the voltage greater than 10 volts? **Yes** GO to AB3. **No** REPAIR the circuit between the starter relay base and the battery. For additional information, refer to wiring diagrams. CLEAR the DTC. TEST the system for normal operation. (This circuit includes the ignition switch and the power distribution fuse box.)
AB3: CHECK THE START INPUT WIRE FOR SHORT TO BATTERY AT ECM	
	1 Turn the ignition switch to the ON position.
	2 Measure the voltage between EN16 pin 6 (Y) and GROUND.
	Is the voltage greater than 10 volts? **Yes** REPAIR the short circuit. For additional information, refer to wiring diagrams. CLEAR the DTC. TEST the system for normal operation. **No** GO to AB4.
AB4: CHECK THE START INPUT WIRE FOR SHORT TO BATTERY AT RELAY	
	1 Turn the ignition switch to the ON position.
	2 Measure the voltage between the starter relay base pin 1 and GROUND.
	Is the voltage greater than 10 volts? **Yes** REPAIR the short circuit. For additional information, refer to wiring diagrams. CLEAR the DTC. TEST the system for normal operation. **No** GO to AB5.
AB5: CHECK THE STARTER RELAY INPUT FROM THE ECM FOR CONTINUITY	
	1 Measure the resistance between EN16 pin 41 (GO) and relay base pin 2.
	Is the resistance less than 5 ohms? **Yes** GO to AB6. **No** REPAIR the open circuit. For additional information, refer to wiring diagrams. CLEAR the DTC. TEST the system for normal operation.
AB6: CHECK THE STARTER RELAY INPUT FROM THE ECM FOR SHORT TO GROUND	
	1 Disconnect ignition switch electrical connector IP18.
	2 Measure the resistance between EN16 pin 41 (GO) and GROUND.
	Is the resistance less than 10,000 ohms? **Yes** REPAIR the short circuit. For additional information, refer to wiring diagrams. CLEAR the DTC. TEST the system for normal operation. **No** GO to AB7.
AB7: CHECK THE STARTER RELAY INPUT FROM THE ECM FOR SHORT TO BATTERY	
	1 Measure the voltage between the starter relay base pin 2 and GROUND.
	Is the voltage greater than 1 volt? **Yes** REPAIR the short circuit. For additional information, refer to wiring diagrams. CLEAR the DTC. TEST the system for normal operation. **No** INSTALL a new starter relay. For additional information, refer to wiring diagrams. CLEAR the DTC. TEST the system

	for normal operation. If the DTC is repeated, INSTALL a new ECM. REFER to: Engine Control Module (ECM) (303-14B Electronic Engine Controls - 2.0L Duratorq-TDCi/2.2L Duratorq-TDCi (110kW/150PS) - Puma, Removal and Installation). Before replacing an ECM, contact dealer technical support.

PINPOINT TEST AC : P0561, P0562, P0563. SENSOR POWER SUPPLY	
TEST CONDITIONS	**DETAILS/RESULTS/ACTIONS**
AC1: CHECK THE POWER SUPPLY CIRCUIT TO THE IP SENSOR	
	1 Disconnect the IP sensor electrical connector, IJ7.
	2 Turn the ignition switch to the ON position.
	3 Measure the voltage between IP sensor electrical connector IJ7 pin 1 (YG) and GROUND.
	Is the voltage greater than 4 volts? **Yes** GO to AC2. **No** REPAIR the circuit between the IP sensor electrical connector IJ7 pin 1 (YG) and the sensor 5 volt supply bus. CLEAR the DTC. TEST the system for normal operation. (The fault could be in any of the other sensors in this circuit, or in any of the spurs in this circuit. For additional information, refer to wiring diagrams.)
AC2: CHECK THE POWER SUPPLY CIRCUIT TO THE IP SENSOR FOR SHORT TO BATTERY	
	1 Measure the voltage between IP sensor electrical connector IJ7 pin 1 (YG) and GROUND.
	Is the voltage greater than 6 volts? **Yes** REPAIR the circuit between the IP sensor electrical connector IJ7 pin 1 (YG) and the sensor 5 volt supply bus. CLEAR the DTC. TEST the system for normal operation. (The short could be in any of the other sensors in this circuit, or in any of the spurs in this circuit. For additional information, refer to wiring diagrams.) **No** GO to AC3.
AC3: CHECK THE POWER SUPPLY CIRCUIT TO THE MAP SENSOR	
	1 Disconnect the MAP sensor electrical connector EN8.
	2 Turn the ignition switch to the ON position.
	3 Measure the voltage between MAP sensor electrical connector EN8 pin 2 (OY) and GROUND.
	Is the voltage greater than 4 volts? **Yes** GO to AC4. **No** REPAIR the circuit between the MAP sensor electrical connector EN8 pin 2 (OY) and the sensor 5 volt supply bus. CLEAR the DTC. TEST the system for normal operation. (The fault could be in any of the other sensors in this circuit, or in any of the spurs in this circuit. For additional information, refer to wiring diagrams.)
AC4: CHECK THE POWER SUPPLY CIRCUIT TO THE MAP SENSOR FOR SHORT TO BATTERY	
	1 Measure the voltage between MAP sensor electrical connector EN8 pin 2 (OY) and GROUND.
	Is the voltage greater than 6 volts? **Yes** REPAIR the circuit between the MAP sensor electrical connector EN8 pin 2 (OY) and the sensor 5 volt supply bus. CLEAR the DTC. TEST the system for normal operation. (The short could be in any of the other sensors in this circuit, or in any of the spurs in this circuit. For additional information, refer to wiring diagrams.) **No** GO to AC5.
AC5: CHECK THE POWER SUPPLY CIRCUIT TO THE FTP SENSOR	
• NOTE: Access to the FTP sensor involves the removal of the fuel tank. To reduce the amount of work necessary, a slave harness could be used. This can be connected at the access port beneath the rear seat. Tests can then be carried out via the slave harness and sensor. If system operation is normal with the slave harness and sensor, the fault lies in the vehicle's harness or sensor.	
	1 Disconnect the FTP sensor electrical connector FT1. (See note above).
	2 Turn the ignition switch to the ON position.
	3 Measure the voltage between FTP sensor electrical connector FT1 pin 1 (OY) and GROUND.
	Is the voltage greater than 4 volts? **Yes** GO to AC6. **No** REPAIR the circuit between the FTP sensor electrical connector FT1 pin 1 (OY) and the sensor 5 volt supply bus. CLEAR the DTC. TEST the system for normal operation. (The fault could be in any of the other sensors in this circuit, or in any of the spurs in this circuit. For additional information, refer to wiring diagrams.)
AC6: CHECK THE POWER SUPPLY CIRCUIT TO THE FTP SENSOR FOR SHORT TO BATTERY	
	1 Measure the voltage between FTP sensor electrical connector FT1 pin 1 (OY) and GROUND.
	Is the voltage greater than 6 volts? **Yes** REPAIR the circuit between the FTP sensor electrical connector FT1 pin 1 (OY) and the sensor 5 volt supply bus. CLEAR the DTC. TEST the system for normal operation. (The short could be in any of the other sensors in this circuit, or in any of the spurs in this circuit. For additional information, refer to wiring diagrams.) **No** GO to AC7.
AC7: CHECK THE POWER SUPPLY CIRCUIT TO THE APP SENSOR	
	1 Disconnect the APP sensor electrical connector.
	2 Turn the ignition switch to the ON position.
	3 Measure the voltage between APP sensor electrical connector PA1 pin 5 (OY) and GROUND.
	Is the voltage greater than 4 volts? **Yes** GO to AC8. **No** REPAIR the circuit between the APP sensor electrical connector PA1 pin 5 (OY) and the sensor 5 volt supply bus. CLEAR the DTC. TEST the system for normal operation. (The fault could be in any of the other sensors in this circuit, or in any of the spurs in this circuit. For additional information, refer to wiring diagrams.)
AC8: CHECK THE POWER SUPPLY CIRCUIT TO THE APP SENSOR FOR SHORT TO BATTERY	

	1 Measure the voltage between APP sensor electrical connector PA1 pin 5 (OY) and GROUND.
	Is the voltage greater than 6 volts? **Yes** REPAIR the circuit between the APP sensor electrical connector PA1 pin 5 (OY) and the sensor 5 volt supply bus. CLEAR the DTC. TEST the system for normal operation. (The short could be in any of the other sensors in this circuit, or in any of the spurs in this circuit. For additional information, refer to wiring diagrams.) **No** GO to AC9.
AC9: CHECK THE POWER SUPPLY CIRCUIT TO THE TP SENSOR	
	1 Turn the ignition switch to the ON position.
	2 Measure the voltage between TP sensor electrical connector EN13 pin 2 (OY) and GROUND.
	Is the voltage greater than 4 volts? **Yes** GO to AC10. **No** REPAIR the circuit between the TP sensor electrical connector EN13 pin 2 (OY) and the sensor 5 volt supply bus. CLEAR the DTC. TEST the system for normal operation. (The fault could be in any of the other sensors in this circuit, or in any of the spurs in this circuit. For additional information, refer to wiring diagrams.)
AC10: CHECK THE POWER SUPPLY CIRCUIT TO THE TP SENSOR FOR SHORT TO BATTERY	
	1 Measure the voltage between TP sensor electrical connector EN13 pin 2 (OY) and GROUND.
	Is the voltage greater than 6 volts? **Yes** REPAIR the circuit between the TP sensor electrical connector EN13 pin 2 (OY) and the sensor 5 volt supply bus. CLEAR the DTC. TEST the system for normal operation. (The short could be in any of the other sensors in this circuit, or in any of the spurs in this circuit. For additional information, refer to wiring diagrams.) **No** GO to AC11.
AC11: CHECK THE POWER SUPPLY CIRCUIT TO THE AIR CONDITIONING PRESSURE (ACP) SENSOR	
	1 Turn the ignition switch to the ON position.
	2 Measure the voltage between ACP sensor electrical connector JB106 pin 2 (OY) and GROUND.
	Is the voltage greater than 4 volts? **Yes** GO to AC12. **No** REPAIR the circuit between the ACP sensor electrical connector JB106 pin 2 (OY) and the sensor 5 volt supply bus. CLEAR the DTC. TEST the system for normal operation. (The fault could be in any of the other sensors in this circuit, or in any of the spurs in this circuit. For additional information, refer to wiring diagrams.)
AC12: CHECK THE POWER SUPPLY CIRCUIT TO THE AIR CONDITIONING PRESSURE SENSOR FOR SHORT TO BATTERY	
	1 Measure the voltage between ACP sensor electrical connector JB106 pin 2 (OY) and GROUND.
	Is the voltage greater than 6 volts? **Yes** REPAIR the circuit between the ACP sensor electrical connector JB106 pin 2 (OY) and the sensor 5 volt supply bus. CLEAR the DTC. TEST the system for normal operation. (The short could be in any of the other sensors in this circuit, or in any of the spurs in this circuit. For additional information, refer to wiring diagrams.) **No** No electrical fault in power supply circuit. Recheck DTCs using the Jaguar approved diagnostic system, or code reader. (This fault could also be a PSV failure within the ECM.)

PINPOINT TEST AD : P0851, P0852. P/N SWITCH STARTING/DRIVING MALFUNCTIONS.

TEST CONDITIONS	DETAILS/RESULTS/ACTIONS
AD1: CHECK THE P/N INPUT TO THE ECM.	
	1 Select PARK.
	2 Set the ignition switch to the ON position.
	3 Measure the voltage at the ECM electrical connector EN16 pin 31 (B).
	Is the voltage greater than 10 volts? **Yes** INSTALL a new ECM. REFER to: Engine Control Module (ECM) (303-14A Electronic Engine Controls - 2.0L NA V6 - AJV6/2.5L NA V6 - AJV6/3.0L NA V6 - AJ27, Removal and Installation). Before replacing a ECM, contact Dealer technical support. **No** REPAIR the circuit between the ECM electrical connector EN16 pin 31 (B) and the ignition switch. For additional information, refer to wiring diagrams. CLEAR the DTC. TEST the system for normal operation. (On automatic transmission vehicles, this circuit includes the TR sensor, central junction fuse box, ignition relay, and inertia switch. On NAS manual transmission vehicles, this circuit also includes the clutch safety switch.)

PINPOINT TEST AE : P0646, P0647. AIR CONDITIONING CLUTCH RELAY DRIVE

TEST CONDITIONS	DETAILS/RESULTS/ACTIONS
AE1: CHECK THE GROUND SUPPLY TO THE AIR CONDITIONING CLUTCH	
WARNING: This test involves working in proximity to rotating parts. Make sure due care is exercised.	
	1 Turn the ignition switch to the ON position.
	2 Disconnect the ECM electrical connector EN16.
	3 Disconnect the air conditioning clutch electrical connector EN30.
	4 Measure the resistance between EN30 pin 2 (B) and GROUND.

	Is the resistance less than 5 ohms? **Yes** REPAIR the circuit between EN30 pin 2 (B) and GROUND. For additional information, refer to wiring diagrams. CLEAR the DTC. TEST the system for normal operation. **No** GO to AE2.
AE2: CHECK THE CIRCUIT INTEGRITY BETWEEN THE ECM AND THE AIR CONDITIONING CLUTCH	
	1 Apply a GROUND to the disconnected ECM electrical connector EN16 pin 34 (BG).
	2 Measure the voltage at air conditioning clutch electrical connector EN30 pin 1 (RG).
	Is the voltage greater than 10 volts? **Yes** GO to AE3. **No** GO to AE4.
AE3: CHECK THE AIR CONDITIONING CLUTCH RELAY TO ECM CIRCUIT FOR SHORT TO GROUND	
	1 Measure the resistance between EN16 pin 34 (BG) and GROUND.
	Is the resistance less than 10,000 ohms? **Yes** GO to AE4. **No** INSTALL a new air conditioning compressor clutch relay. For additional information, refer to the electrical guide. CLEAR the DTC. TEST the system for normal operation. If the DTC is repeated, INSTALL a new ECM. REFER to: Engine Control Module (ECM) (303-14A Electronic Engine Controls - 2.0L NA V6 - AJV6/2.5L NA V6 - AJV6/3.0L NA V6 - AJ27, Removal and Installation). Before replacing an ECM, contact dealer technical support.
AE4: CHECK THE CIRCUIT BETWEEN THE AIR CONDITIONING COMPRESSOR CLUTCH AND THE RELAY FOR SHORT TO BATTERY	
	1 Measure the voltage between EN30 pin 1 (RG) and GROUND.
	Is the voltage greater than 1 volt? **Yes** REPAIR the short circuit. For additional information, refer to wiring diagrams. CLEAR the DTC. TEST the system for normal operation. **No** GO to AE5.
AE5: CHECK THE CIRCUIT BETWEEN THE AIR CONDITIONING COMPRESSOR CLUTCH AND THE ACCC RELAY FOR SHORT TO GROUND	
	1 Measure the resistance between EN30 pin 1 (RG) and GROUND.
	Is the resistance less than 10,000 ohms? **Yes** REPAIR the short circuit. For additional information, refer to wiring diagrams. CLEAR the DTC. TEST the system for normal operation. **No** GO to AE6.
AE6: CHECK THE CIRCUIT BETWEEN FUSE 23 OF THE POWER DISTRIBUTION FUSE BOX AND THE ACCC RELAY FOR SHORT TO GROUND	
	1 Remove Fuse 23.
	2 Measure the resistance between fuse box electrical connector JB34 pin 79 and GROUND.
	Is the resistance less than 10,000 ohms? **Yes** REPAIR the short circuit. For additional information, refer to wiring diagrams. CLEAR the DTC. TEST the system for normal operation. **No** GO to AE7.
AE7: CHECK THE ACCC RELAY BASE FOR BATTERY VOLTAGE AT PIN 3	
	1 Refit Fuse 23.
	2 Measure the voltage between the ACCC relay base pin 3 and GROUND.
	Is the voltage greater than 10 volts? **Yes** GO to AE8. **No** Check/replace fuses. REPAIR the circuit between the relay base and the battery power bus 1. For additional information, refer to wiring diagrams. CLEAR the DTC. TEST the system for normal operation.
AE8: CHECK THE CIRCUIT BETWEEN PIN 1 OF THE ACCC RELAY BASE AND THE POWER DISTRIBUTION FUSE BOX FOR SHORT TO GROUND	
	1 Remove Fuse 36.
	2 Measure the resistance between the ACCC relay base pin 1 and GROUND.
	Is the resistance less than 10,000 ohms? **Yes** REPAIR the short circuit. For additional information, refer to wiring diagrams. CLEAR the DTC. TEST the system for normal operation. **No** GO to AE9.
AE9: CHECK THE ACCC RELAY BASE FOR BATTERY VOLTAGE AT PIN 1	
	1 Refit Fuse 36.
	2 Turn the ignition switch to the ON position.
	3 Measure the voltage between ACCC relay base pin 1 and GROUND.
	Is the voltage greater than 10 volts? **Yes** GO to AE10. **No** Check/replace fuses. REPAIR the circuit between the relay base and the battery power bus 2. For additional information, refer to wiring diagrams. CLEAR the DTC. TEST the system for normal operation. (This circuit includes the EMS relay, and Fuses 9 and 31)
AE10: CHECK THE CIRCUIT BETWEEN THE ECM AND THE ACCC RELAY BASE FOR CONTINUITY	
	1 Remove the ACCC relay.
	2 Measure the resistance between the ECM electrical connector EN16 pin 34 (BG) and ACCC relay base pin 2.

	Is the resistance less than 5 ohms? **Yes** GO to AE11. **No** REPAIR the circuit. For additional information, refer to wiring diagrams. CLEAR the DTC. TEST the system for normal operation.
AE11: CHECK THE CIRCUIT BETWEEN THE ECM AND THE ACCC RELAY BASE FOR SHORT TO BATTERY	
	1 Check for a voltage between the ECM electrical connector EN16 pin 34 (BG) and GROUND.
	Is the voltage greater than 1 volt? **Yes** REPAIR the short circuit. For additional information, refer to wiring diagrams. CLEAR the DTC. TEST the system for normal operation. **No** GO to AE12.
AE12: CHECK THE CIRCUIT BETWEEN THE ECM AND THE ACCC RELAY BASE FOR SHORT TO GROUND	
	1 Measure the resistance between the ECM electrical connector EN16 pin 34 (BG) and GROUND.
	Is the resistance less than 10,000 ohms? **Yes** REPAIR the short circuit. For additional information, refer to wiring diagrams. CLEAR the DTC. TEST the system for normal operation. **No** INSTALL a new ACCC relay. For additional information, refer to the electrical guide. CLEAR the DTC. TEST the system for normal operation.

Published: 11-May-2011

Electronic Engine Controls - 2.0L NA V6 - AJV6 / 2.5L NA V6 - AJV6 / 3.0L NA V6 - AJ27 - Powertrain Control Module (PCM) Long Drive Cycle Self-Test

General Procedures

WARNING: Where possible, all road tests should be on well surfaced and dry roads. Always comply with speed limits and local traffic regulations.

• NOTE: This procedure is an overcheck only. If fault codes are found, interrogation of the relevant system must be carried out and claimed against.

• NOTE: The vehicle must exceed 50mph (80 km/h) during the road test.

1. Connect the diagnostic equipment to the vehicle.

2. Follow on screen prompts and check for engine management fault codes.

3. Clear the fault codes following the on screen procedure.

4. Disconnect the diagnostic equipment from the vehicle.

5. NOTE: Make sure cruise control is not engaged.

Make sure the engine temperature is above 60 ºC (140 ºF).

Carry out a road test and perform the following operations.

1. Accelerate to 55 mph (88 km/h) in 5th gear and cruise for 2 minutes with the engine speed at or above 1800rpm.
2. Lift off the throttle and allow the vehicle to decelerate until the engine speed is less than 1000 rpm.
3. Stop the vehicle.
4. Release brake, allow the vehicle to move with no throttle for 1 minute.
5. Road test is now complete.

6. Connect the diagnostic equipment to the vehicle.

7. NOTE: If fault codes are found, interrogation of the relevant system must be carried out and claimed against.

Follow on screen prompts and check for engine management fault codes.

8. Disconnect the diagnostic equipment from the vehicle.

Published: 11-May-2011

Electronic Engine Controls - 2.0L NA V6 - AJV6 / 2.5L NA V6 - AJV6 / 3.0L NA V6 - AJ27 - Powertrain Control Module (PCM) Short Drive Cycle Self-Test

General Procedures

• NOTE: This procedure is an overcheck only. If fault codes are found, interrogation of the relevant system must be carried out and claimed against.

1. Connect the diagnostic equipment to the vehicle.
2. Follow on screen prompts and check for engine management fault codes.
3. Clear the fault codes following the on screen procedure.
4. Start the engine.
   - Allow the engine to idle for 30 seconds.
   - Raise the engine speed to 1500 rpm and hold for 3 minutes until a temperature of 70°C (158 °F) is achieved.
   - Allow the engine to idle for 30 seconds.
   - Switch off the engine.
5. NOTE: If fault codes are found, interrogation of the relevant system must be carried out and claimed against.

   Follow on screen prompts and check for engine management fault codes.
6. Disconnect the diagnostic equipment from the vehicle.

Electronic Engine Controls - 2.0L NA V6 - AJV6 / 2.5L NA V6 - AJV6 / 3.0L NA V6 - AJ27 - Camshaft Position (CMP) Sensor

Removal and Installation

Removal

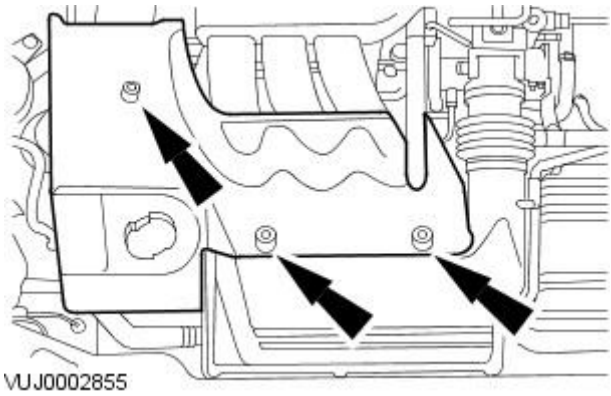

1. Remove the engine cover.

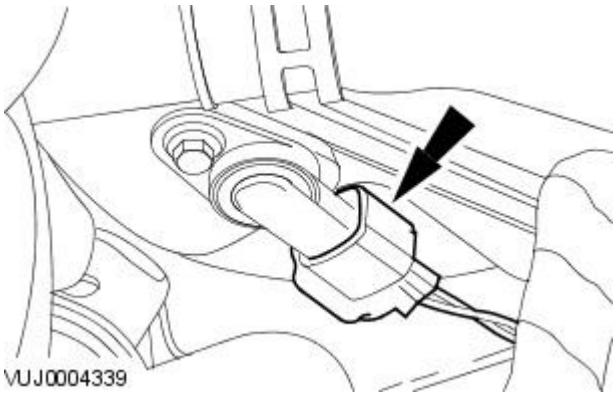

2. Disconnect the CMP sensor electrical connector.

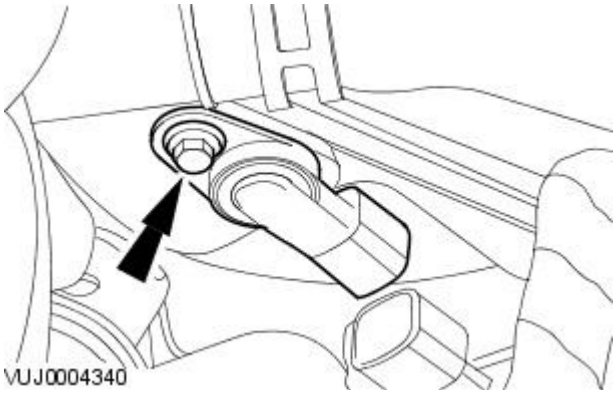

3. Remove the CMP sensor.

- Remove and discard the O-ring seal.

Installation

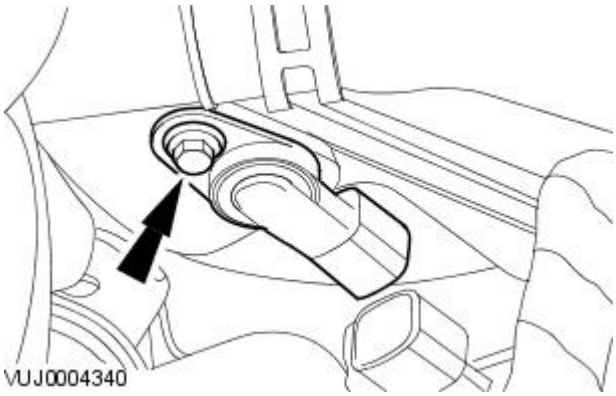

1. NOTE: Install a new O-ring seal.

To install, reverse the removal procedure.

- Tighten to 7 Nm.

Electronic Engine Controls - 2.0L NA V6 - AJV6 / 2.5L NA V6 - AJV6 / 3.0L NA V6 - AJ27 - Catalyst Monitor Sensor LH

Removal and Installation

Removal

1. Disconnect the battery ground cable.
   For additional information, refer to: Battery Disconnect and Connect (414-01 Battery, Mounting and Cables, General Procedures).
2. Raise and support the vehicle. For additional information, refer to For additional information, refer to: Jacking (100-02 Jacking and Lifting, Description and Operation).
   .
3. Detach the catalyst monitor sensor harness from the securing clip.

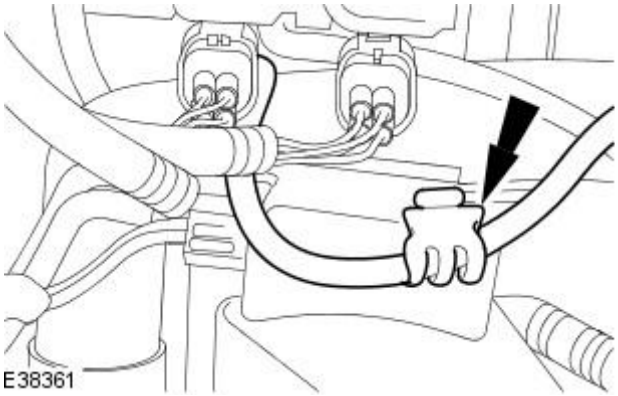

4. Disconnect the catalyst monitor sensor electrical connector.

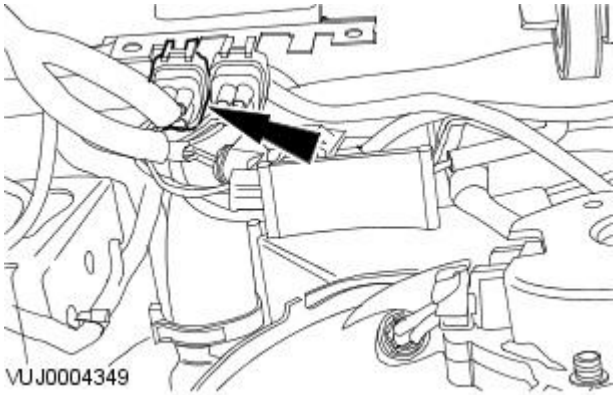

5. Detach the catalyst monitor sensor electrical connector from the securing bracket.
   1. Release the retaining tang.
   2. Detach the catalyst monitor sensor electrical connector from the securing bracket.

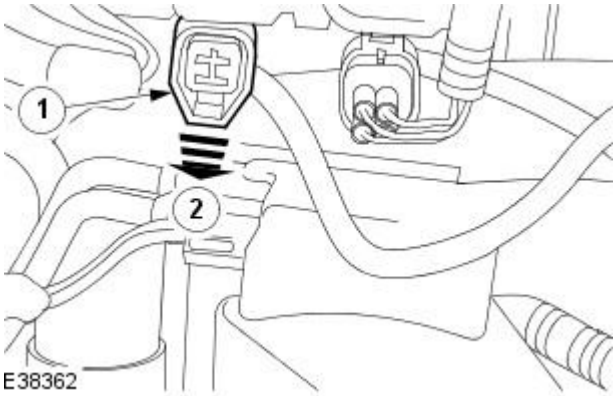

6. CAUTIONS:

   Do not cut the HO2S harness.

   Make sure that the catalyst monitor sensor casing and harness is not damaged.

   Using Snap-on socket S6176 remove the catalyst monitor sensor.

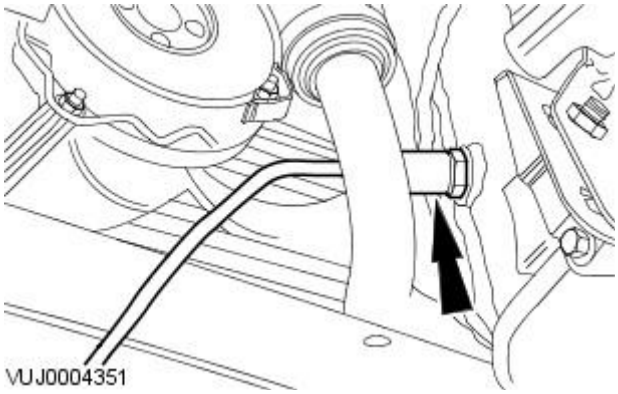

Installation

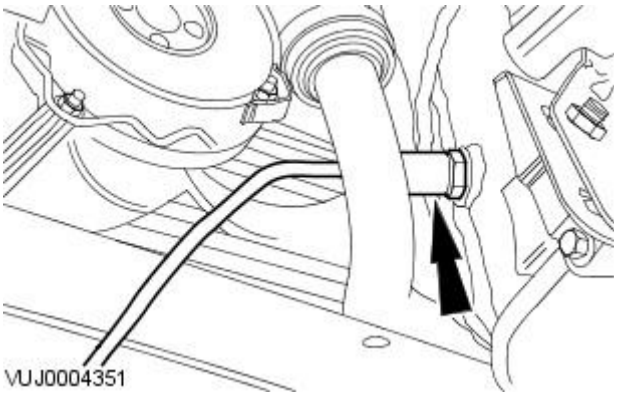

1. CAUTION: Make sure that the catalyst monitor sensor casing and cable are not damaged.

To install, reverse the removal procedure.

- Tighten to 40 Nm.

2. NOTE: For NAS vehicles only.

If required, carry out a long drive cycle.
For additional information, refer to: Powertrain Control Module (PCM) Long Drive Cycle Self-Test (303-14A Electronic Engine Controls - 2.0L NA V6 - AJV6/2.5L NA V6 - AJV6/3.0L NA V6 - AJ27, General Procedures).

Electronic Engine Controls - 2.0L NA V6 - AJV6 / 2.5L NA V6 - AJV6 / 3.0L NA V6 - AJ27 - Catalyst Monitor Sensor RH

Removal and Installation

Removal

1. Disconnect the battery ground cable.
   For additional information, refer to: Battery Disconnect and Connect (414-01 Battery, Mounting and Cables, General Procedures).
2. Remove the intake manifold.
   For additional information, refer to: Intake Manifold (303-01B Engine - 2.0L Duratorq-TDCi/2.2L Duratorq-TDCi (110kW/150PS) - Puma, In-vehicle Repair).
3. Raise and support the vehicle. For additional information, refer to
   For additional information, refer to: Lifting (100-02 Jacking and Lifting, Description and Operation).
   .
4. Undo and remove the exhaust shield securing bolt to allow access to the catalyst monitor sensor.

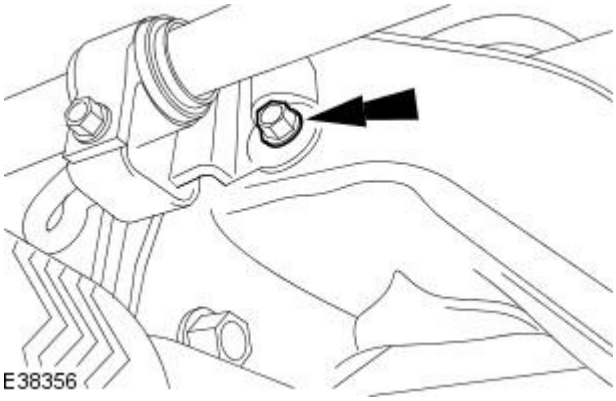

5. Lower the vehicle.
6. Disconnect the catalyst monitor sensor electrical connector.

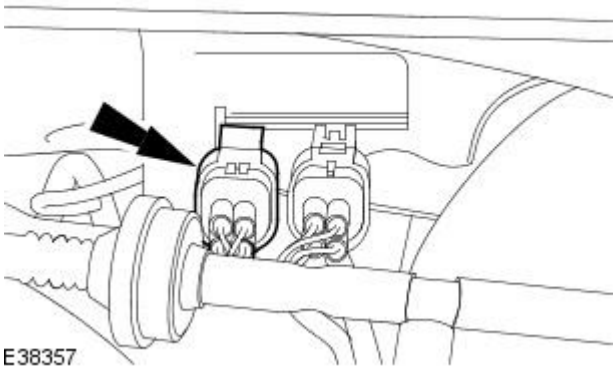

7. Detach the catalyst monitor sensor electrical connector from the securing bracket.
   1. Release the retaining tang.
   2. Detach the catalyst monitor sensor electrical connector from the securing bracket.

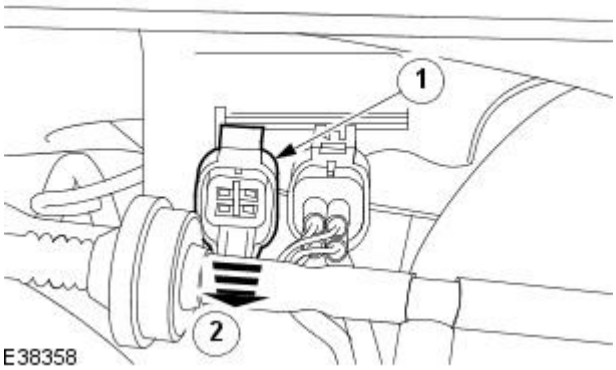

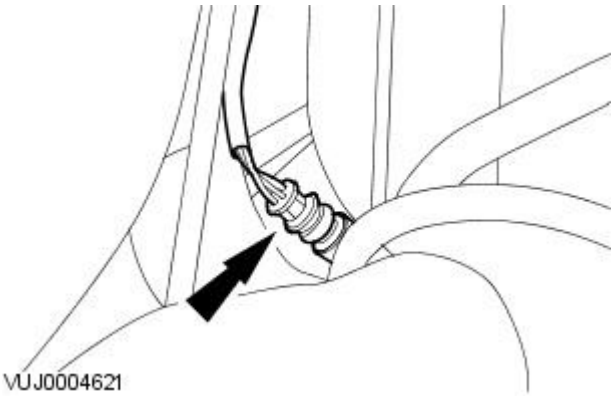

8. CAUTIONS:

Do not cut the HO2S harness.

Make sure that the catalyst monitor sensor casing and cable are not damaged.

Using Snap-on socket YA8875 remove the catalyst monitor sensor.

Installation

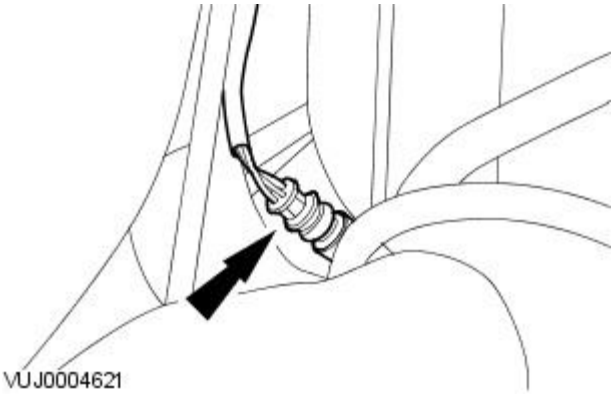

1. CAUTION: Make sure that the catalyst monitor sensor casing and cable are not damaged.

To install, reverse the removal procedure.

- Tighten to 40 Nm.

2. NOTE: For NAS vehicles only.

If required, carry out a long drive cycle.
For additional information, refer to: Powertrain Control Module (PCM) Long Drive Cycle Self-Test (303-14A Electronic Engine Controls - 2.0L NA V6 - AJV6/2.5L NA V6 - AJV6/3.0L NA V6 - AJ27, General Procedures).

Electronic Engine Controls - 2.0L NA V6 - AJV6 / 2.5L NA V6 - AJV6 / 3.0L NA V6 - AJ27 - Crankshaft Position (CKP) Sensor

Removal and Installation

Removal

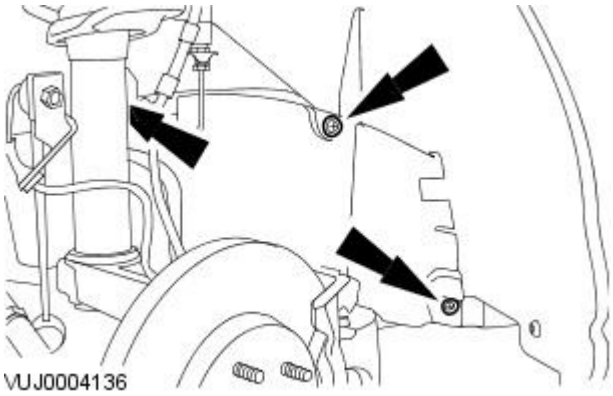

1. Remove the right-hand front road wheel. For additional information, refer to Section 204-04 Wheels and Tires.
2. Remove the wheel arch liner access cover.

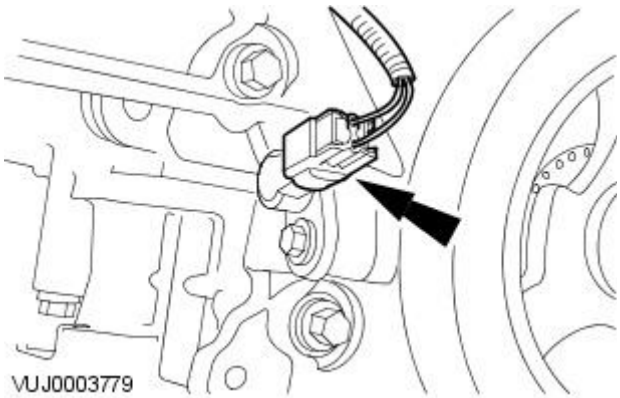

3. Disconnect the CKP sensor electrical connector.

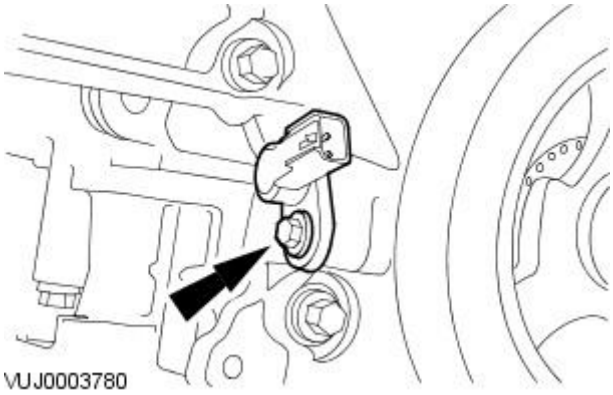

4. Remove the CKP sensor.
   - Remove and discard the O-ring seal.

Installation

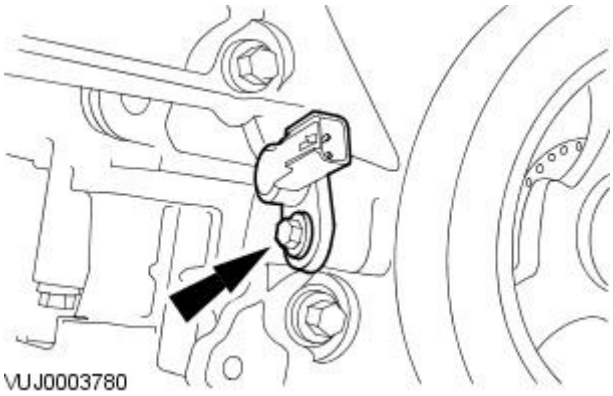

1. NOTE: Install a new O-ring seal.

   To install, reverse the removal procedure.
   - Tighten to 10 Nm.

Electronic Engine Controls - 2.0L NA V6 - AJV6 / 2.5L NA V6 - AJV6 / 3.0L NA V6 - AJ27 - Engine Control Module (ECM)

Removal and Installation

Removal

1. Disconnect the battery ground cable. For additional information, refer to For additional information, refer to: Battery Disconnect and Connect (414-01 Battery, Mounting and Cables, General Procedures).
2. Remove the engine wiring harness trim panel.

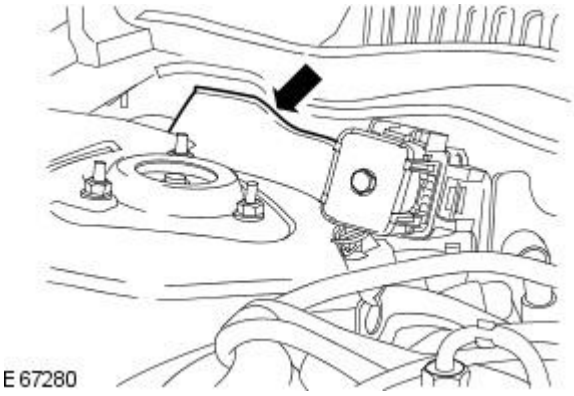

3. Disconnect the engine control module (ECM) electrical connector.

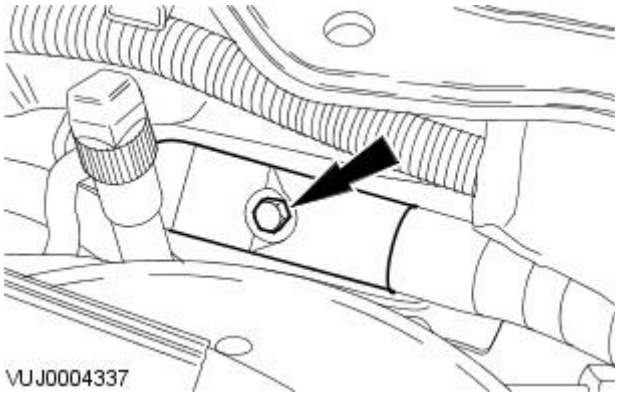

4. Remove the instrument cluster lower trim panel.

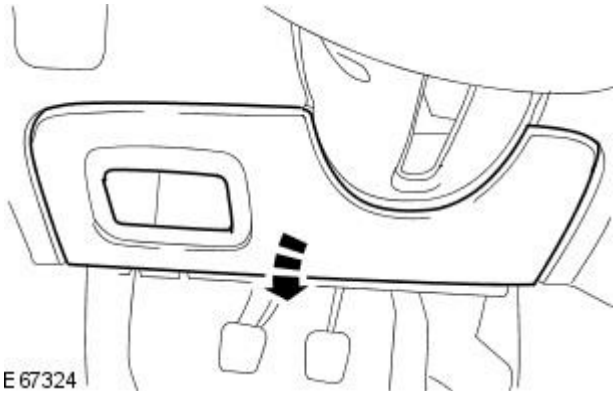

5. Remove the trim panel.

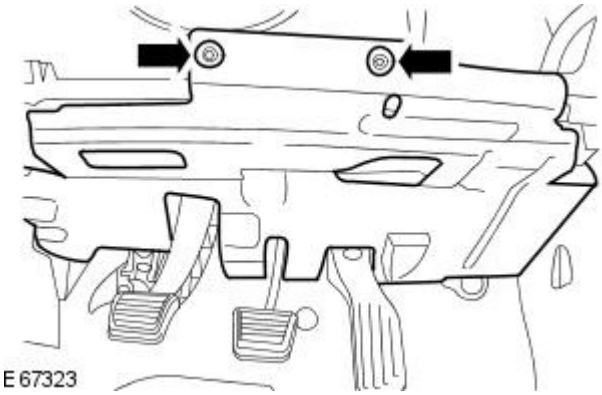

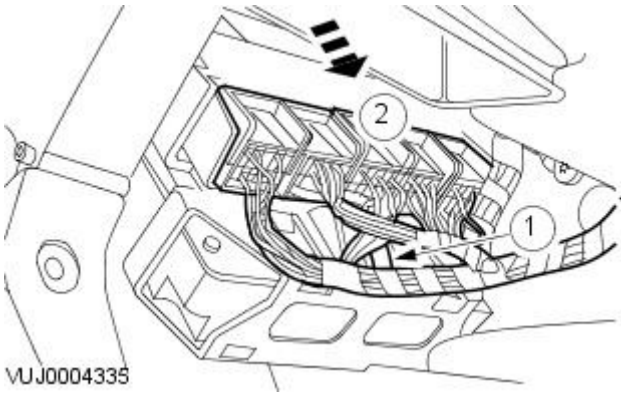

6. Detach the generic electronic module (GEM) from the ECM.

1. Release the GEM locking tang.
2. Detach the GEM from the ECM.

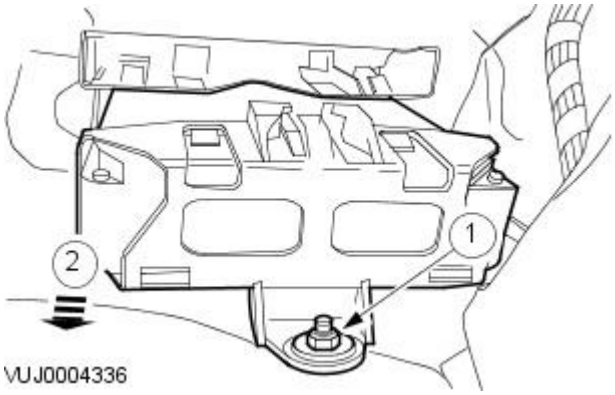

7. Remove the ECM.

1. Remove the ECM retaining nut.
2. Remove the ECM.

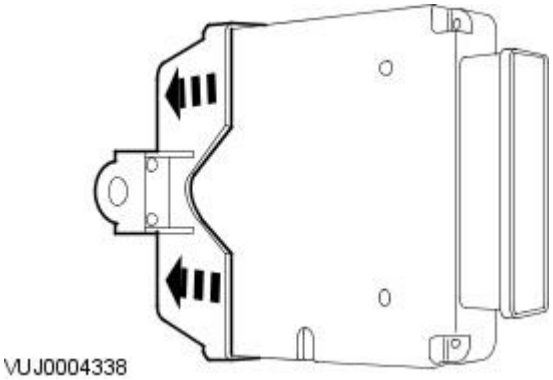

8. Remove the ECM from the ECM retaining bracket.

Installation

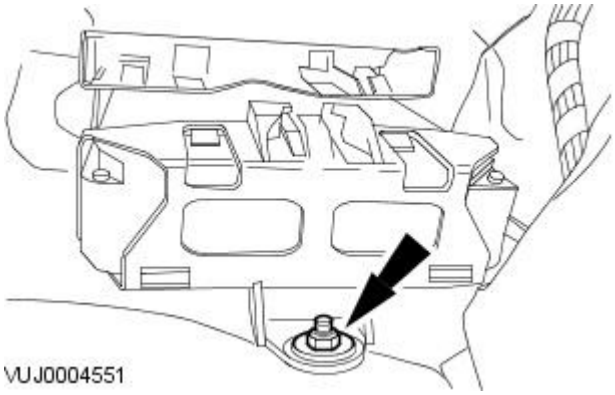

1. To install, reverse the removal procedure.

- Tighten to 10 Nm.

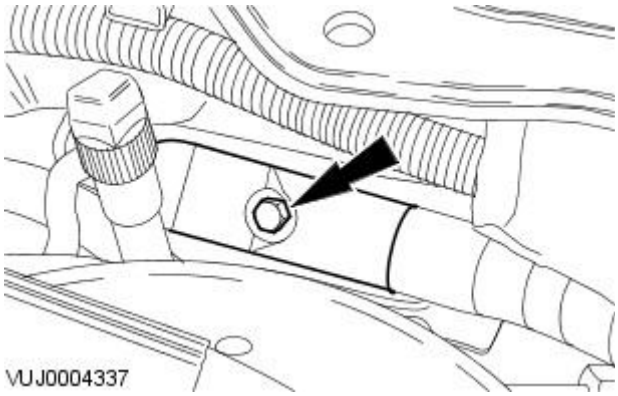

2. CAUTION: Make sure that the electrical connector locates correctly in the ECM. Do not force or overtighten the electrical connector.

Tighten to 10 Nm.

Published: 11-May-2011

Electronic Engine Controls - 2.0L NA V6 - AJV6 / 2.5L NA V6 - AJV6 / 3.0L NA V6 - AJ27 - Fuel Temperature Sensor2.5L NA V6 - AJV6 / 3.0L NA V6 - AJ27

Removal and Installation

Special Tool(s)	
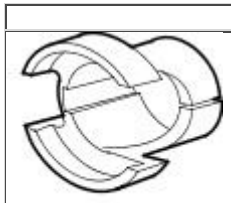 310045	Quick fit connector releasing tool 310-045

Removal

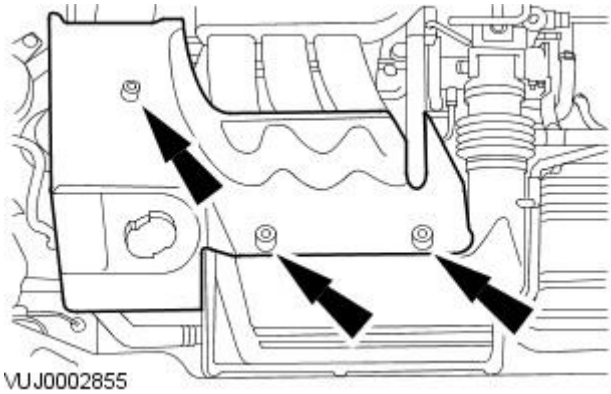

1. Remove the engine cover.

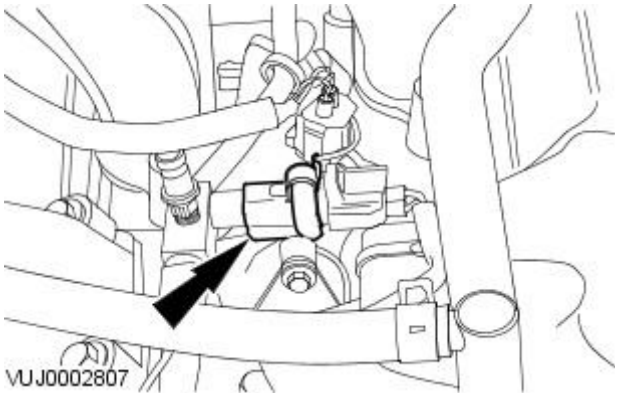

2. Remove the retaining clip from the spring lock coupling.

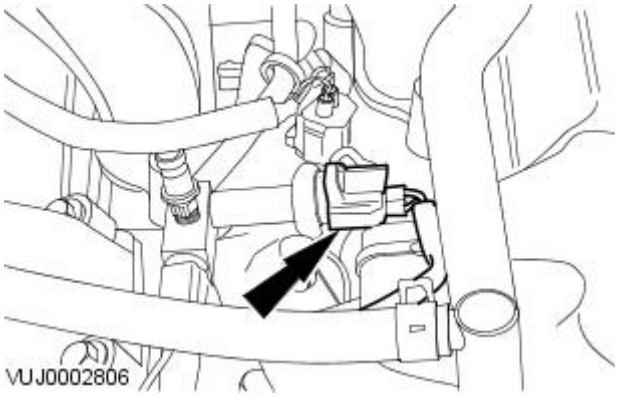

3. Disconnect the fuel temperature sensor electrical connector.

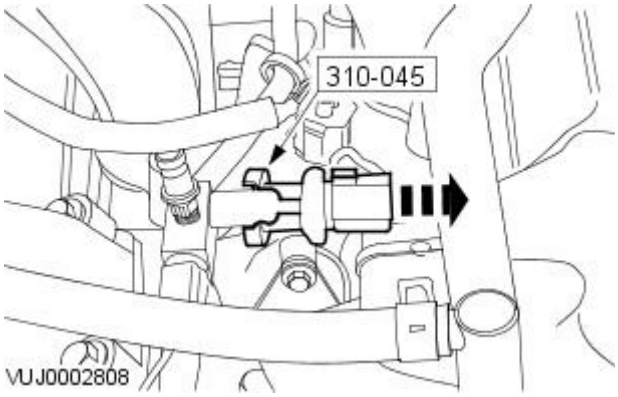

4. Using the special tool, remove the fuel temperature sensor.

- Remove and discard the O-ring seal.

Installation

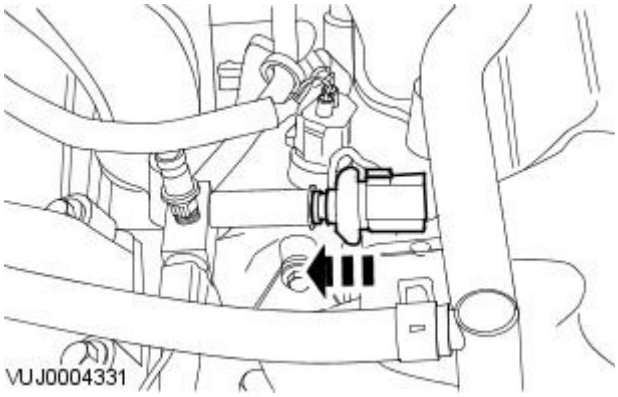

1. NOTE: Install a new O-ring seal.

Install the fuel temperature sensor.

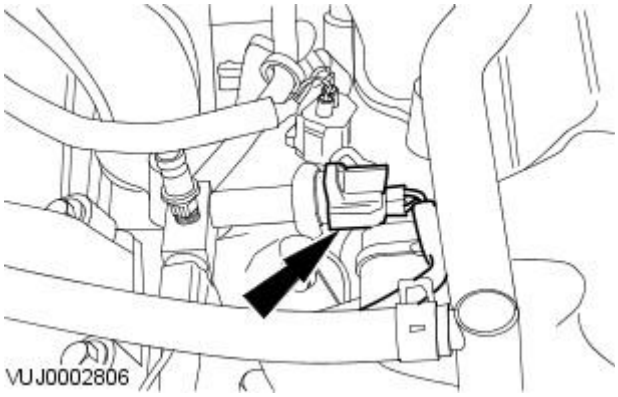

2. Connect the fuel temperature sensor electrical connector.

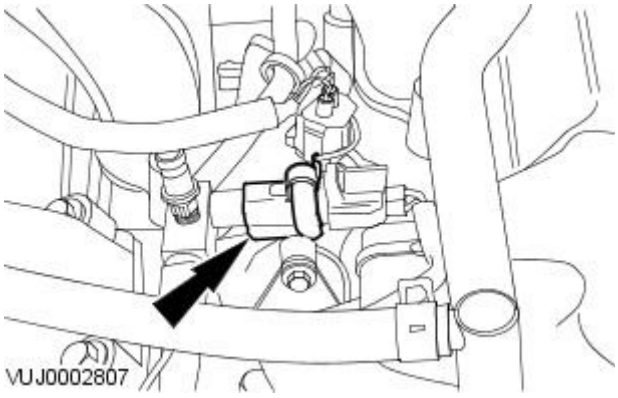

3. Install the retaining clip to the spring lock coupling.

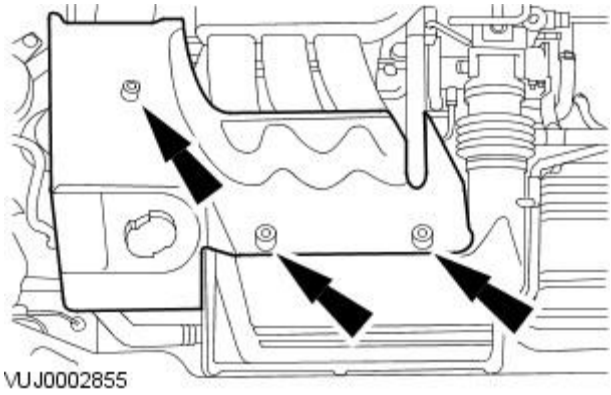

4. Install the engine cover.

Electronic Engine Controls - 2.0L NA V6 - AJV6 / 2.5L NA V6 - AJV6 / 3.0L NA V6 - AJ27 - Heated Oxygen Sensor (HO2S) LH

Removal and Installation

Removal

1. Disconnect the battery ground cable.
For additional information, refer to Section 414-01 Battery, Mounting and Cables.

2. Raise and support the vehicle.
For additional information, refer to Section 100-02 Jacking and Lifting.

3. Disconnect the heated oxygen sensor (HO2S) electrical connector.

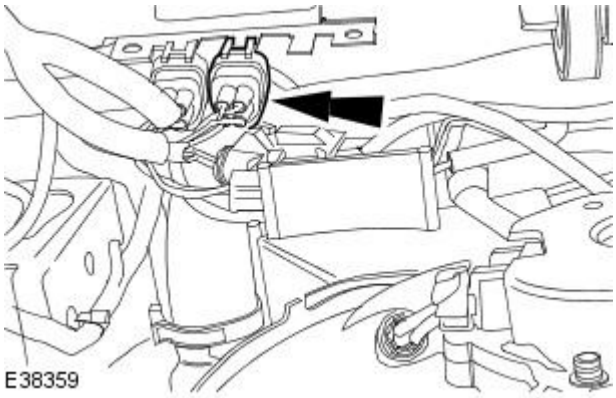

4. Detach HO2S electrical connector from the securing bracket.

1. Release the retaining tang.
2. Detach HO2S electrical connector from the securing bracket.

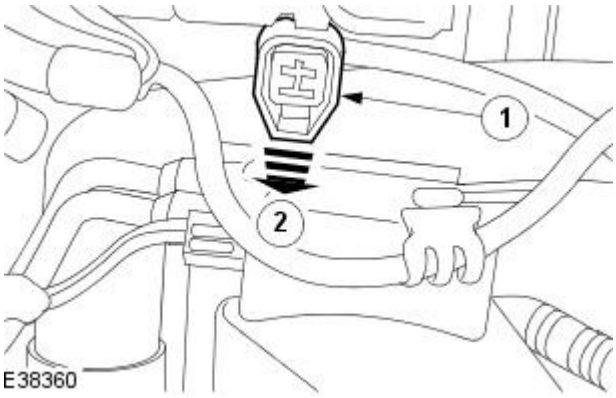

5. CAUTIONS:

Do not cut the HO2S harness.

Make sure that the HO2S casing and harness is not damaged.

Using Snap-on socket S6176 remove the HO2S.

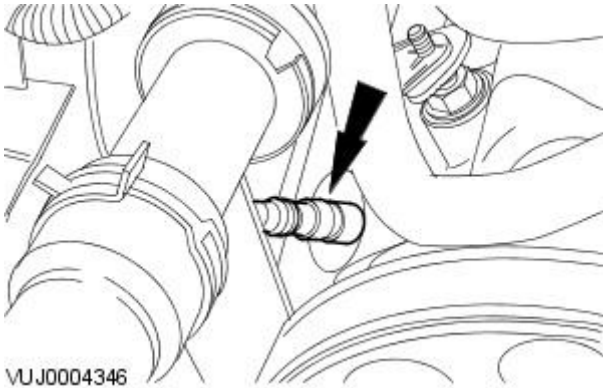

Installation

1. CAUTION: Make sure that the HO2S casing and cable are not damaged.

To install, reverse the removal procedure.

- Tighten to 40 Nm.

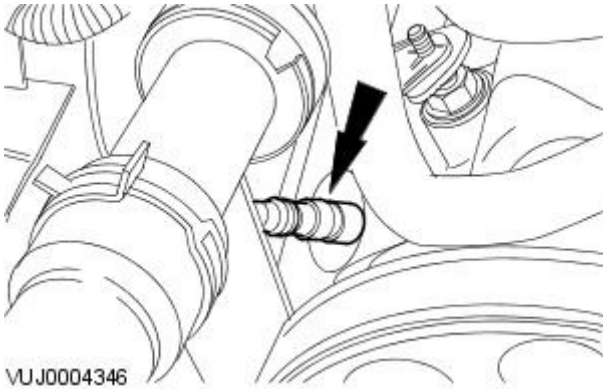

Electronic Engine Controls - 2.0L NA V6 - AJV6 / 2.5L NA V6 - AJV6 / 3.0L NA V6 - AJ27 - Heated Oxygen Sensor (HO2S) RH

Removal and Installation

Removal

1. Disconnect the battery ground cable.
   For additional information, refer to Section 414-01 Battery, Mounting and Cables.
2. Disconnect the heated oxygen sensor (HO2S) electrical connector.

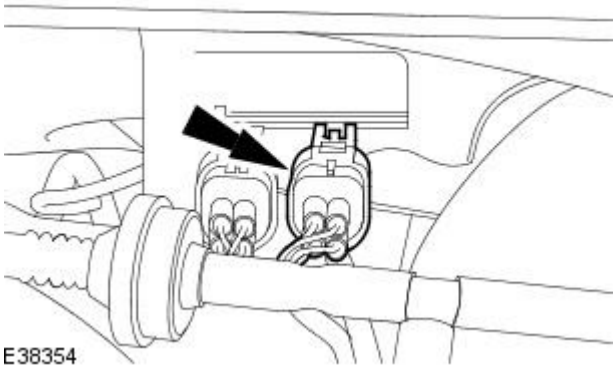

3. Detach HO2S electrical connector from the securing bracket.
   1. Release the retaining tang.
   2. Detach HO2S electrical connector from the securing bracket.

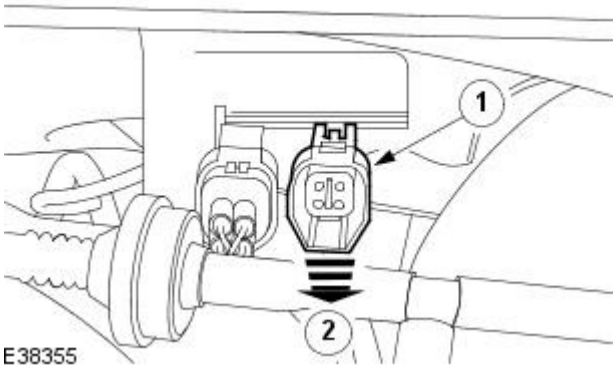

4. Turn the steering onto full right-hand lock.
5. Raise and support the vehicle.
   For additional information, refer to Section 100-02 Jacking and Lifting.
6. CAUTIONS:

   Do not cut the HO2S harness.

   Make sure that the HO2S casing and harness is not damaged.

   Using Snap-on socket S6176 remove the HO2S.

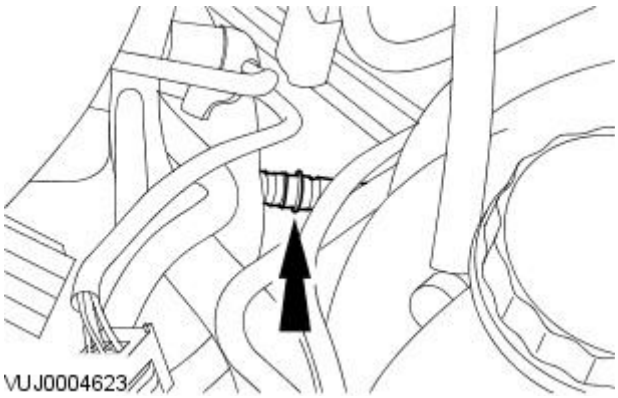

Installation

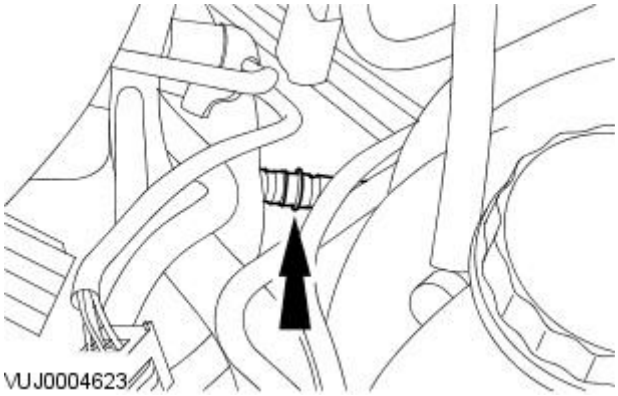

1. CAUTION: Make sure that the HO2S casing and harness is not damaged.

   To install, reverse the removal procedure.

   - Tighten to 40 Nm.

Electronic Engine Controls - 2.0L NA V6 - AJV6 / 2.5L NA V6 - AJV6 / 3.0L NA V6 - AJ27 - Knock Sensor (KS)

Removal and Installation

Removal

All vehicles

1. Disconnect the battery ground cable.
   For additional information, refer to Section 414-01 Battery, Mounting and Cables.
2. Disconnect the spring lock coupling.
   For additional information, refer to Section 310-00 Fuel System - General Information.

Vehicles with 2.5L or 3.0L engine

3. Remove the fuel charging wiring harness. For additional information, refer to Section 303-04A Fuel Charging and ControlsSection 303-04B Fuel Charging and ControlsSection 303-04C Fuel Charging and Controls - Turbocharger.

Vehicles with 2.0L engine

4. Drain the cooling system. For additional information, refer to Section 303-03A Engine Cooling / 303-03B Engine Cooling.
5. Disconnect the electrical connector.
   - Detach the harness.

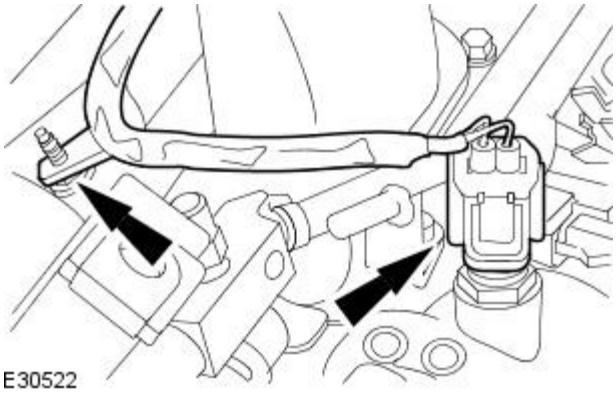

6. Remove the engine trim retaining bracket.

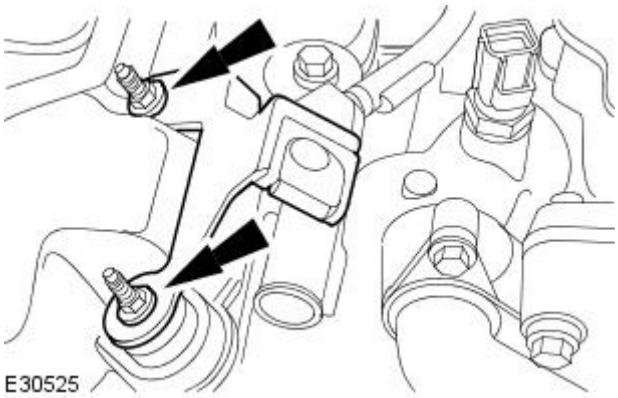

7. Detach the coolant pipe.
   - Remove and discard the seal.

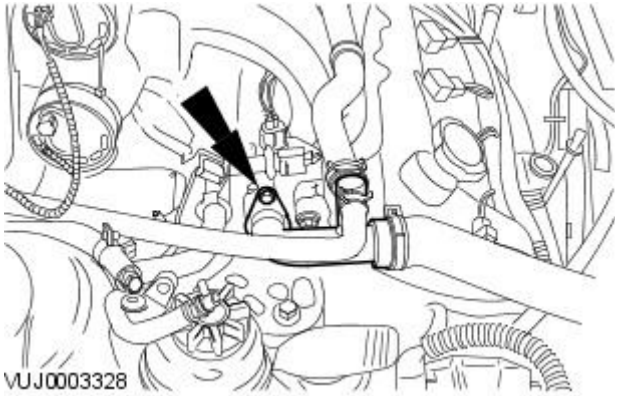

All vehicles

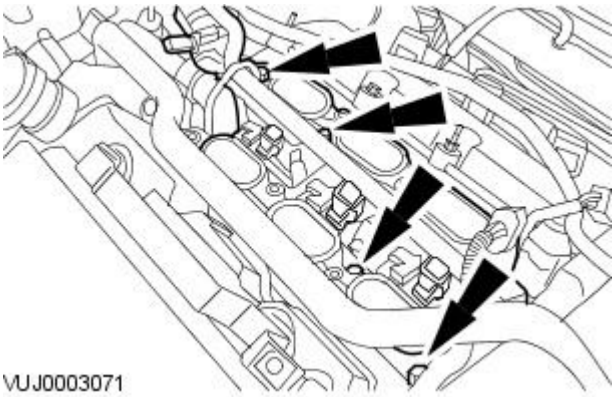

8. NOTE: Fuel may still be present in the fuel supply manifold.

Detach the fuel injection supply manifold and lower intake manifold and place to one side.

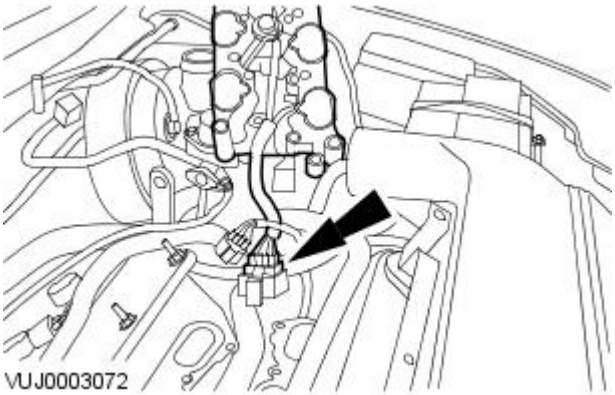

9. Remove the fuel injection supply manifold and lower intake manifold.

- Disconnect the electrical connector.
- Remove and discard the lower intake manifold O-ring seals.

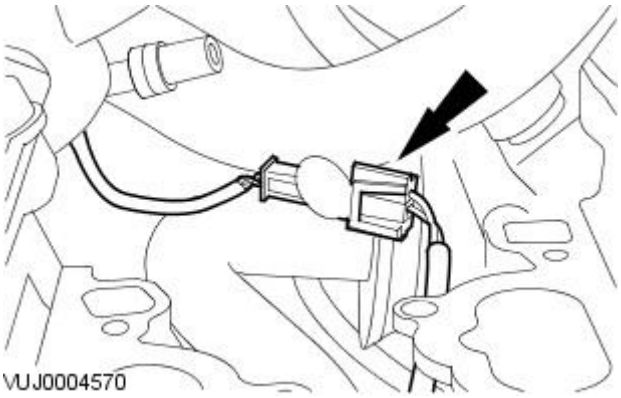

10. Detach the KS electrical connector from the retaining bracket.

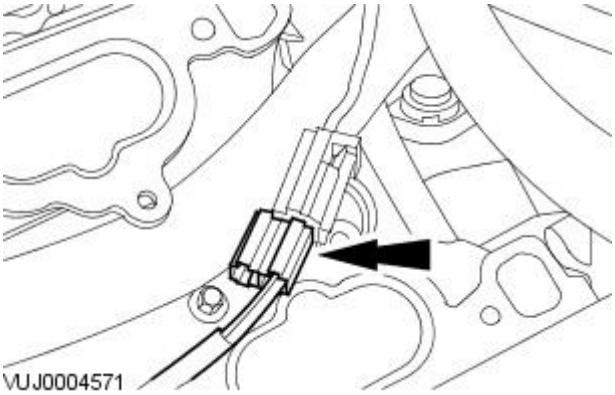

11. Disconnect the KS electrical connector.

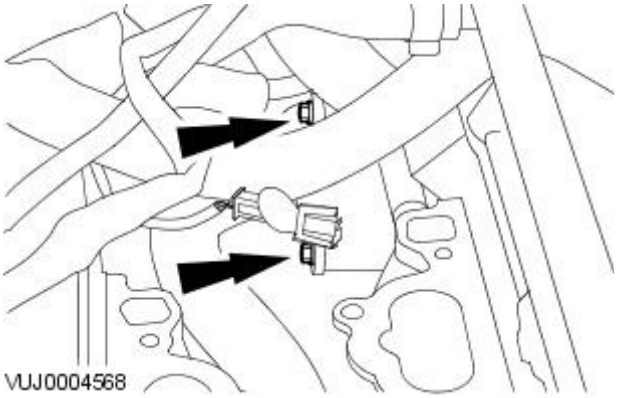

12. Remove the water pump outlet coolant pipe.

- Remove and discard the seal.

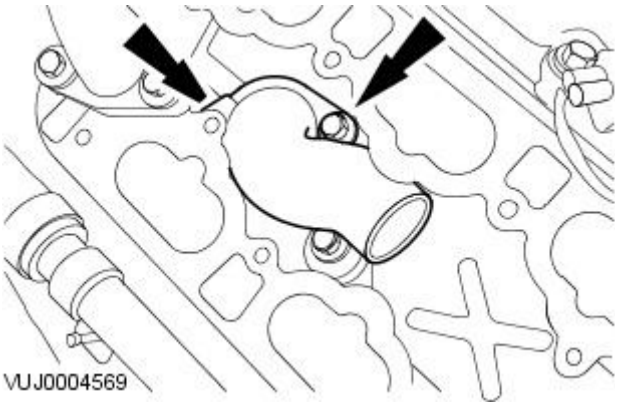

13. Remove the engine coolant inlet pipe.

- Remove and discard the seal.

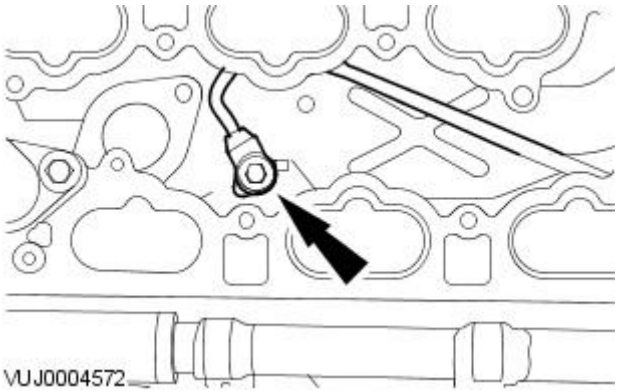

14. Remove the KS.

Installation

All vehicles

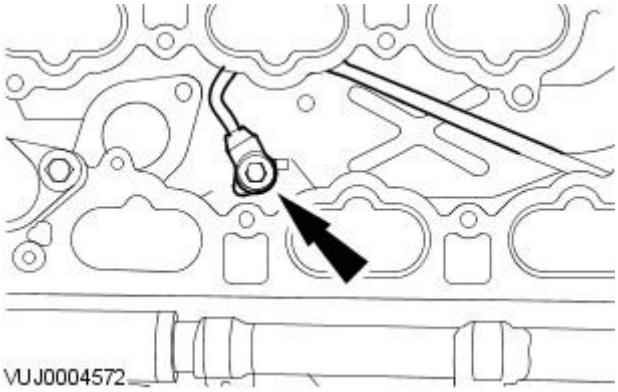

1. NOTE: Prior to installing the KS, clean the engine block and KS mating surfaces with metal surface cleaner (WSW-M5B392-A).

To install, reverse the removal procedure.

- Tighten to 19 Nm.

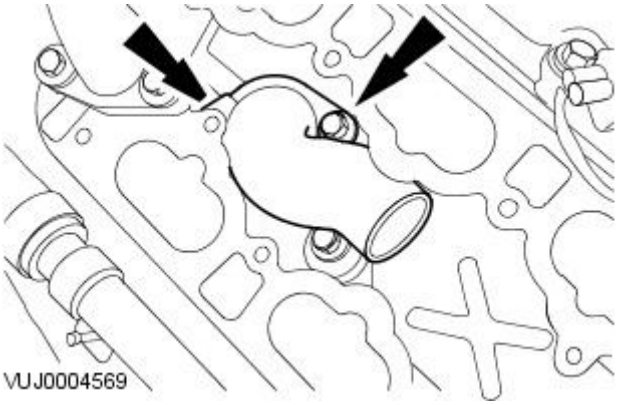

2. Install a new seal.

- Tighten to 25 Nm.

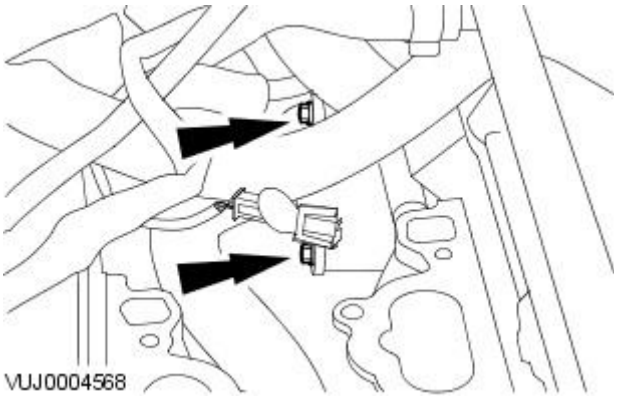

3. Install a new seal.

- Tighten to 10 Nm.

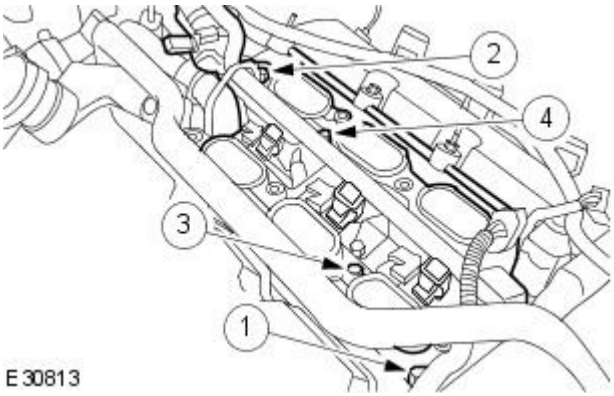

4. Tighten in the sequence shown.

- Tighten to 10 Nm.

Vehicles with 2.0L engine

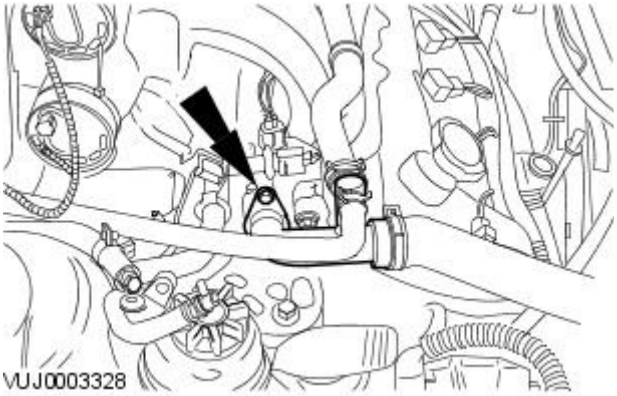

5. Install a new seal.

- Tighten to 9 Nm.

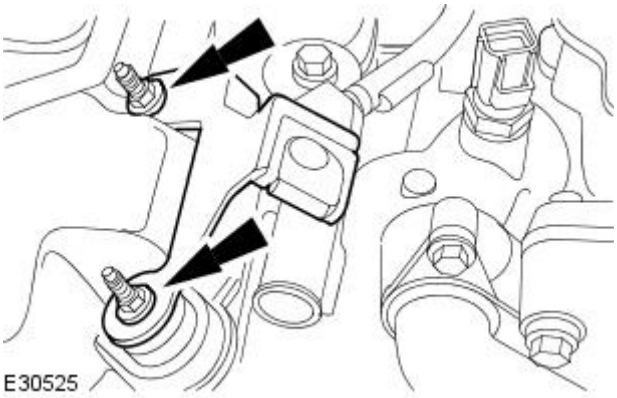

6. Tighten to 6 Nm.

Electronic Engine Controls - 2.0L NA V6 - AJV6 / 2.5L NA V6 - AJV6 / 3.0L NA V6 - AJ27 - Mass Air Flow (MAF) Sensor

Removal and Installation

Removal

1. Remove the battery cover.
2. Disconnect the MAF sensor electrical connector.

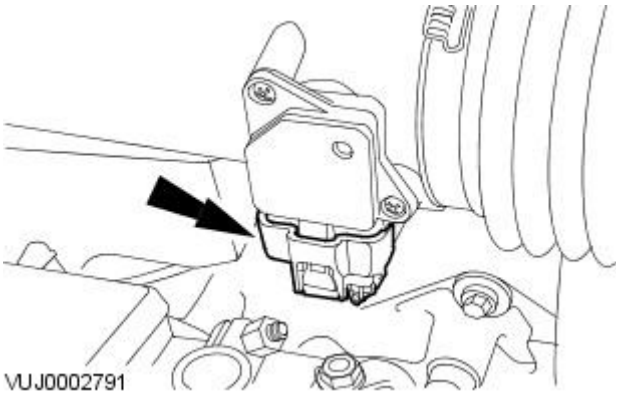

3. Remove the MAF sensor.

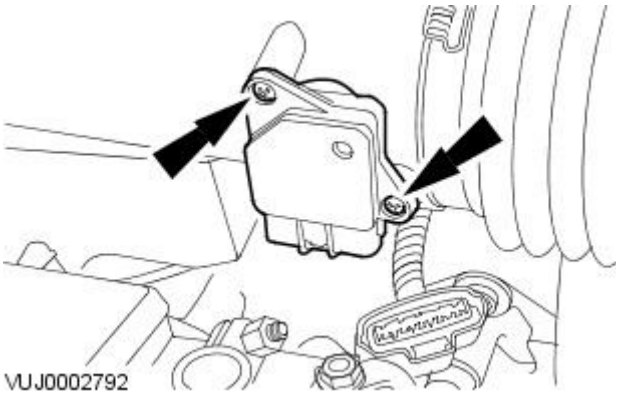

Installation

1. To install, reverse the removal procedure.
2. NOTE: For NAS vehicles only.

   If required, carry out a short drive cycle.
   For additional information, refer to: Powertrain Control Module (PCM) Short Drive Cycle Self-Test (303-14A Electronic Engine Controls - 2.0L NA V6 - AJV6/2.5L NA V6 - AJV6/3.0L NA V6 - AJ27, General Procedures).

Electronic Engine Controls - 2.0L NA V6 - AJV6 / 2.5L NA V6 - AJV6 / 3.0L NA V6 - AJ27 - Oil Temperature Sensor

Removal and Installation

Removal

1. Raise and support the vehicle.
   For additional information, refer to Section 100-02 Jacking and Lifting.
2. Remove and discard the oil filter.

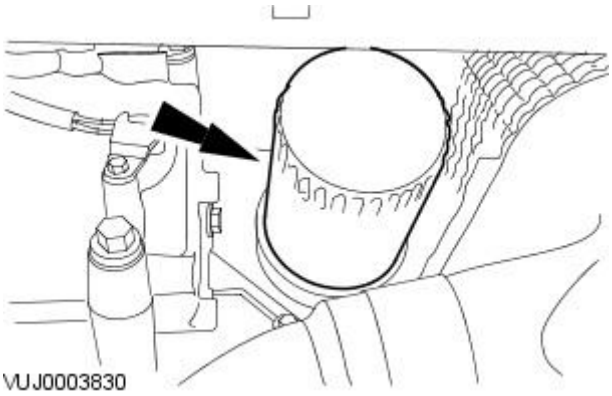

3. Disconnect the oil temperature sensor electrical connector.

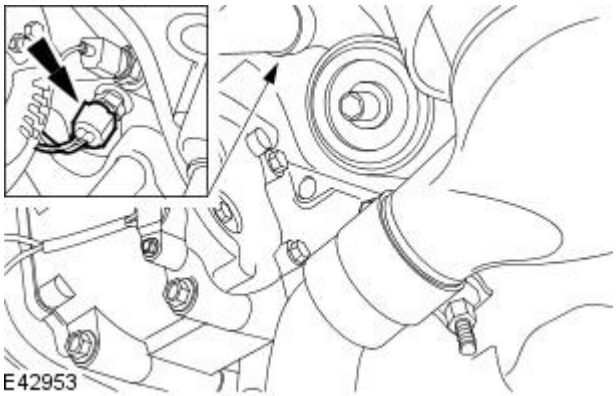

4. Remove the oil temperature sensor.

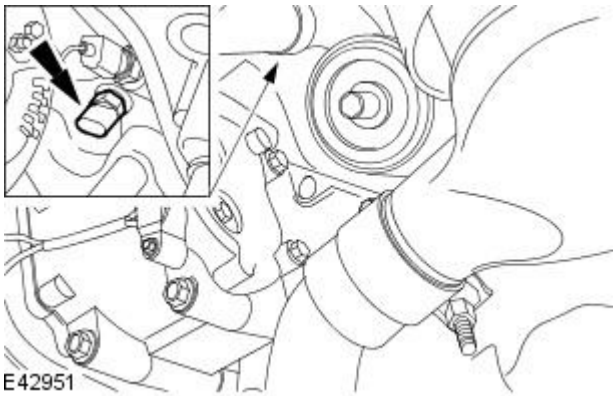

Installation

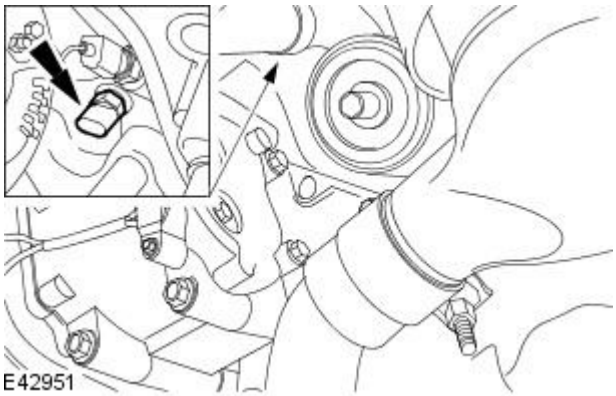

1. NOTE: Apply a small bead of sealant WSK-M4G328-A3 or equivalent sealant meeting Jaguar specification on the first three threads of the oil temperature sensor.

   To install, reverse the removal procedure.

   - Tighten to 15 Nm.

2. Install a new oil filter.
3. NOTE: Use oil WSE-M2C908-A or equivalent meeting Jaguar specification.

Check and top up the engine with oil.

Electronic Engine Controls - 2.0L NA V6 - AJV6 / 2.5L NA V6 - AJV6 / 3.0L NA V6 - AJ27 - Throttle Position (TP) Sensor

Removal and Installation

Removal

Vehicles with 2.5L or 3.0L engine

1. For additional information, refer to Section 303-04A Fuel Charging and ControlsSection 303-04B Fuel Charging and ControlsSection 303-04C Fuel Charging and Controls - Turbocharger .

Vehicles with 2.0L engine

2. Disconnect the battery
   For additional information, refer to Section 414-01 Battery, Mounting and Cables.
3. NOTE: 2.5L and 3.0L shown, 2.0L similar.

   Remove the engine cover.

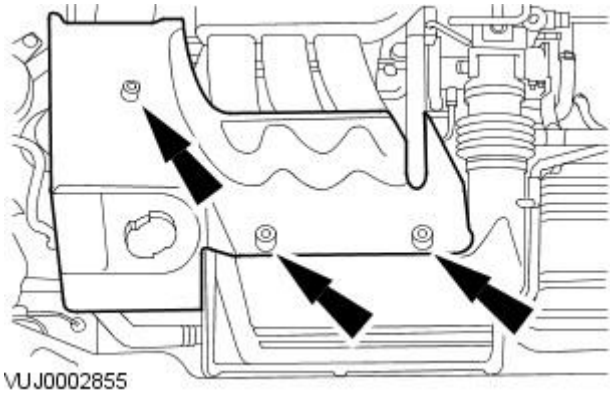

4. NOTE: 2.5L and 3.0L shown, 2.0L similar.

   Disconnect the air cleaner outlet pipe.

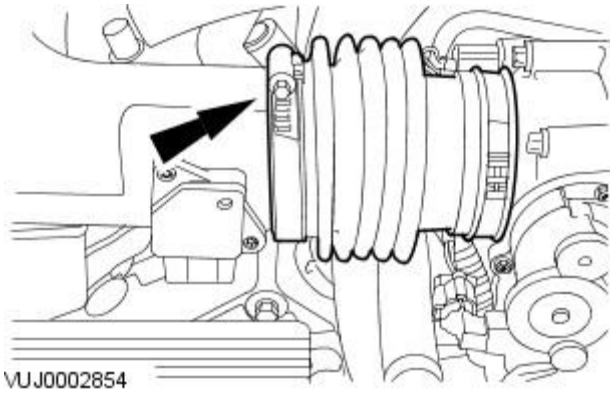

5. Disconnect the electrical connector.

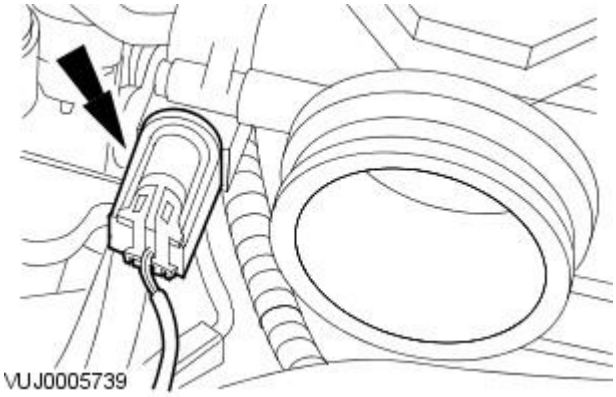

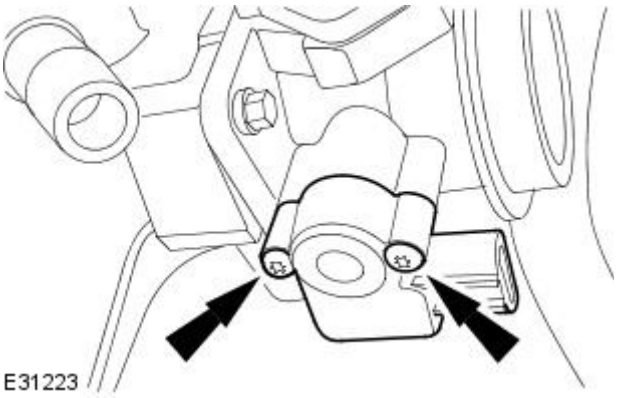

6. Remove the the throttle position (TP) sensor.

Installation

1. To install, reverse the removal procedure.

2. Tighten to 7 Nm.

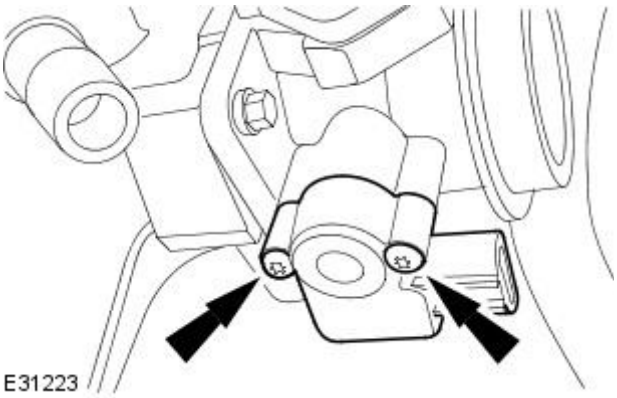

Electronic Engine Controls - 2.0L NA V6 - AJV6 / 2.5L NA V6 - AJV6 / 3.0L NA V6 - AJ27 - Variable Camshaft Timing (VCT) Oil Control Solenoid

Removal and Installation

Removal

Right-Hand Bank

1. Remove the right-hand valve cover. For additional information, refer to For additional information, refer to: Valve Cover RH (303-01A Engine - 2.0L NA V6 - AJV6/2.5L NA V6 - AJV6/3.0L NA V6 - AJ27, In-vehicle Repair).
.

Left-Hand Bank

2. Remove the left-hand valve cover. For additional information, refer to For additional information, refer to: Valve Cover RH (303-01A Engine - 2.0L NA V6 - AJV6/2.5L NA V6 - AJV6/3.0L NA V6 - AJ27, In-vehicle Repair).
.

Right-Hand and Left-Hand Banks

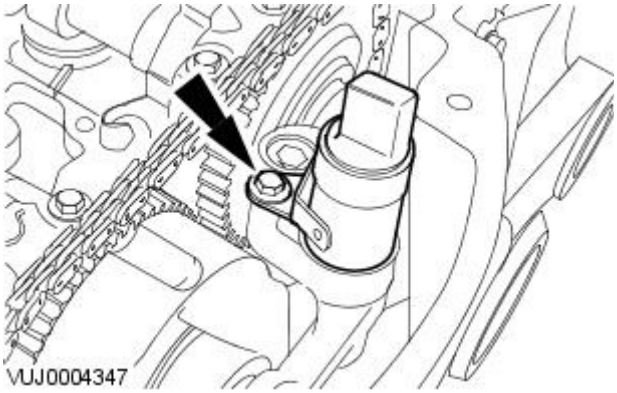

3. Remove the variable camshaft timing oil control solenoid.

Installation

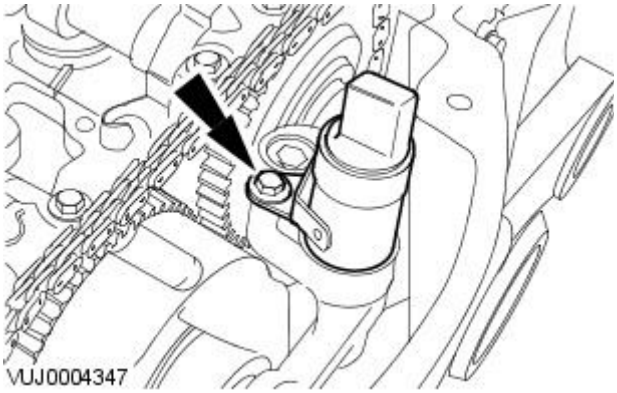

1. To install, reverse the removal procedure.
   - Tighten to 10 Nm.

2. NOTE: For NAS vehicles only.

   If required, carry out a long drive cycle.
   For additional information, refer to: Powertrain Control Module (PCM) Long Drive Cycle Self-Test (303-14A Electronic Engine Controls - 2.0L NA V6 - AJV6/2.5L NA V6 - AJV6/3.0L NA V6 - AJ27, General Procedures).

Published: 11-May-2011

Electronic Engine Controls - 2.0L Duratorq-TDCi / 2.2L Duratorq-TDCi (110kW / 150PS) - Puma -

Torque Specifications

Description	Nm	lb-ft	lb-in
Camshaft position sensor retaining bolt	9	–	80
Crankshaft position sensor retaining bolt	7	–	62
Cylinder head temperature sensor	10	–	89
Power steering pump belt cover retaining nut	10	–	89
Engine oil pressure sensor	15	11	–
Fuel temperature sensor	15	11	–
Knock sensor	20	15	–
Fuel injection supply manifold high-pressure pipe retaining nut	10	–	89
Manifold absolute pressure and temperature sensor retaining clips	4	–	35
Radiator support bar retaining bolts	25	18	–
Charge air cooler upper hose retaining clip	4	–	35
Charge air cooler lower hose retaining clip	4	–	35
Catalytic converter temperature sensor	35	26	–
Diesel particulate filter temperature sensor	35	26	–
Manifold absolute pressure sensor retaining bolt	4	–	35

Electronic Engine Controls - 2.0L Duratorq-TDCi / 2.2L Duratorq-TDCi (110kW / 150PS) - Puma - Electronic Engine Controls

Description and Operation

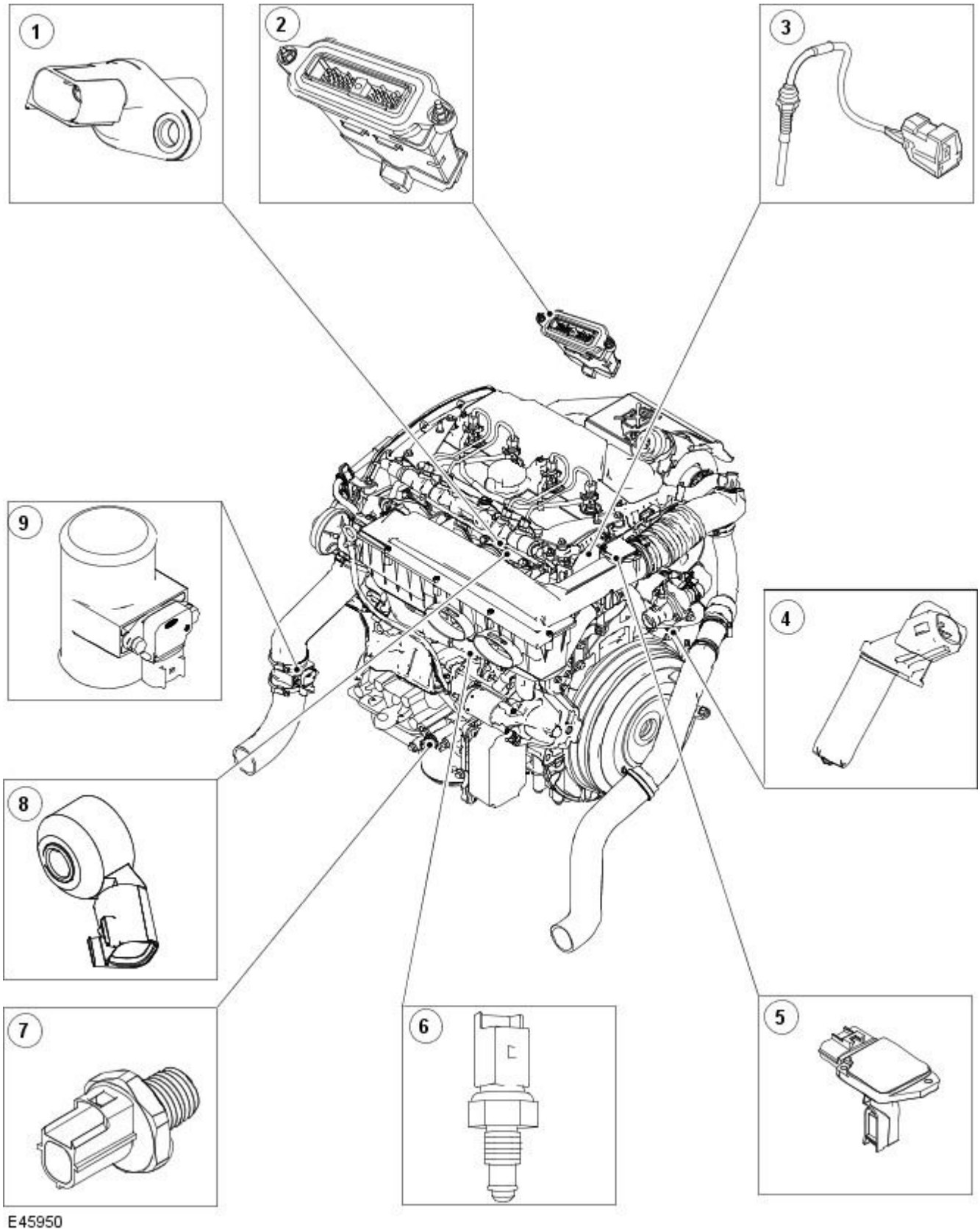

Item	Part Number	Description
1	—	Camshaft position (CMP) sensor
2	—	Engine control module (ECM)
3	—	Cylinder head temperature (CHT) sensor
4	—	Crankshaft position (CKP) sensor
5	—	Mass airflow (MAF) sensor
6	—	Fuel temperature sensor
7	—	Engine oil pressure (EOP) sensor
8	—	Knock (KS) sensor
9	—	Manifold absolute pressure and temperature (MAP-T) sensor

Camshaft Position (CMP) Sensor

The camshaft position (CMP) sensor is located on the front of the cylinder head and it is a hall effect type sensor. The CMP sensor takes its signal from the inlet camshaft lobe. The signal is used to identify cylinder number three and thus allowing the individual cylinders to be

identified. Should the CMP sensor fail the engine will not start.

Engine Control Module (ECM)

The engine control module (ECM) is located in the same position as the petrol version. The engine management system (EMS) uses signals from the various sensors as inputs to the ECM which contains a series of maps for the engine parameters. Based on the inputs from the sensors regarding current engine conditions and loads, the ECM determines the optimum settings to use for the EMS, and so gives the best performance and/or economy for a given set of conditions. The ECM also manages the speed control system, again based on information from the vehicle sensors to provide the optimum settings.

Cylinder Head Temperature (CHT) Sensor

The cylinder head temperature (CHT) sensor is located at the rear of the engine behind the rear end accessory drive camshaft pulley. The CHT sensor measures the temperature of the cylinder head and then provides the ECM and the instrument cluster with the engine temperature.

Crankshaft Position (CKP) Sensor

The crankshaft position (CKP) sensor is located at the rear of the engine mounted to the cylinder block. It is used to detect the engine position and speed of the crankshaft. It is a permanent inductive type sensor. Should the CKP sensor fail, the engine will not start.

Mass Airflow (MAF) Sensor

The mass airflow (MAF) sensor is mounted on the clean air side of the air filter and upstream of the turbocharger air compressor. The function of the MAF sensor is to measure the amount of air flow drawn into the engine. This airflow is used by the ECM to control the exhaust gas recirculation (EGR) operation.

Engine Oil Pressure (EOP) Sensor

The engine oil pressure (EOP) sensor is located on the left-hand side of the engine in the oil filter housing. The EOP is connected to the instrument cluster and is not directly part of the electronic engine control system.

Knock Sensor (KS)

The knock sensor (KS) is located on the left-hand side of the engine mounted on the cylinder head between cylinders two and three. The KS allows the ECM to analyze the quality of combustion by measuring the increase in vibration. The ECM will use this signal to calculate the quantity of fuel to be injected during phased injection. The correction to the fueling for the phased injection minimizes the combustion noise. Should the KS fail the result would be no phased injection and thus an increase in diesel knock when idling and accelerating.

Manifold Absolute Pressure and Temperature (MAP-T) Sensor

The manifold absolute pressure and temperature (MAP-T) sensor combines the manifold pressure sensor and inlet air temperature sensor in one component. It is located in the inlet boost pressure pipe, right side front after the charge air cooler. Its function and operation is to measure the positive charge pressure developed by the turbocharger and its temperature, and to inform the ECM.

Fuel Temperature Sensor

The fuel temperature sensor can be identified by a blue connector located in the low pressure fuel supply circuit on the back of the high pressure pump. The fuel temperature sensor is a negative thermal coefficient type sensor which measures the fuel temperature in the low pressure circuit. Should the fuel temperature sensor fail the cold running characteristic will be affected.

Published: 12-Jul-2011

Electronic Engine Controls - 2.0L Duratorq-TDCi/2.2L Duratorq-TDCi (110kW/150PS) - Puma - Electronic Engine Controls

Diagnosis and Testing

Overview

This section covers the components of the engine management system.

The changes to the engine management for this model year include the addition of a diesel particulate filter system, and this section includes information on the diagnosis and testing of this system and links to sections dealing specifically with particulate filter checks.

For additional information on the description and operation of the engine management system:
REFER to: Electronic Engine Controls (303-14B Electronic Engine Controls - 2.0L Duratorq-TDCi/2.2L Duratorq-TDCi (110kW/150PS) - Puma, Description and Operation).

For additional information on the description and operation of the diesel particulate filter system:
REFER to: Exhaust System (309-00 Exhaust System, Description and Operation).

Inspection and Verification

1. **1.** Verify the customer concern.
2. **2.** Visually inspect for obvious mechanical or electrical faults.

Visual inspection

Mechanical	Electrical
• Engine oil level • Cooling system coolant level • Fuel level/contamination • Fuel leaks • Fuel pumps • Intake air system • Accessory drive belt • Sensor fitment/condition • Diesel particulate filter (DPF)	• Fuses • Wiring harness • Electrical connector(s) • Injectors • Glow plugs • 5 volt sensor supply • Sensor(s) • Engine control module (ECM)

3. **3.** If an obvious cause for an observed or reported concern is found, correct the cause (if possible) before proceeding to the next step.
4. **4.** Use the approved diagnostic system or a scan tool to retrieve any diagnostic trouble codes (DTCs) before moving onto the symptom chart or DTC index.
   - Make sure that all DTCs are cleared following rectification.

Symptom Chart

Symptom (general)	Symptom (specific)	Possible source	Action
Non-Start	Engine does not crank	• Security system /Immobilizer engaged • Battery condition/charge • Starter relay fault • Starting system fault • Engine control module (ECM) relay fault • **Park/Neutral** switch fault • Engine seized	Make sure that the immobilizer system is disarmed. Check the battery condition and state of charge. Check that the engine turns by hand. Check the starting system and circuits. Refer to the electrical guides. Check for DTCs indicating an ECM relay or park/neutral switch fault. Rectify as necessary.
	Engine cranks, but does not start	• Security system /Immobilizer engaged • Low/Contaminated fuel • Air ingress • Blocked air cleaner • Blocked fuel filter • Low-pressure circuit fault • Fuel metering valve blocked/contaminated • Injector(s) fault/programming • Intake air temperature (IAT) sensor fault • Glow plug(s)/circuit fault • Fuel pressure sensor fault • Camshaft position (CMP) sensor fault • Crankshaft position (CKP) sensor fault • Cylinder head temperature (CHT) sensor fault • Fuel pump fault • Low compression • Valve train fault • Blocked catalyst	Make sure that the immobilizer system is disarmed. Check the fuel level and condition. Draw off approximately 1 ltr (2.11 pints) of fuel and allow to stand for 1 minute. Check to make sure there is no separation of the fuel indicating water or other liquid in the fuel. Check the low-pressure fuel system for leaks/damage, check for air ingress. Check the air cleaner element. Check that fuel flows through the fuel filter. Check for DTCs indicating a fuel metering valve or injector fault. Check for DTCs indicating an engine management sensor fault. Check the valve train, check the compressions, REFER to: Engine (303-00 Engine System - General Information, Diagnosis and Testing). Check the catalytic converter condition, etc. Check for diesel particulate filter (DPF)DTCs. Refer to the warranty policy and procedures manual if an ECM is suspect.

Symptom (general)	Symptom (specific)	Possible source	Action
		• Engine control module (ECM) fault	
Difficult to start	Difficult to start cold	• Glow plug(s)/circuit fault • Contaminated fuel • Air ingress • Blocked air cleaner • Blocked fuel filter • Low-pressure circuit fault • Fuel metering valve blocked/contaminated • Fuel pressure sensor fault • Intake air temperature (IAT) sensor fault • Cylinder head temperature (CHT) sensor fault • Camshaft position (CMP) sensor fault • Crankshaft position (CKP) sensor fault • Injector(s) fault/programming • Pump fault • Blocked catalyst • Valve train fault • Low compression	Check the glow plugs and circuits. Refer to the electrical guides. Check the fuel level and condition. Draw off approximately 1 ltr (2.11 pints) of fuel and allow to stand for 1 minute. Check to make sure there is no separation of the fuel indicating water or other liquid in the fuel. Check the low-pressure fuel system for leaks/damage, check for air ingress. Check the air cleaner element. Check that fuel flows through the fuel filter. Check for DTCs indicating a fuel metering valve or injector fault. Check for DTCs indicating an engine management sensor fault. Check the valve train, check the compressions, REFER to: Engine (303-00 Engine System - General Information, Diagnosis and Testing). Check the catalytic converter condition, etc. Check for diesel particulate filter DTCs.
	Difficult to start hot	• Contaminated fuel • Air ingress • Blocked air cleaner • Blocked fuel filter • Low-pressure circuit fault • Fuel metering valve blocked/contaminated • Exhaust gas recirculation (EGR) valve fault • Fuel pressure sensor fault • Intake air temperature (IAT) sensor fault • Camshaft position (CMP) sensor fault • Crankshaft position (CKP) sensor fault • Injector(s) fault/programming • Pump fault • Blocked catalyst • Valve train fault • Low compression	Check the fuel level and condition. Draw off approximately 1 ltr (2.11 pints) of fuel and allow to stand for 1 minute. Check to make sure there is no separation of the fuel indicating water or other liquid in the fuel. Check the low-pressure fuel system for leaks/damage, check for air ingress. Check the air cleaner element. Check that fuel flows through the fuel filter. Check for DTCs indicating a fuel metering valve or injector fault. Check for DTCs indicating an engine management sensor fault. Check the valve train, check the compressions, REFER to: Engine (303-00 Engine System - General Information, Diagnosis and Testing). Check the catalytic converter condition, etc. Check for diesel particulate filter DTCs.
	Engine cranks too fast/slow	• Battery condition/charge • Starting system fault • Low compression	Check the battery condition and state of charge. Check the starting system circuits. Refer to the electrical guides. Rectify as necessary. Check the compressions, REFER to: Engine (303-00 Engine System - General Information, Diagnosis and Testing).
Driveability	Rough idle	• Low/Contaminated fuel • Air ingress • Injector(s) fault/programming • Fuel metering valve blocked/contaminated • Exhaust gas recirculation (EGR) valve fault • Blocked air cleaner • Blocked fuel filter • Pump fault • Crankshaft position (CKP) sensor fault • Intake air temperature (IAT) sensor fault • Manifold absolute pressure (MAP) sensor fault • Knock sensor fault • Dual-mass flywheel fault	Check the fuel level and condition. Draw off approximately 1 ltr (2.11 pints) of fuel and allow to stand for 1 minute. Check to make sure there is no separation of the fuel indicating water or other liquid in the fuel. Check the low-pressure fuel system for leaks/damage, check for air ingress. Check for DTCs indicating an injector programming or EGR fault. Check the air cleaner element. Check that fuel flows through the fuel filter. Check for DTCs indicating a fuel metering valve fault. Check for DTCs indicating an engine management sensor fault. Check the dual-mass flywheel.
	Idle speed high or low	• Accelerator pedal position (APP) sensor fault • Intake air temperature (IAT) sensor fault	Check for DTCs indicating an APP or IAT sensor fault. Rectify as necessary.

Symptom (general)	Symptom (specific)	Possible source	Action
	Engine speed out of control	• Engine oil level too high • Excessive blow-by • Accelerator pedal position (APP) sensor fault • Turbocharger bearing/seal failure	Check/correct the engine oil level. Check the engine condition. Check for DTCs indicating an APP sensor fault. Rectify as necessary. Check the turbocharger bearing/seal condition by assessing the movement in the turbocharger shaft and the amount of oil in the turbocharger body. Note that a small amount of oil is normal.
	Lack of power when accelerating	• Contaminated fuel • Air intake circuit fault • Low fuel pressure • Exhaust gas recirculation (EGR) valve fault • Fuel filter blocked • Fuel lines kinked/restricted • Pump fault • Injector(s) fault/programming • Vehicle speed sensor fault • Cylinder head temperature (CHT) sensor fault • Intake air temperature (IAT) sensor fault • Manifold absolute pressure (MAP) sensor fault • Accelerator pedal position (APP) sensor fault • Fuel rail temperature (FRT) sensor fault • Fuel rail pressure (FRP) sensor fault • Fuel metering valve fault • Turbocharger fault • Catalyst blocked • Valve timing fault • Low compression	Check the fuel level and condition. Draw off approximately 1 ltr (2.11 pints) of fuel and allow to stand for 1 minute. Check to make sure there is no separation of the fuel indicating water or other liquid in the fuel. Check the air intake system and low-pressure fuel circuit. Rectify as necessary. Check for DTCs indicating an EGR fault. Check for DTCs indicating an engine management sensor or injector programming fault. Check the turbocharger condition and operation. Check the catalytic converter condition. Rectify as necessary. For valve timing and compression information, REFER to: Engine (303-00 Engine System - General Information, Diagnosis and Testing).
	Engine stops/stalls	• Low/Contaminated fuel • Air cleaner element blocked • Fuel metering valve blocked/contaminated • Pump fault • High-pressure leak • Low-pressure circuit fault (air ingress) • Relay fault • Crankshaft position (CKP) sensor fault • Camshaft position (CMP) sensor fault • Cylinder head temperature (CHT) sensor fault • Fuel rail pressure (FRP) sensor fault • Dual-mass flywheel fault • Engine control module (ECM) fault	Check the fuel level and condition. Draw off approximately 1 ltr (2.11 pints) of fuel and allow to stand for 1 minute. Check to make sure there is no separation of the fuel indicating water or other liquid in the fuel. Check the air intake system and low-pressure fuel circuit. Rectify as necessary. Check for DTCs indicating a relay, engine management sensor or ECM fault. Check the dual-mass flywheel. Refer to the warranty policy and procedures manual if an ECM is suspect.
	Engine judders	• Low/Contaminated fuel • Fuel metering valve blocked/contaminated • High-pressure leak • Air intake circuit fault • Low-pressure circuit fault (air ingress) • Pump fault • Exhaust gas recirculation (EGR) valve fault • Accelerator pedal position (APP) sensor fault • Cylinder head temperature (CHT) sensor fault • Camshaft position (CMP) sensor fault • Crankshaft position (CKP) sensor fault • Intake air temperature (IAT) sensor fault	Check the fuel level and condition. Draw off approximately 1 ltr (2.11 pints) of fuel and allow to stand for 1 minute. Check to make sure there is no separation of the fuel indicating water or other liquid in the fuel. Check the air intake system and low-pressure fuel circuit. Rectify as necessary. Check for DTCs indicating an engine management sensor or injector programming fault. Check the catalytic converter and turbocharger condition. Rectify as necessary. Check the dual-mass flywheel. For cylinder head, compression and camshaft information, REFER to: Engine (303-00 Engine System - General Information, Diagnosis and Testing).

Symptom (general)	Symptom (specific)	Possible source	Action
		• Manifold absolute pressure (MAP) sensor fault • Knock sensor fault • Fuel rail pressure (FRP) sensor fault • Injector(s) fault/programming • Catalyst blocked • Turbocharger fault • Dual-mass flywheel fault • Cylinder head gasket fault • Camshafts/Valve clearances • Low compression	
	Engine will not stop	• Engine oil level too high • Turbocharger fault • Engine control module (ECM) fault	Check/correct the engine oil level. Check the turbocharger condition and operation. Check for DTCs indicating an ECM fault. Refer to the warranty policy and procedures manual if an ECM is suspect.
General	Excessive fuel consumption	• Incorrect engine oil • Air intake circuit fault • Low-pressure circuit fault (air ingress/leaks) • Fuel metering valve/circuit • High-pressure leak • Exhaust gas recirculation (EGR) valve fault • Injector(s) fault/programming • Cylinder head temperature (CHT) sensor fault • Intake air temperature (IAT) sensor fault • Manifold absolute pressure (MAP) sensor fault • Turbocharger fault • Dual-mass flywheel fault • Valve timing fault • Low compression	Make sure that the correct grade of oil is used in the engine. Check the air intake and low-pressure circuits. Check for DTCs indicating an EGR, injector programming or engine management sensor fault. Check the turbocharger condition and operation. Check the dual-mass flywheel. For valve timing and compression information, REFER to: Engine (303-00 Engine System - General Information, Diagnosis and Testing).
	Excessive black smoke	• Air intake circuit fault • Exhaust gas recirculation (EGR) valve fault • Injector(s) fault/programming • Accelerator pedal position (APP) sensor fault • Crankshaft position (CKP) sensor fault • Knock sensor fault • Fuel rail pressure (FRP) sensor fault • Turbocharger bearings/seals fault • Valve timing fault	Check the air intake circuit. Check for DTCs indicating an EGR, injector programming or engine management sensor fault. Check the turbocharger bearing/seal condition by assessing the movement in the turbocharger shaft and the amount of oil in the turbocharger body. Note that a small amount of oil is normal. For valve timing information, REFER to: Engine (303-00 Engine System - General Information, Diagnosis and Testing).

DTC index

DTC	Condition	Possible source	Action
B1864	Battery power supply	• Engine control module (ECM) power supply circuit fault	Check the ECM power and ground circuits. Refer to the electrical guides. Rectify as necessary. Clear the DTCs and check for normal operation.
B2139	Engine control module (ECM) ID does not match	• Data mismatch between ECM and passive anti-theft system (PATS)	Check the configuration of the ECM and anti-theft system. Reconfigure as necessary using the approved diagnostic system.
C1137	Anti-lock brake system (ABS) control module fault	• ABS control module internal fault, random access memory, read only memory	Refer to the warranty policy and procedures manual if a module is suspect.
C1145	Right-hand front wheel speed sensor input circuit fault	• Wheel speed sensor input circuit: high resistance • Wheel speed sensor input circuit: short circuit to ground	Check the wheel speed sensor and circuits. Refer to the electrical guides. If no fault is found in the circuits, install a new sensor.

DTC	Condition	Possible source	Action
		• Wheel speed sensor input circuit: short circuit to power	
C1155	Left-hand front wheel speed sensor input circuit fault	• Wheel speed sensor input circuit: high resistance • Wheel speed sensor input circuit: short circuit to ground • Wheel speed sensor input circuit: short circuit to power	
C1165	Right-hand rear wheel speed sensor input circuit fault	• Wheel speed sensor input circuit: high resistance • Wheel speed sensor input circuit: short circuit to ground • Wheel speed sensor input circuit: short circuit to power	
C1175	Left-hand rear wheel speed sensor input circuit fault	• Wheel speed sensor input circuit: high resistance • Wheel speed sensor input circuit: short circuit to ground • Wheel speed sensor input circuit: short circuit to power	
P0070	Ambient air temperature (AAT) sensor circuit malfunction	• AAT sensor circuit: high resistance • AAT sensor circuit: short circuit to ground • AAT sensor circuit: short circuit to power • AAT sensor fault	Refer to the approved diagnostic system for a guided diagnostic routine. Check the ambient air temperature sensor and circuits. Refer to the electrical guides. If no fault is found in the circuits, install a new sensor. Clear the DTCs, test for normal operation.
P0100	Mass air flow (MAF) sensor circuit malfunction	• MAF sensor circuit: high resistance • MAF sensor circuit: short circuit to ground • MAF sensor circuit: short circuit to signal return • MAF sensor fault	Refer to the approved diagnostic system for a guided diagnostic routine. Check the MAF sensor and circuits. Refer to the electrical guides. If no fault is found in the circuits, install a new sensor. REFER to: Mass Air Flow (MAF) Sensor (303-14B Electronic Engine Controls - 2.0L Duratorq-TDCi/2.2L Duratorq-TDCi (110kW/150PS) - Puma, Removal and Installation). Clear the DTCs, test for normal operation.
P0105	Manifold absolute pressure temperature (MAPT) sensor circuit malfunction	• MAPT sensor circuit: high resistance • MAPT sensor circuit: short circuit to ground • MAPT sensor circuit: short circuit to power • MAPT sensor fault	Refer to the approved diagnostic system for a guided diagnostic routine. This DTC can be set as a result of other codes. If P1665 is also set, investigate this first. Check the MAPT sensor and circuits. Refer to the electrical guides. If no fault is found in the circuits, install a new sensor. Clear the DTCs, test for normal operation.
P0110	Intake air temperature (IAT) sensor circuit malfunction (the intake air temperature sensor is part of the manifold absolute pressure and temperature (MAPT) sensor)	• IAT sensor circuit: high resistance • IAT sensor circuit: short circuit to ground • IAT sensor circuit: short circuit to signal return • MAPT sensor fault	Refer to the approved diagnostic system for a guided diagnostic routine. Check the MAPT sensor and circuits. Refer to the electrical guides. If no fault is found in the circuits, install a new sensor. REFER to: Manifold Absolute Pressure and Temperature (MAPT) Sensor (303-14B Electronic Engine Controls - 2.0L Duratorq-TDCi/2.2L Duratorq-TDCi (110kW/150PS) - Puma, Removal and Installation). Clear the DTCs, test for normal operation.
P0121	Accelerator pedal position (APP) sensor circuit A range/performance	• APP sensor circuit A: high resistance • APP sensor circuit A: short circuit to ground • APP sensor circuit A: short circuit to signal return • APP sensor fault	Check the APP sensor and circuits. Refer to the electrical guides. If no fault is found in the circuits, install a new sensor. REFER to: Accelerator Pedal (310-02 Acceleration Control, Removal and Installation). Clear the DTCs, test for normal operation.
P0180	Fuel temperature sensor A range malfunction	• Fuel temperature sensor circuit: high resistance • Fuel temperature sensor: faulty connection • Fuel temperature sensor fault	Check the fuel temperature sensor and circuits. Refer to the electrical guides. If no fault is found in the circuits, install a new sensor. REFER to: Fuel Temperature Sensor (303-14B Electronic Engine Controls - 2.0L Duratorq-TDCi/2.2L Duratorq-TDCi (110kW/150PS) - Puma, Removal and Installation). Clear the DTCs, test for normal operation.
P0190	Fuel pressure sensor A circuit	• Fuel pressure sensor circuit: high resistance • Fuel pressure sensor: faulty connection • Fuel pressure sensor fault	Refer to the approved diagnostic system for a guided diagnostic routine. Check the fuel pressure sensor and circuits. Refer to the electrical guides. If no fault is found in the circuits, install a new fuel injection supply manifold (the pressure sensor cannot be serviced separately). REFER to: Fuel Injection Supply Manifold (303-04B Fuel Charging and Controls - 2.0L Duratorq-TDCi/2.2L Duratorq-TDCi (110kW/150PS) - Puma, Removal and Installation). Clear the DTCs, test for normal operation.

DTC	Condition	Possible source	Action
P0191	Fuel pressure sensor A circuit range/performance	• Pump deterioration - Contaminated fuel • Leaking fuel rail • Fuel pressure sensor circuit fault • Fuel pressure sensor fault	Check for contaminated fuel. Draw off approximately 1 litre (2.11 pints) of fuel into a clear container and allow to settle for 1 minute. Examine the fuel for separation indicating contamination. Check the fuel rail for leaks, etc. Check the fuel pressure sensor and circuits. Refer to the electrical guides. If no fault is found in the circuits, install a new fuel injection supply manifold (the pressure sensor cannot be serviced separately). REFER to: Fuel Injection Supply Manifold (303-04B Fuel Charging and Controls - 2.0L Duratorq-TDCi/2.2L Duratorq-TDCi (110kW/150PS) - Puma, Removal and Installation). Clear the DTCs, test for normal operation.
P0200	Injector circuit fault	• Blocked, kinked or crushed fuel return lines • Injector supply circuit: short circuit to ground • Injector supply circuit: short circuit to power • Injector resistance correction invalid • Engine control module (ECM) fault	Check the fuel return lines for damage, etc. Check the injector circuits. Refer to the electrical guides. Rectify as necessary. Clear the DTCs, test for normal operation. Refer to the warranty policy and procedures manual if an ECM is suspect.
P0201	Injector circuit open, cylinder 1	• Injector 1 circuit: short circuit to ground • Injector 1 circuit: short circuit to power • Injector 1 circuit: high resistance • Injector failure	Check the injector circuits. Refer to the electrical guides. Rectify as necessary. If no fault is found in the circuits, install a new injector. REFER to: Fuel Injector (303-04B Fuel Charging and Controls - 2.0L Duratorq-TDCi/2.2L Duratorq-TDCi (110kW/150PS) - Puma, Removal and Installation). Clear the DTCs, test for normal operation.
P0202	Injector 4 (cylinder 2) circuit malfunction	• Injector 4 circuit: short circuit to ground • Injector 4 circuit: short circuit to power • Injector 4 circuit: high resistance • Injector failure	
P0203	Injector 2 (cylinder 3) circuit malfunction	• Injector 2 circuit: short circuit to ground • Injector 2 circuit: short circuit to power • Injector 2 circuit: high resistance • Injector failure	
P0204	Injector 3 (cylinder 4) circuit malfunction	• Injector 3 circuit: short circuit to ground • Injector 3 circuit: short circuit to power • Injector 3 circuit: high resistance • Injector failure	
P0221	Accelerator pedal position (APP) sensor circuit B range/performance	• APP sensor circuit B: high resistance • APP sensor circuit B: short circuit to ground • APP sensor circuit B: short circuit to signal return • APP sensor fault	Check the APP sensor and circuits. Refer to the electrical guides. If no fault is found in the circuits, install a new sensor. REFER to: Accelerator Pedal (310-02 Acceleration Control, Removal and Installation). Clear the DTCs, test for normal operation.
P0226	Accelerator pedal position (APP) sensor circuit C range/performance	• APP sensor circuit C: high resistance • APP sensor circuit C: short circuit to ground • APP sensor circuit C: short circuit to signal return • APP sensor fault	Refer to the approved diagnostic system for a guided diagnostic routine. Check the APP sensor and circuits. Refer to the electrical guides. If no fault is found in the circuits, install a new sensor. REFER to: Accelerator Pedal (310-02 Acceleration Control, Removal and Installation). Clear the DTCs, test for normal operation.
P0234	Turbocharger over boost condition	• Excessive boost, detected by manifold absolute pressure and temperature (MAPT) sensor	Check the turbocharger operation, check for sticking turbocharger vanes, etc. Clear the DTCs, test for normal operation.
P0235	Turbocharger boost sensor A circuit	• Manifold absolute pressure and temperature (MAPT) sensor vacuum hose fault • MAPT sensor circuit: open circuit • MAPT sensor circuit: high resistance • MAPT sensor circuit: short circuit to ground • MAPT sensor circuit: short circuit to power • MAPT sensor circuit: short circuit to another	Using the manufacturer approved diagnostic system perform the **(Turbo, exhaust gas recirculation and air path dynamic test)** routine. Refer to the electrical circuit diagrams and check manifold absolute pressure and temperature sensor circuit - DL1-108 - for short circuit to ground, short circuit to power, open circuit, high resistance, short circuit to another circuit. For further diagnostic information REFER to: Turbocharger (303-04C Fuel Charging and Controls - Turbocharger, Diagnosis and Testing).

DTC	Condition	Possible source	Action
		circuit (signal return) • MAPT sensor fault	
P0243	Turbocharger actuator A circuit	• Turbocharger actuator circuit: high resistance • Turbocharger actuator fault	Refer to the approved diagnostic system for a guided diagnostic routine. Check the turbocharger actuator and circuits. Refer to the electrical guides. If no fault is found in the circuits, install a new turbocharger. REFER to: Turbocharger (303-04C Fuel Charging and Controls - Turbocharger, Removal and Installation). Clear the DTCs, test for normal operation.
P0251	Injection pump fuel metering control valve	• Contaminated fuel • Air ingress • Pump fault • Excessive injector leakage • Swarf in system • Inlet metering valve fault	Check for contaminated fuel. Draw off approximately 1 litre (2.11 pints) of fuel into a clear container and allow to settle for 1 minute. Examine the fuel for separation indicating contamination. Check the low-pressure fuel system for air ingress, check the fuel pump for evidence of swarf, etc. Check for injector leakage and DTCs indicating an inlet metering valve fault.
P0263	Injector 1 (cylinder 1) contribution/balance	• Injector fault	Carry out the injector leakage procedure. Rectify as necessary. Clear the DTCs, test for normal operation.
P0266	Injector 4 (cylinder 2) contribution/balance	• Injector fault	
P0269	Injector 2 (cylinder 3) contribution/balance	• Injector fault	
P0272	Injector 3 (cylinder 4) contribution/balance	• Injector fault	
P0325	Knock sensor (KS) signal invalid	• KS circuit fault	Check the KS and circuits. Refer to the electrical guides. Rectify as necessary. Clear the DTCs, test for normal operation.
P0335	Crankshaft position (CKP) sensor	• Teeth missing from the crank input, indicating poor output from the crankshaft reference sensor • Extra crank teeth seen, indicating the presence of noise • No crank events have been detected within a calibratable time (when events have previously been detected) • The gap in the flywheel tooth pattern has not been seen where expected, indicating the presence of noise • CKP sensor circuit fault	Check the CKP sensor fitment and condition. Check the CKP sensor and circuits. Refer to the electrical guides. Clear the DTCs, test for normal operation.
P0340	Camshaft position (CMP) sensor	• CMP sensor circuit: high resistance • CMP sensor circuit: short circuit to ground • CMP sensor fault	Refer to the approved diagnostic system for a guided diagnostic routine. Check the CMP sensor and circuits. Refer to the electrical guides. Clear the DTCs, test for normal operation.
P0380	Glow plug control circuit	• Glow plug control circuit: high resistance • Glow plug control circuit: short circuit to ground • Glow plug control circuit: short circuit to power • Glow plug relay fault	Refer to the approved diagnostic system for a guided diagnostic routine. Check the glow plug circuits. Refer to the electrical guides. Activate the glow plug relay and listen for an audible "click". Install a new relay as necessary. Clear the DTCs, test for normal operation.
P0401	Exhaust gas recirculation (EGR) insufficient flow detected	• Damaged, blocked or leaking pipes • Disconnected hose between the air intake (after the mass air flow sensor) and the turbocharger inlet • EGR valve stuck closed - If P0405 is also set	Using the manufacturer approved diagnostic system perform the **(Turbo, exhaust gas recirculation and air path dynamic test)** routine. Check the intake air path hoses and pipework. Rectify as necessary. If P0405 is also set, check the EGR valve and rectify as necessary.
P0402	Exhaust gas recirculation (EGR) excessive flow detected	• EGR valve stuck open	Using the manufacturer approved diagnostic system perform the **(Turbo, exhaust gas recirculation and air path dynamic test)** routine
P0403	Exhaust gas recirculation (EGR) valve control circuit malfunction	• EGR valve connector fault • EGR valve to engine control module (ECM) circuit: high resistance • EGR valve to ECM circuit: short circuit to ground • EGR valve to ECM circuit: short circuit to power • EGR valve to ECM circuit: open circuit	Using the manufacturer approved diagnostic system perform the **(Turbo, exhaust gas recirculation and air path dynamic test)** routine. Note that this code does not indicate a fault in the EGR valve nor the engine control module (ECM), but possibly in the connectors to these components. Check the connectors and circuits. Refer to the electrical guides. Also note that the EGR system will often set groups of codes rather than a single code. Check out P0403 first. Refer to the electrical circuit diagrams and check exhaust gas recirculation (EGR) valve control circuit - DL1-116 - and - DL1-119 - for short circuit to ground, short circuit to power, open circuit, high resistance
P0404	Exhaust gas recirculation (EGR) valve control circuit range/performance	• Excessive soot build-up on the EGR valve seat	Using the manufacturer approved diagnostic system perform the **(Turbo, exhaust gas recirculation and air path dynamic test)** routine. Refer to the electrical circuit diagrams and check exhaust gas recirculation (EGR) valve control circuit - DL1-008 - , - DL1-116 - and - DL1-119 - for short circuit to ground, short circuit to power,

DTC	Condition	Possible source	Action
			open circuit, high resistance. For further diagnostic information REFER to: Turbocharger (303-04C Fuel Charging and Controls - Turbocharger, Diagnosis and Testing).
P0405	Exhaust gas recirculation (EGR) sensor A circuit low	• EGR valve connector fault • EGR valve stuck closed	Check for P0401 if this code is logged suspect an exhaust gas recirculation (EGR) valve internal fault. Using the manufacturer approved diagnostic system perform the **(Turbo, exhaust gas recirculation and air path dynamic test)** routine. Refer to the electrical circuit diagrams and check exhaust gas recirculation (EGR) valve sensor circuit - DL1-008 - for short circuit to ground
P0406	Exhaust gas recirculation (EGR) sensor A circuit high	• EGR valve connector fault • EGR valve stuck open	Check for P0402 if this code is logged suspect an exhaust gas recirculation (EGR) valve internal fault. Using the manufacturer approved diagnostic system perform the **(Turbo, exhaust gas recirculation and air path dynamic test)** routine. Refer to the electrical circuit diagrams and check exhaust gas recirculation (EGR) valve sensor circuit - DL1-008 - for short circuit to power
P0409	Exhaust gas recirculation (EGR) sensor A circuit	• EGR valve connector fault • ECM internal fault • EGR valve to engine control module (ECM) circuit: high resistance • EGR valve to ECM circuit: short circuit to ground • EGR valve to ECM circuit: short circuit to power • EGR valve to ECM circuit: open circuit	Check the EGR valve connections and circuits first. Rectify as necessary. Using the manufacturer approved diagnostic system perform the **(Turbo, exhaust gas recirculation and air path dynamic test)** routine. Refer to the electrical circuit diagrams and check exhaust gas recirculation (EGR) valve sensor circuit - DL1-008 - for short circuit to ground, short circuit to power, open circuit, high resistance
P0480	Fan 1 control circuit	• Fan control module circuit: high resistance • Fan control module circuit: short circuit to ground • Fan control module circuit: short circuit to power • Fan motor circuit: high resistance • Fan motor circuit: short circuit to ground • Fan motor circuit: short circuit to power	Refer to the approved diagnostic system for a guided diagnostic routine. Check the fan circuits. Refer to the electrical guides. Rectify as necessary. Clear the DTCs, test for normal operation.
P0481	Fan 2 control circuit	• High fan control primary circuit	Refer to the approved diagnostic system for a guided diagnostic routine. Check the fan circuits. Refer to the electrical guides. Rectify as necessary. Clear the DTCs, test for normal operation.
P0485	Fan power/ground circuit	• Fan control module circuit: high resistance • Fan control module circuit: short circuit to ground • Fan control module circuit: short circuit to power	Check the fan circuits. Refer to the electrical guides. Rectify as necessary. Clear the DTCs, test for normal operation.
P0486	Exhaust gas recirculation (EGR) sensor B circuit	• EGR valve connector fault • EGR valve to engine control module (ECM) circuit: high resistance • EGR valve to ECM circuit: short circuit to ground • EGR valve to ECM circuit: short circuit to power • EGR valve to ECM circuit: open circuit	Check the EGR valve connections and circuits first. Rectify as necessary. Using the manufacturer approved diagnostic system perform the **(Turbo, exhaust gas recirculation and air path dynamic test)** routine. Refer to the electrical circuit diagrams and check exhaust gas recirculation throttle position sensor circuit - DL1-036 - for short circuit to ground, short circuit to power, open circuit, high resistance
P0487	Exhaust gas recirculation (EGR) throttle position control circuit	• EGR circuit: high resistance • EGR circuit: short circuit to ground	Refer to the approved diagnostic system for a guided diagnostic routine. Check the EGR valve connections and circuits first. Refer to the electrical guides. Rectify as necessary. Clear the DTCs, test for normal operation.
P0488	Exhaust gas recirculation (EGR) throttle position control range/performance	• EGR valve connector fault • EGR valve to engine control module (ECM) circuit: high resistance • EGR valve to ECM circuit: short circuit to ground • EGR valve to ECM circuit: short circuit to power • EGR valve to ECM circuit: open circuit	Check the EGR valve connections and circuits first. Rectify as necessary. Using the manufacturer approved diagnostic system perform the **(Turbo, exhaust gas recirculation and air path dynamic test)** routine. Refer to the electrical circuit diagrams and check exhaust gas recirculation (EGR) valve sensor circuit - DL1-096 - for short circuit to ground, short circuit to power, open circuit, high resistance
P0500	Vehicle speed sensor A	• The engine control module (ECM) cannot determine the vehicle speed from the anti-lock brake system (ABS) or transmission	Check for DTCs indicating a fault in the ABS or transmission. Rectify as necessary. Clear the DTCs, test for normal operation.

DTC	Condition	Possible source	Action
P0530	Air conditioning refrigerant pressure sensor circuit	• Air conditioning pressure sensor circuit: high resistance • Air conditioning pressure sensor circuit: short circuit to ground • Air conditioning pressure sensor circuit: short circuit short circuit to power • Air conditioning pressure sensor fault	Check the air conditioning refrigerant pressure sensor and circuits. Refer to the electrical guides. Rectify as necessary. Clear the DTCs, test for normal operation.
P0544	Exhaust gas temperature sensor circuit, right-hand bank, upstream sensor	• Exhaust gas temperature sensor circuit: short circuit to ground • Exhaust gas temperature sensor circuit: open circuit • Exhaust gas temperature sensor circuit: short circuit to power • Exhaust gas temperature sensor fault	Refer to the approved diagnostic system for a guided diagnostic routine. Check the exhaust gas temperature sensor and circuits. Refer to the electrical guides. Rectify as necessary. Clear the DTCs, test for normal operation.
P0545	Exhaust gas temperature sensor circuit low, right-hand bank, upstream sensor	• Exhaust gas temperature sensor circuit: short circuit to ground • Exhaust gas temperature sensor circuit: open circuit • Exhaust gas temperature sensor fault	Refer to the approved diagnostic system for a guided diagnostic routine. Check the exhaust gas temperature sensor and circuits. Refer to the electrical guides. Rectify as necessary. Clear the DTCs, test for normal operation.
P0546	Exhaust gas temperature sensor circuit high, right-hand bank, upstream sensor	• Exhaust gas temperature sensor circuit: short circuit to power • Exhaust gas temperature sensor fault	Refer to the approved diagnostic system for a guided diagnostic routine. Check the exhaust gas temperature sensor and circuits. Refer to the electrical guides. Rectify as necessary. Clear the DTCs, test for normal operation.
P0560	System voltage - range failure of the battery voltage input	• Battery voltage high or low	Check the battery condition and state of charge. Check the charging system. Rectify as necessary. Clear the DTCs, test for normal operation.
P0571	Speed control brake switch circuit failure	• Speed control brake switch circuit: high resistance • Speed control brake switch circuit: short circuit to ground • Speed control brake switch circuit: short circuit to power • Speed control brake switch failure	Check the speed control brake switch and circuits. Refer to the electrical guides. Rectify as necessary. Clear the DTCs, test for normal operation.
P0575	Speed control input circuit	• Speed control steering wheel switch circuit: high resistance • Speed control steering wheel switch circuit: short circuit to ground • Speed control steering wheel switch circuit: short circuit to power • Clockspring failure	Check the speed control steering wheel switch and circuits. Refer to the electrical guides. Rectify as necessary. Clear the DTCs, test for normal operation.
P0603	Engine control module (ECM) keep-alive memory error	• ECM power supply circuit fault • ECM fault	Check the power supplies to the ECM. Refer to the electrical guides. Rectify as necessary. Clear the DTCs, test for normal operation.
P0605	Engine control module (ECM) read-only-memory (ROM) error	• ECM flash memory error - Internal ECM fault	Refer to the warranty policy and procedures manual if an ECM is suspect
P060B	Internal control module analogue to digital processing performance	• Failure of the analogue to digital converter - Internal ECM fault	Refer to the warranty policy and procedures manual if an ECM is suspect
P0611	Fuel injector control module performance	• Fuel injectors have not been programmed • Fuel injector programming is corrupt and the injectors have reset to their default values	Programme the injectors using the approved diagnostic system. Clear the DTCs, test for normal operation.
P0622	Generator field terminal circuit	• Generator monitor circuit: high resistance • Generator monitor circuit: short circuit to ground • Generator monitor circuit: short circuit to power • Generator regulator fault	Check the generator and circuits. Refer to the electrical guides. Rectify as necessary. Clear the DTCs, test for normal operation.

DTC	Condition	Possible source	Action
		• Engine control module (ECM) fault	
P0623	Generator warning lamp circuit	• Warning lamp failure • Warning lamp circuit: high resistance • Warning lamp circuit: short circuit to ground • Warning lamp circuit: short circuit to power	Check the generator and circuits. Refer to the electrical guides. Rectify as necessary. Clear the DTCs, test for normal operation.
P0641	Sensor reference voltage A circuit	• This code indicates an internal engine control module (ECM) fault	Refer to the warranty policy and procedures manual if an ECM is suspect
P0645	Air conditioning (A/C) clutch relay control circuit	• A/C clutch relay control circuit: high resistance • A/C clutch relay control circuit: short circuit to ground • A/C clutch relay control circuit: short circuit to power • A/C clutch relay	Check the A/C clutch and circuits. Refer to the electrical guides. Check the operation of the air conditioning clutch relay. Rectify as necessary. Clear the DTCs, test for normal operation.
P0648	Immobilizer lamp control circuit	• Immobilizer lamp control circuit: high resistance • Immobilizer lamp control circuit: short circuit to ground • Immobilizer lamp control circuit: short circuit to power • Lamp failure	Check the immobilizer lamp and circuits. Refer to the electrical guides. Rectify as necessary. Clear the DTCs, test for normal operation.
P0685	Engine control module (ECM) main relay control circuit open	• Poor battery connections at the battery or engine block • ECM relay control circuit: high resistance • ECM relay control circuit: short circuit to ground • ECM relay control circuit: short circuit to power • ECM relay fault	Check the connections at the battery and engine block. Check the relay and circuits. Refer to the electrical guides. Rectify as necessary. Clear the DTCs, test for normal operation.
P0700	Transmission control system (MIL Request)	• TCM reports unspecified error to ECM and requests MIL illumination	Check the TCM for DTCs. Clear the DTCs, test for normal operation.
P1000	Not all diagnostic monitors have run	• One or more on-board diagnostic routines have not completed	This code does not indicate a fault, just that additional drive cycles are required.
P1200	Injector Range/Performance	• Injector fault	This DTC would be accompanied by the code P2336, P2337, P2338 or P2339 indicating which injector is faulty. Install a new injector(s) as necessary. REFER to: Fuel Injector (303-04B Fuel Charging and Controls - 2.0L Duratorq-TDCi/2.2L Duratorq-TDCi (110kW/150PS) - Puma, Removal and Installation). Clear the DTCs, test for normal operation.
P1211	Injector control pressure higher/lower than desired with the engine running/fuel system contamination	• Contaminated fuel • Air ingress • High-pressure injector leak • Fuel pressure sensor/circuit fault • Fuel metering valve/circuit fault • Fuel pump fault	Check for contaminated fuel. Draw off approximately 1 litre (2.11 pints) of fuel into a clear container and allow to settle for 1 minute. Examine the fuel for separation indicating contamination. Check the low-pressure fuel system for air ingress. Check for evidence of a high-pressure fuel leak. Rectify as necessary. Check the fuel pressure sensor, metering valve and circuits. Refer to the electrical guides. Check for DTCs indicating a pump fault.
P1288	Cylinder head temperature (CHT) sensor out of selftest range	• Coolant low/contaminated • Poor thermostat operation • CHT sensor circuit fault • CHT sensor fault	Check the coolant level and condition, check the thermostat operation. Rectify as necessary. Check the CHT sensor and circuits. Refer to the electrical guides. Clear the DTCs, test for normal operation.
P132A	Turbocharger boost system performance	• Turbocharger actuator fault	Carry out visual inspection of the rotary electronic actuator arm during ignition state on/off. Ignition **on** actuator will retract under smooth operation to a set position. Ignition **off** actuator will retract to the fully open position. If this is not observed inspect the turbo charger rotary electronic actuator arm for corrosion and check for ease of vane movement. Using the manufacturer approved diagnostic system perform the **(Turbo, exhaust gas recirculation and air path dynamic test)** routine. For further diagnostic information REFER to: Turbocharger (303-04C Fuel Charging and Controls - Turbocharger, Diagnosis and Testing).

DTC	Condition	Possible source	Action
P132B	Turbocharger boost system performance	• Memory check failure during initialization • Turbocharger vanes sticking • Turbocharger rotary electronic actuator internal failure	Carry out visual inspection of the rotary electronic actuator arm during ignition state on/off. Ignition **on** actuator will retract under smooth operation to a set position. Ignition **off** actuator will retract to the fully open position. If this is not observed inspect the turbo charger rotary electronic actuator arm for corrosion and check for ease of vane movement. Clear the DTCs cycle the ignition and recheck. If the DTCs are still present after 3 attempts, check the turbocharger vanes for deposit build-up, a foreign body or damage to the compressor/turbine wheels/housing as mechanism may be sticking. For further diagnostic information REFER to: Turbocharger (303-04C Fuel Charging and Controls - Turbocharger, Diagnosis and Testing).
P132C	Turbocharger boost system voltage	• Battery voltage out of range	Refer to the approved diagnostic system for a guided diagnostic routine. Check the battery condition and state of charge. Check the turbocharger circuits. Refer to the electrical guides. Rectify as necessary. Clear the DTCs, test for normal operation.
P138D	Turbocharger boost system temperature too high	• Engine overheating as a result of exhaust gas leakage • Carbon deposits on the exhaust manifold • Turbocharger actuator fault	Refer to the approved diagnostic system for a guided diagnostic routine. Check the exhaust manifold for leakage/carbon deposits. Clear the DTCs, test for normal operation. If the fault persists, install a new turbocharger. REFER to: Turbocharger (303-04C Fuel Charging and Controls - Turbocharger, Removal and Installation). Clear the DTCs, test for normal operation.
P1403	Differential pressure feedback sensor hoses reversed	• DPF pressure sensor (delta pressure sensor) crossed hose fault	Check the correct connection of the hoses to the DPF pressure sensor. Rectify as necessary. Clear the DTCs, test for normal operation.
P1543	Engine coolant heater A control circuit	• Engine coolant heater A control circuit: high resistance	Refer to the approved diagnostic system for a guided diagnostic routine. Check the coolant heater and circuits. Refer to the electrical guides. Rectify as necessary. Clear the DTCs, test for normal operation.
P1544	Engine coolant heater B control circuit	• Engine coolant heater B control circuit: high resistance	Refer to the approved diagnostic system for a guided diagnostic routine. Check the coolant heater and circuits. Refer to the electrical guides. Rectify as necessary. Clear the DTCs, test for normal operation.
P1576	Pedal position not available (accelerator pedal position (APP) sensor failed on more than one track)	• APP sensor circuit fault • APP sensor fault	Refer to the approved diagnostic system for a guided diagnostic routine. Check the APP sensor and circuits. Refer to the electrical guides. Rectify as necessary. Clear the DTCs, test for normal operation.
P1582	Electronic throttle monitor data available	• Inertia switch tripped	Check the inertia switch status and circuits. Refer to the electrical guides. Rectify as necessary. Clear the DTCs, test for normal operation.
P1630	Engine control module (ECM) internal voltage reference	• Internal ECM fault	Refer to the approved diagnostic system for a guided diagnostic routine. Refer to the warranty policy and procedures manual if an ECM is suspect.
P1632	Smart generator output circuit	• Generator circuit: high resistance • Generator circuit: short circuit to ground • Generator circuit: short circuit to power • Generator regulator fault	Refer to the approved diagnostic system for a guided diagnostic routine. Check the generator and circuits. Refer to the electrical guides. Rectify as necessary. Clear the DTCs, test for normal operation.
P1635	Tire/Axle ratio out of acceptable range	• The tire size stored in the vehicle identification (VID) block is out of range	Check that the tires fitted to the vehicle are of the correct specification. Rectify as necessary.
P1643	CAN link engine control module/transmission control module circuit/network	• CAN H open circuit failure between ECM and TCM • CAN L open circuit failure between ECM and TCM	Check the CAN circuits between the engine control module (ECM) and the TCM. Rectify as necessary. Clear the DTCs, test for normal operation.
P1676	Injector Data Incompatible	• Injector corrections download failed	Re-enter the injector codes using the approved diagnostic system. Clear the DTCs, test for normal operation.
P1700	Transmission indeterminate failure (failed to neutral)	• TCM has identified a failure, the ECM is required to record this failure	Check the TCM for DTCs. Clear the DTCs, test for normal operation.
P179A	Controller area network (CAN) link, turbocharger boost control system	• CAN feedback messages not received	Using the manufacturer approved diagnostic system, complete a CAN network integrity test. Carry out visual inspection of the rotary electronic actuator arm during ignition state on/off. Ignition **on** actuator will retract under smooth operation to a set position. Ignition **off** actuator will retract to the fully open position. If this is not observed inspect the turbo charger rotary electronic actuator arm for corrosion and check for ease of vane movement. Using the manufacturer approved diagnostic system perform the **(Turbo, exhaust gas recirculation and air path dynamic test)** routine. For further diagnostic information REFER to: Turbocharger (303-04C Fuel Charging and Controls - Turbocharger, Diagnosis and Testing).
P1816	Transmission Neutral Safety Switch Circuit Failure	• Start lock switch plausibility failure • Start lock STLK circuit: open circuit • Start lock STLK circuit: short to ground • Start lock STLK circuit:	Check the Start lock switch and circuits. Refer to the electrical guides. Rectify as necessary. Clear the DTCs, test for normal operation. Refer to the warranty policy and procedures manual if an ECM / TCM is suspect

DTC	Condition	Possible source	Action
		short to power • Failure of ECM • Failure of TCM	
P1937	Fuel fired heater (FFH) control circuit	• FFH supply or ground circuit fault • FFH control circuit: high resistance • FFH control circuit: short circuit to ground • FFH control circuit: short circuit to power • FFH control module fault	Refer to the approved diagnostic system for a guided diagnostic routine. Check the FFH and circuits. Refer to the electrical guides. Rectify as necessary. Clear the DTCs, test for normal operation.
P2031	Right-hand bank exhaust gas temperature sensor circuit, sensor 2	• Exhaust gas temperature sensor circuit: short circuit to ground • Exhaust gas temperature sensor circuit: open circuit • Exhaust gas temperature sensor circuit: short circuit to power • Exhaust gas temperature sensor fault	Refer to the approved diagnostic system for a guided diagnostic routine. Check the exhaust gas temperature sensor and circuits. Refer to the electrical guides. Rectify as necessary. Clear the DTCs, test for normal operation.
P2032	Right-hand bank exhaust gas temperature sensor circuit low, sensor 2	• Exhaust gas temperature sensor circuit: short circuit to ground • Exhaust gas temperature sensor fault	Refer to the approved diagnostic system for a guided diagnostic routine. Check the exhaust gas temperature sensor and circuits. Refer to the electrical guides. Rectify as necessary. Clear the DTCs, test for normal operation.
P2033	Right-hand bank exhaust gas temperature sensor circuit high, sensor 2	• Exhaust gas temperature sensor circuit: short circuit to power • Exhaust gas temperature sensor fault	Refer to the approved diagnostic system for a guided diagnostic routine. Check the exhaust gas temperature sensor and circuits. Refer to the electrical guides. Rectify as necessary. Clear the DTCs, test for normal operation.
P2080	Right-hand bank exhaust gas temperature sensor circuit range/performance, sensor 1	• Exhaust gas temperature sensor circuit: short circuit to ground • Exhaust gas temperature sensor circuit: open circuit • Exhaust gas temperature sensor circuit: short circuit to power • Exhaust gas temperature sensor fault	Refer to the approved diagnostic system for a guided diagnostic routine. Check the exhaust gas temperature sensor and circuits. Refer to the electrical guides. Rectify as necessary. Clear the DTCs, test for normal operation.
P2081	Right-hand bank exhaust gas temperature sensor circuit intermittent, sensor 1	• Exhaust gas temperature sensor circuit: intermittent high resistance • Exhaust gas temperature sensor fault	Refer to the approved diagnostic system for a guided diagnostic routine. Check the exhaust gas temperature sensor and circuits. Refer to the electrical guides. Rectify as necessary. Clear the DTCs, test for normal operation.
P2085	Right-hand bank exhaust gas temperature sensor circuit intermittent, sensor 2	• Exhaust gas temperature sensor circuit: intermittent high resistance • Exhaust gas temperature sensor fault	Refer to the approved diagnostic system for a guided diagnostic routine. Check the exhaust gas temperature sensor and circuits. Refer to the electrical guides. Rectify as necessary. Clear the DTCs, test for normal operation.
P2288	Injector control pressure too high	• Fuel contaminated • Fuel pressure sensor circuit: high resistance • Fuel pressure sensor circuit: short circuit to ground • Fuel pressure sensor circuit: short circuit to power	Check for contaminated fuel. Draw off approximately 1 litre (2.11 pints) of fuel into a clear container and allow to settle for 1 minute. Examine the fuel for separation indicating contamination. Rectify as necessary. Check the fuel pressure sensor and circuits. Refer to the electrical guides. Rectify as necessary. Clear the DTCs, test for normal operation.
P2291	Injector control pressure too low - engine cranking	• Low fuel level • Blocked, kinked or crushed fuel lines • Fuel pressure sensor circuit fault • Inlet metering valve fault • Injector leaking • Fuel pump fault • Engine control module (ECM) fault	Check the fuel level. Check the fuel lines for damage, etc. Rectify as necessary. Check the fuel pressure sensor and circuits. Refer to the electrical guides. Check for DTCs indicating an inlet metering valve, injector or pump fault. Rectify as necessary. Clear the DTCs, test for normal operation. Refer to the warranty policy and procedures manual if an ECM is suspect.
P2336	Cylinder 1 above knock threshold - knock sensor trim for cylinder 1 invalid	• Natural wear of the injector • Fuel contaminated • Blocked or dirty fuel injector(s) • Injector circuit fault • Injector fault	Re-enter the injector codes using the approved diagnostic system. If after reprogramming and clearing the DTCs the DTC reoccurs, check for contaminated fuel. Draw off approximately 1 litre (2.11 pints) of fuel into a clear container and allow to settle for 1 minute. Examine the fuel for separation indicating contamination. Rectify as necessary. Carry out the cylinder balance check. Check the injector circuits. Refer to the electrical guides. Rectify as necessary. Clear

DTC	Condition	Possible source	Action
P2337	Cylinder 2 above knock threshold - knock sensor trim for cylinder 2 (injector 4) invalid	• Natural wear of the injector • Fuel contaminated • Blocked or dirty fuel injector(s) • Injector circuit fault • Injector fault	the DTCs, test for normal operation.
P2338	Cylinder 3 above knock threshold - knock sensor trim for cylinder 3 (injector 2) invalid	• Natural wear of the injector • Fuel contaminated • Blocked or dirty fuel injector(s) • Injector circuit fault • Injector fault	
P2339	Cylinder 4 above knock threshold - knock sensor trim for cylinder 4 (injector 3) invalid	• Natural wear of the injector • Fuel contaminated • Blocked or dirty fuel injector(s) • Injector circuit fault • Injector fault	
P242F	Diesel particulate filter (DPF) restriction - ash accumulation	• DPF blocked	Install a new DPF as necessary. REFER to: Diesel Particulate Filter (DPF) (309-00 Exhaust System, Removal and Installation). Clear the DTCs, test for normal operation.
P244A	Diesel particulate filter (DPF) differential pressure too low	• DPF leaking	Install a new DPF as necessary. REFER to: Diesel Particulate Filter (DPF) (309-00 Exhaust System, Removal and Installation). Clear the DTCs, test for normal operation.
P244B	Diesel particulate filter (DPF) differential pressure too high	• DPF overloaded	Carry out the regeneration procedure. Clear the DTCs, test for normal operation.
P244C	Exhaust temperature too low for particulate filter regeneration	• Insufficient mileage/speed for regeneration	Carry out the regeneration procedure. Clear the DTCs, test for normal operation.
P2452	Diesel particulate filter (DPF) pressure sensor A circuit	• DPF pressure sensor (delta pressure sensor) circuit fault • DPF pressure sensor (delta pressure sensor)fault	Check the DPF pressure sensor (delta pressure sensor)and circuits. Refer to the electrical guides. Rectify as necessary.
P2453	Diesel particulate filter (DPF) pressure sensor A circuit range/performance	• DPF pressure sensor (delta pressure sensor) hose fault • DPF pressure sensor (delta pressure sensor)fault	Refer to the approved diagnostic system for a guided diagnostic routine. Check the condition and fitment of the DPF pressure sensor (delta pressure sensor) and hoses. Rectify as necessary.
P2623	Injector control pressure regulator open	• Inlet metering valve fault • Inlet metering valve circuit fault	Check the inlet metering valve and circuits. Refer to the electrical guides. Rectify as necessary. Clear the DTCs, test for normal operation.

Published: 11-May-2011

Electronic Engine Controls - 2.0L Duratorq-TDCi / 2.2L Duratorq-TDCi (110kW / 150PS) - Puma - Camshaft Position (CMP) Sensor

Removal and Installation

Removal

1. Remove the air cleaner.
   For additional information, refer to: Air Cleaner (303-12B Intake Air Distribution and Filtering - 2.0L Duratorq-TDCi/2.2L Duratorq-TDCi (110kW/150PS) - Puma, Removal and Installation).
2. Disconnect the electrical connector.

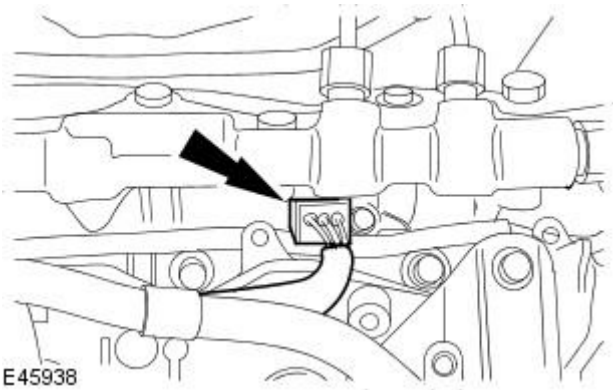

3. Remove the camshaft position (CMP) sensor.

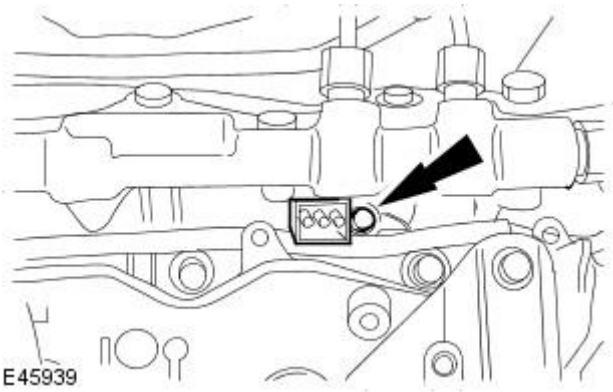

Installation

1. To install, reverse the removal procedure.
   - Tighten to 9 Nm.

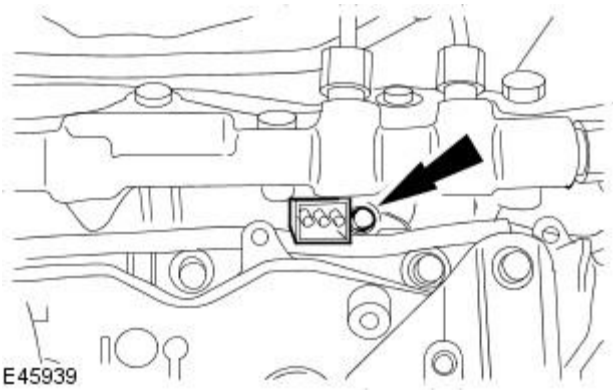

Electronic Engine Controls - 2.0L Duratorq-TDCi / 2.2L Duratorq-TDCi (110kW / 150PS) - Puma - Catalytic Converter Temperature Sensor

Removal and Installation

Special Tool(s)	
303-1184 E67739	Exhaust gas temperature sensor wrench 303-1184

Removal

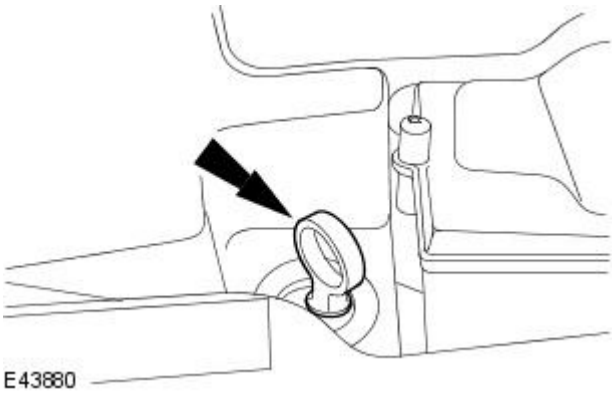

1. Remove the oil level indicator.

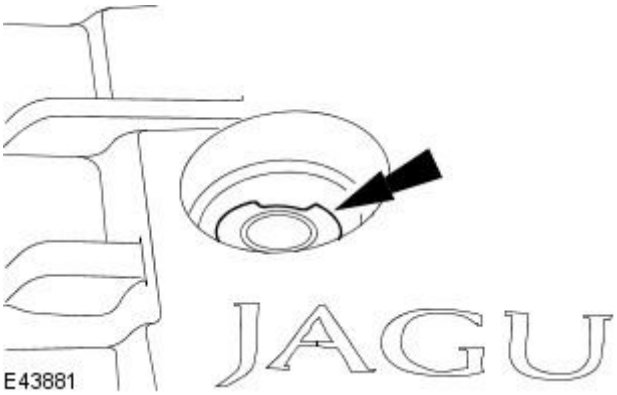

2. Remove the oil filler cap.

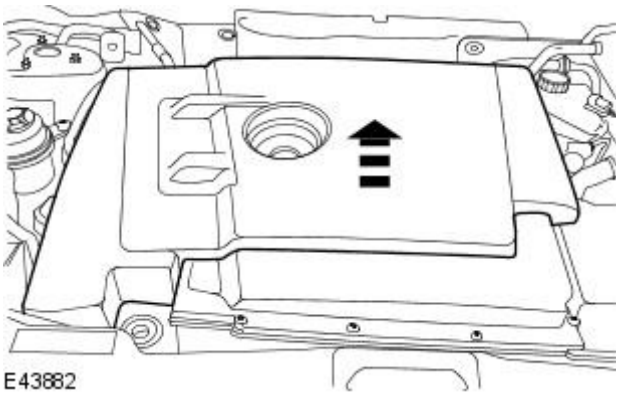

3. NOTE: Install the oil filler cap and oil level indicator to prevent foreign material entering the valve cover.

Remove the engine cover.

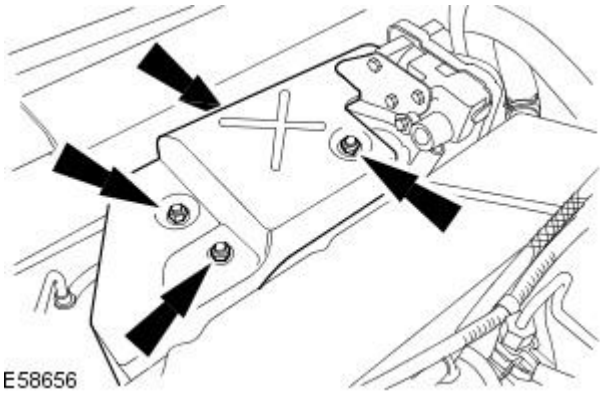

4. Remove the turbocharger heatshield.

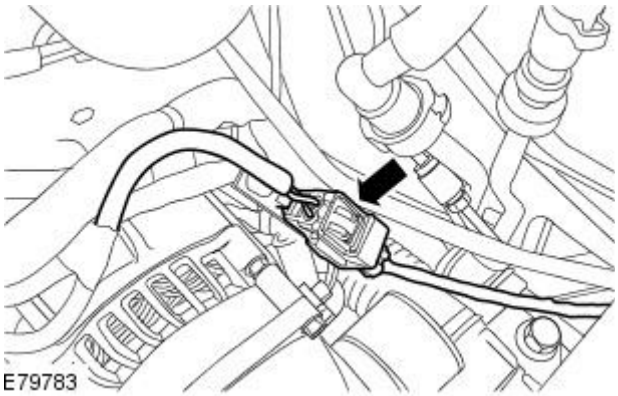

5. Disconnect the catalytic converter temperature sensor electrical connector.

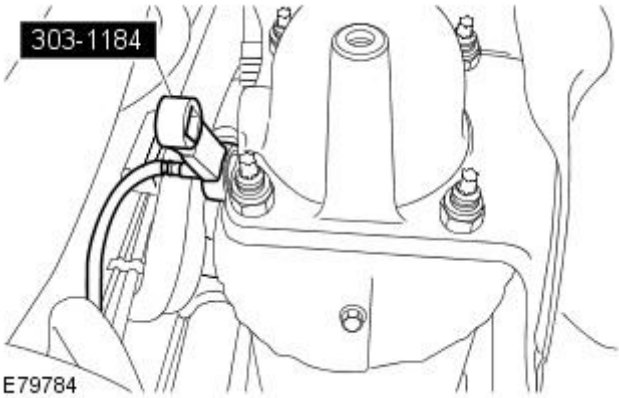

6. Remove the catalytic converter temperature sensor.

Installation

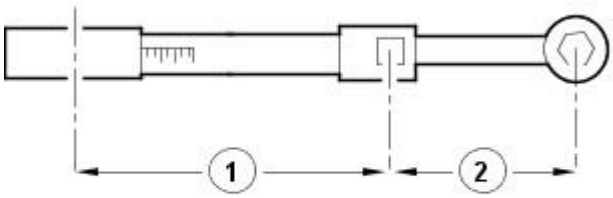

1. CAUTION: Make sure the torque wrench setting procedure is followed correctly. Failure to follow this instruction may result in damage to the vehicle.

Calculate the setting for the torque wrench.

- Stage 1: Multiply the required torque by the effective length of the torque wrench (1).
- Stage 2: Add the effective length of the special tool (2) to the effective length of the torque wrench.
- Stage 3: Divide the total of stage 1 by the total of stage 2.
- Stage 4: Set the torque wrench to the figure arrived at in stage 3.

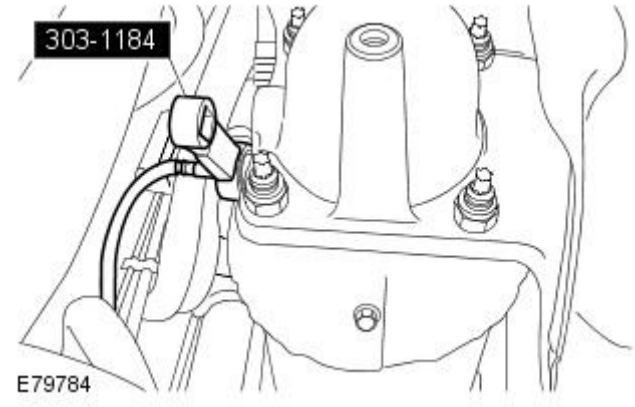

2. CAUTION: Make sure the torque wrench setting procedure is followed correctly. Failure to follow this instruction may result in damage to the vehicle.

Install the catalytic converter temperature sensor.

- Tighten to 35 Nm.

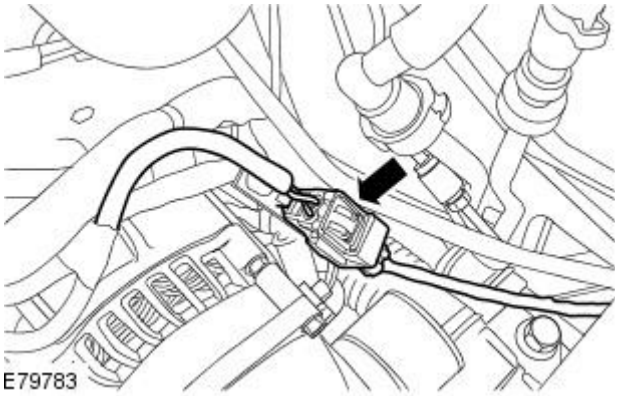

3. Connect the catalytic converter temperature sensor electrical connector.

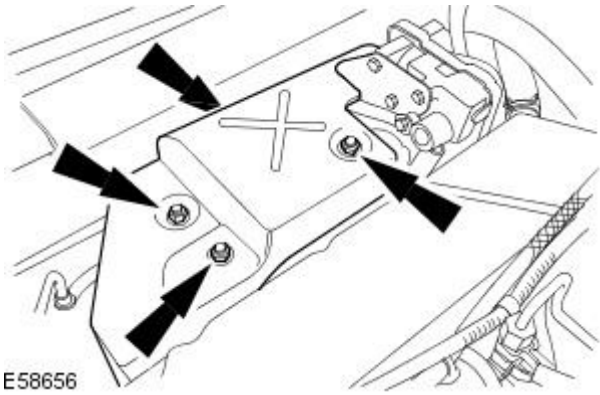

4. Install the turbocharger heatshield.

- Tighten to 9 Nm.

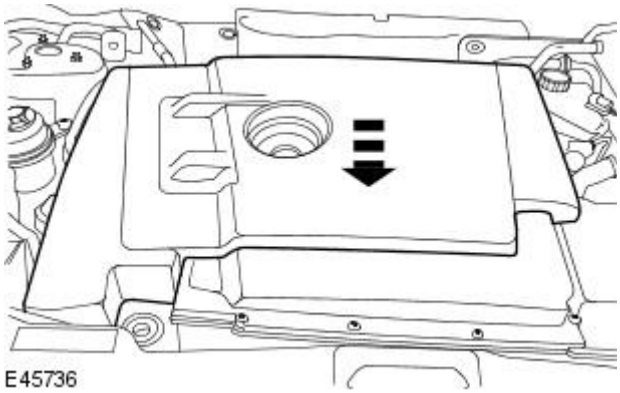

5. NOTE: Remove the oil filler cap and oil level indicator.

Install the engine cover.

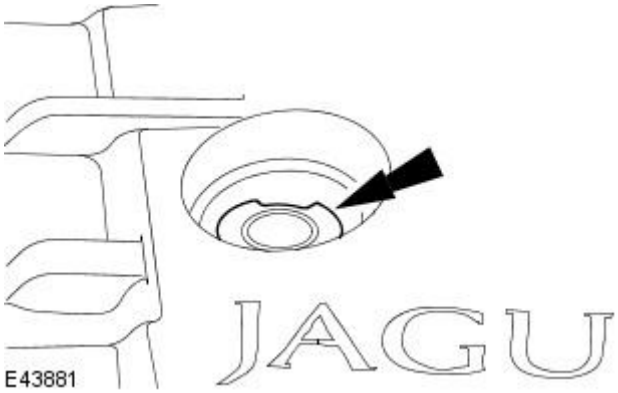

6. Install the oil filler cap.

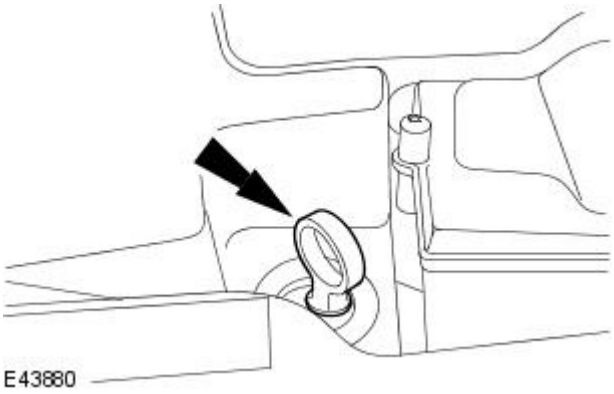

7. Install the oil level indicator.

Electronic Engine Controls - 2.0L Duratorq-TDCi / 2.2L Duratorq-TDCi (110kW / 150PS) - Puma - Crankshaft Position (CKP) Sensor

Removal and Installation

Removal

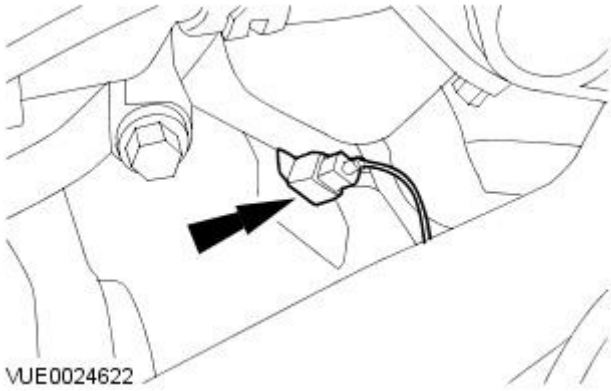

1. Disconnect the electrical connector.

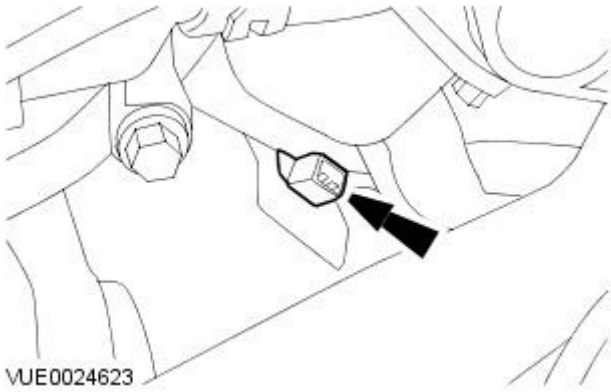

2. Remove and discard the crankshaft position (CKP) sensor.

Installation

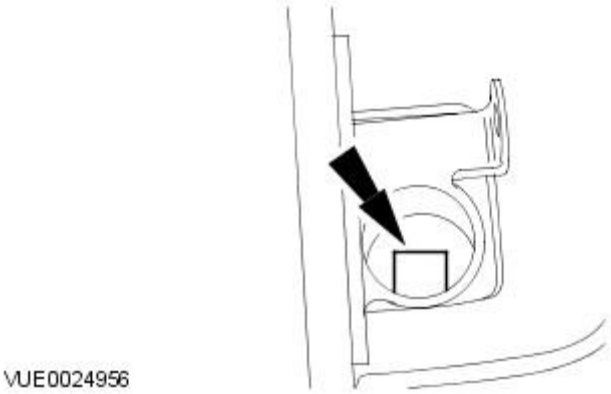

1. NOTE: Only turn the engine in the normal direction of rotation

Turn the engine until a flywheel trigger tooth is visible through the CKP sensor housing.

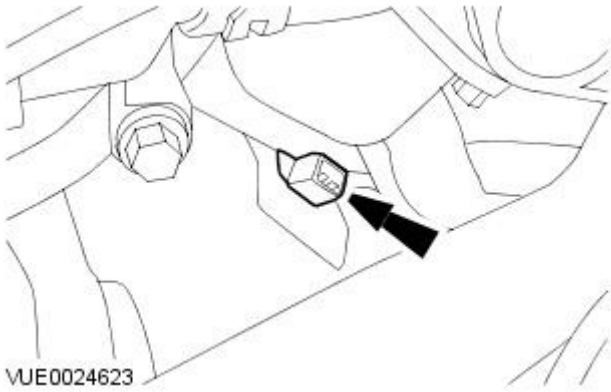

2. CAUTION: The CKP sensor tip must rest on a flywheel trigger tooth. Incorrect installation may result in the CKP sensor being damaged.

• NOTE: Make sure that the CKP sensor housing is clean and free from foreign material.

Install the CKP sensor.

- Tighten to 7 Nm.

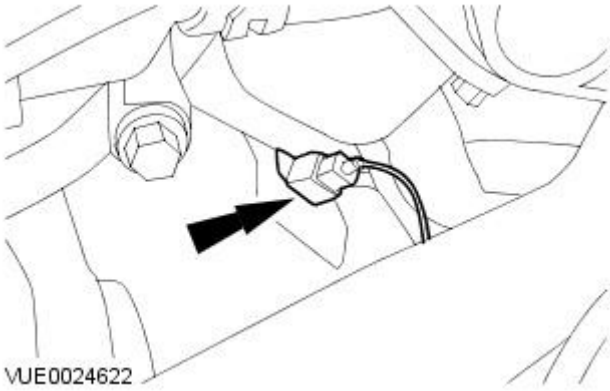

3. Connect the CKP sensor electrical connector.

Published: 11-May-2011

Electronic Engine Controls - 2.0L Duratorq-TDCi / 2.2L Duratorq-TDCi (110kW / 150PS) - Puma - Cylinder Head Temperature (CHT) Sensor

Removal and Installation

Special Tool(s)	
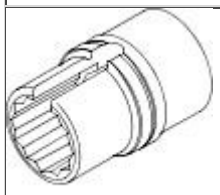 303680	Socket, CHT Sensor 303-680 (21-239)

Removal

1. Remove the air cleaner.
   For additional information, refer to: Air Cleaner (303-12B Intake Air Distribution and Filtering - 2.0L Duratorq-TDCi/2.2L Duratorq-TDCi (110kW/150PS) - Puma, Removal and Installation).
2. Detach the power assisted steering fluid pipe.

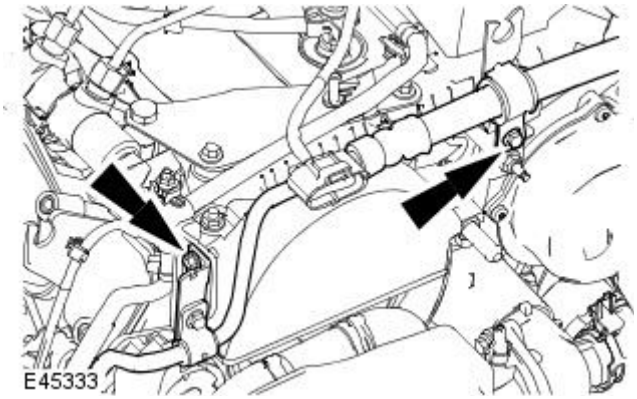

3. Remove the power steering pump belt cover retaining nut.

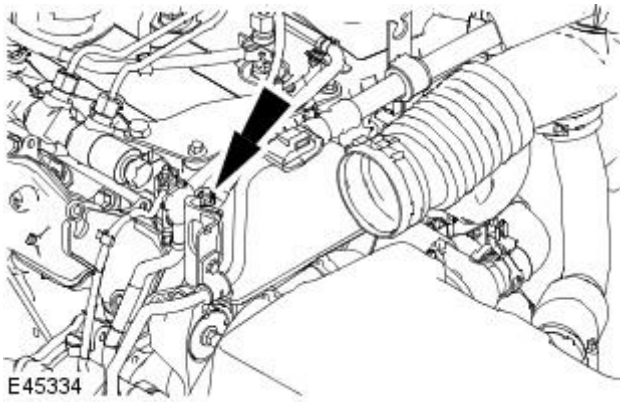

4. Remove the power steering pump belt cover.

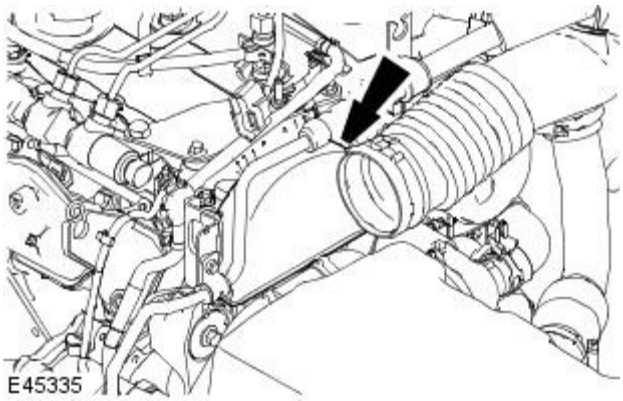

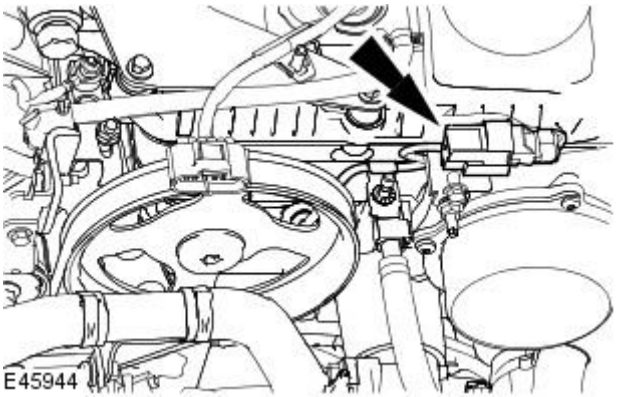

5. Detach the cyclinder head temperature (CHT) sensor electrical connector.

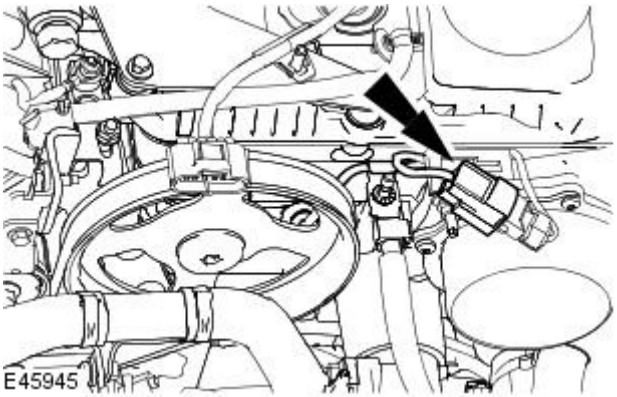

6. Disconnect the CHT sensor electrical connector.

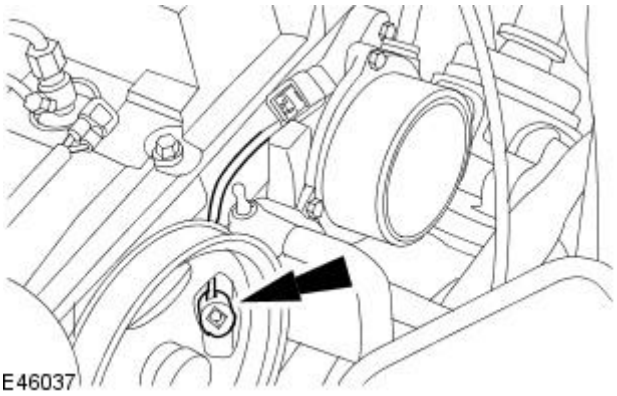

7. Using the special tool 303-680, remove the CHT sensor.

Installation

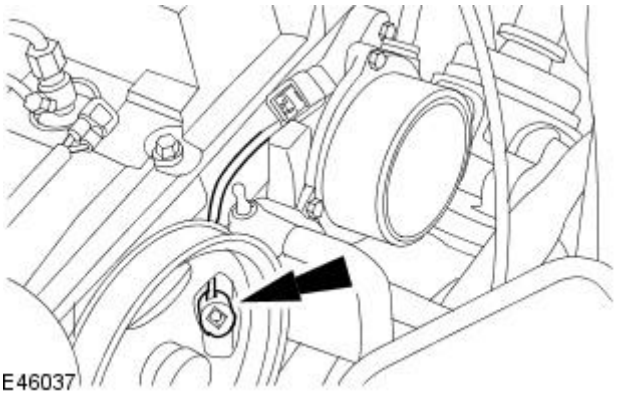

1. To install, reverse the removal procedure.

- Tighten to 10 Nm.

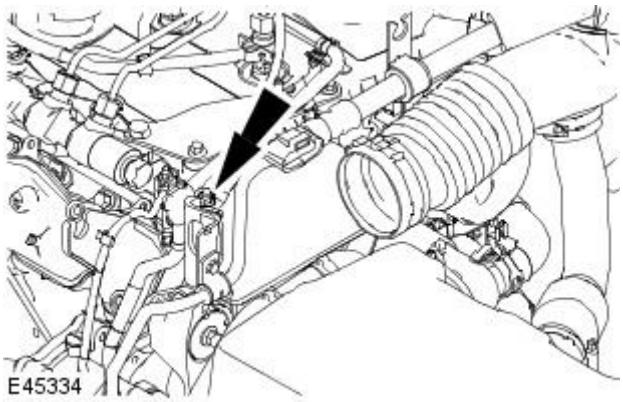

2. Tighten to 10 Nm.

Electronic Engine Controls - 2.0L Duratorq-TDCi / 2.2L Duratorq-TDCi (110kW / 150PS) - Puma - Diesel Particulate Filter (DPF) Temperature Sensor

Removal and Installation

Removal

1. Remove the air deflector.
   For additional information, refer to: Air Deflector - 2.0L Duratorq-TDCi/2.2L Duratorq-TDCi (110kW/150PS) - Puma (501-02 Front End Body Panels, Removal and Installation).
2. Disconnect the diesel particulate filter (DPF) temperature sensor electrical connector.

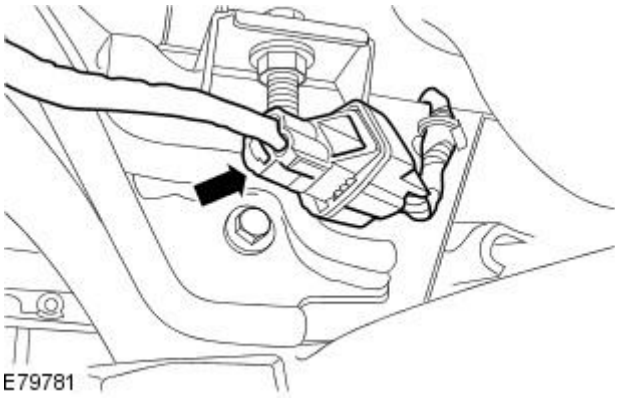

3. Remove the DPF temperature sensor.

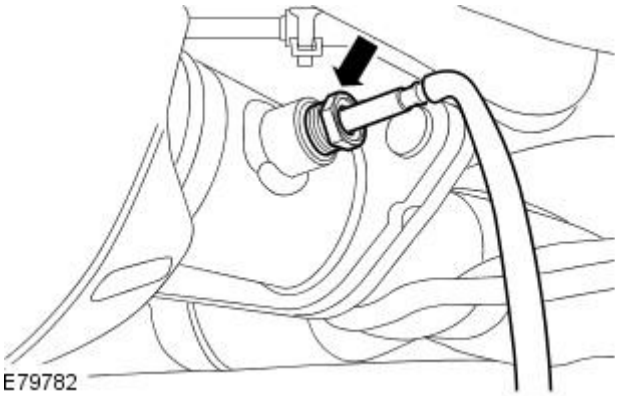

Installation

1. To install, reverse the removal procedure.
   - Tighten to 35 Nm.

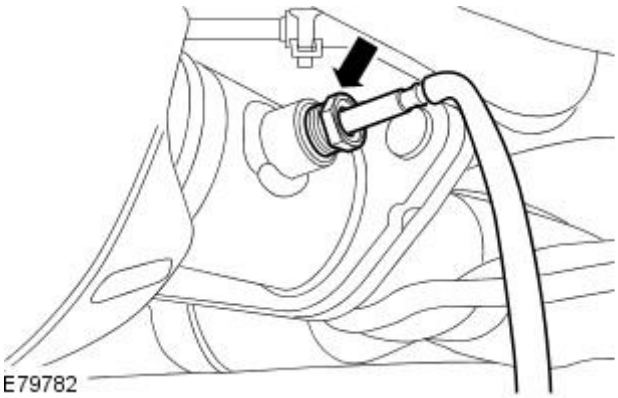

Electronic Engine Controls - 2.0L Duratorq-TDCi / 2.2L Duratorq-TDCi (110kW / 150PS) - Puma - Engine Control Module (ECM)

Removal and Installation

Removal

1. Disconnect the battery ground cable. For additional information, refer to For additional information, refer to: Battery Disconnect and Connect (414-01 Battery, Mounting and Cables, General Procedures).
2. Remove the engine wiring harness trim panel.

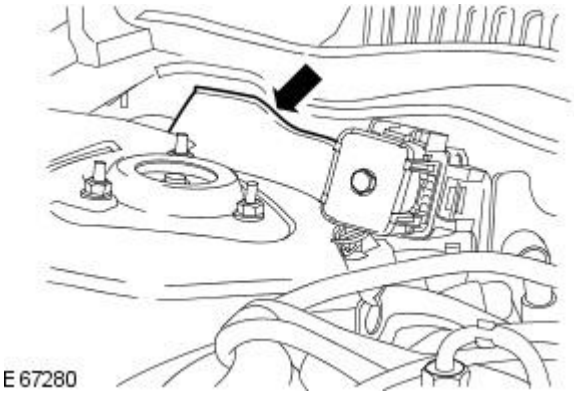

3. Disconnect the engine control module (ECM) electrical connector.

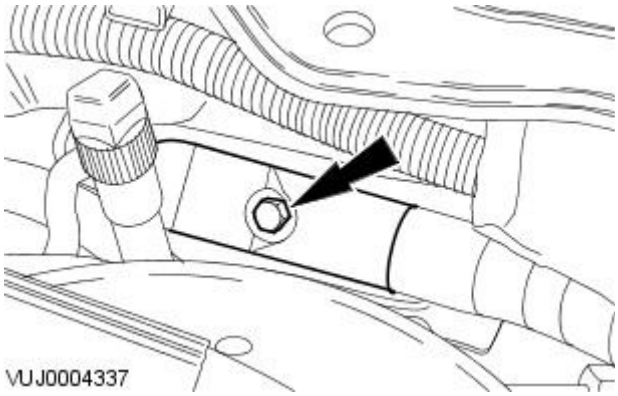

4. Remove the instrument cluster lower trim panel.

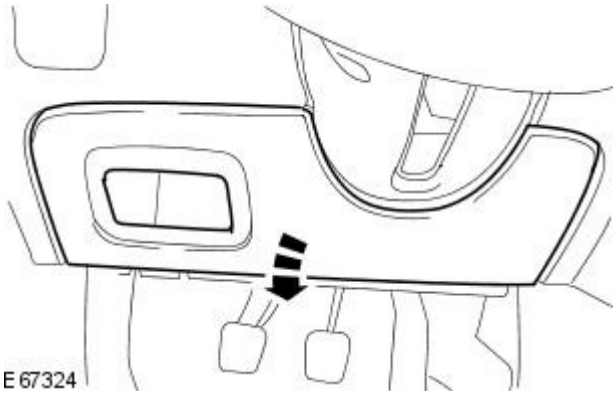

5. Remove the trim panel.

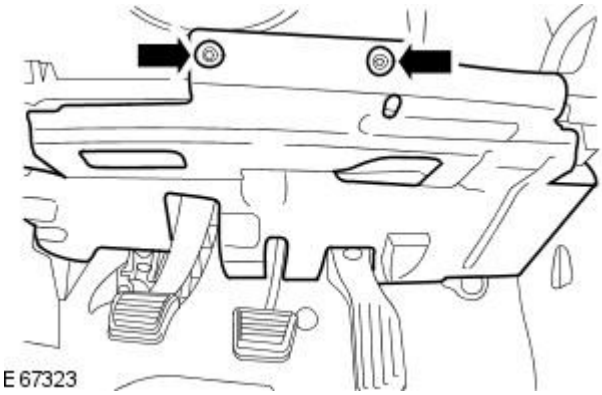

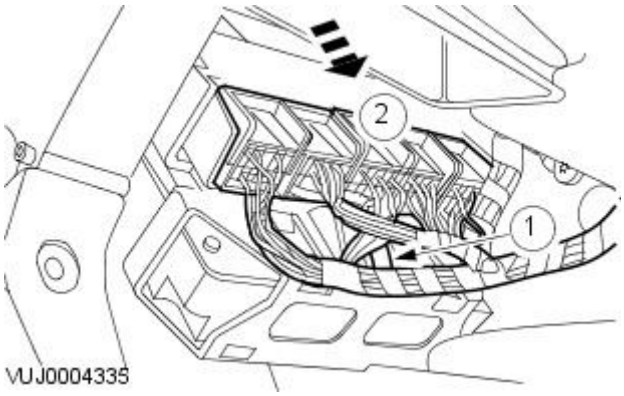

6. Detach the generic electronic module (GEM) from the ECM.

1. Release the GEM locking tang.
2. Detach the GEM from the ECM.

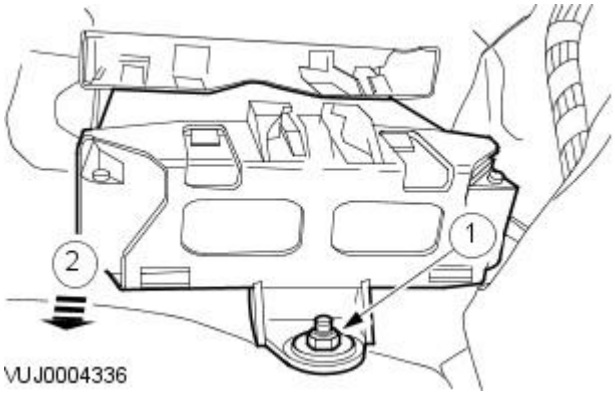

7. Remove the ECM.

1. Remove the ECM retaining nut.
2. Remove the ECM.

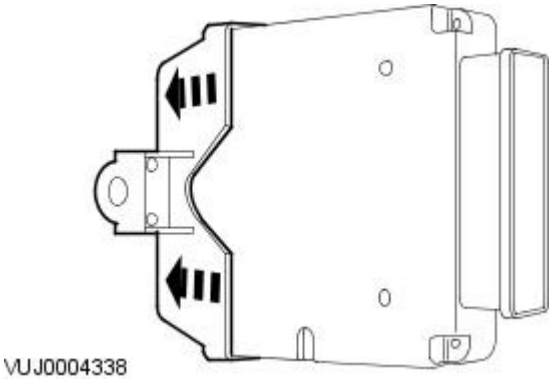

8. Remove the ECM from the ECM retaining bracket.

Installation

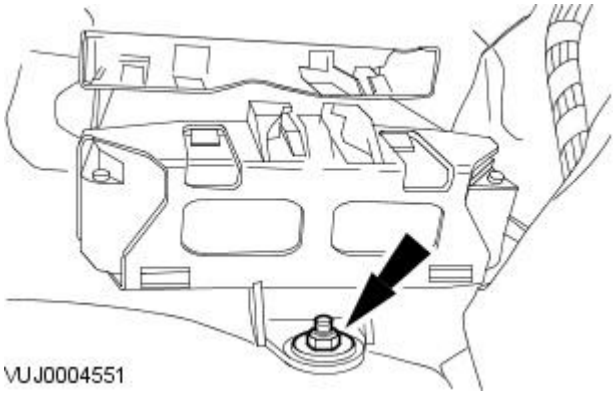

1. To install, reverse the removal procedure.

- Tighten to 10 Nm.

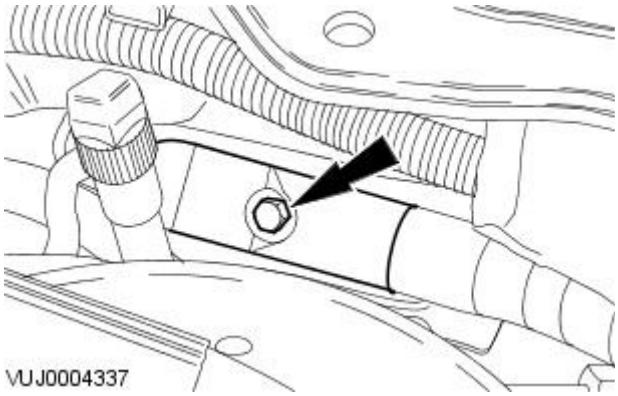

2. CAUTION: Make sure that the electrical connector locates correctly in the ECM. Do not force or overtighten the electrical connector.

Tighten to 10 Nm.

Electronic Engine Controls - 2.0L Duratorq-TDCi / 2.2L Duratorq-TDCi (110kW / 150PS) - Puma - Engine Oil Pressure (EOP) Sensor

Removal and Installation

Removal

1. Raise and support the vehicle.
   For additional information, refer to: Lifting (100-02 Jacking and Lifting, Description and Operation).
2. Remove the engine undertray.
   For additional information, refer to: Air Deflector - 2.0L Duratorq-TDCi/2.2L Duratorq-TDCi (110kW/150PS) - Puma (501-02 Front End Body Panels, Removal and Installation).
3. Disconnect the engine oil pressure (EOP) sensor electrical connector.

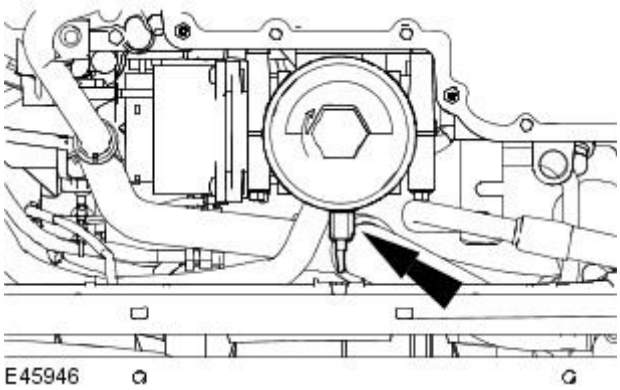

4. Remove the EOP sensor.

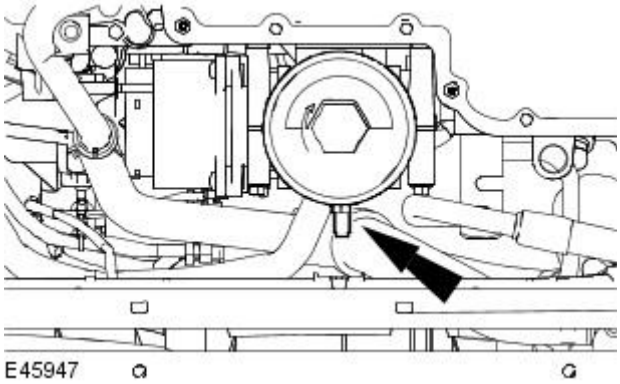

Installation

1. To install, reverse the removal procedure.
   - Tighten to 15 Nm.

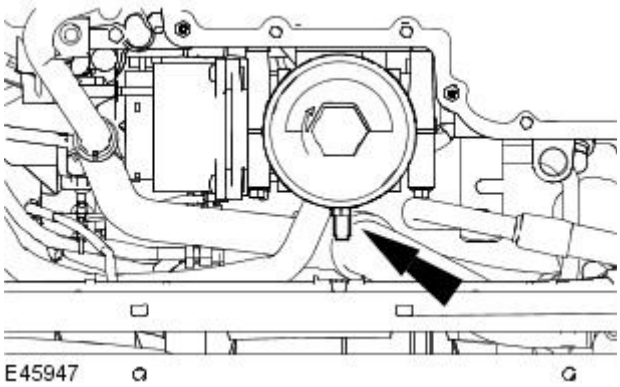

Electronic Engine Controls - 2.0L Duratorq-TDCi / 2.2L Duratorq-TDCi (110kW / 150PS) - Puma - Fuel Temperature Sensor

Removal and Installation

Removal

1. Remove the air cleaner.
   For additional information, refer to: Air Cleaner (303-12B Intake Air Distribution and Filtering - 2.0L Duratorq-TDCi/2.2L Duratorq-TDCi (110kW/150PS) - Puma, Removal and Installation).
2. Detach the wiring harness.

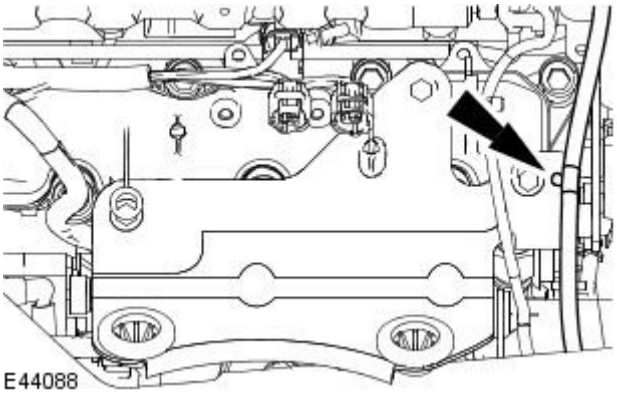

3. Remove the air cleaner mount bracket.

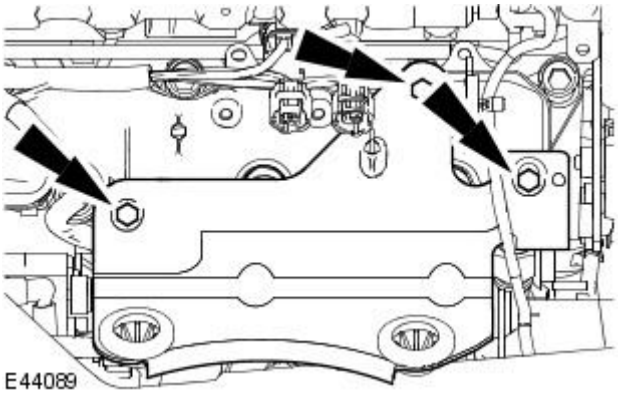

4. Disconnect the electrical connector.

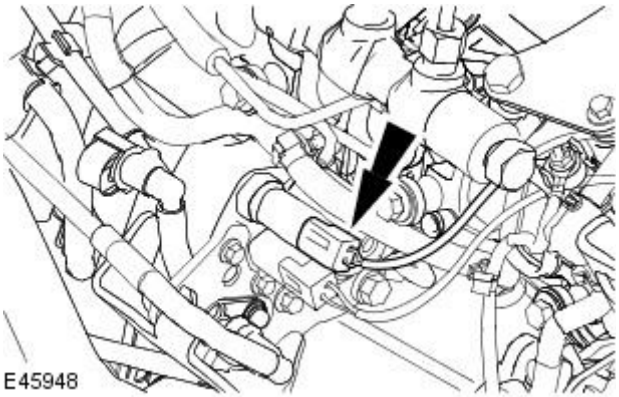

5. Remove the fuel temperature sensor.

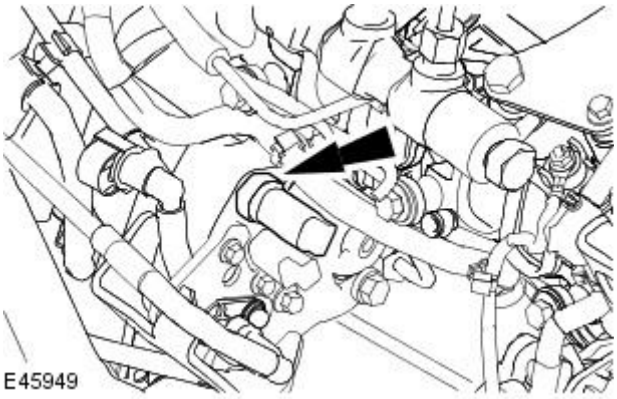

Installation

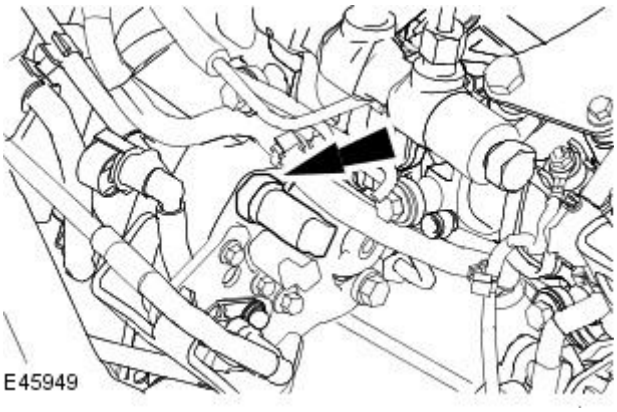

1. To install, reverse the removal procedure.

- Tighten to 15 Nm.

Electronic Engine Controls - 2.0L Duratorq-TDCi / 2.2L Duratorq-TDCi (110kW / 150PS) - Puma - Knock Sensor (KS)

Removal and Installation

Removal

1. Remove the air cleaner.
   For additional information, refer to: Air Cleaner (303-12B Intake Air Distribution and Filtering - 2.0L Duratorq-TDCi/2.2L Duratorq-TDCi (110kW/150PS) - Puma, Removal and Installation).
2. Detach the wiring harness.

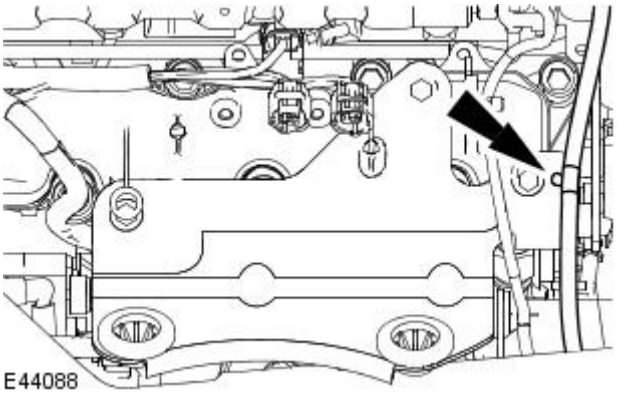

3. Remove the air cleaner mount bracket.

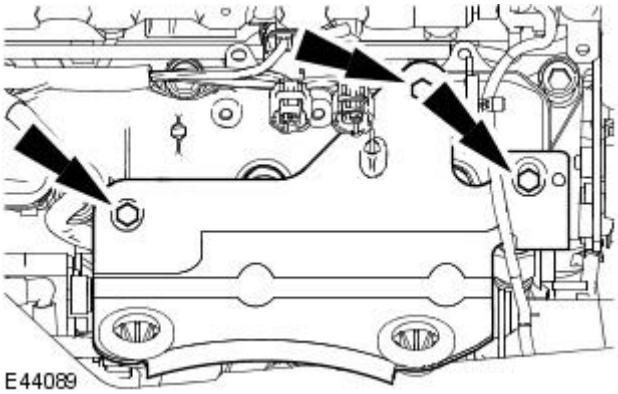

4. Detach the wiring harness.

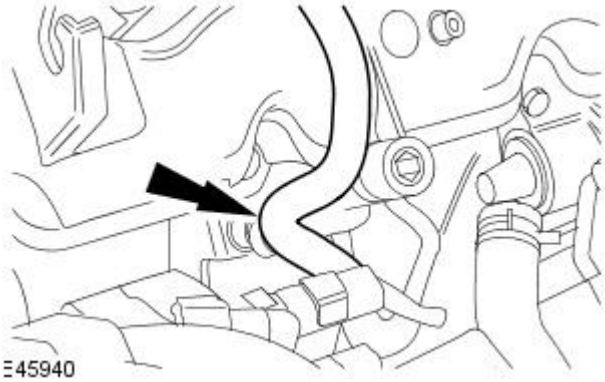

5. Remove the fuel pump to fuel injection supply manifold high pressure pipe retaining bracket.

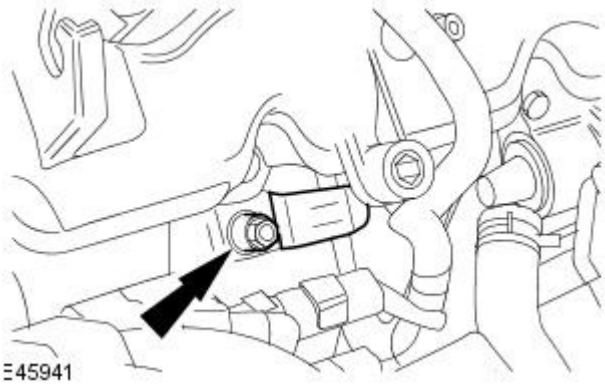

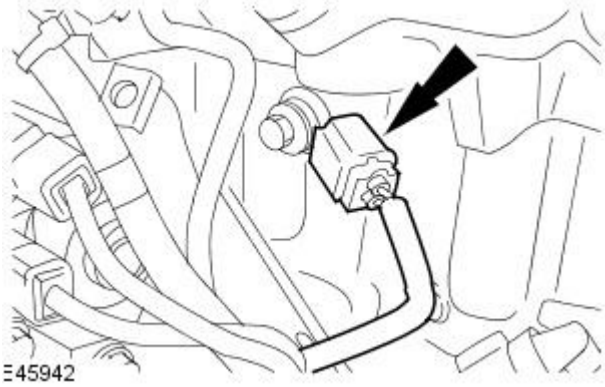

6. Disconnect the electrical connector.

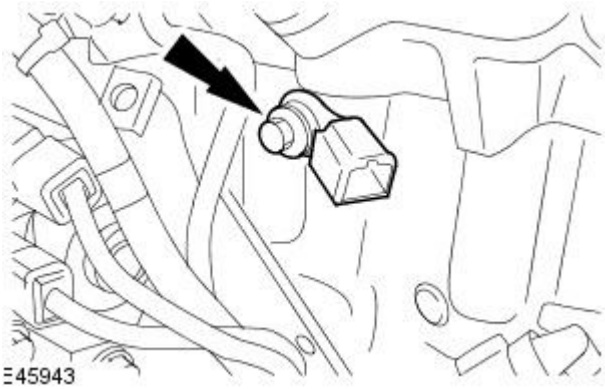

7. Remove the knock sensor (KS).

Installation

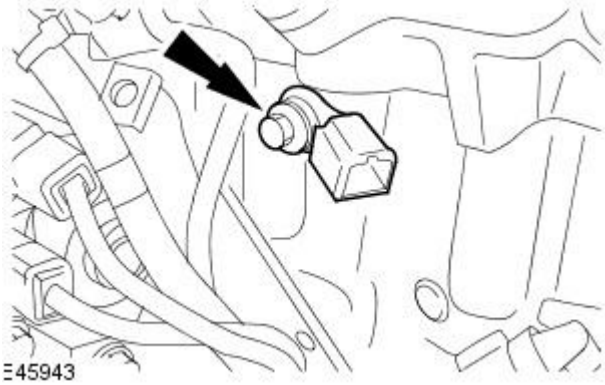

1. To install, reverse the removal procedure.

- Tighten to 20 Nm.

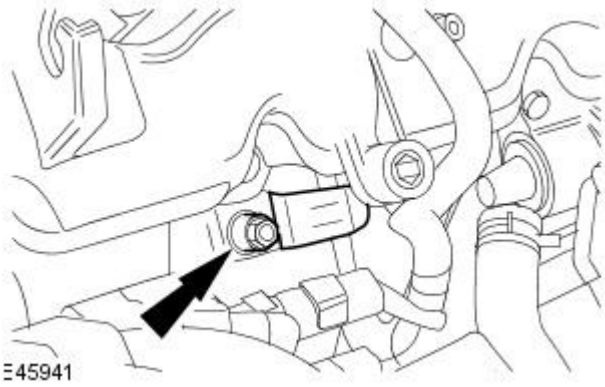

2. Tighten to 10 Nm.

Electronic Engine Controls - 2.0L Duratorq-TDCi / 2.2L Duratorq-TDCi (110kW / 150PS) - Puma - Manifold Absolute Pressure and Temperature (MAPT) Sensor

Removal and Installation

Removal

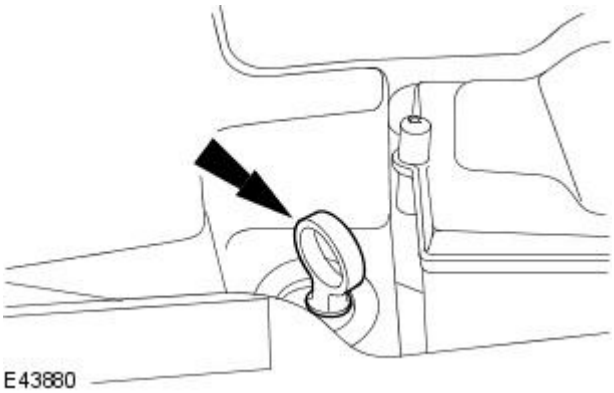

1. Remove the oil level indicator.

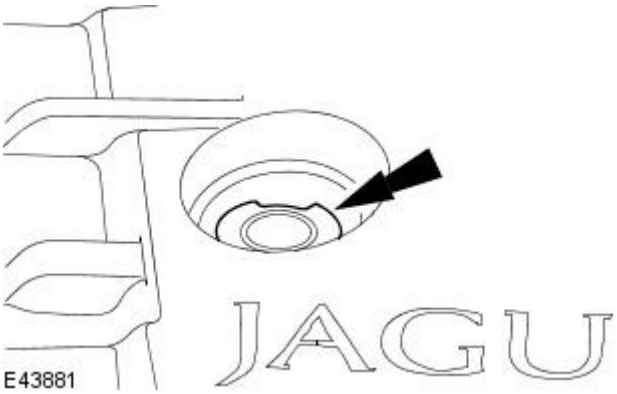

2. Remove the oil filler cap.

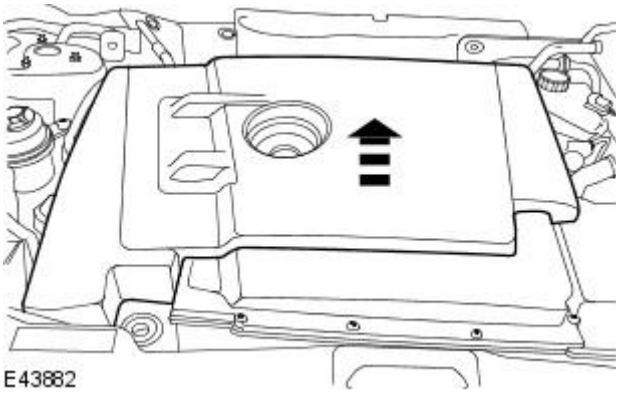

3. Remove the engine cover.

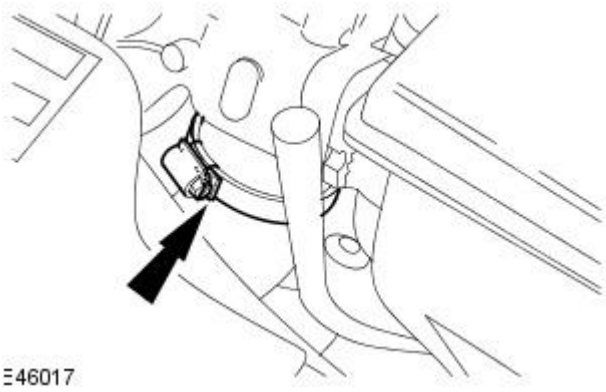

4. Detach the charge air cooler hose.

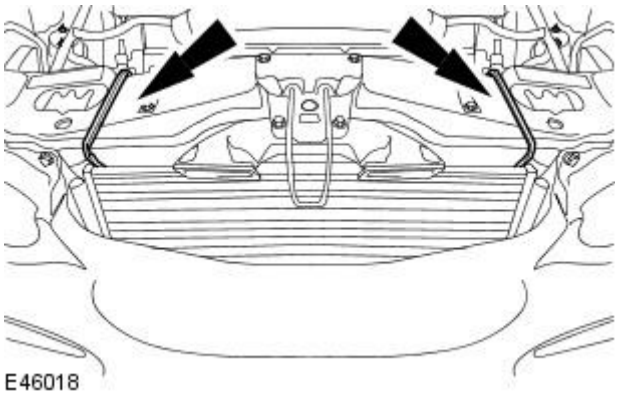

5. CAUTION: Make sure that the radiator is not damaged when installing the retaining straps.

Fit suitable retaining straps to the radiator.

6. Raise and support the vehicle.
For additional information, refer to: Jacking (100-02 Jacking and Lifting, Description and Operation).

7. Remove the radiator splash shield.
For additional information, refer to: Radiator Splash Shield (501-02 Front End Body Panels, Removal and Installation).

8. Detach the charge air cooler hose.

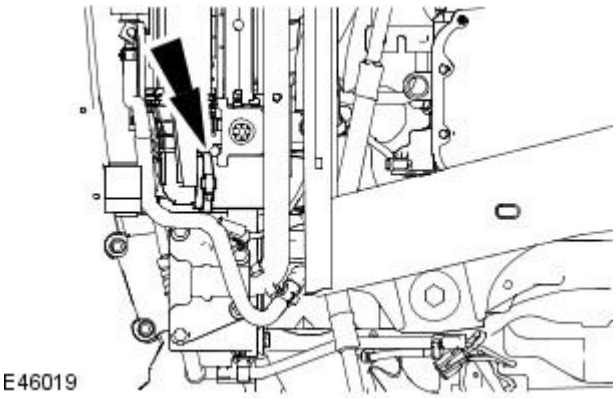

9. Remove the radiator support bar.

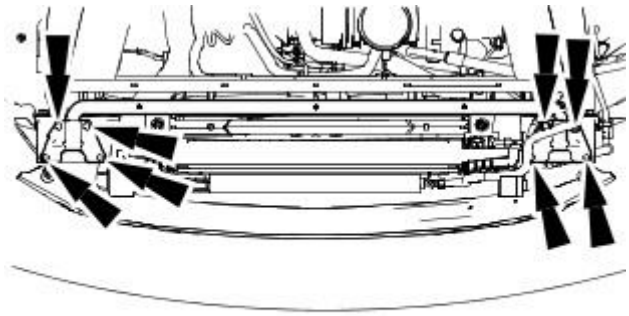

10. Disconnect the electrical connector.

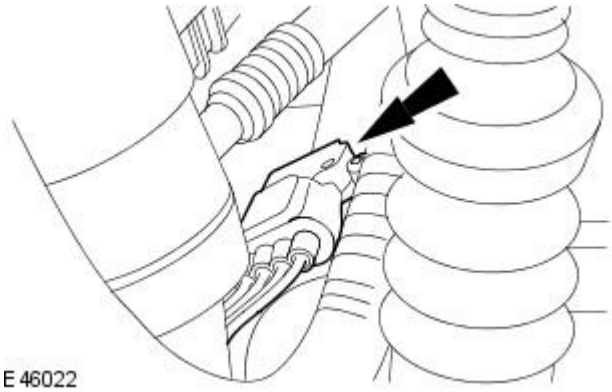

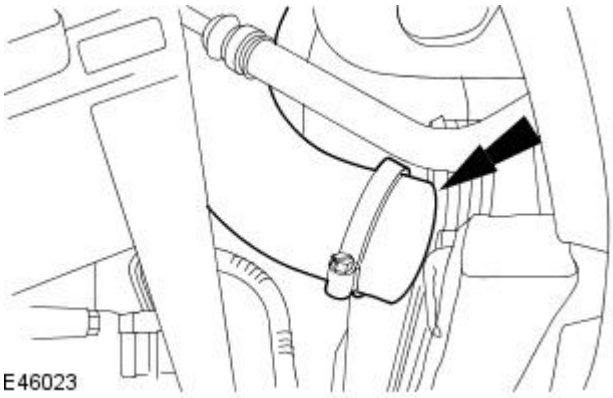

E46023

11. Remove the charge air cooler hoses and manifold absolute pressure and temperature (MAPT) sensor assembly.

12. Remove the MAPT sensor.

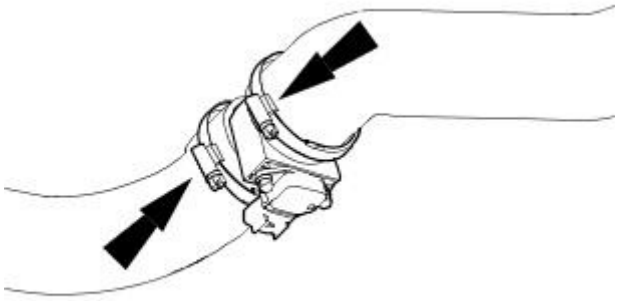

E46024

Installation

1. To install, reverse the removal procedure.

- Tighten to 4 Nm.

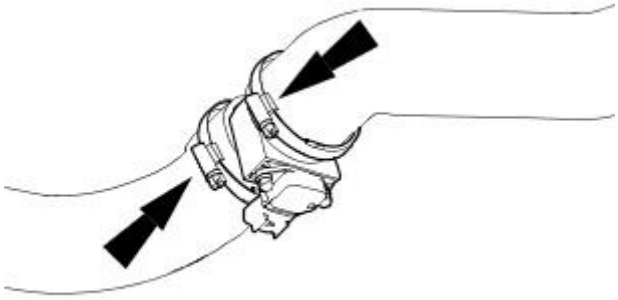

E46024

2. Tighten to 25 Nm.

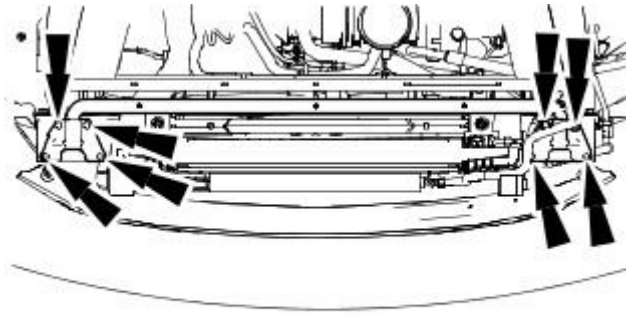

E46021

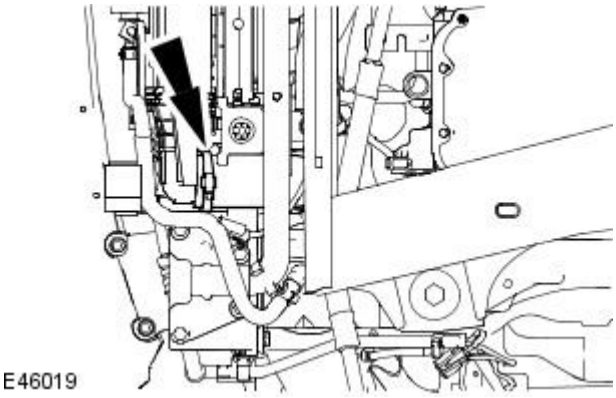

3. Tighten to 4 Nm.

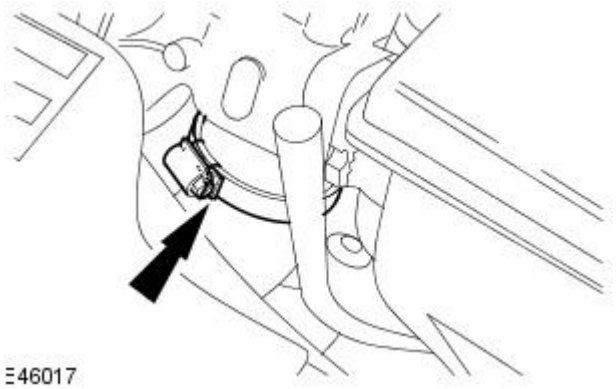

4. Tighten to 4 Nm.

Electronic Engine Controls - 2.0L Duratorq-TDCi / 2.2L Duratorq-TDCi (110kW / 150PS) - Puma - Manifold Absolute Pressure (MAP) Sensor

Removal and Installation

Removal

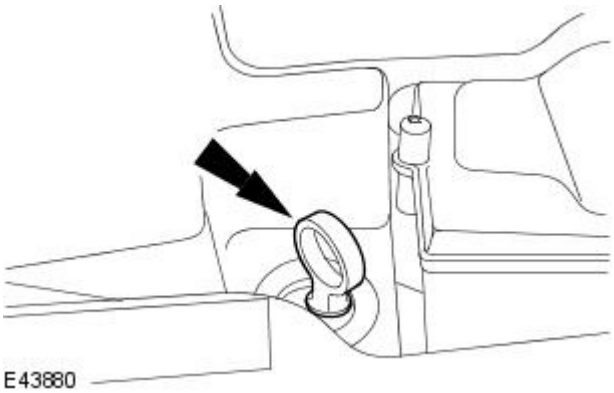

1. Remove the oil level indicator.

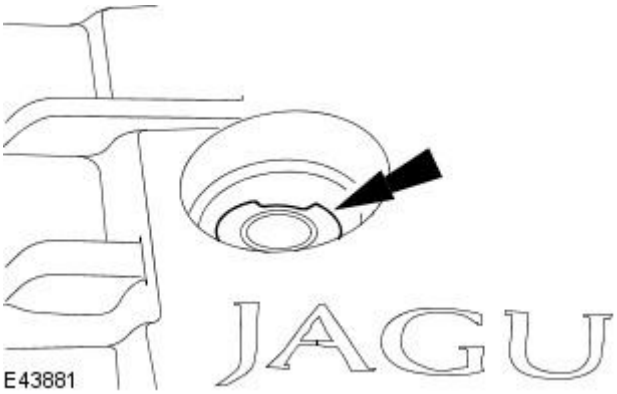

2. Remove the oil filler cap.

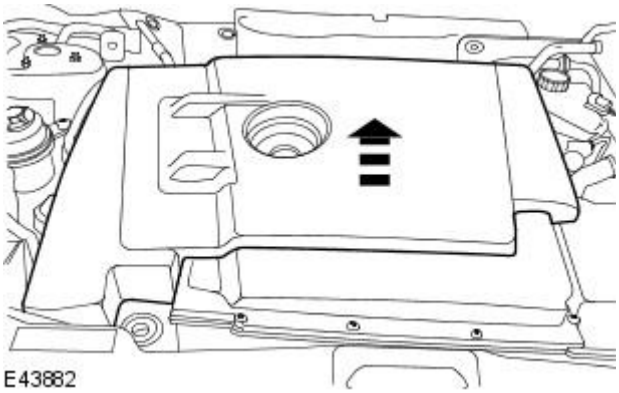

3. NOTE: Install the oil filler cap and oil level indicator to prevent foreign material entering the valve cover.

Remove the engine cover.

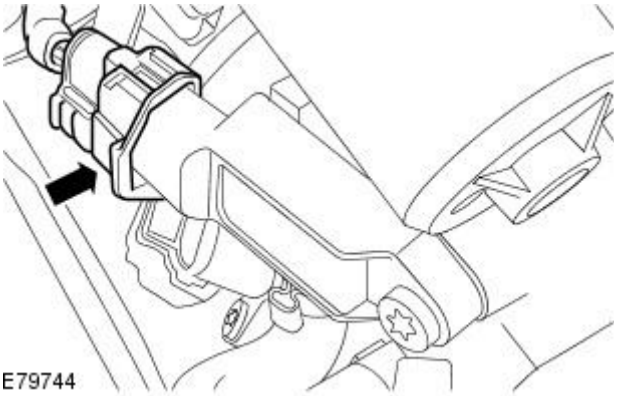

4. Disconnect the manifold absolute pressure (MAP) Sensor electrical connector.

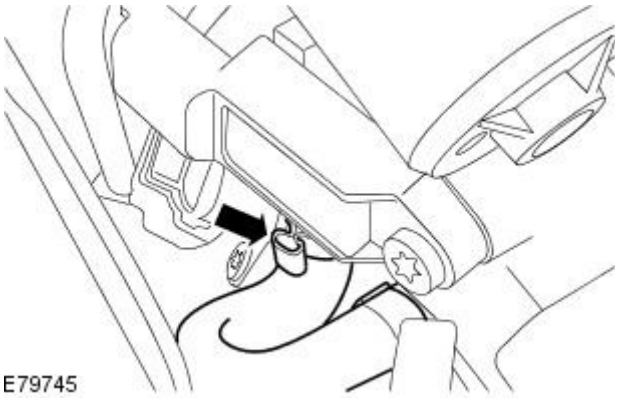

5. Disconnect the hose.

- Detach the retaining clip.

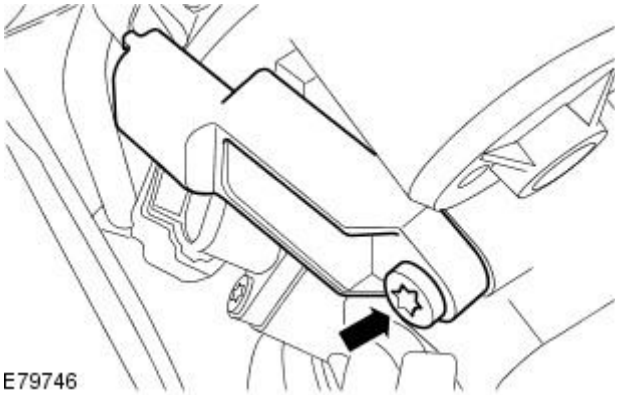

6. Remove the MAP sensor.

- Remove the retaining bolt.

Installation

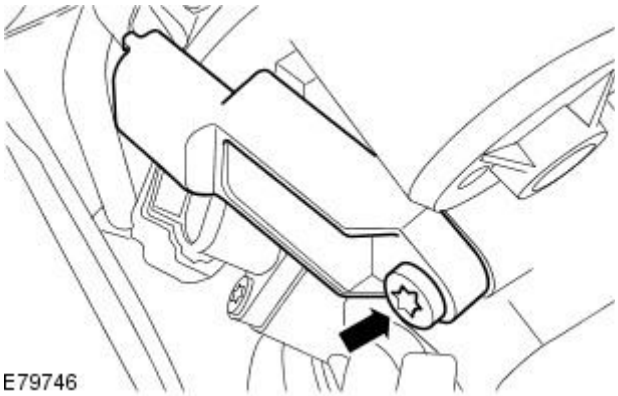

1. To install, reverse the removal procedure.

- Tighten to 4 Nm.

Electronic Engine Controls - 2.0L Duratorq-TDCi / 2.2L Duratorq-TDCi (110kW / 150PS) - Puma - Mass Air Flow (MAF) Sensor

Removal and Installation

Removal

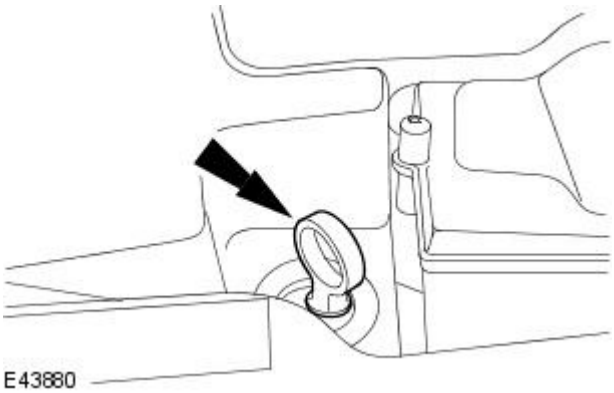

1. Remove the oil level indicator.

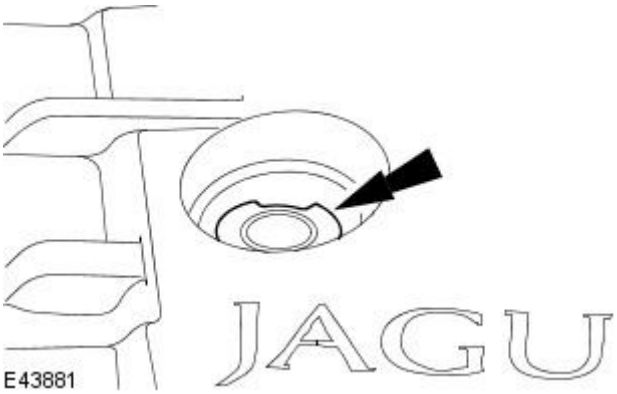

2. Remove the oil filler cap.

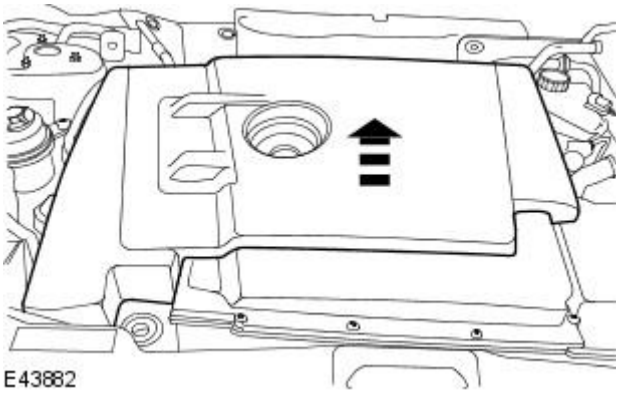

3. Remove the engine cover.

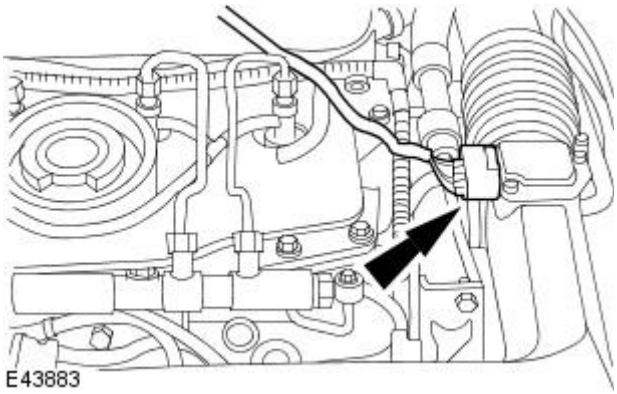

4. Disconnect the mass air flow sensor electrical connector.

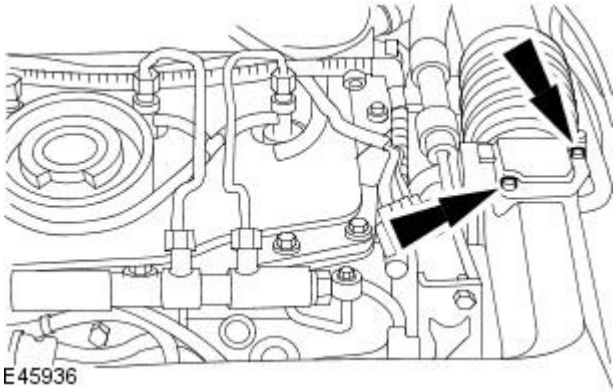

5. Remove the mass air flow (MAF) sensor.

Installation

1. To install, reverse the removal procedure.

Automatic Transmission / Transaxle - Vehicles With: 5-Speed Automatic Transaxle - JATCO -

Lubricant, Sealers and Solvents

Description	Specification
High-temperature grease	ESD-M1C220-A
Metal surface cleaner	WSW-M5B392-A
Sealant	WSS-M4G323-A6

Fluid Maintenance

CAUTION: Use only WSS-M2C922-A1 automatic transmission fluid. Use of any other fluids may result in a transmission malfunction or failure.

Intervals	
Normal Maintenance	Not necessary. Filled for life.
Severe Duty Maintenance	Change the fluid at 48,000 km (30,000 miles) intervals.

General Specifications

Engine	Approximate Liters	Refill Capacity [1] U.S. Quarts	Fluid Type
2.0l, 2.5L and 3.0L	8.8	8.32	WSS-M2C9 22-A1

1 Approximate dry capacity, includes cooler and tubes. Check the level at normal operating temperature. DO NOT OVERFILL. If it is necessary to add or change fluid, use only fluid which has been certified by the supplier as meeting the Jaguar Cars Ltd specification shown.

Description	Nm	lb-ft	lb-in
Main control valve body screws	8	-	71
Torque converter access cover retaining bolts	10	-	89
Torque converter retaining bolts	55	41	-
Transaxle retaining bolts	48	35	-
Transaxle dust cover retaining bolt	10	-	89
Solenoid retaining bolt	8	-	71
Transaxle support insulator retaining nut	133	98	-
Transaxle mount bracket retaining bolts	80	59	-
Transmission control module retaining nuts	10	-	89
Transmission fluid drain plug	45	33	-
Transmission fluid level plug	15	11	-
Transmission mount to body retaining bolts	80	59	-
Transmission range sensor retaining bolts	10	-	89
Valve body cover retaining bolts	8	-	71
Starter motor retaining bolts	35	26	-
Starter motor solenoid electrical connector retaining nut	6	-	53
Starter motor electrical connector retaining nut	12	9	-
Wiring harness to camshaft cover retaining stud, retaining nut	6	-	53
Intake manifold support bracket retaining bolts	10	-	89
Air cleaner mount bracket retaining nuts and bolt	6	-	53
Left-hand driveshaft retaining nuts - vehicles with 2.0L and 2.0L diesel engine	25	18	-
Shock absorber and spring assembly securing nuts	25	18	-
Transaxle ground lead	25	18	-
Support bar retaining bolts	25	18	-

Automatic Transmission / Transaxle - Vehicles With: 5-Speed Automatic Transaxle - JATCO - Transmission DescriptionVehicles With: 5-Speed Automatic Transaxle - JATCO

Description and Operation

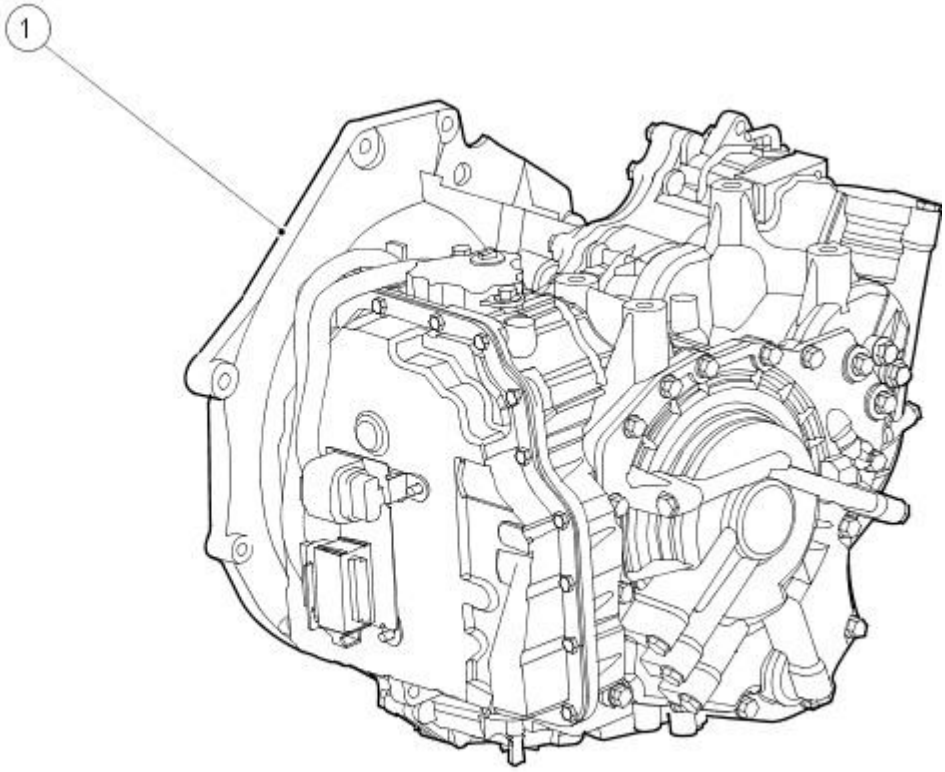

VUJ0004671

Automatic transmission JF506E - Up To 2009MY

The newly developed JF506E automatic transmission has been developed for use by Jaguar. The JF506E is built in Japan by JATCO (Japan Automatic Transmission Company). The JF506E has 5-speed lock-up which provides smooth and fast operation and employs a Transmission Control Module (TCM), three speed sensors and nine gear change solenoids to realize finer gear change control which provides excellent response to changing driving conditions.

Automatic transmission JF506E

JF506E:

- J = Japan automatic transmission company
- F = front wheel drive
- 5 = 5 Forward gears
- 06 = Version number
- E = Electronic control

The transmission ID is stamped on the transmission, E.G.: PL002 = 2.0 litre, PL 001 = 2.5 litre and PL 000 = 3.0 litre. This is followed by the production year and month and a 5 digit serial number – 08 XXXXX.

Range Selection

Depending on the vehicle options selected the automatic transmission range selector may have different range positions.

The standard range selector has seven positions: P, R, N, D, 4, 3 and 2.

J-Gate Range Selection

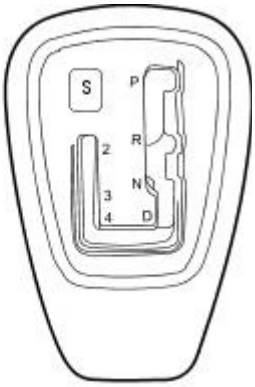

VUJ0004672

"P"

In the PARK position:

- there is no power flow through the automatic transmission.
- the parking pawl locks the output shaft to the case.
- the engine may be started.
- the ignition key may be removed.

"R"

In the REVERSE position:

- the vehicle may be operated in a rearward direction, at a reduced gear ratio.
- backup lamps are illuminated.

"N"

In the NEUTRAL position:

- there is no power flow through the automatic transmission.
- the output shaft is not held and is free to turn.
- the engine may be started.

"D"

Drive is the normal position for most forward driving.

The D position provides:

- automatic shift 1-5 and 5-1.
- apply and release of the torque converter clutch.
- maximum fuel economy during normal operation.
- engine braking in 5th gear.

"4"

The 4 position provides:

- automatic shift 1-4 and 4-1.
- apply and release of the torque converter clutch.
- engine braking in 4th gear.

"3"

The 3 position provides:

- third gear start and hold.
- the torque converter clutch may apply and release.
- improved traction on slippery roads.
- engine braking.

"2"

The 2 position provides:

- second gear start and hold.
- the torque converter clutch may apply and release.
- improved traction on slippery roads.
- engine braking.

"S"

The Sport mode switch allows:

- the driver to select or de-select the automatic transmission sport mode.
- the automatic transmission to operate normally when the sport mode is selected, but under acceleration the gear shift points are extended to make full use of the engine's power reserves.
- the driver to drive the vehicle in the "D" position with full automatic transmission shift or manually shift gears in the "2, 3 and 4" positions.

Disassembled Views

Transmission disassembled Views

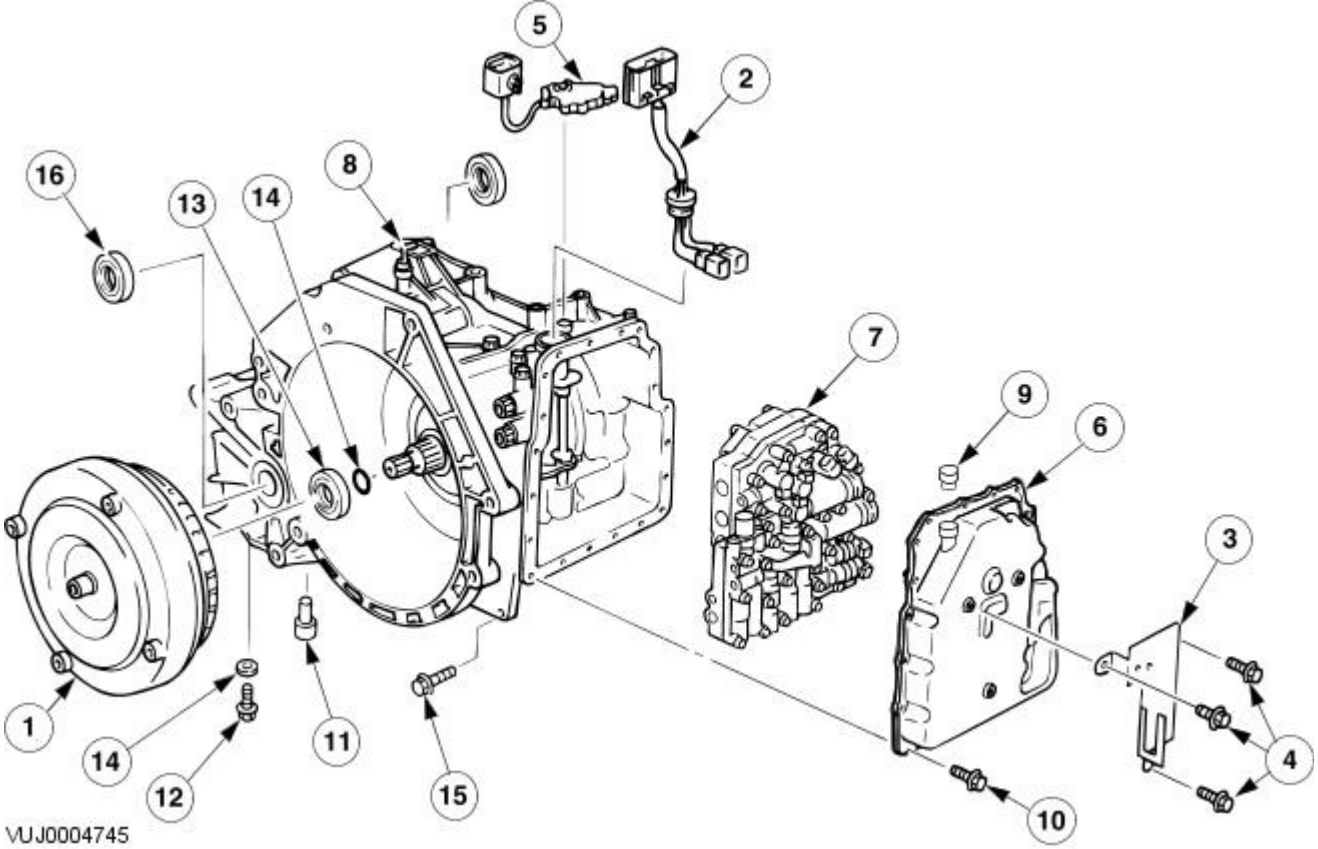

Item	Part Number	Description
1	—	Torque converter
2	—	Terminal assembly
3	—	Plate
4	—	Retaining bolt
5	—	Inhibitor switch
6	—	Main control valve body cover
7	—	Main control valve body
8	—	Air breather
9	—	Automatic transmission fluid charging pipe cap.
10	—	Main control valve body cover retaining bolt
11	—	Automatic transmission fluid level tube
12	—	Magnet plug
13	—	Oil seal
14	—	O-ring
15	—	Transmission retaining bolts
16	—	Differential oil seal

Transmission disassembled Views (continued)

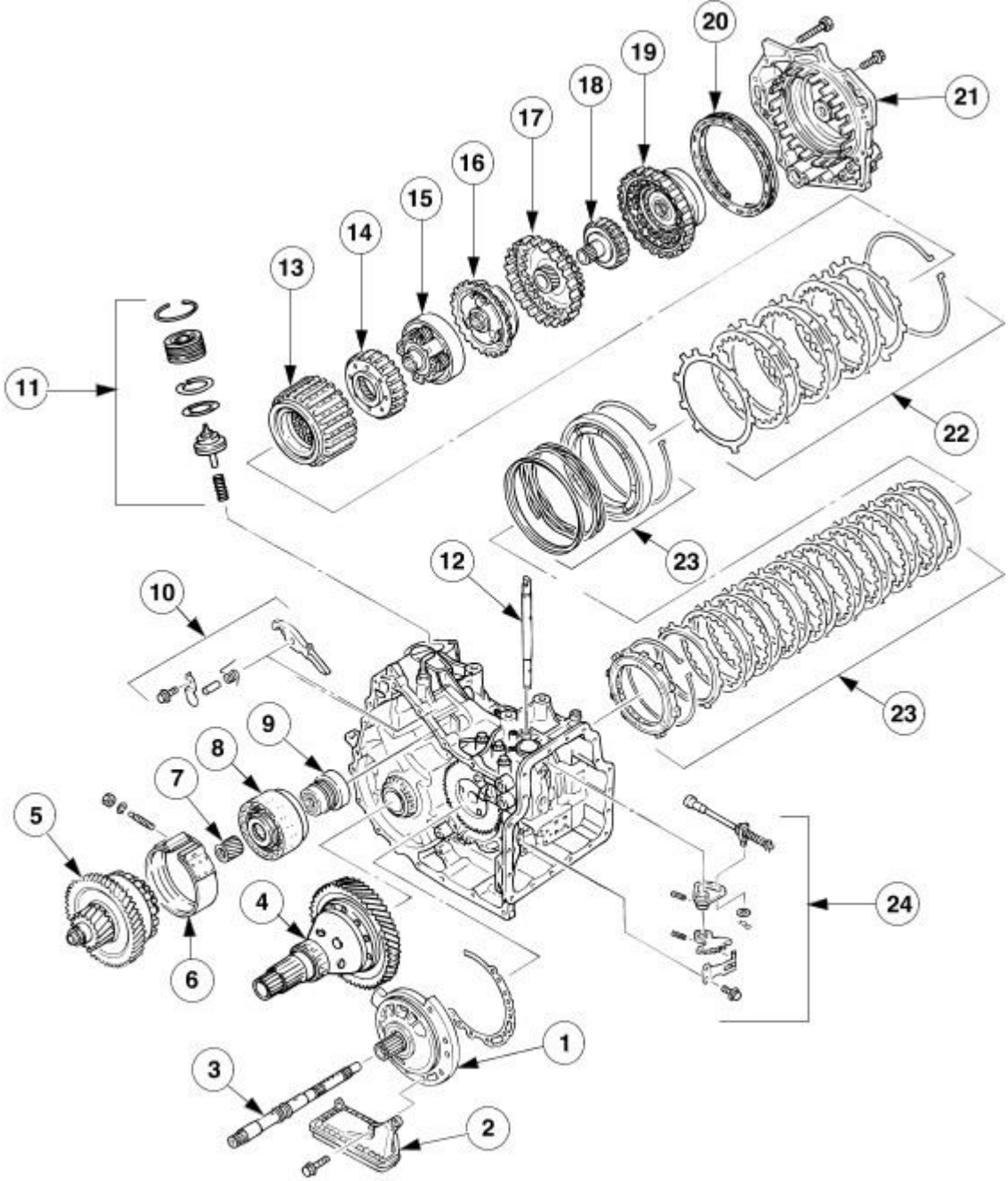

VUJ0004746

Item	Part Number	Description
1	—	Oil pump
2	—	Oil strainer
3	—	Input shaft
4	—	Differential gear
5	—	Reduction gear
6	—	Reduction brake band
7	—	Sun gear
8	—	Direct clutch
9	—	One-way clutch inner race
10	—	Parking mechanism
11	—	Band servo
12	—	Manual shaft
13	—	Low clutch
14	—	Internal gear
15	—	Rear planetary carrier
16	—	Front planetary carrier
17	—	Low clutch hub
18	—	High clutch hub
19	—	Reverse and high clutch assembly
20	—	Return spring
21	—	Side cover
22	—	2-4 brake
23	—	Low and reverse brake
24	—	Parking component

Overview

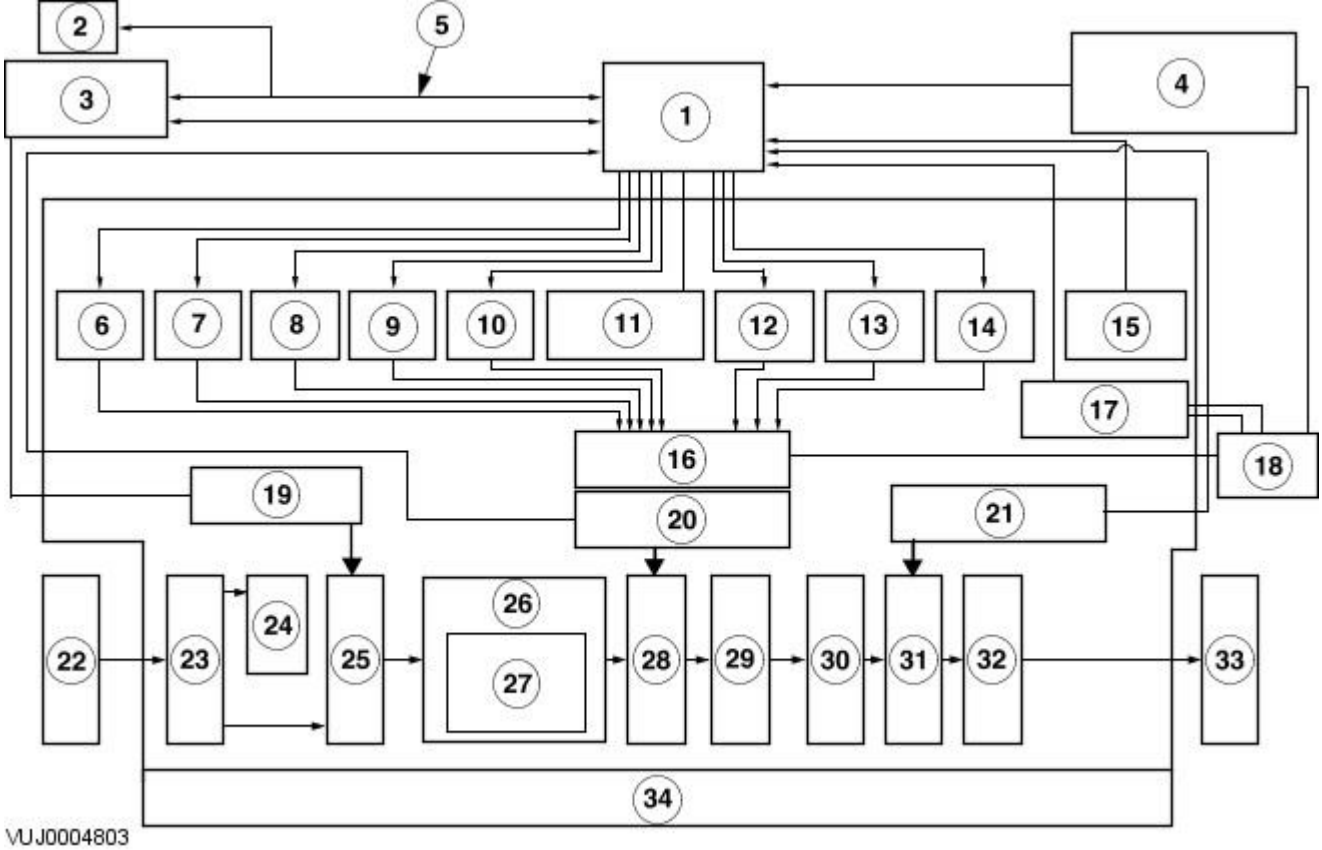

Item	Part Number	Description
1	—	TCM
2	—	Anti-lock Braking System (ABS)
3	—	Engine Control Module (ECM)
4	—	D/4 switch, (test switch), sports mode switch
5	—	CAN (including torque down switch)
6	—	Line pressure solenoid
7	—	Lock-up solenoid
8	—	Shift solenoid A
9	—	Shift solenoid B
10	—	Shift solenoid C
11	—	Low clutch timing solenoid
12	—	Reduction timing solenoid
13	—	2-4 brake timing solenoid
14	—	2-4 brake duty solenoid
15	—	Transmission Fluid Temperature (TFT) sensor
16	—	Control valve
17	—	Inhibitor switch
18	—	Select lever
19	—	Turbine Shaft Speed (TSS) sensor
20	—	Intermediate Shaft Speed (ISS) sensor
21	—	Vehicle Speed (VSS) sensor
22	—	Engine
23	—	Torque converter
24	—	Fluid pump
25	—	Input shaft
26	—	Four-speed geartrain
27	—	Clutch, brake, planetary gear etc
28	—	Output gear
29	—	Idler gear
30	—	Reduction geartrain
31	—	Parking gear
32	—	Final gear and differential
33	—	Transfer case
34	—	Automatic transmission assembly

The transmission gear changes, oil pressure and lock-up operation are all electronically controlled. The TCM located in the left hand A-pillar receives electrical signals from sensors indicating vehicle speed and throttle opening. In response to these signals the TCM selects the appropriate gear and regulates other related conditions.

Actual transmission control changes are made by actuators (solenoids) that respond to input signals received from the TCM. These solenoids operate in response to electrical signals they regulate the control valve operation. The control valves cause changes in the fluid flow passages. This results in pressure changes within the transmission.

Transmission Construction

A cross-sectional view of the automatic transmission.

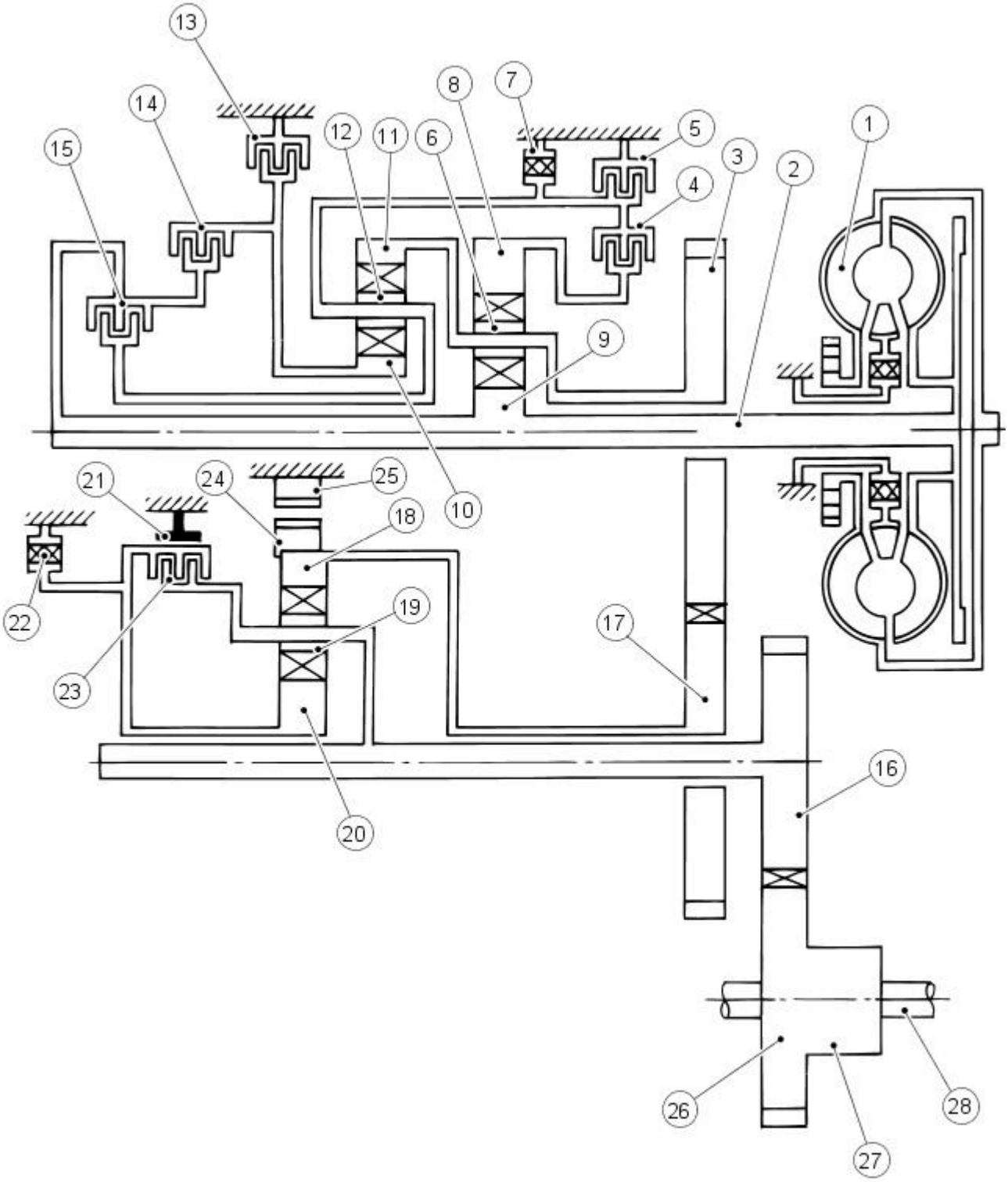

VUJ0004751

Item	Part Number	Description
1	—	Torque converter
2	—	Input shaft
3	—	Output gear
4	—	Low clutch
5	—	Low and reverse brake
6	—	Rear planetary pinion gear
7	—	Low one-way clutch
8	—	Rear internal gear
9	—	Rear sun gear
10	—	Front sun gear
11	—	Front internal gear
12	—	Front planetary pinion gear
13	—	2-4 brake
14	—	Reverse clutch
15	—	High clutch
16	—	Reduction gear
17	—	Idler gear
18	—	Reduction internal gear
19	—	Reduction planetary pinion gear
20	—	Reduction sun gear
21	—	Reduction brake band
22	—	Reduction one-way clutch

23	—	Direct clutch
24	—	Parking gear
25	—	Parking pawl
26	—	Final gear
27	—	Differential gear
28	—	Driveshaft

Torque Converter

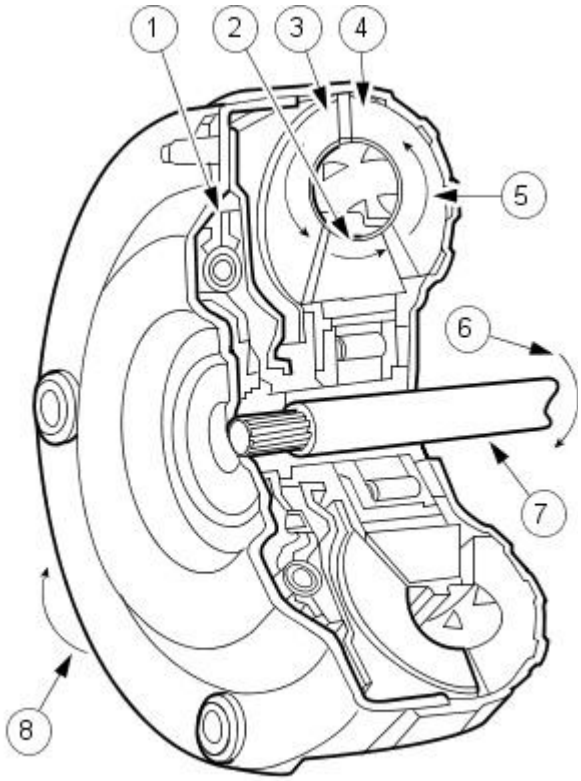

VUJ0004819

Item	Part Number	Description
1	—	Converter clutch and damper
2	—	Reactor
3	—	Turbine damper
4	—	Impeller
5	—	Fluid motion
6	—	Transmission input rotation
7	—	Input shaft
8	—	Engine rotation

Torque Converter

The torque converter delivers the engine drive power to the transmission. When the lock-up clutch is released, the power delivery is depended on automatic transmission fluid (ATF). When the lock-up clutch is engaged the engine power is delivered to the transmission through the lock-up clutch.

The lock-up clutch is controlled electronically and operates in 4th and 5th gears.

A symmetrical element 1-step 2-phase torque converter is used with JF506E automatic transmission. The term "1-step" refers to the single turbine and runner assembly and "2-step" refers to the turbine runner speed relative to the pump impeller speed. When the turbine runner speed is lower than the pump impeller speed, the mechanism operates as a simple torque converter. When the turbine runner speed is higher than pump impeller speed, the mechanism acts as a fluid coupling.

The torque converter transmits and multiplies torque. The torque converter is a four-element device:

- impeller assembly
- turbine and damper assembly
- reactor assembly
- clutch

The standard torque converter components operate as follows:

- Rotation of the converter housing and impeller set the fluid in motion.
- The turbine reacts to the fluid motion from the impeller, transferring rotation to the geartrain through the input shaft.
- The reactor redirects fluid going back into the impeller, allowing for torque multiplication.
- The clutch and damper assembly dampens powertrain torsional vibration and provides a direct mechanical connection for improved efficiency.
- Power is transmitted from the torque converter to the planetary gearsets and other components through the input shaft.

Oil Pump

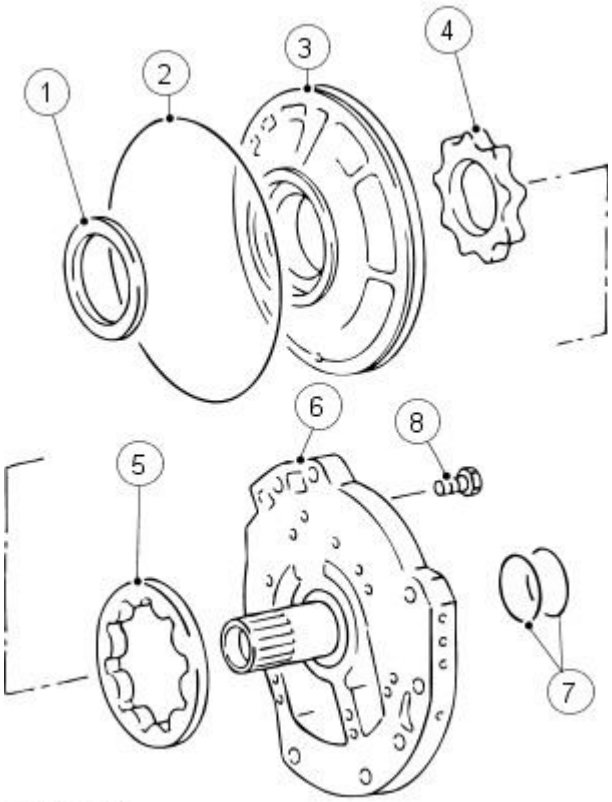

VUJ0004765

Item	Part Number	Description
1	—	Oil seal
2	—	O-ring
3	—	Oil pump housing
4	—	Inner rotor
5	—	Outer rotor
6	—	Oil pump cover
7	—	Seal ring
8	—	Bolts

A trochoid oil pump is used with JF506E automatic transmission. The trochoid oil pump has the advantage of very low power loss.

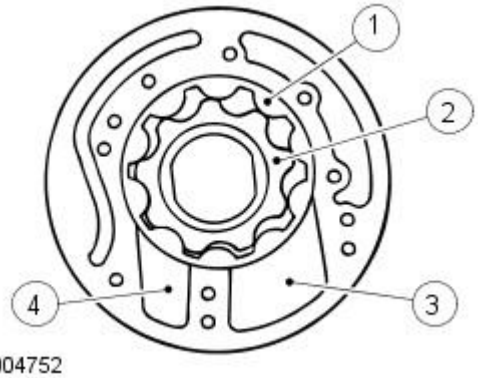

VUJ0004752

Item	Part Number	Description
1	—	Outer rotor
2	—	Inner rotor
3	—	Suction port
4	—	Discharge port

The oil pump is driven by the engine. The inner rotor connects to the torque converter sleeve.

Geartrain

Power is transmitted from the torque converter to the planetary gearsets through the input shaft. Bands and clutches are used to hold and drive certain combinations of gearsets. This results in five forward ratios and one reverse ratio, which are transmitted to the output shaft and differential.

Gear Ratio	
1st	3.801 to 1
2nd	2.131 to 1
3rd	1.364 to 1
4th	0.935 to 1
5th	0.685 to 1
Reverse	2.970 to 1

Planetary Gears

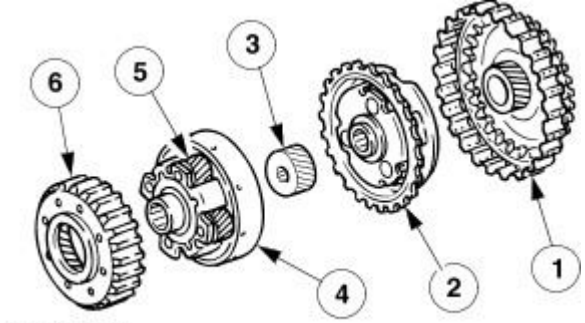

VUJ0004754

Item	Part Number	Description
1	—	Front sun gear
2	—	Front pinion gear
3	—	Rear sun gear
4	—	Front internal gear
5	—	Rear pinion gear
6	—	Rear internal gear

There are 3 planetary gear sets. Front, rear and reduction.

Clutches

There are 4 wet type multi disc clutches (low clutch, high clutch, reverse clutch and direct clutch).

Each clutch has two primary rotating parts (the clutch drum and the clutch hub). Power transmission is effected and controlled by these two parts.

The clutch drum and hub are connected to a clutch plate. Pressure applied to the clutch plate results in power transfer. When this pressure is released from the clutch plate, power does not transfer.

The clutch plates at the clutch drum side function as the driven plates. The clutch plates at the clutch hub side function as the drive plates. The drive plates have friction materials on the faces.

Clutch engagement occurs when oil pressure is applied to the piston in the clutch drum. The dish plate acts as a cushion to prevent sudden and violent force applied to the clutch plates which may causes a rough clutch engagement.

The retaining plate is attached to the driven plate. The retaining plate also serves as a spacer when the clutch is disengaged. It ensures specified clutch clearance.

The piston is returned by return spring forces to ordinal position when the oil pressure is removed through the drain hole. As a result the clutch is disengaged.

The check ball is forced to seal the oil circuit by oil pressure against the oil input hole when the clutch is engaged. When the clutch is released the check ball moves back from the input hole to open the circuit and air is led into the oil chamber. This prevents residual oil pressure build-up in the clutch drum.

The clutch drum and the clutch hub are connected to the planetary gears respectively. Planetary gear rotation acts as the controlling element of the clutch.

Cancel Force Cover

Low Clutch

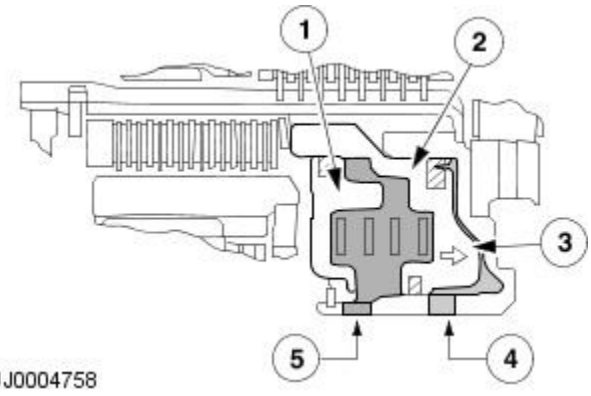

VUJ0004758

Item	Part Number	Description
1	—	Cancel force cover
2	—	Low clutch piston
3	—	Cancel force
4	—	Low clutch pressure
5	—	Lubricating pressure

High Clutch

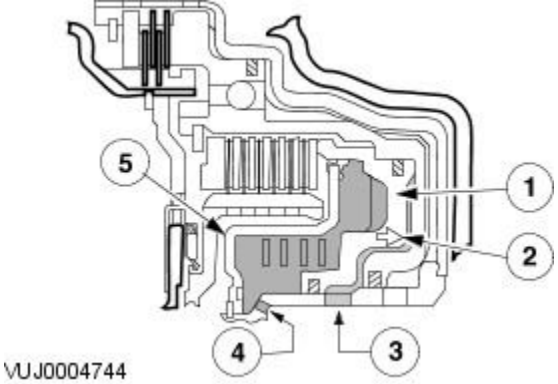

Item	Part Number	Description
1	—	High clutch piston
2	—	Cancel force
3	—	High clutch pressure
4	—	Lubricating pressure
5	—	Cancel force cover

The JF506E automatic transmission is equipped with the centrifugal oil pressure cancel room in low clutch and high clutch.

The centrifugal oil pressure cancel room improves clutch release time by applying force to the low clutch and the high clutch.

This system improves operating performance of the piston compared with the check ball system.

The piston returns to the original position by centrifugal force that is kept at the pressure room located at the other side of the piston cylinder.

Therefore, the response of the clutch release operation is improved and quick gear change is obtained.

Low and Reverse Brake, 2-4 Brake

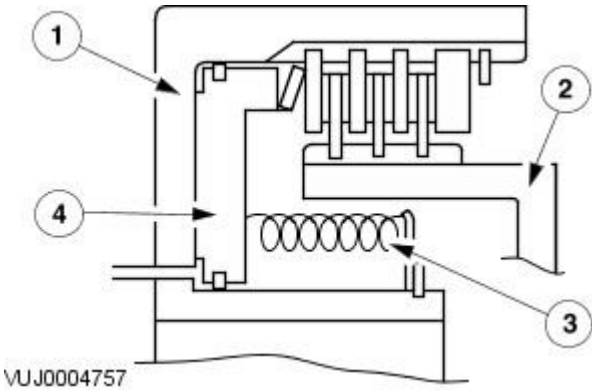

Item	Part Number	Description
1	—	Transmission case
2	—	Brake hub
3	—	Return spring
4	—	Piston

The low & reverse brake and the 2-4 brake are multi-disc type brakes. Basic brake operation is similar to the clutch. The clutch drum is mounted to an appropriate position on the transmission case. The low & reverse brake and the 2-4 brake act to stop the clutch hub rotation when the clutch plate is engaged.

Reduction Brake Band and Band Servo

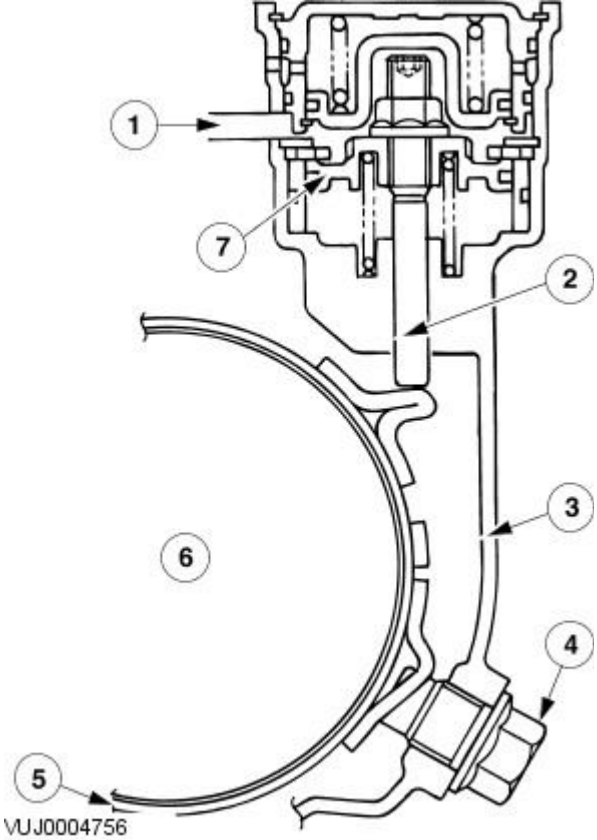

Item	Part Number	Description
1	—	Brake band engagement pressure
2	—	Piston stem
3	—	Transmission case
4	—	Anchor end bolt
5	—	Brake band
6	—	Direct clutch drum
7	—	Brake piston

The brake band acts in response to the servo to stop the direct clutch drum rotation.

The servo has a piston that operates in response to changes in oil pressure. The piston expands in P and N ranges, 1st, 2nd, 3rd, 4th, and reverse gears to stop the direct clutch drum rotation.

When the line pressure reaches to the band servo the servo piston works. The downward piston stroke causes the piston stem to tighten the brake band. The direct clutch drum rotation stops.

The anchor end bolt is used to maintain appropriate clearance between the brake band and the direct clutch drum when the brake band is released. This clearance can be adjusted with the adjusting nut on the anchor end bolt.

One Way Clutches

The transmission uses two one way clutches.

Low One Way Clutch

The front planetary carrier is fixed by the inner race which runs free during 1st gear operation.

Reduction One Way Clutch

The reduction sun gear is fixed by the inner race which runs free during 1st, 2nd, 3rd and 4th gear operations.

Roller-Type One-Way Clutch

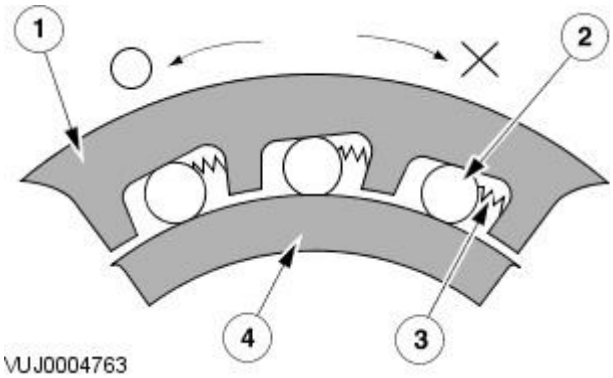

Item	Part Number	Description
1	—	Outer race
2	—	Roller
3	—	Spring
4	—	Inner race

Normally, rollers are energized to the narrower section via a spring. Therefore, in the direction where the rollers are engaged between the

cam and inner race they are united to transmit torque. In the reverse direction, because the rollers move in the direction where the clearance is larger, clearances occur between races and the inner and outer races can rotate to each other.

Sprag-Type One-Way Clutch

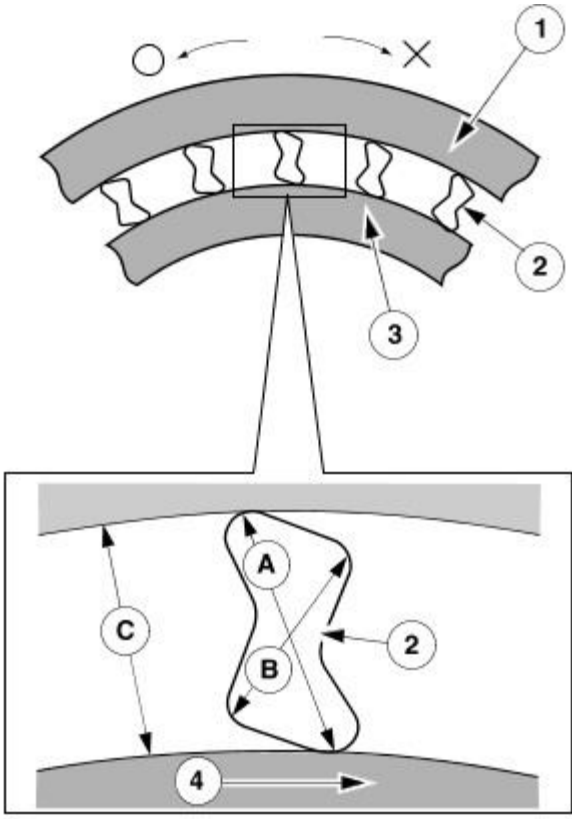

VUJ0004764

Item	Part Number	Description
1	—	Outer race
2	—	Sprag
3	—	Inner race
4	—	Rotation direction

Note the difference between sprag diameters "A" and "B" If the inner race tries to turn toward the left, radius "B" (longer than gap "C") firmly locks the sprag to prevent the sprag from moving to the left.

Solenoids

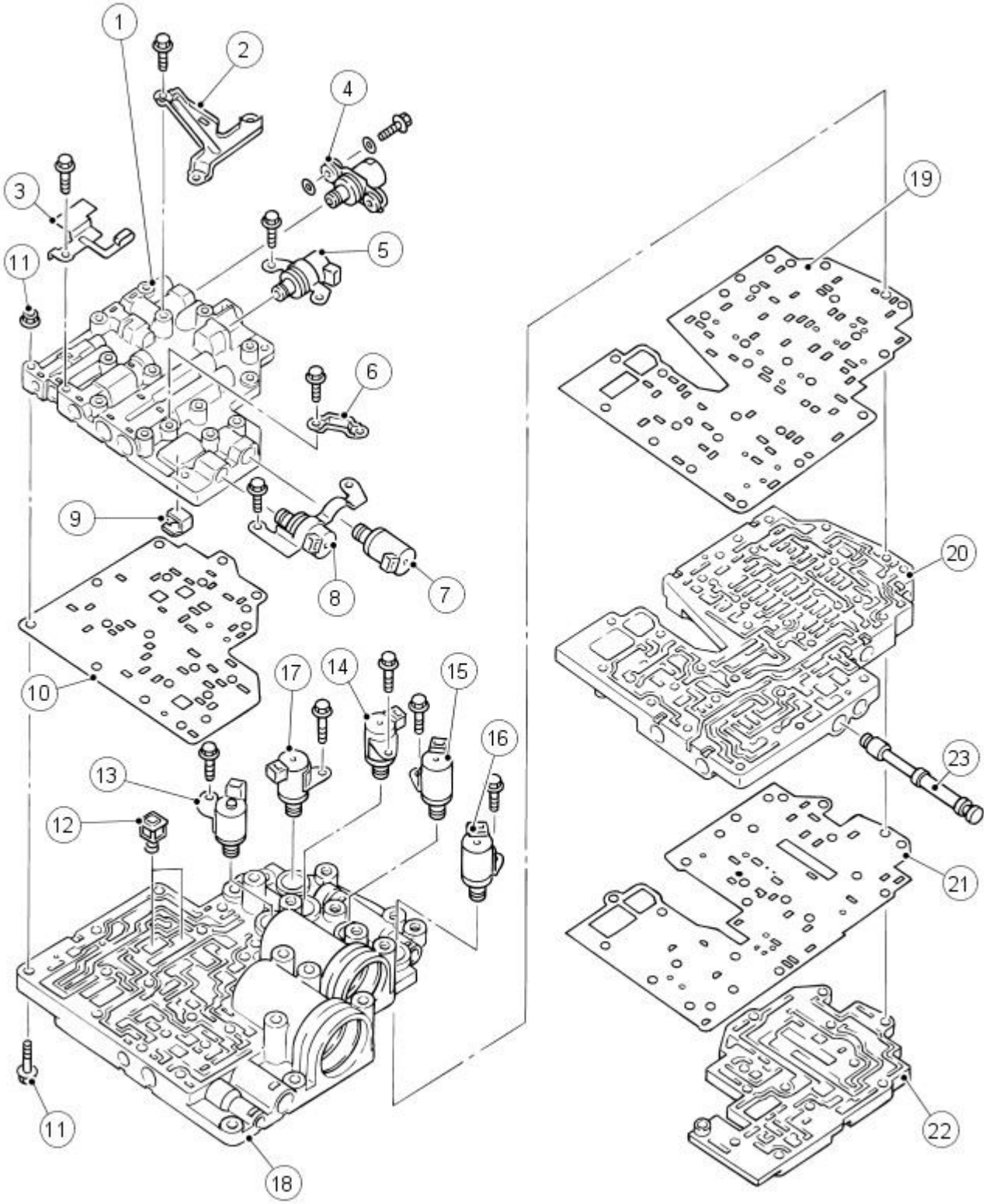

VUJ0004747

Item	Part Number	Description
1	—	Sub lower body
2	—	Bracket
3	—	Clip
4	—	Line pressure duty solenoid
5	—	Low clutch timing solenoid
6	—	Bracket
7	—	2-4 brake duty timing solenoid
8	—	2-4 brake timing solenoid
9	—	Pilot filter
10	—	Separate plate A
11	—	Locating bolt
12	—	Filter
13	—	Lock-up solenoid
14	—	Reduction timing solenoid
15	—	Shift solenoid B
16	—	Shift solenoid C
17	—	Shift solenoid A
18	—	Lower body
19	—	Separate plate B
20	—	Internal body

21	—	Separate plate C
22	—	Upper body
23	—	Manual valve

There are 9 solenoids which can be classified as two types by the way in which they operate. Three of them are duty solenoids, the other six are on/off types. The solenoids are actuated by the TCM output signals.

On/Off Solenoids

Shift solenoids A, B, C, low clutch solenoid, reduction timing solenoid and the 2/4 brake timing solenoid

The on/off solenoids close the pressure circuit in response to current flow.

Each solenoid has a internal coil. Current passes through coil and actuates the needle valve. The needle valve then opens and closes the fluid pressure circuits.

Duty Solenoids

Line pressure solenoid, lock-up solenoid and the 2/4 brake duty solenoid.

The duty solenoids repeatedly turn on/off in 50Hz cycles, this opens and closes the fluid pressure circuits.

Sensors

Sensor Schematic

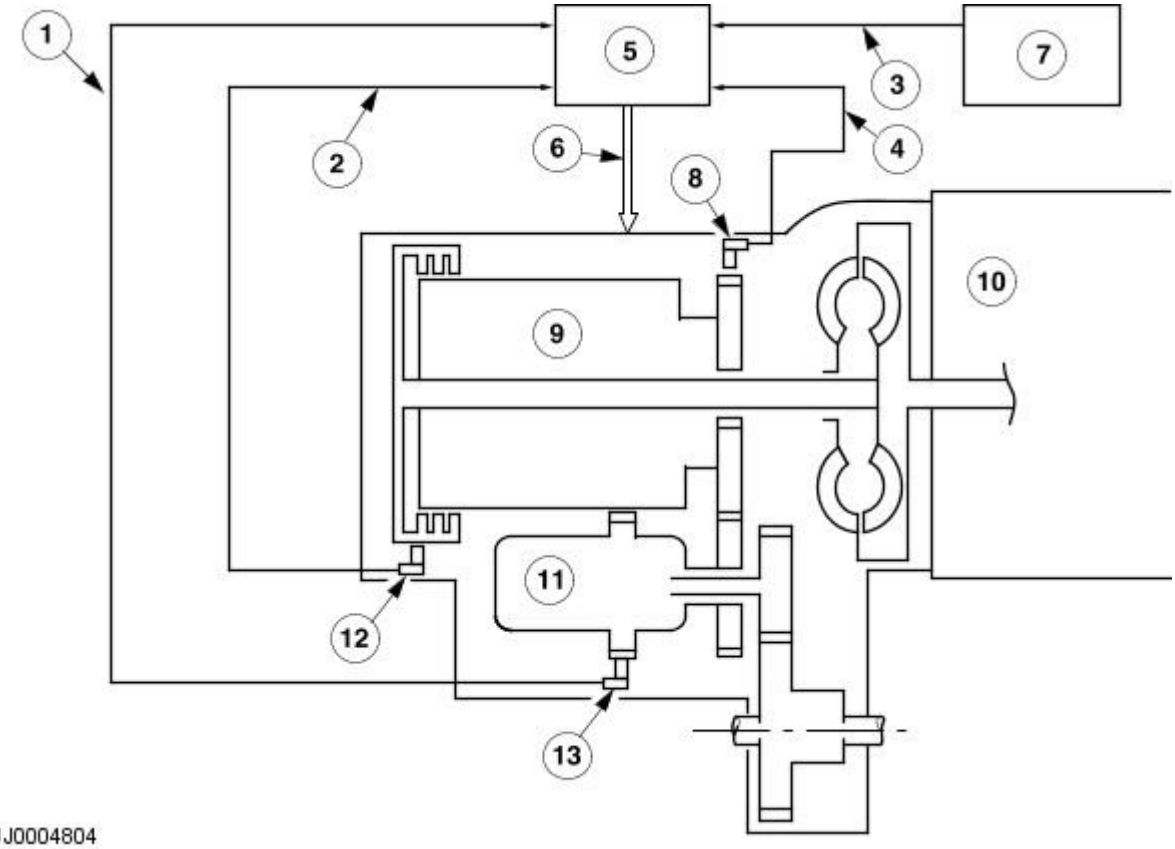

VUJ0004804

Item	Part Number	Description
1	—	Output shaft rotational speed sensor
2	—	Input shaft rotational speed sensor
3	—	Engine speed signal
4	—	Output gear rotational signal
5	—	TCM
6	—	Transmission control
7	—	Engine Control Module (ECM)
8	—	Intermediate sensor
9	—	Geartrain
10	—	Engine
11	—	Reduction geartrain
12	—	Turbine sensor
13	—	Vehicle Speed Sensor (VSS)

Transmission Fluid Temperature (TFT) Sensor

The TFT sensor is installed in the transmission case, it constantly monitors the fluid temperature resistance varies with fluid temperature.

Automatic transmission internal operational resistance varies with automatic transmission fluid temperature change. The TCM detects the automatic transmission fluid temperature according to the voltage produced by the TFT sensor.

Speed Sensors

There are 3 sensors installed in the transmission casing. They are all of the inductive type.

Turbine Shaft Speed Sensor

The Turbine Shaft Speed Sensor (TSS) detects the reverse clutch drum revolution speed. The reverse clutch drum is connected to the input shaft and rotates at the same speed. The TCM calculates the input shaft speed to determine the turbine speed.

The TSS uses a magnetic coil. As the input shaft rotates, the sensor detects a pulse signal according to the gear teeth on the outside of the reverse clutch drum and sends it to the TCM.

Vehicle Speed Sensor

The vehicle speed sensor (VSS) detects the parking gear rotation speed. The TCM calculates the vehicle speed based on the parking gear rotation speed.

The VSS uses a magnetic coil. As the parking gear rotates the sensor detects a pulse signal according to the gear teeth rotation speed and then sends it to the TCM.

Intermediate Shaft Speed Sensor

The Intermediate Shaft Speed Sensor (ISS) detects the output gear rotation speed which is calculated by the TCM.

The ISS uses a magnetic coil. As the output gear rotates the sensor detects a pulse signal according to the gear teeth rotation and sends it to the TCM.

Automatic Transmission / Transaxle - Vehicles With: 5-Speed Automatic Transaxle - JATCO - Diagnostic StrategyVehicles With: 5-Speed Automatic Transaxle - JATCO

Diagnosis and Testing

The complexity of the electronics involved with the automatic transmission/transaxle preclude the use of workshop general electrical test equipment. Therefore, reference should be made to the Jaguar approved diagnostic system for detailed instructions on testing the automatic transmission/transaxle.

Where a fault involving the automatic transmission/transaxle is indicated by the Jaguar approved diagnostic system, some basic diagnostic methods may be necessary to confirm that connections are good and that the wiring is not damaged, before installing new components.

1. **1.** Verify the customer concern by operating the vehicle. Refer to the automatic transmission diagnostic drive cycle in the DTC summary section.
2. **2.** Check the fluid levels and condition of the fluid.
3. **3.** Check for non-factory fitted items.
4. **4.** Check the shift linkages for correct adjustment. REFER to Section 307-05A Automatic Transmission/Transaxle External Controls / 307-05B Automatic Transmission/Transaxle External Controls.
5. **5.** Visually inspect for obvious signs of mechanical, electrical or hydraulic damage.

Visual Inspection Chart

Mechanical	Electrical	Hydraulic
○ Damaged shift mechanism/linkages ○ Damaged automatic transmission/transaxle casing	○ Blown fuse ○ Wiring harness ○ Damaged transmission control module (TCM) ○ Damaged rotary switch ○ Damaged, loose or corroded connectors	○ Fluid level too high/low ○ Poor condition of fluid ○ Fluid leak

Basic diagnosis

Check Fluid Level and Condition

CAUTION: The vehicle should not be driven if the fluid level is low as internal failure can result.

• NOTE: The transmission oil temperature must not be allowed to exceed 40°C whilst checking level. Should the temperature rise above this figure, abort the check and allow the transmission oil to cool to below 30°C.

This vehicle is not equipped with a fluid level indicator. An incorrect level may affect the transmission operation and could result in transmission damage. To correctly check and add fluid to the transmission,
REFER to Transmission Fluid Level Check in this section.

High Fluid Level

A fluid level that is too high may cause the fluid to become aerated due to the churning action of the rotating internal parts. This will cause erratic control pressure, foaming, loss of fluid from the vent tube and possible transmission damage. If an overfill reading is indicated,
REFER to Transmission Fluid Drain and Refill in this section.

Low Fluid Level

A low fluid level could result in poor transmission engagement, slipping, or damage. This could also indicate a leak in one of the transmission seals or gaskets.
REFER to Transmission Fluid Level Check in this section.

Adding Fluid

CAUTION: The use of any other type of transmission fluid than specified can result in transmission damage.

If fluid needs to be added, add fluid in 0.50 liter increments through the fill hole opening. Do not overfill the fluid. For fluid type, refer to the General Specification chart in this section.
REFER to Transmission Fluid Level Check in this section.

Fluid Condition Check

1. **1.** Check the fluid level. For additional information,
   REFER to Transmission Fluid Drain and Refill in this section.
2. **2.** Observe the color and the odor. The color under normal circumstances should be reddish, not brown or black.
3. **3.** Allow the fluid to drip onto a facial tissue and examine the stain.
4. **4.** If evidence of solid material is found, the transmission fluid pan should be removed for further inspection.

NOTE: Being thermostatically controlled, the lubrication system cannot be completely flushed. In the event of a transmission unit replacement for internal failure, the oil cooler and pipes must also be replaced.

Shift Linkage Check

Hydraulic leakage at the manual control valve can cause delay in engagements and/or slipping while operating if the linkage is not correctly adjusted; REFER to Section 307-05A Automatic Transmission/Transaxle External Controls / 307-05B Automatic Transmission/Transaxle External Controls. for shift linkage adjustment.

Diagnostic Trouble Code (DTC) Index

CAUTION: When probing connectors to take measurements in the course of the pinpoint tests, use the adaptor kit, part number 3548-1358-00.

• NOTE: Check and rectify basic faults before beginning diagnostic routines involving pinpoint tests.

• NOTE: When performing electrical voltage or resistance tests, always use a digital multimeter (DMM) accurate to 3 decimal places, and with an up-to-date calibration certificate. When testing resistance, always take the resistance of the DMM leads into account.

DTC	Component	Description	Condition	Action
P0731, P0732, P0733, P0734, P0735	Input, intermediate, and output sensors	Gear ratio errors	Gear ratio out of range. Mechanical failure	REFER to pinpoint tests for individual sensors and shift solenoids.
P1573	This DTC does not indicate a component failure	Sympathetic DTCs from modules in CAN network	CAN throttle angle signal fail	REFER to Section 418-00 Module Communications Network.
P1601	Transmission control module (TCM)	Incorrect configuration	Incorrect configuration	Reconfigure module.
P1603	Transmission control module (TCM)	TCM EEPROM failure	TCM has lost it's adaptive values	REFER to Section 418-00 Module Communications Network.
P1796	CAN network	Wire or connection in the CAN network malfunction	The module does not respond to the Jaguar approved diagnostic system — No modules function	REFER to Section 418-00 Module Communications Network.
P1745	Low clutch timing solenoid	Solenoid or circuit malfunction	Harsh gear shifts	GO to Pinpoint Test A.
P1746	Reduction timing solenoid	Solenoid or circuit malfunction	Erratic engine braking	GO to Pinpoint Test B.
P1747	2/4 Brake timing solenoid	Solenoid or circuit malfunction	Erratic 2 and 4 ratios	GO to Pinpoint Test C.
P0706	Transmission range (TR) sensor	TR sensor or circuit malfunction	TR sensor out of range	GO to Pinpoint Test D.
P1777	This DTC does not indicate a component failure	Sympathetic DTCs from modules in CAN network	CAN torque reduction fail	REFER to Section 418-00 Module Communications Network.
P1780 (To VIN D15361)	D-4 switch malfunction	Switch or circuit malfunction	D-4 switch inoperative or out of range	GO to Pinpoint Test E.
P1793	TCM Ignition switched power malfunction	TCM, relay, power distribution fuse box	TCM inoperative	GO to Pinpoint Test F.
P1797	Engine control module (ECM)	Wire or connection in the CAN network	The module does not respond to the Jaguar approved diagnostic system — engine control module (ECM). No TCM communication to the ECM	REFER to Section 418-00 Module Communications Network.
P1799	Anti-Lock Brake Control Module or DSC	Wire or connection in the CAN network	The module does not respond to the Jaguar approved diagnostic system — Anti-Lock Brake Control Module or DSC. No TCM communication to Anti-Lock Brake System (ABS)	REFER to Section 418-00 Module Communications Network.
P0791 (To VIN C79328)	Intermediate speed sensor	ISS or circuit	Erratic gear shifts	GO to Pinpoint Test G.
P0791 (From VIN C79329)	Intermediate speed sensor (ISS)	ISS or circuit	Erratic gear shifts	GO to Pinpoint Test S.
P0720 (To VIN C79328)	Output speed sensor (OSS)	OSS or circuit	Erratic gear shifts	GO to Pinpoint Test H.
P0720 (From VIN C79328)	Output speed sensor (OSS)	OSS or circuit	Erratic gear shifts	GO to Pinpoint Test T.
P0715 (To VIN C79328)	Turbine speed sensor (TSS)	TSS or circuit	Erratic gear shifts	GO to Pinpoint Test I.
P0715 (From VIN C79329)	Turbine speed sensor (TSS)	TSS or circuit	Erratic gear shifts	GO to Pinpoint Test U.
P0710	Oil temperature sensor (OTS)	OTS or circuit	Erratic gear shifts, temperature malfunction	GO to Pinpoint Test J.
P0753	Shift solenoid **A** (SSA)	SSA Solenoid or circuit malfunction	Erratic gear shifts, 4th gear engaged	GO to Pinpoint Test K.
P0758	Shift solenoid **B** (SSB)	SSB Solenoid or circuit malfunction	Erratic gear shifts, 3rd/5th gear engaged	GO to Pinpoint Test L.
P0763	Shift solenoid **C** (SSC)	SSC Solenoid or circuit malfunction	Erratic gear shifts, 4th gear engaged	GO to Pinpoint Test M.
P0743	Torque converter clutch (TCC) solenoid	TCC Solenoid or circuit malfunction	No lock-up	GO to Pinpoint Test N.
P0740	Torque converter clutch	Torque converter clutch failure	No lock-up/permanent lock-up	INSTALL a new torque convertor.
P0748	Line pressure control (LPC) solenoid	LPC solenoid or circuit malfunction	Erratic transmission operation	GO to Pinpoint Test O.
P0778	2/4 Brake pressure control (BPC) circuit	2/4 BPC solenoid or circuit malfunction	Erratic gear shifts	GO to Pinpoint Test P.
P1710	Control valve solenoid GROUND	GROUND circuit	Erratic gear shifts	GO to Pinpoint Test Q.
P0915	J-Gate input	J-Gate or circuit malfunction	Left-hand side of the J-Gate inoperative	GO to Pinpoint Test R.

PINPOINT TEST A : P1745. LOW CLUTCH TIMING SOLENOID MALFUNCTION

TEST CONDITIONS	DETAILS/RESULTS/ACTIONS
A1: CHECK THE LOW CLUTCH TIMING SOLENOID GROUND CIRCUIT.	
	1 Disconnect transmission electrical connector JB155.
	2 Measure the resistance between JB155, pin 18 (B) and GROUND.

	Is the resistance greater than 5 ohms? **Yes** GO to A3. **No** GO to A2.
A2: CHECK THE LOW CLUTCH TIMING SOLENOID RESISTANCE.	
	1 Measure the resistance between transmission electrical connector JB155 pin 18 and pin 12 at the transmission.
	Is the resistance 16 ohms? **Yes** GO to A3. **No** INSTALL a new timing solenoid. CLEAR the DTC. TEST the system for normal operation.
A3: CHECK THE LOW CLUTCH TIMING SOLENOID GROUND WIRE FOR CONTINUITY.	
	1 Disconnect TCM electrical connector JB131.
	2 Measure the resistance between JB155, pin 18 (B) and JB131, pin 17 (B).
	Is the resistance greater than 5 ohms? **Yes** REPAIR the high resistance circuit. For additional information, refer to the wiring diagrams. CLEAR the DTC. TEST the system for normal operation. **No** Contact dealer technical support for advice on possible module failure.
A4: CHECK THE LOW CLUTCH TIMING SOLENOID SIGNAL WIRE FOR CONTINUITY.	
	1 Measure the resistance between JB155, pin 12 (Y) and JB131, pin 53 (Y).
	Is the resistance greater than 5 ohms? **Yes** REPAIR the high resistance circuit. For additional information, refer to the wiring diagrams. CLEAR the DTC. TEST the system for normal operation. **No** Contact dealer technical support for advice on possible module failure.

PINPOINT TEST B : P1746. REDUCTION TIMING SOLENOID MALFUNCTION	
TEST CONDITIONS	**DETAILS/RESULTS/ACTIONS**
B1: CHECK THE REDUCTION TIMING SOLENOID GROUND CIRCUIT.	
	1 Disconnect transmission electrical connector JB155.
	2 Measure the resistance between JB155, pin 18 (B) and GROUND.
	Is the resistance greater than 5 ohms? **Yes** GO to B3. **No** GO to B2.
B2: CHECK THE REDUCTION TIMING SOLENOID RESISTANCE.	
	1 Measure the resistance between JB155, pin 18 and pin 14 at the transmission.
	Is the resistance 16 ohms? **Yes** GO to B3. **No** INSTALL a new timing solenoid. CLEAR the DTC. TEST the system for normal operation.
B3: CHECK THE REDUCTION TIMING SOLENOID GROUND WIRE FOR CONTINUITY.	
	1 Disconnect TCM electrical connector JB131.
	2 Measure the resistance between JB155, pin 18 (B) and JB131, pin 17 (B).
	Is the resistance greater than 5 ohms? **Yes** REPAIR the high resistance circuit. For additional information, refer to the wiring diagrams. CLEAR the DTC. TEST the system for normal operation. **No** Contact dealer technical support for advice on possible module failure.
B4: CHECK THE REDUCTION TIMING SOLENOID SIGNAL WIRE FOR CONTINUITY.	
	1 Measure the resistance between JB155, pin 14 (W) and JB131, pin 10 (W).
	Is the resistance greater than 5 ohms? **Yes** REPAIR the high resistance circuit. For additional information, refer to the wiring diagrams. CLEAR the DTC. TEST the system for normal operation. **No** Contact dealer technical support for advice on possible module failure.

PINPOINT TEST C : P1747. 2/4 BRAKE TIMING SOLENOID MALFUNCTION	
TEST CONDITIONS	**DETAILS/RESULTS/ACTIONS**
C1: CHECK THE 2/4 BRAKE TIMING SOLENOID GROUND CIRCUIT.	
	1 Disconnect transmission electrical connector JB155.
	2 Measure the resistance between JB155, pin 18 (B) and GROUND.
	Is the resistance greater than 5 ohms? **Yes** GO to C3. **No** GO to C2.
C2: CHECK THE 2/4 BRAKE TIMING SOLENOID RESISTANCE.	
	1 Measure the resistance between JB155 pin 18 and pin 13 at the transmission.
	Is the resistance 16 ohms? **Yes** GO to C3. **No** INSTALL a new timing solenoid. CLEAR the DTC. TEST the system for normal operation.
C3: CHECK THE 2/4 BRAKE TIMING SOLENOID GROUND WIRE FOR CONTINUITY.	
	1 Disconnect TCM electrical connector JB131.

	2 Measure the resistance between JB155, pin 18 (B) and JB131, pin 17 (B).
	Is the resistance greater than 5 ohms? **Yes** REPAIR the high resistance circuit. For additional information, refer to the wiring diagrams. CLEAR the DTC. TEST the system for normal operation. **No** Contact dealer technical support for advice on possible module failure.
C4: CHECK THE 2/4 BRAKE TIMING SOLENOID SIGNAL WIRE FOR CONTINUITY.	
	1 Measure the resistance between JB155, pin 13 (U) and JB131, pin 04 (U).
	Is the resistance greater than 5 ohms? **Yes** REPAIR the high resistance circuit. For additional information, refer to the wiring diagrams. CLEAR the DTC. TEST the system for normal operation. **No** Contact dealer technical support for advice on possible module failure.

PINPOINT TEST D : P0706. TRANSMISSION RANGE SENSOR MALFUNCTION	
TEST CONDITIONS	**DETAILS/RESULTS/ACTIONS**
D1: CHECK TRANSMISSION RANGE SENSOR CONTINUITY IN PARK.	
	1 Disconnect TR sensor electrical connector JB156.
	2 Select **PARK**.
	3 Check for continuity between pins 08 and 09 of the sensor.
	Is the circuit continuous? **Yes** GO to D2. **No** Carry out the adjustment procedure for the transmission range sensor. REFER to Transmission Range (TR) Sensor Adjustment in this section. Recheck the circuit. If still open circuit, INSTALL a new transmission range sensor. REFER to Transmission Range (TR) Sensor in this section. CLEAR the DTC. TEST the system for normal operation.
D2: CHECK TRANSMISSION RANGE SENSOR CONTINUITY IN REVERSE.	
	1 Select **REVERSE**.
	2 Check for continuity between pins 08 and 07 of the sensor.
	Is the circuit continuous? **Yes** GO to D3. **No** Carry out the adjustment procedure for the transmission range sensor. REFER to Transmission Range (TR) Sensor Adjustment in this section. Recheck the circuit. If still open circuit, INSTALL a new transmission range sensor. REFER to Transmission Range (TR) Sensor in this section. CLEAR the DTC. TEST the system for normal operation.
D3: CHECK TRANSMISSION RANGE SENSOR CONTINUITY IN NEUTRAL.	
	1 Select **NEUTRAL**.
	2 Check for continuity between pins 08 and 02 of the sensor.
	Is the circuit continuous? **Yes** GO to D4. **No** Carry out the adjustment procedure for the transmission range sensor. REFER to Transmission Range (TR) Sensor Adjustment in this section. Recheck the circuit. If still open circuit, INSTALL a new transmission range sensor. REFER to Transmission Range (TR) Sensor in this section. CLEAR the DTC. TEST the system for normal operation.
D4: CHECK TRANSMISSION RANGE SENSOR CONTINUITY IN D.	
	1 Select **D**.
	2 Check for continuity between pins 08 and 01 of the sensor.
	Is the circuit continuous? **Yes** GO to D5. **No** Carry out the adjustment procedure for the transmission range sensor. REFER to Transmission Range (TR) Sensor Adjustment in this section. Recheck the circuit. If still open circuit, INSTALL a new transmission range sensor. REFER to Transmission Range (TR) Sensor in this section. CLEAR the DTC. TEST the system for normal operation.
D5: CHECK TRANSMISSION RANGE SENSOR CONTINUITY IN 2 (TO VIN D15361).	
	1 Select **2**.
	2 Check for continuity between pins 08 and 03 of the sensor.
	Is the circuit continuous? **Yes** GO to D6. **No** Carry out the adjustment procedure for the transmission range sensor. REFER to Transmission Range (TR) Sensor Adjustment in this section. Recheck the circuit. If still open circuit, INSTALL a new transmission range sensor. REFER to Transmission Range (TR) Sensor in this section. CLEAR the DTC. TEST the system for normal operation.
D6: CHECK TRANSMISSION RANGE SENSOR CONTINUITY IN 3 (TO VIN D15361).	
	1 Select **3**.
	2 Check for continuity between pins 08 and 04 of the sensor.
	Is the circuit continuous? **Yes** GO to D7. **No**

	Carry out the adjustment procedure for the transmission range sensor. REFER to Transmission Range (TR) Sensor Adjustment in this section. Recheck the circuit. If still open circuit, INSTALL a new transmission range sensor. REFER to Transmission Range (TR) Sensor in this section. CLEAR the DTC. TEST the system for normal operation.
D7: CHECK TRANSMISSION RANGE SENSOR GROUND CIRCUIT.	
	1 Measure the resistance between JB156, pin 08 (B) and GROUND.
	Is the resistance greater than 5 ohms? **Yes** REPAIR the high resistance circuit. For additional information, refer to the wiring diagrams. CLEAR the DTC. TEST the system for normal operation. **No** GO to D8.
D8: CHECK TRANSMISSION RANGE SENSOR PARK SIGNAL WIRE FOR CONTINUITY.	
	1 Disconnect the TCM electrical connector JB131.
	2 Measure the resistance between JB131, pin 30 (U) and the TR sensor electrical connector JB156, pin 09 (U).
	Is the resistance greater than 5 ohms? **Yes** REPAIR the high resistance circuit. For additional information, refer to the wiring diagrams. CLEAR the DTC. TEST the system for normal operation. **No** GO to D9.
D9: CHECK TRANSMISSION RANGE SENSOR REVERSE SIGNAL WIRE FOR CONTINUITY.	
	1 Measure the resistance between JB131, pin 26 (G) and JB156, pin 07 (G).
	Is the resistance greater than 5 ohms? **Yes** REPAIR the high resistance circuit. For additional information, refer to the wiring diagrams. CLEAR the DTC. TEST the system for normal operation. **No** GO to D10.
D10: CHECK TRANSMISSION RANGE SENSOR NEUTRAL SIGNAL WIRE FOR CONTINUITY.	
	1 Measure the resistance between JB131, pin 25 (W) and JB156, pin 02 (W).
	Is the resistance greater than 5 ohms? **Yes** REPAIR the high resistance circuit. For additional information, refer to the wiring diagrams. CLEAR the DTC. TEST the system for normal operation. **No** GO to D11.
D11: CHECK TRANSMISSION RANGE SENSOR DRIVE SIGNAL WIRE FOR CONTINUITY.	
	1 Measure the resistance between JB131, pin 27 (Y) and JB156, pin 01 (Y).
	Is the resistance greater than 5 ohms? **Yes** REPAIR the high resistance circuit. For additional information, refer to the wiring diagrams. CLEAR the DTC. TEST the system for normal operation. **No** GO to D12.
D12: CHECK TRANSMISSION RANGE SENSOR 2 SIGNAL WIRE FOR CONTINUITY (TO VIN D15361).	
	1 Measure the resistance between JB131, pin 08 (R) and JB156, pin 03 (R).
	Is the resistance greater than 5 ohms? **Yes** REPAIR the high resistance circuit. For additional information, refer to the wiring diagrams. CLEAR the DTC. TEST the system for normal operation. **No** GO to D13.
D13: CHECK TRANSMISSION RANGE SENSOR 3 SIGNAL WIRE FOR CONTINUITY (TO VIN D15361).	
	1 Measure the resistance between JB131, pin 07 (O) and JB156, pin 04 (O).
	Is the resistance greater than 5 ohms? **Yes** REPAIR the high resistance circuit. For additional information, refer to the wiring diagrams. CLEAR the DTC. TEST the system for normal operation. **No** INSTALL a new TCM. REFER to Transmission Control Module (TCM) - in this section. CLEAR the DTC. TEST the system for normal operation.

PINPOINT TEST E : P1780. D-4 SWITCH MALFUNCTION (TO VIN D15361)

• NOTE: Incorrect adjustment of the selector cable could result in this DTC being set with no electrical fault being present. REFER to Section 307-05A Automatic Transmission/Transaxle External Controls / 307-05B Automatic Transmission/Transaxle External Controls.

TEST CONDITIONS	DETAILS/RESULTS/ACTIONS
E1: CHECK POWER SUPPLY TO THE J-GATE.	
	1 Disconnect the J-Gate electrical connector, IP14.
	2 Turn the ignition switch to the **ON** position.
	3 Measure the voltage between IP14, pin 01 (WR) and GROUND.
	Is the voltage less than 10 volts? **Yes** REPAIR the circuit between IP14, pin 01 (WR) and the ignition switch (this circuit includes the central junction fuse box, ignition relay, and inertia switch). For additional information, refer to the wiring diagrams. CLEAR the DTC. TEST the system for normal operation. **No** GO to E2.
E2: CHECK GROUND SUPPLY TO THE J-GATE.	
	1 Turn the ignition switch to the **OFF** position.
	2 Measure the resistance between IP14, pin 02 (B) and GROUND.

	Is the resistance greater than 5 ohms? **Yes** REPAIR the high resistance circuit. For additional information, refer to the wiring diagrams. CLEAR the DTC. TEST the system for normal operation. **No** GO to E3.
E3: CHECK D-4 SWITCH SIGNAL WIRE FOR HIGH RESISTANCE.	
	1 Measure the resistance between IP14, pin 05 (BW) and JB131, pin 45 (BW).
	Is the resistance greater than 5 ohms? **Yes** REPAIR the high resistance circuit. For additional information, refer to the wiring diagrams. CLEAR the DTC. TEST the system for normal operation. **No** INSTALL a new J-Gate. REFER to Section 307-05A Automatic Transmission/Transaxle External Controls / 307-05B Automatic Transmission/Transaxle External Controls.

PINPOINT TEST F : P1793. TCM IGNITION SWITCHED POWER MALFUNCTION	
TEST CONDITIONS	**DETAILS/RESULTS/ACTIONS**
F1: CHECK TRANSMISSION CONTROL MODULE IGNITION SWITCHED POWER SUPPLY CIRCUIT.	
	1 Disconnect TCM electrical connector, JB131.
	2 Turn the ignition switch to the **ON** position.
	3 Measure the voltage between JB131, pin 36 (WU) and GROUND.
	Is the voltage less than 10 volts? **Yes** REPAIR the circuit between TCM electrical connector JB131, pin 36 (WU) and the battery power bus 1 (this circuit includes the TCM relay and power distribution fuse box). For additional information, refer to the wiring diagrams. CLEAR the DTC. TEST the system for normal operation. **No** GO to F2.
F2: CHECK TRANSMISSION CONTROL MODULE IGNITION SWITCHED POWER SUPPLY CIRCUIT.	
	1 Measure the voltage between JB131, pin 54 (WU) and GROUND.
	Is the voltage less than 10 volts? **Yes** REPAIR the circuit between JB131, pin 54 (WU) and the battery power bus 1 (this circuit includes the TCM relay and power distribution fuse box). For additional information, refer to the wiring diagrams. CLEAR the DTC. TEST the system for normal operation. **No** Contact dealer technical support for advice on possible module failure.

PINPOINT TEST G : P0791. INTERMEDIATE SPEED SENSOR MALFUNCTION (ONLY UP TO VIN C79328)	
TEST CONDITIONS	**DETAILS/RESULTS/ACTIONS**
G1: CHECK THE INTERMEDIATE SPEED SENSOR GROUND CIRCUIT.	
	1 Disconnect the transmission electrical connector, JB155.
	2 Measure the resistance between JB155, pin 03 (B) and GROUND (shielded cable).
	Is the resistance greater than 5 ohms? **Yes** REPAIR the high resistance circuit. For additional information, refer to the wiring diagrams. CLEAR the DTC. TEST the system for normal operation. **No** GO to G3.
G2: CHECK THE INTERMEDIATE SPEED SENSOR GROUND CIRCUIT FOR CONTINUITY.	
	1 Disconnect the TCM electrical connector, JB131.
	2 Measure the resistance between transmission electrical connector JB155, pin 03 (B) and TCM electrical connector JB131, pin 20 (B).
	Is the resistance greater than 5 ohms? **Yes** REPAIR the high resistance circuit. For additional information, refer to the wiring diagrams. CLEAR the DTC. TEST the system for normal operation. **No** GO to G3.
G3: CHECK THE INTERMEDIATE SPEED SENSOR SIGNAL WIRE FOR CONTINUITY.	
	1 Measure the resistance between JB155, pin 04 (N) and JB131, pin 21 (N).
	Is the resistance greater than 5 ohms? **Yes** REPAIR the high resistance circuit . For additional information, refer to the wiring diagrams. CLEAR the DTC. TEST the system for normal operation. **No** GO to G4.
G4: CHECK THE RESISTANCE OF THE INTERMEDIATE SPEED SENSOR.	
	1 Measure the resistance between JB155, pin 03 and pin 04 at the transmission.
	Is the resistance 550 ohms? **Yes** Contact dealer technical support for advice on possible module failure. **No** INSTALL a new transaxle. REFER to Transaxle - in this section. CLEAR the DTC. TEST the system for normal operation.

PINPOINT TEST H : P0720. OUTPUT SPEED SENSOR MALFUNCTION (TO VIN C79328)	
TEST CONDITIONS	**DETAILS/RESULTS/ACTIONS**
H1: CHECK THE OUTPUT SPEED SENSOR GROUND CIRCUIT.	
	1 Disconnect the transmission electrical connector, JB155.
	2 Measure the resistance between JB155, pin 05 (B) and GROUND (shielded cable).

	Is the resistance greater than 5 ohms? **Yes** REPAIR the high resistance circuit. For additional information, refer to the wiring diagrams. CLEAR the DTC. TEST the system for normal operation. **No** GO to H3.
H2: CHECK THE OUTPUT SPEED SENSOR GROUND CIRCUIT FOR CONTINUITY.	
	1 Disconnect the TCM electrical connector, JB131.
	2 Measure the resistance between JB155, pin 05 (B) and JB131, pin 20 (B).
	Is the resistance greater than 5 ohms? **Yes** REPAIR the high resistance circuit. For additional information, refer to the wiring diagrams. CLEAR the DTC. TEST the system for normal operation. **No** GO to H3.
H3: CHECK THE OUTPUT SPEED SENSOR SIGNAL WIRE FOR CONTINUITY.	
	1 Measure the resistance between JB155, pin 06 (N) and JB131, pin 05 (N).
	Is the resistance greater than 5 ohms? **Yes** REPAIR the high resistance circuit. For additional information, refer to the wiring diagrams. CLEAR the DTC. TEST the system for normal operation. **No** GO to H4.
H4: CHECK THE RESISTANCE OF THE OUTPUT SPEED SENSOR.	
	1 Measure the resistance between JB155, pin 05 and pin 06 at the transmission.
	Is the resistance 550 ohms? **Yes** Contact dealer technical support for advice on possible module failure. **No** INSTALL a new transaxle. REFER to Transaxle - in this section. CLEAR the DTC. TEST the system for normal operation.

PINPOINT TEST I : P0715. TURBINE SPEED SENSOR MALFUNCTION (TO VIN C79328)	
TEST CONDITIONS	**DETAILS/RESULTS/ACTIONS**
I1: CHECK THE TURBINE SPEED SENSOR GROUND CIRCUIT.	
	1 Disconnect the transmission electrical connector, JB155.
	2 Measure the resistance between JB155, pin 01 (B) and GROUND (shielded cable).
	Is the resistance greater than 5 ohms? **Yes** REPAIR the high resistance circuit. For additional information, refer to the wiring diagrams. CLEAR the DTC. TEST the system for normal operation. **No** GO to I3.
I2: CHECK THE TURBINE SPEED SENSOR GROUND CIRCUIT FOR CONTINUITY.	
	1 Disconnect the TCM electrical connector, JB131.
	2 Measure the resistance between JB155, pin 01 (B) and JB131, pin 20 (B).
	Is the resistance greater than 5 ohms? **Yes** REPAIR the high resistance circuit. For additional information, refer to the wiring diagrams. CLEAR the DTC. TEST the system for normal operation. **No** GO to I3.
I3: CHECK THE TURBINE SPEED SENSOR SIGNAL WIRE FOR CONTINUITY.	
	1 Measure the resistance between JB155, pin 02 (N) and TCM electrical connector, JB131, pin 24 (N).
	Is the resistance greater than 5 ohms? **Yes** REPAIR the high resistance circuit. For additional information, refer to the wiring diagrams. CLEAR the DTC. TEST the system for normal operation. **No** GO to I4.
I4: CHECK THE RESISTANCE OF THE OUTPUT SPEED SENSOR.	
	1 Measure the resistance between JB155, pin 01 and pin 02 at the transmission.
	Is the resistance 550 ohms? **Yes** Contact dealer technical support for advice on possible module failure. **No** INSTALL a new transaxle. REFER to Transaxle - in this section. CLEAR the DTC. TEST the system for normal operation.

PINPOINT TEST J : P0710. OIL TEMPERATURE SENSOR MALFUNCTION	
TEST CONDITIONS	**DETAILS/RESULTS/ACTIONS**
J1: CHECK THE OIL TEMPERATURE SENSOR GROUND CIRCUIT.	
	1 Disconnect the transmission electrical connector, JB155.
	2 Measure the resistance between JB155, pin 08 (B) and GROUND.
	Is the resistance greater than 5 ohms? **Yes** REPAIR the high resistance circuit. For additional information, refer to the wiring diagrams. CLEAR the DTC. TEST the system for normal operation. **No** GO to J3.
J2: CHECK THE OIL TEMPERATURE SENSOR GROUND CIRCUIT FOR CONTINUITY.	
	1 Disconnect the TCM electrical connector, JB131.
	2 Measure the resistance between JB155, pin 08 (B) and JB131 pin 20 (B).

	Is the resistance greater than 5 ohms? **Yes** REPAIR the high resistance circuit. For additional information, refer to the wiring diagrams. CLEAR the DTC. TEST the system for normal operation. **No** GO to J3.
J3: CHECK THE OIL TEMPERATURE SENSOR SIGNAL WIRE FOR CONTINUITY.	
	1 Measure the resistance between JB155, pin 07 (W) and JB131, pin 39 (W).
	Is the resistance greater than 5 ohms? **Yes** REPAIR the high resistance circuit. For additional information, refer to the wiring diagrams. CLEAR the DTC. TEST the system for normal operation. **No** GO to J4.
J4: CHECK THE OIL TEMPERATURE SENSOR RESISTANCE.	
	1 Measure the resistance between JB155, pin 07 and pin 08 at the transmission.
	Is the resistance 2,000-5,000 ohms at room temperature? **Yes** Contact dealer technical support for advice on possible module failure. **No** INSTALL a new transaxle. REFER to Transaxle - in this section. CLEAR the DTC. TEST the system for normal operation.

PINPOINT TEST K : P0753. SHIFT SOLENOID A MALFUNCTION	
TEST CONDITIONS	**DETAILS/RESULTS/ACTIONS**
K1: CHECK THE SHIFT SOLENOID A GROUND CIRCUIT.	
	1 Disconnect the transmission electrical connector, JB155.
	2 Measure the resistance between JB155, pin 18 (B) and GROUND.
	Is the resistance greater than 5 ohms? **Yes** GO to K3. **No** GO to K2.
K2: CHECK THE SHIFT SOLENOID A RESISTANCE.	
	1 Measure the resistance between JB155, pin 09 and pin 18 at the transmission.
	Is the resistance 16 ohms? **Yes** GO to K3. **No** INSTALL a new shift solenoid. REFER to Shift Solenoids (SS) - in this section. CLEAR the DTC. TEST the system for normal operation.
K3: CHECK THE SHIFT SOLENOID A GROUND WIRE FOR CONTINUITY.	
	1 Disconnect the TCM electrical connector, JB131.
	2 Measure the resistance between JB155, pin 18 (B) and JB131, pin 17 (B).
	Is the resistance greater than 5 ohms? **Yes** REPAIR the high resistance circuit. For additional information, refer to the wiring diagrams. CLEAR the DTC. TEST the system for normal operation. **No** Contact dealer technical support for advice on possible module failure.
K4: CHECK THE SHIFT SOLENOID A SIGNAL WIRE FOR CONTINUITY.	
	1 Measure the resistance between JB155, pin 09 (B) and TCM electrical connector JB131, pin 15 (B).
	Is the resistance greater than 5 ohms? **Yes** REPAIR the high resistance circuit. For additional information, refer to the wiring diagrams. CLEAR the DTC. TEST the system for normal operation. **No** Contact dealer technical support for advice on possible module failure.

PINPOINT TEST L : P0758. SHIFT SOLENOID B MALFUNCTION	
TEST CONDITIONS	**DETAILS/RESULTS/ACTIONS**
L1: CHECK THE SHIFT SOLENOID B GROUND CIRCUIT.	
	1 Disconnect the transmission electrical connector, JB155.
	2 Measure the resistance between JB155, pin 18 (B) and GROUND.
	Is the resistance greater than 5 ohms? **Yes** GO to L3. **No** GO to L2.
L2: CHECK THE SHIFT SOLENOID B RESISTANCE.	
	1 Measure the resistance between JB155, pin 10 and pin 18 at the transmission.
	Is the resistance 16 ohms? **Yes** GO to L4. **No** INSTALL a new shift solenoid. REFER to Shift Solenoids (SS) - in this section. CLEAR the DTC. TEST the system for normal operation.
L3: CHECK THE SHIFT SOLENOID B GROUND WIRE FOR CONTINUITY.	
	1 Disconnect the TCM electrical connector, JB131.
	2 Measure the resistance between JB155, pin 18 (B) and JB131, pin 17 (B).

	Is the resistance greater than 5 ohms? **Yes** REPAIR the high resistance circuit. For additional information, refer to the wiring diagrams. CLEAR the DTC. TEST the system for normal operation. **No** Contact dealer technical support for advice on possible module failure.
L4: CHECK THE SHIFT SOLENOID B SIGNAL WIRE FOR CONTINUITY.	
	1 Measure the resistance between JB155, pin 10 (N) and JB131, pin 14 (N).
	Is the resistance greater than 5 ohms? **Yes** REPAIR the high resistance circuit. For additional information, refer to the wiring diagrams. CLEAR the DTC. TEST the system for normal operation. **No** Contact dealer technical support for advice on possible module failure.

PINPOINT TEST M : P0763. SHIFT SOLENOID C MALFUNCTION	
TEST CONDITIONS	**DETAILS/RESULTS/ACTIONS**
M1: CHECK THE SHIFT SOLENOID C GROUND CIRCUIT.	
	1 Disconnect the transmission electrical connector, JB155.
	2 Measure the resistance between JB155, pin 18 (B) and GROUND.
	Is the resistance greater than 5 ohms? **Yes** GO to M3. **No** GO to M2.
M2: CHECK THE SHIFT SOLENOID C RESISTANCE.	
	1 Measure the resistance between JB155, pins 11 and 18 at the transmission.
	Is the resistance 16 ohms? **Yes** GO to M4. **No** INSTALL a new shift solenoid. REFER to Shift Solenoids (SS) - in this section. CLEAR the DTC. TEST the system for normal operation.
M3: CHECK THE SHIFT SOLENOID C GROUND WIRE FOR CONTINUITY.	
	1 Disconnect the TCM electrical connector, JB131.
	2 Measure the resistance between JB155, pin 18 (B) and JB131, pin 17 (B).
	Is the resistance greater than 5 ohms? **Yes** REPAIR the high resistance circuit. For additional information, refer to the wiring diagrams. CLEAR the DTC. TEST the system for normal operation. **No** Contact dealer technical support for advice on possible module failure.
M4: CHECK THE SHIFT SOLENOID C SIGNAL WIRE FOR CONTINUITY.	
	1 Measure the resistance between JB155, pin 11 (G) and JB131, pin 52 (G).
	Is the resistance greater than 5 ohms? **Yes** REPAIR the high resistance circuit. For additional information, refer to the wiring diagrams. CLEAR the DTC. TEST the system for normal operation. **No** Contact dealer technical support for advice on possible module failure.

PINPOINT TEST N : P0743. TORQUE CONVERTER CLUTCH SOLENOID MALFUNCTION	
TEST CONDITIONS	**DETAILS/RESULTS/ACTIONS**
N1: CHECK THE TORQUE CONVERTER CLUTCH SOLENOID GROUND CIRCUIT.	
	1 Disconnect the transmission electrical connector, JB155.
	2 Measure the resistance between JB155, pin 18 (B) and GROUND.
	Is the resistance greater than 5 ohms? **Yes** GO to N3. **No** GO to N2.
N2: CHECK THE TORQUE CONVERTER CLUTCH SOLENOID RESISTANCE.	
	1 Measure the resistance between JB155, pin 17 and pin 18 at the transmission.
	Is the resistance 12.6 ohms? **Yes** GO to N4. **No** INSTALL a new TCC solenoid. CLEAR the DTC. TEST the system for normal operation.
N3: CHECK THE TORQUE CONVERTER CLUTCH SOLENOID GROUND WIRE FOR CONTINUITY.	
	1 Disconnect the TCM electrical connector, JB131.
	2 Measure the resistance between JB155, pin 18 (B) and JB131, pin 17 (B).
	Is the resistance greater than 5 ohms? **Yes** REPAIR the high resistance circuit. For additional information, refer to the wiring diagrams. CLEAR the DTC. TEST the system for normal operation. **No** Contact dealer technical support for advice on possible module failure.
N4: CHECK THE TORQUE CONVERTER CLUTCH SOLENOID SIGNAL WIRE FOR CONTINUITY.	
	1 Measure the resistance between JB155, pin 17 (O) and JB131, pin 16 (O).
	Is the resistance greater than 5 ohms? **Yes** REPAIR the high resistance circuit. For additional information, refer to the wiring diagrams. CLEAR the DTC. TEST the system for normal operation. **No**

	Contact dealer technical support for advice on possible module failure.

PINPOINT TEST O : P0748. LINE PRESSURE CONTROL SOLENOID MALFUNCTION	
TEST CONDITIONS	**DETAILS/RESULTS/ACTIONS**
O1: CHECK THE LINE PRESSURE CONTROL SOLENOID GROUND CIRCUIT.	
	1 Disconnect the transmission electrical connector, JB155.
	2 Measure the resistance between JB155, pin 18 (B) and GROUND.
	Is the resistance greater than 5 ohms? **Yes** GO to O3. **No** GO to O2.
O2: CHECK THE LINE PRESSURE CONTROL SOLENOID RESISTANCE.	
	1 Measure the resistance between JB155, pin 15 and pin 18 at the transmission.
	Is the resistance 2.9 ohms? **Yes** GO to O4. **No** INSTALL a new LPC solenoid. CLEAR the DTC. TEST the system for normal operation.
O3: CHECK THE LINE PRESSURE CONTROL SOLENOID GROUND WIRE FOR CONTINUITY.	
	1 Disconnect the TCM electrical connector, JB131.
	2 Measure the resistance between JB155, pin 18 (B) and JB131, pin 17 (B).
	Is the resistance greater than 5 ohms? **Yes** REPAIR the high resistance circuit. For additional information, refer to the wiring diagrams. CLEAR the DTC. TEST the system for normal operation. **No** Contact dealer technical support for advice on possible module failure.
O4: CHECK THE LINE PRESSURE CONTROL SOLENOID SIGNAL WIRE FOR CONTINUITY.	
	1 Measure the resistance between JB155, pin 15 (R) and JB131, pin 18 (R).
	Is the resistance greater than 5 ohms? **Yes** For additional information, refer to the wiring diagrams. CLEAR the DTC. TEST the system for normal operation. **No** Contact dealer technical support for advice on possible module failure.

PINPOINT TEST P : P0778. 2/4 BRAKE DUTY PRESSURE CONTROL SOLENOID MALFUNCTION	
TEST CONDITIONS	**DETAILS/RESULTS/ACTIONS**
P1: CHECK THE 2/4 BRAKE DUTY PRESSURE CONTROL SOLENOID GROUND CIRCUIT.	
	1 Disconnect the transmission electrical connector, JB155.
	2 Measure the resistance between JB155, pin 18 (B) and GROUND.
	Is the resistance greater than 5 ohms? **Yes** GO to P3. **No** GO to P2.
P2: CHECK THE 2/4 BRAKE DUTY PRESSURE CONTROL SOLENOID RESISTANCE.	
	1 Measure the resistance between JB155, pin 16 and pin 18 at the transmission.
	Is the resistance 2.9 ohms? **Yes** INSTALL a new 2/4 brake duty pressure control solenoid. CLEAR the DTC. TEST the system for normal operation. **No** GO to P4.
P3: CHECK THE 2/4 BRAKE DUTY PRESSURE CONTROL SOLENOID GROUND WIRE FOR CONTINUITY.	
	1 Disconnect the TCM electrical connector, JB131.
	2 Measure the resistance between JB155, pin 18 (B) and JB131, pin 17 (B).
	Is the resistance greater than 5 ohms? **Yes** REPAIR the high resistance circuit. For additional information, refer to the wiring diagrams. CLEAR the DTC. TEST the system for normal operation. **No** Contact dealer technical support for advice on possible module failure.
P4: CHECK THE 2/4 BRAKE DUTY PRESSURE CONTROL SOLENOID SIGNAL WIRE FOR CONTINUITY.	
	1 Measure the resistance between JB155, pin 16 (G) and JB131, pin 03 (G).
	Is the resistance greater than 5 ohms? **Yes** REPAIR the high resistance circuit. For additional information, refer to the wiring diagrams. CLEAR the DTC. TEST the system for normal operation. **No** Contact dealer technical support for advice on possible module failure.

PINPOINT TEST Q : P1710. CONTROL VALVE SOLENOID GROUND.	
TEST CONDITIONS	**DETAILS/RESULTS/ACTIONS**
Q1: CHECK CONTROL VALVE SOLENOID GROUND CIRCUIT.	
	1 Disconnect transmission electrical connector, JB155.
	2 Measure the resistance between JB155, pin 18 (B) and GROUND.
	Is the resistance greater than 5 ohms? **Yes** GO to Q2. **No** No electrical fault in GROUND circuit. Possible internal fault. Recheck DTCs.
Q2: CHECK CONTROL VALVE SOLENOID GROUND WIRE FOR CONTINUITY.	
	1 Disconnect TCM electrical connector, JB131.

	2 Measure the resistance between JB155, pin 18 (B) and JB131, pin 17 (B).
	Is the resistance greater than 5 ohms? **Yes** REPAIR the high resistance circuit. For additional information, refer to the wiring diagrams. CLEAR the DTC. TEST the system for normal operation. **No** Contact dealer technical support for advice on possible module failure.

PINPOINT TEST R : P0915 J-GATE SIGNAL INPUTS TO THE TCM.	
• NOTE: Incorrect adjustment of the selector cable could result in this DTC being set with no electrical fault being present. REFER to Section 307-05A Automatic Transmission/Transaxle External Controls / 307-05B Automatic Transmission/Transaxle External Controls.	
TEST CONDITIONS	**DETAILS/RESULTS/ACTIONS**
R1: CHECK TRANSMISSION RANGE SENSOR CONTINUITY IN D.	
	1 Disconnect TR sensor electrical connector JB156.
	2 Select **D**.
	3 Check for continuity between JB156, pin 08 and pin 01 at the sensor.
	Is the circuit continuous? **Yes** GO to R2. **No** Carry out the adjustment procedure for the transmission range sensor. REFER to Transmission Range (TR) Sensor Adjustment in this section. Recheck the circuit. If still open circuit, INSTALL a new transmission range sensor. REFER to Transmission Range (TR) Sensor in this section. CLEAR the DTC. TEST the system for normal operation.
R2: CHECK TRANSMISSION RANGE SENSOR DRIVE SIGNAL WIRE FOR HIGH RESISTANCE.	
	1 Disconnect the TCM electrical connector, JB131.
	2 Measure the resistance between JB131, pin 27 (Y) and JB156, pin 01 (Y).
	Is the resistance greater than 5 ohms? **Yes** REPAIR the high resistance circuit. For additional information, refer to the wiring diagrams. CLEAR the DTC. TEST the system for normal operation. **No** GO to R3.
R3: CHECK POWER SUPPLY TO THE J-GATE.	
	1 Disconnect the J-Gate electrical connector, IP14.
	2 Turn the ignition switch to the **ON** position.
	3 Measure the voltage between IP14, pin 01 (WR) and GROUND.
	Is the voltage less than 10 volts? **Yes** REPAIR the circuit between IP14, pin 01 (WR) and the ignition switch (this circuit includes the central junction fuse box, ignition relay, and inertia switch). For additional information, refer to the wiring diagrams. CLEAR the DTC. TEST the system for normal operation. **No** GO to R4.
R4: CHECK GROUND SUPPLY TO THE J-GATE.	
	1 Turn the ignition switch to the **OFF** position.
	2 Measure the resistance between J-Gate electrical connector IP14, pin 02 (B) and GROUND.
	Is the resistance greater than 5 ohms? **Yes** REPAIR the high resistance circuit. For additional information, refer to the wiring diagrams. CLEAR the DTC. TEST the system for normal operation. **No** GO to R5.
R5: CHECK J-GATE SIGNAL INPUT WIRES FOR CONTINUITY (4 RANGE).	
	1 Disconnect the TCM electrical connector JB131.
	2 Measure the resistance between IP14 pin 05 (BW) and JB131 pin 45 (BW).
	Is the resistance greater than 5 ohms? **Yes** REPAIR the high resistance circuit. For additional information, refer to the wiring diagrams. CLEAR the DTC. TEST the system for normal operation. **No** GO to R6.
R6: CHECK THE J-GATE SIGNAL INPUT WIRES FOR CONTINUITY (3 RANGE).	
	1 Measure the resistance between IP14 pin 15 (O) and JB131 pin 07 (O).
	Is the resistance greater than 5 ohms? **Yes** REPAIR the high resistance circuit. For additional information, refer to the wiring diagrams. CLEAR the DTC. TEST the system for normal operation. **No** GO to R7.
R7: CHECK THE J-GATE SIGNAL INPUT WIRES FOR CONTINUITY (2 RANGE).	
	1 Measure the resistance between IP14 pin 14 (R) and JB131 pin 08 (R).
	Is the resistance less than 5 ohms? **Yes** GO to R8. **No** REPAIR the high resistance circuit. For additional information, refer to the wiring diagrams. CLEAR the DTC. TEST the system for normal operation.
R8: J-GATE SIGNALS FUNCTIONALITY	
	1 If tests between R1 and R7 have been successfully completed and the fault is still present, INSTALL a new J-Gate.
	2 CLEAR the DTC.
	3 TEST the system for normal operation.

	Does the system function correctly? **Yes** No further action required. **No** Contact dealer technical support for advice on possible module failure.

PINPOINT TEST S : P0791. INTERMEDIATE SPEED SENSOR MALFUNCTION (FROM VIN C79329)	
TEST CONDITIONS	**DETAILS/RESULTS/ACTIONS**
S1: CHECK THE INTERMEDIATE SPEED SENSOR GROUND CIRCUIT.	
	1 Disconnect the transmission electrical connector, JB155.
	2 Measure the resistance between JB155, pin 03 (B) and GROUND (shielded cable).
	Is the resistance greater than 5 ohms? **Yes** REPAIR the high resistance circuit. For additional information, refer to the wiring diagrams. CLEAR the DTC. TEST the system for normal operation. **No** GO to S2.
S2: CHECK THE INTERMEDIATE SPEED SENSOR GROUND CIRCUIT FOR CONTINUITY.	
	1 Disconnect the TCM electrical connector, JB131.
	2 Measure the resistance between JB155, pin 03 (B) and JB131, pin 46 (B).
	Is the resistance greater than 5 ohms? **Yes** REPAIR the high resistance circuit. For additional information, refer to the wiring diagrams. CLEAR the DTC. TEST the system for normal operation. **No** GO to S3.
S3: CHECK THE INTERMEDIATE SPEED SENSOR SIGNAL WIRE FOR CONTINUITY.	
	1 Measure the resistance between JB155, pin 4 (N) and JB131, pin 21 (N).
	Is the resistance greater than 5 ohms? **Yes** REPAIR the high resistance circuit. For additional information, refer to the wiring diagrams. CLEAR the DTC. TEST the system for normal operation. **No** GO to G4.
S4: CHECK THE RESISTANCE OF THE INTERMEDIATE SPEED SENSOR.	
	1 Measure the resistance between JB155, pin 13 and pin 04 at the transmission.
	Is the resistance 550 ohms? **Yes** Contact dealer technical support for advice on possible module failure. **No** INSTALL a new transaxle. REFER to Transaxle - in this section. CLEAR the DTC. TEST the system for normal operation.

PINPOINT TEST T : P0720. OUTPUT SPEED SENSOR MALFUNCTION (FROM VIN C79329)	
TEST CONDITIONS	**DETAILS/RESULTS/ACTIONS**
T1: CHECK THE OUTPUT SPEED SENSOR GROUND CIRCUIT.	
	1 Disconnect the transmission electrical connector, JB155.
	2 Measure the resistance between JB155, pin 05 (B) and GROUND (shielded cable).
	Is the resistance greater than 5 ohms? **Yes** REPAIR the high resistance circuit. For additional information, refer to the wiring diagrams. CLEAR the DTC. TEST the system for normal operation. **No** GO to T2.
T2: CHECK THE OUTPUT SPEED SENSOR GROUND CIRCUIT FOR CONTINUITY.	
	1 Disconnect the TCM electrical connector, JB131.
	2 Measure the resistance between JB155, pin 05 (B) and JB131, pin 42 (B).
	Is the resistance greater than 5 ohms? **Yes** REPAIR the high resistance circuit. For additional information, refer to the wiring diagrams. CLEAR the DTC. TEST the system for normal operation. **No** GO to T3.
T3: CHECK THE OUTPUT SPEED SENSOR SIGNAL WIRE FOR CONTINUITY.	
	1 Measure the resistance between JB155, pin 06 (N) and JB131, pin 05 (N).
	Is the resistance greater than 5 ohms? **Yes** REPAIR the high resistance circuit. For additional information, refer to the wiring diagrams. CLEAR the DTC. TEST the system for normal operation. **No** GO to T4.
T4: CHECK THE RESISTANCE OF THE OUTPUT SPEED SENSOR.	
	1 Measure the resistance between JB155, pin 05 and pin 06 at the transmission.
	Is the resistance 550 ohms? **Yes** Contact dealer technical support for advice on possible module failure. **No** INSTALL a new transaxle. REFER to Transaxle - in this section. CLEAR the DTC. TEST the system for normal operation.

PINPOINT TEST U : P0715. TURBINE SPEED SENSOR MALFUNCTION (FROM VIN C79329)	
TEST CONDITIONS	**DETAILS/RESULTS/ACTIONS**

U1: CHECK THE TURBINE SPEED SENSOR GROUND CIRCUIT.	
	1 Disconnect the transmission electrical connector, JB155.
	2 Measure the resistance between JB155, pin 01 (B) and GROUND (shielded cable).
	Is the resistance greater than 5 ohms? **Yes** REPAIR the high resistance circuit. For additional information, refer to the wiring diagrams. CLEAR the DTC. TEST the system for normal operation. **No** GO to U2.
U2: CHECK THE TURBINE SPEED SENSOR GROUND CIRCUIT FOR CONTINUITY.	
	1 Disconnect the TCM electrical connector, JB131.
	2 Measure the resistance between JB155, pin 01 (B) and JB131, pin 44 (B).
	Is the resistance greater than 5 ohms? **Yes** REPAIR the high resistance circuit. For additional information, refer to the wiring diagrams. CLEAR the DTC. TEST the system for normal operation. **No** GO to U3.
U3: CHECK THE TURBINE SPEED SENSOR SIGNAL WIRE FOR CONTINUITY.	
	1 Measure the resistance between JB155, pin 2 (N) and JB131, pin 24 (N).
	Is the resistance greater than 5 ohms? **Yes** REPAIR the high resistance circuit. For additional information, refer to the wiring diagrams. CLEAR the DTC. TEST the system for normal operation. **No** GO to U4.
U4: CHECK THE RESISTANCE OF THE OUTPUT SPEED SENSOR.	
	1 Measure the resistance between JB155, pin 01 and pin 02 at the transmission.
	Is the resistance 550 ohms? **Yes** Contact dealer technical support for advice on possible module failure. **No** INSTALL a new transaxle. REFER to Transaxle - in this section. CLEAR the DTC. TEST the system for normal operation.

Automatic Transmission / Transaxle - Vehicles With: 5-Speed Automatic Transaxle - JATCO - Transmission Fluid Drain and Refill

General Procedures

Drain

1. Raise and support the vehicle. For additional information, refer to
   For additional information, refer to: Lifting (100-02 Jacking and Lifting, Description and Operation).
   .
2. Place a suitable container under the transmission drain plug.

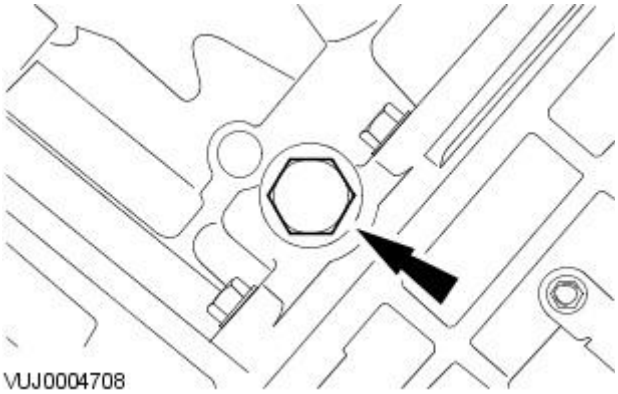

3. CAUTION: If the automatic transmission fluid is very dirty or it contains metallic particles, then along with a new transmission, install a new automatic transmission fluid cooler and lines.

   Remove the transmission drain plug.

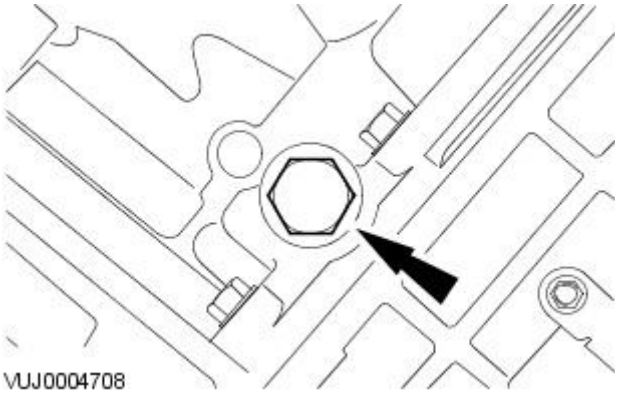

4. Install the transmission drain plug.
   - Tighten to 45 Nm.

Refill

5. Lower the vehicle.
6. Remove the automatic transmission fluid charging pipe cap.

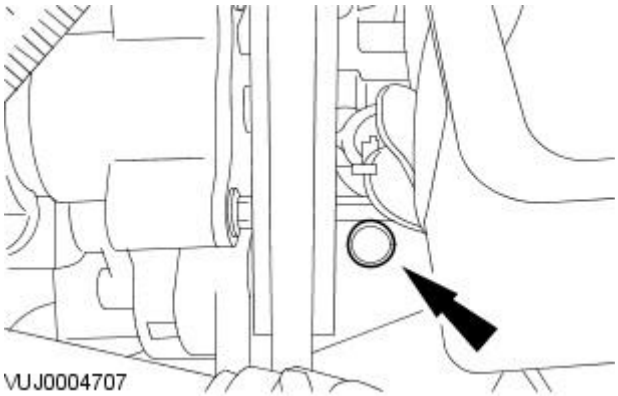

7. NOTE: Use automatic transmission fluid WSS-M2C922-A1 or equivalent meeting Jaguar specification.

   Fill the automatic transmission with 8 litres of automatic transmission fluid through the automatic transmission fluid charging pipe.
8. Carry out a fluid level check and adjustment. For additional information, refer to
   For additional information, refer to: Transmission Fluid Level Check (307-01B Automatic Transmission/Transaxle - Vehicles With: 6-Speed Automatic Transaxle - AWF21, General Procedures).

Automatic Transmission / Transaxle - Vehicles With: 5-Speed Automatic Transaxle - JATCO - Transmission Fluid Level Check

General Procedures

1. Raise and support the vehicle. For additional information, refer to Section 100-02 Jacking and Lifting.
2. Connect the Jaguar Approved Diagnostic System.
3. Make sure J-Gate shift selector is in the Park position (P).
4. With the engine running and the foot brake applied, move the J-Gate shift selector through "P-R-N-D-4-3-2" and back to the "P" position to circulate the automatic transmission fluid until the temperature reaches 30 to 40°C (86 to 104°F) on the Jaguar Approved Diagnostic System.
5. When the automatic transmission fluid temperature reaches 35°C (95°F) check that the selector lever is in the "P" position raise the vehicle.
6. With the engine running, remove the automatic transmission fluid level tube plug.
   - Remove and discard the level plug and sealing washer.

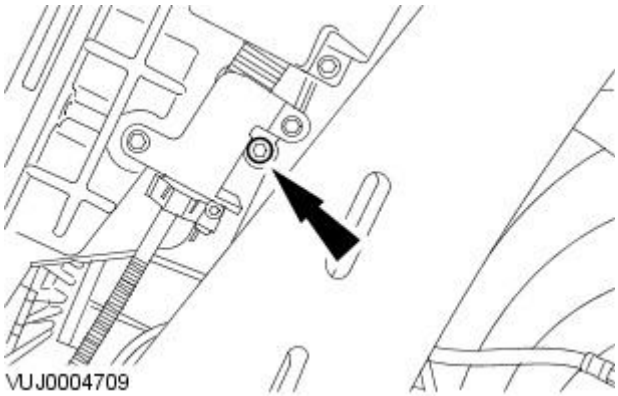

7. NOTE: Use automatic transmission fluid WSS-M2C922-A1 or equivalent meeting Jaguar specification.

   If the automatic transmission fluid does not come out of the transmission fluid level tube the automatic transmission fluid level is insufficient. If this is the case add the automatic transmission fluid in 0.5 litre units into the automatic transmission fluid charging pipe until the automatic transmission fluid comes out of the automatic transmission fluid level tube.
   - Remove the automatic transmission fluid charging pipe cap.

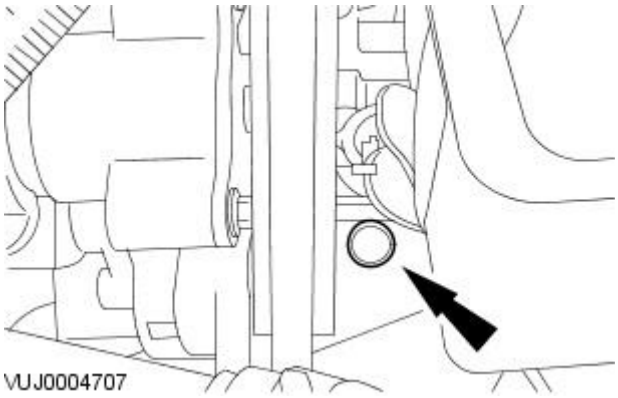

8. NOTE: Make sure the automatic transmission fluid temperature does not exceed 40°C (104°F). If the automatic transmission fluid temperature does exceed 40°C (104°F) stop the automatic transmission fluid level check and allow the automatic transmission fluid to cool until the temperature reaches 30 to 40°C (86 to 104°F).

   Allow the automatic transmission fluid to come out of the automatic transmission fluid level tube until the overflow stops at a temperature of no more than 40°C (104°F).
9. If when the automatic transmission fluid level plug is first removed and automatic transmission fluid comes out of the automatic transmission fluid level tube, allow the automatic transmission fluid to come out of the automatic transmission fluid level tube until the overflow stops at a temperature of no more than 40°C (104°F).
10. Install the transmission fluid level plug.
    - Install a new level plug and sealing washer.
    - Tighten to 15 Nm.

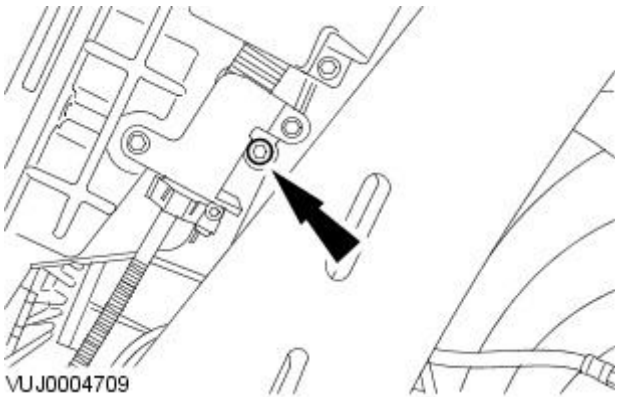

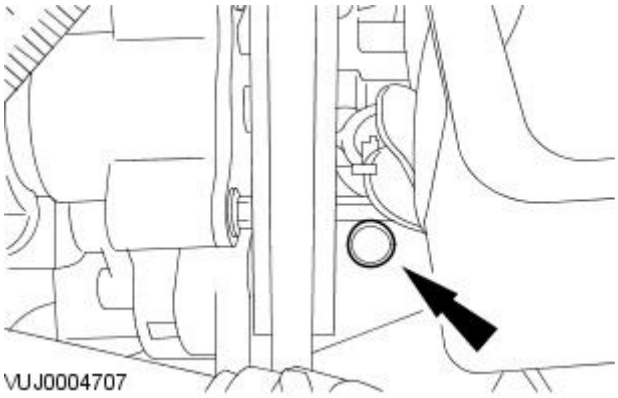

11. Install the automatic transmission fluid charging pipe cap.

12. Lower the vehicle.

13. Disconnect the Jaguar Approved Diagnostic System.

Automatic Transmission / Transaxle - Vehicles With: 5-Speed Automatic Transaxle - JATCO - Transmission Range (TR) Sensor Adjustment

General Procedures

Special Tool(s)	
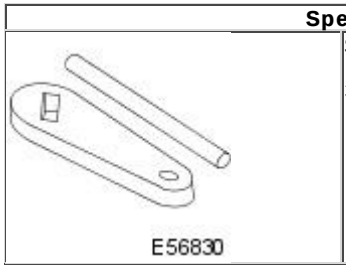	Setting plate rotary switch 307-445

1. Remove the battery tray.
   For additional information, refer to: Battery Tray (414-01 Battery, Mounting and Cables, Removal and Installation).
2. Loosen the Transmission Range (TR) sensor.

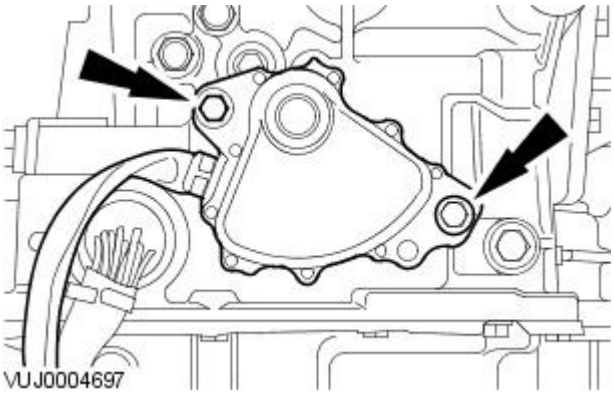

3. Make sure the J-Gate shift selector is in the "N" position.
4. Using the special tool adjust the TR sensor.
   - Tighten to 10 Nm.

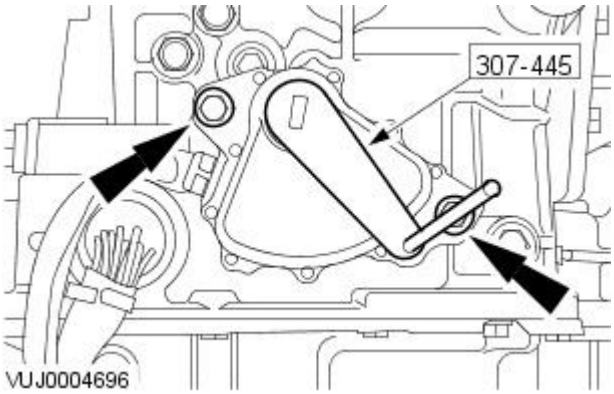

5. Remove the special tool.
6. Install the battery tray.
   For additional information, refer to: Battery Tray (414-01 Battery, Mounting and Cables, Removal and Installation).
7. NOTE: If the J-Gate shift selector does not illuminate in all positions repeat the complete procedure.

   Make sure the vehicle starts in the "P" and "N" positions and that it does not start in the R, D, 4, 3 and 2 positions, and that the J-Gate shift selector illuminates in all positions.

Automatic Transmission / Transaxle - Vehicles With: 5-Speed Automatic Transaxle - JATCO - Halfshaft Seal LH

In-vehicle Repair

Special Tool(s)	
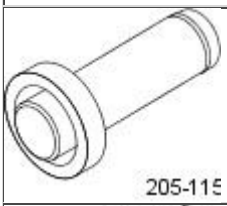 205-115	Link shaft oil seal installer 205-115
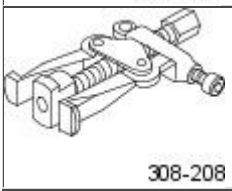 308-208	Pinion oil seal remover 308-208

Removal

1. Drain the transmission. For additional information, refer to Transmission Fluid Drain and Refill.
2. Remove the left-hand drive halfshaft. For additional information, refer to Section 205-04 Front Drive Halfshafts.
3. Using the special tool, remove the drive halfshaft oil seal.

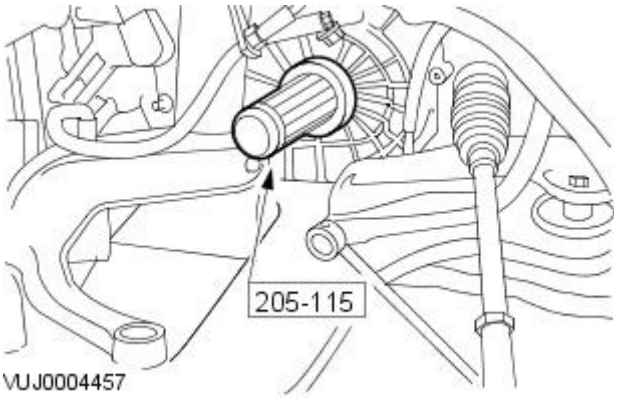

Installation

1. Using the special tool, install the drive halfshaft oil seal.

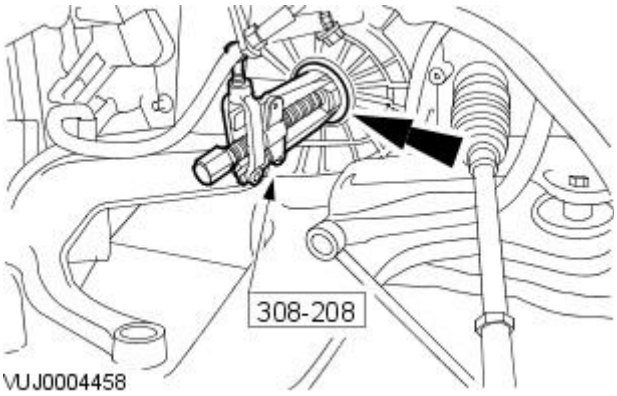

2. Install the left-hand drive halfshaft. For additional information, refer to Section 205-04 Front Drive Halfshafts.
3. Fill the transmission. For additional information, refer to Transmission Fluid Drain and Refill

Automatic Transmission / Transaxle - Vehicles With: 5-Speed Automatic Transaxle - JATCO - Halfshaft Seal RH

In-vehicle Repair

Special Tool(s)	
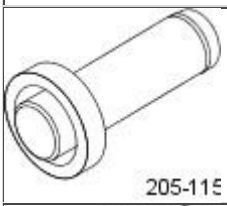	Linkshaft oil seal installer 205-115
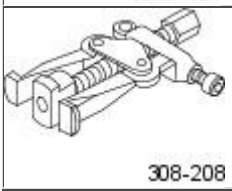	Pinion oil seal remover 308-208

1. Drain the transmission.
   For additional information, refer to Transmission Fluid Drain and Refill in this section.
2. Remove the intermediate shaft.
   For additional information, refer to Section 205-04 Front Drive Halfshafts.

Removal

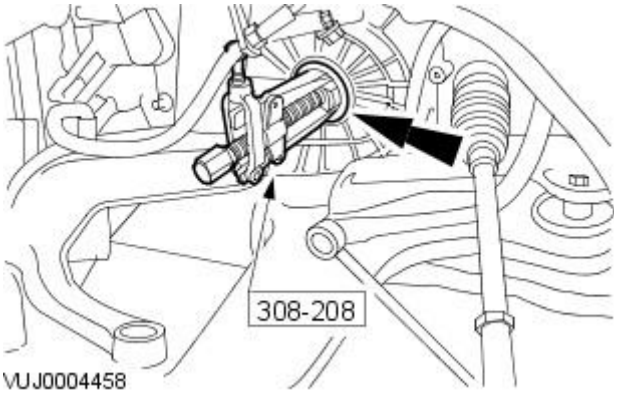

1. NOTE: Left-hand shown, right-hand similar.

   Using the special tool, remove the halfshaft oil seal.

Installation

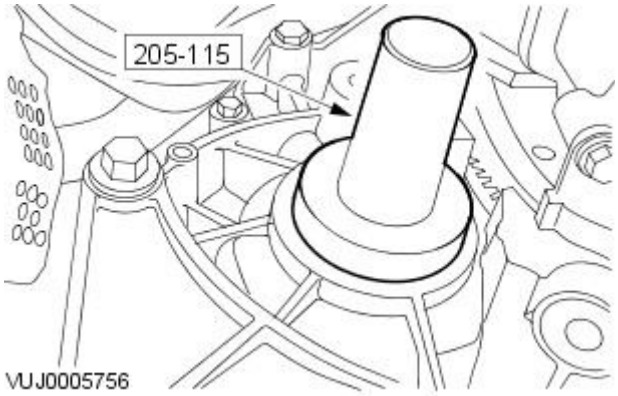

1. Using the special tool install, the halfshaft oil seal.
2. Install the intermediate shaft.
   For additional information, refer to Section 205-04 Front Drive Halfshafts.
3. Refill the transmission.
   For additional information, refer to Transmission Fluid Drain and Refill in this section.

Automatic Transmission / Transaxle - Vehicles With: 5-Speed Automatic Transaxle - JATCO - Main Control Valve Body

In-vehicle Repair

Removal

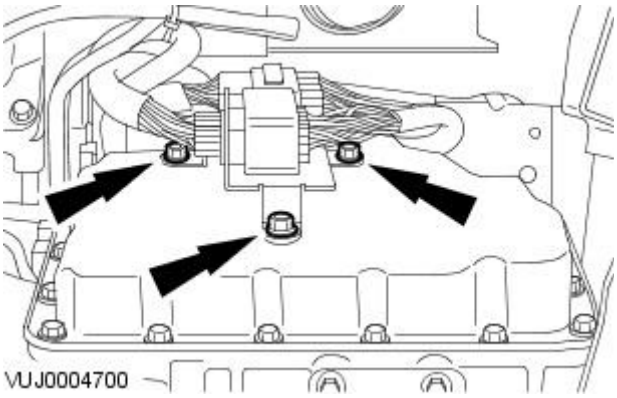

1. Detach the wiring harness.

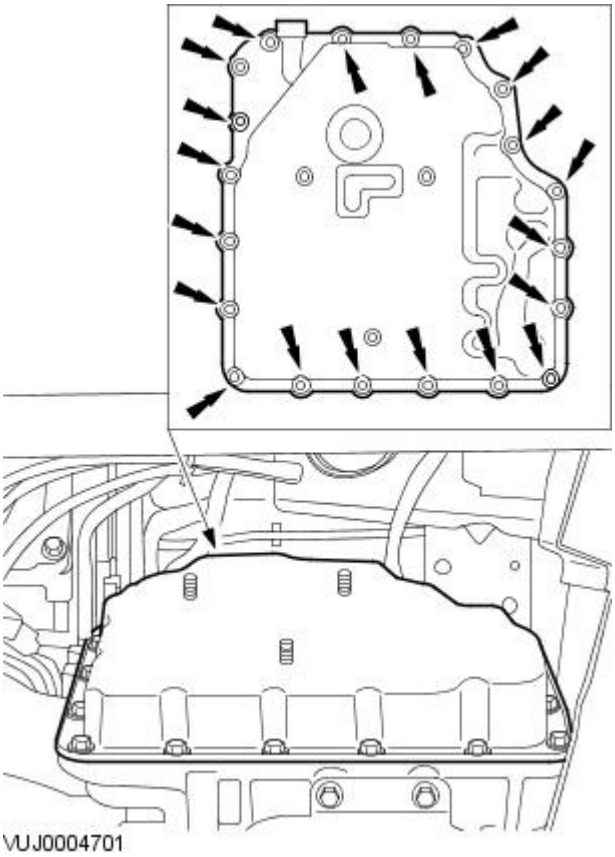

2. Remove the main valve body cover.

- Drain the transmission fluid into a suitable container.
- Clean and inspect the main valve body cover and transmission sealing surfaces using Metal surface cleaner WSE-M5B392-A or equivalent meeting Jaguar specification.

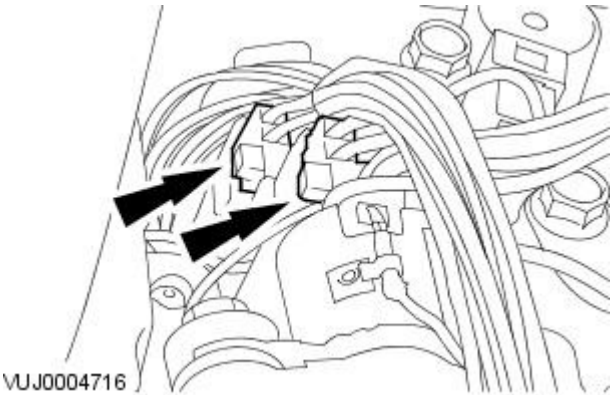

3. Disconnect the electrical connectors.

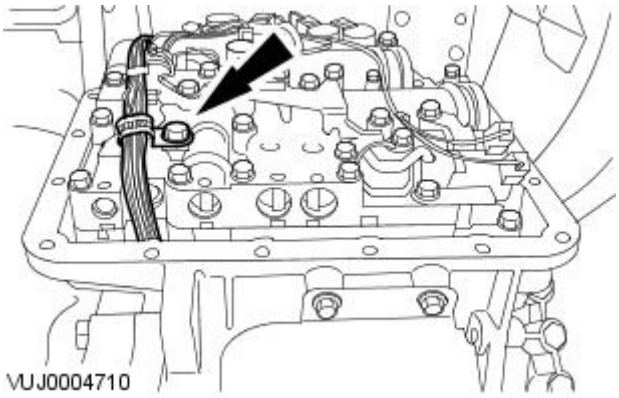

4. Detach the wiring harness.

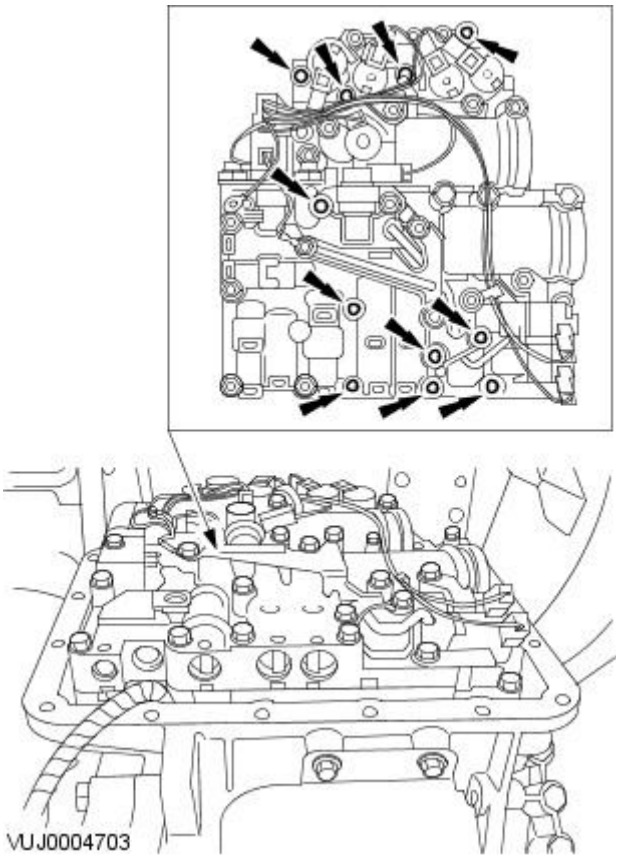

5. Remove the main control valve body.

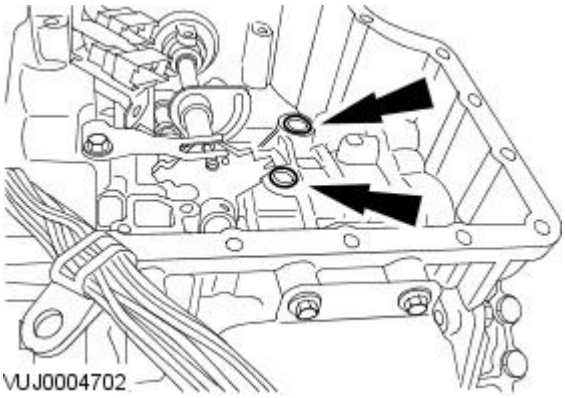

6. Remove and discard the O-ring seals.

Installation

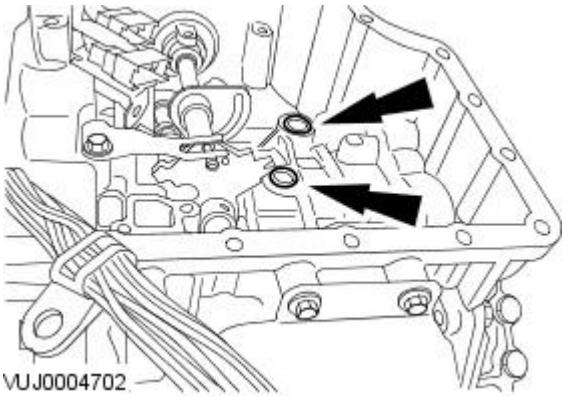

1. To install, reverse the removal procedure.

- Install the new O-ring seals.

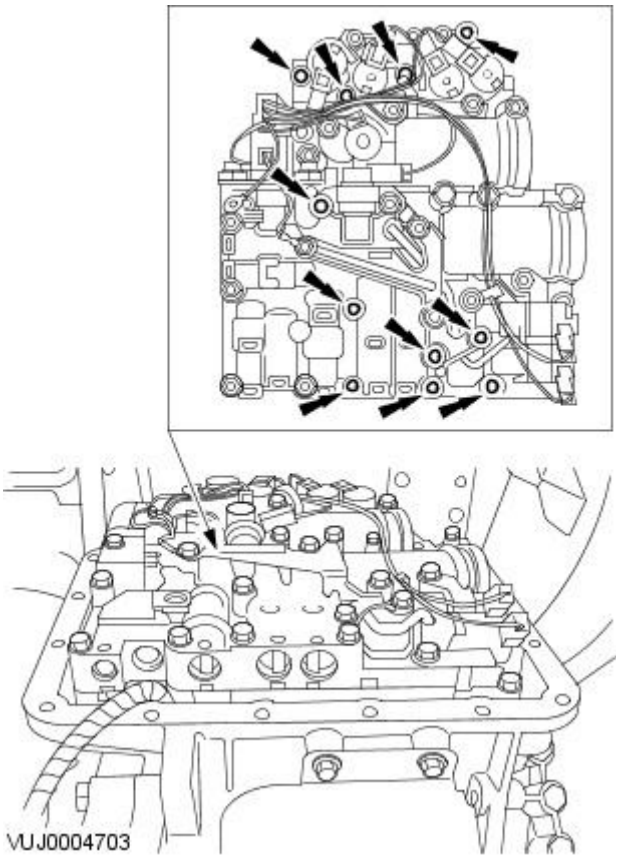

2. To install, reverse the removal procedure.

- Tighten to 8 Nm.

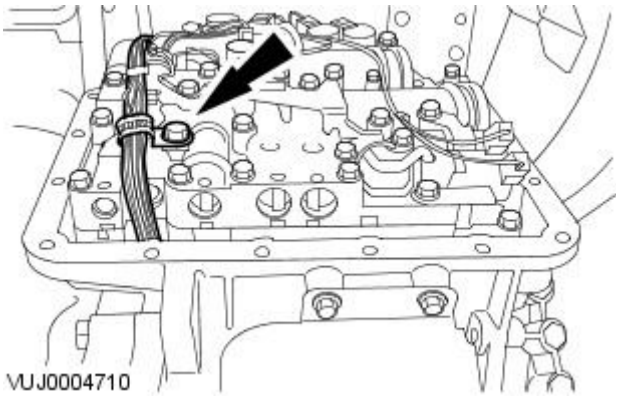

3. Tighten to 8 Nm.

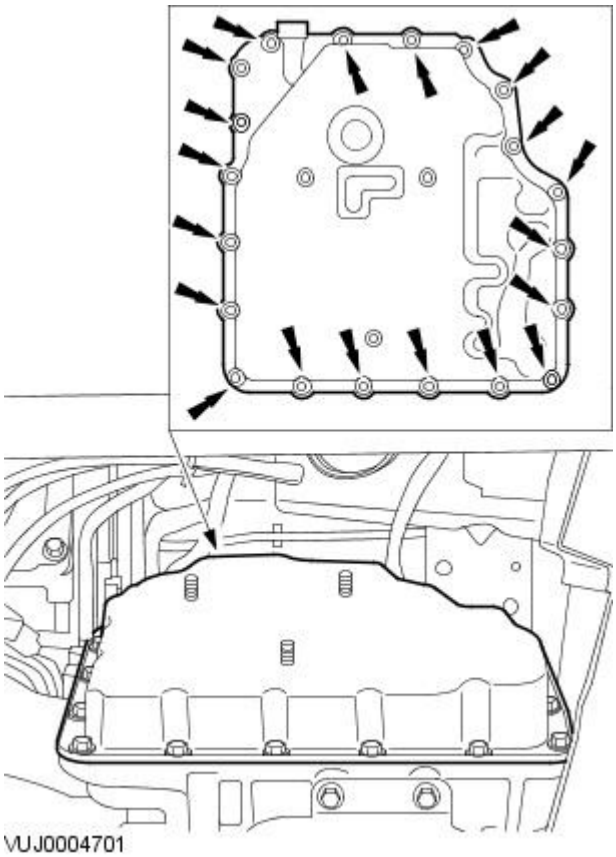

4. NOTE: Apply an even bead of silicone gasket sealant WSE-M4G323-A6 or equivalent meeting Jaguar specification to the main valve body cover sealing surface.

Tighten to 8 Nm.

5. Check and adjust the transmission fluid level. For additional information, refer to Adjustment—Fluid Level Check.

Automatic Transmission / Transaxle - Vehicles With: 5-Speed Automatic Transaxle - JATCO - Shift Solenoids (SS)

In-vehicle Repair

Removal

1. Remove the main control valve body. For additional information, refer to Main Control Valve Body.
2. Disconnect the electrical connector.

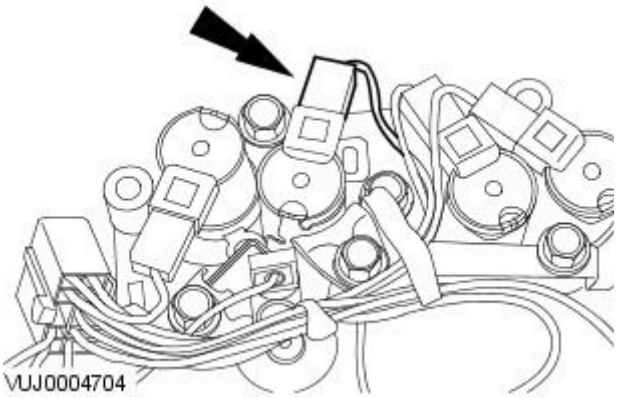

3. Remove the shift solenoid.

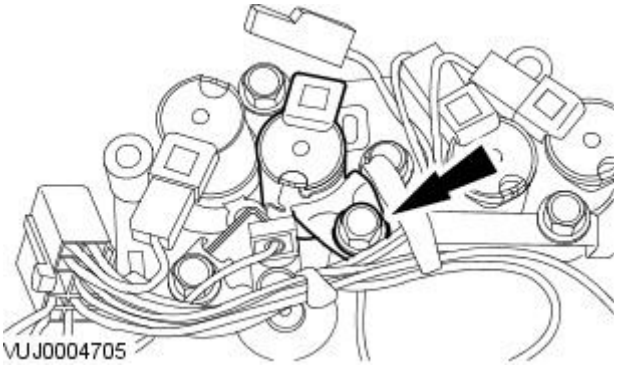

Installation

1. NOTE: Lubricate the shift solenoid O-ring seal with automatic transmission fluid WSS-M2C922-A1 or equivalent meeting Jaguar specification.

   To install, reverse the removal procedure.

   - Lubricate the shift solenoid O-ring seal.

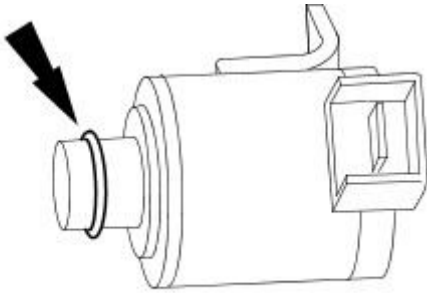

2. Tighten to 8 Nm.

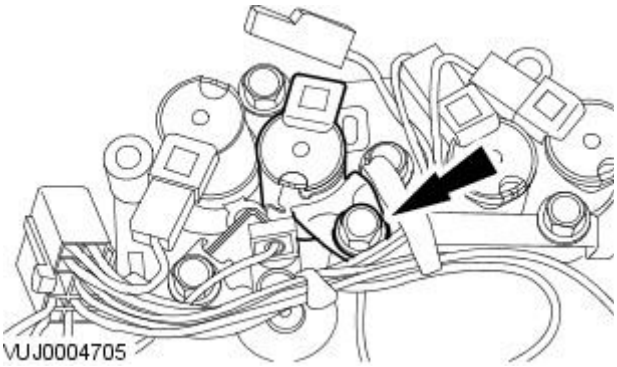

3. Install the main control valve body. For additional information, refer to Main Control Valve Body.

Automatic Transmission / Transaxle - Vehicles With: 5-Speed Automatic Transaxle - JATCO - Transaxle Support Insulator

In-vehicle Repair

Special Tool(s)	
	Powertrain assembly jack HTJ1200-2

Removal

1. Raise and support the vehicle. For additional information, refer to Section 100-02 Jacking and Lifting.
2. Install the special tool.

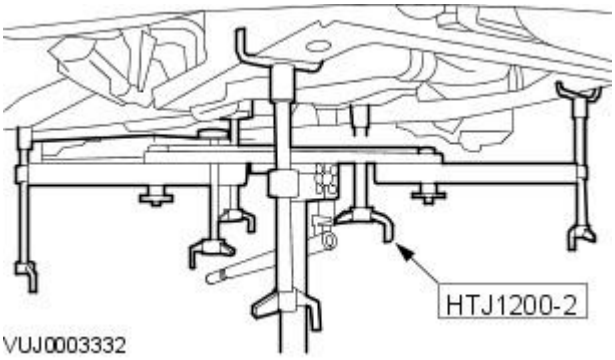

3. NOTE: Left-hand shown, right-hand similar.

   Position and adjust the special tool rear height adjuster.

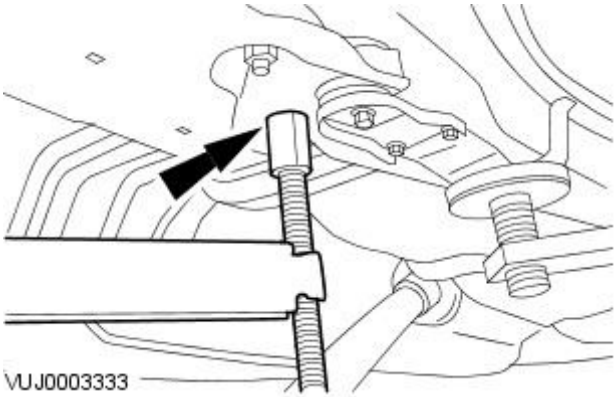

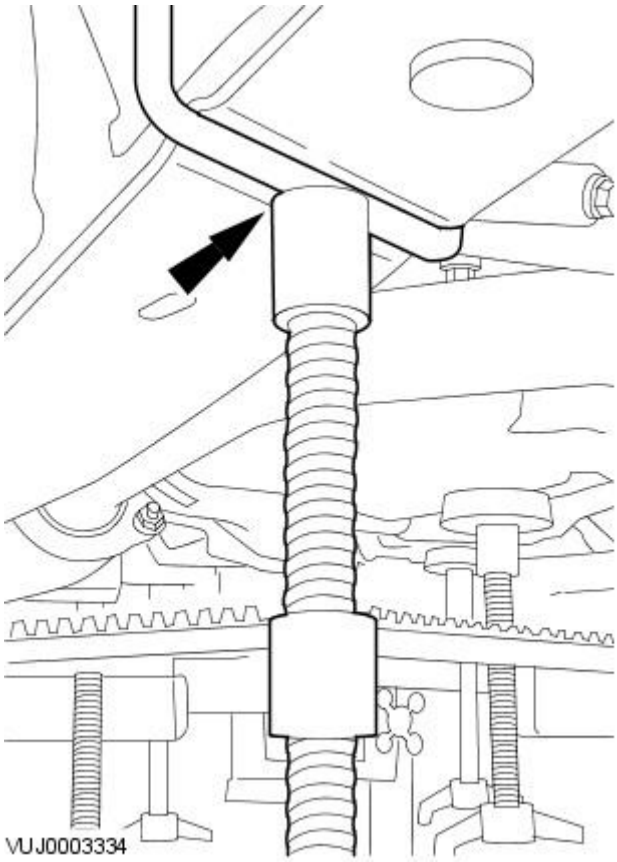

4. NOTE: Right-hand shown, left-hand similar.

Position and adjust the special tool front height adjuster.

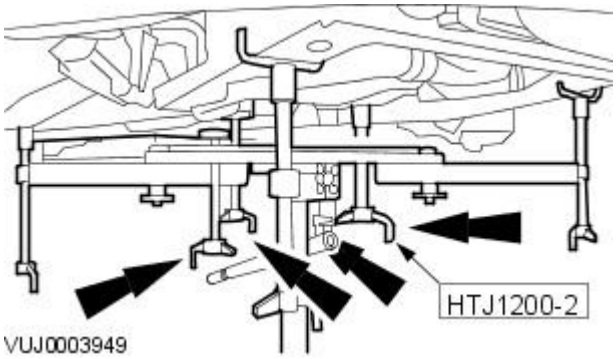

5. Position and adjust the special tool engine height adjusters.

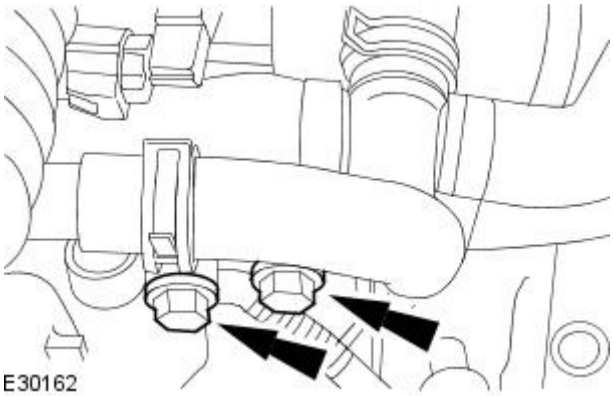

6. Detach the support bar.

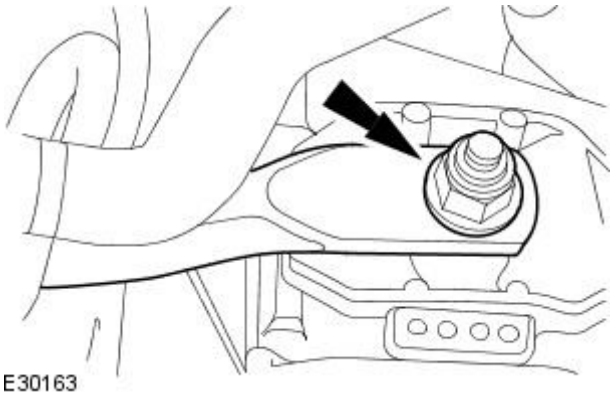

7. Remove the support bar.

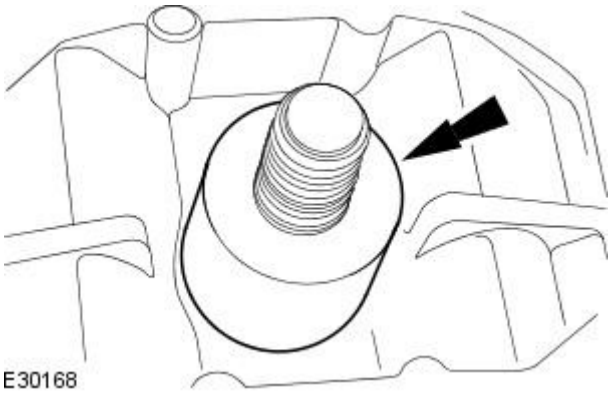

8. Remove the spacer.

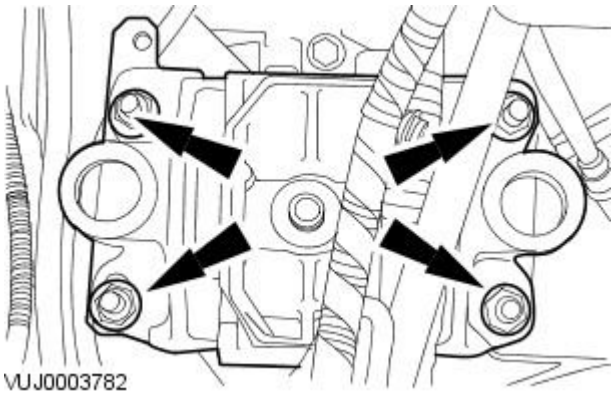

9. Remove the transaxle support insulator.

- Remove the transaxle support insulator retaining nuts.

Installation

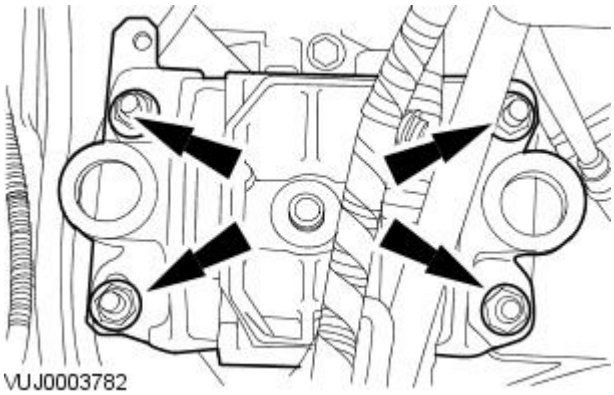

1. To install, reverse the removal procedure.

- Tighten to 47 Nm.

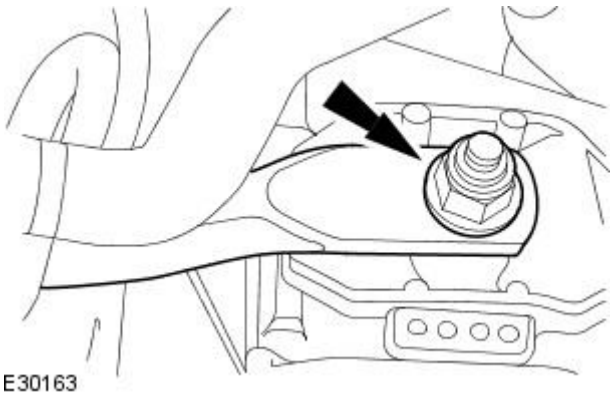

2. Tighten to 133 Nm.

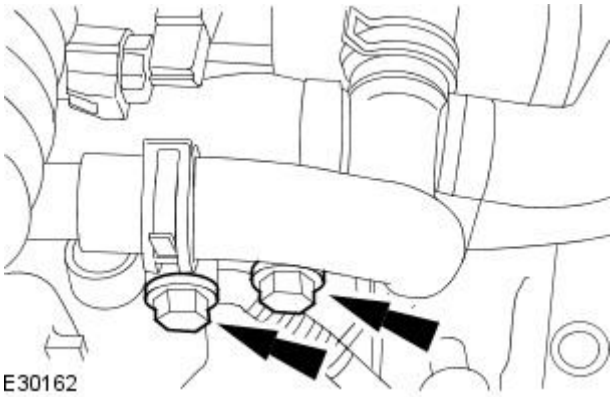

3. Tighten to 25 Nm.

Automatic Transmission / Transaxle - Vehicles With: 5-Speed Automatic Transaxle - JATCO - Transmission Control Module (TCM)

In-vehicle Repair

Removal

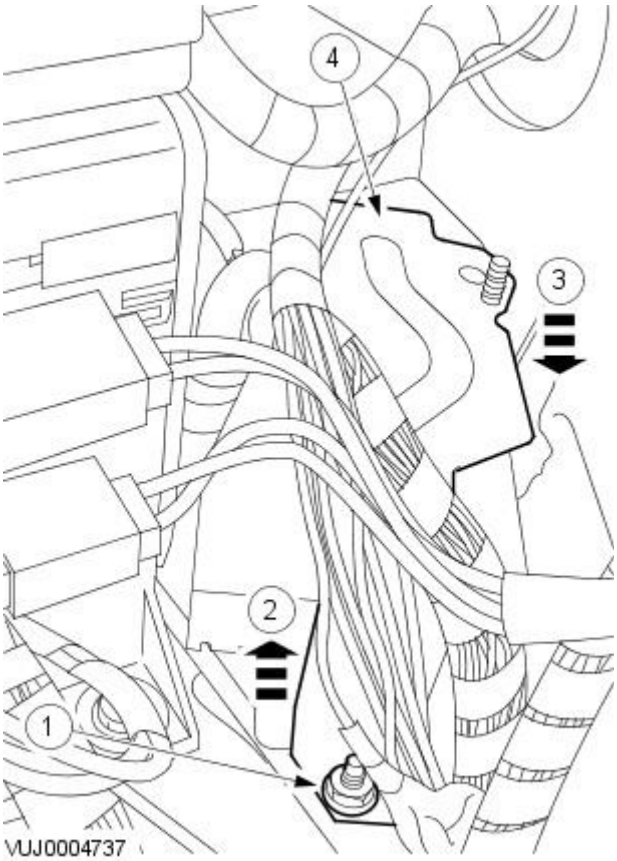

1. Remove the rain sensor module. For additional information, refer to Section 501-16 Wipers and Washers.
2. Remove the mounting plate.
    1. Remove the retaining nut.
    2. Reposition the mounting plate.
    3. Detach the mounting plate.
    4. Remove the mounting plate.

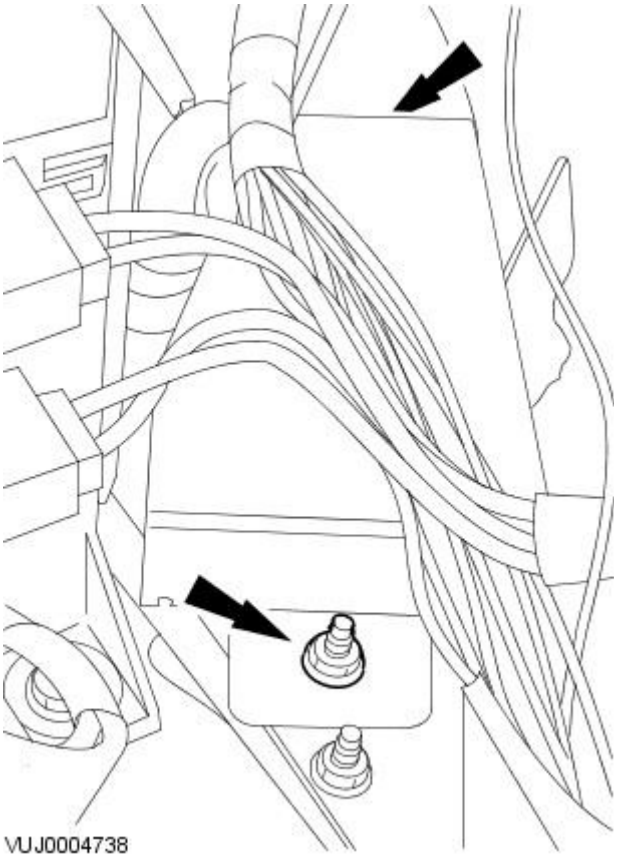

3. Detach the Transmission Control Module (TCM).

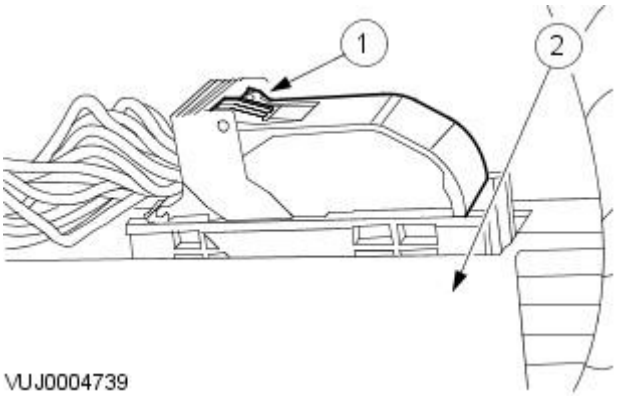

4. Remove the TCM.

1. Disconnect the electrical connector.
2. Remove the TCM.

Installation

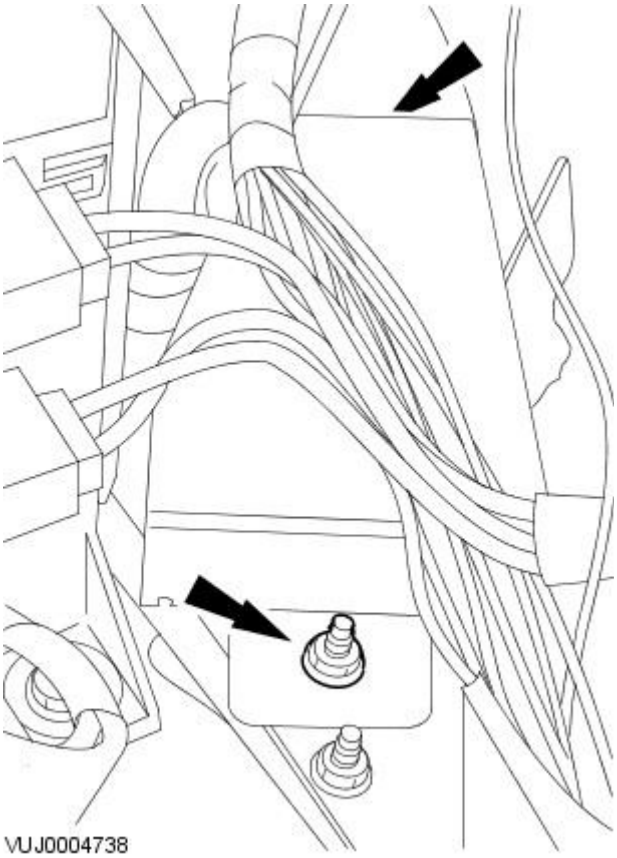

1. To install, reverse the removal procedure.

- Tighten to 10 Nm.

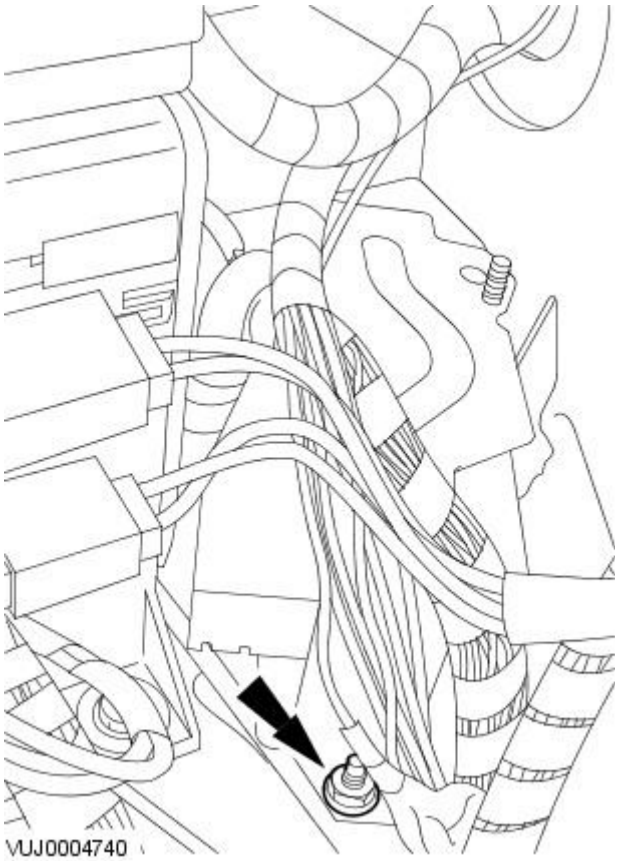

2. Tighten to 10 Nm.

Automatic Transmission / Transaxle - Vehicles With: 5-Speed Automatic Transaxle - JATCO - Transmission Range (TR) Sensor

In-vehicle Repair

Removal

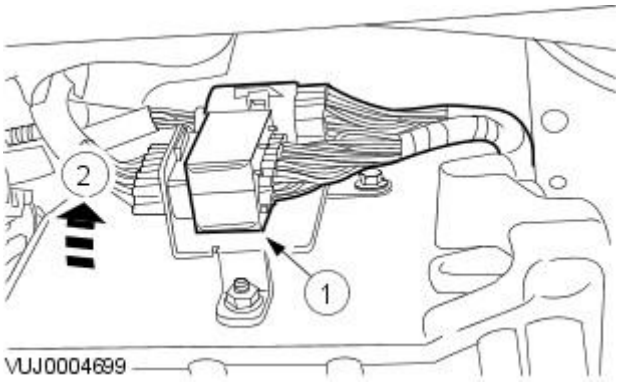

1. Remove the battery tray. For additional information, refer to Section 414-01 Battery, Mounting and Cables.
2. Disconnect the electrical connector.
    1. Detach the electrical connector.
    2. Disconnect the electrical connector.

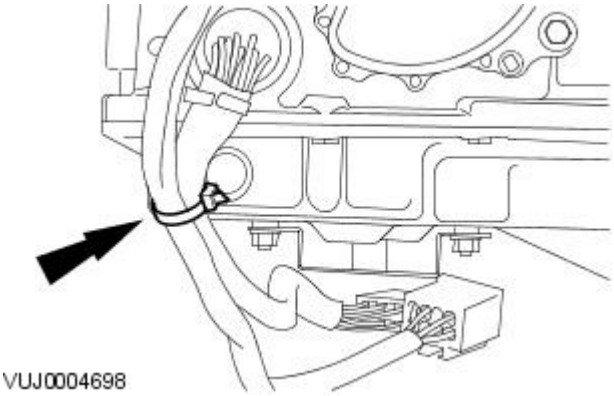

3. Remove the tie strap.

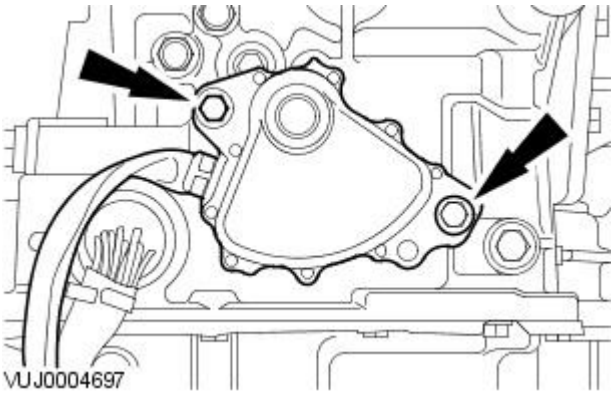

4. Remove the Transmission Range (TR) sensor.

Installation

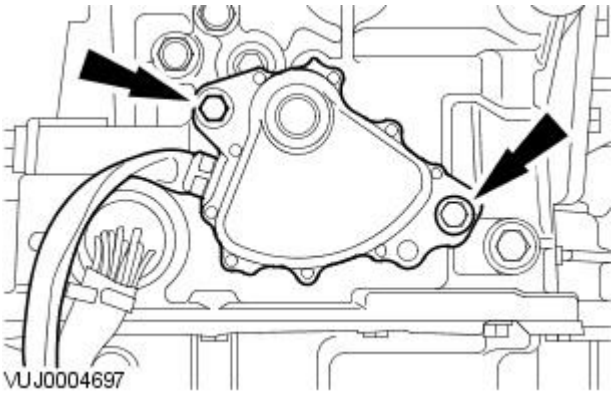

1. Install the TR sensor.
2. Adjust the TR sensor. For additional information, refer to Adjustment —Transmission Range (TR) Sensor.

Automatic Transmission / Transaxle - Vehicles With: 5-Speed Automatic Transaxle - JATCO - Transaxle

Removal

Special Tool(s)	
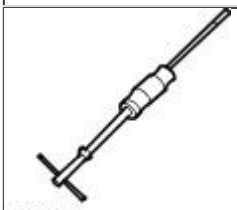 100012	Slide hammer 100-012
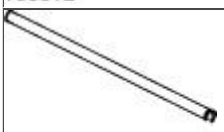 100-012-02	100-012-02 Slide hammer shaft
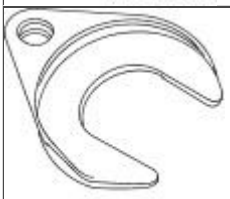 204-226	Halfshaft remover fork 204-226
HTJ12002	Powertrain assembly jack HTJ1200-2
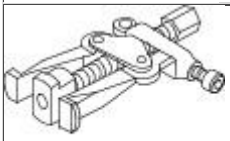 308-208	Pinion oil seal remover 308-208
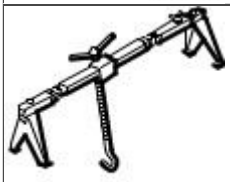 303-021	Engine support bracket 303-021
E46047	Engine support brackets 303-1068
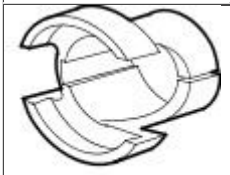 310044	Disconnect tool, fuel line 310-044

Removal

All vehicles

1. Remove the battery tray.
   For additional information, refer to: Battery Tray (414-01 Battery, Mounting and Cables, Removal and Installation).
2. Remove the air cleaner.
   For additional information, refer to: Air Cleaner (303-12A Intake Air Distribution and Filtering - 2.0L NA V6 - AJV6/2.5L NA V6 - AJV6/3.0L NA V6 - AJ27, Removal and Installation).

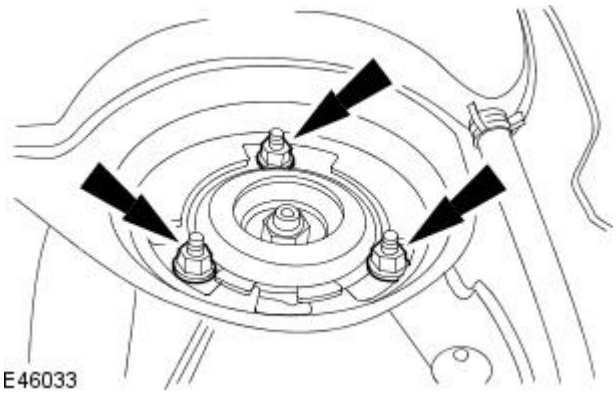

3. Loosen the left-hand shock absorber and spring assembly securing nuts.

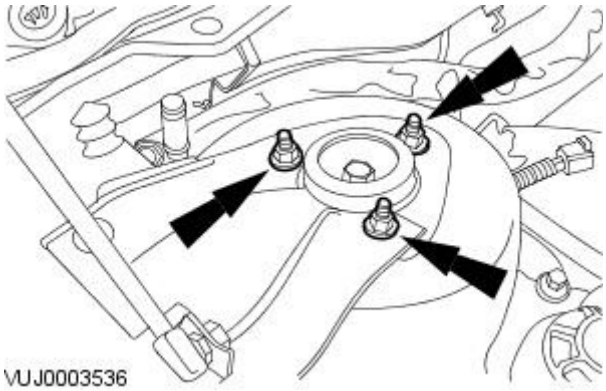

4. Loosen the right-hand shock absorber and spring assembly securing nuts.

5. Remove the front subframe.
For additional information, refer to: Front Subframe - 2.0L NA V6 - AJV6/2.5L NA V6 - AJV6/3.0L NA V6 - AJ27 (502-00 Uni-Body, Subframe and Mounting System, Removal and Installation).

6. Remove the fender splash shield access panel.

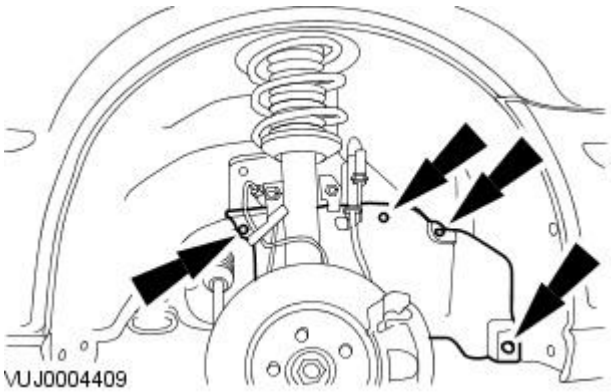

Vehicles with 2.5L or 3.0L engine

7. Remove the steering gear heat shield bracket.

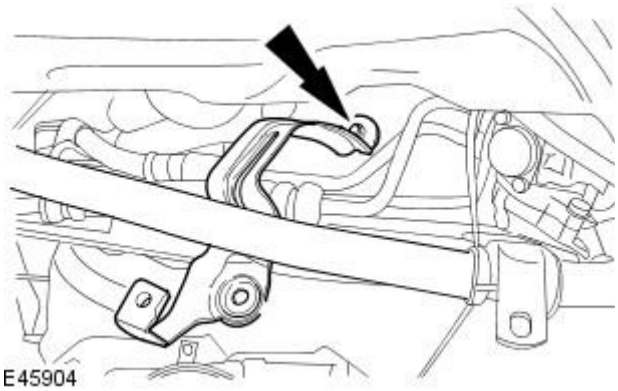

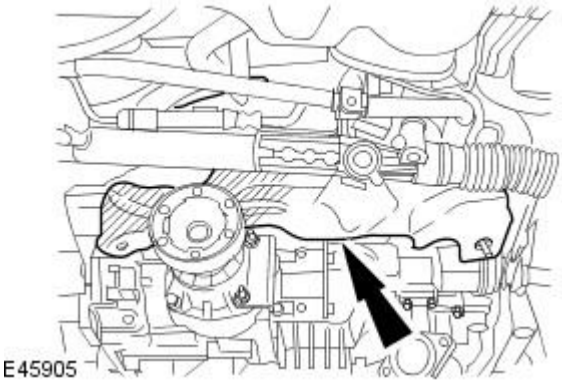

8. Remove the steering gear heat shield.

9. Remove the transfer case.
For additional information, refer to: Transfer Case (308-07 Transfer Case, Removal).

Vehicles with 2.0L engine

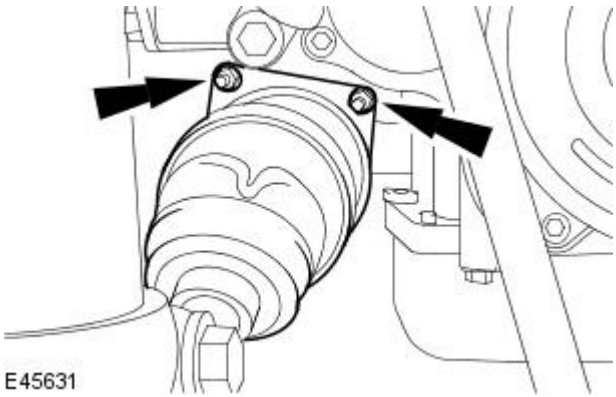

10. CAUTION: Make sure the halfshaft constant velocity (CV) joints do not over articulate. Failure to follow this instruction may result in damage to the CV joints.

Detach the right-hand halfshaft.

- Disengage the right-hand halfshaft from the transaxle.
- Secure the right-hand halfshaft to one side.

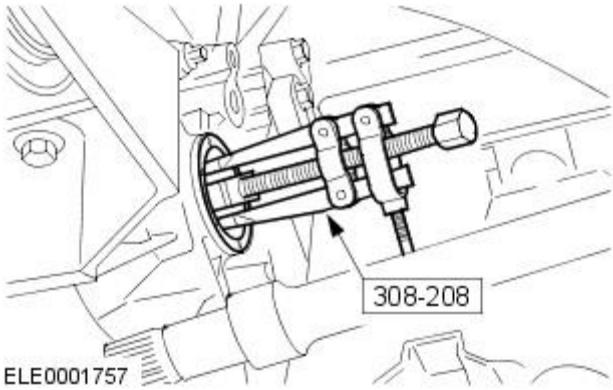

11. NOTE: Plug the transaxle to prevent fluid loss or dirt ingress.

Using the special tool, remove the right-hand halfshaft seal.

All vehicles

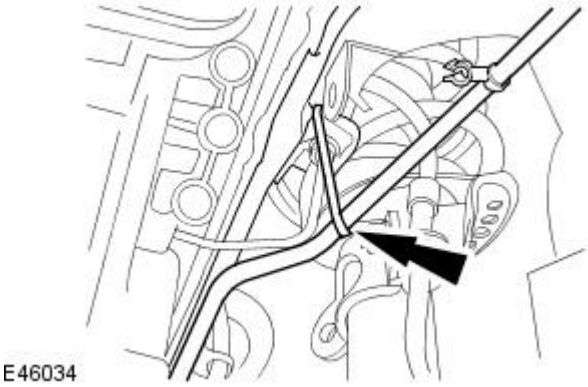

12. Support the power steering fluid pipe.

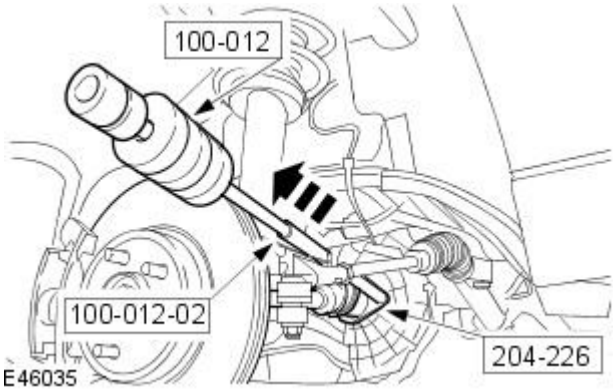

13. NOTE: Plug the transaxle to prevent fluid loss or dirt ingress.

Using the special tools, detach the left-hand halfshaft.

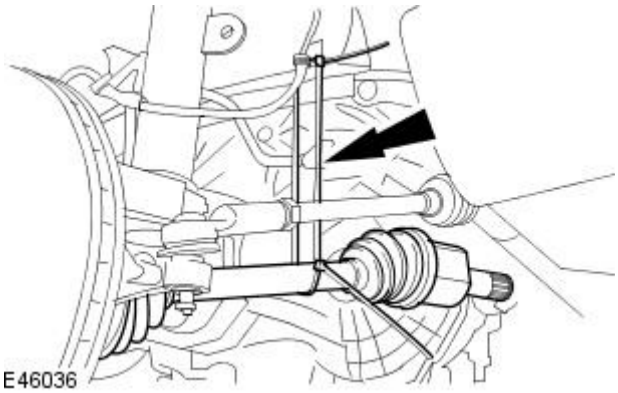

14. CAUTION: Make sure the halfshaft constant velocity (CV) joints do not over articulate. Failure to follow this instruction may result in damage to the CV joints.

Support the left-hand halfshaft.

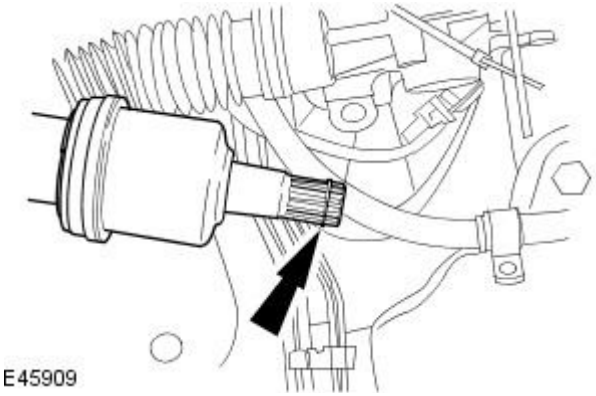

15. Remove and discard the halfshaft snap ring.

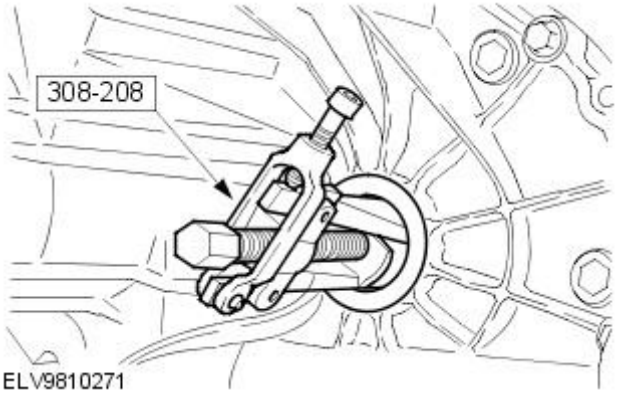

16. NOTE: Plug the transaxle to prevent fluid loss or dirt ingress.

Using the special tool, remove the halfshaft seal.

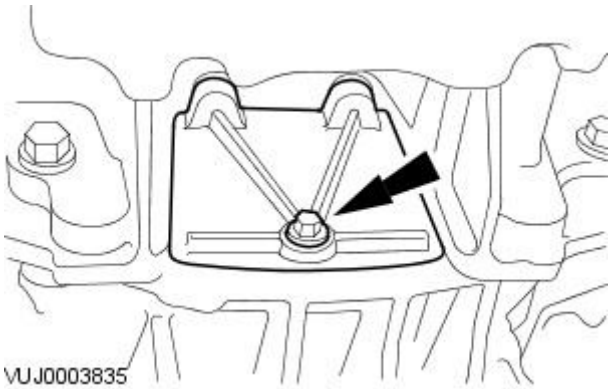

17. Remove the torque converter retaining bolts access cover.

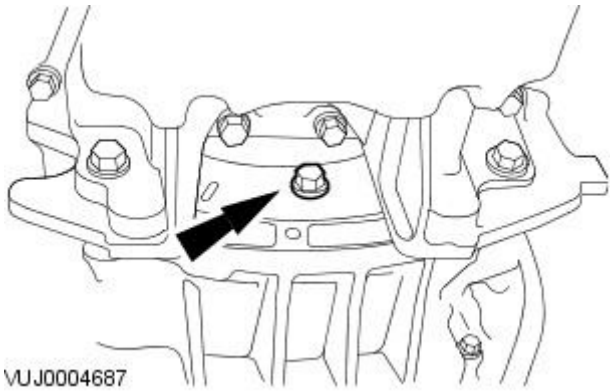

18. NOTE: Rotate the torque converter to gain access for the remaining retaining bolts.

Remove the torque converter retaining bolts.

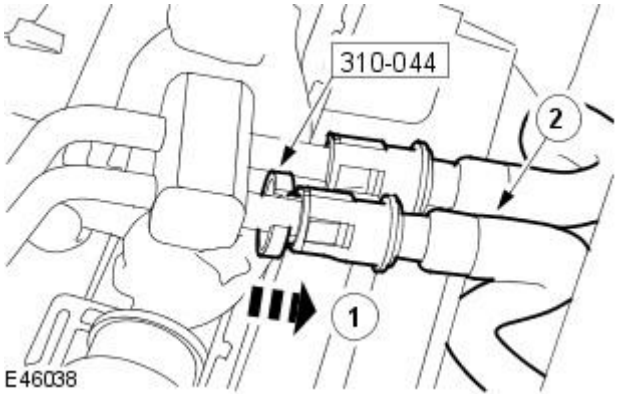

19. NOTE: Lower transaxle fluid cooler tube shown, upper transaxle fluid cooler tube similar.

• NOTE: Plug the transaxle fluid cooler and transaxle fluid cooler tubes to prevent fluid loss or dirt ingress.

Using the special tool, detach the transaxle fluid cooler tubes.

1. Install the special tool to the transaxle fluid cooler tube.
2. Using the special tool, detach the transaxle fluid cooler tube.

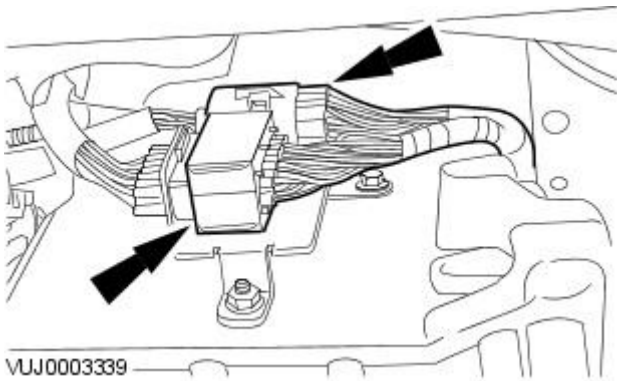

20. Disconnect the transaxle electrical connectors.

21. Lower the vehicle.

22. Detach the generator wiring harness retaining clip from the camshaft cover retaining clip.

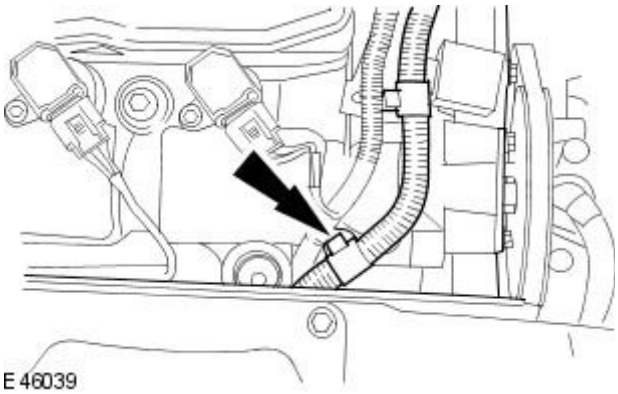

23. Remove the air cleaner mount bracket.

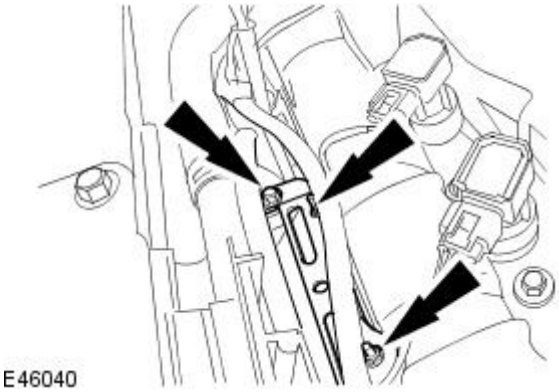

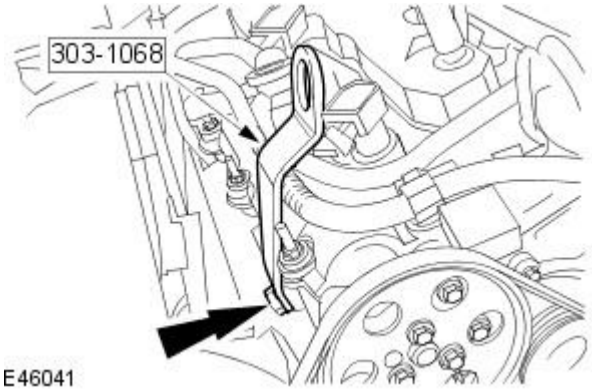

24. Install the engine support bracket.

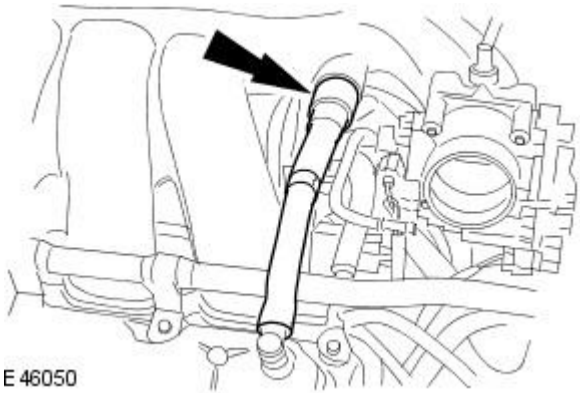

25. Detach the positive crankcase ventilation (PCV) hose from the intake manifold.

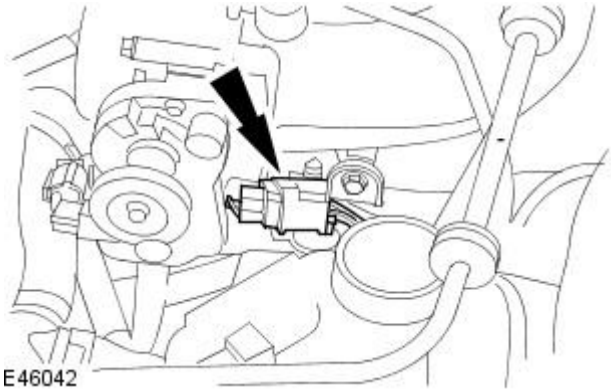

26. Detach the electrical connector from the intake manifold support bracket.

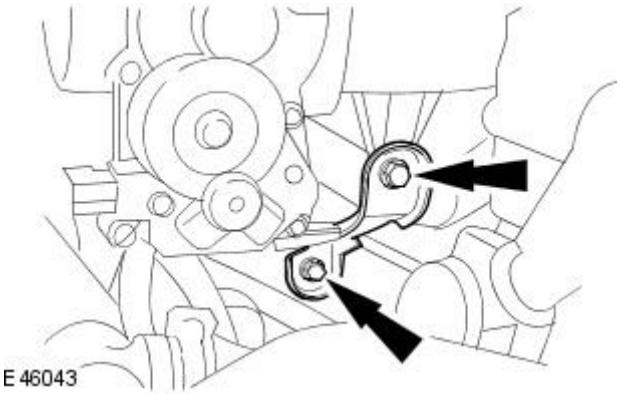

27. Remove the intake manifold support bracket.

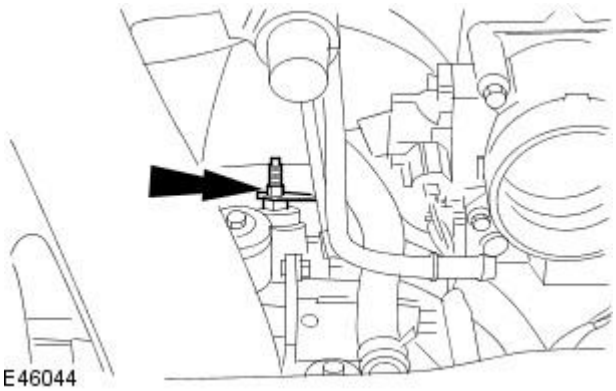

28. Detach the wiring harness from the camshaft cover retaining stud.

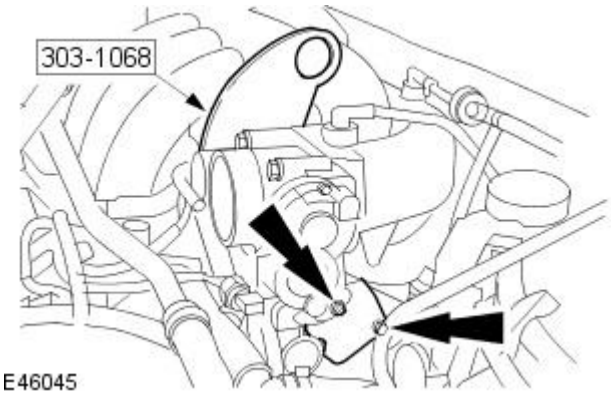

29. Install the engine support bracket.

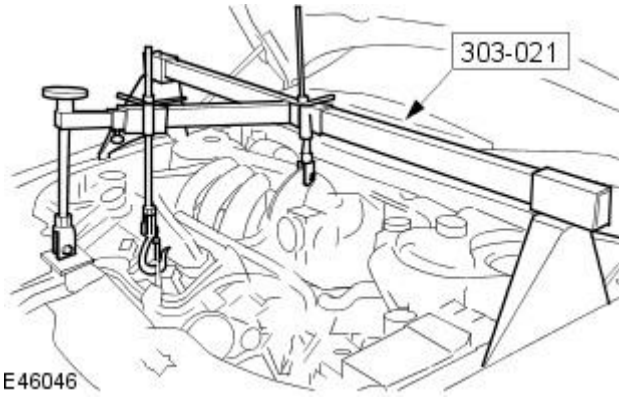

30. Install the engine support bracket.

- Adjust the engine support bracket to support the weight of the powertrain assembly.

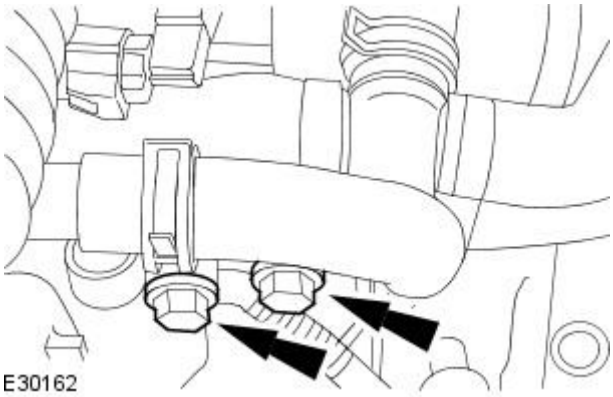

31. Remove the support bar retaining bolts.

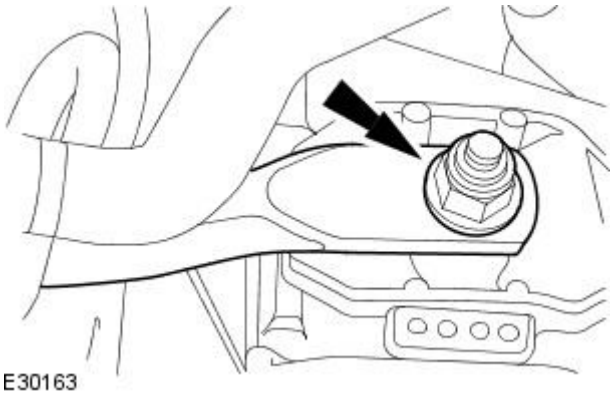

32. Remove the support insulator bar.

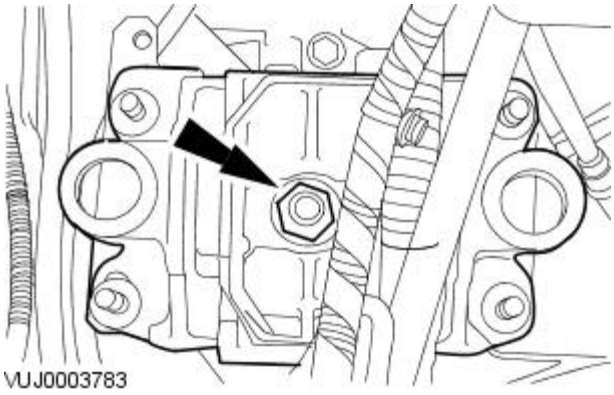

33. Install the support insulator retaining nut.

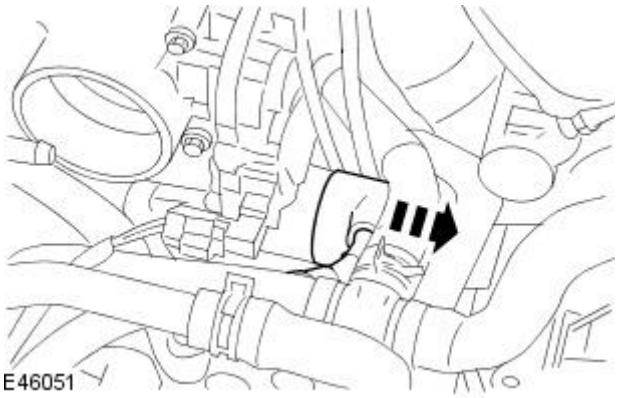

34. Detach the starter motor solenoid cover.

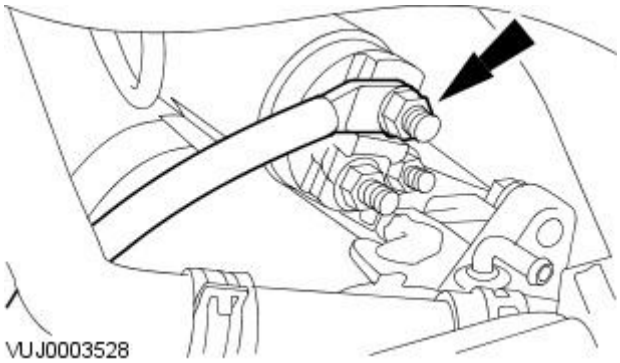

35. Detach the starter motor electrical connector.

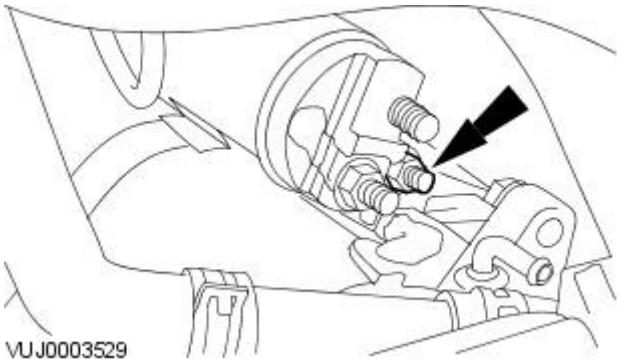

36. Detach the starter motor solenoid electrical connector.

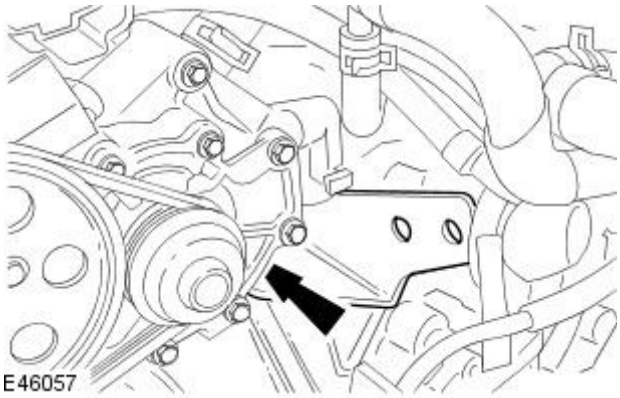

37. Remove the support bar mount bracket/transaxle upper retaining bolt.

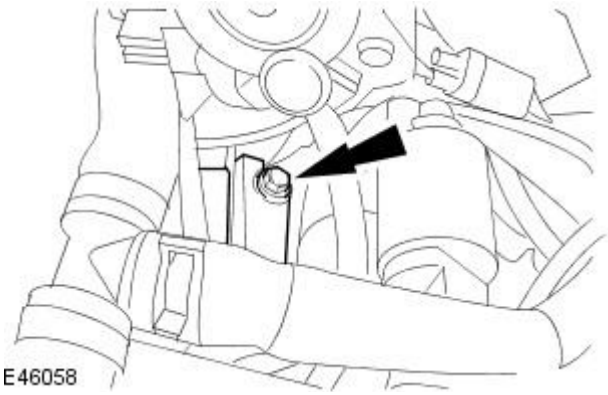

38. Remove the support bar mount bracket.

- Remove the stater motor front retaining bolt.

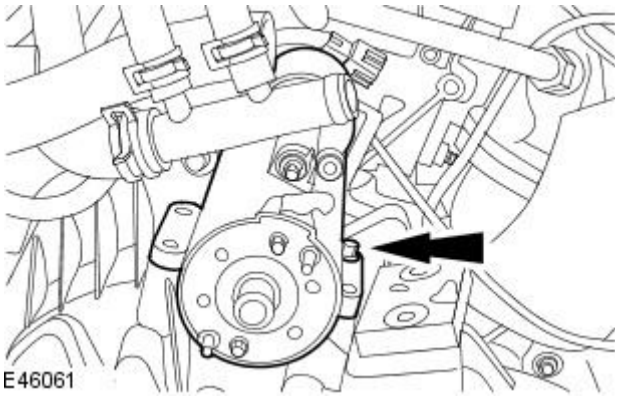

39. Remove the starter motor.

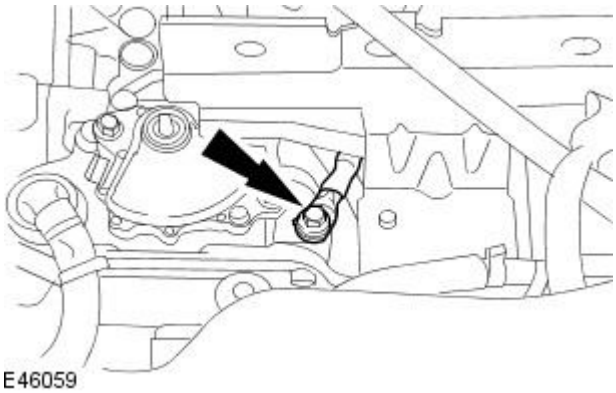

40. Detach the transaxle ground lead.

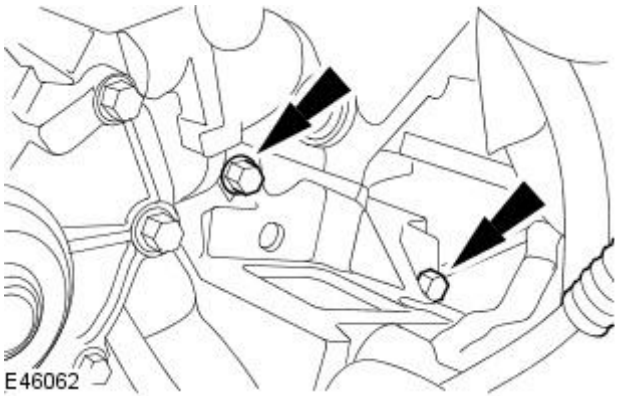

41. Remove the transaxle retaining bolts.

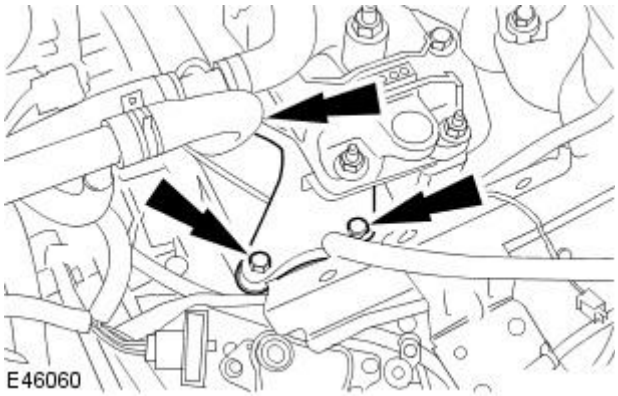

42. Remove the transaxle mount bracket securing bolts.

43. Raise the vehicle.

44. NOTE: The transaxle retaining bolt remains captive to the cylinder block flange.

Remove the transaxle retaining nut.

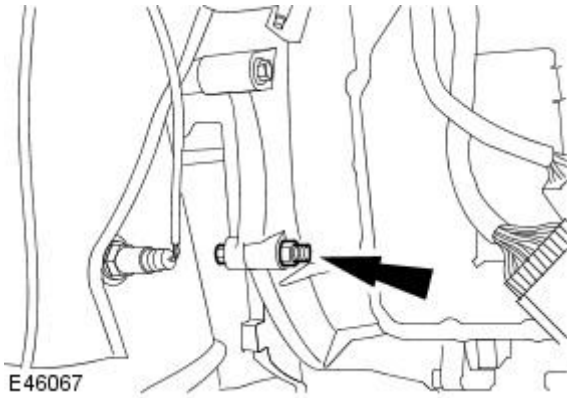

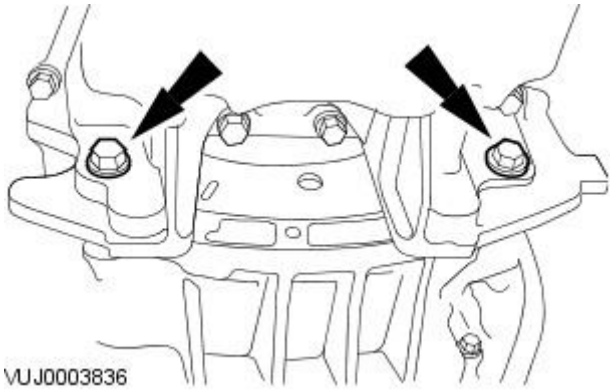

45. Remove the transaxle retaining bolts.

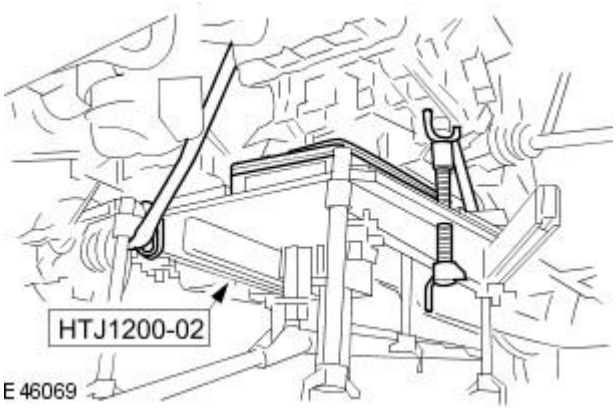

46. Align the powertrain assembly jack to the transaxle.

- Secure the transaxle to the powertrain assembly jack.

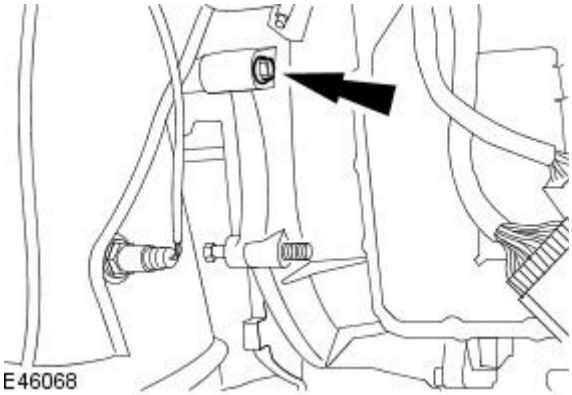

47. Remove the transaxle retaining bolt.

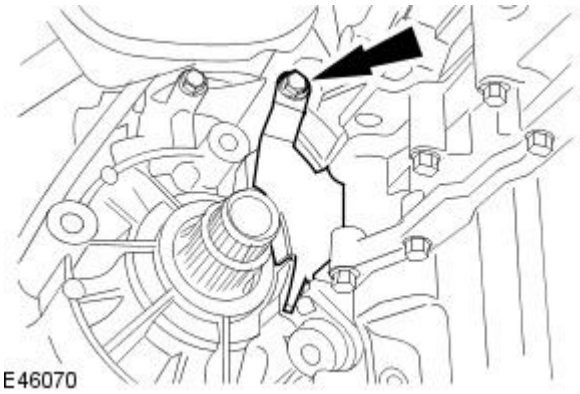

48. NOTE: Carry this step if an early condition transaxle is being removed.

• NOTE: Vehicles with 2.5L and 3.0L engines shown, vehicles with 2.0L engine similar.

Remove the transaxle retaining bolt

- Remove the transaxle dust cover.

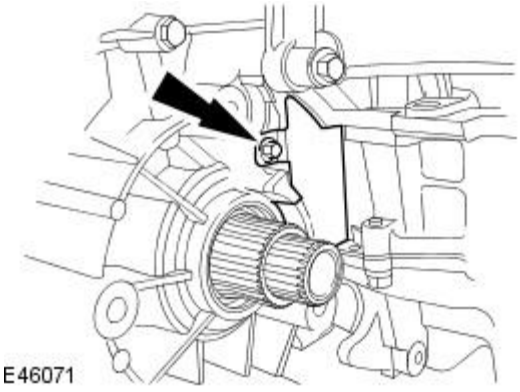

49. NOTE: Carry this step if a later condition transaxle is being removed.

• NOTE: Vehicles with 2.5L and 3.0L engines shown, vehicles with 2.0L engine similar.

Remove the transaxle dust cover.

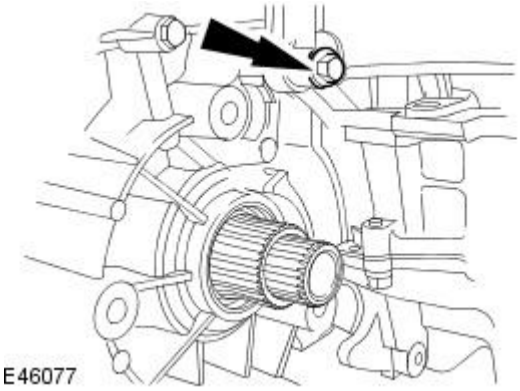

50. NOTE: Carry this step if a later condition transaxle is being removed.

• NOTE: Vehicles with 2.5L and 3.0L engines shown, vehicles with 2.0L engine similar.

Remove the transaxle retaining bolt.

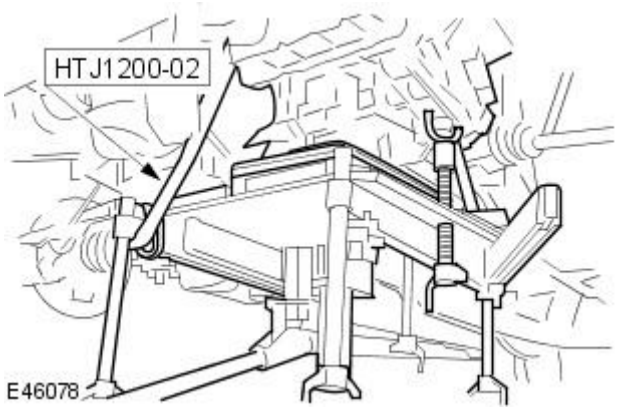

51. WARNING: Do not let the torque converter drop out of the transaxle. Failure to follow this instruction may result in personal injury.

Remove the transaxle.

- Detach the transaxle from the drive plate.
- Lower the powertrain assembly jack and transaxle assembly.

Automatic Transmission / Transaxle - Vehicles With: 5-Speed Automatic Transaxle - JATCO - Input Shaft Seal

Disassembly and Assembly of Subassemblies

Special Tool(s)	
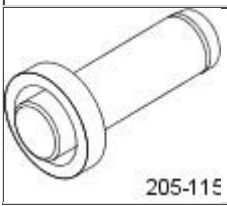	Link shaft oil seal installer 205-115

1. Remove the transmission assembly. For additional information, refer to Transmission.

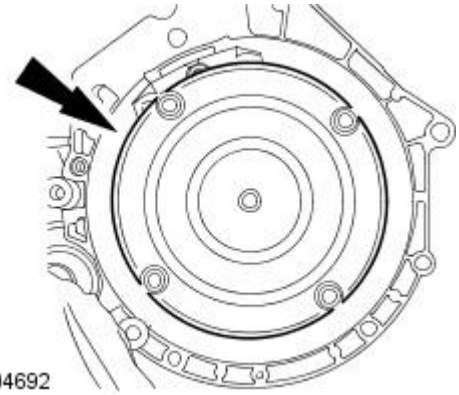

2. CAUTION: Do not let the torque converter drop out of the transmission. Failure to follow this instruction may result in personal injury.

Remove the torque converter.

- Drain any remaining fluid into a suitable container.

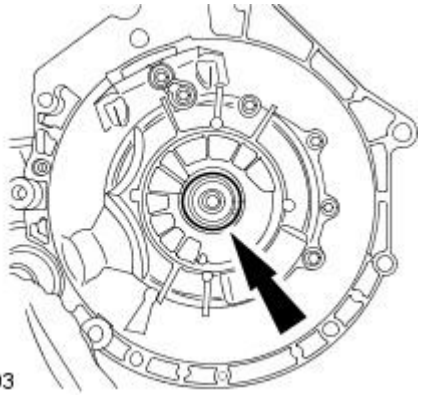

3. NOTE: Make sure the transmission housing seal face is not damaged when removing the torque converter seal.

Using a suitable tool, remove the torque converter seal.

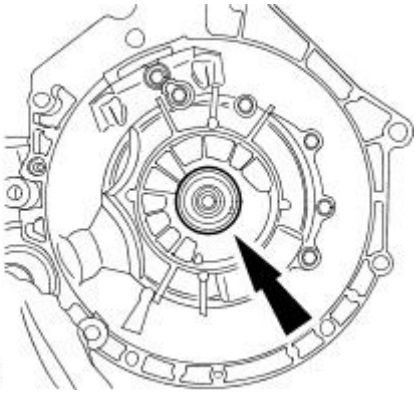

4. NOTE: Using a suitable Metal surface cleaner WSE-M5B392-A or equivalent meeting Jaguar specification. clean the seal face on the housing before fitting the new seal.

Clean and inspect the transmission housing seal face.

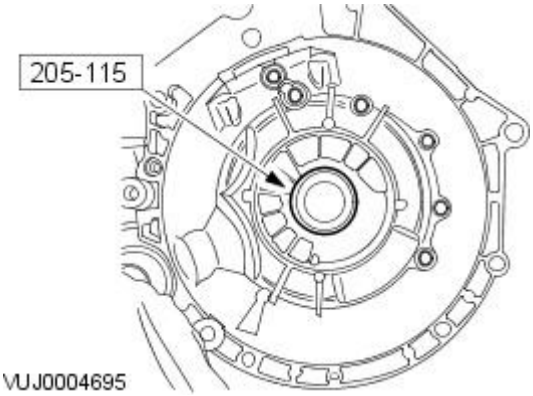

5. Using the special tool, install a new torque converter seal.

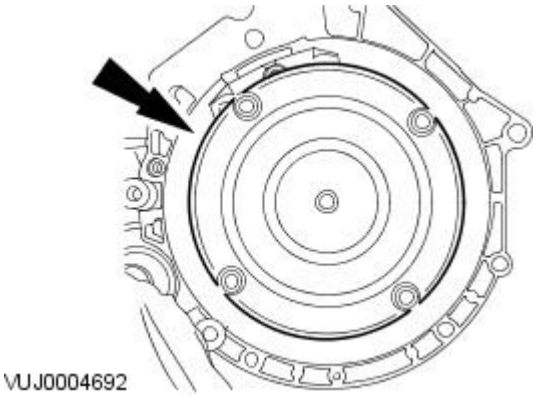

6. CAUTION: Do not let the torque converter drop out of the transmission. Failure to follow this instruction may result in personal injury.

• NOTE: The torque converter hub must engage fully in the oil pump drive gear.

Install the torque converter.

7. Install the transmission assembly. For additional information, refer to Transmission.

Automatic Transmission / Transaxle - Vehicles With: 5-Speed Automatic Transaxle - JATCO - Transaxle

Installation

Special Tool(s)	
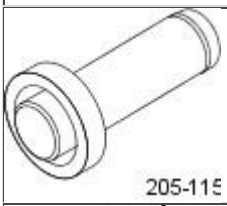 205-115	Halfshaft oil seal installer 205-115
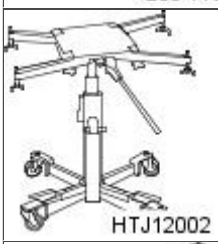 HTJ12002	Powertrain assembly jack HTJ1200-2
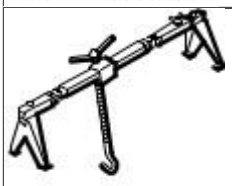 303-021	Engine support bracket 303-021
E46047	Engine support brackets 303-1068

Installation

All vehicles

CAUTION: When replacing or installing a new automatic transaxle. The transaxle control module (TCM) adaptation procedure must be carried out using the Jaguar approved diagnostic system using software issue 19 or higher, where available. If the Jaguar approved diagnostic system is not available the TCM must be replaced. Failure to follow this instruction will result in damage to the automatic transaxle.

1. CAUTION: If the automatic transmission fluid is very dirty or it contains metallic particles, then along with a new transmission, install a new automatic transmission fluid cooler and lines.

Flush the transaxle fluid cooler and fluid tubes.

2. NOTE: Use high-temperature grease ESD-M1C220-A or equivalent meeting Jaguar specification.

Apply a thin layer of grease to the centering spigot bore on the torque converter.

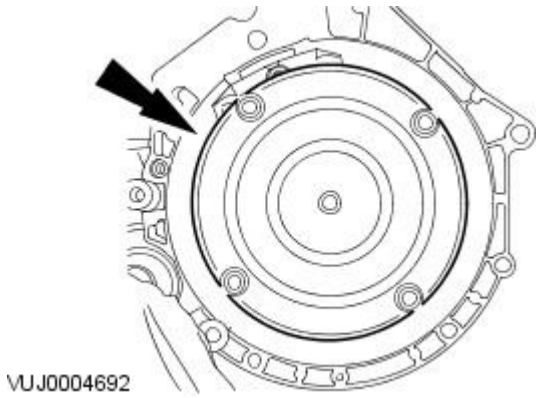

3. CAUTION: The torque converter must remain at the correct installation depth throughout the whole installation procedure.

• NOTE: The torque converter hub must engage fully in the fluid pump drive gear.

Check the installation depth between the transaxle flange and the torque converter is at least 0.04 mm (0.015 in).

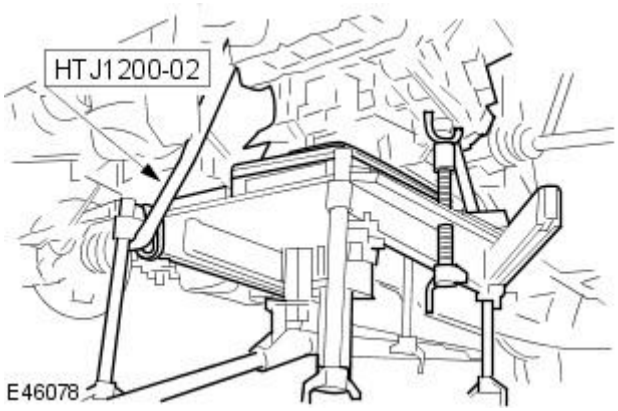

4. WARNING: Do not let the torque converter drop out of the transaxle. Failure to follow this instruction may result in personal injury.

Install the transaxle.

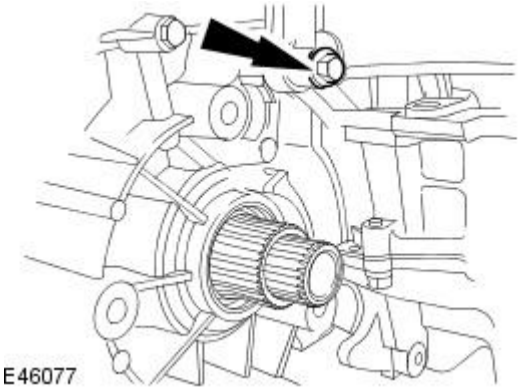

5. NOTE: Carry out this step if a later condition transaxle is being installed.

• NOTE: Vehicles with 2.5L and 3.0L engines shown, vehicles with 2.0L engine similar.

Install the transaxle retaining bolt.

- Tighten to 48 Nm.

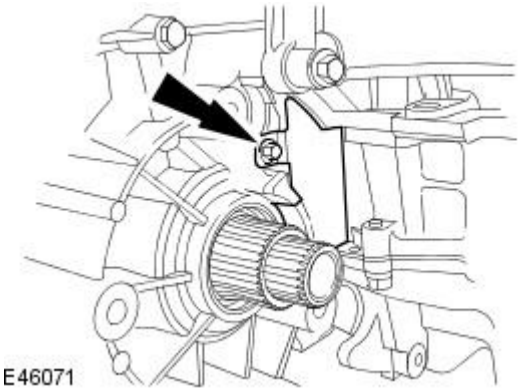

6. NOTE: Carry out this step if a later condition transaxle is being installed.

• NOTE: Vehicles with 2.5L and 3.0L engines shown, vehicles with 2.0L engine similar.

Install the transaxle dust cover.

- Tighten to 10 Nm.

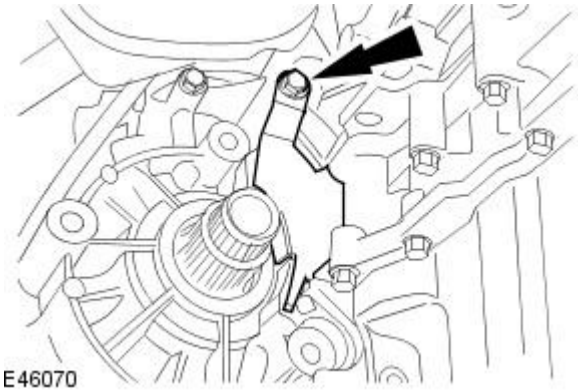

7. NOTE: Carry out this step if an early condition transaxle is being installed.

• NOTE: Vehicles with 2.5L and 3.0L engines shown, vehicles with 2.0L engine similar.

Install the transaxle retaining bolt

- Install the transaxle dust cover.
- Tighten to 48 Nm.

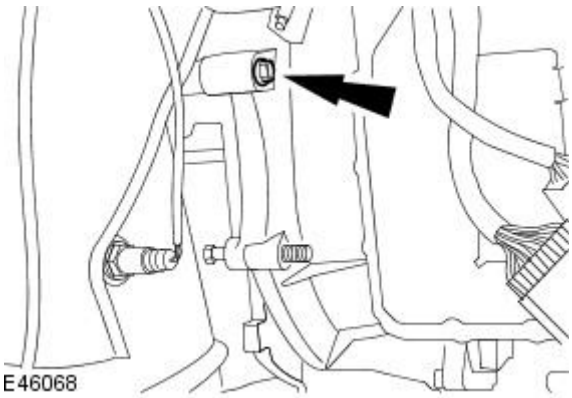

8. Install the transaxle retaining bolt.

- Tighten to 48 Nm.

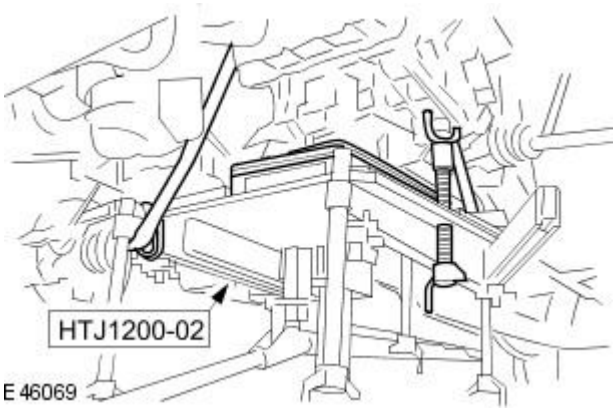

9. Remove the powertrain assembly jack.

- Remove the transaxle to the powertrain assembly jack securing strap.

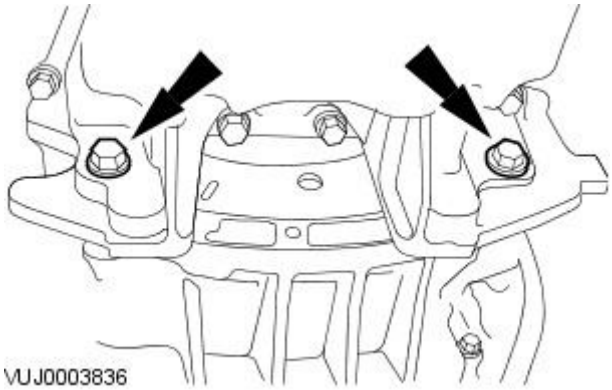

10. Install the transaxle retaining bolts.

- Tighten to 48 Nm.

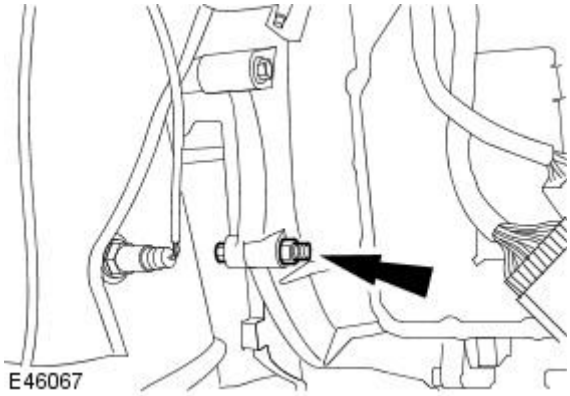

11. Install the transaxle retaining nut.

- Tighten to 48 Nm.

12. Lower the vehicle.

13. Install the transaxle mount bracket securing bolts.

- Tighten to 48 Nm.

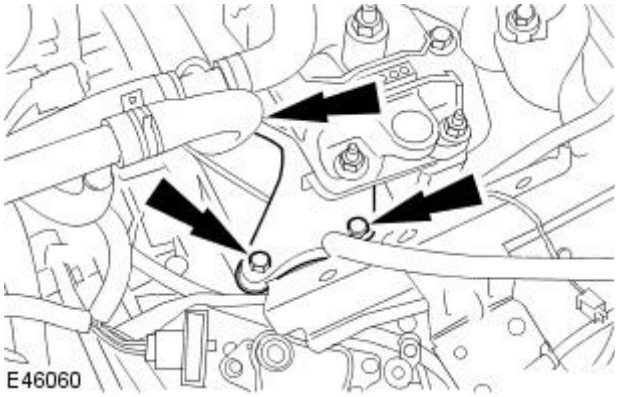

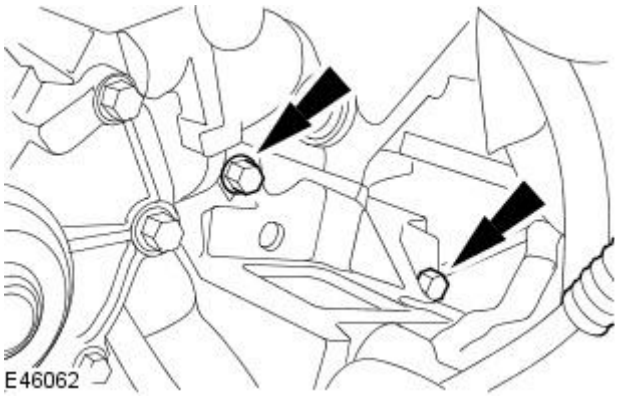

14. Install the transaxle retaining bolts.

- Tighten to 48 Nm.

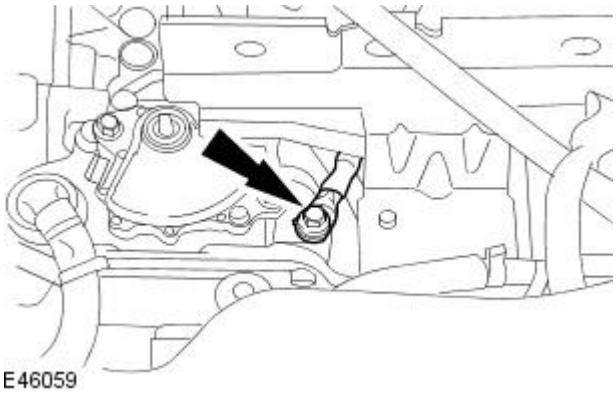

15. Attach the transaxle ground lead.

- Tighten to 25 Nm.

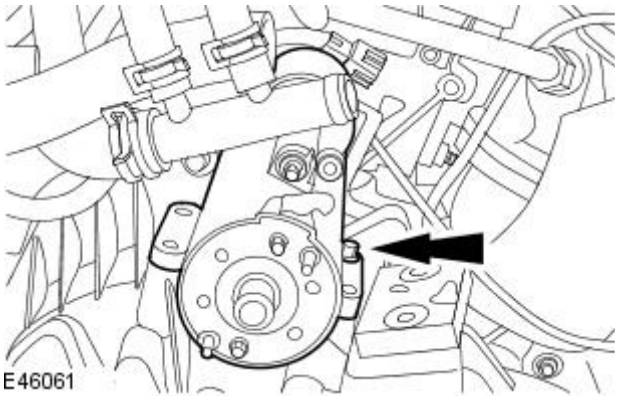

16. Install the starter motor.

- Tighten to 35 Nm.

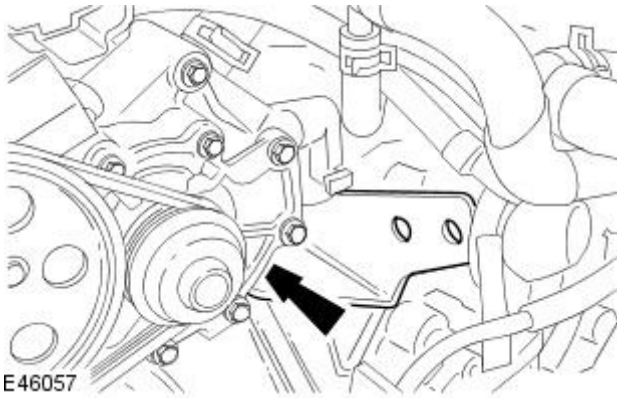

17. Install the support bar mount bracket.

- Install the starter motor front retaining bolt.
- Tighten to 35 Nm.

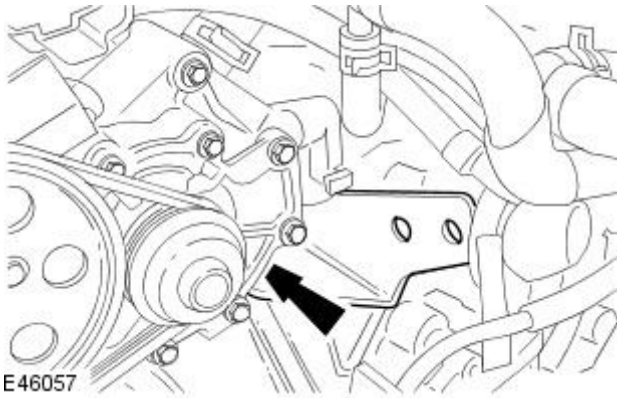

18. Install support bar mount bracket/transaxle upper retaining bolt.

- Tighten to 48 Nm.

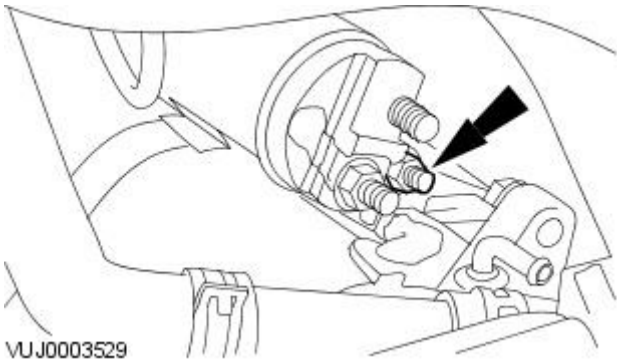

19. Attach the starter motor solenoid electrical connector.

- Tighten to 6 Nm.

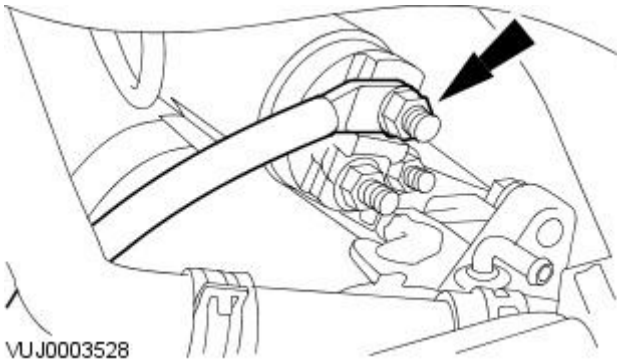

20. Attach the starter motor electrical connector.

- Tighten to 12 Nm.

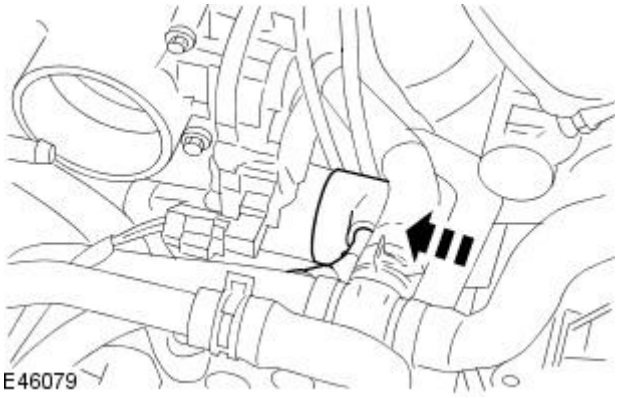

21. Attach the starter motor solenoid cover.

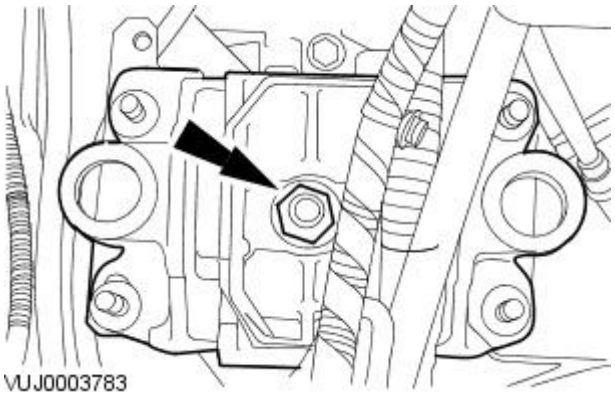

22. Remove the support insulator retaining nut.

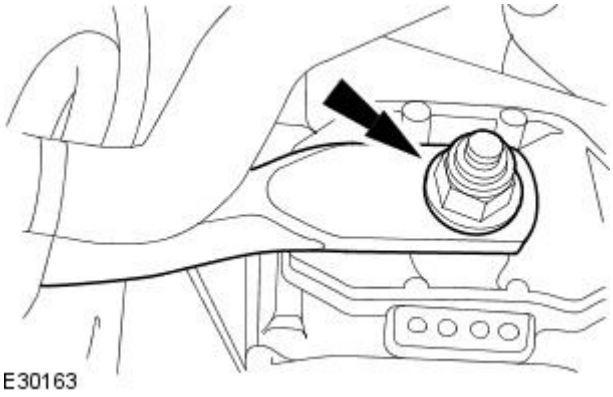

23. Install the support insulator bar.

- Tighten to 133 Nm.

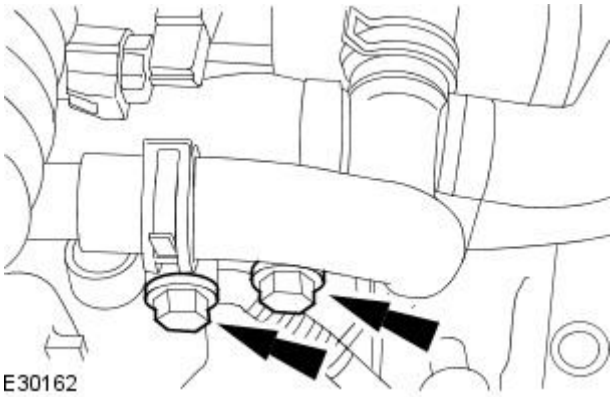

24. Install the support bar retaining bolts.

- Tighten to 25 Nm.

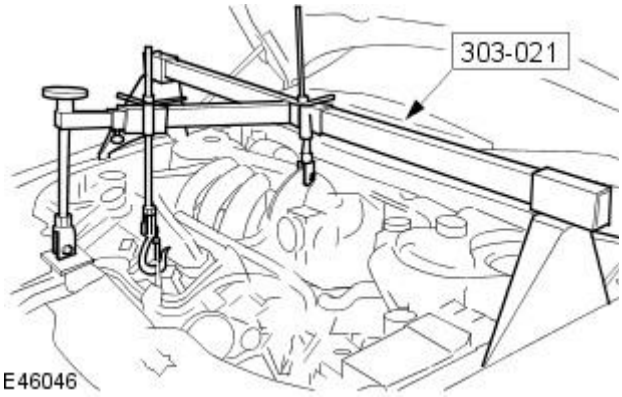

25. Remove the engine support bracket.

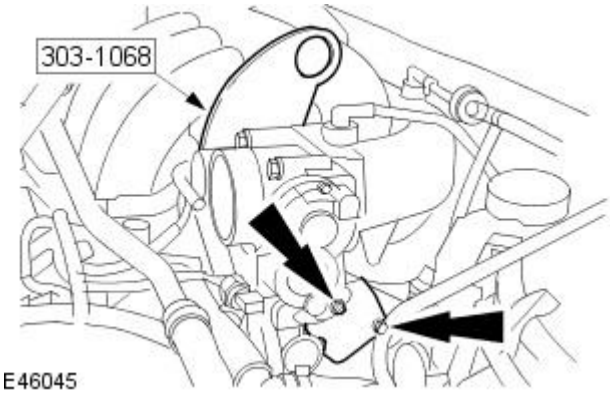

26. Remove the engine support bracket.

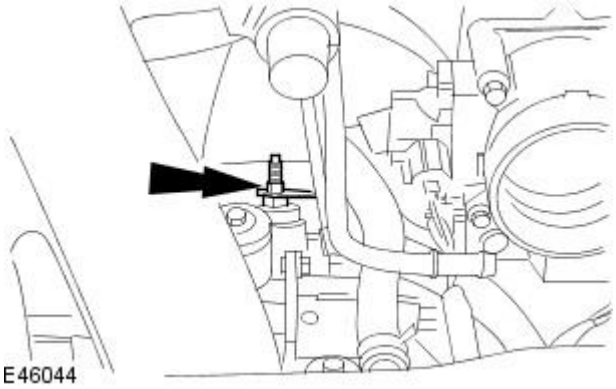

27. Attach the wiring harness from the camshaft cover retaining stud.

- Tighten to 6 Nm.

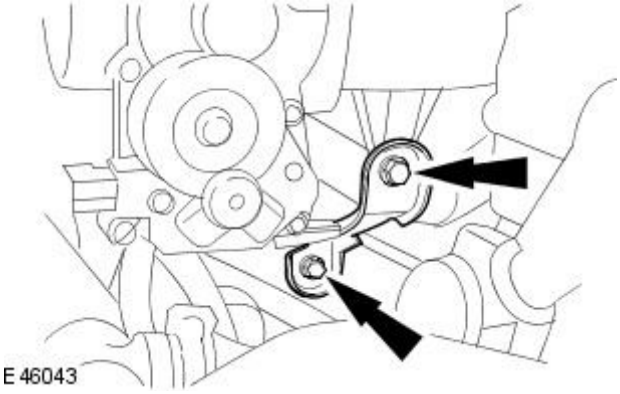

28. Install the intake manifold support bracket.

- Tighten to 10 Nm.

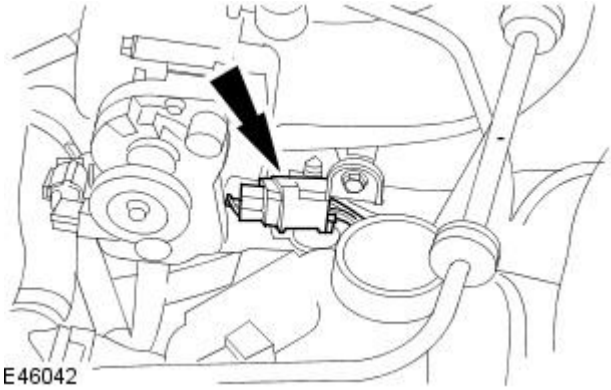

29. Attach the electrical connector to the intake manifold support bracket.

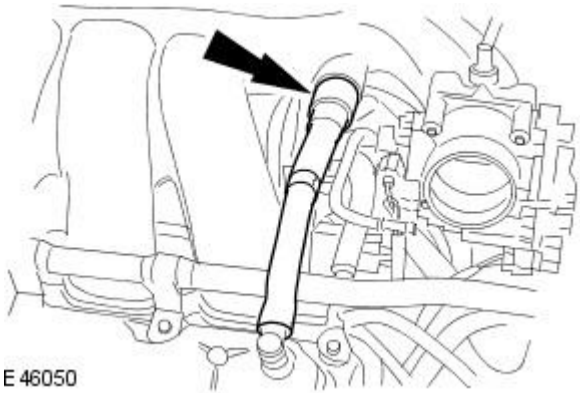

30. Attach the positive crankcase ventilation (PCV) hose to the intake manifold.

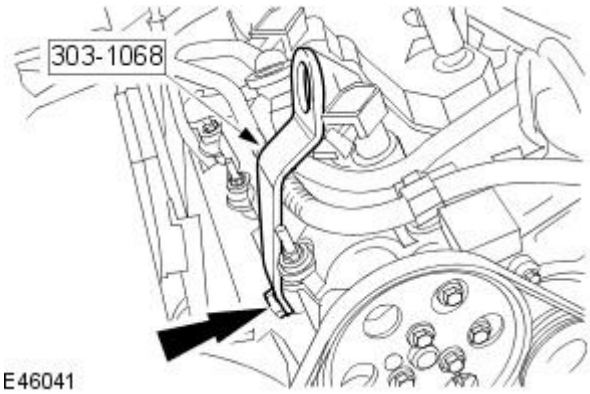

31. Remove the engine support bracket.

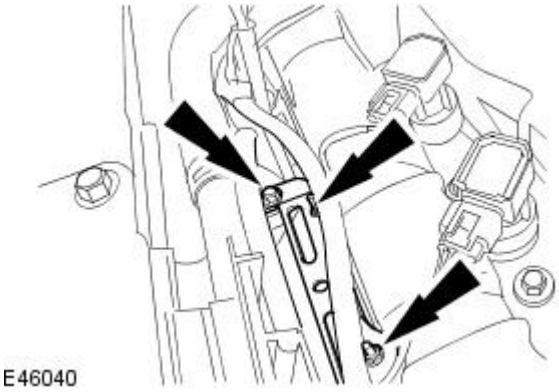

32. Install the air cleaner mount bracket.

- Tighten to 6 Nm.

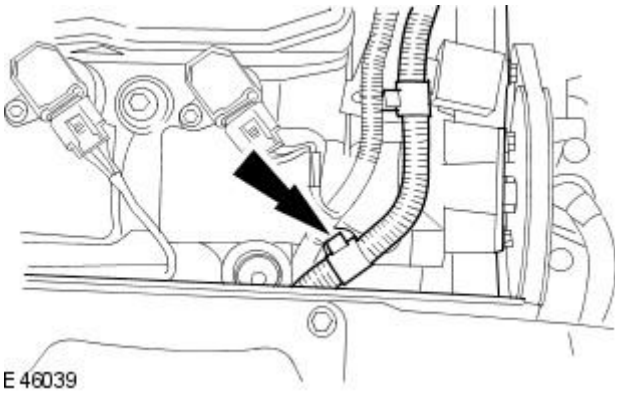

33. Attach the generator wiring harness retaining clip to the camshaft cover retaining clip.

34. Raise the vehicle.

35. Connect the transaxle electrical connectors.

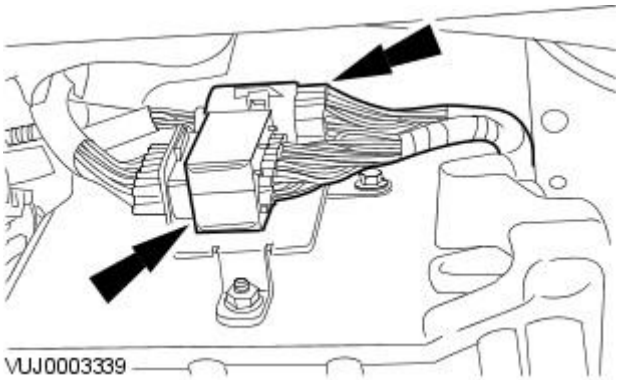

36. Connect the transaxle fluid cooler tubes.

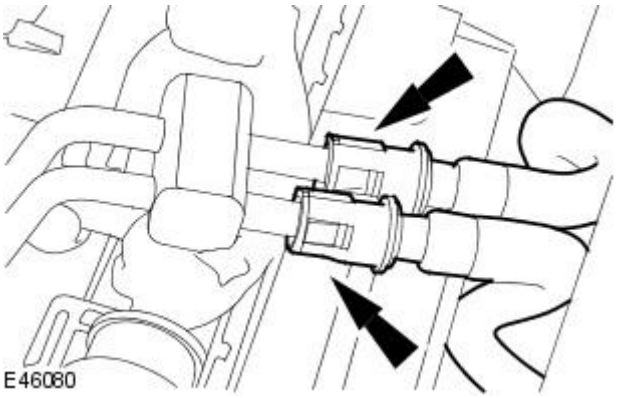

37. NOTE: Rotate the torque converter to gain access for the remaining retaining bolts.

Install the torque converter retaining bolts.

- Tighten to 55 Nm.

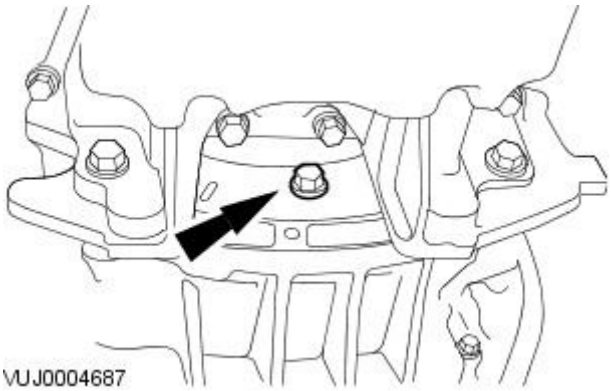

38. Install the torque converter retaining bolts access cover.

- Tighten to 10 Nm.

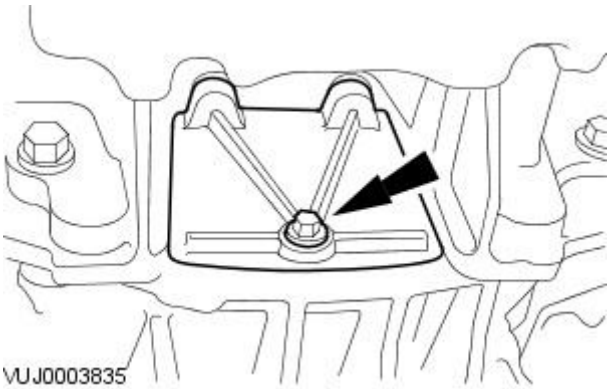

39. NOTE: Remove the transaxle plug.

Using the special tool, install a new halfshaft seal.

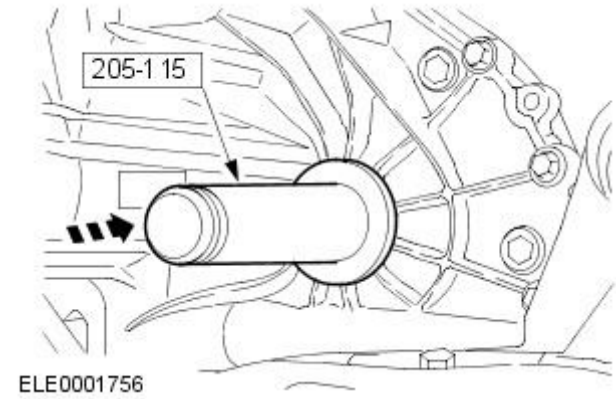

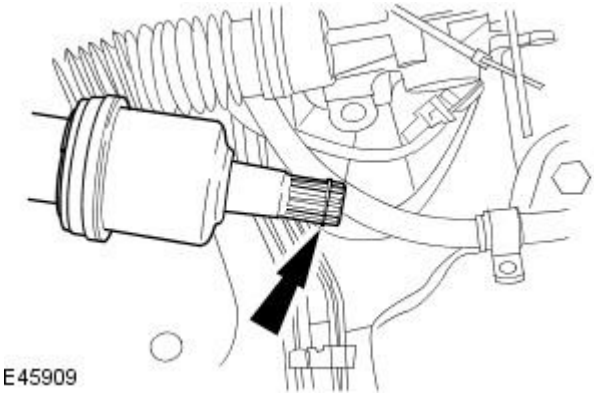

40. Install a new halfshaft snap ring.

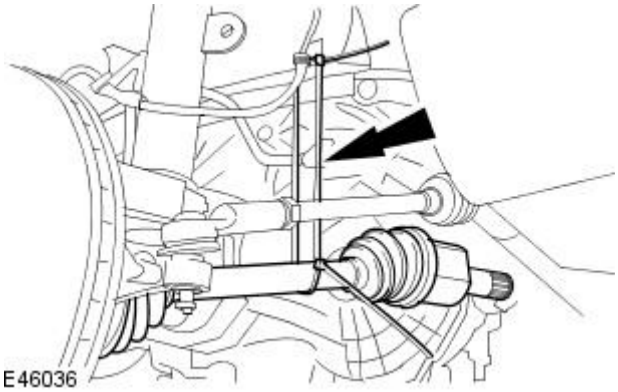

41. CAUTION: Make sure the halfshaft constant velocity (CV) joints do not over articulate. Failure to follow this instruction may result in damage to the CV joints.

Detach the halfshaft.

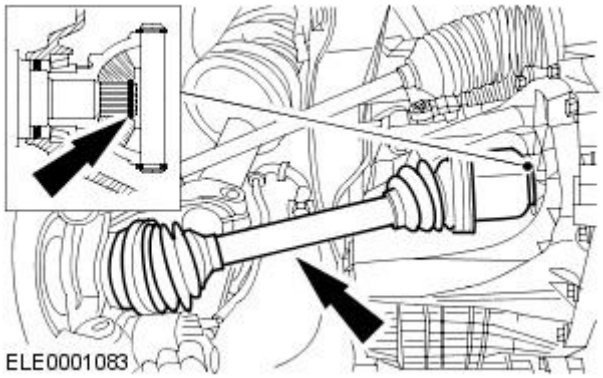

42. CAUTIONS:

Make sure the halfshaft constant velocity (CV) joints do not over articulate. Failure to follow this instruction may result in damage to the CV joints.

Make sure the halfshaft seal is not damaged. Failure to follow this instruction may result in an transaxle fluid leak.

Attach the right-hand halfshaft to the transaxle.

- Make sure the halfshaft snap ring is correctly seated.

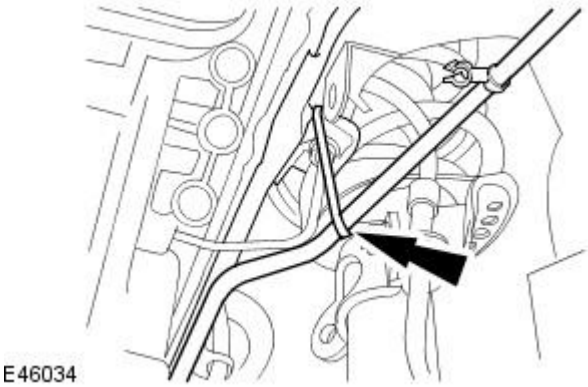

43. Detach the power steering fluid pipe.

Vehicles with 2.0L engine

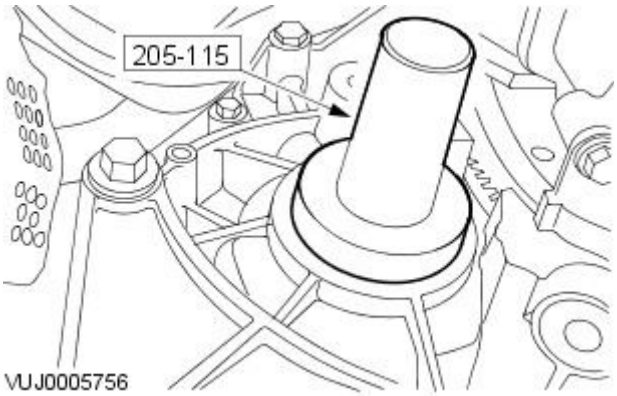

44. NOTE: Remove the transaxle plug.

Using the special tool, install a new halfshaft seal.

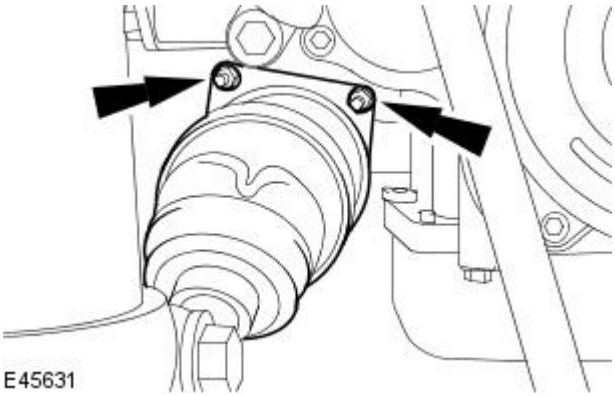

45. CAUTION: Make sure the halfshaft constant velocity (CV) joints do not over articulate. Failure to follow this instruction may result in damage to the CV joints.

Attach the right-hand halfshaft.

- Engage the right-hand halfshaft to the transaxle.
- Tighten to 25 Nm.

Vehicles with 2.5L or 3.0L engine

46. Install the transfer case.
For additional information, refer to: Transfer Case (308-07 Transfer Case, Installation).

47. Install the steering gear heat shield.

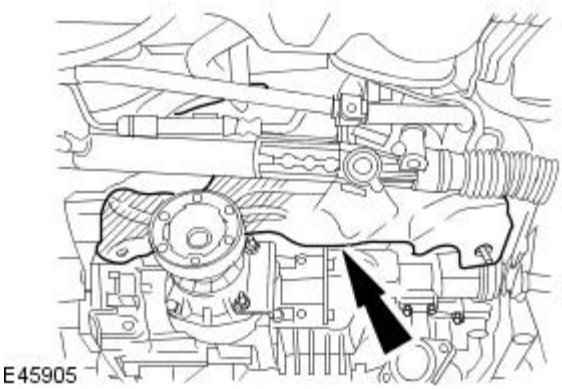

48. Install the steering gear heat shield bracket.

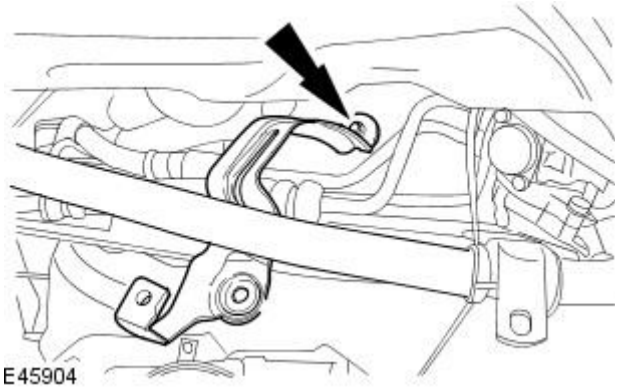

All vehicles

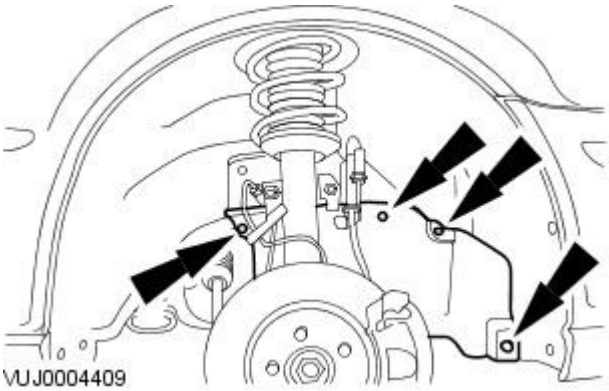

49. NOTE: Right-hand shown, left-hand similar.

Install the fender splash shield access panel.

50. Install the front subframe.
For additional information, refer to: Front Subframe - 2.0L NA V6 - AJV6/2.5L NA V6 - AJV6/3.0L NA V6 - AJ27 (502-00 Uni-Body, Subframe and Mounting System, Removal and Installation).

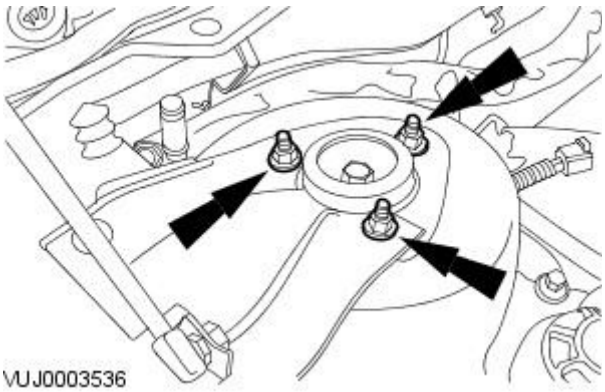

51. Tighten the right-hand shock absorber and spring assembly securing nuts.

- Tighten to 25 Nm.

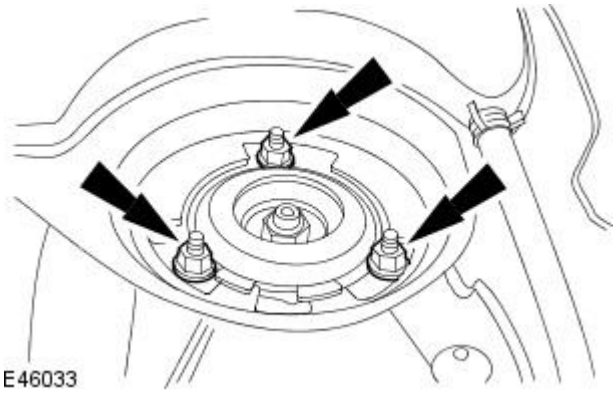

52. Tighten the left-hand shock absorber and spring assembly securing nuts.

- Tighten to 25 Nm.

53. Install the air cleaner.
For additional information, refer to: Air Cleaner (303-12A Intake Air Distribution and Filtering - 2.0L NA V6 - AJV6/2.5L NA V6 - AJV6/3.0L NA V6 - AJ27, Removal and Installation).

54. Install the battery tray.
For additional information, refer to: Battery Tray (414-01 Battery, Mounting and Cables, Removal and Installation).

55. Check the transaxle fluid level.
For additional information, refer to: Transmission Fluid Level Check (307-01B Automatic Transmission/Transaxle - Vehicles With: 6-Speed Automatic Transaxle - AWF21, General Procedures).

56. NOTE: For NAS vehicles only.

If required, carry out a long drive cycle.
For additional information, refer to: Powertrain Control Module (PCM) Long Drive Cycle Self-Test (303-14A Electronic Engine Controls - 2.0L NA V6 - AJV6/2.5L NA V6 - AJV6/3.0L NA V6 - AJ27, General Procedures).

Automatic Transmission / Transaxle - Vehicles With: 6-Speed Automatic Transaxle - AWF21 -

Lubricant, Sealers, Solvents and Adhesives

Description	Specification
High-temperature grease	ESD-M1C220-A
Metal surface cleaner	WSW-M5B392-A
Sealant	WSK-M4G320-A
Adhesives	Loctite 243

Fluid Maintenance

CAUTION: Use only C2S-51628 automatic transmission fluid. Use of any other fluids may result in a transmission malfunction or failure.

Intervals	
Normal Maintenance	Not necessary. Filled for life.

General Specifications

Engine	Dry Fill - Approximate Liters	Refil - Approximate Liters	Fluid Type
2.2L	6.6	5.6	C2S-51628

Description	Nm	lb-ft
Main control valve body screws	10	7
Torque converter retaining bolts	60	44
Transaxle retaining bolts	48	35
Emission control valve retaining bolts	30	22
Transaxle support insulator retaining nut	130	96
Transmission control module retaining nuts	24	18
Transmission fluid drain plug	47	35
Transmission fluid filler plug	40	30
Transmission fluid level plug	7	5
Transmission turbine shaft speed (TSS) sensor	6	4
Transmission fluid pan retaining bolts	13	10
Starter motor retaining bolts	35	26
Starter motor solenoid electrical connector retaining nut	6	4
Starter motor electrical connector retaining nut	12	9
Wiring harness to camshaft cover retaining stud, retaining nut	6	4
Intake manifold support bracket retaining bolts	10	7
Air cleaner mount bracket retaining nuts and bolt	6	4
Left-hand driveshaft retaining nuts	25	18
Shock absorber and spring assembly securing nuts	25	18
Transaxle ground lead	25	18
Support bar retaining bolts	25	18

Automatic Transmission / Transaxle - Vehicles With: 6-Speed Automatic Transaxle - AWF21 - Transmission DescriptionVehicles With: 6-Speed Automatic Transaxle - AWF21

Description and Operation

COMPONENT LOCATION - AW F21 6 SPEED AUTOMATIC TRANSMISSION 2009MY

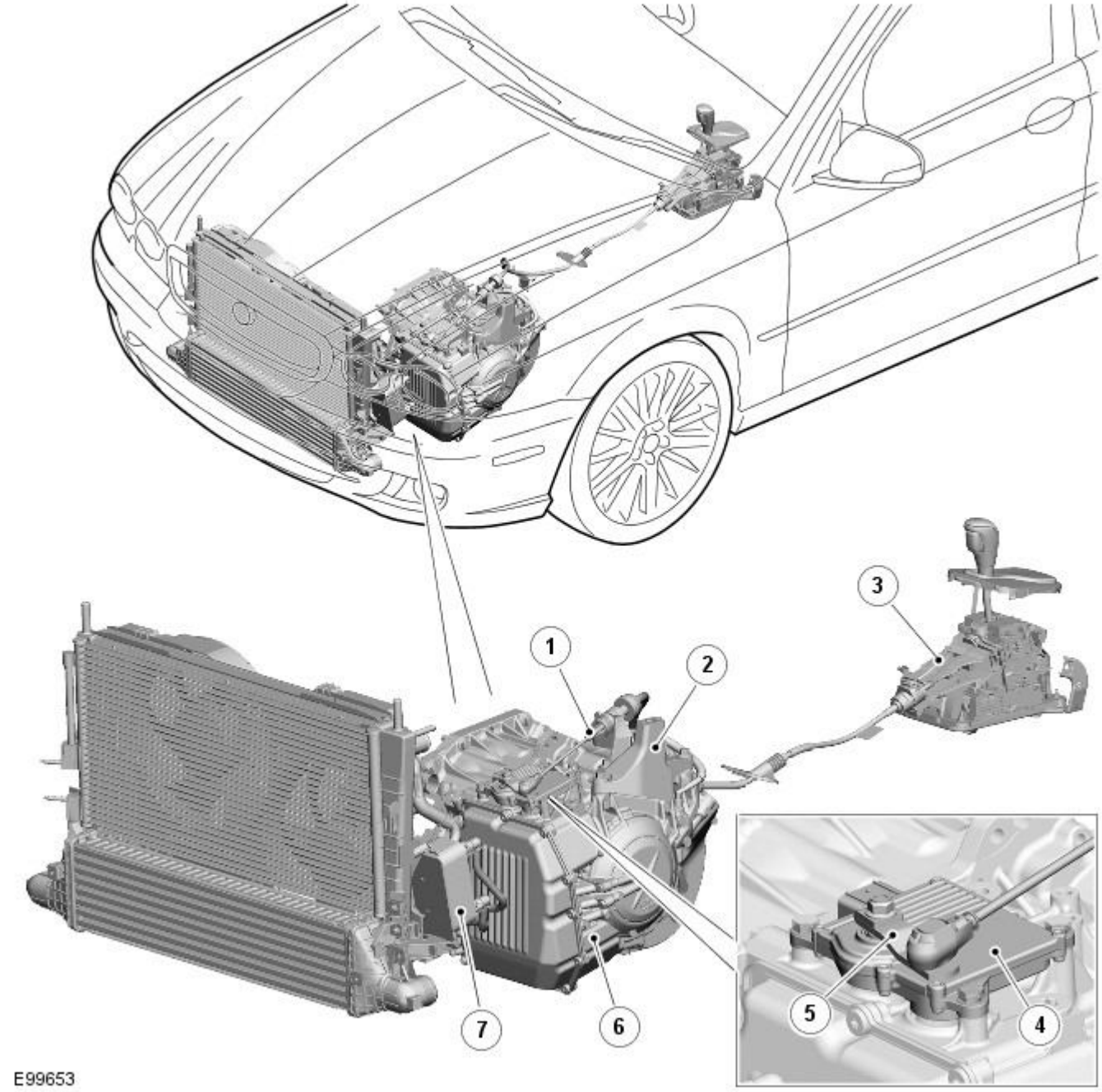

Item	Part Number	Description
1	-	Selector cable
2	-	Cable bracket
3	-	Transmission selector lever assembly
4	-	Transmission Control Module (TCM)
5	-	Lever arm
6	-	Automatic transmission
7	-	Transmission fluid cooler

OVERVIEW

The AW F21 automatic transmission is a 6 speed, electronically controlled unit manufactured by Aisin AW in Japan. The transmission represents the latest in automatic transmission technology for a transverse unit. The transmission features lock-up slip control, 'Jaguar Sequential Shift' functions and automatic and driver selectable modes to give the optimum performance.

The transmission is controlled by a TCM (transmission control module) which contains software to provide operation as a semi-automatic 'Jaguar Sequential Shift' transmission. The TCM allows the transmission to be operated as a conventional automatic unit by selecting P, R, N, D on the selector lever. Movement of the selector lever across the gate to the 'M/S' position puts the transmission into electronic 'Sport' mode. Further movement of the lever in a longitudinal direction to the + or – position puts the transmission into electronic manual 'Jaguar Sequential Shift' mode.
For additional information, refer to: External Controls - Vehicles With: 6-Speed Automatic Transaxle - AWF21 (307-05B Automatic Transmission/Transaxle External Controls - Vehicles With: 6-Speed Automatic Transaxle - AWF21, Description and Operation).

The AW F21 transmission has the following features:

- Designed to be maintenance free
- Torque capacity of 450 Nm
- Transmission fluid is fill for life
- The torque converter features a controlled slip feature with electronically regulated lock-up control on gears 2 to 6
- Shift programs controlled by the TCM
- TCM has an adaptive capability to ensure efficient gear shift quality throughout the service life of the transmission
- Diagnostics available from the TCM via the high speed CAN (controller area network) bus.

TRANSMISSION

The transmission comprises the main casing which houses all of the transmission components. The torque converter is located in a separate converter housing.

AW F21 Automatic Transmission - Sectional View

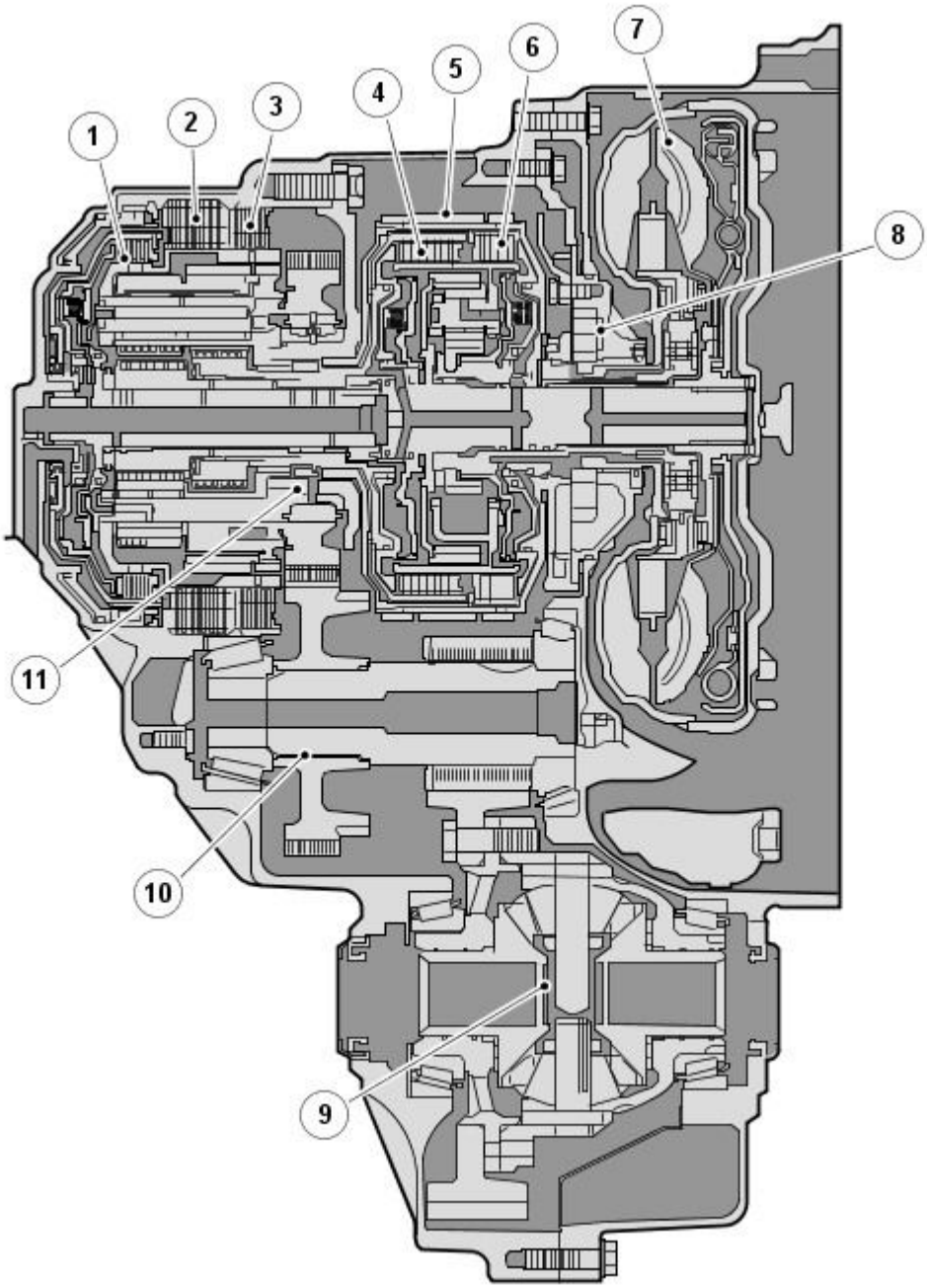

E83814

Item	Part Number	Description
1	-	Clutch - C2
2	-	Brake - B2
3	-	One-way clutch - F1
4	-	Clutch - C1
5	-	Brake - B1
6	-	Clutch - C3
7	-	Torque converter
8	-	Fluid pump
9	-	Differential assembly
10	-	Counter driven gear
11	-	Counter drive gear

The main casing retains the fluid at the bottom. A combined drain/filler plug is located in the bottom of the casing. The oil level is checked by removing the inner fill plug when the transmission fluid is at a temperature of between 50 to 60°C (122 to 140°F). When the oil flow becomes a drip from the plug hole, the level is correct.

The transmission has a fluid cooler which is located on the LH (left-hand) end of the engine cooling radiator. The cooler is connected to the transmission converter housing by 2 pipes. The fluid cooler is connected into the engine cooling system and cools the transmission fluid by heat transfer through the cooler to the engine coolant.

For additional information, refer to: Transmission Cooling - Vehicles With: 6-Speed Automatic Transaxle - AWF21 (307-02B Transmission/Transaxle Cooling - Vehicles With: 6-Speed Automatic Transaxle - AWF21, Description and Operation).

TORQUE CONVERTER

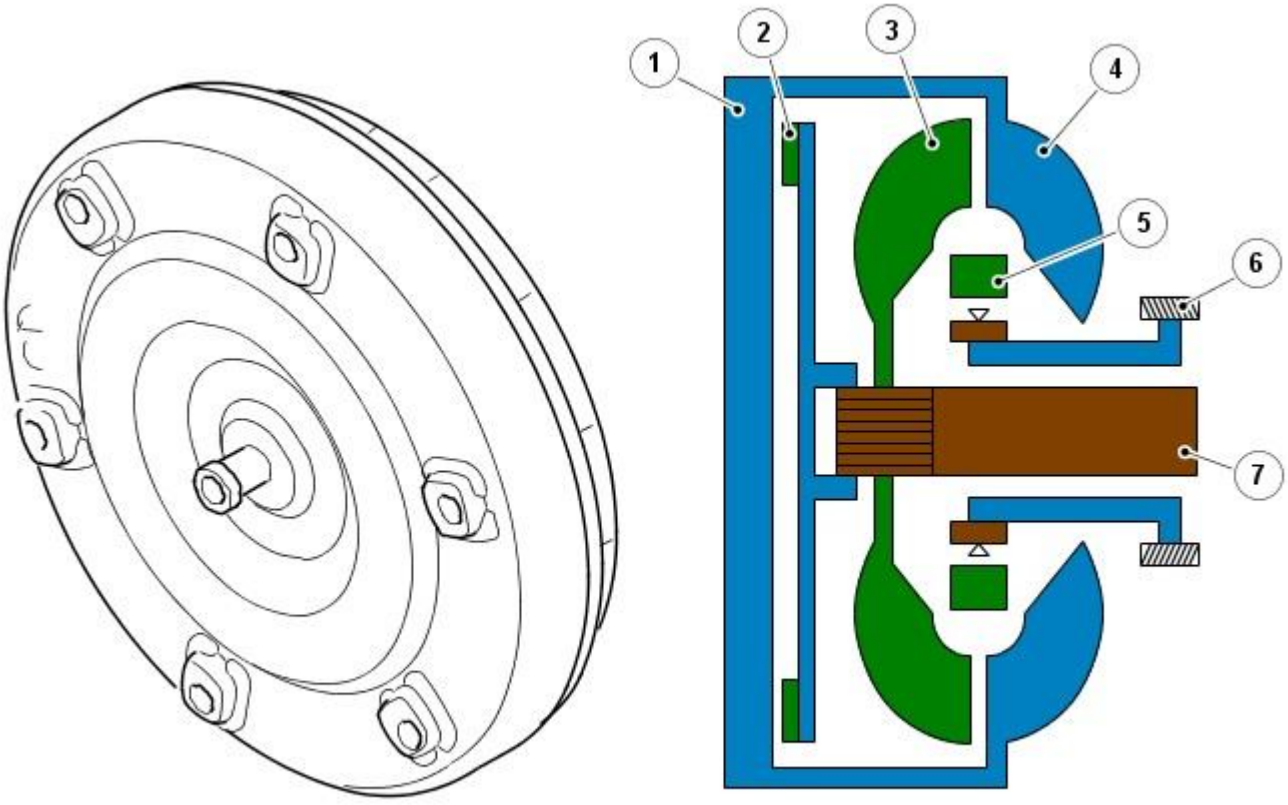

E83815

Item	Part Number	Description
1	-	Torque converter housing
2	-	Lock-up clutch
3	-	Turbine
4	-	Impeller
5	-	Stator
6	-	Fluid pump
7	-	Input shaft

The torque converter is the coupling element between the engine and the transmission and is located in the transmission housing, on the engine side of the transmission. The driven power from the engine crankshaft is transmitted hydraulically and mechanically through the torque converter to the transmission. The torque converter is connected to the engine by a drive plate.

The torque converter comprises an impeller, a stator and a turbine. The torque converter is a sealed unit with all components located between the converter housing cover and the impeller. The two components are welded together to form a sealed, fluid filled housing. With the impeller welded to the converter housing cover, the impeller is therefore driven at engine crankshaft speed.

The torque converter contains a hydraulically operated lock-up clutch which is controlled by the TCM via a solenoid in the valve block which actuates spool valves to control the hydraulic pressure applied to the clutch. This allows the TCM to provide 3 modes of converter operation; unlocked, partially locked and fully locked.

VALVE BLOCK

The valve block is located in a vertical position at the front of the transmission main casing, behind a sealed cover. The valve block contains a number of solenoids, dampers and spool valves to control the transmission operation. The solenoids are controlled by the TCM to provide gear changes and smooth transition between ratio changes.

Solenoids

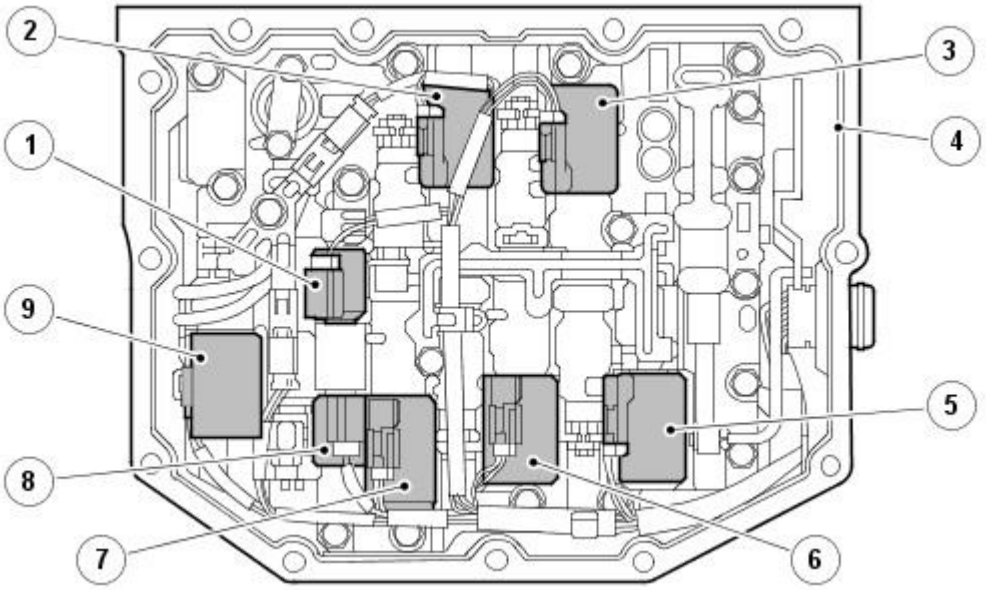

Item	Part Number	Description
1	-	3-Way solenoid - S2
2	-	Shift control solenoid - SLC2
3	-	Shift control solenoid - SLC1
4	-	Valve block
5	-	Lock-up control solenoid - SLU
6	-	Shift control solenoid - SLC3
7	-	Shift control solenoid - SLB1
8	-	3-Way solenoid - S1
9	-	Line pressure control solenoid - SLT

Shift Control Solenoids - SLC1, SLC2, SLC3, SLB1

The shift control solenoids (SLC1, SLC2, SLC3 and SLB1) are installed on the front valve body. The solenoids respond to inputs from the TCM and control the hydraulic pressure applied to the clutches (C1, C2 and C3) and to the brake B1 to provide smooth shifting. The TCM uses a single or a combination of these solenoids to provide shifts from 1st to 6th gear.

If a solenoid fails, the TCM will remove the current to the shift control solenoids and the transmission will use limp home mode, to prevent damage to the transmission.

Line Pressure Control Solenoid - SLT

The line pressure control solenoid (SLT) is installed on the front valve body. The solenoid is controlled in a linear manner by the TCM which uses throttle opening degree signals and engine torque information from the ECM (engine control module) to determine the solenoid operation. The solenoid controls the line pressure applied to the clutches and brakes to provide smooth shifting.

If the solenoid fails, the TCM will remove the current supplied to the solenoid. Maximum line pressure will be applied to the clutches and brakes unless the failure is due to the solenoid valve sticking, which may result in low line pressure.

Lock-Up Control Solenoid - SLU

The lock-up control solenoid is installed on the front valve body. The solenoid is controlled in a linear manner by the TCM which uses engine speed, throttle opening degree signals and transmission speed sensor signals to determine the solenoid operation. The solenoid controls the amount of lock-up or slip required for the torque converter lock-up clutch.

If the solenoid fails, the TCM removes the current supplied to the solenoid which results in no torque converter lock-up being applied.

3-Way Solenoid - S1, S2

The 3-way solenoid (S1) is located on the center valve body and solenoid (S2) is located on the front valve body. The solenoids are on/off solenoids controlled by the TCM. A combination of the 2 solenoids is used to operate either the 1st gear engine braking or enable gear shifts.

If a solenoid fails, the TCM will remove the current supplied to both solenoids.

Speed Sensors

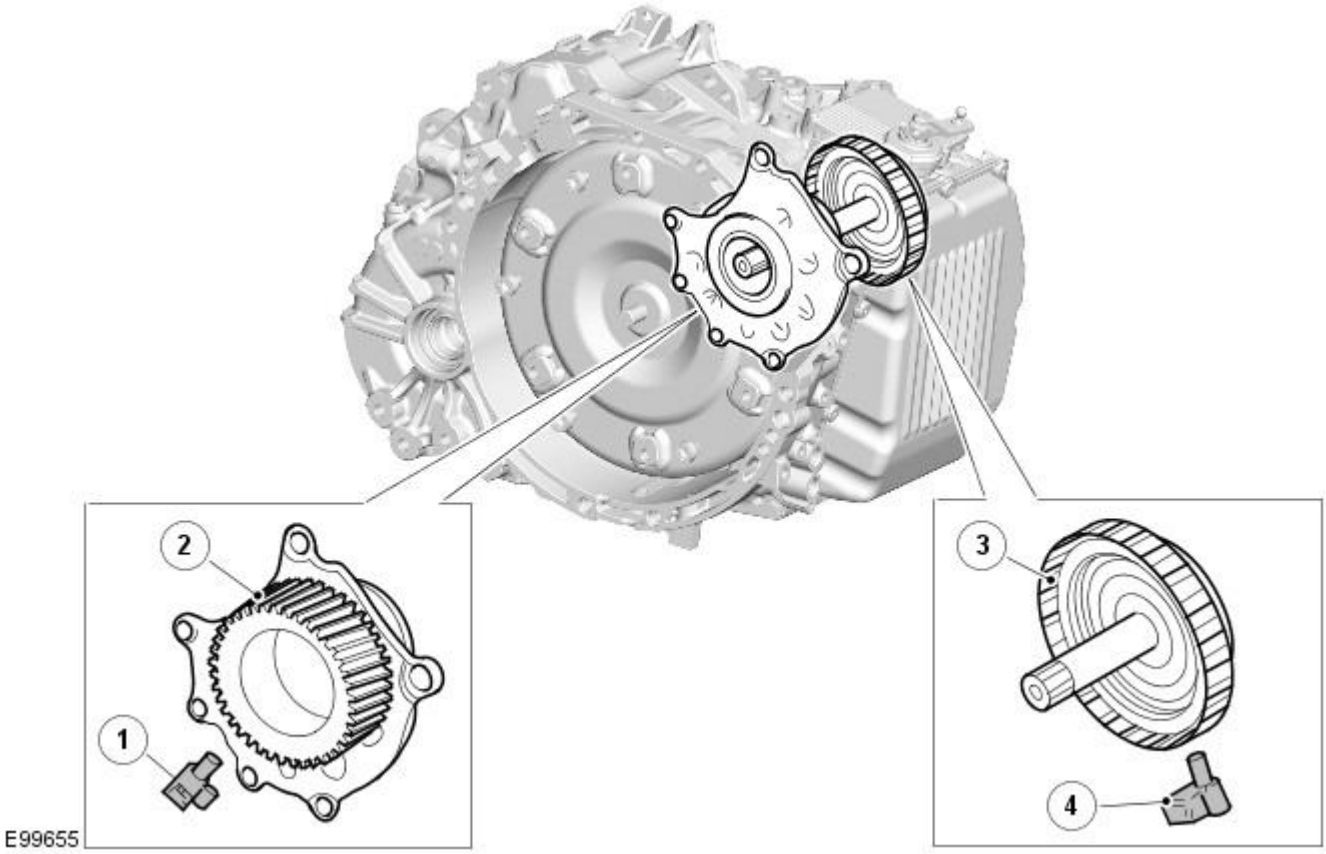

Item	Part Number	Description
1	-	Speed Sensor (SP) - Output shaft speed
2	-	Counter drive gear
3	-	C2 clutch drum
4	-	Speed sensor (NIN)

Two speed sensors (NIN and SP) are used in the transmission and are located within the transmission housing. Speed sensor (SP) is located adjacent to the counter drive gear and reads from the gear teeth to provide an output shaft speed signal. Speed sensor (NIN) is located adjacent to the clutch C" drum and reads off teeth on the outer circumference of the drum to provide an input shaft speed. Both speed signals are received by the TCM which uses the 2 signals to calculate engine torque output, shift timing and torque converter lock-up.

Fluid Temperature Sensor

The fluid temperature sensor is integrated into the internal wiring harness within the transmission. It detects the fluid temperature in the hydraulic pressure control circuit and transmits a signal corresponding to the temperature to the TCM. The TCM monitors the temperature and provides smooth gear shifts across a wide range of temperatures.

DRIVE CLUTCHES

Multiplate Drive or Brake Clutch – Typical

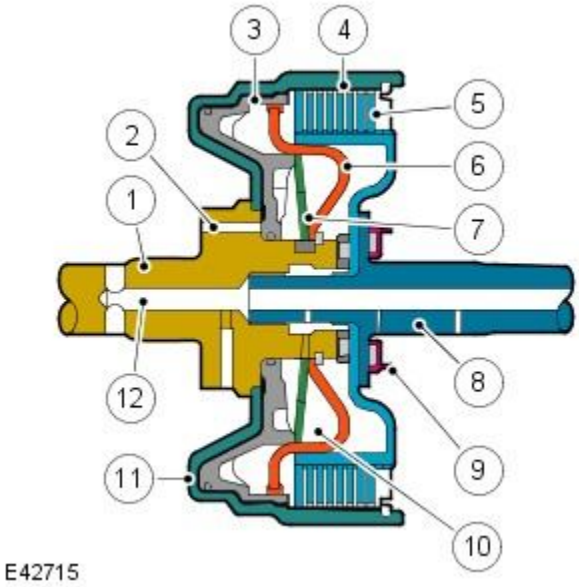

Item	Part Number	Description
1	-	Input shaft
2	-	Main pressure supply port
3	-	Piston
4	-	Cylinder – External plate carrier
5	-	Clutch plate assembly
6	-	Baffle plate

7	-	Diaphragm spring
8	-	Output shaft
9	-	Bearing
10	-	Dynamic pressure equalisation chamber
11	-	Piston chamber
12	-	Lubrication channel

There are three drive clutches and two brake clutches (B2 is a multiplate brake clutch & B1 is a double wrap brake band) used in the AW F21 transmission. Each clutch comprises one or more friction plates dependent on the output controlled. A typical clutch consists of a number of steel outer plates and inner plates with friction material bonded to each face.

Clutch / Brake	Operation
C1 Clutch	Connects the front planetary carrier to the rear planetary rear sun gear
C2 Clutch	Connects the intermediate shaft to the rear planetary carrier
C3 Clutch	Connects the front planetary carrier to the rear planetary middle sun gear
B1 Brake	Locks the rear planetary middle sun gear
B2 Brake	Locks the rear planetary carrier

The clutch plates are held apart mechanically by a diaphragm spring and hydraulically by dynamic pressure. The pressure is derived from a lubrication channel which supplies fluid to the bearings etc. The fluid is passed via a drilling in the output shaft into the chamber between the baffle plate and the piston. To prevent inadvertent clutch application due to pressure build up produced by centrifugal force, the fluid in the dynamic pressure equalization chamber overcomes any pressure in the piston chamber and holds the piston off the clutch plate assembly.

When clutch application is required, main pressure from the fluid pump is applied to the piston chamber from the supply port. This main pressure overcomes the low pressure fluid present in the dynamic pressure equalization chamber. The piston moves, against the pressure applied by the diaphragm spring, and compresses the clutch plate assembly. When the main pressure falls, the diaphragm spring pushes the piston away from the clutch plate assembly, disengaging the clutch.

One-Way Clutch

One-Way clutch - Typical

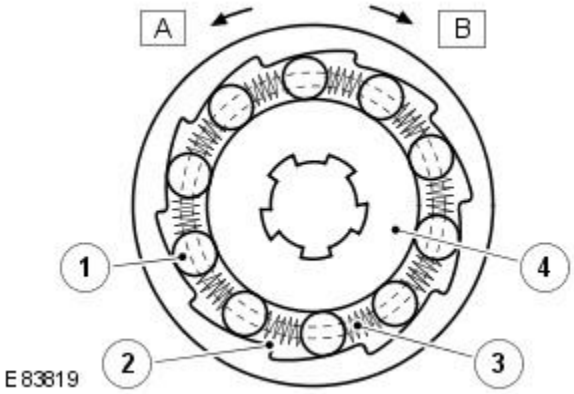

Item	Part Number	Description
1	-	Roller
2	-	Cage
3	-	Spring
4	-	Inner race

The roller clutch used on the one-way clutch uses parallel rollers, located between the smooth, cylindrical inner race and the inclined cam faces of the clutch body. Springs are used to hold the rollers in position between the two contact faces.

When the clutch is rotated in a clockwise direction, the rollers become trapped between the inner race and the inclined cam faces of the clutch body, providing positive (locked) rotation of the inner race, locking the counter-clockwise rotation of the rear planetary carrier. When the clutch is rotated in a clockwise direction, the rollers are moved away from the inclined cam faces and can rotate freely (unlocked) with the clutch body, providing no drive from the clutch to the rear planetary carrier. In this condition the clutch can rotate freely on the inner race.

PLANETARY GEAR TRAIN

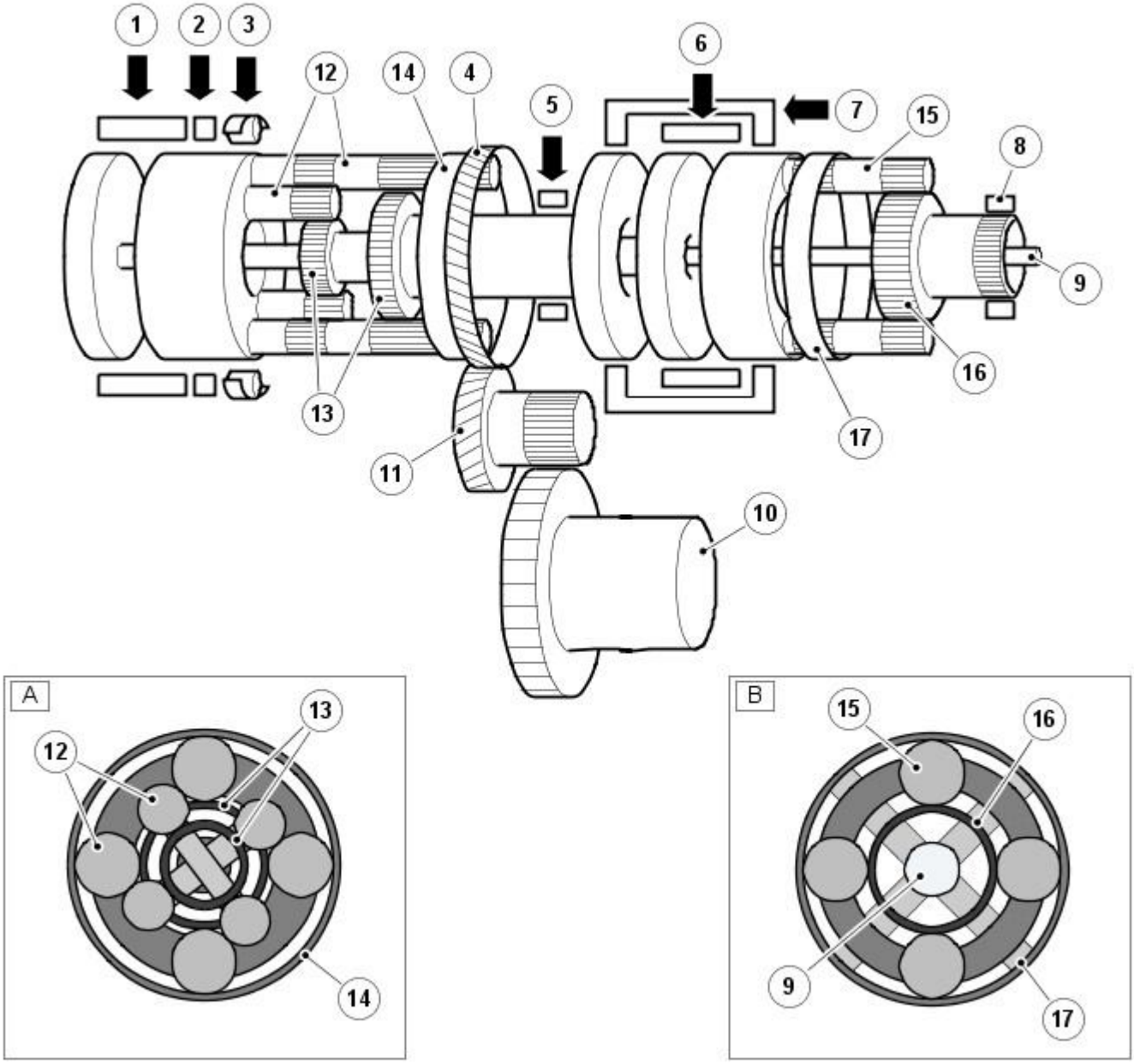

Item	Part Number	Description
1	-	Clutch C2
2	-	Brake B2
3	-	One way clutch F1
4	-	Counter drive gear
5	-	Brake B1
6	-	Clutch C1
7	-	Clutch C3
8	-	Fluid pump
9	-	Input shaft
10	-	Differential gear assembly
11	-	Counter gear assembly
12	-	Pinion gears
13	-	Sun gears
14	-	Ring gear
15	-	Pinion gear
16	-	Sun gears
17	-	Ring gear

The planetary gear trains used on the AW F21 transmission comprise a single web planetary gear train and a double web planetary gear train. These gear trains are known as Ravignaux type gear trains and together produce the six forward gears and the one reverse gear.

Engine torque is transferred, via operation of single or combinations of clutches to the two planetary gear trains. Both gear trains are controlled by reactionary inputs from brake clutches to produce the six forward gears and one reverse gear. The ratios are as follows:

Gear	1st	2nd	3rd	4th	5th	6th	Reverse
Ratio	4.148	2.370	1.556	1.155	0.859	0.686	3.394

POWER FLOWS

Operation of the transmission is controlled by the TCM which electrically activates various solenoids to control the transmission gear selection. The sequence of solenoid activation is based on programmed information in the module memory and physical transmission operating conditions such as vehicle speed, throttle position, engine load and selector lever position.

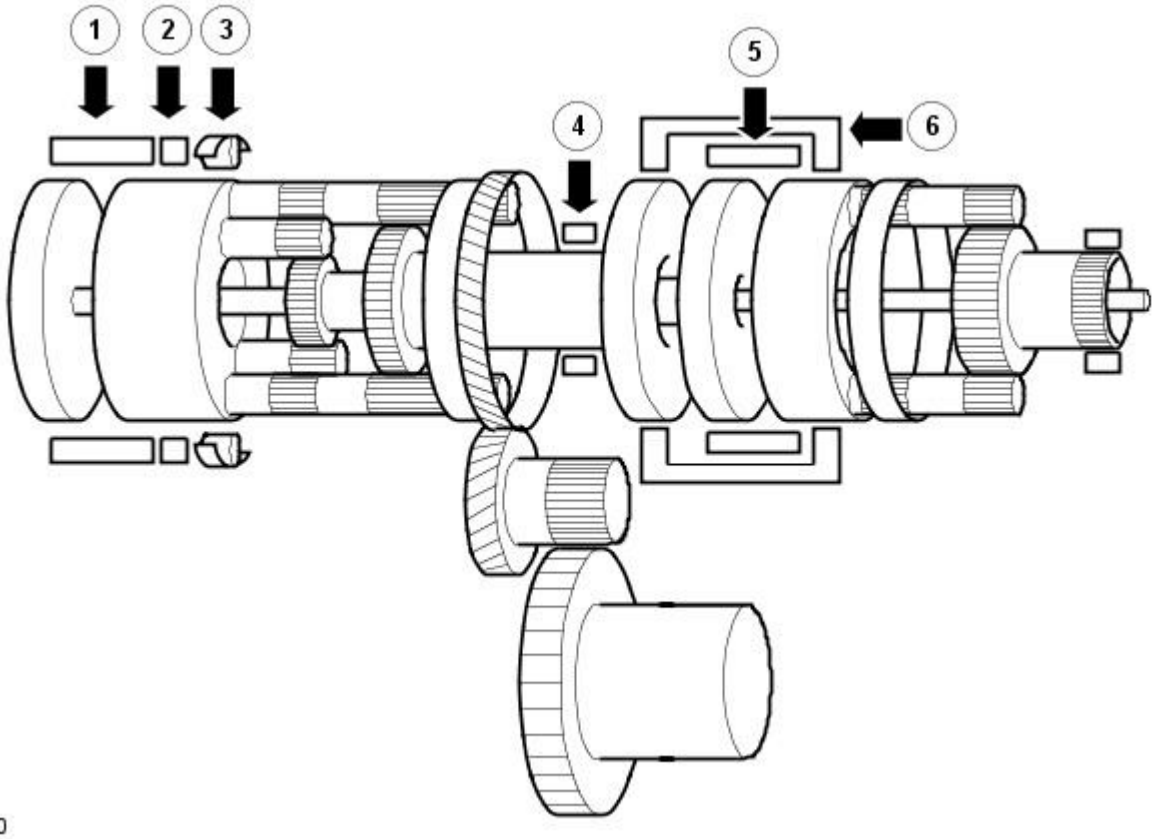

Item	Part Number	Description
1	-	Clutch - C2
2	-	Brake - B2
3	-	One-way clutch - F1
4	-	Brake - B1
5	-	Clutch - C1
6	-	Clutch - C3

Power Flow - 1st Gear Engine Braking

Solenoid Operation

Transmission Selector Lever Position		Solenoid					
		SLC 1	SLC 2	SLC 3	SLB 1	S1	S2
D	Engine Brake	-	X	X	X	X	X

X = Operating

Clutch and Brake Operation

Transmission Selector Lever Position		Clutch			Brake		One-Way clutch
		C1	C2	C3	B1	B2	F1
D	Engine Brake	X	-	-	-	X	X

X = Operating

When the engine brake is active, driving force is transmitted to the transmission from the road wheels, via the power transfer unit. The rear planetary carrier is locked from clockwise rotation by the one-way clutch (F1) and brake (B2). This results in torque from the wheels being transmitted directly to the engine, providing engine braking.

Power Flow - 1st Gear

Solenoid Operation

Transmission Selector Lever Position		Solenoid					
		SLC 1	SLC 2	SLC 3	SLB 1	S1	S2
D	1st Gear	-	X	X	X	-	-

X = Operating

Clutch and Brake Operation

Transmission Selector Lever Position		Clutch			Brake		One-Way clutch
		C1	C2	C3	B1	B2	F1
D	1st Gear	X	-	-	-	-	X

X = Operating

The planetary gear trains are in the following conditions:

- Front planetary gear train
  - Input: Ring gear
  - Locked: Sun gear
  - Output: Carrier
- Rear planetary gear train
  - Input: Rear sun gear
  - Locked: Carrier
  - Output: Ring gear

Front Planetary Gear Train

The input shaft rotates in a clockwise direction, driven by the torque converter. The planetary ring gear rotates in a clockwise direction along with the planetary pinion gear which also rotates clockwise on its axis and orbit. The planetary sun gear is locked by the fluid pump which causes it to press against the planetary ring gear and orbit the sun gear, rotating on its axis.

The front planetary carrier rotates clockwise in the same direction as the planetary pinion gear. The clutch (C1) is activated and locks the planetary carrier to the rear planetary sun gear.

Rear Planetary Gear Train

The planetary sun gear rotates in a clockwise direction. The planetary short pinion gear rotates in a counter-clockwise direction. The planetary carrier attempts to rotate in the same direction but is restrained by the one-way clutch (F1).

The long pinion gear rotates clockwise on its axis and the middle sun gear rotates counter-clockwise while idling. The ring gear is rotated by the long pinion gear and drives the counter drive gear in a clockwise direction.

The counter driven gear is driven in a counter-clockwise direction which in turn drives the differential ring gear in a clockwise direction.

Power Flow - 2nd Gear

Solenoid Operation

Transmission Selector Lever Position		Solenoid					
		SLC 1	SLC 2	SLC 3	SLB 1	S1	S2
D	2nd Gear	-	X	X	-	-	-

X = Operating

Clutch and Brake Operation

Transmission Selector Lever Position		Clutch			Brake		One-Way clutch
		C1	C2	C3	B1	B2	F1
D	2nd Gear	X	-	-	X	-	-

X = Operating

The planetary gear trains are in the following conditions:

- Front planetary gear train
  - Input: Ring gear
  - Locked: Sun gear
  - Output: Carrier
- Rear planetary gear train
  - Input: Rear sun gear
  - Locked: Middle sun gear
  - Output: Ring gear

Front Planetary Gear Train

The input shaft rotates in a clockwise direction, driven by the torque converter. The planetary ring gear rotates in a clockwise direction along with the planetary pinion gear which also rotates clockwise on its axis and orbit. The planetary sun gear is locked by the fluid pump which causes it to press against the planetary ring gear and orbit the sun gear, rotating on its axis.

The front planetary carrier rotates clockwise in the same direction as the planetary pinion gear. The clutch (C1) is activated and locks the planetary carrier to the rear planetary sun gear.

Rear Planetary Gear Train

The planetary sun gear and the carrier rotate in a clockwise direction. The middle sun gear is locked by the brake (B1). The short pinion gears rotate counter-clockwise on its axis and orbits in a clockwise direction. The long pinion gears rotates clockwise on its axis and its orbit.

The ring gear is rotated in a clockwise direction by the long pinion gear. The ring gear and the counter drive gear both rotate in a clockwise direction.

The counter driven gear is driven in a counter-clockwise direction which in turn drives the differential ring gear in a clockwise direction.

• NOTE: Engine braking is available when this gear is selected.

Power Flow - 3rd Gear

Solenoid Operation

Transmission Selector Lever Position		Solenoid					
		SLC 1	SLC 2	SLC 3	SLB 1	S1	S2
D	3rd Gear	-	X	-	X	-	-

X = Operating

Clutch and Brake Operation

Transmission Selector Lever Position		Clutch			Brake		One-Way clutch
		C1	C2	C3	B1	B2	F1
D	3rd Gear	X	-	-	X	-	-

X = Operating

The planetary gear trains are in the following conditions:

- Front planetary gear train
  - Input: Ring gear
  - Locked: Sun gear
  - Output: Carrier
- Rear planetary gear train
  - Input: Middle sun gear
  - Locked: -
  - Output: Ring gear

Front Planetary Gear Train

The input shaft rotates in a clockwise direction, driven by the torque converter. The planetary ring gear rotates in a clockwise direction along

with the planetary pinion gear which also rotates clockwise on its axis and orbit. The planetary sun gear is locked by the fluid pump which causes it to press against the planetary ring gear and orbit the sun gear, rotating on its axis.

The front planetary carrier rotates clockwise in the same direction as the planetary pinion gear. The clutch (C1) is activated and locks the planetary carrier to the rear planetary sun gear. Clutch (C3) is also activated and locks the carrier to the middle sun gear.

Rear Planetary Gear Train

The planetary short pinion gear and the long pinion gear are engaged which causes both pinion gears to lock due to the different rotational directions. Torque from the sun gear and middle sun gear is transmitted to the planetary ring gear which rotates clockwise in the same direction as the planetary carrier.

The counter drive gear rotates in a clockwise direction with the ring gear.

The counter driven gear is rotated in a counter-clockwise direction which in turn drives the differential ring gear in a clockwise direction.

• NOTE: Engine braking is available when this gear is selected.

Power Flow - 4th Gear

Solenoid Operation

Transmission Selector Lever Position		Solenoid					
		SLC 1	SLC 2	SLC 3	SLB 1	S1	S2
D	4th Gear	-	-	X	X	-	-

X = Operating

Clutch and Brake Operation

Transmission Selector Lever Position		Clutch			Brake		One-Way clutch
		C1	C2	C3	B1	B2	F1
D	4th Gear	X	X	-	-	-	-

X = Operating

The planetary gear trains are in the following conditions:

- Front planetary gear train
  - Input: Ring gear
  - Locked: Sun gear
  - Output: Carrier
- Rear planetary gear train
  - Input: Rear sun gear, Carrier
  - Locked: -
  - Output: Ring gear

Front Planetary Gear Train

The input shaft rotates in a clockwise direction, driven by the torque converter. The planetary ring gear rotates in a clockwise direction along with the planetary pinion gear which also rotates clockwise on its axis and orbit. The planetary sun gear is locked by the fluid pump which causes it to press against the planetary ring gear and orbit the sun gear, rotating on its axis.

The front planetary carrier rotates clockwise in the same direction as the planetary pinion gear. The clutch (C1) is activated and locks the planetary carrier to the rear planetary sun gear. The intermediate shaft rotates in the same direction as the input shaft. Clutch (C2) is also activated rotates in the same direction as the intermediate shaft.

Rear Planetary Gear Train

The planetary carrier rotates in a clockwise direction with the intermediate shaft. The short pinion gear rotates clockwise on its axis and orbits at a faster speed than the sun gear. The long pinion gear rotates counter-clockwise on its axis and orbit. The rotation of the ring gear is in a clockwise direction and is slower than the rotation of the carrier due to the long pinion gear's rotation is counteracted by the planetary carrier.

The counter drive gear rotates in a clockwise direction with the ring gear.

The counter driven gear is rotated in a counter-clockwise direction which in turn drives the differential ring gear in a clockwise direction.

• NOTE: Engine braking is available when this gear is selected.

Power Flow - 5th Gear

Solenoid Operation

Transmission Selector Lever Position		Solenoid					
		SLC 1	SLC 2	SLC 3	SLB 1	S1	S2
D	5th Gear	X	-	-	X	-	-

X = Operating

Clutch and Brake Operation

Transmission Selector Lever Position		Clutch			Brake		One-Way clutch
		C1	C2	C3	B1	B2	F1
D	5th Gear	-	X	X	-	-	-

X = Operating

The planetary gear trains are in the following conditions:

- Front planetary gear train
  - Input: Ring gear
  - Locked: Sun gear
  - Output: Carrier
- Rear planetary gear train
  - Input: Middle sun gear
  - Locked: -
  - Output: Ring gear

Front Planetary Gear Train

The input shaft rotates in a clockwise direction, driven by the torque converter. The planetary ring gear rotates in a clockwise direction along with the planetary pinion gear which also rotates clockwise on its axis and orbit. The planetary sun gear is locked by the fluid pump which causes it to press against the planetary ring gear and orbit the sun gear, rotating on its axis.

The front planetary carrier rotates clockwise in the same direction as the planetary pinion gear. The clutch (C3) is activated and locks the planetary carrier to the rear planetary middle sun gear. The intermediate shaft rotates in the same direction as the input shaft. Clutch (C2) is also activated and rotates in the same direction as the intermediate shaft.

Rear Planetary Gear Train

The middle sun gear rotates clockwise in the same direction as clutch (C3). The deceleration of the front planetary gear slows the speed of the input shaft. The intermediate shaft rotates clockwise in the same direction as the input shaft. The planetary carrier also rotates clockwise in the same direction as the intermediate shaft.

The long pinion gear rotates clockwise on its axis and orbit. The carrier rotates faster than the middle sun gear which causes the middle pinion gear to be cancelled out by the speed difference. The middle pinion gear orbits and rotates on its axis in a clockwise direction.

The planetary ring gear rotates in a clockwise direction. The speed of the ring gear is faster than the planetary carrier because the long pinion gear's rotation is combined with the planetary carrier's speed. The counter drive gear rotates in a clockwise direction with the ring gear.

The counter driven gear is rotated in a counter-clockwise direction which in turn drives the differential ring gear in a clockwise direction.

• NOTE: Engine braking is available when this gear is selected.

Power Flow - 6th Gear

Solenoid Operation

Transmission Selector Lever Position		Solenoid					
		SLC 1	SLC 2	SLC 3	SLB 1	S1	S2
D	6th Gear	X	-	X	-	-	-

X = Operating

Clutch and Brake Operation

Transmission Selector Lever Position		Clutch			Brake		One-Way clutch
		C1	C2	C3	B1	B2	F1
D	6th Gear	-	X	-	X	-	-

X = Operating

The planetary gear trains are in the following conditions:

- Front planetary gear train
  - Input: -
  - Locked: -
  - Output: -
- Rear planetary gear train
  - Input: Carrier
  - Locked: Middle sun gear
  - Output: Ring gear

Front Planetary Gear Train

The input shaft rotates in a clockwise direction, driven by the torque converter. The intermediate shaft rotates clockwise in the same direction as the torque converter. Clutch (C2) locks the intermediate shaft to the rear planetary carrier.

Rear Planetary Gear Train

The planetary carrier rotates clockwise in the same direction as the intermediate shaft. The planetary long pinion gear rotates clockwise on its axis and orbit. The rotational speed of the middle sun gear increases with input shaft speed because it is locked.

The planetary ring gear rotates in a clockwise direction. The speed of the ring gear is faster than the planetary carrier because the long pinion gear's rotation is combined with the planetary carrier's speed. The counter drive gear rotates in a clockwise direction with the ring gear.

The counter driven gear is rotated in a counter-clockwise direction which in turn drives the differential ring gear in a clockwise direction.

• NOTE: Engine braking is available when this gear is selected.

Power Flow - Reverse Gear

Solenoid Operation

Transmission Selector Lever Position		Solenoid					
		SLC 1	SLC 2	SLC 3	SLB 1	S1	S2
R	Reverse Gear - Less than 11 volts	X	X	-	X	-	-
R	Reverse Gear - More than 11 volts	X	X	X	X	X	X

X = Operating

Clutch and Brake Operation

Transmission Selector Lever Position		Clutch			Brake		One-Way clutch
		C1	C2	C3	B1	B2	F1
R	Reverse Gear - Less than 11 volts	-	X	-	X	-	-
R	Reverse Gear - More than 11 volts	-	-	-	-	X	-

X = Operating

The planetary gear trains are in the following conditions:

- Front planetary gear train
  - Input: Ring gear
  - Locked: Sun gear
  - Output: Carrier
- Rear planetary gear train

- Input: Middle sun gear
- Locked: Carrier
- Output: Ring gear

Front Planetary Gear Train

The input shaft rotates in a clockwise direction, driven by the torque converter. The planetary ring gear rotates clockwise with the input shaft.

The pinion gear rotates clockwise on its axis and orbit. The planetary sun gear is locked by the fluid pump which causes it to press against the planetary ring gear and orbit the sun gear, rotating on its axis. The planetary carrier rotates clockwise with the pinion gear orbit.

Clutch (C3) is activated and rotates clockwise and locks the planetary carrier to the rear planetary middle sun gear.

Rear Planetary Gear Train

The middle sun gear rotates clockwise with the clutch (C3), but at a lower speed than the input shaft. Brake (B2) is activated and locks the planetary carrier. The long pinion gear rotates counter-clockwise which in turn rotates the ring gear counter-clockwise.

The counter drive gear rotates in a counter-clockwise direction with the ring gear at the same speed.

The counter driven gear is rotated in a clockwise direction which in turn drives the differential ring gear in a counter-clockwise direction.

• NOTE: Engine braking is available when this gear is selected.

Power Flow Neutral

Solenoid Operation

Transmission Selector Lever Position		Solenoid					
		SLC 1	SLC 2	SLC 3	SLB 1	S1	S2
N	Neutral	X	X	X	X	-	-

X = Operating

Clutch and Brake Operation

Transmission Selector Lever Position		Clutch			Brake		One-Way clutch
		C1	C2	C3	B1	B2	F1
N	Neutral	-	-	-	-	-	-

X = Operating

In neutral, all the solenoids, except the 3 way solenoids, are energised and the clutches and brakes are all disengaged. This allows rotation from the input shaft to rotate the front planetary gear train without transferring any drive to the differential ring gear.

TOWING FOR RECOVERY

WARNING: If the engine cannot be run whilst the vehicle is being towed, there will be no power assistance for the steering or brakes. This will result in greater effort being required to steer or slow the vehicle, and greatly increased stopping distances.

CAUTION: The vehicle should only be towed for a maximum of 80 km (50 miles), at a maximum speed of 80 km/h (50 mph). Towing for a greater distance, or at a higher speed may result in serious damage to the transmission.

• NOTE: The recommended recovery method is by trailer or recovery vehicle.

Secure the towing attachment from the recovery vehicle to the front towing eye.

Switch on the ignition to ensure that the steering lock is dis-engaged.

• NOTE: Leaving the ignition switched on for extended periods will cause the battery to drain.

Apply the foot brake, and move the selector lever to the neutral 'N' position. With the footbrake still applied, release the park brake. If electrical power to the selector is not available, the emergency release lever on the selector lever can be used to release the interlock solenoid.

The vehicle can be towed a maximum of 80 km (50 miles) at a maximum speed of 80 km/h (50 mph).

Park the vehicle on firm, level ground. Apply the park brake and move the selector lever to the park 'P' position.

Switch off the ignition.

CAUTION: The vehicle cannot be towed in a reverse direction.

Automatic Transmission / Transaxle - Vehicles With: 6-Speed Automatic Transaxle - AWF21 - Transmission Electronic Control SystemVehicles With: 6-Speed Automatic Transaxle - AWF21

Description and Operation

CONTROL DIAGRAM - AW F21 6 SPEED AUTOMATIC TRANSMISSION 2009MY

• NOTE: **A** = Hardwired; **D** = High speed CAN bus; **O** = LIN bus

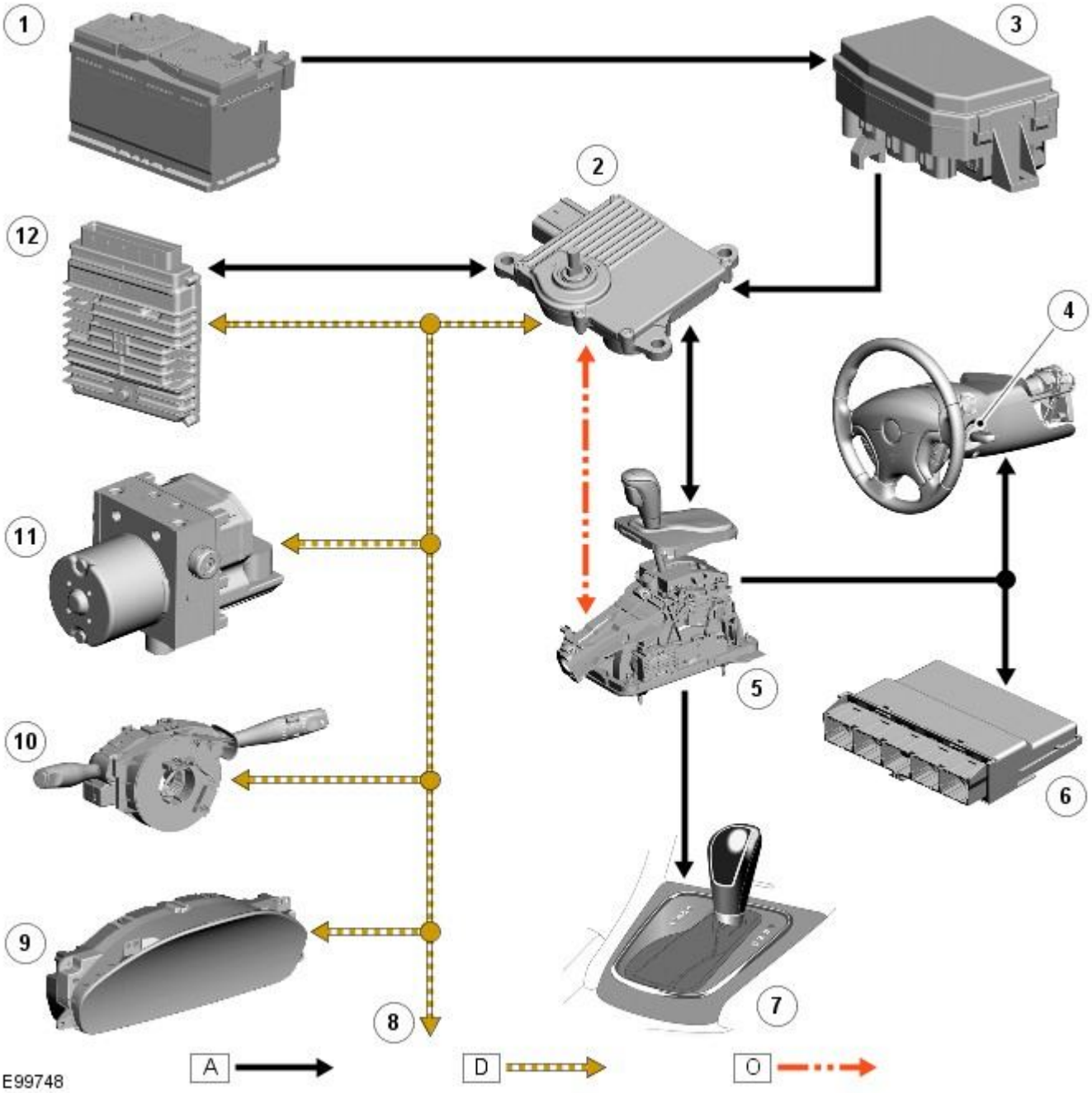

Item	Part Number	Description
1	-	Battery
2	-	Battery Junction Box (BJB)
3	-	Central Junction Box (CJB)
4	-	Transmission Control Module (TCM)
5	-	Selector lever
6	-	Selector lever PRND and M/S Light Emitting Diode (LED) displays
7	-	High speed Controller Area Network (CAN) bus to other vehicle systems
8	-	Instrument cluster
9	-	Steering angle sensor
10	-	Anti-lock Brake System (ABS) module
11	-	Engine Control Module (ECM)

TRANSMISSION CONTROL MODULE (TCM)

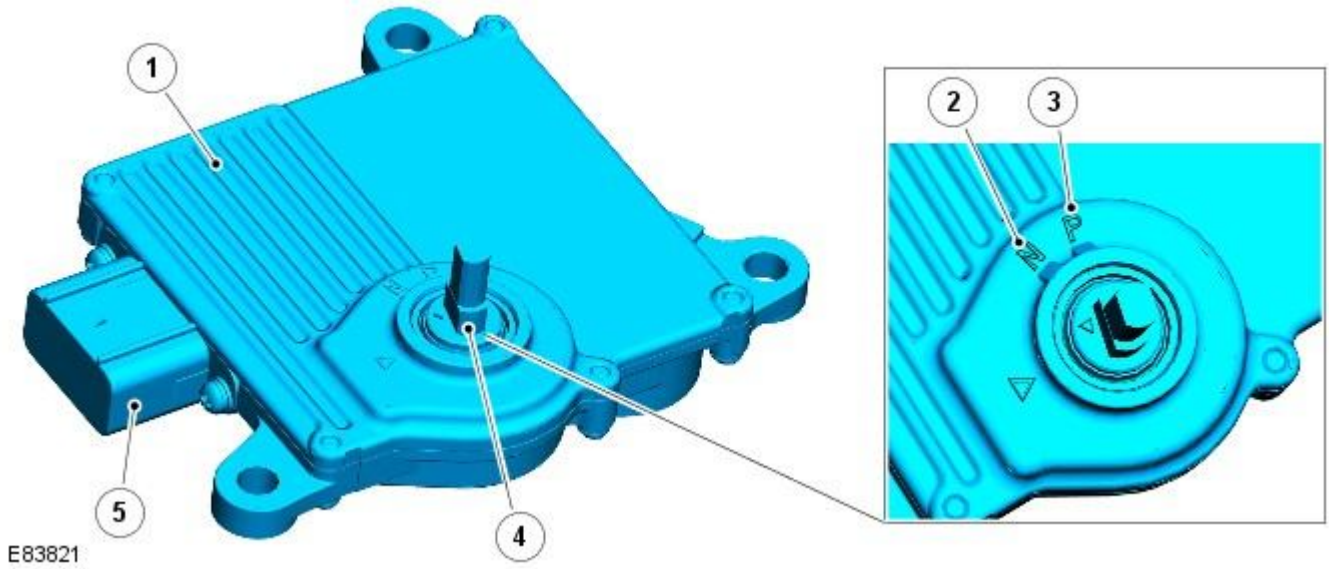

Item	Part Number	Description
1	-	TCM
2	-	'Neutral 'N' position
3	-	Park 'P' position
4	-	Position sensor/manual shaft
5	-	Electrical connector

The TCM (transmission control module) is located on the top of the transmission casing and is connected on the high speed CAN (controller area network) bus to send and receive information to and from other system modules.

The TCM outputs signals to operate the transmission solenoid valves to control the hydraulic operation of the transmission.

The ECM (engine control module) supplies the engine management data on the high speed CAN bus system. The TCM requires engine data to efficiently control the transmission operation, using for example; crankshaft torque, engine speed, accelerator pedal angle, engine temperature etc.

The TCM processes signals from the transmission speed and temperature sensors, ECM and other vehicle systems. From the received signal inputs and pre-programmed data, the module calculates the correct gear, torque converter clutch setting and optimum pressure settings for gear shift and lock-up clutch control.

The steering angle sensor and the ABS (anti-lock brake system) module also supply data to the TCM on the high speed CAN bus system. The TCM uses data from these systems to suspend gear changes when the vehicle is cornering and/or the ABS module is controlling braking or traction control.

The TCM is positioned over the manual shaft which protrudes through an oil seal on the top face of the main casing. The shaft locates in a rotary position sensor and turns the sensor in the appropriate direction when a selection is made using the selector lever. The rotary position sensor is a Hall effect sensor which outputs a specified voltage relating to the selected selector lever position.

The selector lever is connected to the automatic transmission and the rotary position sensor in the transmission by a Bowden cable. Movement of the selector lever moves the position switch via the Bowden cable and the switch position informs the TCM of the selected position; P, R, N or D. The sport and manual +/- 'Jaguar Sequential Shift' switch passes sport or manual selections to the TCM on a LIN (local interconnect network) bus. The TCM outputs appropriate information on the high speed CAN bus which is received by the instrument cluster to display the gear selection information in the message center.

If the TCM or transmission requires replacement, a setting procedure must be performed using a Jaguar approved diagnostic system to allow the TCM to learn the neutral position of the transmission. The TCM uses the neutral position as a reference point for each of the gear positions P, R, N and D.

INSTRUMENT CLUSTER

The instrument cluster is connected to the TCM via the CAN.
For additional information, refer to: Instrument Cluster (413-01 Instrument Cluster, Description and Operation).

Message Center Display

The message center is located in the speedometer. The message center is a LCD (liquid crystal display) to relay vehicle status information to the driver. The message center will display 'SPORT' when sport mode is selected.
For additional information, refer to: Information and Message Center (413-08 Information and Message Center, Description and Operation).

CONTROLLER AREA NETWORK (CAN)

The high speed CAN broadcast bus network is used to connect the powertrain modules. The CAN bus is connected between the following electronic units:

High Speed CAN Bus

- TCM
- Instrument cluster
- Steering angle sensor
- Restraints control module
- ECM
- ABS module.
- Diagnostic socket.

The CAN bus allows a fast exchange of data between modules. The CAN bus comprises two wires which are identified as CAN high (H) and CAN low (L). The two wires are colored green and yellow and are twisted together to minimise electromagnetic interference (noise) produced by the CAN bus messages.

For additional information, refer to: Communications Network (418-00 Module Communications Network, Description and Operation).

In the event of CAN bus failure, the following symptoms may be observed:

- Transmission operates in default mode
- Torque converter lock-up clutch control is disabled.

DRIVING MODES

A number of different driving modes are available. Some can be selected by the driver and some are automatically initiated by the TCM to adapt to different driving conditions.

- Normal
- Sports
- Manual 'Jaguar Sequential Shift'
- Cooling
- Cruise
- Limp home
- Coast
- Fast off recognition
- Uphill and Trailer
- Downhill
- Wide Throttle
- Reverse lock-out

Normal

Normal mode is automatically selected by the TCM when the ignition is switched on. In this mode all automatic and adaptive modes are active. Normal mode uses gear shift and lock-up maps which provides the optimum of fuel consumption, emissions and driveability, depending on the driving style.

If the transmission is operated in sport mode or 'Jaguar Sequential Shift' mode and the selector lever is moved back to the drive 'D' position, then normal mode operation is resumed.

Sports

Sports mode provides enhanced acceleration and responsiveness by the use of sports shift maps. This mode allows the transmission to down shift more readily and hold gears for longer at higher engine speeds.

Manual 'Jaguar Sequential Shift'

Manual 'Jaguar Sequential Shift' mode allows the transmission to operate as a semi-automatic transmission. The driver can change up and down the six forward gears with the freedom of a manual transmission.

Shift maps are provided to protect the engine at high speeds. The TCM will automatically change up to a higher gear ratio to prevent engine overspeed and change down to a lower gear ratio to avoid engine laboring and stalling.

When kick-down is requested the TCM shifts down to the lowest available gear. When the vehicle is stationary, the driver can select 1st, 2nd or 3rd to start off.

When moving from a standstill, upshifts can be pre-selected by making '+' selections with the selector lever for the number of upshifts required. The TCM then performs the requested number of upshifts when appropriate shift points are reached. For example; when moving off in 1st gear, if 3 '+' selections are made in quick succession, the TCM will automatically upshift through the gears to 4th gear as the vehicle accelerates, without any further selections being made.

Cooling

Cooling mode is activated when the TCM detects excessively high transmission fluid or engine coolant temperatures. When this mode is active torque converter lock-up is activated earlier to minimize a further rise in fluid and/or engine coolant temperature and assist fluid cooling.

Cruise

When speed control is activated, the TCM receives a speed control active message on the high speed CAN bus. The TCM activates a speed control map which minimizes up and down shifts.

Cruise mode is active when speed control is selected on and the transmission is in drive 'D' or sport 'S'. Unique cruise maps override the current mode to provide a smooth driving feel and mode reselection.

Limp home

If a transmission fault is detected by the TCM, the TCM adopts a limp home strategy and a message 'TRANSMISSION FAULT LIMITED GEARS AVAILABLE' is displayed in the message center. If the fault has an effect on engine emissions, the MIL (malfunction indicator lamp) in the instrument cluster will also be illuminated.

In limp home mode, P, R and N functions operate normally (if the fault allows these selections) and the TCM locks the transmission in 3rd gear to allow the driver to take the vehicle to a Jaguar dealer or approved repairer. Torque converter lock-up is disabled and reverse-lock-out will not function.

If the vehicle is stopped and subsequently restarted in the limp home mode condition, the TCM operates normally until the fault which caused the condition is detected again.

Coast

Coast mode provides earlier downshifts during coasting dependant on output shaft deceleration rate to improve driveability and refinement by avoiding negative to positive driveline torque reversals transmission during the downshifts.

Fast Off Recognition

Fast off recognition is activated when the TCM detects that the driver has released the accelerator pedal quickly. This is detected by the TCM monitoring for a high level of negative pedal angle from ECM signals on the high speed CAN bus. If this condition is detected, the TCM holds the current gear ratio to allow the driver to complete the manoeuvre without the need for a downshift. The mode can remain active for a predetermined length of time or if the driving style remains passive.

Fast off recognition mode assists vehicle stability and is used in conjunction with a lateral acceleration input during cornering to maintain the current gear until the corner is negotiated.

Uphill and Trailer

Uphill and trailer mode can be active when the transmission is operating in normal or sport `modes. When the vehicle is pulling a trailer or driving up an incline, the TCM detects the increased resistance by monitoring engine torque and speed signals received from the ECM on the high speed CAN bus and also transmission output shaft speed sensor signals. Uphill and trailer mode will provide downshifts to prevent a drop in transmission torque output and maintain driving force.

Downhill

Downhill mode can be active when the transmission is operating in normal or sport modes. When the vehicle is descending an incline the TCM detects a reduction in resistance by monitoring engine torque and speed signals received from the ECM on the high speed CAN bus and also transmission output shaft speed sensor signals. Downhill mode assists engine braking by selecting an appropriate gear reducing the load required on the brakes.

Wide Throttle

Wide open throttle mode operates for part throttle upshifts and kick-down upshifts. It provides consistent wide open throttle upshift performance under all driving conditions. The full engine speed range is used in all driving modes; normal, sport, hill modes and Jaguar Sequential Shift. Compensation is used for delays (hydraulic and electronic) in gear change request to gear change start to provide smooth changes and correct shift point correction.

Reverse Lock-Out

If the selector lever is moved from N to R and the vehicle is travelling forwards, reverse selection is prevented if the vehicle speed is 11 km/h (6.8 mph) or more. When reverse lock-out is activated, the clutch (C3) is released without energizing solenoid (SLC3), preventing the transmission from selecting reverse gear.

TRANSMISSION FAULT STATUS

If the TCM detects a fault with the transmission system, it will enter a default (limp home) mode to prevent further damage to the transmission and allow the vehicle to be driven. If possible reverse gear will be available and also 3rd gear only.

When a fault is detected a high speed CAN message is sent from the TCM and is received by the instrument cluster. The instrument cluster illuminates the MIL (if required) and displays an applicable message in the message center.
For additional information, refer to: Information and Message Center (413-08 Information and Message Center, Description and Operation).

Some transmission faults may not illuminate the MIL or display a fault message, but the driver may notice a reduction in shift quality.

ENGINE SPEED AND TORQUE MONITORING

The ECM constantly supplies the TCM with information on engine speed and torque through messages on the CAN bus. The TCM uses this information to calculate the correct and appropriate timing of shift changes.

If the messages are not received by the ECM, the TCM will implement a back-up strategy to protect the transmission from damage and allow the vehicle to be driven.

In the event of an engine speed or torque signal failure, the transmission will adopt the electrical limp home mode with the transmission operating in a fixed gear.

Automatic Transmission / Transaxle - Vehicles With: 6-Speed Automatic Transaxle - AWF21 - Diagnostic StrategyVehicles With: 6-Speed Automatic Transaxle - AWF21

Diagnosis and Testing

Principles of Operation

For a detailed description of the automatic transmission/transaxle, refer to the relevant Description and Operation sections in the workshop manual.REFER to: Transmission Description (307-01, Description and Operation).

Inspection and Verification

1. **1.** Verify the customer concern.
2. **2.** Visually inspect for obvious signs of mechanical or electrical damage.

Mechanical	Electrical	Hydraulic
• Damaged/stuck shift mechanism • Damaged automatic transmission casing	• Blown fuse(s) • Damaged, loose or corroded connectors • Wiring harness • Transmission Control Module (TCM) • Gear Selection Module (GSM) • Engine Control Module (ECM)	• Fluid level too high/low • Poor condition of fluid • Fluid leak

3. **3.** If an obvious cause for an observed or reported concern is found, correct the cause (if possible) before proceeding to the next step.
4. **4.** If the cause is not visually evident, verify the symptom and refer to the Symptom Chart.

DTC Index

CAUTION: When probing connectors to take measurements in the course of the pinpoint tests, use the adaptor kit, part number 3548-1358-00.

• NOTE: If the control module/transmission is suspect and the vehicle remains under manufacturer warranty, refer to the Warranty Policy and Procedures manual (section B1.2), or determine if any prior approval programme is in operation, prior to the installation of a new module/transmission.

• NOTE: Generic scan tools may not read the codes listed, or may read only five digit codes. Match the five digits from the scan tool to the first five digits of the seven digit code listed to identify the fault (the last two digits give additional information read by the manufacturer approved diagnostic system).

• NOTE: When performing electrical voltage or resistance tests, always use a digital multimeter (DMM) accurate to three decimal places, and with an up-to-date calibration certificate. When testing resistance, always take the resistance of the DMM leads into account.

• NOTE: Check and rectify basic faults before beginning diagnostic routines involving pinpoint tests.

• NOTE: Inspect connectors for signs of water ingress, and pins for damage and/or corrosion.

• NOTE: If DTCs are recorded and, after performing the pinpoint tests, a fault is not present, an intermittent concern may be the cause. Always check for loose connections and corroded terminals.

Service Routines

Carry out the service routines listed below when instructed to do so by the repair 'action' of the DTC Index

1. **1. Vehicle Configuration Main Menu, Configure New Modules, Transmission Control Module:** This routine is used to install software into a new TCM. The routine must be performed if a new TCM has been installed.
2. **2. Vehicle Configuration Main Menu, Configure New Modules, On Demand Self Test:** This routine is used to check that the TCM is installed without any electrical errors. When the routine is activated the TCM will test all outputs for electrical errors. The routine must be performed if the TCM has been separated from the transmission.
3. **3. Vehicle Configuration Main Menu, Configure Existing Modules, Transmission Control Module:** This routine is used to install software into an existing TCM. The routine must be performed if an existing TCM is having its software updated.
4. **4. Vehicle Configuration Main Menu, Special Applications, Transmission Control Module Neutral Learn::** This routine is used to re-calibrate the neutral position. The routine must be performed if the TCM has been separated from the transmission, TCM software is updated or TCM hardware is updated.
5. **5. Vehicle Configuration Main Menu, Special Applications, Clear Self Learning Data:** This routine is used to clear the solenoid adaptation in the TCM. The routine must be performed if the transmission is replaced and TCM is reused.
6. **6. Vehicle Configuration Main Menu, Special Applications, Set Adaption Mode:** This routine is used when the transmission is replaced. When this is done the transmission must be pre adapted before the customer drives the car, otherwise bad shifts might occur.
7. **7. Vehicle Configuration Main Menu, Special Applications, Oil Change Reset:** This routine is used to clear the counter that counts the oil degradation. The data needs to be erased if the oil is exchanged or if the transmission is replaced and the TCM is reused.
8. **8. Vehicle Configuration Main Menu, Special Applications, TCM Adaption Clear:** This routine is used to rest the self learning data in the TCM. The routine must be performed after a software update, if the TCM has been installed to another vehicle or if any mechanical components have been replaced in the transmission.

DTC	Description	Possible Cause	Action
P021868	Transmission Fluid Over temperature Condition	• Event information. System event not caused by the TCM, but requiring the TCM to record this DTC	Check the transmission fluid level and condition. Check the transmission fluid cooler/hoses for signs of obstruction, damage, blockage. Replace as required. Check the engine cooling system and engine cooling fans operation. Suspect the TCM/transmission, check

DTC	Description	Possible Cause	Action
		• Transmission fluid level low • Transmission fluid cooler/hoses are obstructed, damaged, blocked • Mechanical fault in the transmission • Engine cooling system failure	and install a new TCM/transmission as required, refer to the new module/component installation note at the top of the DTC Index. Refer to service routines at the top of the DTC Index and carry out service routines as required using the manufacturer approved diagnostic system
P050000	Vehicle Speed Sensor A	• Vehicle speed sensor circuit SP+ or SP- open circuit • Vehicle speed sensor failure • Vehicle speed sensor circuit SP+ short to ground • Internal failure in TCM	Carry out any diagnostic pinpoint tests associated with this DTC using the manufacturer approved diagnostic system. Suspect the TCM, check and install a new TCM as required, refer to the new module/component installation note at the top of the DTC Index. Refer to service routines at the top of the DTC Index and carry out service routines as required using the manufacturer approved diagnostic system
P056100	System Voltage Unstable	• Battery voltage too low • Battery voltage too high • High contact resistance or oxidation in the connector on the TCM or the transmission • Battery charger with incorrect voltage has been used • Charging system failure • Internal failure in TCM	Carry out any diagnostic pinpoint tests associated with this DTC using the manufacturer approved diagnostic system. Refer to the electrical guides and check BAT+ circuit for correct battery voltage, open circuit, oxidation in connector terminals. Check the vehicle charging system. Suspect the TCM, check and install a new TCM as required, refer to the new module/component installation note at the top of the DTC Index. Refer to service routines at the top of the DTC Index and carry out service routines as required using the manufacturer approved diagnostic system
P056200	System Voltage Low	• Battery voltage too low • High contact resistance or oxidation in the connector on the TCM or the transmission • Battery charger with incorrect voltage has been used • Charging system failure • Internal failure in TCM	Carry out any diagnostic pinpoint tests associated with this DTC using the manufacturer approved diagnostic system. Refer to the electrical guides and check BAT+ circuit for correct battery voltage, open circuit, oxidation in connector terminals. Check the vehicle charging system. Suspect the TCM, check and install a new TCM as required, refer to the new module/component installation note at the top of the DTC Index. Refer to service routines at the top of the DTC Index and carry out service routines as required using the manufacturer approved diagnostic system
P060100	Internal Control Module Memory Check Sum Error	• Internal failure in TCM	Using the manufacturer approved diagnostic system select the vehicle configuration main menu, select configure existing modules menu and programme the transmission control module. Suspect the TCM, check and install a new TCM as required, refer to the new module/component installation note at the top of the DTC Index. Refer to service routines at the top of the DTC Index and carry out service routines as required using the manufacturer approved diagnostic system
P060300	Internal Control Module Keep Alive Memory (KAM) Error	• Internal failure in TCM	Using the manufacturer approved diagnostic system select the vehicle configuration main menu, select configure existing modules menu and programme the transmission control module. Suspect the TCM, check and install a new TCM as required, refer to the new module/component installation note at the top of the DTC Index. Refer to service routines at the top of the DTC Index and carry out service routines as required using the manufacturer approved diagnostic system
P060400	Internal Control Module Random Access Memory (RAM) Error	• Internal failure in TCM	Using the manufacturer approved diagnostic system select the vehicle configuration main menu, select configure existing modules menu and programme the transmission control module. Suspect the TCM, check and install a new TCM as required, refer to the new module/component installation note at the top of the DTC Index. Refer to service routines at the top of the DTC Index and carry out service routines as required using the manufacturer approved diagnostic system
P060500	Internal Control Module Read Only Memory (ROM) Error	• Internal failure in TCM	Using the manufacturer approved diagnostic system select the vehicle configuration main menu, select configure existing modules menu and programme the transmission control module. Suspect the TCM, check and install a new TCM as required, refer to the new module/component installation note at the top of the DTC Index. Refer to service routines at the top of the DTC Index and carry out service routines as required using the manufacturer approved diagnostic system
P062F00	Internal Control Module EEPROM Error	• Internal failure in TCM	Using the manufacturer approved diagnostic system select the vehicle configuration main menu, select configure existing modules menu and programme the transmission control module. Suspect the TCM, check and install a new TCM as required, refer to the new module/component installation note at the top of the DTC Index. Refer to service routines at the top of the DTC Index and carry out service routines as required using the manufacturer approved diagnostic system
P070500	Transmission Range Sensor A Circuit (PRNDL Input)	• Incorrect adjustment of gear selector lever cable • Incorrect adjustment of gear position sensor • Internal failure in TCM	Check the adjustment of the gear selector lever cable. Carry out neutral learn service routine. Suspect the TCM, check and install a new TCM as required, refer to the new module/component installation note at the top of the DTC Index. Refer to service routines at the top of the DTC Index and carry out service routines as required using the manufacturer approved diagnostic system
P070900	Transmission Range Sensor A Circuit Intermittent	• Incorrect adjustment of gear selector lever cable • Incorrect adjustment of gear position sensor • Internal failure in TCM	Check the adjustment of the gear selector lever cable. Carry out neutral learn service routine. Suspect the TCM, check and install a new TCM as required, refer to the new module/component installation note at the top of the DTC Index. Refer to service routines at the top of the DTC Index and carry out service routines as required using the manufacturer approved diagnostic system
P071100	Transmission Fluid Temperature Sensor A Circuit Range/Performance	• High contact resistance in the connector terminals • Failure of oil temperature sensor • Internal failure in TCM	Check for high contact resistance in the connector terminals between the TCM and transmission. Suspect the TCM, check and install a new TCM as required, refer to the new module/component installation note at the top of the DTC Index. Suspect the transmission, check and install a new transmission as required, refer to the new

DTC	Description	Possible Cause	Action
			module/component installation note at the top of the DTC Index. Refer to service routines at the top of the DTC Index and carry out service routines as required using the manufacturer approved diagnostic system
P071200	Transmission Fluid Temperature Sensor A Circuit Low	• Short to ground on the OT circuit of the oil temperature sensor • Failure of oil temperature sensor • Internal failure in TCM	Suspect the transmission, check and install a new transmission as required, refer to the new module/component installation note at the top of the DTC Index. Suspect the TCM, check and install a new TCM as required, refer to the new module/component installation note at the top of the DTC Index. Refer to service routines at the top of the DTC Index and carry out service routines as required using the manufacturer approved diagnostic system
P071300	Transmission Fluid Temperature Sensor A Circuit High	• High contact resistance in the connector terminals • Short to power on the OT circuit of the oil temperature sensor • Open circuit on the OT circuit of the oil temperature sensor • Failure of oil temperature sensor • Internal failure in TCM	Check for high contact resistance in the connector terminals between the TCM and transmission. Suspect the TCM, check and install a new TCM as required, refer to the new module/component installation note at the top of the DTC Index. Suspect the transmission, check and install a new transmission as required, refer to the new module/component installation note at the top of the DTC Index. Refer to service routines at the top of the DTC Index and carry out service routines as required using the manufacturer approved diagnostic system
P071500	Turbine/Input Shaft Speed Sensor A Circuit	• Short to power on the NIN+ circuit of the input speed sensor • Failure of input speed sensor • Internal failure in TCM	Suspect the TCM, check and install a new TCM as required, refer to the new module/component installation note at the top of the DTC Index. Suspect the transmission, check and install a new transmission as required, refer to the new module/component installation note at the top of the DTC Index. Refer to service routines at the top of the DTC Index and carry out service routines as required using the manufacturer approved diagnostic system
P071600	Turbine/Input Shaft Speed Sensor A Circuit Range/Performance	• High contact resistance in the connector terminals • Input speed sensor not correctly installed • Failure of input speed sensor • Internal failure in TCM	Check for high contact resistance in the connector terminals between the TCM and transmission. Check input speed sensor installed correctly. Suspect the TCM, check and install a new TCM as required, refer to the new module/component installation note at the top of the DTC Index. Suspect the transmission, check and install a new transmission as required, refer to the new module/component installation note at the top of the DTC Index. Refer to service routines at the top of the DTC Index and carry out service routines as required using the manufacturer approved diagnostic system
P071800	Turbine/Input Shaft Speed Sensor A Circuit Intermittent	• High contact resistance in the connector terminals • Input speed sensor not correctly installed • Failure of input speed sensor • Internal failure in TCM	Check for high contact resistance in the connector terminals between the TCM and transmission. Check input speed sensor installed correctly. Suspect the TCM, check and install a new TCM as required, refer to the new module/component installation note at the top of the DTC Index. Suspect the transmission, check and install a new transmission as required, refer to the new module/component installation note at the top of the DTC Index. Refer to service routines at the top of the DTC Index and carry out service routines as required using the manufacturer approved diagnostic system
P072000	Output Shaft Speed Sensor Circuit	• Short to power SP+ circuit of vehicle speed sensor • Failure of vehicle speed sensor • Internal failure in TCM	Suspect the TCM, check and install a new TCM as required, refer to the new module/component installation note at the top of the DTC Index. Suspect the transmission, check and install a new transmission as required, refer to the new module/component installation note at the top of the DTC Index. Refer to service routines at the top of the DTC Index and carry out service routines as required using the manufacturer approved diagnostic system
P072100	Output Shaft Speed Sensor Circuit Range/Performance	• High contact resistance in the connector terminals • Vehicle speed sensor not correctly installed • Failure of vehicle speed sensor • The wheel radius does not agree with the wheel radius programmed in the vehicle's configuration file • Internal failure in TCM	Check the correct wheels and tires are installed. Using the manufacturer approved diagnostic system go to vehicle setup and configuration tab, add/remove accessories and carry out, tire size rolling circumference test. Check for high contact resistance in the connector terminals between the TCM and transmission. Check vehicle speed sensor installed correctly. Suspect the TCM, check and install a new TCM as required, refer to the new module/component installation note at the top of the DTC Index. Suspect the transmission, check and install a new transmission as required, refer to the new module/component installation note at the top of the DTC Index. Refer to service routines at the top of the DTC Index and carry out service routines as required using the manufacturer approved diagnostic system
P072200	Output Shaft Speed Sensor Circuit No Signal	• High contact resistance in the connector terminals • Failure of vehicle speed sensor • Internal failure in TCM	Check for high contact resistance in the connector terminals between the TCM and transmission. Suspect the TCM, check and install a new TCM as required, refer to the new module/component installation note at the top of the DTC Index. Suspect the transmission, check and install a new transmission as required, refer to the new module/component installation note at the top of the DTC Index. Refer to service routines at the top of the DTC Index and carry out service routines as required using the manufacturer approved diagnostic system
P072300	Output Shaft Speed Sensor Circuit Intermittent	• High contact resistance in the connector terminals • Vehicle speed sensor not correctly installed • Failure of vehicle speed sensor • Internal failure in TCM	Check for high contact resistance in the connector terminals between the TCM and transmission. Check vehicle speed sensor installed correctly. Suspect the TCM, check and install a new TCM as required, refer to the new module/component installation note at the top of the DTC Index. Suspect the transmission, check and install a new transmission as required, refer to the new module/component installation note at the top of the DTC Index. Refer to service routines at the top of the DTC Index and carry out service routines as required using the manufacturer approved diagnostic system
P072500	Engine Speed Input Circuit	• Open circuit on CAN circuit between ECM and TCM • Engine speed signal has not been updated • Engine speed signal quality factor has a failure value	Refer to the electrical guides and check CAN circuit for open circuit, short to ground between ECM and TCM. Check ECM for DTCs and refer to relevant DTC Index

DTC	Description	Possible Cause	Action
		• Short to ground on CAN circuit between ECM and TCM	
P072900	Gear 6 Incorrect Ratio	• Incorrectly regulating solenoid • Mechanical failure in transmission • Transmission components worn causing low system fluid pressure and slip	Suspect the transmission, check and install a new transmission as required, refer to the new module/component installation note at the top of the DTC Index. Refer to service routines at the top of the DTC Index and carry out service routines as required using the manufacturer approved diagnostic system
P073000	Incorrect Gear Ratio	• Internal malfunction in the transmission	Suspect the transmission, check and install a new transmission as required, refer to the new module/component installation note at the top of the DTC Index. Refer to service routines at the top of the DTC Index and carry out service routines as required using the manufacturer approved diagnostic system
P073095	Incorrect Gear Ratio	• Incorrect final drive installed • Incorrect assembly. The TCM has detected that the transmission has the incorrect gear ratio	Suspect the final drive unit, check and install a new transmission as required, refer to the new module/component installation note at the top of the DTC Index. Refer to service routines at the top of the DTC Index and carry out service routines as required using the manufacturer approved diagnostic system
P073100	Gear 1 Incorrect Ratio	• Incorrectly regulating solenoid • Mechanical failure in transmission • Transmission components worn causing low system fluid pressure and slip	Suspect the transmission, check and install a new transmission as required, refer to the new module/component installation note at the top of the DTC Index. Refer to service routines at the top of the DTC Index and carry out service routines as required using the manufacturer approved diagnostic system
P073200	Gear 2 Incorrect Ratio	• Incorrectly regulating solenoid • Mechanical failure in transmission • Transmission components worn causing low system fluid pressure and slip	Suspect the transmission, check and install a new transmission as required, refer to the new module/component installation note at the top of the DTC Index. Refer to service routines at the top of the DTC Index and carry out service routines as required using the manufacturer approved diagnostic system
P073300	Gear 3 Incorrect Ratio	• Incorrectly regulating solenoid • Mechanical failure in transmission • Transmission components worn causing low system fluid pressure and slip	Suspect the transmission, check and install a new transmission as required, refer to the new module/component installation note at the top of the DTC Index. Refer to service routines at the top of the DTC Index and carry out service routines as required using the manufacturer approved diagnostic system
P073400	Gear 4 Incorrect Ratio	• Incorrectly regulating solenoid • Mechanical failure in transmission • Transmission components worn causing low system fluid pressure and slip	Suspect the transmission, check and install a new transmission as required, refer to the new module/component installation note at the top of the DTC Index. Refer to service routines at the top of the DTC Index and carry out service routines as required using the manufacturer approved diagnostic system
P073500	Gear 5 Incorrect Ratio	• Incorrectly regulating solenoid • Mechanical failure in transmission • Transmission components worn causing low system fluid pressure and slip	Suspect the transmission, check and install a new transmission as required, refer to the new module/component installation note at the top of the DTC Index. Refer to service routines at the top of the DTC Index and carry out service routines as required using the manufacturer approved diagnostic system
P073600	Reverse Incorrect Ratio	• Mechanical failure in transmission • Transmission components worn causing low system fluid pressure and slip • Internal failure in TCM	Suspect the transmission, check and install a new transmission as required, refer to the new module/component installation note at the top of the DTC Index. Suspect the TCM, check and install a new TCM as required, refer to the new module/component installation note at the top of the DTC Index. Refer to service routines at the top of the DTC Index and carry out service routines as required using the manufacturer approved diagnostic system
P073E64	Unable to Engage Reverse	• Signal plausibility failure. The TCM has detected a plausibility failure • High contact resistance in the connector terminals • C3 pressure control SLC3 not operating when reverse gear is selected • Mechanical failure in transmission	Check for high contact resistance in the connector terminals between the TCM and transmission. Suspect the TCM, check and install a new TCM as required, refer to the new module/component installation note at the top of the DTC Index. Suspect the transmission, check and install a new transmission as required, refer to the new module/component installation note at the top of the DTC Index. Refer to service routines at the top of the DTC Index and carry out service routines as required using the manufacturer approved diagnostic system
P073F00	Unable to Engage Gear 1	• High contact resistance in the connector terminals • B1 pressure control SLB1 solenoid has stuck in off or on position • C2 pressure control SLC2 solenoid has stuck in off or on position • C3 pressure control SLC3 solenoid has stuck in off or on position • Mechanical failure in transmission	Check for high contact resistance in the connector terminals between the TCM and transmission. Suspect the TCM, check and install a new TCM as required, refer to the new module/component installation note at the top of the DTC Index. Suspect the transmission, check and install a new transmission as required, refer to the new module/component installation note at the top of the DTC Index. Refer to service routines at the top of the DTC Index and carry out service routines as required using the manufacturer approved diagnostic system

DTC	Description	Possible Cause	Action
P074100	Torque Converter Clutch Solenoid Circuit Performance/Stuck Off	• High contact resistance in the connector terminals • Open circuit of SLU circuit of lock up control solenoid • Failure of SLU lock up solenoid • SLU lock up solenoid stuck in closed position • Internal failure in TCM	Check for high contact resistance in the connector terminals between the TCM and transmission. Suspect the TCM, check and install a new TCM as required, refer to the new module/component installation note at the top of the DTC Index. Suspect the transmission, check and install a new transmission as required, refer to the new module/component installation note at the top of the DTC Index. Refer to service routines at the top of the DTC Index and carry out service routines as required using the manufacturer approved diagnostic system
P074200	Torque Converter Clutch Solenoid Circuit Stuck On	• High contact resistance in the connector terminals • Open circuit of SLU circuit of lock up control solenoid • Failure of SLU lock up solenoid • Internal failure in TCM	Check for high contact resistance in the connector terminals between the TCM and transmission. Suspect the TCM, check and install a new TCM as required, refer to the new module/component installation note at the top of the DTC Index. Suspect the transmission, check and install a new transmission as required, refer to the new module/component installation note at the top of the DTC Index. Refer to service routines at the top of the DTC Index and carry out service routines as required using the manufacturer approved diagnostic system
P074468	Torque Converter Clutch Solenoid Circuit Intermittent	• Event information. System event not caused by the TCM, but requiring the TCM to record this DTC • Engine stall condition detected • Mechanical fault in engine	Check for engine related DTCs. Rectify as required
P074A00	Unable to Engage Gear 2	• High contact resistance in the connector terminals • B1 pressure control SLB1 solenoid has stuck in off position • C1 pressure control SLC1 solenoid has stuck in off position • C1 pressure control SLC1 solenoid has stuck in on position • C2 pressure control SLC2 solenoid has stuck in on position • C3 pressure control SLC3 solenoid has stuck in on position • Mechanical failure in transmission	Check for high contact resistance in the connector terminals between the TCM and transmission. Suspect the TCM, check and install a new TCM as required, refer to the new module/component installation note at the top of the DTC Index. Suspect the transmission, check and install a new transmission as required, refer to the new module/component installation note at the top of the DTC Index. Refer to service routines at the top of the DTC Index and carry out service routines as required using the manufacturer approved diagnostic system
P074B00	Unable to Engage Gear 3	• High contact resistance in the connector terminals • C1 pressure control SLC1 solenoid has stuck in off position • C3 pressure control SLC3 solenoid has stuck in off position • C2 pressure control SLC2 solenoid has stuck in on position • Mechanical failure in transmission	Check for high contact resistance in the connector terminals between the TCM and transmission. Suspect the TCM, check and install a new TCM as required, refer to the new module/component installation note at the top of the DTC Index. Suspect the transmission, check and install a new transmission as required, refer to the new module/component installation note at the top of the DTC Index. Refer to service routines at the top of the DTC Index and carry out service routines as required using the manufacturer approved diagnostic system
P074C00	Unable to Engage Gear 4	• High contact resistance in the connector terminals • C1 pressure control SLC1 solenoid has stuck in off position • C2 pressure control SLC2 solenoid has stuck in off position • C3 pressure control SLC3 solenoid has stuck in on position • B1 pressure control SLB1 solenoid has stuck in on position • Mechanical failure in transmission	Check for high contact resistance in the connector terminals between the TCM and transmission. Suspect the TCM, check and install a new TCM as required, refer to the new module/component installation note at the top of the DTC Index. Suspect the transmission, check and install a new transmission as required, refer to the new module/component installation note at the top of the DTC Index. Refer to service routines at the top of the DTC Index and carry out service routines as required using the manufacturer approved diagnostic system
P074D00	Unable to Engage Gear 5	• High contact resistance in the connector terminals • C2 pressure control SLC2 solenoid has stuck in off position • C3 pressure control SLC3 solenoid has stuck in off position • C1 pressure control SLC1 solenoid has stuck in on position • B1 pressure control SLB1 solenoid has stuck in on position	Check for high contact resistance in the connector terminals between the TCM and transmission. Suspect the TCM, check and install a new TCM as required, refer to the new module/component installation note at the top of the DTC Index. Suspect the transmission, check and install a new transmission as required, refer to the new module/component installation note at the top of the DTC Index. Refer to service routines at the top of the DTC Index and carry out service routines as required using the manufacturer approved diagnostic system

DTC	Description	Possible Cause	Action
		• Mechanical failure in transmission	
P074E00	Unable to Engage Gear 6	• High contact resistance in the connector terminals • C2 pressure control SLC2 solenoid has stuck in off position • B1 pressure control SLB1 solenoid has stuck in off position • C1 pressure control SLC1 solenoid has stuck in on position • C3 pressure control SLC3 solenoid has stuck in on position • Mechanical failure in transmission	Check for high contact resistance in the connector terminals between the TCM and transmission. Suspect the TCM, check and install a new TCM as required, refer to the new module/component installation note at the top of the DTC Index. Suspect the transmission, check and install a new transmission as required, refer to the new module/component installation note at the top of the DTC Index. Refer to service routines at the top of the DTC Index and carry out service routines as required using the manufacturer approved diagnostic system
P077700	Pressure Control Solenoid B Stuck On	• S2 shift solenoid has jammed in the on position • Hydraulic fault in the transmission	Suspect the transmission, check and install a new transmission as required, refer to the new module/component installation note at the top of the DTC Index. Refer to service routines at the top of the DTC Index and carry out service routines as required using the manufacturer approved diagnostic system
P081442	Transmission Range Display Circuit	• General memory failure • Internal fault in GSM	Suspect the GSM, check and install a new GSM as required, refer to the new module/component installation note at the top of the DTC Index
P081449	Transmission Range Display Circuit	• Internal electronic failure. The TCM has detected an internal circuit failure • Internal fault in GSM	Suspect the GSM, check and install a new GSM as required, refer to the new module/component installation note at the top of the DTC Index
P081711	Starter Disable Circuit / Open	• Circuit short to ground. The TCM has detected a ground measurement for a period longer than expected or has detected a ground measurement when another value was expected • High contact resistance in the connector terminals • Start lock STLK circuit short to ground • Internal failure in TCM • Internal failure in ECM	Carry out any diagnostic pinpoint tests associated with this DTC using the manufacturer approved diagnostic system. Refer to the electrical guides and check Start lock STLK circuit for high resistance in connector terminals, short to ground. Suspect the TCM, check and install a new TCM as required, refer to the new module/component installation note at the top of the DTC Index. Refer to service routines at the top of the DTC Index and carry out service routines as required using the manufacturer approved diagnostic system
P081712	Starter Disable Circuit / Open	• Circuit short to power. The TCM has detected a vehicle power measurement for a period longer than expected or has detected a vehicle power measurement when another value was expected • Start lock STLK circuit short to power • Internal failure in TCM • Internal failure in ECM	Carry out any diagnostic pinpoint tests associated with this DTC using the manufacturer approved diagnostic system. Refer to the electrical guides and check Start lock STLK circuit for short to power. Suspect the TCM, check and install a new TCM as required, refer to the new module/component installation note at the top of the DTC Index. Refer to service routines at the top of the DTC Index and carry out service routines as required using the manufacturer approved diagnostic system
P081C49	Park Input Circuit	• Internal electronic failure. The GSM has detected an internal circuit failure • Internal fault in GSM	Suspect the GSM, check and install a new GSM as required, refer to the new module/component installation note at the top of the DTC Index
P082601	Up and Down Switch Circuit	• General electrical failure • GSM not working (tiptronic mode)	Suspect the GSM, check and install a new GSM as required, refer to the new module/component installation note at the top of the DTC Index
P085A00	Gear Shift Module B Communication Circuit	• LIN communication line failure • Internal fault in GSM	Refer to the electrical guides and check LIN circuit for open circuit, short to ground, short to power. Suspect the GSM, check and install a new GSM as required, refer to the new module/component installation note at the top of the DTC Index
P086011	Gear Shift Module A Communication Circuit	• Circuit short to ground. The TCM has detected a ground measurement for a period longer than expected or has detected a ground measurement when another value was expected • Short to ground on the LIN communication circuit between the TCM and GSM • Internal failure in GSM • Internal failure in TCM	Carry out any diagnostic pinpoint tests associated with this DTC using the manufacturer approved diagnostic system. Refer to the electrical guides and check LIN circuit between TCM and GSM for high resistance in connector terminals, short to ground. Suspect the GSM, check and install a new GSM as required, refer to the new module/component installation note at the top of the DTC Index. Suspect the TCM, check and install a new TCM as required, refer to the new module/component installation note at the top of the DTC Index. Refer to service routines at the top of the DTC Index and carry out service routines as required using the manufacturer approved diagnostic system
P086012	Gear Shift Module A Communication Circuit	• Circuit short to power. The TCM has detected a vehicle power measurement for a period longer than expected or has detected a vehicle power measurement when another	Carry out any diagnostic pinpoint tests associated with this DTC using the manufacturer approved diagnostic system. Refer to the electrical guides and check LIN circuit between TCM and GSM for short to power. Suspect the GSM, check and install a new GSM as required, refer to the new module/component installation note at the top of the DTC Index. Suspect the TCM, check and install a new TCM as required,

DTC	Description	Possible Cause	Action
		value was expected • Short to power on the LIN communication circuit between the TCM and GSM • Internal failure in GSM • Internal failure in TCM	refer to the new module/component installation note at the top of the DTC Index. Refer to service routines at the top of the DTC Index and carry out service routines as required using the manufacturer approved diagnostic system
P086013	Gear Shift Module A Communication Circuit	• Circuit open. The TCM has determined an open circuit via lack of bias voltage, low current flow, no change in the state of an input in response to an output • High contact resistance in the connector terminals • Oxidation in the connector terminals • Open circuit on the power supply to the GSM • Open circuit on the ground supply to the GSM • Open circuit on the LIN communication circuit between the TCM and GSM • Internal failure in GSM • Internal failure in TCM	Carry out any diagnostic pinpoint tests associated with this DTC using the manufacturer approved diagnostic system. Refer to the electrical guides and check LIN circuit between TCM and GSM for open circuit. Check for high contact resistance in the connector terminals. Check for oxidation in the connector terminals. Check for open circuit on the power supply to the GSM. Check for open circuit on the ground supply to the GSM. Suspect the GSM, check and install a new GSM as required, refer to the new module/component installation note at the top of the DTC Index. Suspect the TCM, check and install a new TCM as required, refer to the new module/component installation note at the top of the DTC Index. Refer to service routines at the top of the DTC Index and carry out service routines as required using the manufacturer approved diagnostic system
P086087	Gear Shift Module A Communication Circuit	• Missing message. The TCM has not received one or more expected messages from the GSM. • Internal failure in GSM • Internal failure in TCM	Carry out any diagnostic pinpoint tests associated with this DTC using the manufacturer approved diagnostic system. Refer to the electrical guides and check LIN circuit between TCM and GSM for open circuit. Suspect the GSM, check and install a new GSM as required, refer to the new module/component installation note at the top of the DTC Index. Suspect the TCM, check and install a new TCM as required, refer to the new module/component installation note at the top of the DTC Index. Refer to service routines at the top of the DTC Index and carry out service routines as required using the manufacturer approved diagnostic system
P088513	TCM Power Relay Control Circuit /Open	• Circuit open. The TCM has determined an open circuit via lack of bias voltage, low current flow, no change in the state of an input in response to an output • Open circuit on the VSUP power circuit between the TCM and GSM • Internal failure in GSM • Internal failure in TCM	Carry out any diagnostic pinpoint tests associated with this DTC using the manufacturer approved diagnostic system. Refer to the electrical guides and check VSUP power circuit between TCM and GSM for open circuit. Suspect the GSM, check and install a new GSM as required, refer to the new module/component installation note at the top of the DTC Index. Suspect the TCM, check and install a new TCM as required, refer to the new module/component installation note at the top of the DTC Index. Refer to service routines at the top of the DTC Index and carry out service routines as required using the manufacturer approved diagnostic system
P088611	TCM Power Relay Control Circuit Low	• Circuit short to ground. The TCM has detected a ground measurement for a period longer than expected or has detected a ground measurement when another value was expected • High contact resistance in the connector terminals • Short to ground on the VSUP power circuit between the TCM and GSM • Internal failure in GSM • Internal failure in TCM	Carry out any diagnostic pinpoint tests associated with this DTC using the manufacturer approved diagnostic system. Refer to the electrical guides and check VSUP power circuit between TCM and GSM for high resistance in connector terminals, short to ground. Suspect the GSM, check and install a new GSM as required, refer to the new module/component installation note at the top of the DTC Index. Suspect the TCM, check and install a new TCM as required, refer to the new module/component installation note at the top of the DTC Index. Refer to service routines at the top of the DTC Index and carry out service routines as required using the manufacturer approved diagnostic system
P089500	Shift Time Too Short	• Mechanical fault in transmission • Hydraulic fault in transmission • Internal failure in TCM	Suspect the TCM, check and install a new TCM as required, refer to the new module/component installation note at the top of the DTC Index. Suspect the transmission, check and install a new transmission as required, refer to the new module/component installation note at the top of the DTC Index. Refer to service routines at the top of the DTC Index and carry out service routines as required using the manufacturer approved diagnostic system
P089600	Shift Time Too Long	• Mechanical fault in transmission • Hydraulic fault in transmission • Internal failure in TCM	Suspect the TCM, check and install a new TCM as required, refer to the new module/component installation note at the top of the DTC Index. Suspect the transmission, check and install a new transmission as required, refer to the new module/component installation note at the top of the DTC Index. Refer to service routines at the top of the DTC Index and carry out service routines as required using the manufacturer approved diagnostic system
P089709	Transmission Fluid Deteriorated	• Transmission fluid is degraded, exerted to very hard strain and high ambient temperatures and is no longer serviceable	Replace the transmission fluid. Refer to service routines at the top of the DTC Index and carry out service routines as required using the manufacturer approved diagnostic system
P092813	Gear Shift Lock Solenoid/Actuator Circuit A / Open	• Circuit open. The TCM has determined an open circuit via lack of bias voltage, low current flow, no change in the state of an input in response to an output • High contact resistance in the	Refer to the electrical guides and check the SFL shiftlock circuit for open circuit, high resistance, corrosion, oxidation of connector terminals. Refer to the electrical guides and check the ground circuit between the GSM and ground stud. Suspect the GSM, check and install a new GSM as required, refer to the new module/component installation note at the top of the DTC Index

DTC	Description	Possible Cause	Action
		connector terminals • Open circuit on the SFL shiftlock circuit between the TCM and GSM • Open circuit on the ground circuit between the GSM and ground stud • Internal failure in GSM	
P093011	Gear Shift Lock Solenoid/Actuator Circuit A Low	• Circuit short to ground. The TCM has detected a ground measurement for a period longer than expected or has detected a ground measurement when another value was expected • Short to ground on the SFL shiftlock circuit between the TCM and GSM • Failure of the shiftlock solenoid • Internal failure in GSM	Refer to the electrical guides and check the SFL shiftlock circuit for short to ground. Suspect the GSM, check and install a new GSM as required, refer to the new module/component installation note at the top of the DTC Index
P093112	Gear Shift Lock Solenoid/Actuator Circuit A High	• Circuit short to power. The TCM has detected a vehicle power measurement for a period longer than expected or has detected a vehicle power measurement when another value was expected • Short to power on the SFL shiftlock circuit between the TCM and GSM • Internal failure in GSM	Refer to the electrical guides and check the SFL shiftlock circuit for short to power. Suspect the GSM, check and install a new GSM as required, refer to the new module/component installation note at the top of the DTC Index
P096000	Pressure Control Solenoid A Control Circuit / Open	• High contact resistance in the connector terminals between TCM and transmission • open circuit of internal wiring for SLT control signal circuit • open circuit of internal wiring for SLT ground signal circuit • SLT line pressure control solenoid no operation	Check the terminals for corrosion, oxidation between TCM and transmission. Suspect the TCM, check and install a new TCM as required, refer to the new module/component installation note at the top of the DTC Index. Suspect the transmission, check and install a new transmission as required, refer to the new module/component installation note at the top of the DTC Index. Refer to service routines at the top of the DTC Index and carry out service routines as required using the manufacturer approved diagnostic system
P096100	Pressure Control Solenoid A Control Circuit Range/Performance	• High contact resistance in the connector terminals between TCM and transmission • open circuit of internal wiring for SLT control signal circuit • open circuit of internal wiring for SLT ground signal circuit • SLT line pressure control solenoid no operation • SLT line pressure control solenoid stuck	Check the terminals for corrosion, oxidation between TCM and transmission. Suspect the TCM, check and install a new TCM as required, refer to the new module/component installation note at the top of the DTC Index. Suspect the transmission, check and install a new transmission as required, refer to the new module/component installation note at the top of the DTC Index. Refer to service routines at the top of the DTC Index and carry out service routines as required using the manufacturer approved diagnostic system
P096300	Pressure Control Solenoid A Control Circuit High	• Short to power of internal wiring for SLT line pressure solenoid control signal circuit • SLT line pressure control solenoid no operation • Internal failure in TCM	Suspect the TCM, check and install a new TCM as required, refer to the new module/component installation note at the top of the DTC Index. Suspect the transmission, check and install a new transmission as required, refer to the new module/component installation note at the top of the DTC Index. Refer to service routines at the top of the DTC Index and carry out service routines as required using the manufacturer approved diagnostic system
P096400	Pressure Control Solenoid B Control Circuit / Open	• High contact resistance in the connector terminals between TCM and transmission • open circuit of internal wiring for SLU control signal circuit • SLU lock up control solenoid no operation • Internal failure in TCM	Check the terminals for corrosion, oxidation between TCM and transmission. Suspect the TCM, check and install a new TCM as required, refer to the new module/component installation note at the top of the DTC Index. Suspect the transmission, check and install a new transmission as required, refer to the new module/component installation note at the top of the DTC Index. Refer to service routines at the top of the DTC Index and carry out service routines as required using the manufacturer approved diagnostic system
P096500	Pressure Control Solenoid B Control Circuit Range/Performance	• High contact resistance in the connector terminals between TCM and transmission • open circuit of internal wiring for SLU control signal circuit • SLU lock up control solenoid no operation • SLU lock up control solenoid stuck • Internal failure in TCM	Check the terminals for corrosion, oxidation between TCM and transmission. Suspect the TCM, check and install a new TCM as required, refer to the new module/component installation note at the top of the DTC Index. Suspect the transmission, check and install a new transmission as required, refer to the new module/component installation note at the top of the DTC Index. Refer to service routines at the top of the DTC Index and carry out service routines as required using the manufacturer approved diagnostic system
P096700	Pressure Control Solenoid B Control Circuit High	• Short to power of internal wiring for SLU lock up control solenoid signal circuit • SLU lock up control solenoid no operation • Internal failure in TCM	Suspect the TCM, check and install a new TCM as required, refer to the new module/component installation note at the top of the DTC Index. Suspect the transmission, check and install a new transmission as required, refer to the new module/component installation note at the top of the DTC Index. Refer to service routines at the top of the DTC Index and carry out service routines as required using the manufacturer approved diagnostic system

DTC	Description	Possible Cause	Action
P096900	Pressure Control Solenoid C Control Circuit Range/Performance	• High contact resistance in the connector terminals between TCM and transmission • open circuit of internal wiring for SLC2 control signal circuit • open circuit of internal wiring for SLC2 ground control signal circuit • SLC2 pressure control solenoid no operation • SLC2 pressure control solenoid stuck • Internal failure in TCM	Check the terminals for corrosion, oxidation between TCM and transmission. Suspect the TCM, check and install a new TCM as required, refer to the new module/component installation note at the top of the DTC Index. Suspect the transmission, check and install a new transmission as required, refer to the new module/component installation note at the top of the DTC Index. Refer to service routines at the top of the DTC Index and carry out service routines as required using the manufacturer approved diagnostic system
P097000	Pressure Control Solenoid C Control Circuit Low	• Short to ground of internal wiring for SLC2 control signal circuit • Open circuit of internal wiring for SLC2 control signal circuit • SLC2 pressure control solenoid no operation • Internal failure in TCM	Suspect the TCM, check and install a new TCM as required, refer to the new module/component installation note at the top of the DTC Index. Suspect the transmission, check and install a new transmission as required, refer to the new module/component installation note at the top of the DTC Index. Refer to service routines at the top of the DTC Index and carry out service routines as required using the manufacturer approved diagnostic system
P097100	Pressure Control Solenoid C Control Circuit High	• Short to power of internal wiring for SLC2 control signal circuit • SLC2 pressure control solenoid no operation • Internal failure in TCM	Suspect the TCM, check and install a new TCM as required, refer to the new module/component installation note at the top of the DTC Index. Suspect the transmission, check and install a new transmission as required, refer to the new module/component installation note at the top of the DTC Index. Refer to service routines at the top of the DTC Index and carry out service routines as required using the manufacturer approved diagnostic system
P097300	Shift Solenoid A Control Circuit Low	• Short to ground of internal wiring for S1 shift solenoid 1 • S1 shift solenoid 1 not working • Internal failure in TCM	Suspect the TCM, check and install a new TCM as required, refer to the new module/component installation note at the top of the DTC Index. Suspect the transmission, check and install a new transmission as required, refer to the new module/component installation note at the top of the DTC Index. Refer to service routines at the top of the DTC Index and carry out service routines as required using the manufacturer approved diagnostic system
P097400	Shift Solenoid A Control Circuit High	• High contact resistance in the connector terminals between TCM and transmission • Open circuit of internal wiring for S1 shift solenoid 1 • S1 shift solenoid 1 not working • Short to power of internal wiring for S1 shift solenoid 1 • Internal failure in TCM	Suspect the TCM, check and install a new TCM as required, refer to the new module/component installation note at the top of the DTC Index. Suspect the transmission, check and install a new transmission as required, refer to the new module/component installation note at the top of the DTC Index. Refer to service routines at the top of the DTC Index and carry out service routines as required using the manufacturer approved diagnostic system
P097600	Shift Solenoid B Control Circuit Low	• Short to ground of internal wiring for S2 shift solenoid 2 • S2 shift solenoid 2 not working • Internal failure in TCM	Suspect the TCM, check and install a new TCM as required, refer to the new module/component installation note at the top of the DTC Index. Suspect the transmission, check and install a new transmission as required, refer to the new module/component installation note at the top of the DTC Index. Refer to service routines at the top of the DTC Index and carry out service routines as required using the manufacturer approved diagnostic system
P097700	Shift Solenoid B Control Circuit High	• High contact resistance in the connector terminals between TCM and transmission • Open circuit of internal wiring for S2 shift solenoid 2 • S2 shift solenoid 2 not working • Short to power of internal wiring for S2 shift solenoid 2 • Internal failure in TCM	Suspect the TCM, check and install a new TCM as required, refer to the new module/component installation note at the top of the DTC Index. Suspect the transmission, check and install a new transmission as required, refer to the new module/component installation note at the top of the DTC Index. Refer to service routines at the top of the DTC Index and carry out service routines as required using the manufacturer approved diagnostic system
P171900	Engine Torque Signal	• CAN message, engine torque signal has not been updated • CAN message, engine torque signal quality factor equals zero	Check for ECM DTCs. Rectify as required
P173D00	Ignition Key Lock Solenoid Circuit / Open	• Open circuit between ignition switch keylock solenoid and GSM	Carry out any diagnostic pinpoint tests associated with this DTC using the manufacturer approved diagnostic system. Refer to the electrical guides and check for open circuit between ignition switch keylock solenoid and GSM
P173E00	Ignition Key Lock Solenoid Circuit Low	• Short to ground between ignition switch keylock solenoid and GSM	Carry out any diagnostic pinpoint tests associated with this DTC using the manufacturer approved diagnostic system. Refer to the electrical guides and check for short to ground between ignition switch keylock solenoid and GSM
P173F00	Ignition Key Lock Solenoid Circuit High	• Short to power between ignition switch keylock solenoid and GSM	Carry out any diagnostic pinpoint tests associated with this DTC using the manufacturer approved diagnostic system. Refer to the electrical guides and check for short to power between ignition switch keylock solenoid and GSM
P178368	Transmission Overtemperature Condition	• Event information. System event not caused by the TCM, but requiring the TCM to record this DTC • Transmission fluid level low • Transmission fluid cooler/hoses are	Check the transmission fluid level and condition, correct as required. Check the transmission fluid cooler hoses for signs of obstruction/damage/blockage, correct as required. Check the engine cooling system and engine cooling fans operation. Suspect the transmission, check and install a new transmission as required, refer to the new module/component installation note at the top of the DTC Index. Refer to service routines at the top of the DTC Index and carry

DTC	Description	Possible Cause	Action
		obstructed/damaged/blocked • Mechanical failure of transmission • Transmission has been exposed to excessive high load and high ambient temperature greater than 150 degrees C (302 degrees F)	out service routines as required using the manufacturer approved diagnostic system
P179900	CAN TCM/ABS Circuit Malfunction	• Vehicle speed message has not been updated on CAN • ABS malfunction	Carry out any diagnostic pinpoint tests associated with this DTC using the manufacturer approved diagnostic system. Check ABS for DTCs rectify as required
P215800	Vehicle Speed Sensor B	• Open circuit of internal wiring NIN+ input speed sensor circuit • Short circuit to ground of internal wiring NIN+ input speed sensor circuit • Input speed sensor failure • Internal failure in TCM	Check the terminals for corrosion, oxidation between TCM and transmission. Check NIN+ circuit for open circuit, short to ground. Replace Input speed sensor. Suspect the TCM, check and install a new TCM as required, refer to the new module/component installation note at the top of the DTC Index. Refer to service routines at the top of the DTC Index and carry out service routines as required using the manufacturer approved diagnostic system
P271900	Pressure Control Solenoid D Control Circuit Range/Performance	• High contact resistance in the connector terminals between TCM and transmission • SLC3 pressure control solenoid stuck • open circuit of internal wiring for SLC3 control signal circuit • open circuit of internal wiring for SLC3 ground control signal circuit • SLC3 pressure control solenoid no operation • Internal failure in TCM	Check the terminals for corrosion, oxidation between TCM and transmission. Suspect the TCM, check and install a new TCM as required, refer to the new module/component installation note at the top of the DTC Index. Suspect the transmission, check and install a new transmission as required, refer to the new module/component installation note at the top of the DTC Index. Refer to service routines at the top of the DTC Index and carry out service routines as required using the manufacturer approved diagnostic system
P272000	Pressure Control Solenoid D Control Circuit Low	• High contact resistance in the connector terminals between TCM and transmission • Short to ground of internal wiring for SLC3 control signal circuit • Open circuit of internal wiring for SLC3 control signal circuit • SLC3 pressure control solenoid no operation • Internal failure in TCM	Check the terminals for corrosion, oxidation between TCM and transmission. Suspect the TCM, check and install a new TCM as required, refer to the new module/component installation note at the top of the DTC Index. Suspect the transmission, check and install a new transmission as required, refer to the new module/component installation note at the top of the DTC Index. Refer to service routines at the top of the DTC Index and carry out service routines as required using the manufacturer approved diagnostic system
P272100	Pressure Control Solenoid D Control Circuit High	• Short to power of internal wiring for SLC3 control signal circuit • SLC3 pressure control solenoid no operation • Internal failure in TCM	Suspect the TCM, check and install a new TCM as required, refer to the new module/component installation note at the top of the DTC Index. Suspect the transmission, check and install a new transmission as required, refer to the new module/component installation note at the top of the DTC Index. Refer to service routines at the top of the DTC Index and carry out service routines as required using the manufacturer approved diagnostic system
P272800	Pressure Control Solenoid E Control Circuit Range/Performance	• High contact resistance in the connector terminals between TCM and transmission • Open circuit of internal wiring for SLB1 control signal circuit • Open circuit of internal wiring for SLB1 ground control signal circuit • SLB1 pressure control solenoid no operation • SLB1 pressure control solenoid stuck • Internal failure in TCM	Check the terminals for corrosion, oxidation between TCM and transmission. Suspect the TCM, check and install a new TCM as required, refer to the new module/component installation note at the top of the DTC Index. Suspect the transmission, check and install a new transmission as required, refer to the new module/component installation note at the top of the DTC Index. Refer to service routines at the top of the DTC Index and carry out service routines as required using the manufacturer approved diagnostic system
P272900	Pressure Control Solenoid E Control Circuit Low	• High contact resistance in the connector terminals between TCM and transmission • Open circuit of internal wiring for SLB1 control signal circuit • Open circuit of internal wiring for SLB1 ground control signal circuit • SLB1 pressure control solenoid no operation • Internal failure in TCM	Check the terminals for corrosion, oxidation between TCM and transmission. Suspect the TCM, check and install a new TCM as required, refer to the new module/component installation note at the top of the DTC Index. Suspect the transmission, check and install a new transmission as required, refer to the new module/component installation note at the top of the DTC Index. Refer to service routines at the top of the DTC Index and carry out service routines as required using the manufacturer approved diagnostic system
P273000	Pressure Control Solenoid E Control Circuit High	• Short to power of internal wiring for SLB1 control signal circuit • SLB1 pressure control solenoid no operation • Internal failure in TCM	Suspect the TCM, check and install a new TCM as required, refer to the new module/component installation note at the top of the DTC Index. Suspect the transmission, check and install a new transmission as required, refer to the new module/component installation note at the top of the DTC Index. Refer to service routines at the top of the DTC Index and carry out service routines as required using the manufacturer approved diagnostic system

DTC	Description	Possible Cause	Action
P273300	Pressure Control Solenoid F Stuck On	• SLC1 pressure control not engaged in drive • Mechanical fault in the transmission	Suspect the transmission, check and install a new transmission as required, refer to the new module/component installation note at the top of the DTC Index. Refer to service routines at the top of the DTC Index and carry out service routines as required using the manufacturer approved diagnostic system
P273700	Pressure Control Solenoid F Control Circuit Range/Performance	• High contact resistance in the connector terminals between TCM and transmission • Open circuit of internal wiring for SLC1 control signal circuit • Open circuit of internal wiring for SLC1 ground control signal circuit • SLC1 pressure control solenoid no operation • SLC1 pressure control solenoid stuck • Internal failure in TCM	Check the terminals for corrosion, oxidation between TCM and transmission. Suspect the TCM, check and install a new TCM as required, refer to the new module/component installation note at the top of the DTC Index. Suspect the transmission, check and install a new transmission as required, refer to the new module/component installation note at the top of the DTC Index. Refer to service routines at the top of the DTC Index and carry out service routines as required using the manufacturer approved diagnostic system
P273800	Pressure Control Solenoid F Control Circuit Low	• High contact resistance in the connector terminals between TCM and transmission • Open circuit of internal wiring for SLC1 control signal circuit • Open circuit of internal wiring for SLC1 ground control signal circuit • SLC1 pressure control solenoid no operation • Internal failure in TCM	Check the terminals for corrosion, oxidation between TCM and transmission. Suspect the TCM, check and install a new TCM as required, refer to the new module/component installation note at the top of the DTC Index. Suspect the transmission, check and install a new transmission as required, refer to the new module/component installation note at the top of the DTC Index. Refer to service routines at the top of the DTC Index and carry out service routines as required using the manufacturer approved diagnostic system
P273900	Pressure Control Solenoid F Control Circuit High	• Short to power of internal wiring for SLC1 control signal circuit • SLC1 pressure control solenoid no operation • Internal failure in TCM	Suspect the TCM, check and install a new TCM as required, refer to the new module/component installation note at the top of the DTC Index. Suspect the transmission, check and install a new transmission as required, refer to the new module/component installation note at the top of the DTC Index. Refer to service routines at the top of the DTC Index and carry out service routines as required using the manufacturer approved diagnostic system
P278368	Torque Converter Temperature Too High	• Event information. System event not caused by the TCM, but requiring the TCM to record this DTC • Torque converter temperature greater than 170 degrees C (338 degrees F)	Check the transmission fluid level and condition. Check the transmission fluid cooler/hoses for signs of obstruction, damage, blockage. Suspect the transmission, check and install a new transmission as required, refer to the new module/component installation note at the top of the DTC Index. Refer to service routines at the top of the DTC Index and carry out service routines as required using the manufacturer approved diagnostic system
P278768	Clutch Temperature Too High	• Event information. System event not caused by the TCM, but requiring the TCM to record this DTC • Torque converter stalled • The transmission fluid temperature is the same, or greater than 120 degrees C (248 degrees F) for longer than 5 seconds • The transmission fluid temperature is greater than 120 degrees C and lower than 150 degrees C (302 degrees F) for longer than 4 seconds • The transmission fluid temperature is greater than 150 degrees (302 degrees F) for longer than 3 seconds • Internal failure in TCM	Check the transmission fluid level and condition. Check the transmission fluid cooler/hoses for signs of obstruction, damage, blockage. Suspect the transmission, check and install a new transmission as required, refer to the new module/component installation note at the top of the DTC Index. Refer to service routines at the top of the DTC Index and carry out service routines as required using the manufacturer approved diagnostic system
P280000	Transmission Range Sensor B Circuit (PRNDL Input)	• Incorrect adjustment of gear position sensor • Internal failure in TCM	Check the gear selector lever is adjusted correctly. Suspect the TCM, check and install a new TCM as required, refer to the new module/component installation note at the top of the DTC Index. Refer to service routines at the top of the DTC Index and carry out service routines as required using the manufacturer approved diagnostic system
P280100	Transmission Range Sensor B Circuit Range/Performance	• Undefined range when drive selected • Incorrect adjustment of gear position sensor • Internal failure in TCM	Check the gear selector lever is adjusted correctly. Suspect the TCM, GSM or transmission check and install a new TCM, GSM or transmission as required, refer to the new module/component installation note at the top of the DTC Index. Refer to service routines at the top of the DTC Index and carry out service routines as required using the manufacturer approved diagnostic system
P280500	Transmission Range Sensor A / B Correlation	• Incorrect adjustment of gear position sensor • Internal failure in TCM	Check the gear selector lever is adjusted correctly. Suspect the TCM, check and install a new TCM as required, refer to the new module/component installation note at the top of the DTC Index. Refer to service routines at the top of the DTC Index and carry out service routines as required using the manufacturer approved diagnostic system
U000100	High Speed CAN Communication Bus	• CAN bus open circuit • CAN bus short circuit to ground • CAN bus short circuit to power • Internal fault in another control module in the same	Carry out any diagnostic pinpoint tests associated with this DTC using the manufacturer approved diagnostic system. Refer to the electrical guides and check CAN circuit for open circuit, short to ground, short to power. Suspect the TCM, check and install a new TCM as required, refer to the new module/component installation note at the top of the DTC Index. Refer to service routines at the top of the DTC Index and

DTC	Description	Possible Cause	Action
		• part of the CAN network • Internal failure in TCM	carry out service routines as required using the manufacturer approved diagnostic system
U210511	Switch Pack Signal "A"	• Circuit short to ground. The TCM has detected a ground measurement for a period longer than expected or has detected a ground measurement when another value was expected • Shiftlock solenoid circuit short to ground • GSM internal failure	Refer to the electrical guides and check shiftlock circuit for short to ground. Suspect the GSM, check and install a new GSM as required, refer to the new module/component installation note at the top of the DTC Index
U210512	Switch Pack Signal "A"	• Circuit short to power. The TCM has detected a vehicle power measurement for a period longer than expected or has detected a vehicle power measurement when another value was expected • Shiftlock solenoid circuit short to power • Open circuit shiftlock solenoid circuit • GSM internal failure	Refer to the electrical guides and check shiftlock circuit for short to power, open circuit. Suspect the GSM, check and install a new GSM as required, refer to the new module/component installation note at the top of the DTC Index

www.JagDocs.com

Automatic Transmission / Transaxle - Vehicles With: 6-Speed Automatic Transaxle - AWF21 - Transmission Fluid Drain and Refill

General Procedures

WARNING: Observe due care when draining, as the fluid can be very hot.

1. Ensure that the automatic transmission is in 'P' and the handbrake is fully applied.
2. Remove the battery tray.
   For additional information, refer to: Battery Tray (414-01 Battery, Mounting and Cables, Removal and Installation).
3. Release the battery carrier bracket and position aside.

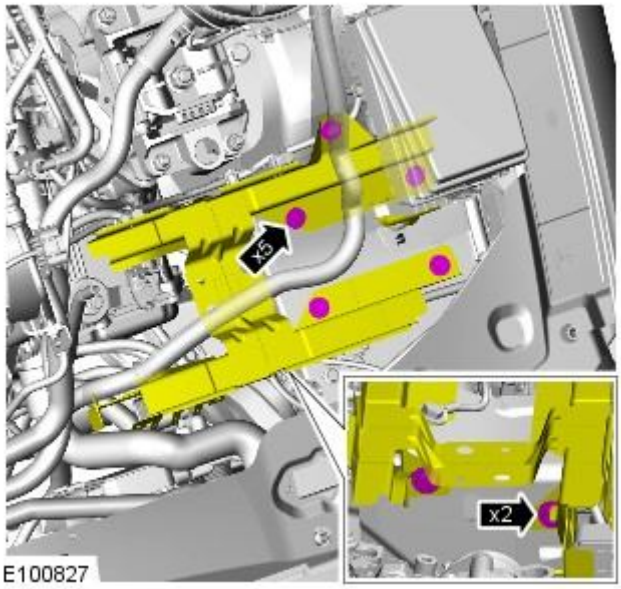

4. Clean the area around the transmission fluid filler plug.
5. Remove the transmission fluid filler plug.

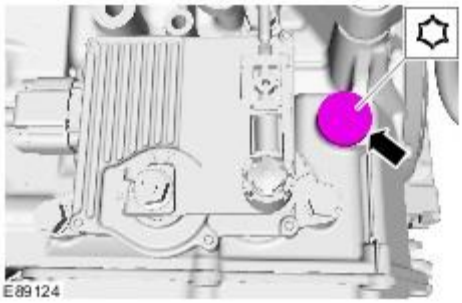

6. WARNING: Do not work on or under a vehicle supported only by a jack. Always support the vehicle on safety stands.

• NOTE: Make sure that the vehicle is standing on a level surface.

Raise and support the vehicle.

7. Remove the air deflector.
   For additional information, refer to: Air Deflector - 2.0L Duratorq-TDCi/2.2L Duratorq-TDCi (110kW/150PS) - Puma (501-02 Front End Body Panels, Removal and Installation).
8. Clean the area around the transmission fluid level and drain plugs.
9. Place a container under the transmission.

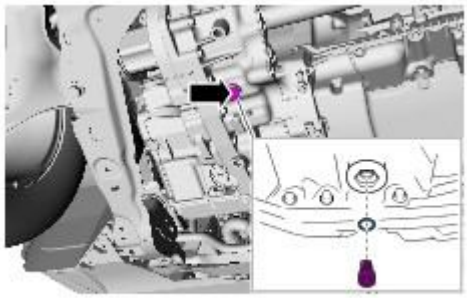

10. CAUTION: The fluid level plug and drain plug both use the same point on the transmission. The inner plug is for level indication and the outer plug is to drain the fluid.

Remove the transmission fluid level plug.

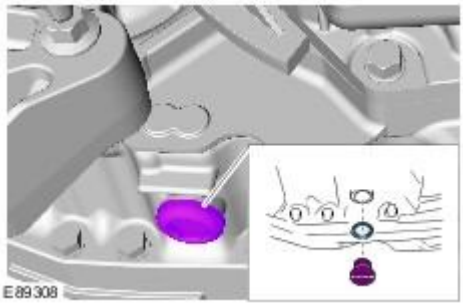

11. Remove the transmission fluid drain plug.

- Allow the transmission fluid to drain.

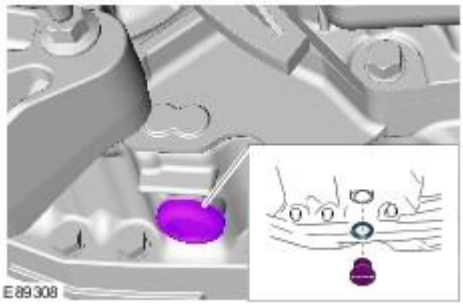

12. NOTE: Install a new gasket.

Install the transmission fluid drain plug.

- Tighten to 47 Nm.

13. Lower the vehicle.

14. Fill the transmission with the correct fluid until it runs from the level plug.

15. Install the transmission fluid level plug.

- Tighten to 7 Nm.

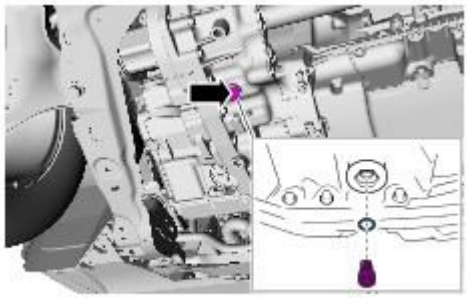

16. Add an additional 0.5 litres of transmission fluid.

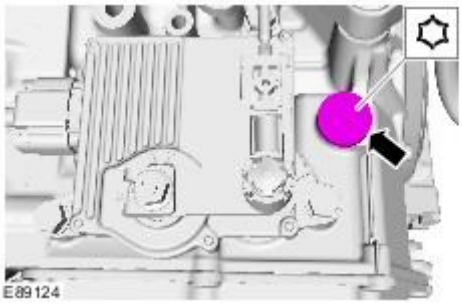

17. CAUTION: A new O-ring seal is to be installed.

Install the transmission fluid filler plug.

- Tighten to 40 Nm.

18. Secure the battery carrier bracket.

- Tighten to 25 Nm.

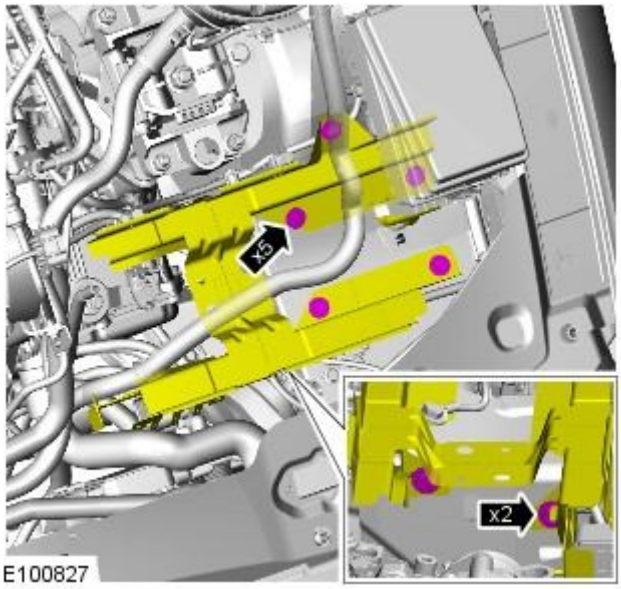

19. Install the battery tray.
For additional information, refer to: Battery Tray (414-01 Battery, Mounting and Cables, Removal and Installation).

20. Connect the Jaguar approved diagnostic equipment. Start and run the engine.

21. Using the diagnostic equipment to monitor the transmission fluid temperature, allow the temperature to reach 60 degrees C.

22. Move the selector lever from 'P' through all the gear positions, pausing in each gear position for 2-3 seconds and return to the 'P' position.

23. Raise the vehicle.

24. Remove the transmission fluid level plug.

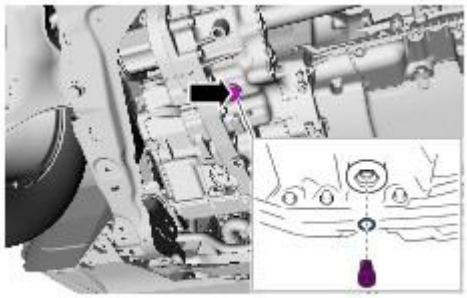

25. With the engine running a small amount of fluid should drip out of the level plug.

26. CAUTION: A new O-ring seal is to be installed.

Install the transmission fluid level plug.

- Tighten to 7 Nm.

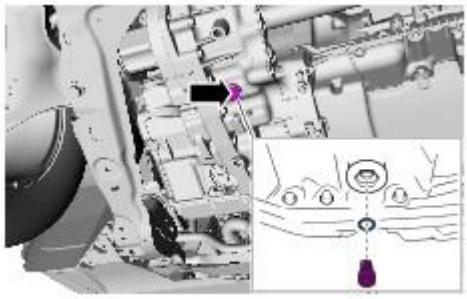

27. Install the air deflector.
For additional information, refer to: Air Deflector - 2.0L Duratorq-TDCi/2.2L Duratorq-TDCi (110kW/150PS) - Puma (501-02 Front End Body Panels, Removal and Installation).

Automatic Transmission / Transaxle - Vehicles With: 6-Speed Automatic Transaxle - AWF21 - Transmission Fluid Level Check

General Procedures

WARNING: Observe due care when draining, as the fluid can be very hot.

1. Ensure that the automatic transmission is in 'P' and the handbrake is fully applied.
2. Remove the battery tray.
   For additional information, refer to: Battery Tray (414-01 Battery, Mounting and Cables, Removal and Installation).
3. Release the battery carrier bracket and position aside.

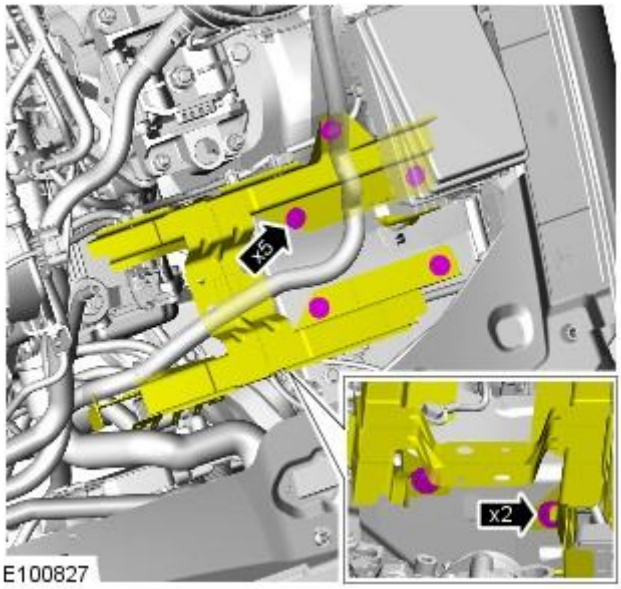

4. Clean the area around the transmission fluid filler plug.

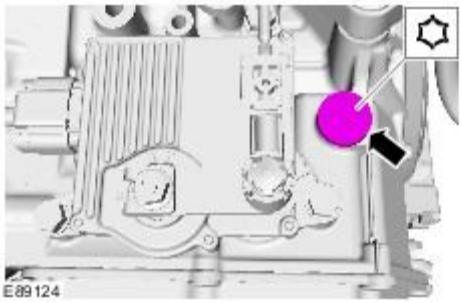

5. CAUTION: The fluid level plug and drain plug both use the same point on the transmission. The inner plug is for level indication and the outer plug is to drain the fluid.

   Remove the transmission fluid filler plug.

6. WARNING: Do not work on or under a vehicle supported only by a jack. Always support the vehicle on safety stands.

• NOTE: Make sure that the vehicle is standing on a level surface.

   Raise and support the vehicle.

7. Remove the air deflector.
   For additional information, refer to: Air Deflector - 2.0L Duratorq-TDCi/2.2L Duratorq-TDCi (110kW/150PS) - Puma (501-02 Front End Body Panels, Removal and Installation).
8. Clean the area around the transmission fluid level plug.
9. Place a container under the transmission.
10. Lower the vehicle.
11. Add 0.5 litres of transmission fluid.

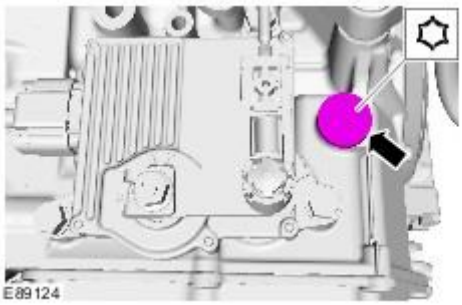

12. CAUTION: A new O-ring seal is to be installed.

    Install the transmission fluid filler plug.

    - Tighten to 40 Nm.

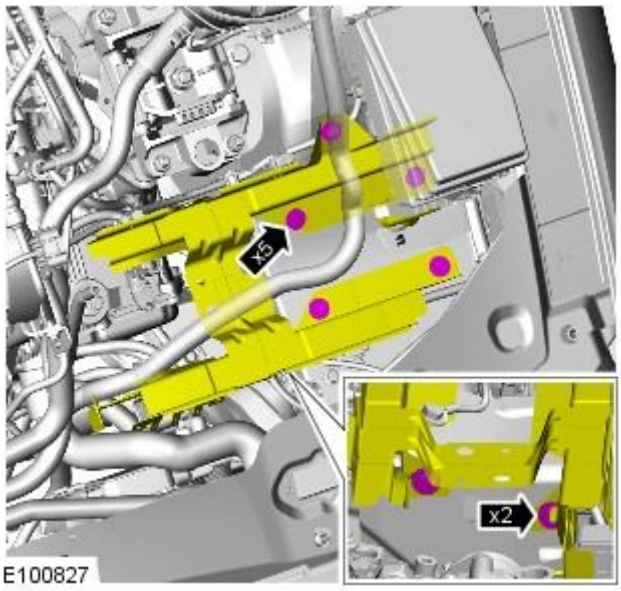

13. Secure the battery carrier bracket.

- Tighten to 25 Nm.

14. Install the battery tray.
For additional information, refer to: Battery Tray (414-01 Battery, Mounting and Cables, Removal and Installation).

15. Connect the Jaguar approved diagnostic equipment. Start and run the engine.

16. Using the diagnostic equipment to monitor the transmission fluid temperature, allow the temperature to reach 60 degrees C.

17. Move the selector lever from 'P' through all the gear positions, pausing in each gear position for 2-3 seconds and return to the 'P' position.

18. Raise the vehicle.

19. Remove the transmission fluid level plug.

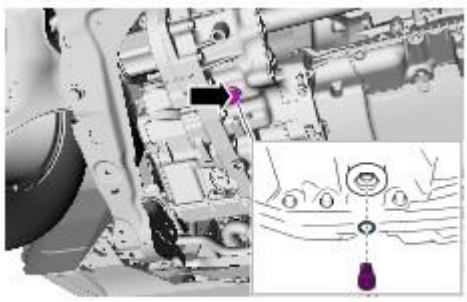

20. With the engine running a small amount of fluid should drip out of the level plug.

21. CAUTION: A new O-ring seal is to be installed.

Install the transmission fluid level plug.

- Tighten to 7 Nm.

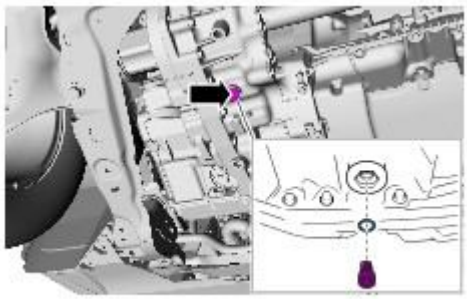

22. Install the air deflector.
For additional information, refer to: Air Deflector - 2.0L Duratorq-TDCi/2.2L Duratorq-TDCi (110kW/150PS) - Puma (501-02 Front End Body Panels, Removal and Installation).

Automatic Transmission / Transaxle - Vehicles With: 6-Speed Automatic Transaxle - AWF21 - Main Control Valve Body

In-vehicle Repair

Removal

1. Raise and support the vehicle.
2. Remove the transmission fluid pan.
   For additional information, refer to: Transmission Fluid Pan (307-01B Automatic Transmission/Transaxle - Vehicles With: 6-Speed Automatic Transaxle - AWF21, In-vehicle Repair).
3. Disconnect the electrical connector.

E82899

4. NOTE: Note the position of the electrical connectors.

   Release the transmission internal wiring harness.

   - Remove the bolt.
   - Release from the clip.
   - Disconnect the 9 electrical connectors.

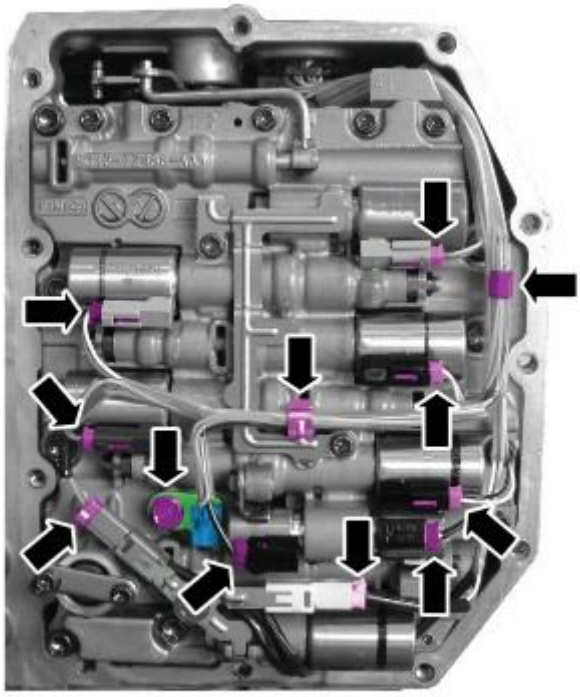

E101212

5. NOTE: Make sure that the tape has not detached from the edges of the component.

   Position the wiring harness aside.

E83097

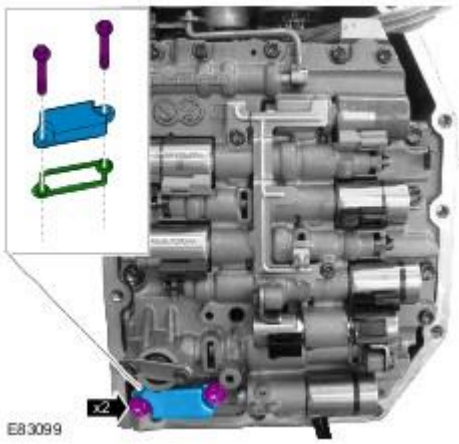

6. CAUTION: Discard the bolts.

Remove the suction cover.

- Remove the 2 bolts.
- Remove and discard the gasket.

7. CAUTION: Discard the bolts.

• NOTE: With every pass, undo the bolts one turn at a time alternately.

Release the transmission main control valve body.

- Remove the 6 bolts.

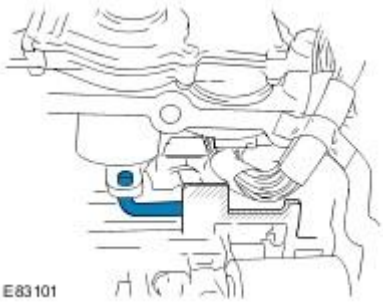

8. CAUTION: Make sure that no components fall off during removal.

Remove the transmission main control valve body.

- Release the selector selector rod.

Installation

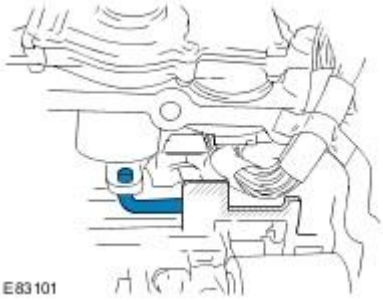

1. Install the transmission main control valve body.

- Attach the selector rod.

2. CAUTIONS:

Make sure that new bolts are installed.

Only tighten the bolts finger-tight at this stage.

Secure the transmission main control valve body.

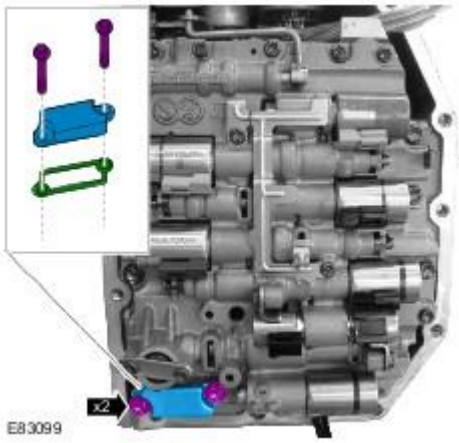

3. CAUTIONS:

Make sure that new bolts are installed.

Only tighten the bolts finger-tight at this stage.

• NOTE: Install a new gasket.

Install the suction cover.

- Install the bolts.

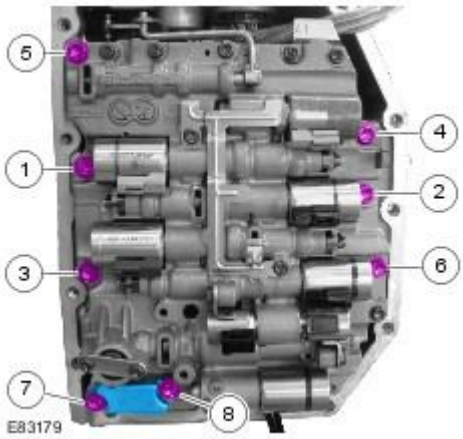

4. NOTE: Install a new gasket.

Tighten the bolts to 10 Nm.

5. CAUTION: Make sure that these components are installed to the noted removal position.

Secure the transmission internal wiring harness.

- Secure in the clips.
- Connect the electrical connectors.
- Tighten the bolt to 10 Nm.

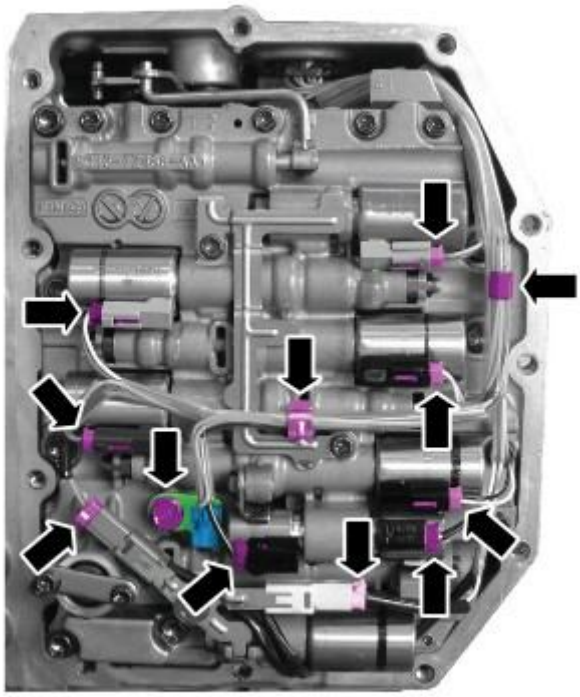

E101212

6. Connect the electrical connector.

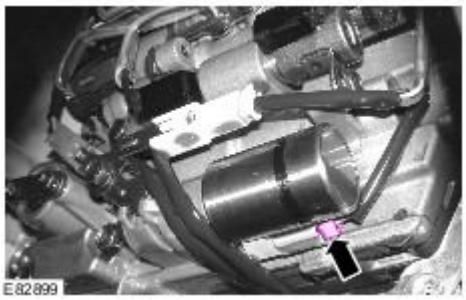

E82899

7. Install the transmission fluid pan.
For additional information, refer to: Transmission Fluid Pan (307-01B Automatic Transmission/Transaxle - Vehicles With: 6-Speed Automatic Transaxle - AWF21, In-vehicle Repair).

Automatic Transmission / Transaxle - Vehicles With: 6-Speed Automatic Transaxle - AWF21 - Selector Shaft Seal

In-vehicle Repair

Removal

• NOTE: Removal steps in this procedure may contain installation details.

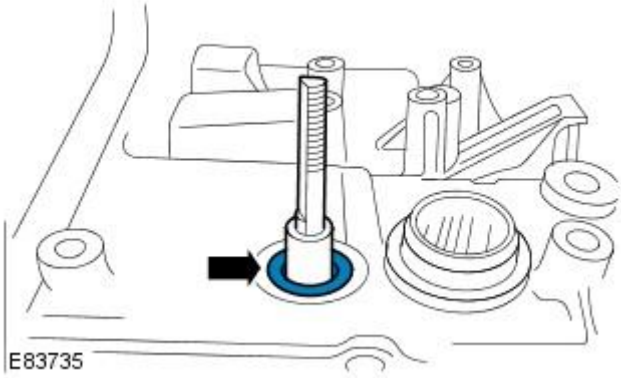

1. Disconnect the battery ground cable.
   For additional information, refer to: Battery Disconnect and Connect (414-01 Battery, Mounting and Cables, General Procedures).
2. Remove the transmission control module (TCM).
   For additional information, refer to: Transmission Control Module (TCM) (307-01B Automatic Transmission/Transaxle - Vehicles With: 6-Speed Automatic Transaxle - AWF21, In-vehicle Repair).
3. CAUTIONS:

   Take extra care not to damage the mating faces.

   Make sure that a new component is installed.

   Remove the transmission selector shaft seal.

Installation

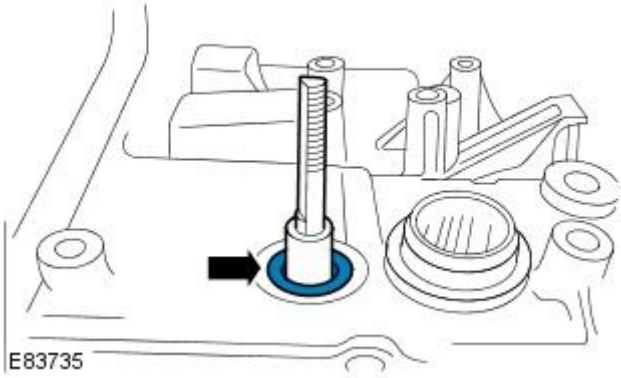

1. CAUTIONS:

   Make sure that the mating faces are clean and free of foreign material.

   Install the seal, flush with the transmission case.

   Install the transmission selector shaft seal.
2. Install the transmission control module (TCM).
   For additional information, refer to: Transmission Control Module (TCM) (307-01B Automatic Transmission/Transaxle - Vehicles With: 6-Speed Automatic Transaxle - AWF21, In-vehicle Repair).
3. Connect the battery ground cable.
   For additional information, refer to: Battery Disconnect and Connect (414-01 Battery, Mounting and Cables, General Procedures).

Automatic Transmission / Transaxle - Vehicles With: 6-Speed Automatic Transaxle - AWF21 - Transmission Control Module (TCM)

In-vehicle Repair

Removal

1. Remove the cover and disconnect the battery ground cable.
   For additional information, refer to: Battery Disconnect and Connect (414-01 Battery, Mounting and Cables, General Procedures).
2. Remove the battery tray.
   For additional information, refer to: Battery Tray (414-01 Battery, Mounting and Cables, Removal and Installation).
3. Release and disconnect the selector lever cable.

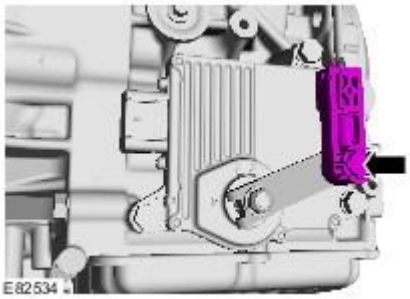

4. Remove the transmission selector lever and disconnect the electrical connector.
   - Remove the nut.

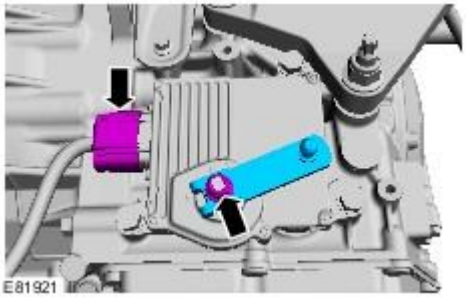

5. Remove the transmission control module (TCM).
   - Remove the 3 bolts.

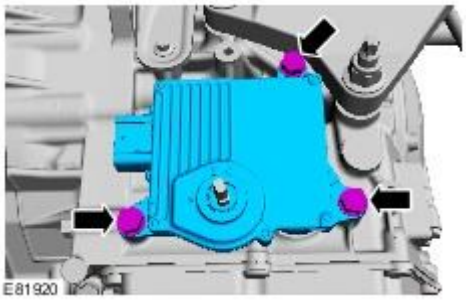

Installation

1. CAUTIONS:

Make sure that the terminals or pins/sockets of the transmission control module (TCM) and the TCM connector are not bent or damaged.

The component must be aligned with the installation markings.

• NOTE: The new transmission control module (TCM) is set in the N position at the factory.

Install the transmission control module (TCM).

- Tighten the bolts to 24 Nm.

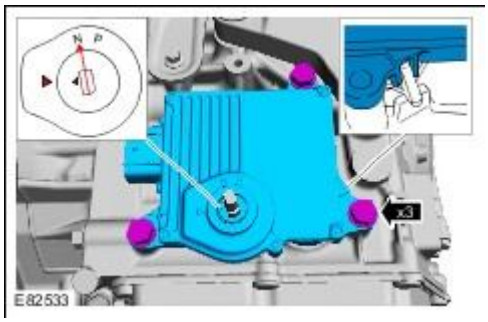

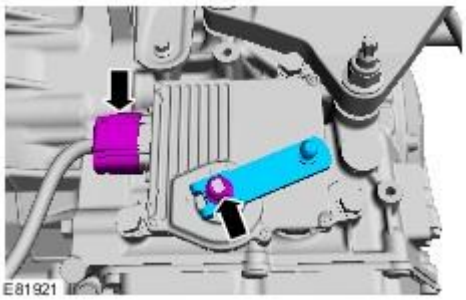

2. Install the transmission selector lever and connect the electrical connector.
   - Tighten the nut to 13 Nm.

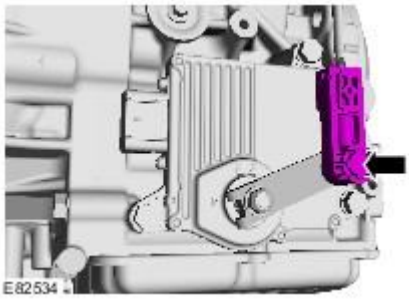

3. Secure and connect the selector lever cable.

4. Install the battery tray.
   For additional information, refer to: Battery Tray (414-01 Battery, Mounting and Cables, Removal and Installation).
5. Connect the battery ground cable and install the cover.
   For additional information, refer to: Battery Disconnect and Connect (414-01 Battery, Mounting and Cables, General Procedures).
6. If a new component has been installed, configure using Jaguar approved diagnostic equipment.

Automatic Transmission/Transaxle - Vehicles With: 6-Speed Automatic Transaxle - AWF21 - Transmission Internal Wiring Harness

In-vehicle Repair

Removal

1. Raise and support the vehicle.
2. Remove the transmission control module (TCM).
   For additional information, refer to: Transmission Control Module (TCM) (307-01B Automatic Transmission/Transaxle - Vehicles With: 6-Speed Automatic Transaxle - AWF21, In-vehicle Repair).
3. Remove the transmission fluid pan.
   For additional information, refer to: Transmission Fluid Pan (307-01B Automatic Transmission/Transaxle - Vehicles With: 6-Speed Automatic Transaxle - AWF21, In-vehicle Repair).
4. Disconnect the electrical connector.

E82899

5. NOTE: Note the position of the electrical connectors.

   Release the transmission internal wiring harness.

   - Remove the bolt.
   - Release from the clip.
   - Disconnect the 9 electrical connectors.

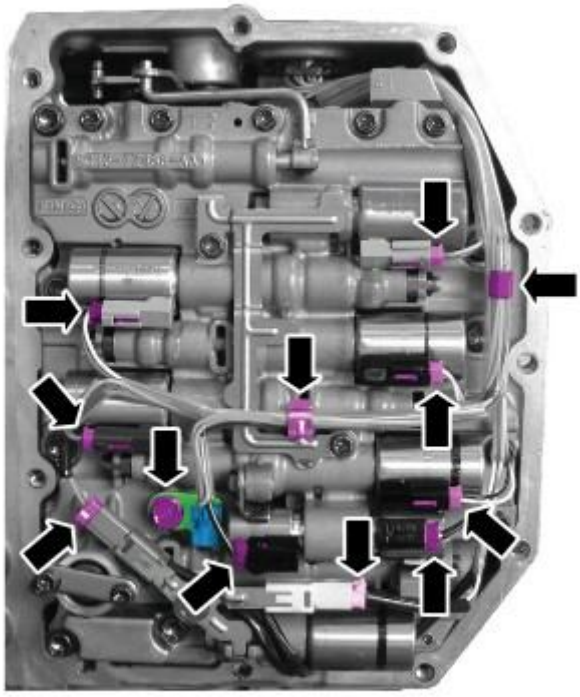

E101212

6. CAUTION: Make sure that the wiring harness does not catch.

   Remove the transmission internal wiring harness.

   - Remove the clip.

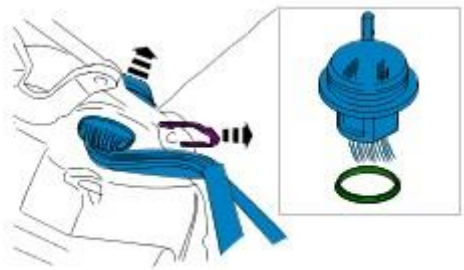

E82897

Installation

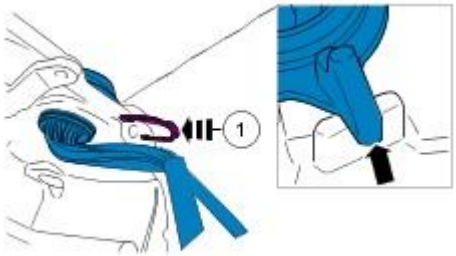

E82898

1. CAUTIONS:

Make sure that the wiring harness does not catch.

The component must be aligned with the installation markings.

Install the transmission internal wiring harness.

- Secure with the clip.

2. CAUTION: Make sure that these components are installed to the noted removal position.

Secure the transmission internal wiring harness.

- Connect the electrical connectors.
- Tighten the bolt to 10 Nm.
- Secure in the clip.

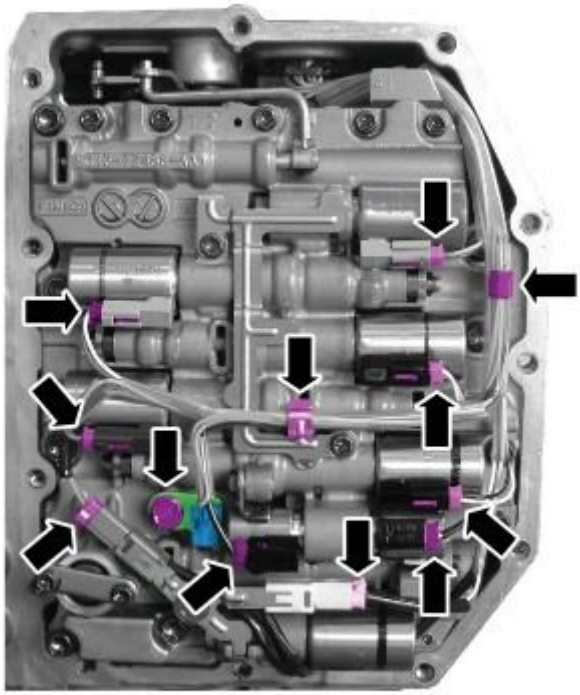

E101212

E82899

3. Connect the electrical connector.

4. Install the transmission fluid pan.
For additional information, refer to: Transmission Fluid Pan (307-01B Automatic Transmission/Transaxle - Vehicles With: 6-Speed Automatic Transaxle - AWF21, In-vehicle Repair).

5. Install the transmission control module (TCM).
For additional information, refer to: Transmission Control Module (TCM) (307-01B Automatic Transmission/Transaxle - Vehicles With: 6-Speed Automatic Transaxle - AWF21, In-vehicle Repair).

Automatic Transmission / Transaxle - Vehicles With: 6-Speed Automatic Transaxle - AWF21 - Transmission Fluid Pan

In-vehicle Repair

Removal

• NOTE: Removal steps in this procedure may contain installation details.

1. Raise and support the vehicle.
2. Drain the transmission fluid.
   For additional information, refer to: Transmission Fluid Drain and Refill (307-01B Automatic Transmission/Transaxle - Vehicles With: 6-Speed Automatic Transaxle - AWF21, General Procedures).
3. Remove the charge air cooler intake pipe.
   - Release the 2 hose clips.
   - Remove the 2 bolts.

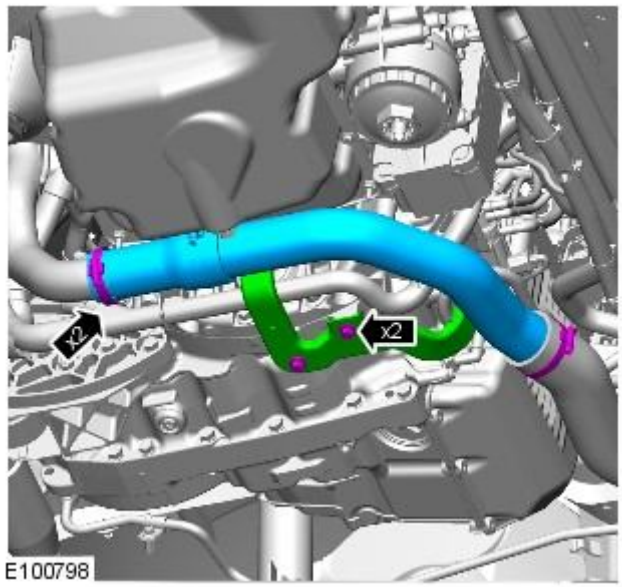

4. Position the charge air cooler intake hose aside.
5. Disconnect the 2 transmission fluid cooler tubes.
   - Remove the 2 Torx bolts.
   - Position aside.

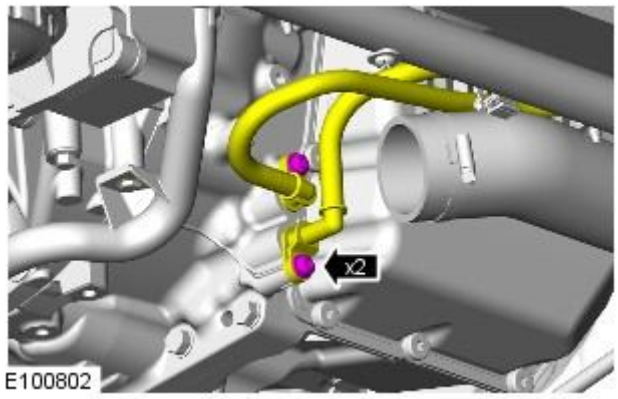

6. CAUTION: Take extra care not to damage the mating faces.

   Remove the transmission fluid pan.
   - Remove the 12 bolts.
   - Slacken the transmission fluid pan with a plastic hammer, avoid distorting the pan.

Installation

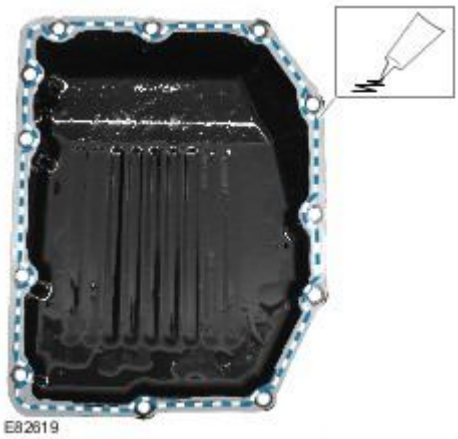

1. CAUTION: Make sure that the mating faces are clean and free of foreign material.

Apply silicone rubber sealant to the transmission fluid pan.

2. Install the transmission fluid pan.

- Apply Loctite 243 to the transmission fluid pan bolt threads.
- Tighten to 13 Nm.

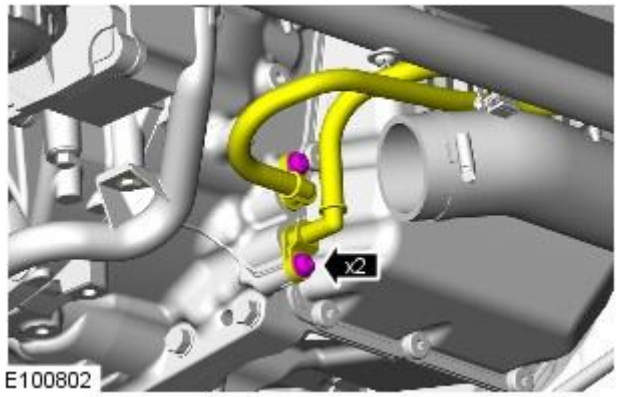

3. Connect the transmission fluid cooler tubes.

- Tighten to 25 Nm.

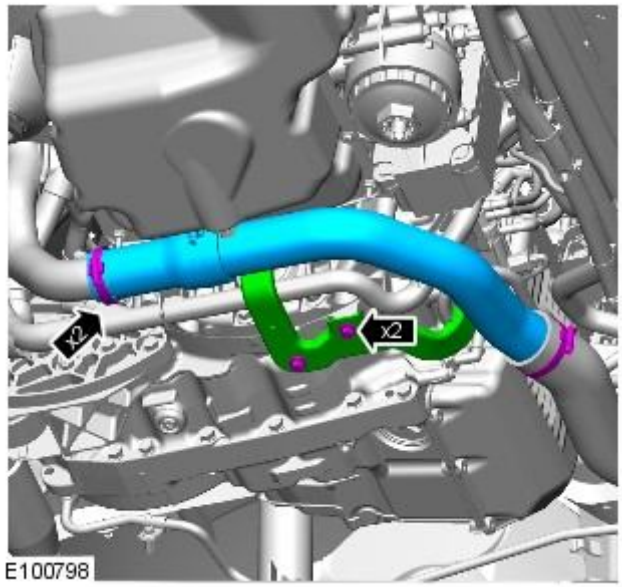

4. Install the charge air cooler intake pipe.

- Tighten the hose clips.
- Tighten the bolts to 35 Nm.

5. Refill the transmission with fluid.
For additional information, refer to: Transmission Fluid Drain and Refill (307-01B Automatic Transmission/Transaxle - Vehicles With: 6-Speed Automatic Transaxle - AWF21, General Procedures).

Automatic Transmission / Transaxle - Vehicles With: 6-Speed Automatic Transaxle - AWF21 - Torque Converter

Removal and Installation

Removal

1. Raise and support the vehicle.

2. Remove the transmission.
For additional information, refer to: Transmission (307-01B Automatic Transmission/Transaxle - Vehicles With: 6-Speed Automatic Transaxle - AWF21, Removal).

3. NOTE: Some variation in the illustrations may occur, but the essential information is always correct.

Using the special tools, remove the torque converter.

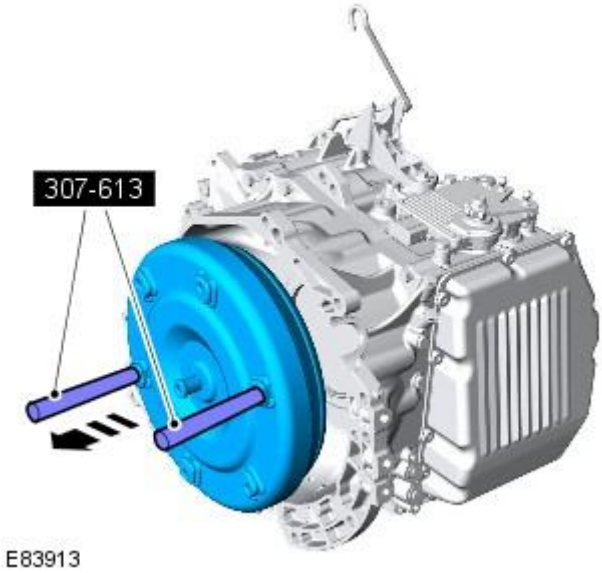

Installation

1. CAUTIONS:

Align the torque converter and oil pump drive before installing the torque converter.

Make sure that the mating faces are clean and free of foreign material.

Take extra care when handling the component.

Install the torque converter.

2. Install the transmission.
For additional information, refer to: Transmission (307-01B Automatic Transmission/Transaxle - Vehicles With: 6-Speed Automatic Transaxle - AWF21, Removal).

Automatic Transmission / Transaxle - Vehicles With: 6-Speed Automatic Transaxle - AWF21 - Torque Converter Seal

Removal and Installation

Removal

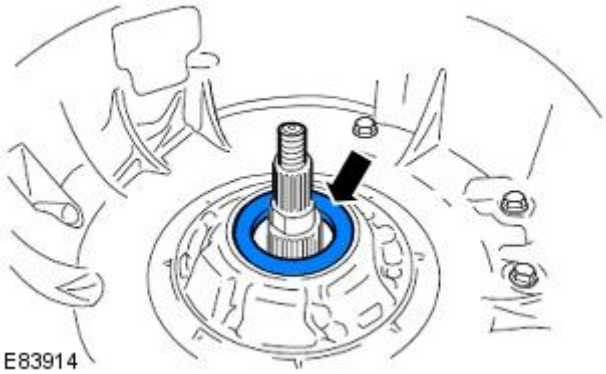

1. Raise and support the vehicle.
2. Remove the torque converter.
   For additional information, refer to: Torque Converter (307-01, Removal and Installation).
3. Carefully remove and discard the torque converter seal.

Installation

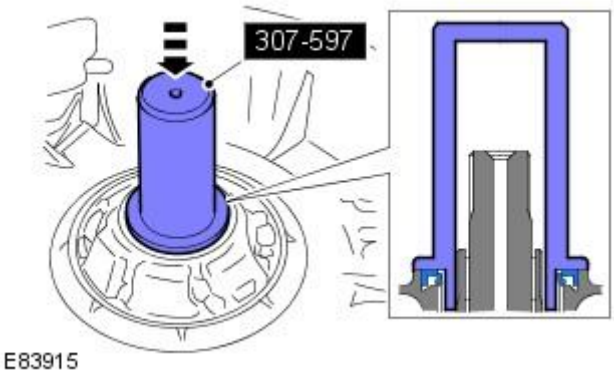

1. CAUTIONS:

   Extreme cleanliness must be exercised when handling this component.

   Make sure that the mating faces are clean and free of foreign material.

   Using the special tool, install a new torque converter seal.

2. CAUTIONS:

   Align the torque converter and oil pump drive before installing the torque converter.

   Make sure that the mating faces are clean and free of foreign material.

   Take extra care when handling the component.

   Install the torque converter.
   For additional information, refer to: Torque Converter (307-01, Removal and Installation).

Automatic Transmission/Transaxle - Vehicles With: 6-Speed Automatic Transaxle - AWF21 - Turbine Shaft Speed (TSS) Sensor

Removal and Installation

Removal

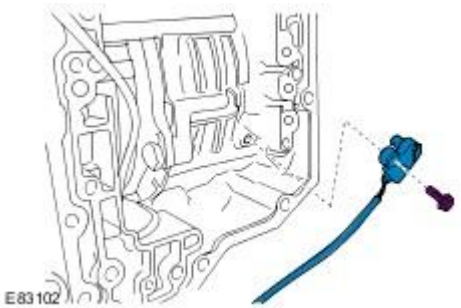

1. Remove the main control valve body.
   For additional information, refer to: Main Control Valve Body (307-01B Automatic Transmission/Transaxle - Vehicles With: 6-Speed Automatic Transaxle - AWF21, In-vehicle Repair).
2. Remove the turbine shaft speed (TSS) sensor.
   - Remove the bolt.
   - Release the sensor from the transmission.

Installation

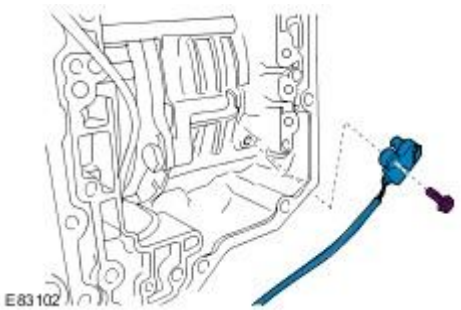

1. To install, reverse the removal procedure.
   - Tighten to 6 Nm.

Automatic Transmission / Transaxle - Vehicles With: 6-Speed Automatic Transaxle - AWF21 - Transmission

Removal

Special Tool(s)	
	Impulse extractor 100-012(LRT-99-004)
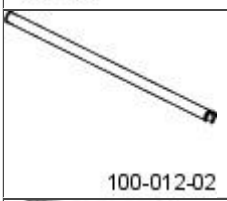	Slide Hammer Shaft - 100-012-02
	Halfshaft Remover Fork - 204-226
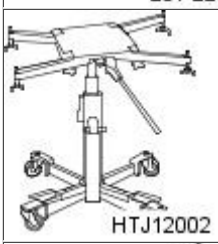	Power train assembly jack HTJ1200-2
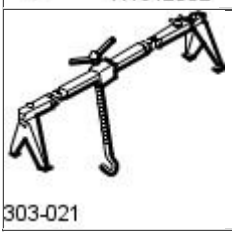	Engine support bracket 303-021

Removal

1. Disconnect the battery ground cable.
   For additional information, refer to: Battery Disconnect and Connect (414-01 Battery, Mounting and Cables, General Procedures).
2. Remove the battery tray.
   For additional information, refer to: Battery Tray (414-01 Battery, Mounting and Cables, Removal and Installation).
3. Raise the vehicle.
4. Remove the front subframe.
   For additional information, refer to: Front Subframe - 2.0L Duratorq-TDCi/2.2L Duratorq-TDCi (110kW/150PS) - Puma (502-00 Uni-Body, Subframe and Mounting System, Removal and Installation).
5. Drain the transmission fluid.
   For additional information, refer to: Transmission Fluid Drain and Refill (307-01B Automatic Transmission/Transaxle - Vehicles With: 6-Speed Automatic Transaxle - AWF21, General Procedures).

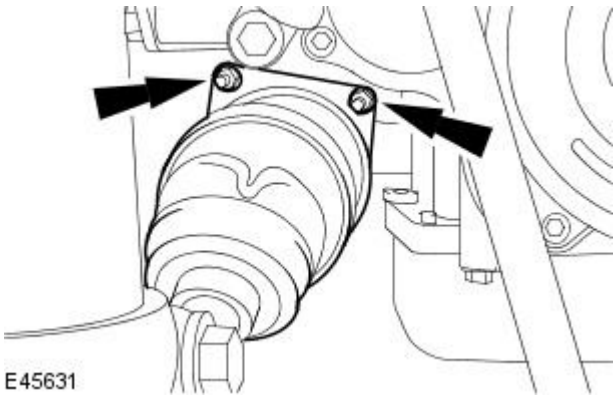

6. CAUTION: Make sure the halfshaft constant velocity (CV) joints do not over articulate. Failure to follow this instruction may result in damage to the CV joints.

   Release the RH halfshaft.

   - Release the RH halfshaft from the transmission.
   - Secure the RH halfshaft to one side.

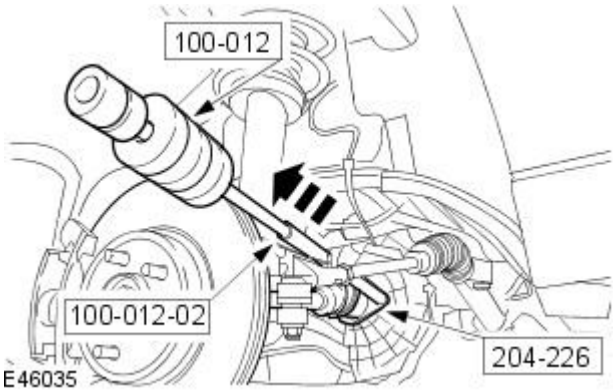

7. Using the special tools, release the LH halfshaft.

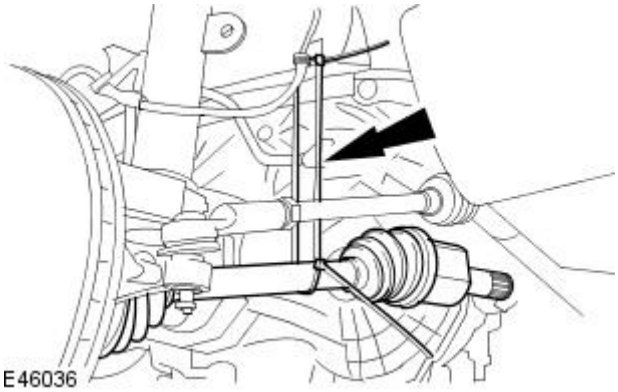

8. CAUTION: Make sure the halfshaft constant velocity (CV) joints do not over articulate. Failure to follow this instruction may result in damage to the CV joints.

Using a suitable tie strap, support the LH halfshaft.

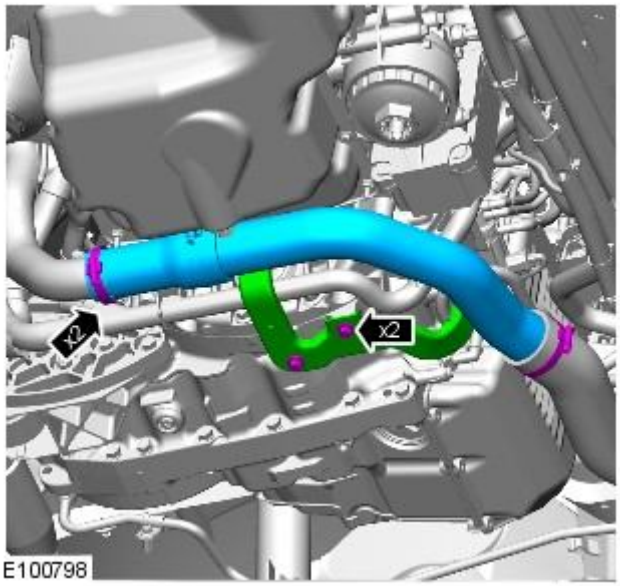

9. Remove the charge air cooler intake pipe.

- Release the 2 hose clips.
- Remove the 2 bolts.

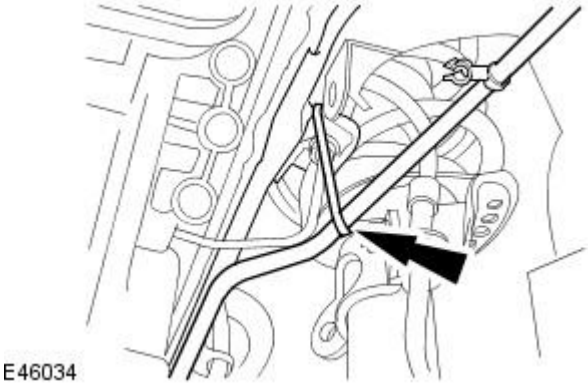

10. Support the power steering fluid pipe.

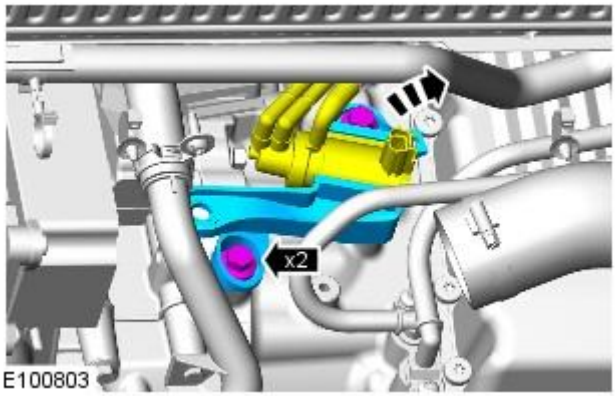

E100803

11. Release the emission control valve.

- Remove the 2 bolts.
- Position aside.

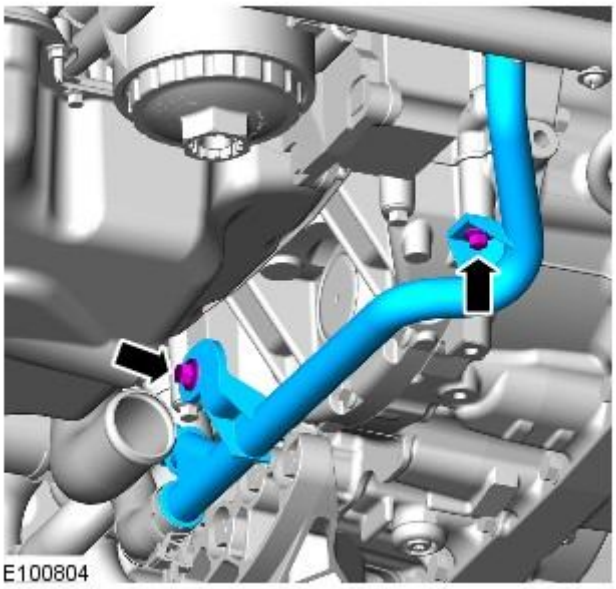
E100804

12. Release coolant pipe from the engine.

- Remove the 2 bolts.

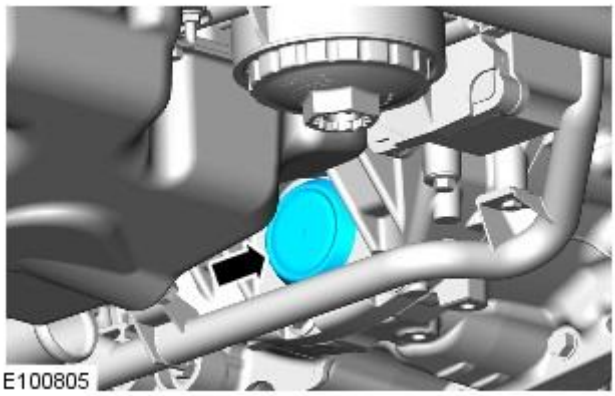
E100805

13. Remove the flexplate cover.

14. Release the torque convertor from the flexplate.

- Remove the 6 bolts.

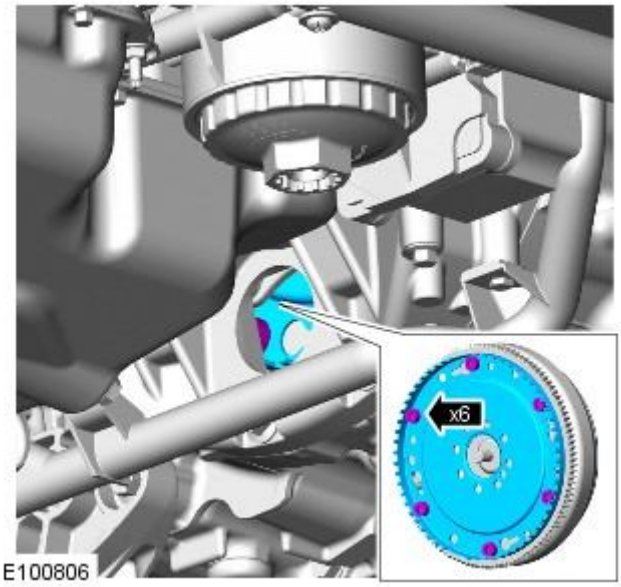

15. Disconnect the 2 transmission fluid cooler tubes.

- Remove the 2 Torx bolts.
- Position aside.

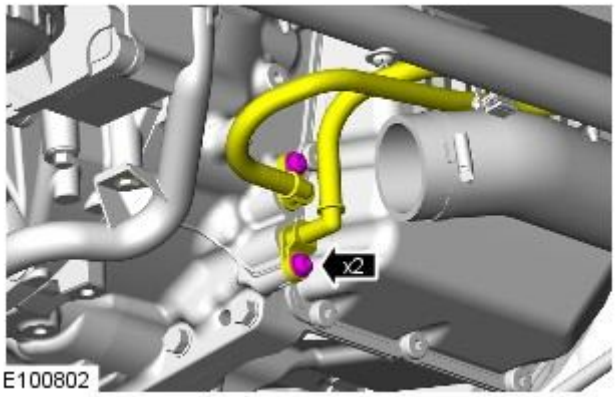

16. Lower the vehicle.

17. Disconnect the transmission control module (TCM) electrical connector.

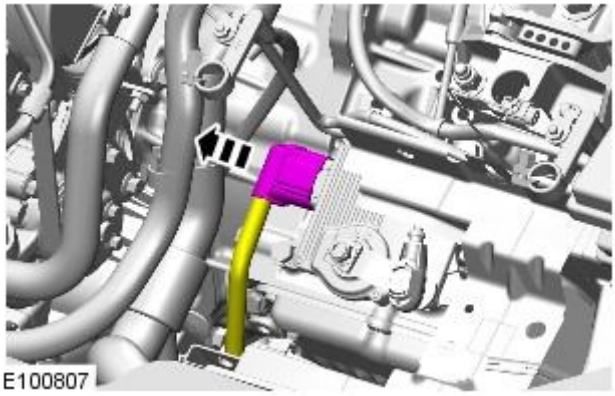

18. Release the transmission selector cable from the bracket.

- Release the locking sleeve and release from the bracket.

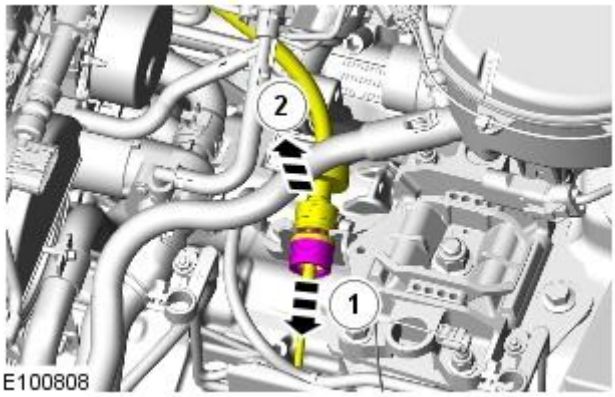

19. Release the transmission selector lever cable from the TCM.

- Remove the nut.
- Release the selector cable and lever.
- Position aside.

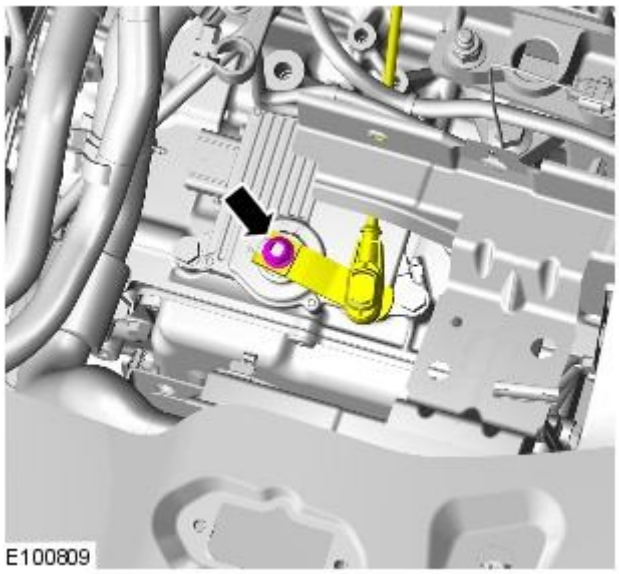

20. Disconnect the battery ground cable.

- Remove the bolt.

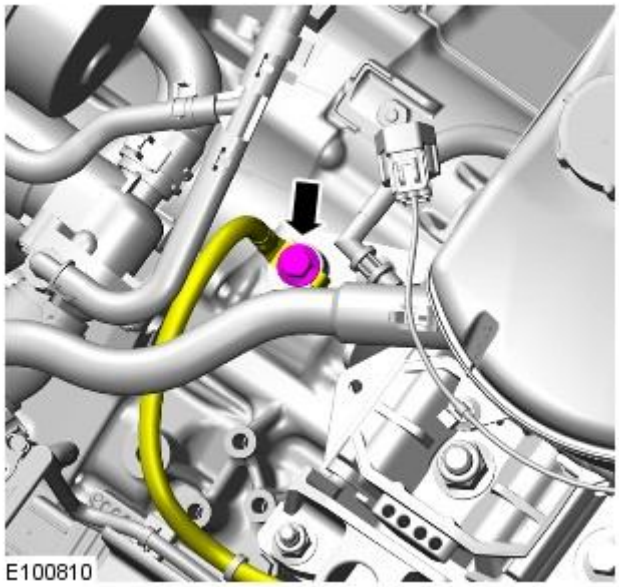

21. Using the special tool, support the engine and transmission assembly.

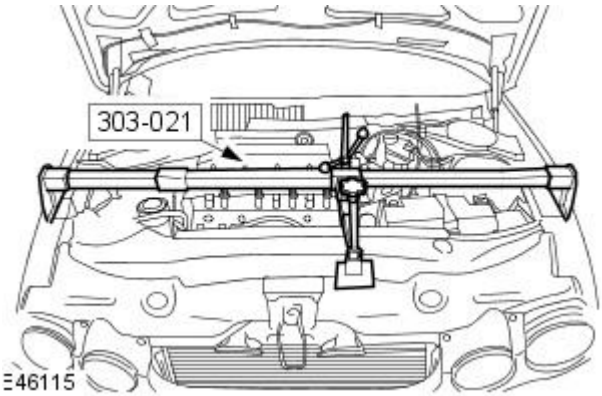

22. Release the transmission mounting.

- Remove the nut.

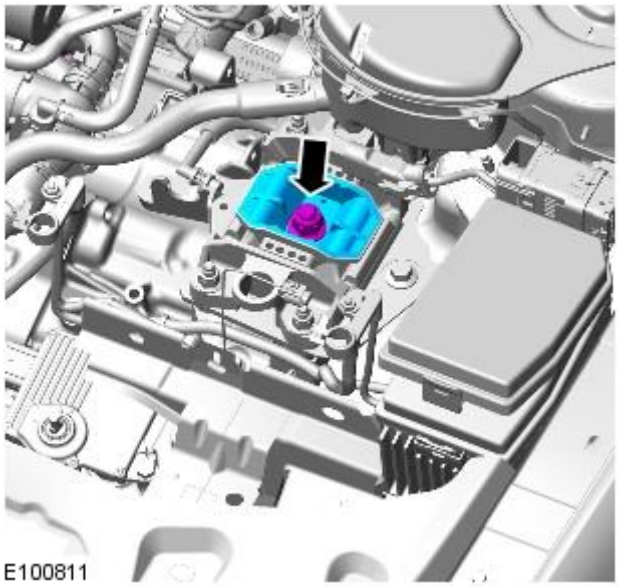

23. Lower the engine sufficiently allowing the transmission assembly to clear the mounting.

24. Remove the 3 transmission assembly upper bolts.

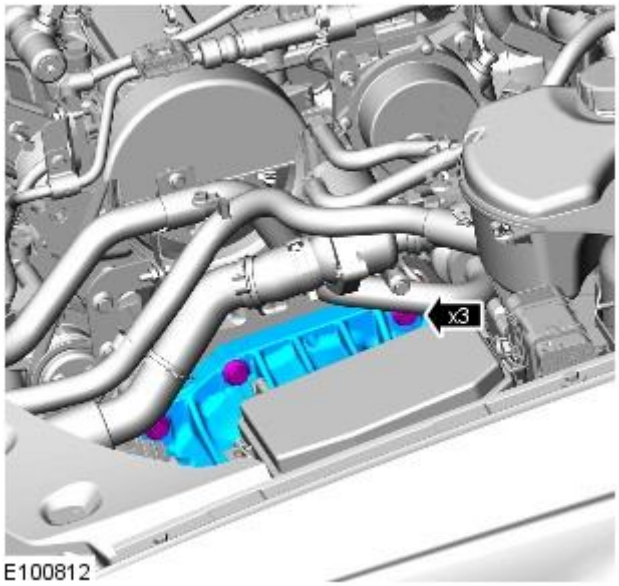

25. Raise the vehicle.

26. Remove the 2 transmission assembly rear bolts.

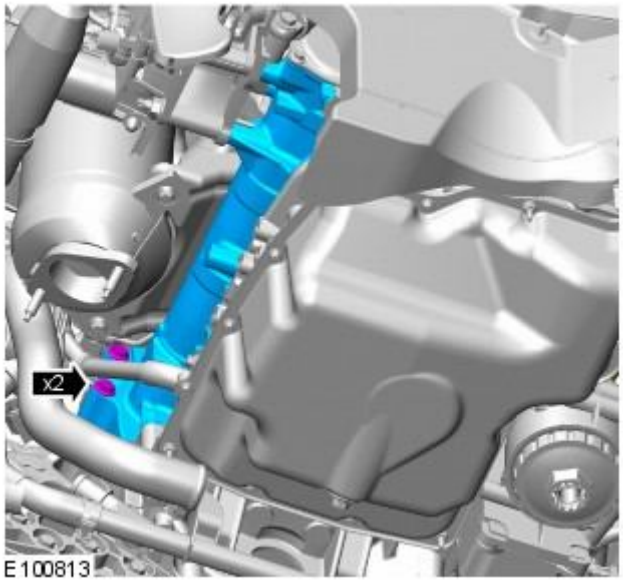

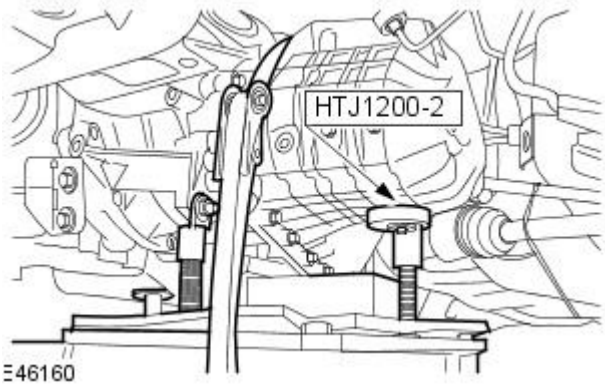

27. NOTE: Some variation in the illustrations may occur, but the essential information is always correct.

Align the powertrain assembly jack to the transmission.

- Secure the transmission to the powertrain assembly jack.

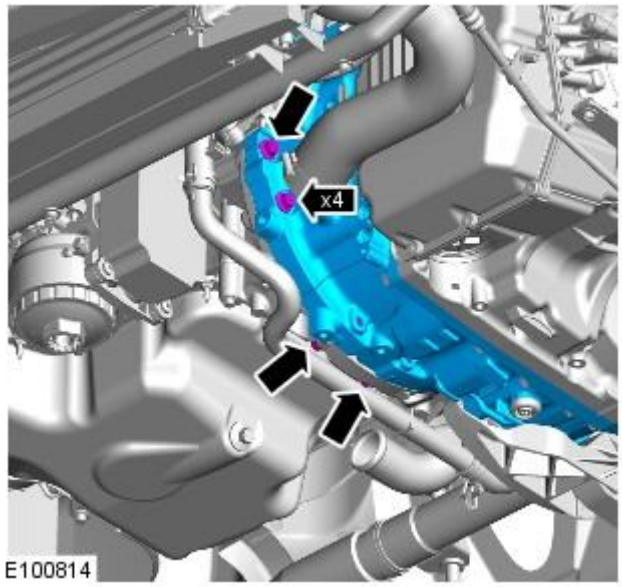

28. Remove the 4 transmission assembly lower bolts.

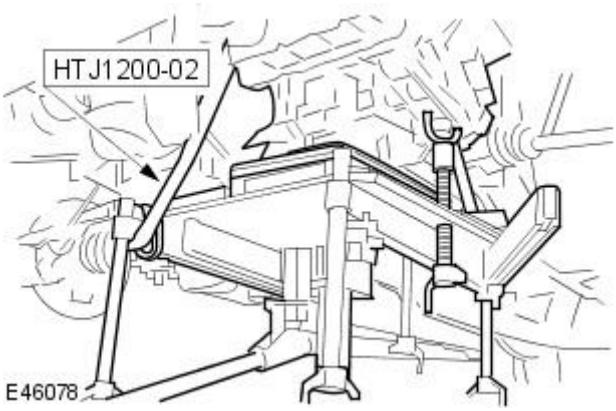

29. Remove the transmission.

- Detach the transmission from the drive plate.
- Lower the powertrain assembly jack and transmission assembly.

Automatic Transmission / Transaxle - Vehicles With: 6-Speed Automatic Transaxle - AWF21 - Transmission

Installation

Special Tool(s)	
	Power train assembly jack HTJ1200-2
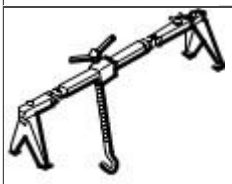	Engine support bracket 303-021

Installation

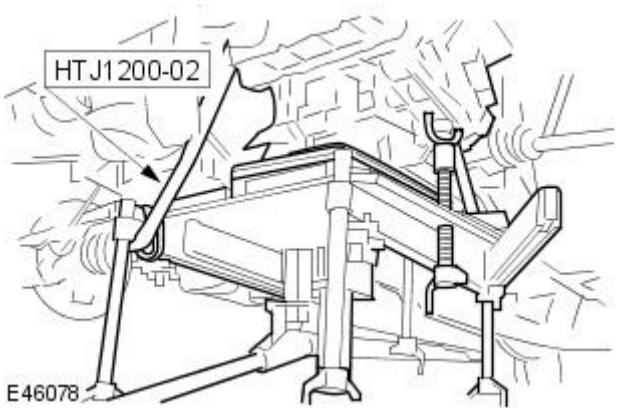

1. Install the transmission.

- Raise the powertrain assembly jack and transmission assembly.

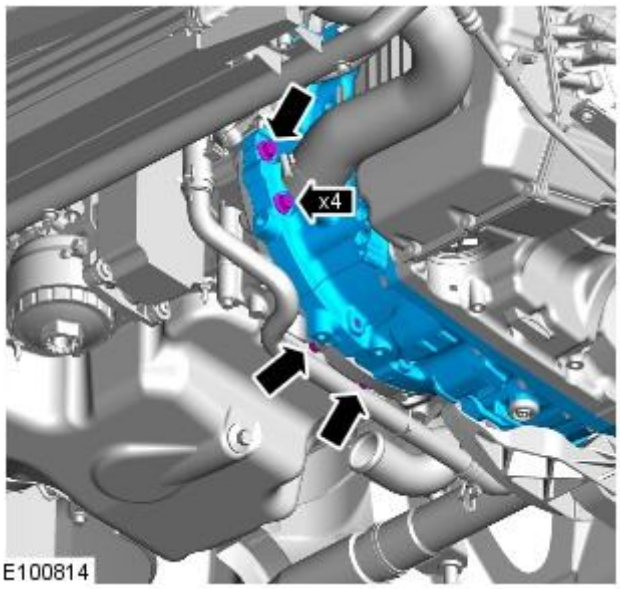

2. Install the transmission assembly lower bolts.

- Tighten the bolts to 48 Nm.

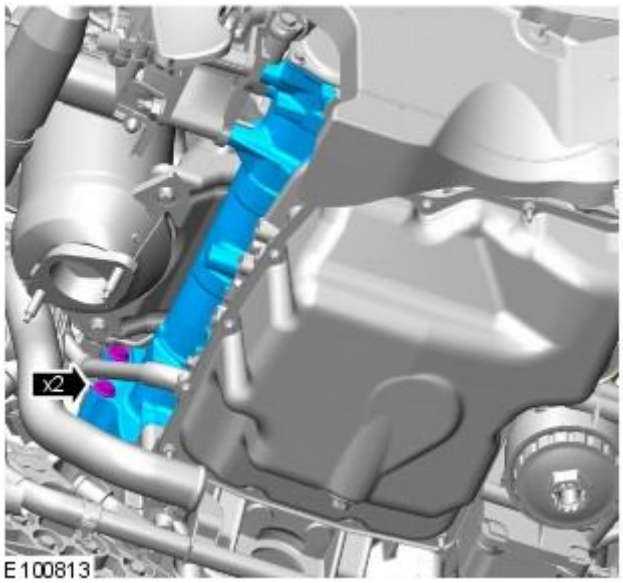

3. Install the transmission assembly rear bolts.

- Tighten the bolts to 48 Nm.

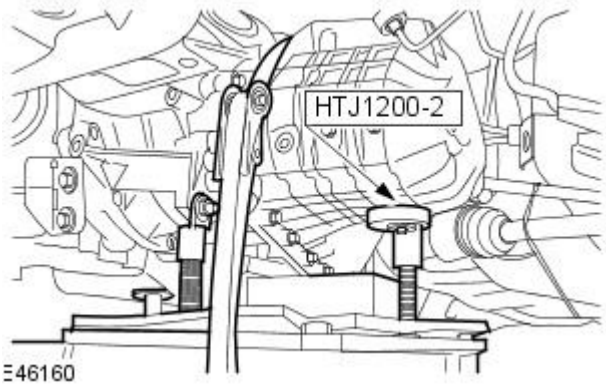

4. NOTE: Some variation in the illustrations may occur, but the essential information is always correct.

Remove the powertrain assembly jack.

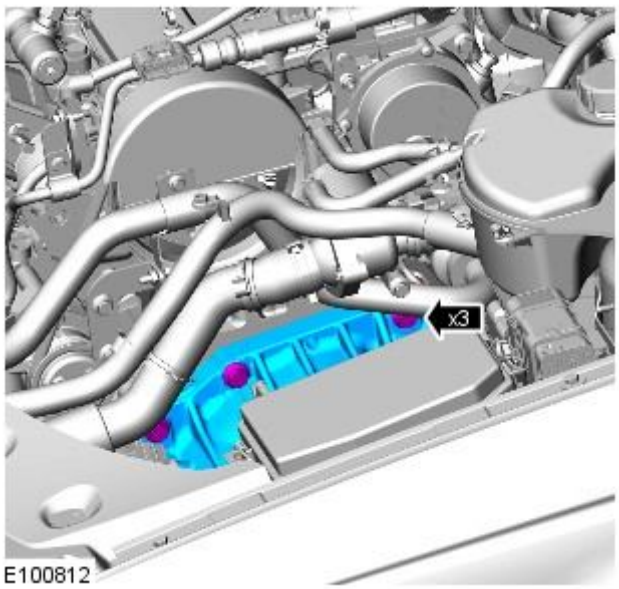

5. Lower the vehicle.

6. Install the transmission assembly upper bolts.

- Tighten the bolts to 48 Nm.

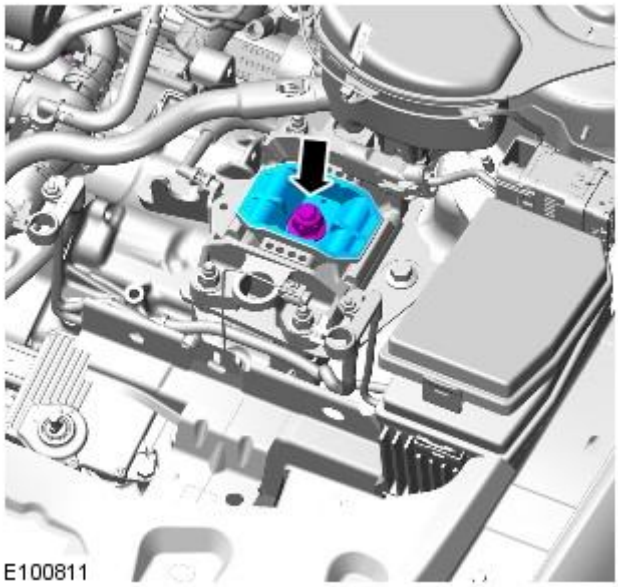

7. Raise the engine and transmission assembly onto the mounting.

- Tighten the nut to 130 Nm.

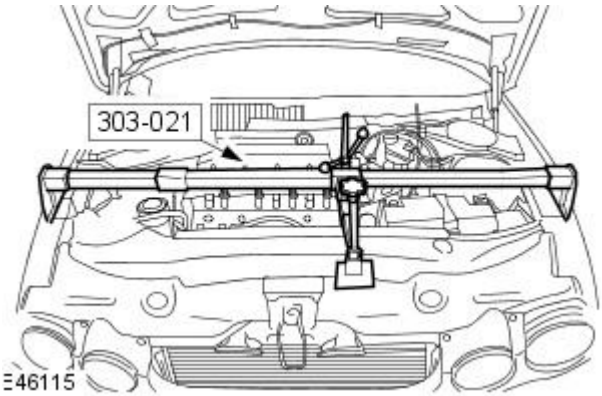

8. Remove the special tool.

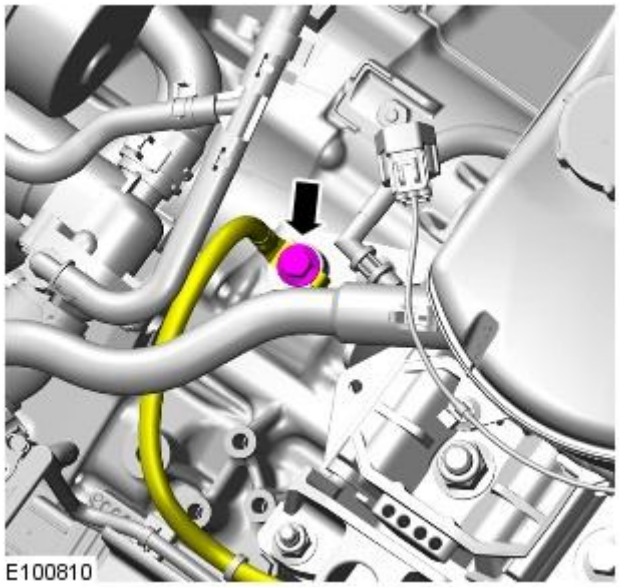

9. Attach the battery ground cable.

- Tighten the bolt to 25 Nm.

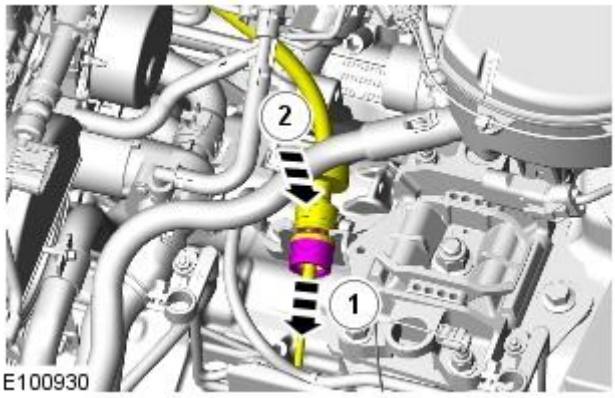

10. Attach the transmission selector cable to the bracket.

- Release the locking sleeve and attach to the bracket.

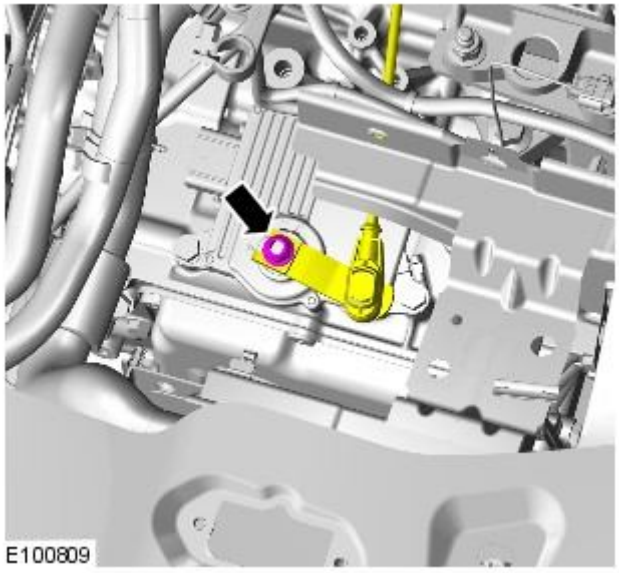

11. Attach the transmission selector cable and lever to the transmission control module (TCM).

- Tighten the nut to 13 Nm.

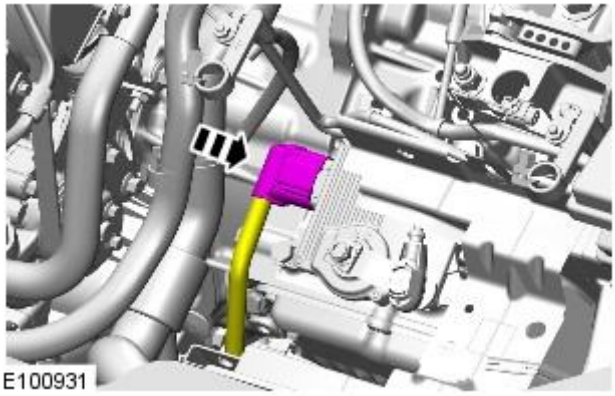

12. Connect the TCM electrical connector.

13. Raise the vehicle.

14. Connect the transmission fluid cooler tubes.

- Tighten the bolts to 10 Nm.

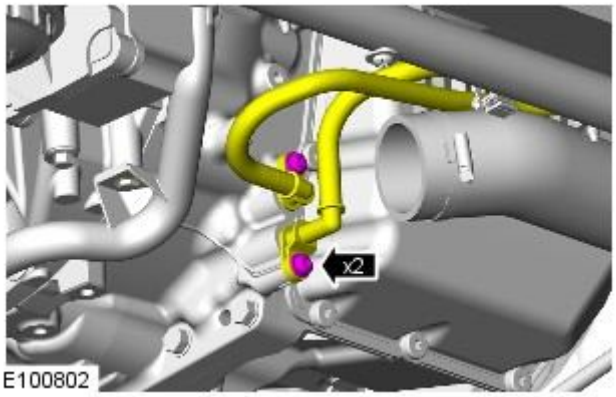

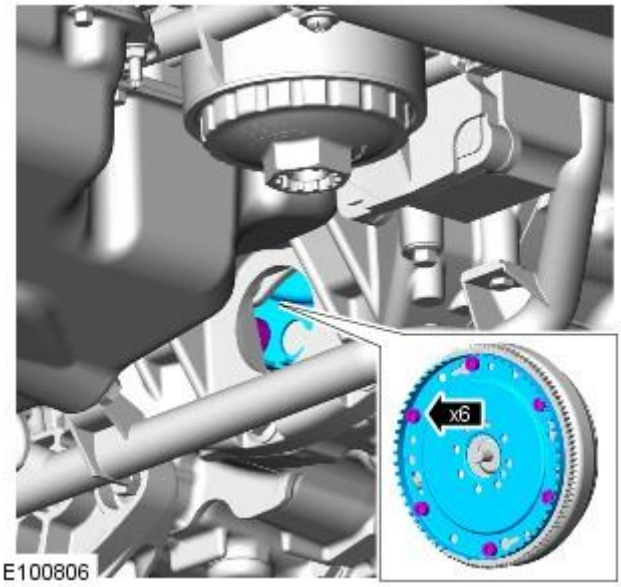

15. Secure the torque convertor to the flexplate.

- Tighten the bolts 60 Nm.

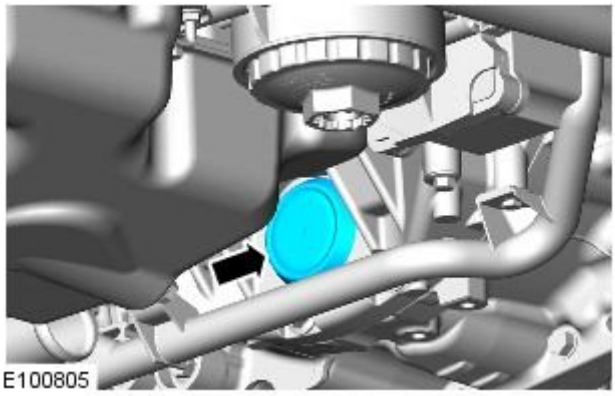

16. Install the flexplate cover.

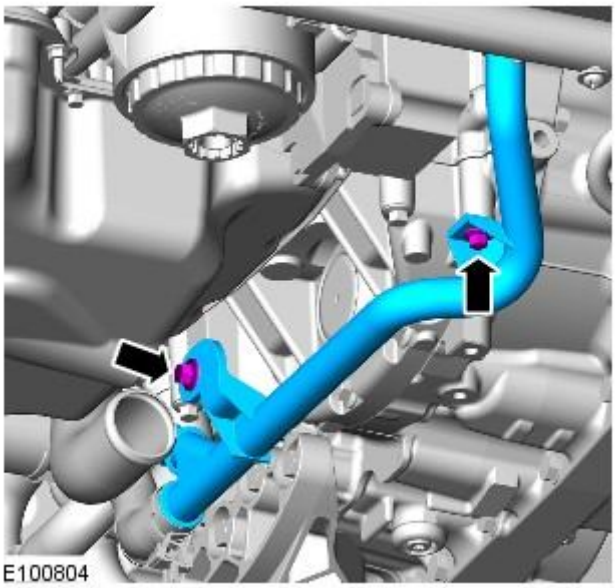

17. Secure the coolant pipe to the engine.

- Tighten the bolts to 10 Nm.

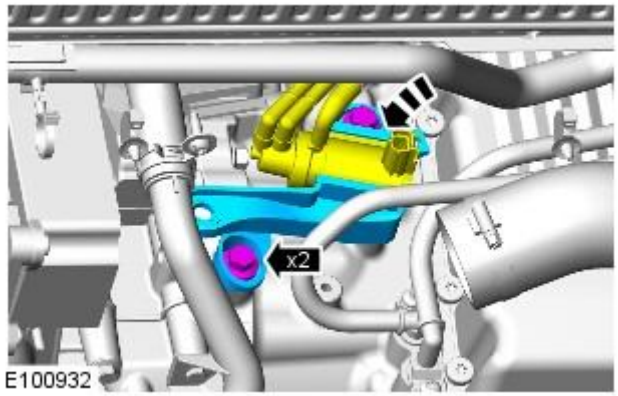

18. Secure the emission control valve.

- Tighten the bolts to 30 Nm.

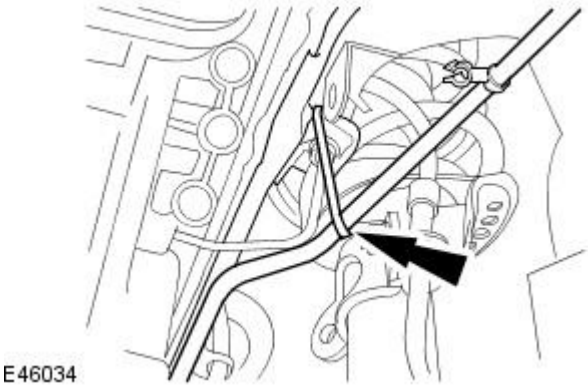

19. Release the power steering fluid pipe.

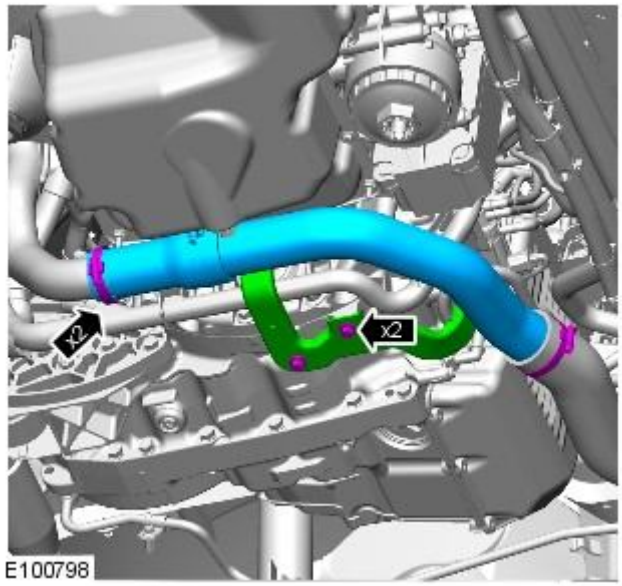

20. Install the charge air cooler intake pipe.

- Tighten the hose clips.
- Tighten the bolts to 35 Nm.

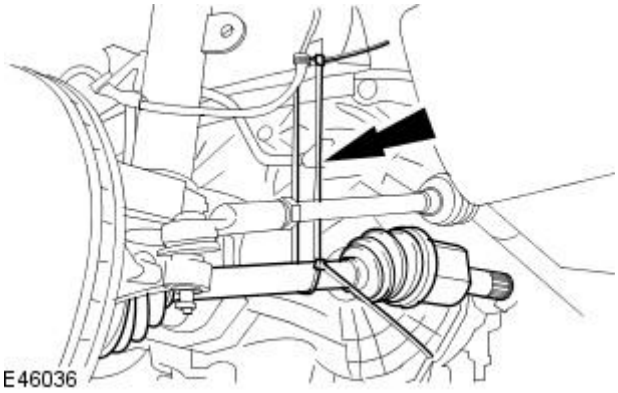

21. CAUTION: Make sure the halfshaft constant velocity (CV) joints do not over articulate. Failure to follow this instruction may result in damage to the CV joints.

Release the LH halfshaft.

22. Attach the LH halfshaft to the transmission.

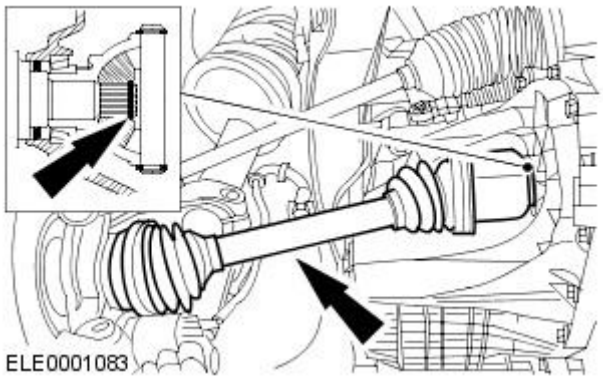

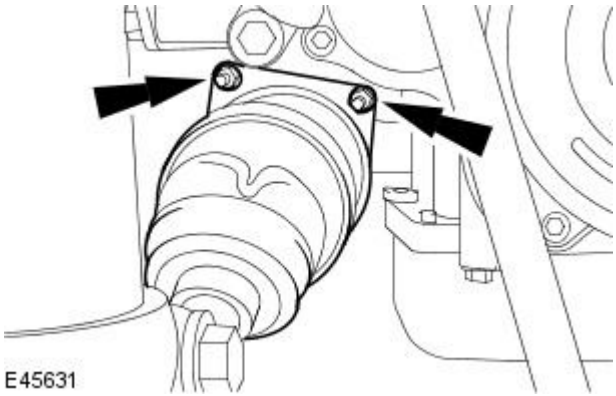

23. CAUTION: Make sure the halfshaft constant velocity (CV) joints do not over articulate. Failure to follow this instruction may result in damage to the CV joints.

Attach the RH halfshaft to the transmission.

- Engage the RH halfshaft to the transmission.
- Tighten the bolts to 25 Nm.

24. Install the front subframe.
For additional information, refer to: Front Subframe - 2.0L Duratorq-TDCi/2.2L Duratorq-TDCi (110kW/150PS) - Puma (502-00 Uni-Body, Subframe and Mounting System, Removal and Installation).

25. Lower the vehicle.

26. Install the battery tray.
For additional information, refer to: Battery Tray (414-01 Battery, Mounting and Cables, Removal and Installation).

27. Refill the transmission with fluid.
For additional information, refer to: Transmission Fluid Drain and Refill (307-01B Automatic Transmission/Transaxle - Vehicles With: 6-Speed Automatic Transaxle - AWF21, General Procedures).

28. Connect the battery ground cable.
For additional information, refer to: Battery Disconnect and Connect (414-01 Battery, Mounting and Cables, General Procedures).

29. NOTE: For NAS vehicles only.

If required, carry out a long drive cycle.
For additional information, refer to: Powertrain Control Module (PCM) Long Drive Cycle Self-Test (303-14A Electronic Engine Controls - 2.0L NA V6 - AJV6/2.5L NA V6 - AJV6/3.0L NA V6 - AJ27, General Procedures).

Published: 11-May-2011

Transmission / Transaxle Cooling - Vehicles With: 5-Speed Automatic Transaxle - JATCO -

General Specifications

Item	Specification
Automatic transmission fluid	WSS-M2C922-A1

Torque Specifications

Description	Nm	lb-ft	lb-in
Automatic transmission fluid cooler tube union	35	26	-

Published: 11-May-2011

Transmission / Transaxle Cooling - Vehicles With: 5-Speed Automatic Transaxle - JATCO - Transmission CoolingVehicles With: 5-Speed Automatic Transaxle - JATCO

Description and Operation

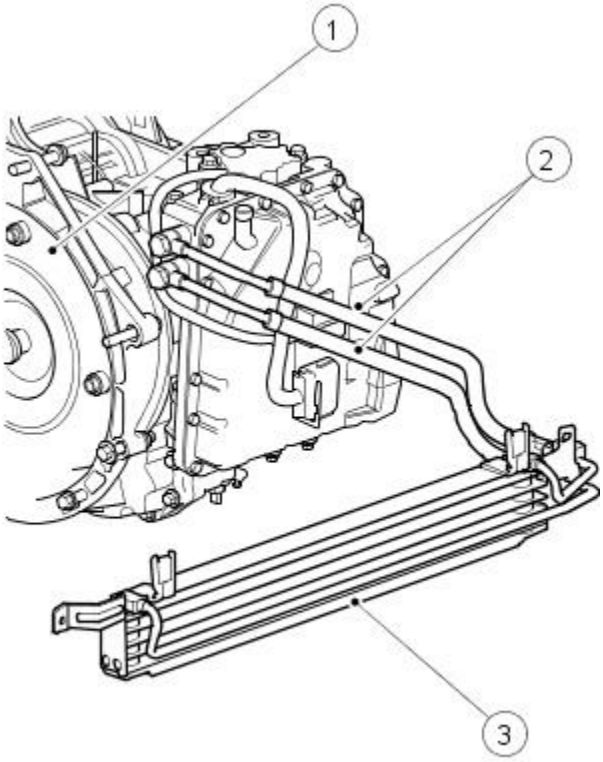

VUJ0004552

Item	Part Number	Description
1	—	Automatic transmission
2	—	Transmission fluid cooler tubes
3	—	Transmission fluid cooler

Transmission fluid cooler

The transmission fluid cooler is of an aluminium construction consisting of a tube and louvered fin core-type, the tubes are arranged horizontally for the crossflow of the oil.

A thermostatic control valve is incorporated in the transmission fluid cooler, this maintains the transmission fluid at the optimum temperature for use in the transmission.

When carrying out automatic transmission procedures any drained fluid should be checked thoroughly for any metal filings or particles. If metal filings or particles are evident the automatic transmission fault should be located followed by a thorough flushing of the fluid cooler and fluid cooler lines.

Published: 11-May-2011

Transmission / Transaxle Cooling - Vehicles With: 5-Speed Automatic Transaxle - JATCO - Transmission Cooling

Diagnosis and Testing

Inspection and Verification

1. **1.** Verify the customer concern by operating the system.
2. **2.** Visually inspect for obvious signs of mechanical or electrical damage.

Visual Inspection Chart

Mechanical
• Feed and return tubes • Connections to the automatic transmission and the automatic transmission fluid cooler. • Automatic transmission fluid level

3. **3.** If an obvious cause for an observed or reported concern is found, correct the cause (if possible) before proceeding to the next step.
4. **4.** If the concern is not visually evident, verify the symptom and refer to the Symptom chart.

Symptom Chart

Symptom Chart

Symptom	Possible Sources	Action
Loss of automatic transmission fluid.	* Connections to the automatic transmission and the automatic transmission fluid cooler.	* Check the torque of the tubes, if correct, check the tubes and connections.
Loss of the automatic transmission fluid.	* Leak at transmission fluid cooler.	* INSTALL new transmission fluid cooler.

Transmission / Transaxle Cooling - Vehicles With: 5-Speed Automatic Transaxle - JATCO - Transmission Fluid Cooler

Removal and Installation

Special Tool(s)	
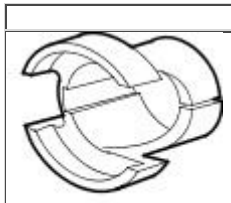 310044	Quick fit connector releasing tool 310-044

Removal

WARNING: Whenever releasing the transmission cooling system fluid, take care to prevent fluid scalding. Failure to follow these instructions may result in personal injury.

1. Remove the front bumper. For additional information, refer to Section 501-19 Bumpers.

2. NOTE: Lower transmission fluid cooler tube shown, upper similar.

• NOTE: Allow the fluid to drain into a suitable container.

Detach the transmission cooler tube.

1. Install the special tool.
2. Detach the transmission cooler tube.

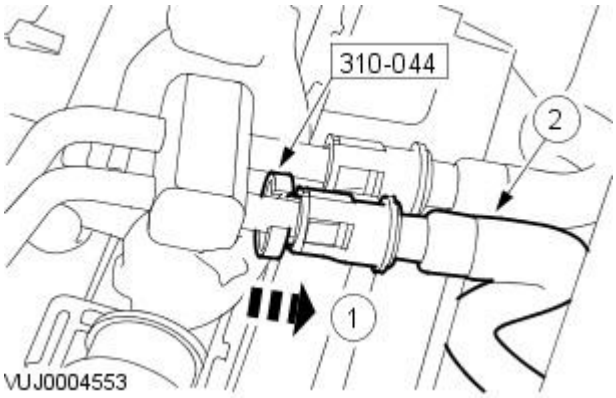

3. Detach the power assisted steering oil cooler.

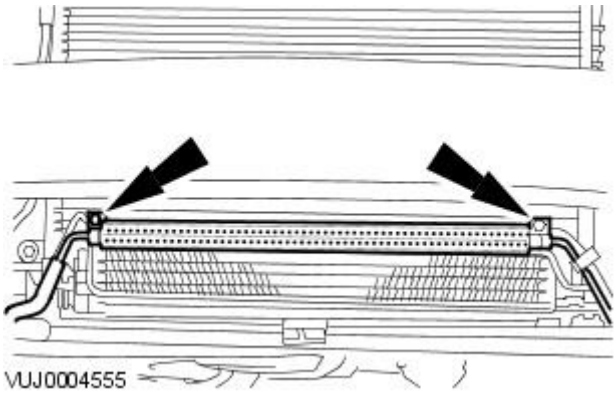

4. Remove the transmission fluid cooler.

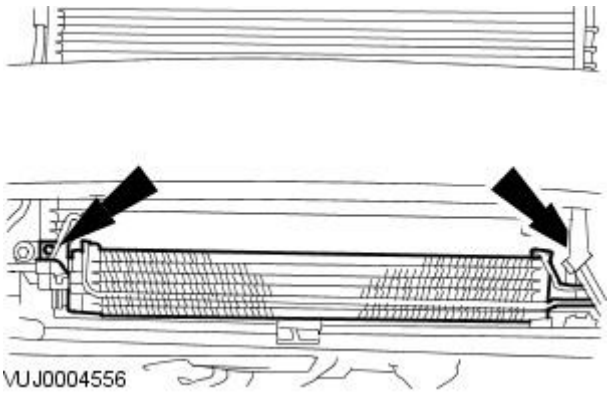

Installation

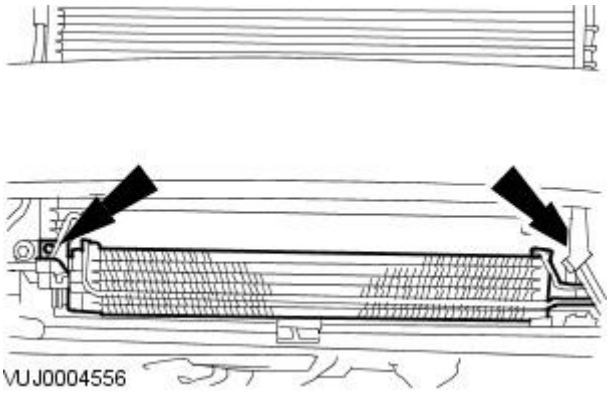

1. To install reverse the removal procedure.

1. Tighten to 7 Nm.

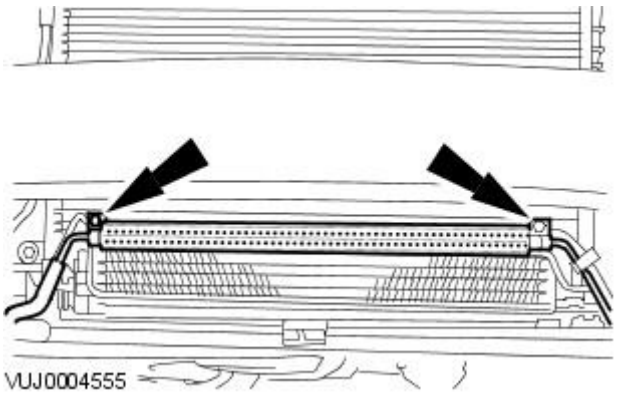

2. Tighten to 7 Nm.

3. CAUTION: Use of any transmission fluid other than the recommended fluid, will cause transmission damage.

Carry out a transmission fluid level check. For additional information, refer to Section 307-01A Automatic Transmission/TransaxleSection 307-01B Automatic Transmission/Transaxle.

Transmission / Transaxle Cooling - Vehicles With: 5-Speed Automatic Transaxle - JATCO - Transmission Fluid Cooler Tubes

Removal and Installation

Removal

WARNING: Whenever releasing the transmission cooling system fluid, take care to prevent fluid scalding. Failure to follow these instructions may result in personal injury.

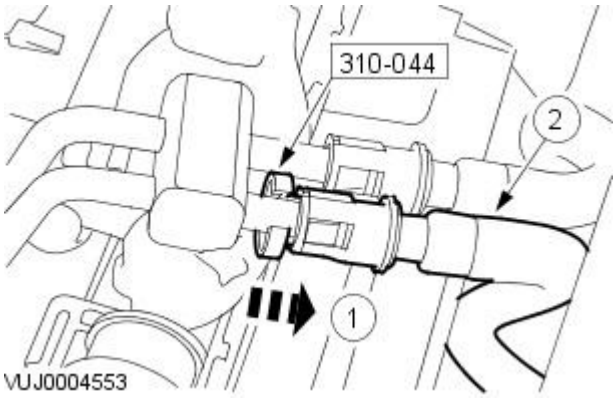

1. Remove the undertray. For additional information, refer toSection 501-02 Front End Body Panels.

2. NOTE: Lower transmission fluid cooler tube shown, upper similar.

• NOTE: Allow the fluid to drain into a suitable container.

Detach the transmission cooler tube.

1. Install the special tool.
2. Detach the transmission cooler tube.

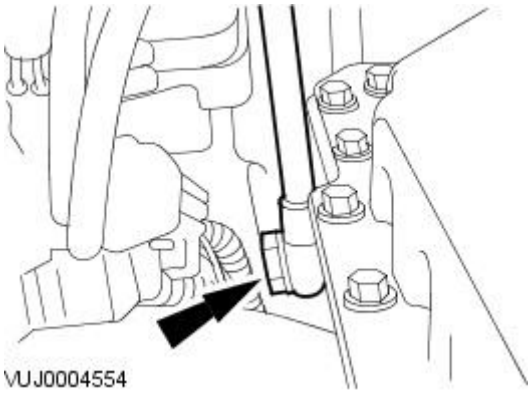

3. NOTE: Lower transmission fluid cooler tube shown, upper similar.

Remove the transmission fluid cooler tube.

- Remove and discard the sealing washers.

Installation

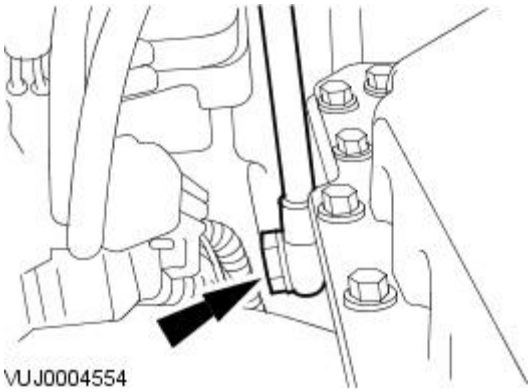

1. NOTE: Lower transmission fluid cooler tube shown, upper similar.

To install reverse the removal procedure.

- Install new sealing washers.
- Tighten to 35 Nm.

2. CAUTION: Use of any transmission fluid other than the recommended fluid, will cause transmission damage.

Carry out a transmission fluid level check. For additional information, refer to Section 307-01A Automatic Transmission/TransaxleSection 307-01B Automatic Transmission/Transaxle.

Published: 11-May-2011

Transmission / Transaxle Cooling - Vehicles With: 6-Speed Automatic Transaxle - AWF21 -

General Specifications

Item	Specification
Automatic transmission fluid	WSS-M2C922-A1

Torque Specifications

Description	Nm	lb-ft	lb-in
Automatic transmission fluid cooler tube union	35	26	-

Transmission / Transaxle Cooling - Vehicles With: 6-Speed Automatic Transaxle - AWF21 - Transmission CoolingVehicles With: 6-Speed Automatic Transaxle - AWF21

Description and Operation

COMPONENT LOCATION - AW F21 6 SPEED AUTOMATIC TRANSMISSION - FROM 2009MY

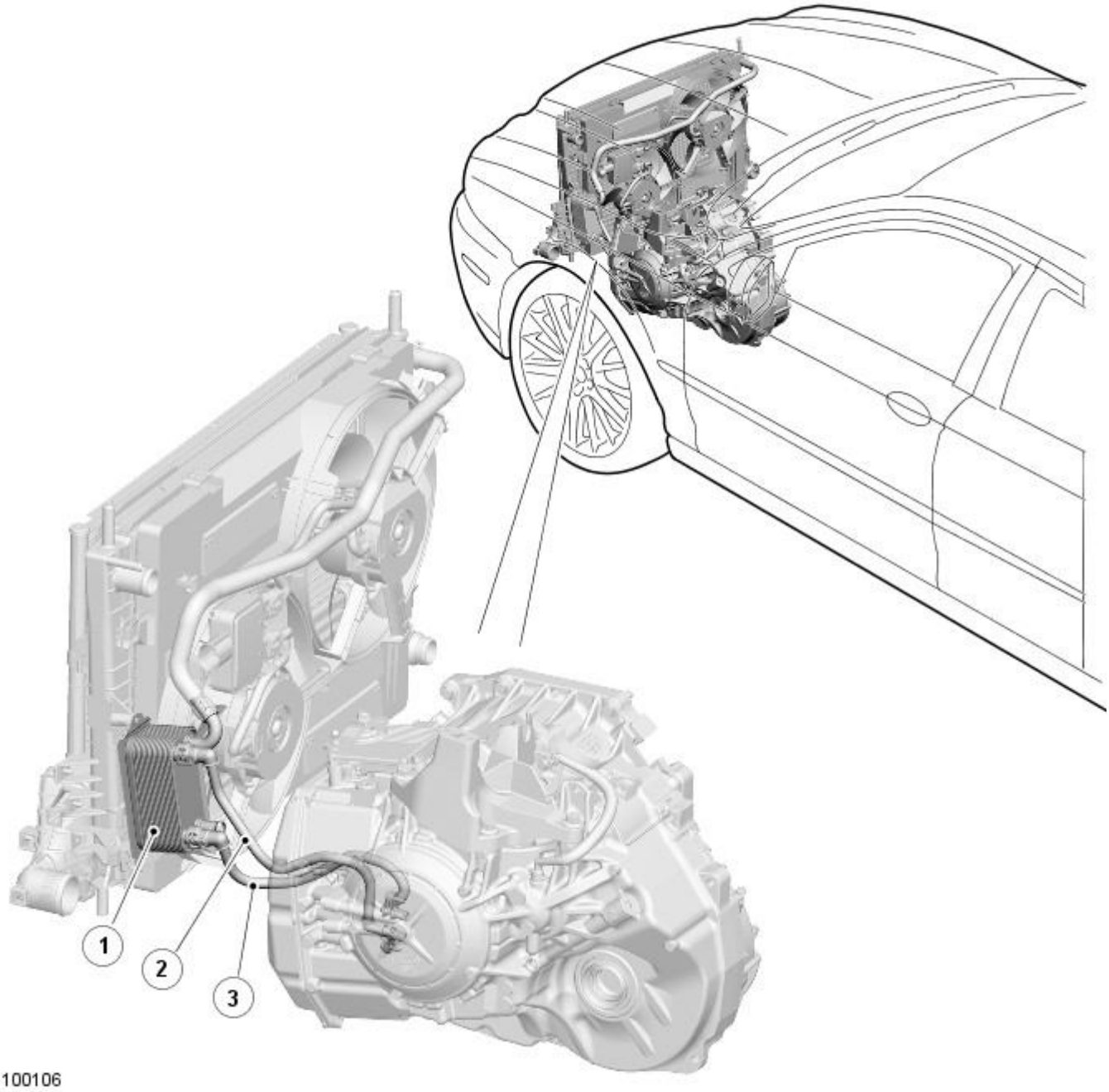

Item	Part Number	Description
1	-	Transmission fluid cooler
2	-	Transmission fluid pipe - to transmission
3	-	Transmission fluid pipe - from transmission

OVERVIEW

The AW F21 transmission uses an external fluid cooler to reduce the temperature of the transmission fluid.

SYSTEM OPERATION

Fluid is supplied from the transmission fluid pump into the lower connection of the cooler. After passing through the cooler, the fluid passes out of the upper connection and is returned to the transmission fluid pan.

SYSTEM DESCRIPTION

The transmission fluid cooler is attached to the LH (left-hand) end of the radiator. The fluid cooler is an aluminum housing comprising louvred fins and plates. The plates allow a cross-flow of transmission fluid and engine coolant through the cooler. The plates are immersed in engine coolant from the 'cold' side of the radiator which provides cooling of the transmission fluid by the temperature differential between the transmission fluid and the engine coolant.

The radiator is divided so that any coolant passing through the top quarter of the radiator will also pass through the transmission oil cooler. There is a variable restrictor in the coolant bottom hose to allow the correct coolant flow through the transmission fluid cooler to optimise the transmission fluid cooling performance.

Published: 11-May-2011

Transmission / Transaxle Cooling - Vehicles With: 6-Speed Automatic Transaxle - AWF21 - Transmission Cooling

Diagnosis and Testing

Inspection and Verification

1. **1.** Verify the customer concern by operating the system.
2. **2.** Visually inspect for obvious signs of mechanical or electrical damage.

Visual Inspection Chart

Mechanical
• Feed and return tubes • Connections to the automatic transmission and the automatic transmission fluid cooler. • Automatic transmission fluid level

3. **3.** If an obvious cause for an observed or reported concern is found, correct the cause (if possible) before proceeding to the next step.
4. **4.** If the concern is not visually evident, verify the symptom and refer to the Symptom chart.

Symptom Chart

Symptom Chart

Symptom	Possible Sources	Action
Loss of automatic transmission fluid.	* Connections to the automatic transmission and the automatic transmission fluid cooler.	* Check the torque of the tubes, if correct, check the tubes and connections.
Loss of the automatic transmission fluid.	* Leak at transmission fluid cooler.	* INSTALL new transmission fluid cooler.

Transmission / Transaxle Cooling - Vehicles With: 6-Speed Automatic Transaxle - AWF21 - Transmission Fluid Cooler

Removal and Installation

Removal

1. Drain the cooling system.
   For additional information, refer to: Cooling System Draining, Filling and Bleeding (303-03B Engine Cooling - 2.0L Duratorq-TDCi/2.2L Duratorq-TDCi (110kW/150PS) - Puma, General Procedures).

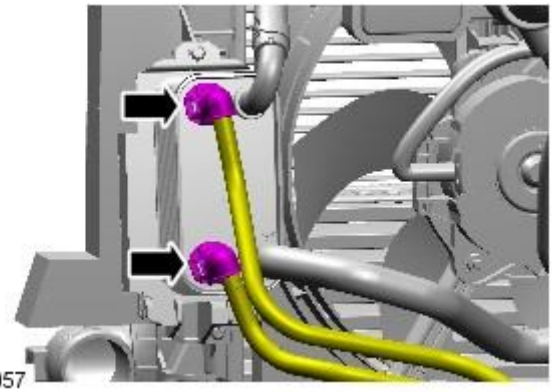

E102057

2. WARNING: Be prepared to catch escaping fluid.

• NOTE: Use suitable paper to absorb and escaping fluid.

   Disconnect the 2 transmission fluid cooler tubes from the transmission fluid cooler.

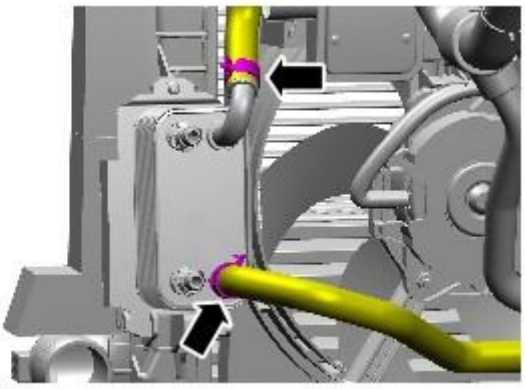

E102058

3. WARNING: Be prepared to catch escaping fluid.

   Disconnect the 2 coolant hoses from the transmission fluid cooler.

   - Release the 2 clips.

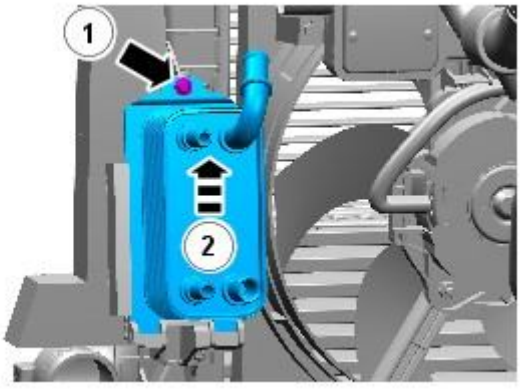

E102059

4. Remove the Torx screw securing the transmission fluid cooler to the cooling pack.

   - Release the transmission fluid cooler from the cooling pack.

Installation

1. To install, reverse the removal procedure.
2. Check automatic transmission fluid level.
   For additional information, refer to: Transmission Fluid Level Check (307-01B Automatic Transmission/Transaxle - Vehicles With: 6-Speed Automatic Transaxle - AWF21, General Procedures).

Transmission / Transaxle Cooling - Vehicles With: 6-Speed Automatic Transaxle - AWF21 - Transmission Fluid Cooler Return Tube

Removal and Installation

Removal

1. Remove the radiator splash shield.
   For additional information, refer to: Radiator Splash Shield (501-02 Front End Body Panels, Removal and Installation).
2. Remove the charge air cooler intake pipe.
   - Release the 2 hose clips.
   - Remove the 2 bolts.

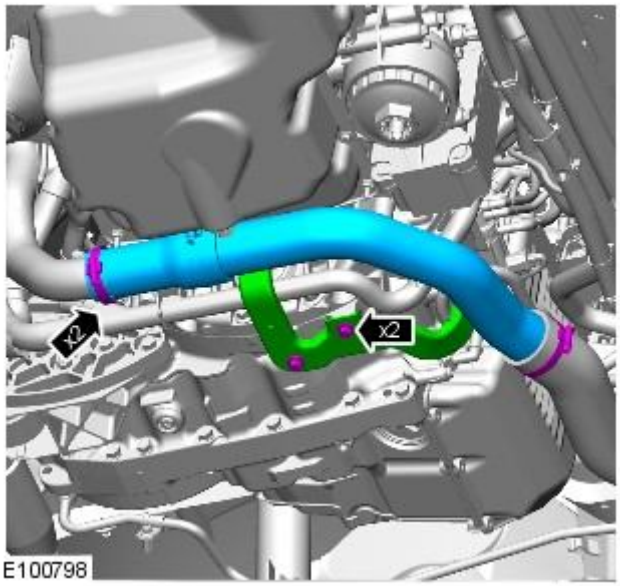

E100798

3. WARNING: Be prepared to catch escaping fluid.

• NOTE: Use suitable paper to absorb and escaping fluid.

Disconnect the transmission fluid cooler return tube from the transmission.

- Remove the Torx bolt.

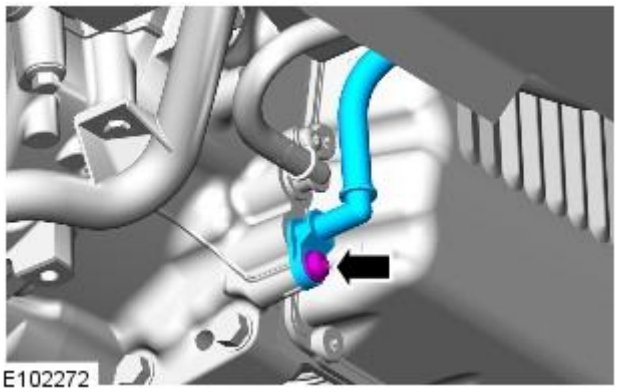
E102272

4. WARNING: Be prepared to catch escaping fluid.

• NOTE: Use suitable paper to absorb and escaping fluid.

Disconnect the transmission fluid cooler return tube from the transmission fluid cooler.

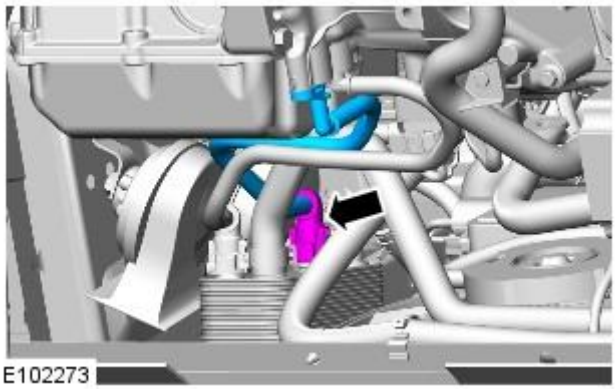
E102273

5. Remove the transmission fluid cooler supply tube.

Installation

1. Install the transmission fluid cooler supply tube.

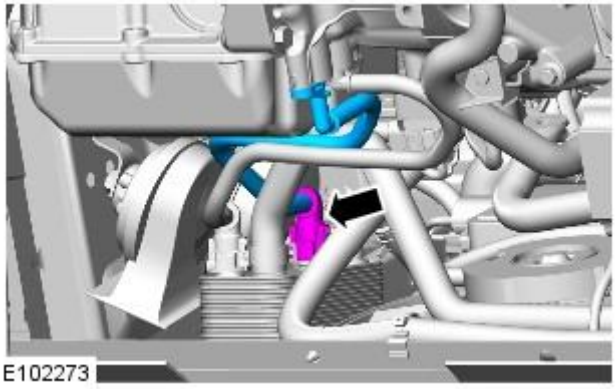

2. Connect the transmission fluid cooler return tube to the transmission fluid cooler.

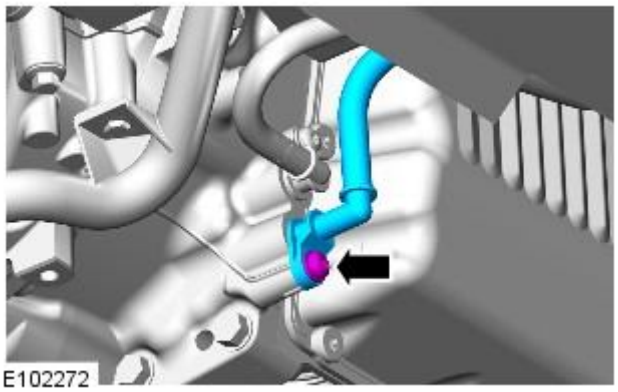

3. Connect the transmission fluid cooler return tube to the transmission.
   - Tighten to 10 Nm.

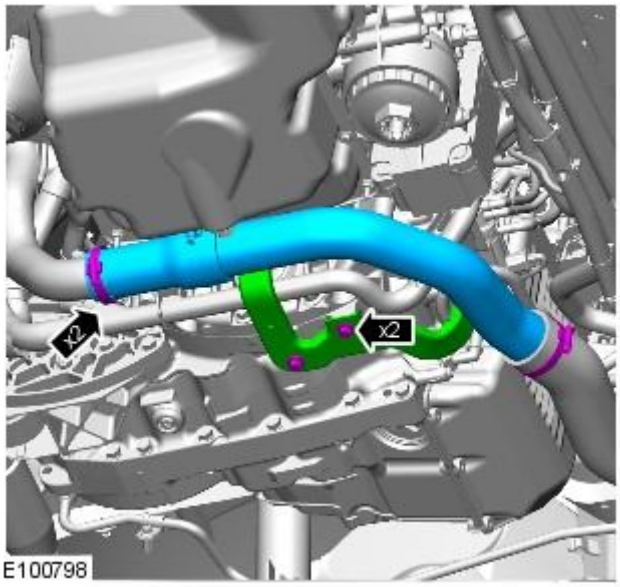

4. Install the charge air cooler intake pipe.
   - Tighten the hose clips.
   - Tighten the bolts to 35 Nm.

5. Check and top-up the transmission fluid level.
   For additional information, refer to: Transmission Fluid Level Check (307-01B Automatic Transmission/Transaxle - Vehicles With: 6-Speed Automatic Transaxle - AWF21, General Procedures).
6. Install the radiator splash shield.
   For additional information, refer to: Radiator Splash Shield (501-02 Front End Body Panels, Removal and Installation).

Transmission / Transaxle Cooling - Vehicles With: 6-Speed Automatic Transaxle - AWF21 - Transmission Fluid Cooler Supply Tube

Removal and Installation

Removal

1. Remove the radiator splash shield.
   For additional information, refer to: Radiator Splash Shield (501-02 Front End Body Panels, Removal and Installation).
2. Remove the charge air cooler intake pipe.
   - Release the 2 hose clips.
   - Remove the 2 bolts.

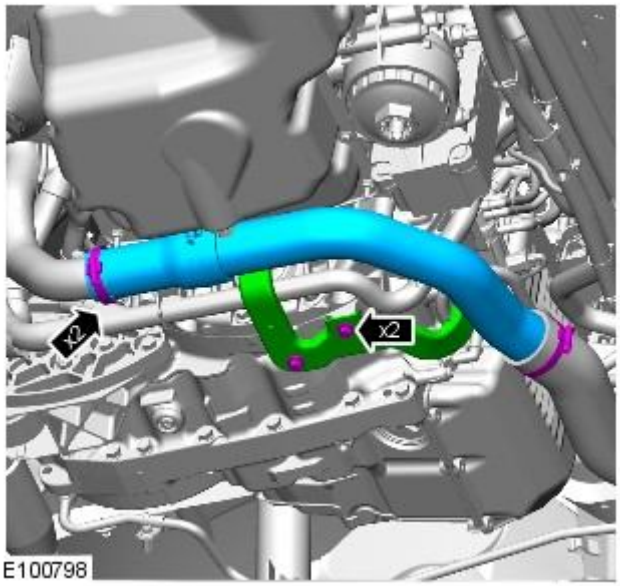

E100798

3. WARNING: Be prepared to catch escaping fluid.

• NOTE: Use suitable paper to absorb and escaping fluid.

   Disconnect the transmission fluid cooler supply tube from the transmission.
   - Remove the Torx bolt.

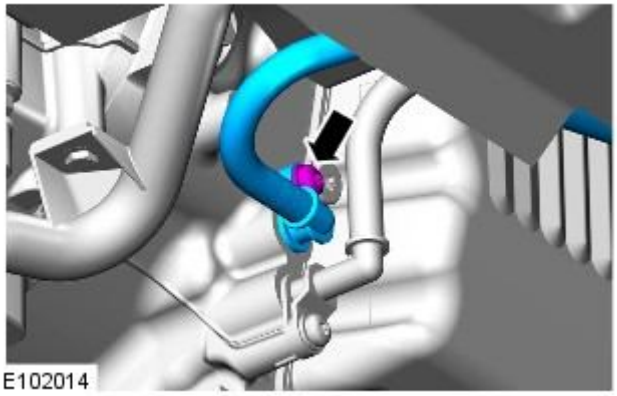
E102014

4. WARNING: Be prepared to catch escaping fluid.

• NOTE: Use suitable paper to absorb and escaping fluid.

   Disconnect the transmission fluid cooler supply tube from the transmission fluid cooler.

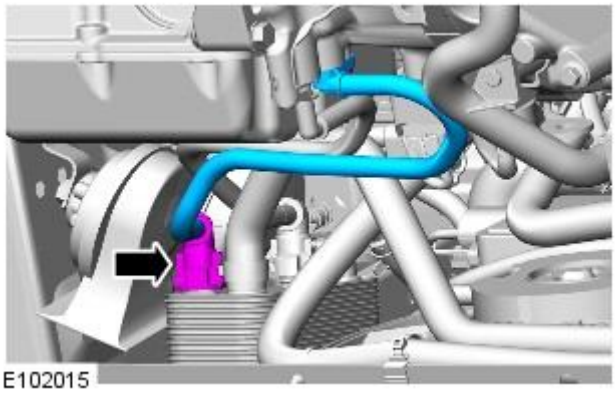
E102015

5. Remove the transmission fluid cooler supply tube.

Installation

1. Install the transmission fluid cooler supply tube.

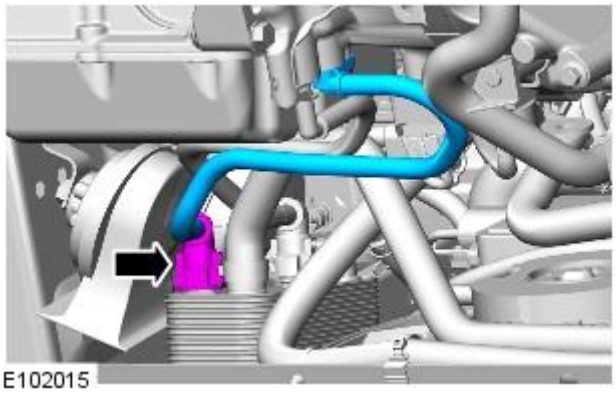

2. Connect the transmission fluid cooler supply tube to the transmission fluid cooler.

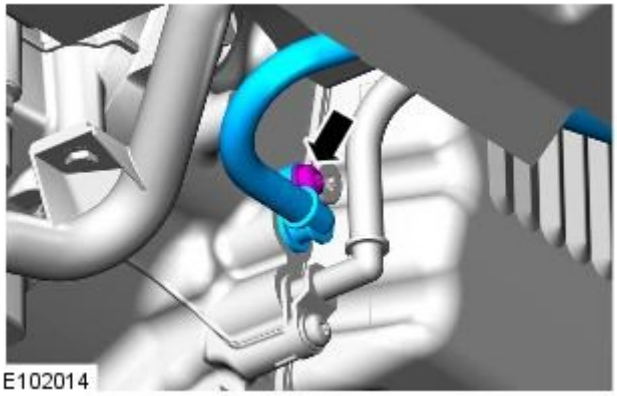

3. Connect the transmission fluid cooler supply tube to the transmission.
   - Tighten to 10 Nm.

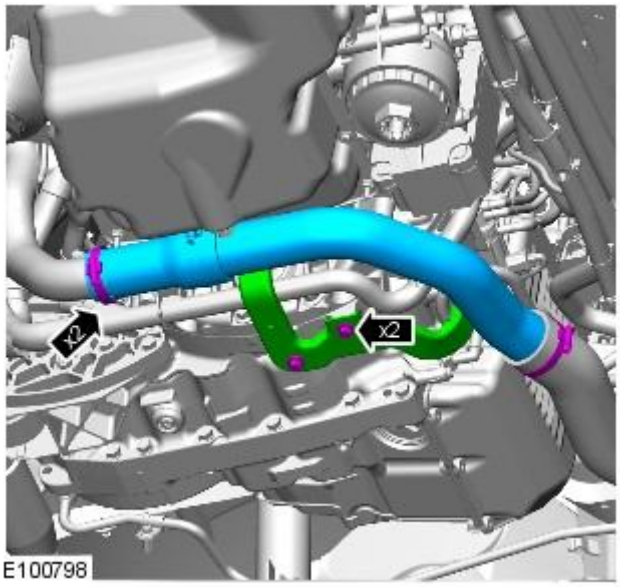

4. Install the charge air cooler intake pipe.
   - Tighten the hose clips.
   - Tighten the bolts to 35 Nm.

5. Check and top-up the transmission fluid level.
   For additional information, refer to: Transmission Fluid Level Check (307-01B Automatic Transmission/Transaxle - Vehicles With: 6-Speed Automatic Transaxle - AWF21, General Procedures).
6. Install the radiator splash shield.
   For additional information, refer to: Radiator Splash Shield (501-02 Front End Body Panels, Removal and Installation).

Published: 11-May-2011

Automatic Transmission / Transaxle External Controls - Vehicles With: 5-Speed Automatic Transaxle - JATCO -

Torque Specifications

Description	Nm	lb-ft	lb-in
Selector cable shield	10	7	-
Selector cable retaining bracket	10	7	-

Automatic Transmission / Transaxle External Controls - Vehicles With: 5-Speed Automatic Transaxle - JATCO - External ControlsVehicles With: 5-Speed Automatic Transaxle - JATCO

Description and Operation

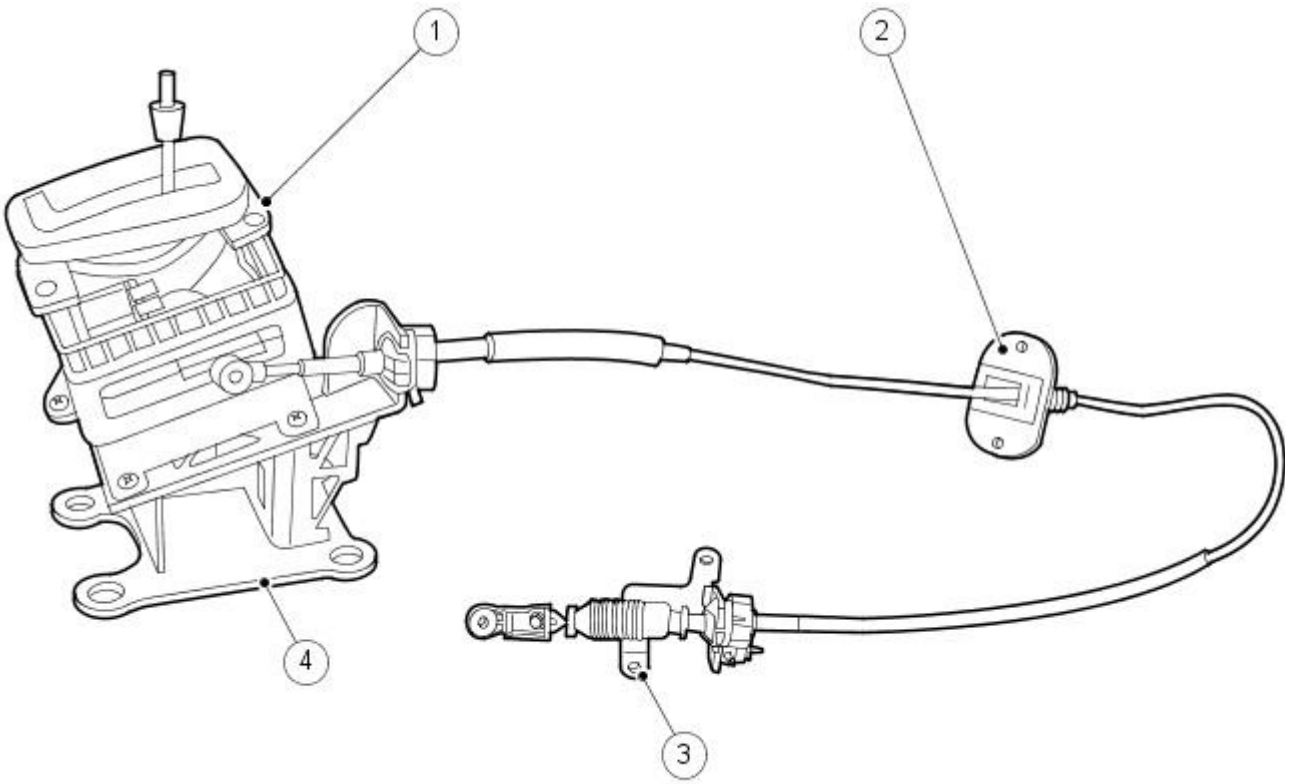

VUJ0003990

Item	Part Number	Description
1	—	Transmission selector lever.
2	—	Gear selector cable and bracket.
3	—	Gear selector cable retaining bracket.
4	—	Gear selector module bracket.

Transmission Selector Lever

The transmission selector lever:

- Has seven positions: PARK, REVERSE, NEUTRAL, DRIVE, FOURTH, THIRD and SECOND.
- Operates the transmission selector shaft in the PARK, REVERSE, NEUTRAL and DRIVE positions by means of a cable.
- Passes driver gearshift requests to the engine control module (ECM) via the rotary switch.
- Uses Hall effect switches and a micro controller inside the transmission selector lever to generate the electronic code.
- When moved to the left-hand side of the transmission selector lever allows manual electronic selection of FOURTH, THIRD and SECOND gears.

The NEUTRAL position switch:

- Is incorporated within the transmission rotary switch.

The transmission selector illumination module:

- Provides a red transmission lever position illumination to indicate the selected gear.
- Provides a green background for the transmission selector lever.

The transmission selector interlock solenoid:

- Prevents the transmission selector lever from being moved from the PARK position, unless the ignition switch is in **ON** position, and the brake pedal is pressed.
- Is controlled by an input from the ECM via the CAN bus.

The seven transmission selector positions are:

- P: The transmission is mechanically locked (starting enabled).
- R: Reverse gear.
- N: No power to the road wheels (starting enabled).
- D: All 5 forward gears available.
- 4: Upshift to 4th gear only.
- 3: Upshift to 3rd gear only.
- 2: Upshift to 2nd gear only.

The performance mode push button:

- is mounted on the transmission selector surround.
- selects Normal or Sport mode when pressed by the driver.
- is illuminated when Sport mode is selected.
- is hard-wired to the ECM.

The transmission selector at the transmission unit:

- is connected to the driver's selector module by a cable.
- operates the manual selector valve, which is part of the electro-hydraulic control unit.
- operates the rotary switch, which is connected to the ECM.

The transmission selector cable provides the positive link between the selector lever and the transmission. The transmission selector cable does not require adjustment.

Automatic Transmission / Transaxle External Controls - Vehicles With: 5-Speed Automatic Transaxle - JATCO - External Controls

Diagnosis and Testing

Inspection and Verification

1. **1.** Verify the customer concern.
2. **2.** Visually inspect for obvious signs of mechanical or electrical damage.

WARNING: Danger of accident. Apply the parking brake. Shift the gear selector to **P**. Failure to follow these instructions may result in personal injury.

Visual Inspection Chart

Mechanical	Electrical
• Visibly damaged or worn parts • Gear selector interlock solenoid • Brake pedal switch	• Fuse(s) • Wiring harness for damage or corrosion • Electrical connector(s)

3. **3.** If an obvious cause for an observed or reported concern is found, correct the cause (if possible) before proceeding to the next step.
4. **4.** If the cause is not visually evident, verify the symptom and refer to the Jaguar approved diagnostic system.

Symptom Chart

CAUTION: When probing connectors to take measurements in the course of the pinpoint tests, use the adaptor kit, part number 3548-1358-00.

• NOTE: Check and rectify basic faults before beginning diagnostic routines involving pinpoint tests.

• NOTE: When performing electrical voltage or resistance tests, always use a digital multimeter (DMM) accurate to 3 decimal places, and with an up-to-date calibration certificate. When testing resistance, always take the resistance of the DMM leads into account.

Symptom (general)	Symptom (specific)	Possible source	Action
Erratic operation of brake shift interlock	Interlock function will not operate/release	• Brake shift interlock solenoid circuit failure • Brake shift interlock solenoid failure	GO to Pinpoint Test A.

Diagnostic Trouble Code (DTC) Index

Five Digit DTC	Component	Description	Condition	Action
P1780 (To VIN D15361)	D-4 switch malfunction	Switch or circuit malfunction	D-4 switch inoperative or out of range	GO to Pinpoint Test B.
P0915 (From VIN D15362)	J-Gate input	J-Gate or circuit malfunction	Left-hand side of the J-Gate inoperative	GO to Pinpoint Test C.

PINPOINT TEST A : J-GATE SYSTEM CIRCUIT CHECKS	
TEST CONDITIONS	**DETAILS/RESULTS/ACTIONS**
A1: CHECK IGNITION SUPPLY TO THE J-GATE.	
	1 Disconnect the J-Gate electrical connector, IP14.
	2 Turn the ignition switch to the **ON** position.
	3 Measure the voltage between IP14, pin 01 (WR) and GROUND.
	Is the voltage less than 10 Volts? **Yes** REPAIR the circuit between IP14 pin 01 (WR) and the ignition switch. For additional information, refer to the wiring diagrams. TEST the system for normal operation. **No** GO to A2.
A2: CHECK GROUND SUPPLY TO THE J-GATE.	
	1 Turn the ignition switch to the **OFF** position.
	2 Measure the resistance between IP14, pin 02 (B) and GROUND.
	Is the resistance greater than 5 ohms? **Yes** REPAIR the high resistance circuit. For additional information, refer to the wiring diagrams. TEST the system for normal operation. **No** CHECK for CAN DTCs. REFER to Section 418-00 Module Communications Network.

PINPOINT TEST B : P1780. D-4 SWITCH MALFUNCTION (TO VIN D15361)	
• NOTE: Incorrect adjustment of the selector cable could result in this DTC being set with no electrical fault being present. REFER to Selector Lever Cable Adjustment - in this section.	
TEST CONDITIONS	**DETAILS/RESULTS/ACTIONS**
B1: CHECK IGNITION SUPPLY TO THE J-GATE.	
	1 Disconnect the J-Gate electrical connector, IP14.
	2 Turn the ignition switch to the **ON** position.
	3 Measure the voltage between IP14, pin 01 (WR) and GROUND.

	Is the voltage less than 10 volts? **Yes** REPAIR the circuit between IP14, pin 01 (WR) and the ignition switch (this circuit includes the Central Junction fuse box, Ignition relay, and inertia switch). For additional information, refer to the wiring diagrams. CLEAR the DTC. TEST the system for normal operation. **No** GO to B2.
B2: CHECK GROUND SUPPLY TO THE J-GATE.	
	1 Turn the ignition switch to the **OFF** position.
	2 Measure the resistance between IP14, pin 02 (B) and GROUND.
	Is the resistance greater than 5 ohms? **Yes** REPAIR the high resistance circuit. For additional information, refer to the wiring diagrams. CLEAR the DTC. TEST the system for normal operation. **No** GO to B3.
B3: CHECK D-4 SWITCH SIGNAL WIRE FOR HIGH RESISTANCE.	
	1 Disconnect the TCM electrical connector, JB131.
	2 Measure the resistance between IP14, pin 05 (BW) and JB131, pin 45 (BW).
	Is the resistance greater than 5 ohms? **Yes** REPAIR the high resistance circuit. For additional information, refer to the wiring diagrams. CLEAR the DTC. TEST the system for normal operation. **No** INSTALL a new J-Gate. REFER to Transmission Selector Lever - in this section.

PINPOINT TEST C : P0915 J-GATE SIGNAL INPUTS TO THE TCM (FROM VIN D15362)

• NOTE: Incorrect adjustment of the selector cable could result in this DTC being set with no electrical fault being present.
REFER to Selector Lever Cable Adjustment - in this section.

TEST CONDITIONS	DETAILS/RESULTS/ACTIONS
C1: CHECK TRANSMISSION RANGE SENSOR CONTINUITY IN D.	
	1 Disconnect TR sensor electrical connector JB156.
	2 Select **D**.
	3 Check for continuity between JB156, pin 08 and pin 01 at the sensor.
	Is the circuit continuous? **Yes** GO to C2. **No** Carry out the adjustment procedure for the Transmission Range Sensor. REFER to Transmission Range (TR) Sensor Adjustment in this section. Recheck the circuit. If still open circuit, INSTALL a new Transmission Range Sensor. REFER to Transmission Range (TR) Sensor in this section. CLEAR the DTC. TEST the system for normal operation.
C2: CHECK TRANSMISSION RANGE SENSOR DRIVE SIGNAL WIRE FOR HIGH RESISTANCE.	
	1 Disconnect the TCM electrical connector, JB131.
	2 Measure the resistance between JB131, pin 27 (Y) and JB156, pin 01 (Y).
	Is the resistance greater than 5 ohms? **Yes** REPAIR the high resistance circuit. For additional information, refer to wiring diagrams. CLEAR the DTC. TEST the system for normal operation. **No** GO to C3.
C3: CHECK IGNITION SUPPLY TO THE J-GATE.	
	1 Disconnect the J-Gate electrical connector, IP14.
	2 Turn the ignition switch to the **ON** position.
	3 Measure the voltage between IP14, pin 01 (WR) and ground.
	Is the voltage less than 10 volts? **Yes** REPAIR the circuit between IP14, pin 01 (WR) and the ignition switch (this circuit includes the Central Junction fuse box, Ignition relay, and inertia switch). For additional information, refer to the wiring diagrams. CLEAR the DTC. TEST the system for normal operation. **No** GO to C4.
C4: CHECK GROUND SUPPLY TO THE J-GATE.	
	1 Turn the ignition switch to the **OFF** position.
	2 Measure the resistance between J-Gate electrical connector IP14, pin 02 (B) and GROUND.
	Is the resistance greater than 5 ohms? **Yes** REPAIR the high resistance circuit. For additional information, refer to the wiring diagrams. CLEAR the DTC. TEST the system for normal operation. **No** GO to C5.
C5: CHECK J-GATE SIGNAL INPUT WIRES FOR CONTINUITY (4 RANGE).	
	1 Disconnect the TCM electrical connector JB131.
	2 Measure the resistance between IP14 pin 05 (BW) and JB131 pin 45 (BW).
	Is the resistance greater than 5 ohms? **Yes** REPAIR the high resistance circuit. For additional information, refer to the wiring diagrams. CLEAR the DTC. TEST the system for normal operation. **No** GO to C6.
C6: CHECK THE J-GATE SIGNAL INPUT WIRES FOR CONTINUITY (3 RANGE).	
	1 Measure the resistance between IP14 pin 15 (O) and JB131 pin 07 (O).

	Is the resistance greater than 5 ohms? **Yes** REPAIR the high resistance circuit. For additional information, refer to the wiring diagrams. CLEAR the DTC. TEST the system for normal operation. **No** GO to C7.
C7: CHECK THE J-GATE SIGNAL INPUT WIRES FOR CONTINUITY (2 RANGE).	
	1 Measure the resistance between IP14 pin 14 (R) and JB131 pin 08 (R).
	Is the resistance greater than 5 ohms? **Yes** REPAIR the high resistance circuit. For additional information, refer to the wiring diagrams. CLEAR the DTC. TEST the system for normal operation. **No** GO to C8.
C8: J-GATE SIGNALS FUNCTIONALITY	
	1 If tests between C1 and C7 have been successfully completed and the fault is still present, INSTALL a new J-Gate.
	2 CLEAR the DTC.
	3 TEST the system for normal operation.
	Does the system function correctly? **Yes** No further action required. **No** Contact dealer technical support for advice on possible module.

Automatic Transmission / Transaxle External Controls - Vehicles With: 5-Speed Automatic Transaxle - JATCO - Selector Lever Cable Adjustment

General Procedures

Setting Procedure-All Vehicles

1. Apply the parking brake.
2. Apply the footbrake.
3. Turn the ignition switch to position II.
4. Move the gear selector lever to 'N'.

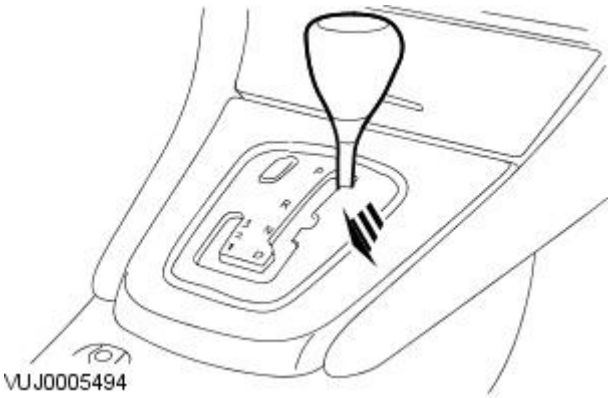

5. Raise and support the vehicle.
   For additional information, refer to Section 100-02 Jacking and Lifting.
6. Remove the gear selector cover plate.

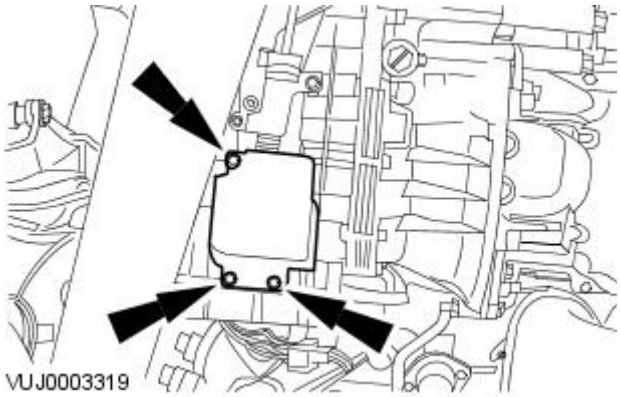

7. Loosen the gear selector cable retaining bolt.

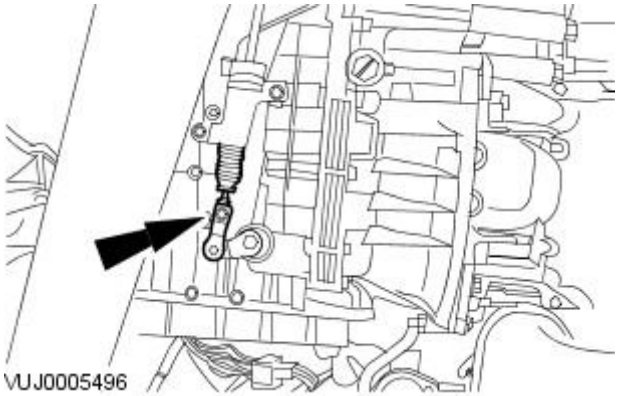

Vehicles Built up to VIN D15360

- NOTE: Before starting the 'J' gate setting procedure, make sure the vehicle is cold, or has been left to cool for at least two hours.

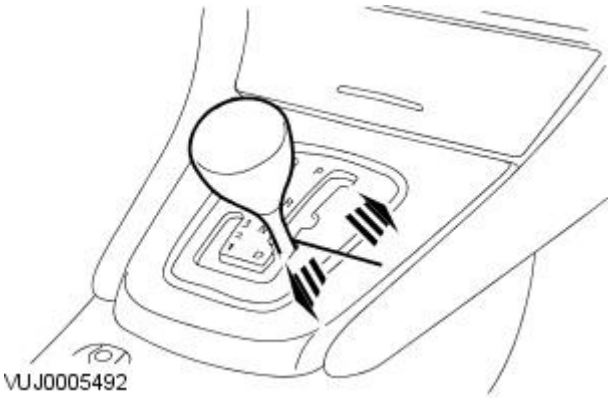

1. Using the corner of the grey feature line that follows the edge of the 'J' gate as a datum, use a rule and move the gear selector forwards or back two millimeters.

All Vehicles

• NOTE: Before starting the 'J' gate setting procedure, make sure the vehicle is cold, or has been left to cool for at least two hours.

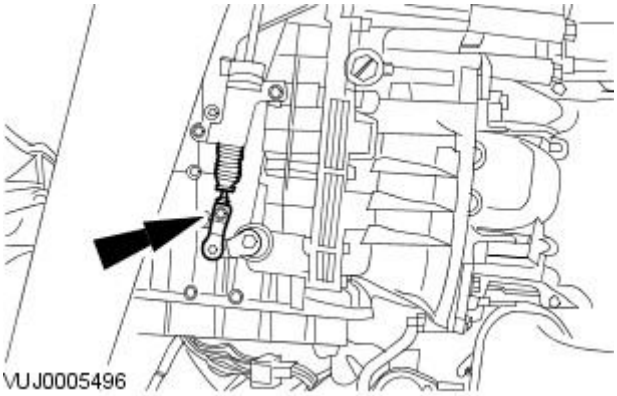

1. NOTE: Make sure the transmission is in neutral.

   Fully tighten the cable retaining bolt

   - Tighten to 5Nm.

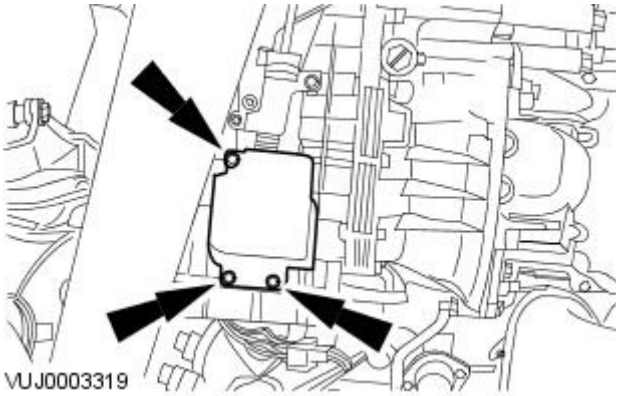

2. Install the gear selector cover plate.

   - Tighten to 10Nm.

3. Check for correct operation. If setting is incorrect, repeat the above steps until correct operation is achieved.

Automatic Transmission / Transaxle External Controls - Vehicles With: 5-Speed Automatic Transaxle - JATCO - Selector Lever Cable and Bracket

Removal and Installation

Removal

1. NOTE: To move the gear selector lever, the ignition must be in the RUN position, with the foot brake pressed.

Move the gear selector lever to "N" position.

2. Remove the center console right-hand side trim panel.

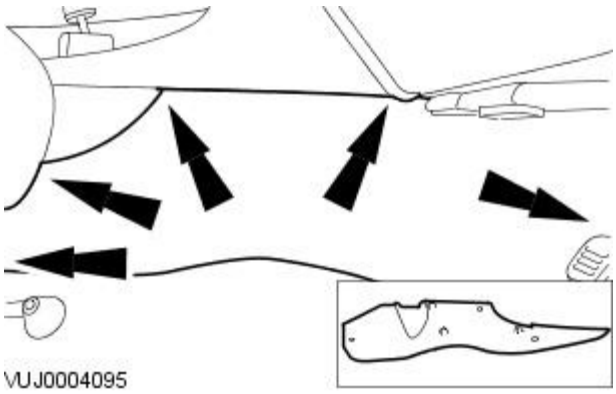

3. Release the gear selector cable locking pin.

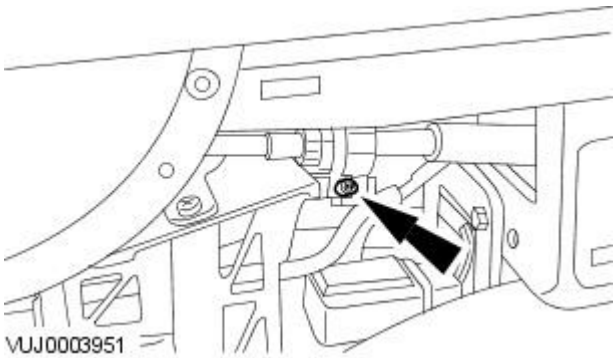

4. Remove the center console side retaining screw.

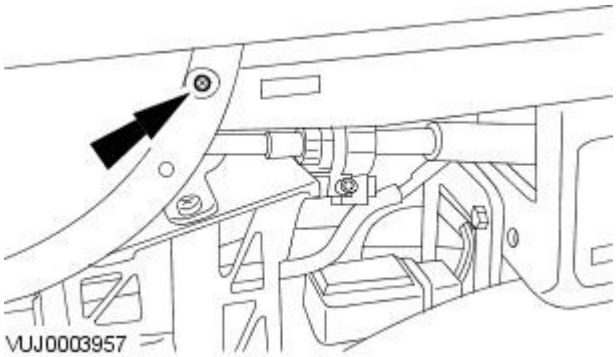

5. Detach the gear selector cable from the J-gate.

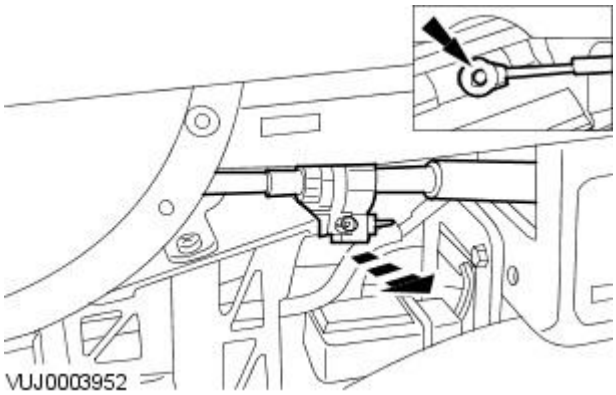

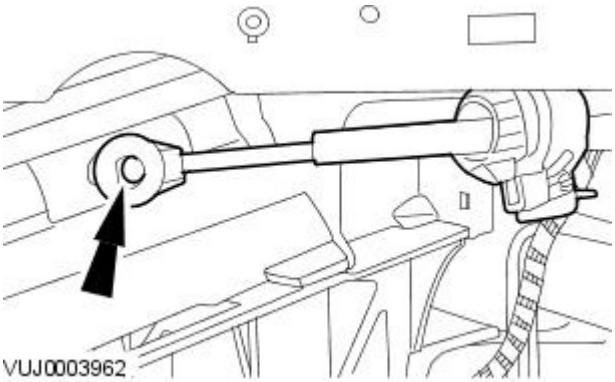

6. Disconnect the gear selector cable from the J-gate.

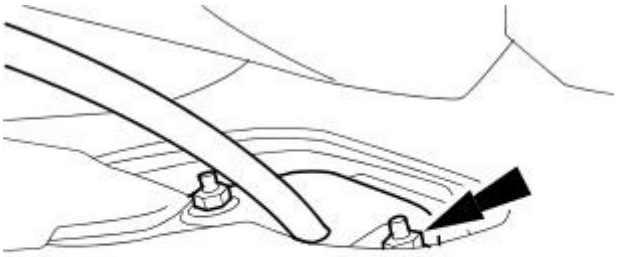

7. Detach the gear selector cable grommet.

8. Raise and support the vehicle. For additional information, refer to Section 100-02 Jacking and Lifting.

9. Detach the exhaust heat shield.

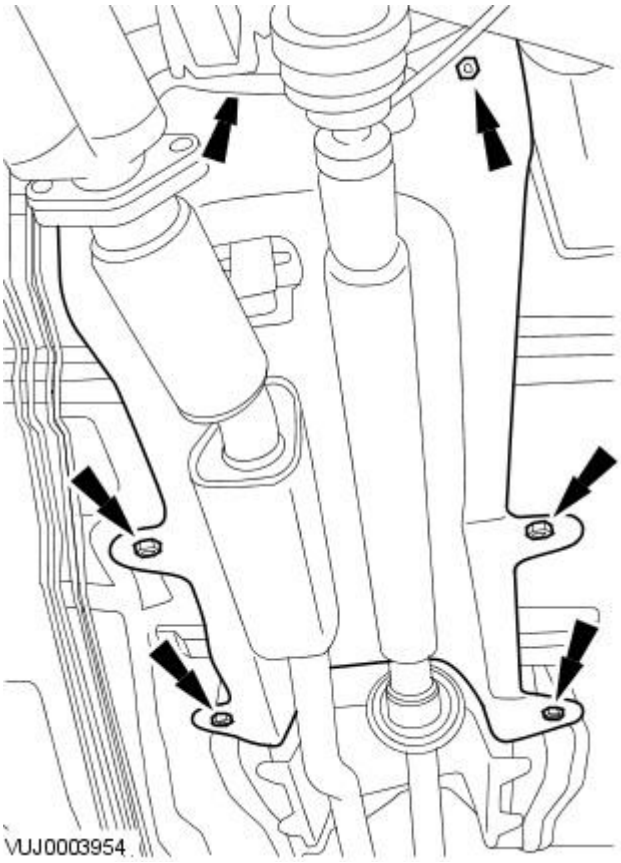

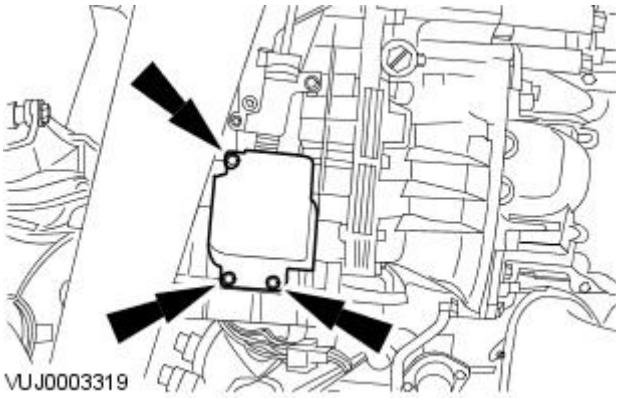

10. Remove the gear selector cable shield.

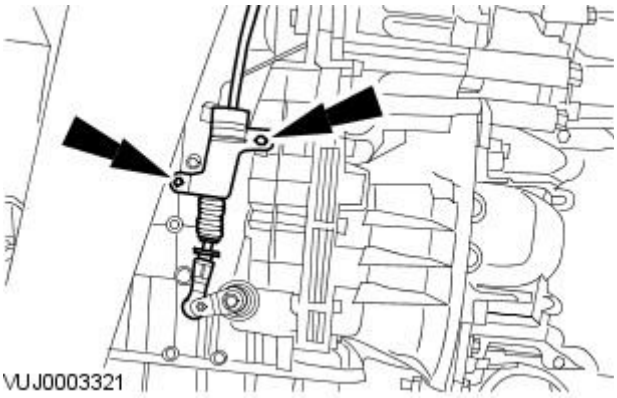

11. Detach the gear selector cable bracket.

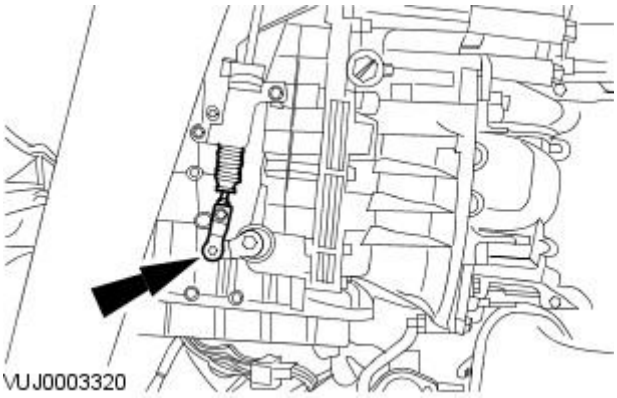

12. Disconnect the gear selector cable.

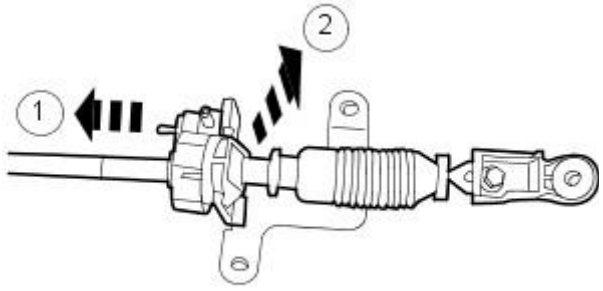

VUJ0003956

13. Remove the gear selector cable from the gearbox mounting bracket.

1. Pull out the locking pin.
2. Remove the gear selector cable from the gearbox mounting bracket.

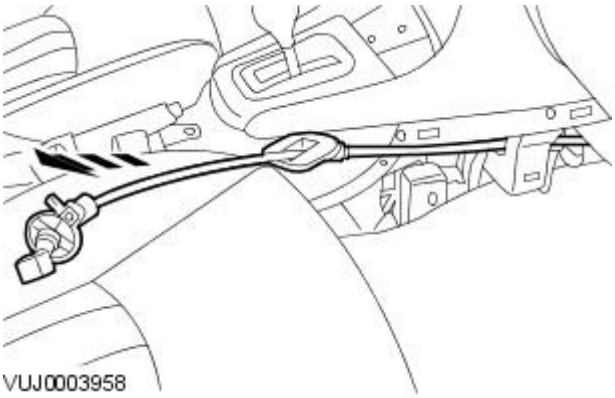

14. Lower the vehicle.

15. Remove the selector cable.

Installation

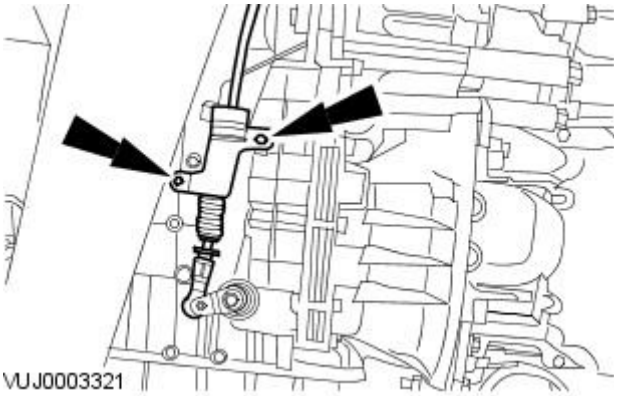

1. To install, reverse the removal procedure.

- Tighten to 10 Nm.

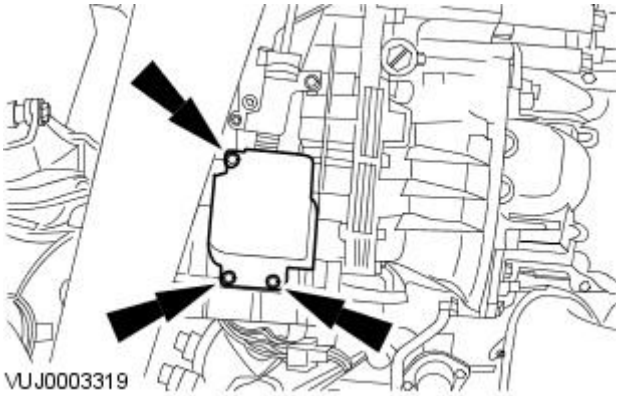

2. Tighten to 10 Nm.

Automatic Transmission / Transaxle External Controls - Vehicles With: 5-Speed Automatic Transaxle - JATCO - Selector Lever Assembly

Removal and Installation

Removal

1. NOTE: To move the selector lever, the ignition must be in the RUN position, with the foot brake pressed.

Move the selector lever to the 'N' position.

2. Remove the floor console.
For additional information, refer to: Floor Console (501-12 Instrument Panel and Console, Removal and Installation).

3. Disconnect the electrical connector.

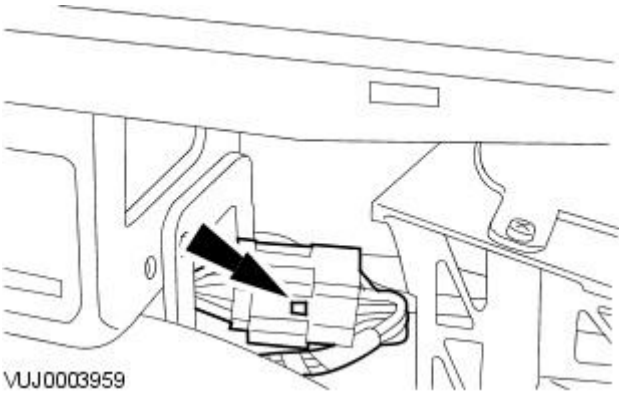

4. NOTE: The floor console bracket cannot be removed at this stage.

Remove the floor console bracket retaining screws.

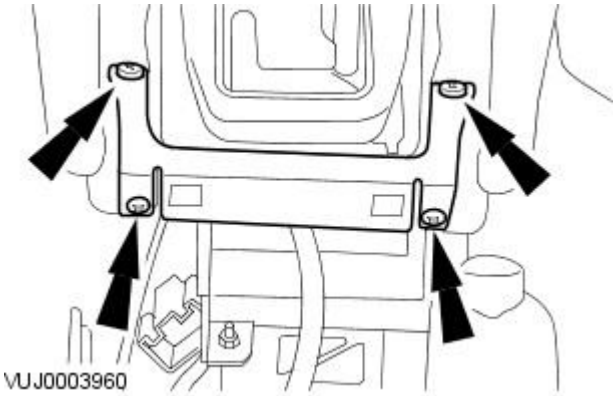

5. Release the selector lever cable locking pin.

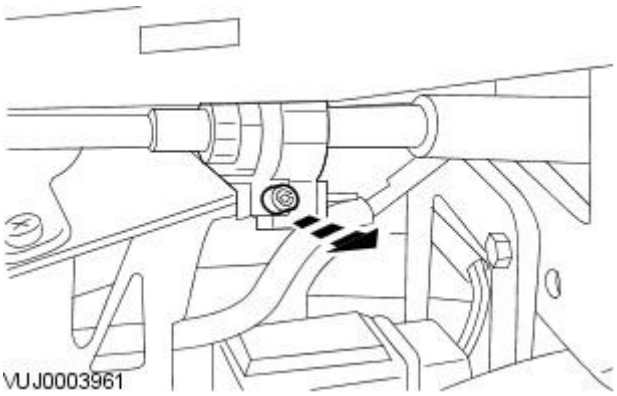

6. Disconnect the selector lever cable from the selector lever.

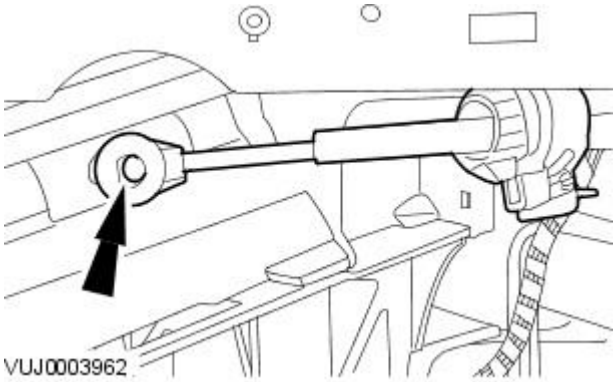

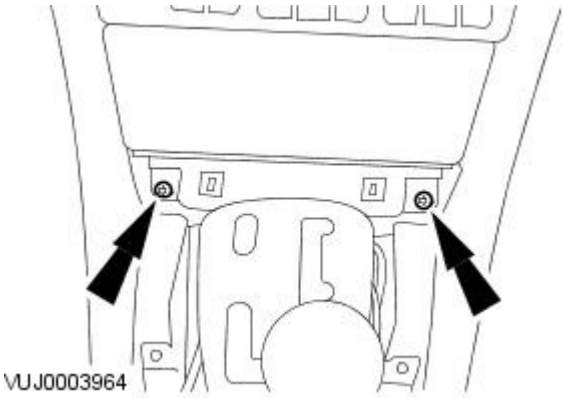

7. Remove the ashtray retaining screws.

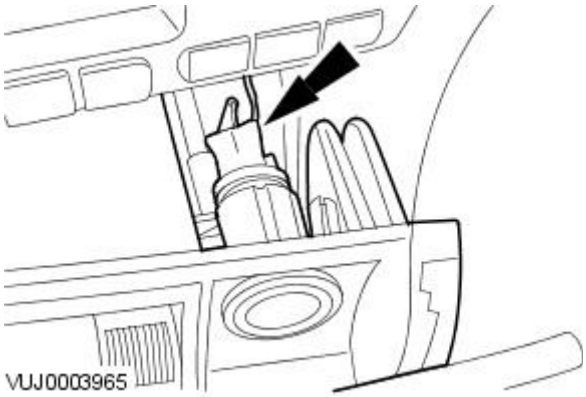

8. Remove the ashtray.

- Disconnect the cigar lighter electrical connector.

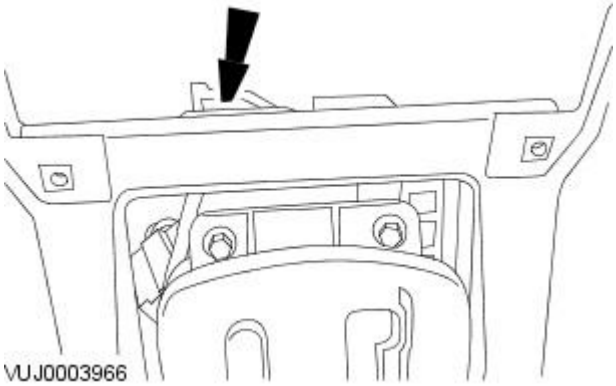

9. Remove the selector lever retaining screw.

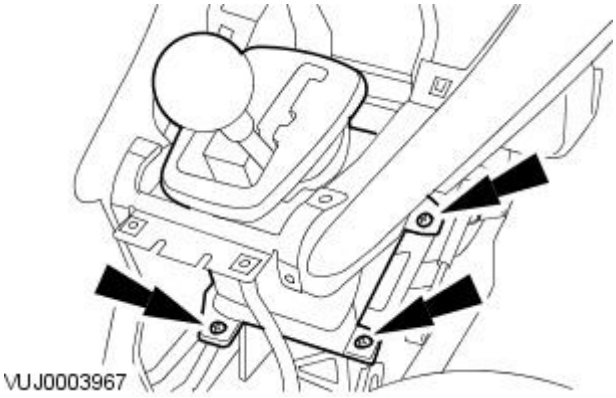

10. Remove the selector lever.

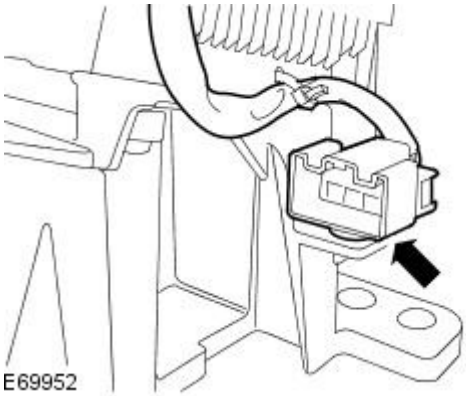

11. Detach the electrical connector from the selector lever.

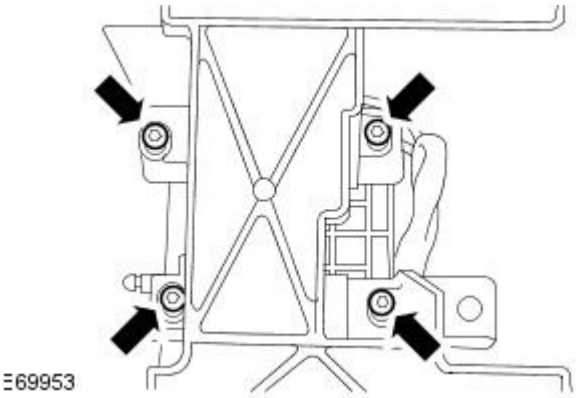

12. Remove the selector lever from the selector lever bracket.

- Remove the selector lever retaining screws.

Installation

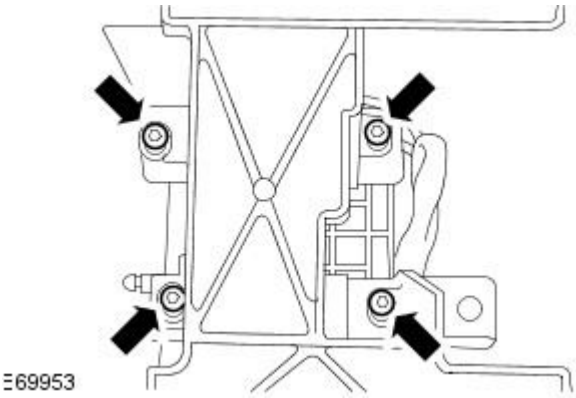

1. NOTE: Do not fully tighten the selector lever retaining screws at this stage.

Install the new selector lever to the selector lever bracket.

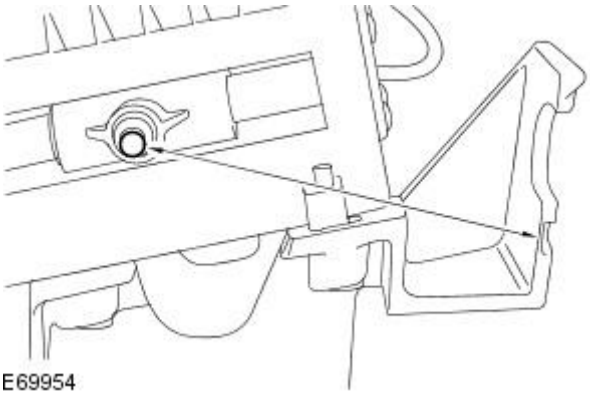

2. NOTE: The new selector lever is supplied with a setting tool installed, to hold the selector lever in the correct position for adjustment to be carried out.

• NOTE: The setting tool must remain installed, until the selector lever cable adjustment has been carried out.

Set the distance between the selector lever pin and the selector lever bracket.

- Adjust the the distance to 97.5 mm (3.84 inches).

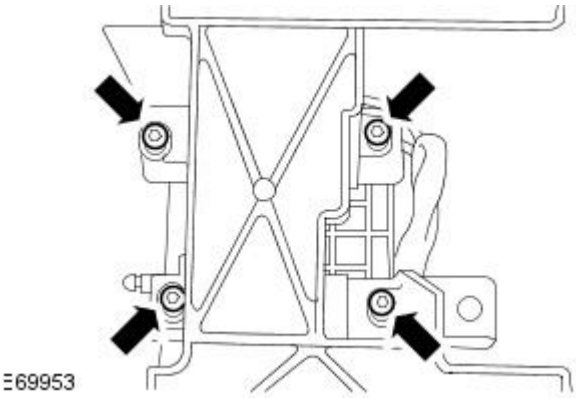

3. Tighten the selector retaining screws.

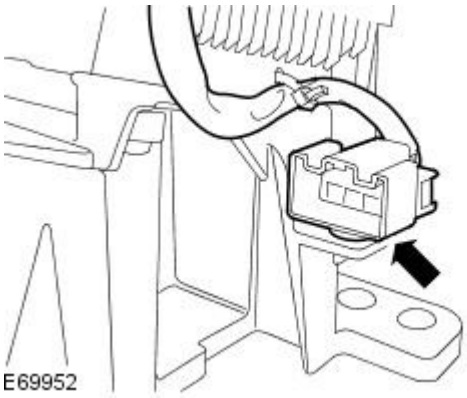

4. Attach the electrical connector to the selector lever.

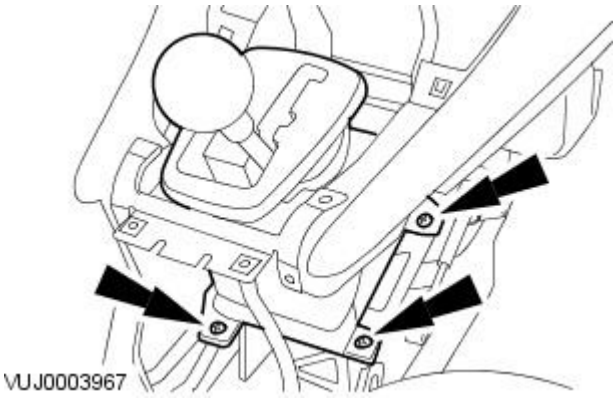

5. Install the selector lever.

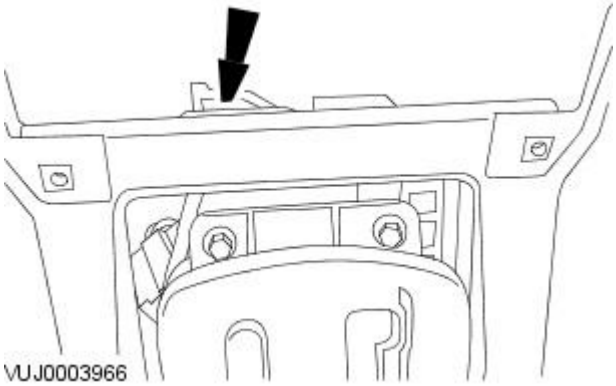

6. Install the selector lever retaining screw.

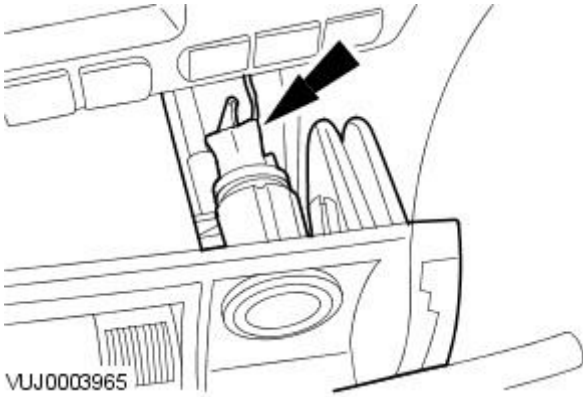

7. Install the ashtray.

- Connect the cigar lighter electrical connector.

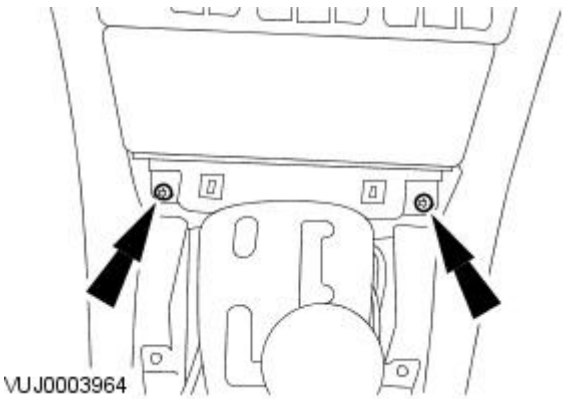

8. Install the ashtray retaining screws.

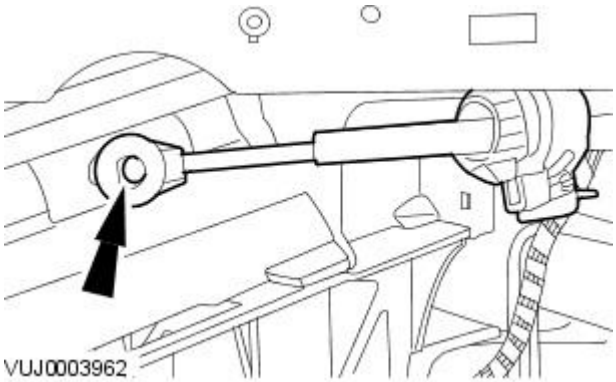

9. Connect the selector lever cable to the selector lever.

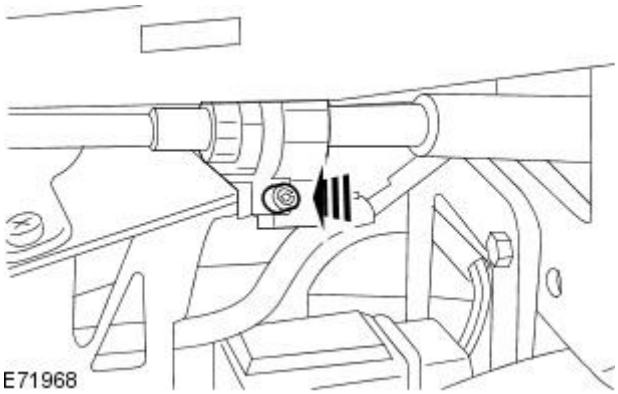

10. Install the selector lever cable locking pin.

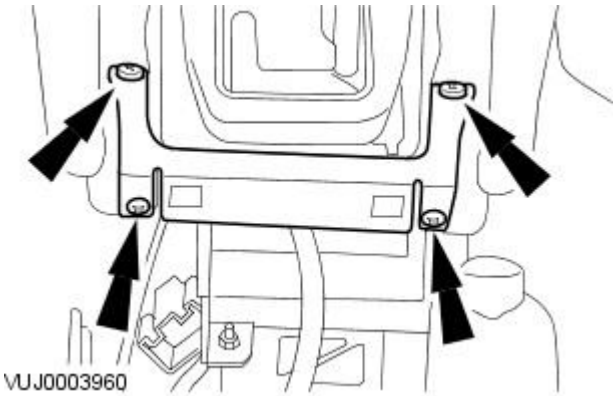

11. Install the floor console bracket retaining screws.

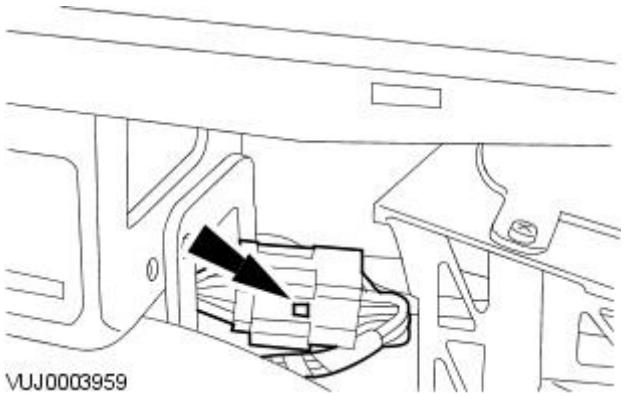

12. Connect the selector lever electrical connector.

13. Set the selector lever cable adjustment.
For additional information, refer to: Selector Lever Cable Adjustment (307-05B Automatic Transmission/Transaxle External Controls - Vehicles With: 6-Speed Automatic Transaxle - AWF21, General Procedures).

14. Remove the selector lever setting tool.

15. Install the floor console.
For additional information, refer to: Floor Console (501-12 Instrument Panel and Console, Removal and Installation).

16. Move the selector lever to the 'P' position.

Published: 11-May-2011

Automatic Transmission / Transaxle External Controls - Vehicles With: 6-Speed Automatic Transaxle - AWF21 -

Torque Specifications

Description	Nm	lb-ft	lb-in
Selector cable shield	10	7	-
Selector cable retaining bracket	10	7	-

Automatic Transmission / Transaxle External Controls - Vehicles With: 6-Speed Automatic Transaxle - AWF21 - External ControlsVehicles With: 6-Speed Automatic Transaxle - AWF21

Description and Operation

COMPONENT LOCATION - AW F21 6 SPEED AUTOMATIC TRANSMISSION FROM 2009MY

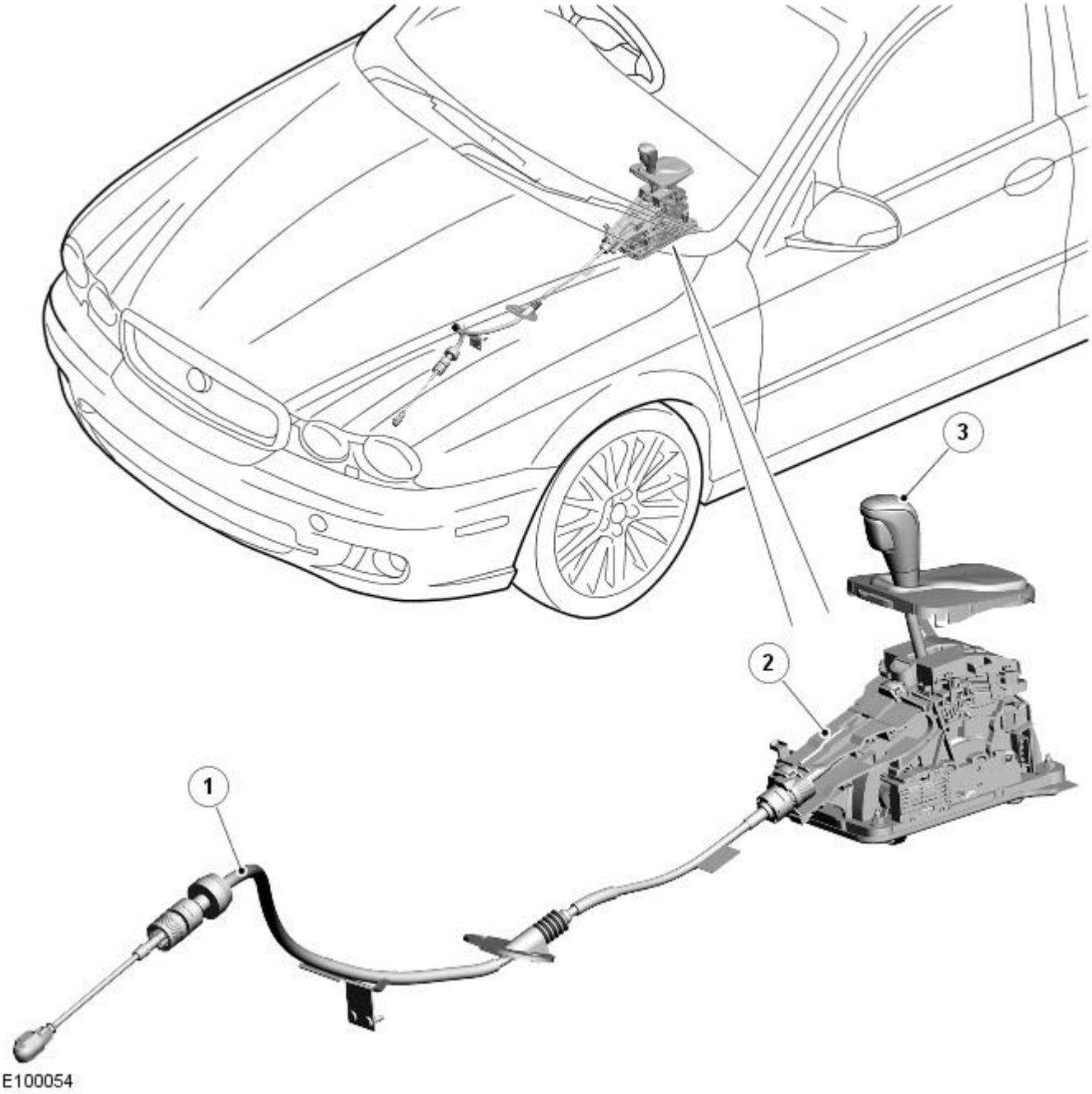

Item	Part Number	Description
1	-	Selector cable
2	-	Selector lever assembly
3	-	Selector knob, gaiter and illumination module

OVERVIEW

The automatic transmission external controls comprise a selector lever assembly and a transmission cable. The selector lever allows the driver to select forward or reverse gears and also to engage sport or manual 'Jaguar Sequential Shift' modes.

Movement of the selector lever is confirmed to the driver by illumination of the applicable position LED (light emitting diode) on the illumination module and by a message displayed in the instrument cluster message center.

• NOTE: PRND is not displayed in the message center. When in sport mode 'S' is displayed and when in Jaguar Sequential Shift mode the selected gear (1, 2, 3, 4, 5, or 6) is displayed.

SELECTOR LEVER

• NOTE: RHD (right-hand drive) version shown

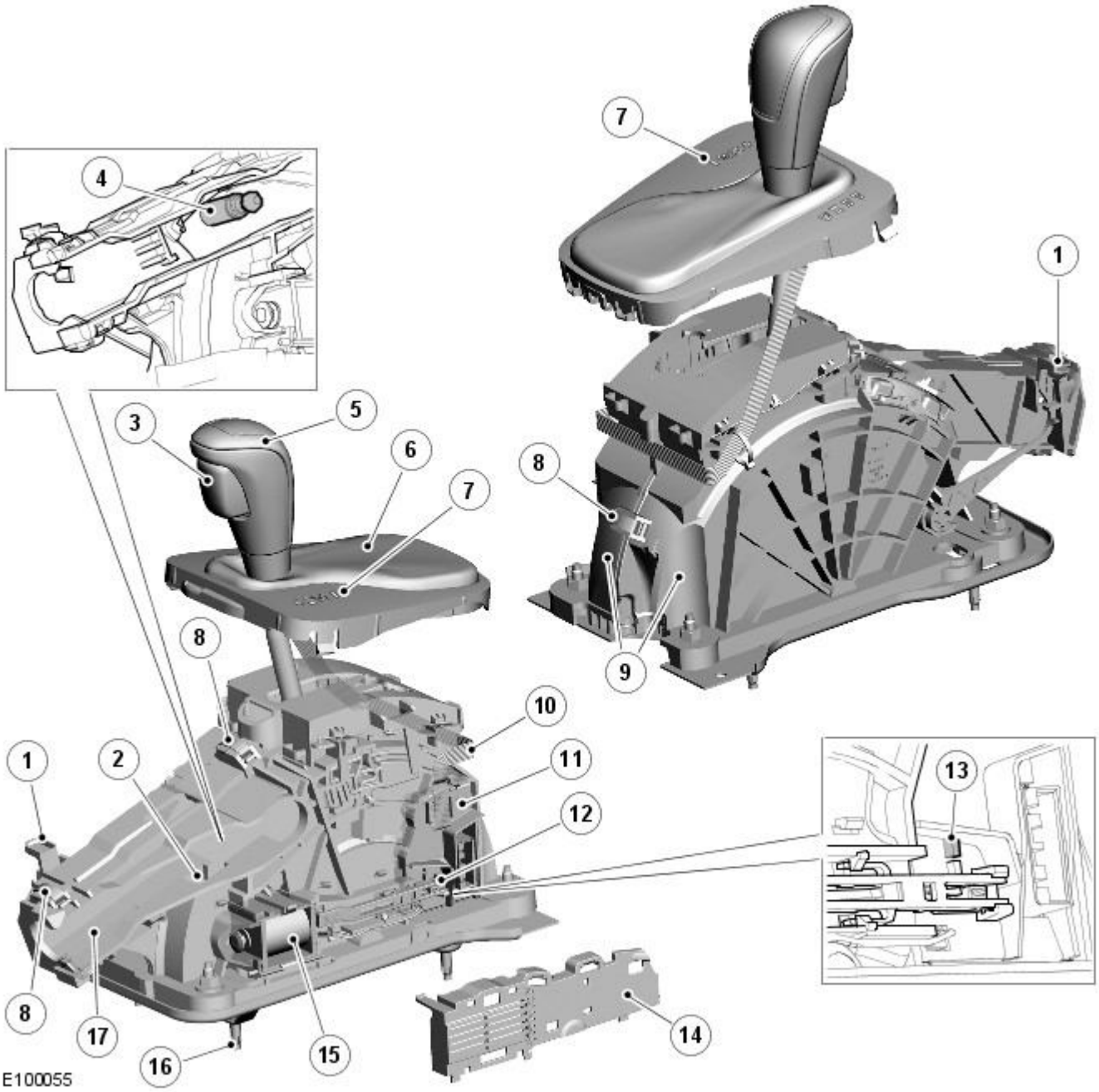

Item	Part Number	Description
1	-	Interlock solenoid - Emergency release lever
2	-	Cable adjustment/setting aperture
3	-	Selector lever button
4	-	Cable attachment ball pin
5	-	Knob
6	-	Gaiter
7	-	Selector position LED's
8	-	Spring clip
9	-	Shift housing Left Hand (LH) and Right Hand (RH)
10	-	Printed Circuit Board (PCB) ribbon cable and connector
11	-	Gear shift module
12	-	Sensor arm
13	-	Optical sensor alignment mark
14	-	Cover
15	-	Shift interlock solenoid
16	-	Mounting bolt (4 off)
17	-	Cable abutment aperture

The selector lever assembly is located in a central position on the transmission tunnel, between the front driver and passenger seats and is secured to the transmission tunnel with 4 bolts. The selector lever assembly is an electro-mechanical assembly which is used by the driver to select the required transmission mode. Serviceable parts comprise the shifter mounting plate, the knob, the PRND LED display, gaiter and illumination module assembly and the base shifter. If other selector components require replacement then a complete shifter assembly will need to be fitted.

Selections made using the selector lever are passed to the transmission lever arm by a cable. A ball pin is attached to the lever mechanism and provides for the attachment of the cable.

There are 5 selector lever positions and 2 additional positions for manual 'Jaguar Sequential Shift' operation:

- P (Park) - Prevents the vehicle from moving by locking the transmission
- R (Reverse) - Select only when the vehicle is stationary and the engine is at idle
- N (Neutral) - No torque transmitted to drive wheels
- D (Drive) - Select only when the vehicle is stationary and the engine speed is at idle. Allows the transmission to automatically select the most appropriate of the 6 forward gears

- M/S (Manual/Sport Mode) - Initial selection of this position activates the transmission 'Sport' mode. This position has the same function as 'D' but forces the transmission to upshift at higher engine speeds to improve acceleration
- + and - (Manual 'Jaguar Sequential Shift' mode) - Movement of the selector lever in the +/- positions, when the lever is in the M/S position, will operate the transmission in manual (Jaguar Sequential Shift) mode allowing the driver to manually select all 6 forward gears.
  - To change back to Sport mode once Manual 'Jaguar Sequential Shift' mode has been engaged, the selector lever must first be moved to the 'D' position and then returned to the M/S position.

The selector lever position is shown on the PRND LED display on the selector illumination module. The illumination of the LED's is controlled by CAN (controller area network) messages from the instrument cluster.

The selector lever position when in 'Sport' or 'Jaguar Sequential Shift' mode is displayed to the driver on the selector position LED and in the instrument cluster. PRND positions are not displayed. In 'Jaguar Sequential Shift' mode, if a gear is selected but the TCM (transmission control module) logic prevents selection of that gear, the requested gear will be initially displayed. The TCM will engage the next allowed gear and then display that gear. In 'Jaguar Sequential Shift' when a gear is selected it will only be displayed in the instrument cluster message center.

Gear Shift Module

A gear shift module is located on the LH (left-hand) side of the selector lever. The gear shift module is an intelligent unit and controls the selector position LED operation and also the shift interlock solenoid operation. The module comprises a Printed Circuit Board (PCB) and Hall sensors which detect the selected position of the selector lever, when in M/S and + and - positions, via a magnet located on the lever mechanism. The signals from the Hall sensors are passed from a connector on the gear shift module to the TCM on a LIN (local interconnect network).

The gear shift module main connector uses 4 pins for LIN bus, ground, power and neutral inputs and outputs. A second connector allows for the connection of a ribbon cable from the selector position LED for background illumination and position illumination. A third connector supplies power and ground connections to the shift interlock solenoid.

Shift Interlock

The shift interlock solenoid is located on the LH side of the selector lever assembly. The solenoid operates a locking lever which engages with the lever mechanism and locks it in the Park (P) and Neutral (N) positions. When the ignition is in power mode 6 or the engine is running, the solenoid is de-energised and prevents the lever from moving from these positions until the brake pedal is pressed.

The neutral interlock feature only operates after a period of approximately 3 seconds. This allows the driver to move the selector lever between gears ('D' to 'R') without the need to operate the brake pedal.

• NOTE: The selector lever cannot be moved from the 'Park' position if the ignition is off.

If a fault occurs with the shift interlock solenoid, the sensor module or the brake switch, an emergency release lever is provided to disconnect the interlock mechanism. The emergency release lever can be accessed by removal of the RH (right-hand) carpet panel from the floor console. The panel can be removed to gain access to the release lever which is located at the front of the selector lever assembly and is colored yellow for identification.

TRANSMISSION CABLE

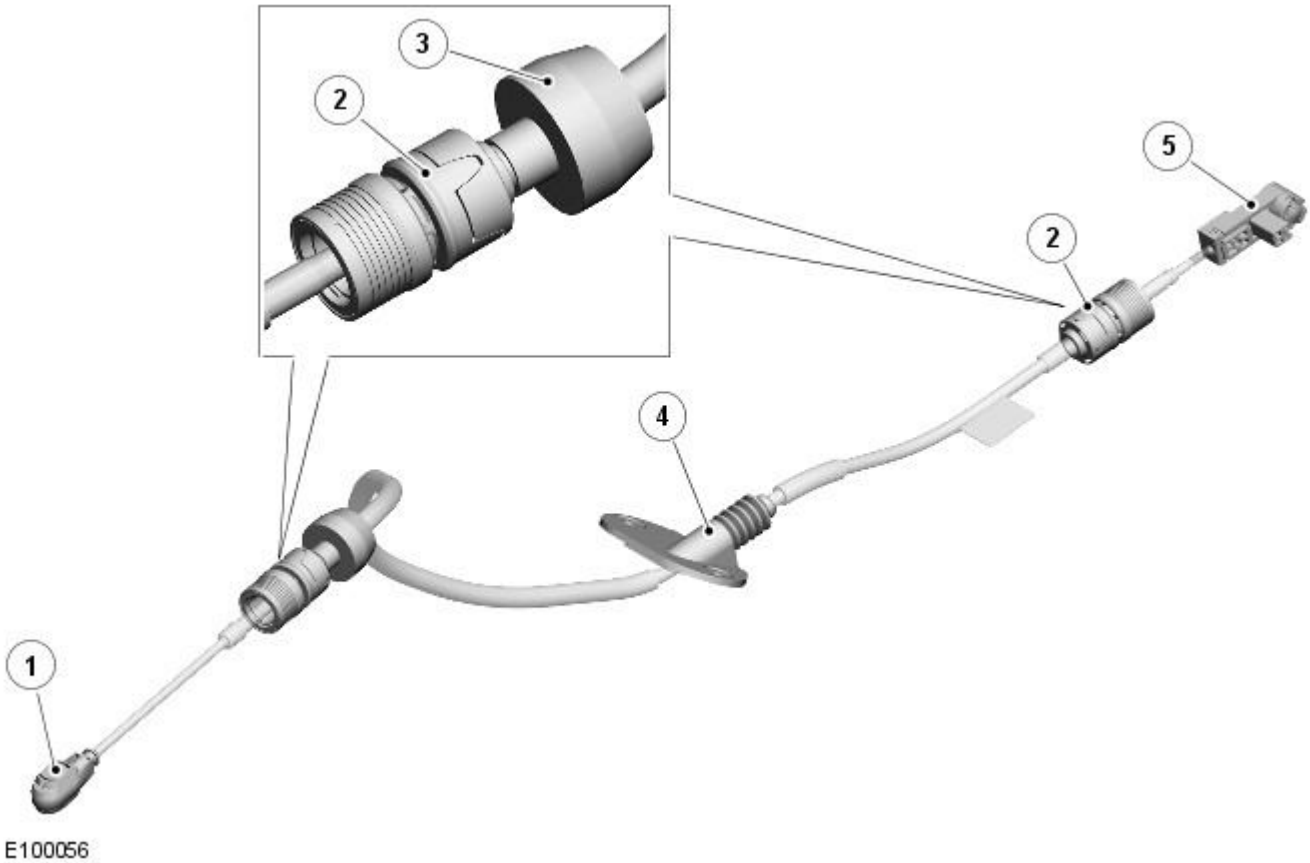

Item	Part Number	Description
1	-	Transmission eye end
2	-	Abutment
3	-	Damper weight
4	-	Bulkhead grommet
5	-	Selector lever arm eye end and adjuster

The transmission cable assembly is a one-piece, push/pull cable connected between the transmission and the selector lever.

The selector lever end of the cable has an adjustable eye end which locates on a ball pin on the selector lever. An abutment on the cable outer sheath locates in an aperture in the selector lever shift housing. The transmission end of the cable also has an eye end which locates on a ball pin on the end of the transmission lever arm. An abutment on the outer sheath locates in a bracket attached to the top of the transmission. A damper weight is attached to the cable outer sheath to reduce noise and vibration being transmitted to the selector lever.

The purpose of the manual adjuster on the selector lever arm eye end is to accommodate vehicle to vehicle build tolerances. This ensures that the selector lever movements are correctly aligned with the movements of the transmission selector lever. This is essential to ensure the correct function of the selector mechanism.

Automatic Transmission / Transaxle External Controls - Vehicles With: 6-Speed Automatic Transaxle - AWF21 - External Controls

Diagnosis and Testing

Inspection and Verification

1. **1.** Verify the customer concern.
2. **2.** Visually inspect for obvious signs of mechanical or electrical damage.

WARNING: Danger of accident. Apply the parking brake. Shift the gear selector to **P**. Failure to follow these instructions may result in personal injury.

Visual Inspection Chart

Mechanical	Electrical
• Visibly damaged or worn parts • Gear selector interlock solenoid • Brake pedal switch	• Fuse(s) • Wiring harness for damage or corrosion • Electrical connector(s)

3. **3.** If an obvious cause for an observed or reported concern is found, correct the cause (if possible) before proceeding to the next step.
4. **4.** If the cause is not visually evident, verify the symptom and refer to the Jaguar approved diagnostic system.

Symptom Chart

CAUTION: When probing connectors to take measurements in the course of the pinpoint tests, use the adaptor kit, part number 3548-1358-00.

• NOTE: Check and rectify basic faults before beginning diagnostic routines involving pinpoint tests.

• NOTE: When performing electrical voltage or resistance tests, always use a digital multimeter (DMM) accurate to 3 decimal places, and with an up-to-date calibration certificate. When testing resistance, always take the resistance of the DMM leads into account.

Symptom (general)	Symptom (specific)	Possible source	Action
Erratic operation of brake shift interlock	Interlock function will not operate/release	• Brake shift interlock solenoid circuit failure • Brake shift interlock solenoid failure	GO to Pinpoint Test A.

Diagnostic Trouble Code (DTC) Index

Five Digit DTC	Component	Description	Condition	Action
P1780 (To VIN D15361)	D-4 switch malfunction	Switch or circuit malfunction	D-4 switch inoperative or out of range	GO to Pinpoint Test B.
P0915 (From VIN D15362)	J-Gate input	J-Gate or circuit malfunction	Left-hand side of the J-Gate inoperative	GO to Pinpoint Test C.

PINPOINT TEST A : J-GATE SYSTEM CIRCUIT CHECKS	
TEST CONDITIONS	**DETAILS/RESULTS/ACTIONS**
A1: CHECK IGNITION SUPPLY TO THE J-GATE.	
	1 Disconnect the J-Gate electrical connector, IP14.
	2 Turn the ignition switch to the **ON** position.
	3 Measure the voltage between IP14, pin 01 (WR) and GROUND.
	Is the voltage less than 10 Volts? **Yes** REPAIR the circuit between IP14 pin 01 (WR) and the ignition switch. For additional information, refer to the wiring diagrams. TEST the system for normal operation. **No** GO to A2.
A2: CHECK GROUND SUPPLY TO THE J-GATE.	
	1 Turn the ignition switch to the **OFF** position.
	2 Measure the resistance between IP14, pin 02 (B) and GROUND.
	Is the resistance greater than 5 ohms? **Yes** REPAIR the high resistance circuit. For additional information, refer to the wiring diagrams. TEST the system for normal operation. **No** CHECK for CAN DTCs. REFER to Section 418-00 Module Communications Network.

PINPOINT TEST B : P1780. D-4 SWITCH MALFUNCTION (TO VIN D15361)	
• NOTE: Incorrect adjustment of the selector cable could result in this DTC being set with no electrical fault being present. REFER to Selector Lever Cable Adjustment - in this section.	
TEST CONDITIONS	**DETAILS/RESULTS/ACTIONS**
B1: CHECK IGNITION SUPPLY TO THE J-GATE.	
	1 Disconnect the J-Gate electrical connector, IP14.
	2 Turn the ignition switch to the **ON** position.
	3 Measure the voltage between IP14, pin 01 (WR) and GROUND.

	Is the voltage less than 10 volts? **Yes** REPAIR the circuit between IP14, pin 01 (WR) and the ignition switch (this circuit includes the Central Junction fuse box, Ignition relay, and inertia switch). For additional information, refer to the wiring diagrams. CLEAR the DTC. TEST the system for normal operation. **No** GO to B2.
B2: CHECK GROUND SUPPLY TO THE J-GATE.	
	1 Turn the ignition switch to the **OFF** position.
	2 Measure the resistance between IP14, pin 02 (B) and GROUND.
	Is the resistance greater than 5 ohms? **Yes** REPAIR the high resistance circuit. For additional information, refer to the wiring diagrams. CLEAR the DTC. TEST the system for normal operation. **No** GO to B3.
B3: CHECK D-4 SWITCH SIGNAL WIRE FOR HIGH RESISTANCE.	
	1 Disconnect the TCM electrical connector, JB131.
	2 Measure the resistance between IP14, pin 05 (BW) and JB131, pin 45 (BW).
	Is the resistance greater than 5 ohms? **Yes** REPAIR the high resistance circuit. For additional information, refer to the wiring diagrams. CLEAR the DTC. TEST the system for normal operation. **No** INSTALL a new J-Gate. REFER to Transmission Selector Lever - in this section.

PINPOINT TEST C : P0915 J-GATE SIGNAL INPUTS TO THE TCM (FROM VIN D15362)

• NOTE: Incorrect adjustment of the selector cable could result in this DTC being set with no electrical fault being present.
REFER to Selector Lever Cable Adjustment - in this section.

TEST CONDITIONS	DETAILS/RESULTS/ACTIONS
C1: CHECK TRANSMISSION RANGE SENSOR CONTINUITY IN D.	
	1 Disconnect TR sensor electrical connector JB156.
	2 Select **D**.
	3 Check for continuity between JB156, pin 08 and pin 01 at the sensor.
	Is the circuit continuous? **Yes** GO to C2. **No** Carry out the adjustment procedure for the Transmission Range Sensor. REFER to Transmission Range (TR) Sensor Adjustment in this section. Recheck the circuit. If still open circuit, INSTALL a new Transmission Range Sensor. REFER to Transmission Range (TR) Sensor in this section. CLEAR the DTC. TEST the system for normal operation.
C2: CHECK TRANSMISSION RANGE SENSOR DRIVE SIGNAL WIRE FOR HIGH RESISTANCE.	
	1 Disconnect the TCM electrical connector, JB131.
	2 Measure the resistance between JB131, pin 27 (Y) and JB156, pin 01 (Y).
	Is the resistance greater than 5 ohms? **Yes** REPAIR the high resistance circuit. For additional information, refer to wiring diagrams. CLEAR the DTC. TEST the system for normal operation. **No** GO to C3.
C3: CHECK IGNITION SUPPLY TO THE J-GATE.	
	1 Disconnect the J-Gate electrical connector, IP14.
	2 Turn the ignition switch to the **ON** position.
	3 Measure the voltage between IP14, pin 01 (WR) and ground.
	Is the voltage less than 10 volts? **Yes** REPAIR the circuit between IP14, pin 01 (WR) and the ignition switch (this circuit includes the Central Junction fuse box, Ignition relay, and inertia switch). For additional information, refer to the wiring diagrams. CLEAR the DTC. TEST the system for normal operation. **No** GO to C4.
C4: CHECK GROUND SUPPLY TO THE J-GATE.	
	1 Turn the ignition switch to the **OFF** position.
	2 Measure the resistance between J-Gate electrical connector IP14, pin 02 (B) and GROUND.
	Is the resistance greater than 5 ohms? **Yes** REPAIR the high resistance circuit. For additional information, refer to the wiring diagrams. CLEAR the DTC. TEST the system for normal operation. **No** GO to C5.
C5: CHECK J-GATE SIGNAL INPUT WIRES FOR CONTINUITY (4 RANGE).	
	1 Disconnect the TCM electrical connector JB131.
	2 Measure the resistance between IP14 pin 05 (BW) and JB131 pin 45 (BW).
	Is the resistance greater than 5 ohms? **Yes** REPAIR the high resistance circuit. For additional information, refer to the wiring diagrams. CLEAR the DTC. TEST the system for normal operation. **No** GO to C6.
C6: CHECK THE J-GATE SIGNAL INPUT WIRES FOR CONTINUITY (3 RANGE).	
	1 Measure the resistance between IP14 pin 15 (O) and JB131 pin 07 (O).

	Is the resistance greater than 5 ohms? **Yes** REPAIR the high resistance circuit. For additional information, refer to the wiring diagrams. CLEAR the DTC. TEST the system for normal operation. **No** GO to C7.
C7: CHECK THE J-GATE SIGNAL INPUT WIRES FOR CONTINUITY (2 RANGE).	
	1 Measure the resistance between IP14 pin 14 (R) and JB131 pin 08 (R).
	Is the resistance greater than 5 ohms? **Yes** REPAIR the high resistance circuit. For additional information, refer to the wiring diagrams. CLEAR the DTC. TEST the system for normal operation. **No** GO to C8.
C8: J-GATE SIGNALS FUNCTIONALITY	
	1 If tests between C1 and C7 have been successfully completed and the fault is still present, INSTALL a new J-Gate.
	2 CLEAR the DTC.
	3 TEST the system for normal operation.
	Does the system function correctly? **Yes** No further action required. **No** Contact dealer technical support for advice on possible module.

Automatic Transmission / Transaxle External Controls - Vehicles With: 6-Speed Automatic Transaxle - AWF21 - Selector Lever Cable Adjustment

General Procedures

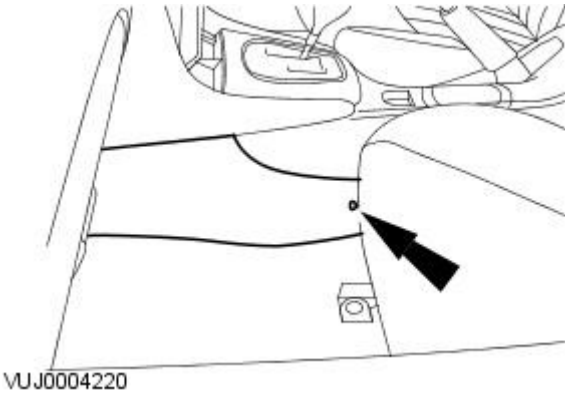

1. Check the operation of the transmission selector lever.

2. Remove the center console LH side finisher trim panel.

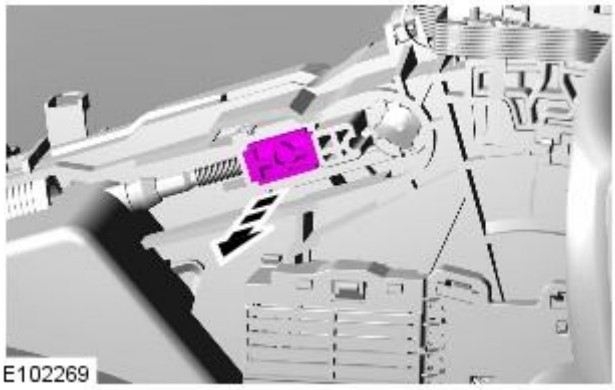

3. CAUTION: Make sure that the selector lever and the gearshift mechanism are in the park (P) position.

Release the transmission selector cable adjuster.

4. Remove the battery tray.
For additional information, refer to: Battery Tray (414-01 Battery, Mounting and Cables, Removal and Installation).

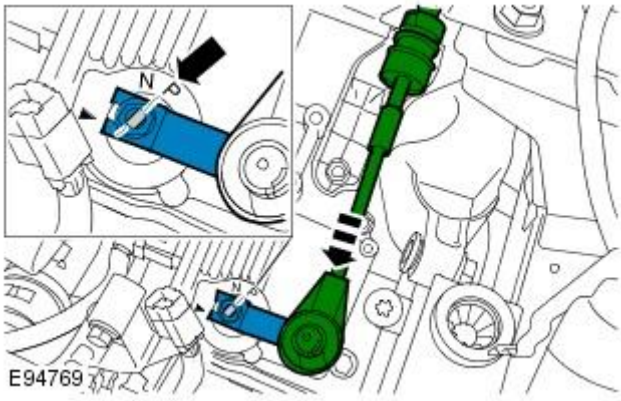

5. CAUTION: Make sure that the selector lever and the gearshift mechanism are in the park (P) position.

Adjust the transmission selector cable.

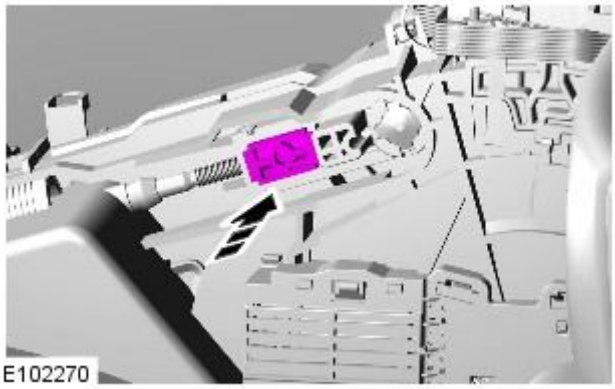

6. Lock the transmission selector cable adjuster.

7. Install the battery tray.
For additional information, refer to: Battery Tray (414-01 Battery, Mounting and Cables, Removal and Installation).

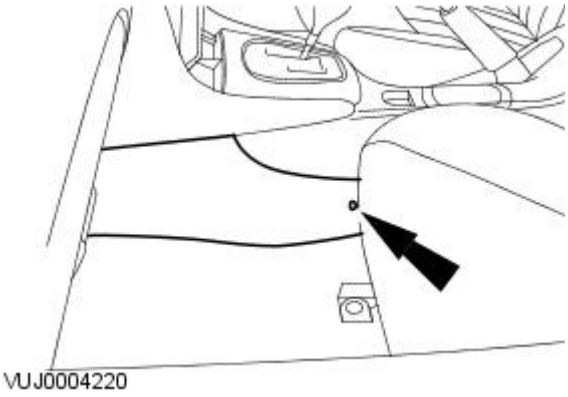

8. Install the center console LH side finisher trim panel.

Automatic Transmission / Transaxle External Controls - Vehicles With: 6-Speed Automatic Transaxle - AWF21 - Selector Lever Assembly

Removal and Installation

Removal

1. Remove the floor console.
   For additional information, refer to: Floor Console (501-12 Instrument Panel and Console, Removal and Installation).
2. Remove the floor console reinforcement bracket.
   - Remove the 4 Torx bolts.

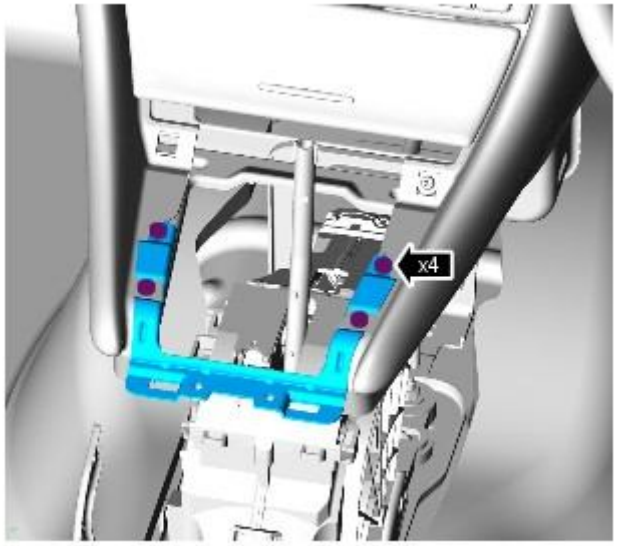

E101768

3. Disconnect the selector lever assembly electrical connector.

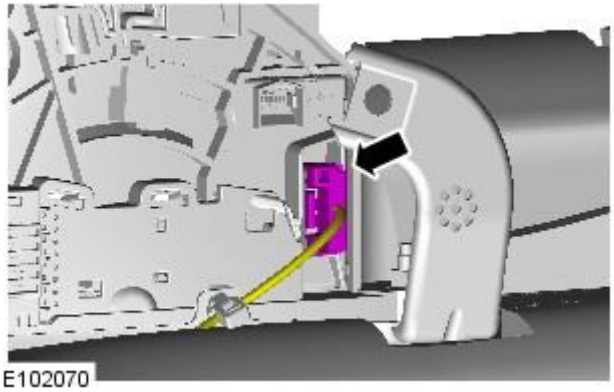

E102070

4. Release the transmission selector cable.
   - Release from the selector lever assembly.

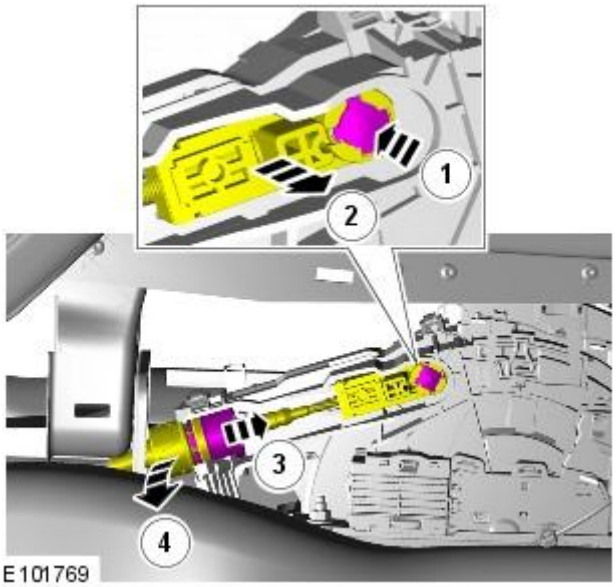

E101769

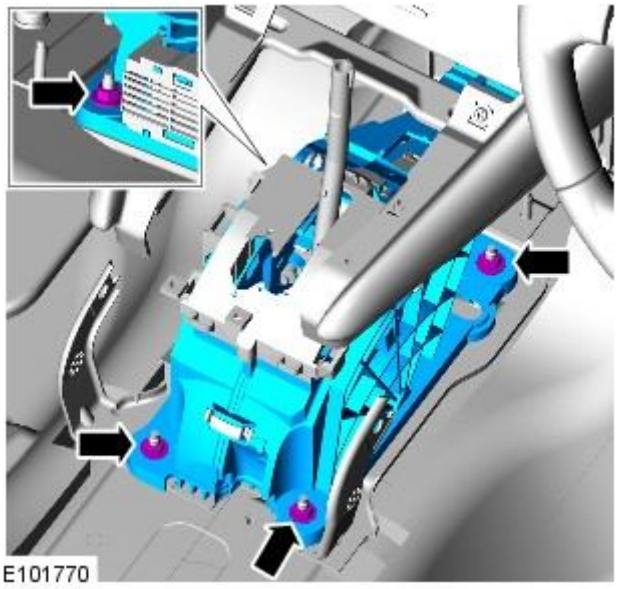

5. Remove the selector lever assembly.

- Remove the 4 nuts.

Installation

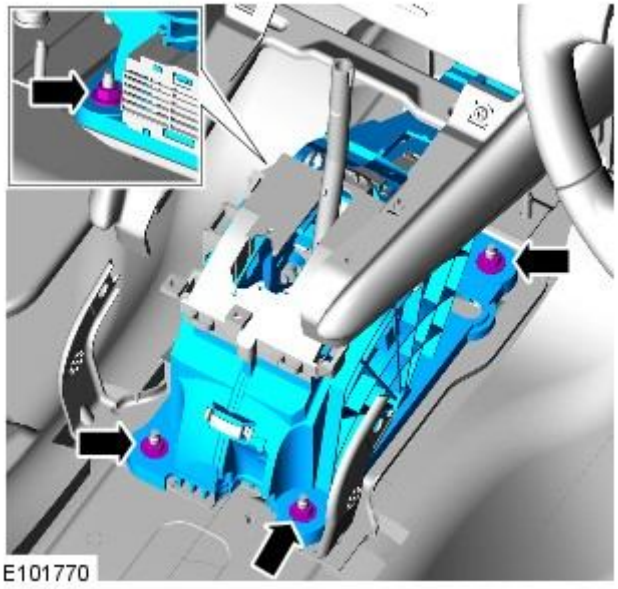

1. NOTE: Tighten the front 2 bolts first.

Install the selector lever assembly.

- Tighten to 10 Nm.

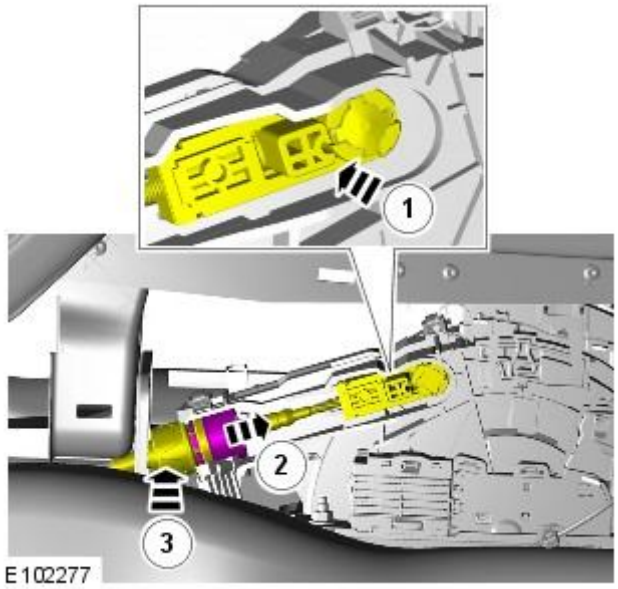

2. Attach the transmission selector lever cable.

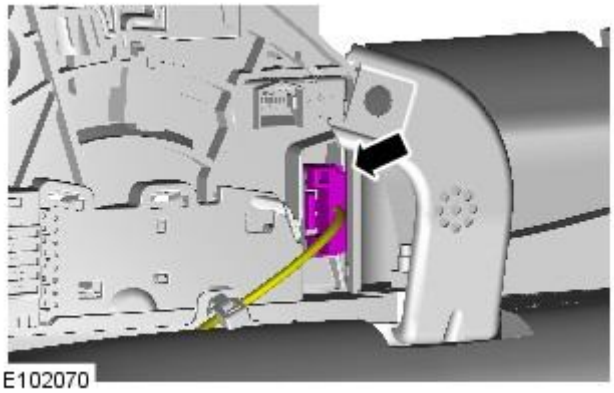
E102070

3. Connect the selector lever assembly electrical connector.

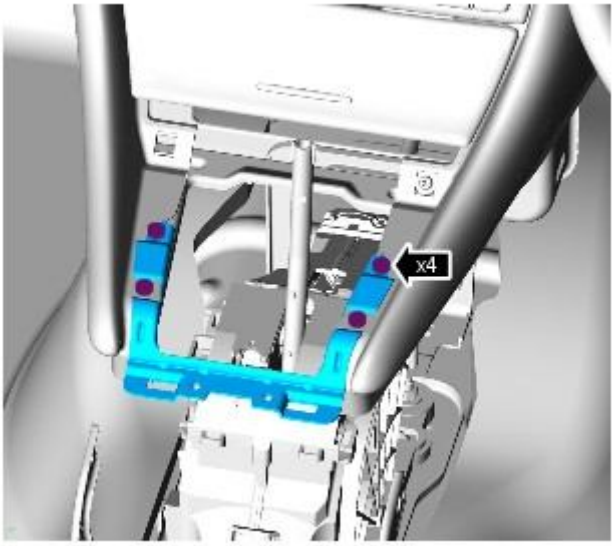

E101768

4. Install the floor console reinforcement bracket.

- Tighten to 3 Nm.

5. Install the floor console.
For additional information, refer to: Floor Console (501-12 Instrument Panel and Console, Removal and Installation).

Automatic Transmission / Transaxle External Controls - Vehicles With: 6-Speed Automatic Transaxle - AWF21 - Selector Lever Knob

Removal and Installation

Removal

1. Release the selector lever gaiter from the selector lever knob.

- Rotate the chrome finisher clockwise and push downwards.

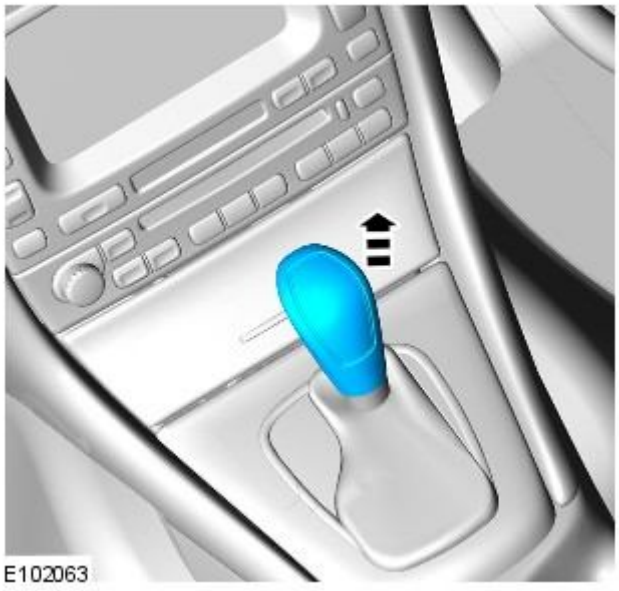

2. WARNING: The selector lever knob will be released suddenly, keep face clear during removal.

Remove the selector lever knob.

- Pull the selector lever knob upwards.

Installation

1. To install, reverse the removal procedure.

Manual Transmission / Transaxle and Clutch - General Information -

Lubricants, Fluids, Sealers and Adhesives

Item	Specification
Brake fluid	ITT Super Dot 4

Published: 11-May-2011

Manual Transmission / Transaxle and Clutch - General Information - Manual Transmission and Clutch

Description and Operation

The clutch system consists of the following components:

- A flywheel
- A clutch disc
- A clutch pressure plate
- A clutch master cylinder
- A clutch slave cylinder
- A clutch release hub and bearing

The clutch master cylinder transmits fluid pressure to the slave cylinder, which in turn moves the clutch release hub and bearing.

The clutch master cylinder uses brake fluid and shares a common reservoir with the brake master cylinder.

The clutch is a single plate, dry-friction disc with a diaphragm-style spring clutch pressure plate. The clutch disc has a hub which is splined to the input shaft. The clutch disc has friction material where it contacts the flywheel and the pressure plate. The clutch pressure plate applies pressure to the clutch disc, holding it tightly against the surface of the flywheel.

In the engaged position, the diaphragm spring holds the clutch pressure plate against the clutch disc, so that engine torque is transmitted to the input shaft. When the clutch pedal is depressed, the clutch release hub and bearing pushes the diaphragm spring center toward the flywheel. The diaphragm spring pivots at the fulcrum, relieving the load on the clutch pressure plate. Steel spring straps riveted to the clutch pressure plate cover pull the clutch pressure plate from the clutch disc, disengaging the engine torque from the transmission and enabling the gears to be changed.

Manual Transmission / Transaxle and Clutch - General Information - Manual Transmission and Clutch

Diagnosis and Testing

Inspection and Verification -Clutch

As fault diagnosis starts when repairs are taken on, the following procedure is recommended:

1. **1.** Verify the customer concern by operating the system.
2. **2.** Visually inspect for obvious signs of mechanical damage.

Visual Inspection Chart

Mechanical	Electrical
● Transmission oil leak ● Missing screws or nuts	● ●

3. **3.** If an obvious cause for an observed or reported concern is found, correct the cause (if possible) before proceeding to the next step.
4. **4.** If the concern is not visually evident, verify the symptom and refer to the Symptom Chart.

Inspection and Verification - Manual Transmission

The following checks should be carried out before repairing or installing a new transmission:

Transmission Noise

If transmission noises are reported, check the transmission fluid level. If damage has occurred due to a lack of fluid, install a new transmission.

Oil Leakage

- Check that the leaking fluid is actually transmission fluid and not hydraulic fluid (from the hydraulically operated clutch) or engine oil.
- Check the transmission fluid level and, as necessary, drain off any excess fluid.
- Clean the transmission and the adjacent areas carefully before the road test.

Symptom Chart - Poor gear shifting

Symptom Chart

Symptom	Possible Sources	Action
Significant effort required when downshifting or synchronizer crashing	* Gear synchronization is inadequate.	* Check oil level. * Check gear linkage. * INSTALL a new transmission.
Gear jumps out of engagement while driving	* Worn or broken synchronizer components. * Manufacturing error (incorrect gear wheel toothing or synchronizer ring).	* INSTALL a new transmission.
Gearshift problems in different gears (stiff or partially seized)	* Gear linkage.	* Check oil level. * Check gear linkage. * INSTALL a new transmission.
Brief scratching noise during gear shifting	* Inadequate gear synchronization.	* Check oil level. * Check gear linkage. * INSTALL a new transmission.

Symptom Chart - Oil leakage

Symptom Chart

Symptom	Possible Sources	Action
Leak from transmission housing	* Leak from breather.	* CHECK oil level.
	* Leak from fill plug.	* TIGHTEN fill plug.
	* Leak from drain plug.	* TIGHTEN drain plug.
	* Sealing lip of the output shaft oil seal damaged.	* INSTALL a new output shaft seal and drive flange if seal is damaged.
	* Oil leaking from the selector shaft oil seal.	* INSTALL a new selector shaft seal.
	* Leak from crankshaft rear seal.	* INSTALL a new crankshaft seal.
	* Leak from clutch hydraulics.	* For additional information, refer to Pinpoint Test H.
	* Sealing lip on input shaft damaged.	* INSTALL a new input shaft seal.

Symptom Chart - General Concerns

Symptom Chart

Symptom	Possible Sources	Action
Clicking noises in reverse gear	* Gear wheels.	* RUN the vehicle on wheel free ramp to establish that the noise is coming from the transmission. If the noise is coming from the transmission INSTALL a new transmission.
Gear wheels banging when shifting	* Damaged clutch.	* CHECK the clutch is clearing correctly. - No-For additional information, refer to Pinpoint Test A. - Yes-CHECK transmission oil level. If transmission level is okay INSTALL a new transmission.
	* Selector forks or synchronizer rings.	* INSTALL a new transmission.
Noises in the forward	* Transmission fluid level low	* FILL the transmission with correct amount of fluid.

gears	* The engine/transmission assembly is in contact with the chassis/body.	* INSPECT for points of contact or damaged engine/transmission isolator, support insulator.
	* Engine/transmission flange bolts.	* TIGHTEN the transmission flange bolts. For additional information, refer to 308-03.
	* Input and output shaft bearings.	* INSTALL a new transmission.
Gears jump out of engagement	* Engine/transmission support insulator. * Internal components.	* REPAIR or INSTALL new components as necessary. * INSTALL a new transmission.
One of the gears cannot be selected	* Gearshift linkage malfunction.	* CHECK gearshift linkage correctly attached to transmission case, sector arm and the rear mounted to body. - CHECK gearshift linkage functions correctly.
	* Transmission internal selection problem.	* INSTALL a new transmission.
Gears jumps out of engagement	* Gearshift linkage fault. * Internal selector mechanism loose. * Synchronizer fault.	* CHECK gearshift linkage for correct function. * INSTALL a new transmission. * INSTALL a new transmission.
Clattering, or rattling noises	* Gearshift mechanism foul to body.	* Make sure that the gearshift mechanism is correctly located onto the gearbox. - Make sure that there are no components fouling the gearshift linkage.
	* Gearshift lever joint.	* CHECK free play in bearing between the lever and support housing, and between the lever and shift arm.
	* Gearshift lever knob loose.	* TIGHTEN the gearshift lever knob or, INSTALL a new knob as necessary.
Gearshift linkage has excessive play	* Gear lever bearing worn. * Gearshift selector rod assembly damaged or worn	* CHECK free play in bearing. INSTALL a new if necessary. * INSTALL a new gearshift selector rod assembly
Gearshift linkage does not operate freely	* Excessive friction in lever bearing. * Gearshift selector rod assembly damaged or worn * Possible fault in transmission	* INSTALL a new lever bearing. * INSTALL new gearshift selector rod assembly * INSTALL new transmission.

Symptom Chart - Clutch

Symptom Chart

Symptom	Possible Sources	Action
Clutch slippage	* Clutch pedal free play. * Sticking clutch pedal. * Diaphragm springs. * Clutch pressure plate. * Clutch disc facing. * Hardened or oiled clutch disc facing surface. * Flywheel.	* GO to Pinpoint Test A.
	* Excessive temperature.	* ALLOW the clutch to fully cool.
	* Slave cylinder sticking.	* CHECK slave cylinder travels freely over its complete travel.
	* Adjuster ring at fully worn position.	* INSTALL a new clutch drive plate.
Clutch chatter or shudder	* Engine mounts. * Oil on clutch disc facing. * Diaphragm springs. * Clutch pressure plate. * Clutch disc facing. * Flywheel.	* GO to Pinpoint Test B.
Clutch drag	* Insufficient brake fluid. * Air in hydraulic system. * Clutch pedal free play. * Diaphragm springs. * Clutch disc. * Clutch disc splines. * Oil on clutch disc facing.	* GO to Pinpoint Test C.
	* Insufficient clutch pedal travel.	* Make sure the clutch pedal has its full range of travel. * Make sure the clutch pedal returns to the fully released position and the reservoir is full.
Clutch pedal pulsation	* Clutch and brake pedal pivot shaft not correctly lubricated. * Flywheel. * Damaged springs in pressure plate.	* GO to Pinpoint Test E.
	* Release bearing noisy or worn.	* INSTALL a new release bearing.
	* Cover assembly.	* CHECK run out of clutch cover. INSTALL a new clutch cover.
Clutch pedal related vibrations	* Engine component grounding against frame. * Accessory drive belt. * Flywheel bolts. * Flywheel. * Imbalanced clutch pressure plate.	* GO to Pinpoint Test E.
Hard shifting	* Insufficient brake fluid. * Clutch pedal free play. * Manual transmission concern.	* GO to Pinpoint Test F.
Excessive noise	* Clutch pedal free play. * Clutch release bearing. * Poor lubrication of clutch release bearing. * Pilot bearing. * Excessive crankshaft end play.	* GO to Pinpoint Test G.
	* If the noise is heard from the transmission when the engine is started and switched off with the clutch engaged, and the noise disappears if the clutch pedal is depressed.	* INSTALL a new flywheel.
Fluid leakage	* Clutch master cylinder. * Clutch slave cylinder. * Clutch hydraulic tubes.	* GO to Pinpoint Test H.

PINPOINT TEST A : CLUTCH SLIPPAGE

TEST CONDITIONS	DETAILS/RESULTS/ACTIONS
A1: TEST CLUTCH SLIPPAGE	
	1 Lock wheels and put parking brake on .
	2 Start the engine and engage 4th gear.
	3 Run the engine at approximately 2000 rpm.
	4 Release clutch pedal slowly.
	Does the engine stall when the clutch pedal is fully released? **Yes** Clutch OK. **No** GO to A2.
A2: TEST CLUTCH FOR CLEARING	
	1 Start engine, fully depress the clutch pedal, partially engage reverse gear, slowly engage clutch until a grating noise is heard, depress the clutch slowly until grating stops.
	2 Measure pedal travel from the pedal to the floor.
	Is the measurement between 25mm and 45mm? **Yes** GO to A3. **No** GO to B3.
A3: TEST FULL PEDAL TRAVEL	
	1 Measure the clutch pedal travel from fully up to fully compressed.
	Is the measurement between 140mm and 150mm? **Yes** GO to A4. **No** CHECK clutch pedal for obstructions. TEST the system for normal operation.
A4: TEST CLUTCH PEDAL	
	1 Check lubrication.
	Is the clutch pedal shaft sufficiently lubricated? **Yes** GO to B3. **No** Lubricate clutch pedal shaft.

PINPOINT TEST B : CLUTCH CHATTER OR SHUDDER

TEST CONDITIONS	DETAILS/RESULTS/ACTIONS
B1: TEST CLUTCH CHATTER OR SHUDDER	
	1 Start the engine and engage 1st gear.
	2 Run the engine between 1200 rpm and 1500 rpm.
	3 Release clutch pedal slowly.
	Does the vehicle jerk when it starts off? **Yes** GO to B2. **No** Clutch OK.
B2: TEST ENGINE/TRANSMISSION SUPPORT INSULATOR	
	1 Check engine/transmission mountings, support insulators for damage or loose bolts.
	Are the engine/transmission mountings, support insulators loose or damaged? **Yes** TIGHTEN the bolts or INSTALL new engine/transmission mountings as necessary. TEST the system for normal operation. **No** GO to B3.
B3: TEST CLUTCH PRESSURE PLATE	
	1 Remove clutch pressure plate.
	Does the clutch pressure plate have signs of wear or damage? **Yes** INSTALL a new clutch pressure plate. **No** GO to B4.
B4: TEST CLUTCH FRICTION DISC	
	1 Visually check the clutch friction disc.
	Is the clutch friction disc oil-fouled or does it have burn marks? **Yes** INSTALL a new clutch friction disc. TEST the system for normal operation. **No** CHECK the flywheel.

PINPOINT TEST C : CLUTCH DRAG

TEST CONDITIONS	DETAILS/RESULTS/ACTIONS
C1: CHECK BRAKE FLUID LEVEL	
• NOTE: The hydraulic clutch fluid is supplied from the brake master cylinder.	
	1 Check the brake fluid level.
	Is the brake fluid level between the MAX and MIN marks on the brake fluid reservoir? **Yes** GO to C2. **No** FILL brake fluid, the brake and clutch system for leaks. Test system for normal operation.
C2: TEST CLUTCH PEDAL FREE TRAVEL	
	1 Operate clutch pedal manually to the point of resistance and release.
	2 Measure pedal travel.

	Is the measured dimension within 15 mm? **Yes** INSTALL a new clutch pressure plate. TEST the system for normal operation. **No** GO to B3.

PINPOINT TEST D : CLUTCH PEDAL PULSATION	
TEST CONDITIONS	**DETAILS/RESULTS/ACTIONS**
D1: TEST CLUTCH PEDAL	
	1 Check lubrication.
	Is the clutch pedal shaft sufficiently lubricated? **Yes** CHECK the flywheel. **No** LUBRICATE the clutch pedal shaft. TEST the system for normal operation.

PINPOINT TEST E : CLUTCH RELATED VIBRATIONS	
TEST CONDITIONS	**DETAILS/RESULTS/ACTIONS**
E1: CHECK FOR ENGINE COMPONENT GROUNDING	
	1 Raise and support the vehicle. REFER to: Jacking (100-02 Jacking and Lifting, Description and Operation).
	2 Check the engine mountings for grounding on the body frame.
	3 Check the exhaust manifold or other engine component grounding on the body or frame.
	Is there evidence of grounding on body or frame? **Yes** REPAIR or INSTALL a new as necessary. TEST the system for normal operation. **No** GO to E2.
E2: CHECK FOR ACCESSORY DRIVE VIBRATIONS	
	1 Feel accessory vibration at clutch engage/disengage when engine torque changes.
	2 Disconnect the accessory drive belt and check for vibration.
	Does the vibration stop when the drive belt is removed from the engine? **Yes** REPAIR or INSTALL new accessory drive belt components. REFER to: Accessory Drive - 4.2L/2.5L/3.0L (303-05 Accessory Drive, Diagnosis and Testing), Noise, Vibration and Harshness (NVH) (100-04 Noise, Vibration and Harshness, Diagnosis and Testing). **No** GO to E3.
E3: CHECK FOR RELEASE BEARING NOISE	
	1 Start the engine.
	2 Depress and hold clutch pedal.
	Is a whirring, grating or grinding noise present? **Yes** INSTALL a new clutch slave cylinder. . TEST the system for normal operation. **No** GO to E4.
E4: INSPECT FLYWHEEL	
	1 Remove the transmission. • Five speed transmission - REFER to: Manual Transmission (308-03 Manual Transmission/Transaxle - Vehicles With: 5-Speed Manual Transmission, Diagnosis and Testing). • Six speed transmission - REFER to: Manual Transmission (308-03 Manual Transmission/Transaxle - Vehicles With: 6-Speed Manual Transmission, Diagnosis and Testing).
	2 Inspect for loose flywheel bolts.
	3 Carry out flywheel runout check.
	Is the flywheel OK? **Yes** DIAGNOSE engine vibration concern. REFER to: Engine - 4.2L/2.5L/3.0L (303-00 Engine System - General Information, Diagnosis and Testing). or REFER to: Engine - 2.7L Diesel (303-00 Engine System - General Information, Diagnosis and Testing). **No** TIGHTEN flywheel bolts or INSTALL a new flywheel. Test the system for normal operation.

PINPOINT TEST F : HARD SHIFTING	
TEST CONDITIONS	**DETAILS/RESULTS/ACTIONS**
F1: CHECK FLUID LEVEL	
• NOTE: The hydraulic clutch fluid is supplied from the brake master cylinder.	
	1 Inspect the fluid level in the brake master cylinder reservoir.
	Is the fluid within the MAX and MIN level marks? **Yes** GO to C2. **No** FILL brake fluid, CHECK for leaks in the clutch and brake system. TEST the system for leaks.

PINPOINT TEST G : EXCESSIVE NOISE	
TEST CONDITIONS	**DETAILS/RESULTS/ACTIONS**
G1: CHECK TRANSMISSION NEUTRAL POSITION	
	1 Start the engine and run it in neutral.
	2 Depress clutch pedal fully.

	Are there noises when the clutch is operated? **Yes** GO to G2. **No** System OK.
G2: TEST CLUTCH PEDAL FREE TRAVEL	
	1 Press the clutch down manually until resistance is felt, then release it again.
	2 Measure pedal travel.
	Is the measured dimension within 15 mm? **Yes** GO to G3. **No** INSTALL a new clutch master cylinder.
G3: TEST CLUTCH SLAVE CYLINDER WITH RELEASE BEARING	
	1 Remove the transmission. • Five speed transmission - REFER to: Manual Transmission (308-03 Manual Transmission/Transaxle - Vehicles With: 5-Speed Manual Transmission, Diagnosis and Testing). • Six speed transmission - REFER to: Manual Transmission (308-03 Manual Transmission/Transaxle - Vehicles With: 6-Speed Manual Transmission, Diagnosis and Testing).
	2 Check the clutch slave cylinder bolts.
	3 Check the release bearing for wear and rust.
	Are the bolts loose or are there signs of wear or rust? **Yes** TIGHTEN the bolts or INSTALL a new clutch slave cylinder with the release bearing. TEST the system for normal operation. **No** GO to G4.
G4: CHECK CLUTCH FRICTION DISC TORSION SPRINGS	
	1 Check torsion springs for wear.
	Do the torsion springs have signs of wear? **Yes** INSTALL a new clutch friction disc. TEST the system for normal operation. **No** Check crankshaft end play. REFER to: Camshaft End Play (303-00 Engine System - General Information, General Procedures).

PINPOINT TEST H : FLUID LEAKAGE	
TEST CONDITIONS	**DETAILS/RESULTS/ACTIONS**
H1: INSPECT CLUTCH MASTER CYLINDER	
	1 Inspect the clutch master cylinder for leakage.
	Is the clutch master cylinder OK? **Yes** GO to H2. **No** INSTALL a new clutch master cylinder as necessary. REFER to: Clutch Master Cylinder (308-02 Clutch Controls, Removal and Installation).
H2: INSPECT CLUTCH SLAVE CYLINDER	
	1 Inspect the clutch slave cylinder for leaks.
	Is the clutch slave cylinder OK? **Yes** GO to H3. **No** INSTALL a new clutch slave cylinder as necessary.
H3: INSPECT SYSTEM HYDRAULIC TUBES	
	1 Inspect the clutch hydraulic tubes for loose or damaged fittings causing leakage.
	Are the clutch hydraulic tubes OK? **Yes** CARRY OUT road test to verify customer complaint. **No** INSTALL new components as necessary. Carry out road test.

Manual Transmission / Transaxle and Clutch - General Information - Clutch System BleedingVehicles With: 5-Speed Manual Transmission - MT75

General Procedures

1. WARNING: Brake fluid contains polyglycol ethers and polyglycols. Avoid contact with the eyes. Wash hands thoroughly after handling. If brake fluid contacts the eyes, flush the eyes for 15 minutes with cold water. Get medical attention immediately if irritation persists. If taken internally, drink water and induce vomiting. Get medical attention immediately. Failure to follow these instructions may result in personal injury.

CAUTION: If brake fluid comes into contact with the paintwork, it should be washed down immediately with cold water.

• NOTE: Make sure of absolute cleanliness when filling brake fluid.

• NOTE: Do not re-use brake fluid.

Bleed the clutch system.

2. Fill the brake fluid reservoir with brake fluid.

3. Raise and support the vehicle. For additional information, refer toSection 100-02 Jacking and Lifting

4. Remove the bleed nipple cover.

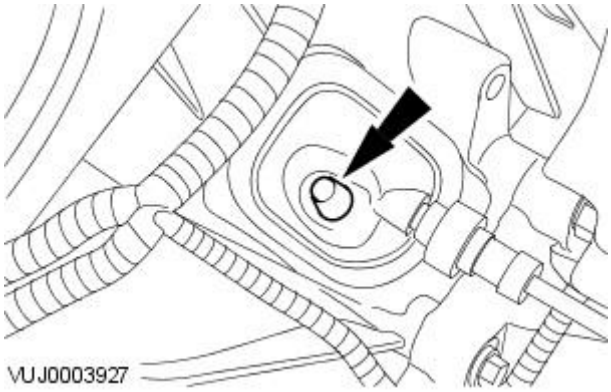

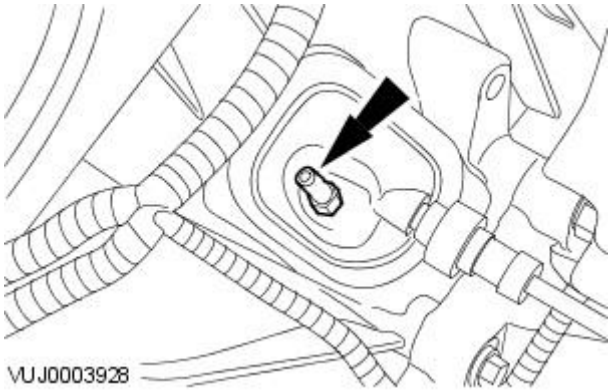

5. Bleed the clutch system.

- Attach a proprietary bleed jar to the bleed nipple and open the bleed nipple one turn.
- Depress the clutch pedal repeatedly until the emerging fluid is free of bubbles; always make sure that there is sufficient fluid (5 mm above the MAX) in the reservoir.
- After bleeding, tighten the bleed nipple.
- Install the bleed nipple cover.
- Install the dust cover.
- After bleeding, depress the clutch ten times and check that it is functioning correctly.

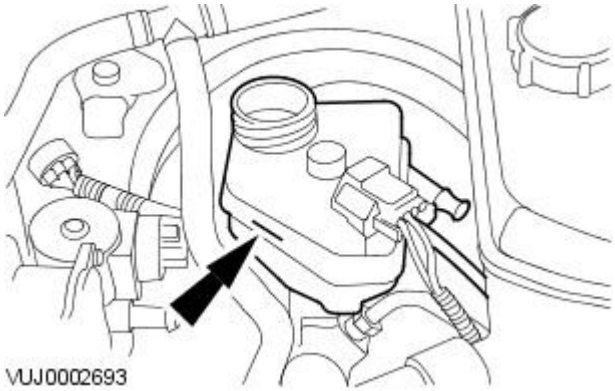

6. NOTE: Make sure of absolute cleanliness when filling brake fluid.

Check the brake fluid level.

- The fluid level should be between the MIN and MAX marks. If the level drops below the MIN mark, the brake warning indicator will light up.
- As necessary, fill the brake fluid reservoir with brake fluid.

Manual Transmission / Transaxle and Clutch - General Information - Clutch System BleedingVehicles With: 6-Speed Manual Transaxle - MMT6

General Procedures

1. WARNING: Brake fluid contains polyglycol ethers and polyglycols. Avoid contact with the eyes. Wash hands thoroughly after handling. If brake fluid contacts the eyes, flush the eyes for 15 minutes with cold water. Get medical attention immediately if irritation persists. If taken internally, drink water and induce vomiting. Get medical attention immediately. Failure to follow these instructions may result in personal injury.

CAUTION: If brake fluid comes into contact with the paintwork, it should be washed down immediately with cold water.

- NOTE: Make sure of absolute cleanliness when filling brake fluid.
- NOTE: Do not re-use brake fluid.

Bleed the clutch system.

2. Fill the brake fluid reservoir with brake fluid.

3. Raise and support the vehicle. For additional information, refer to For additional information, refer to: Lifting (100-02 Jacking and Lifting, Description and Operation).

4. Remove the bleed nipple cover.

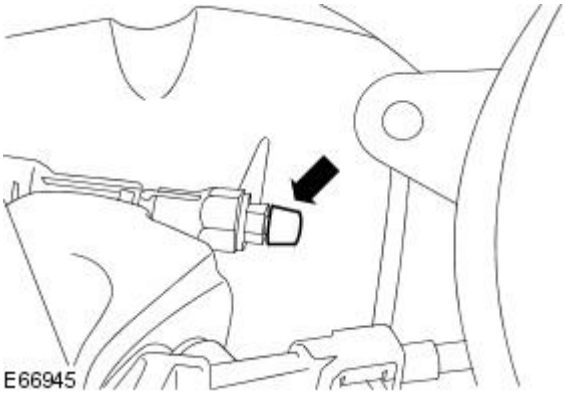

5. Bleed the clutch system.

- Attach a proprietary bleed jar to the bleed nipple and open the bleed nipple one turn.
- Depress the clutch pedal repeatedly until the emerging fluid is free of bubbles; always make sure that there is sufficient fluid (5 mm above the MAX) in the reservoir.
- After bleeding, tighten the bleed nipple.
- Install the bleed nipple cover.
- Install the dust cover.
- After bleeding, depress the clutch ten times and check that it is functioning correctly.

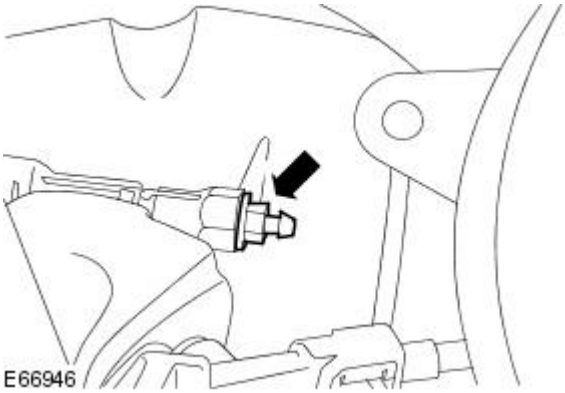

6. NOTE: Make sure of absolute cleanliness when filling brake fluid.

Check the brake fluid level.

- The fluid level should be between the MIN and MAX marks. If the level drops below the MIN mark, the brake warning indicator will light up.
- As necessary, fill the brake fluid reservoir with brake fluid.

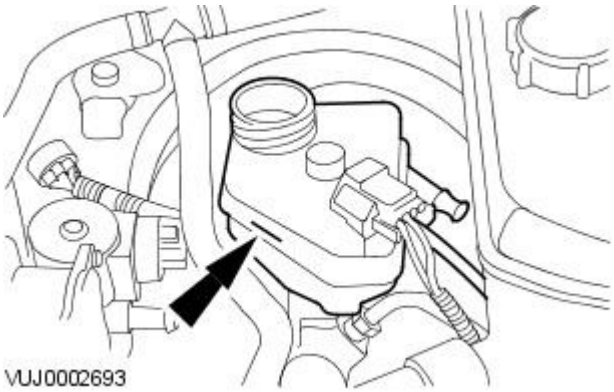

Manual Transmission / Transaxle and Clutch - General Information - Gearshift Cable Adjustment

General Procedures

Special Tool(s)	
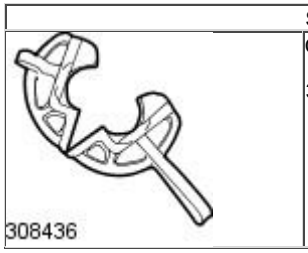 308436	Gearshift selector setting tool 308-436

1. Remove the wheel and tire. For additional information, refer to Section 204-04 Wheels and Tires
2. Detach the gearshift lever surround.

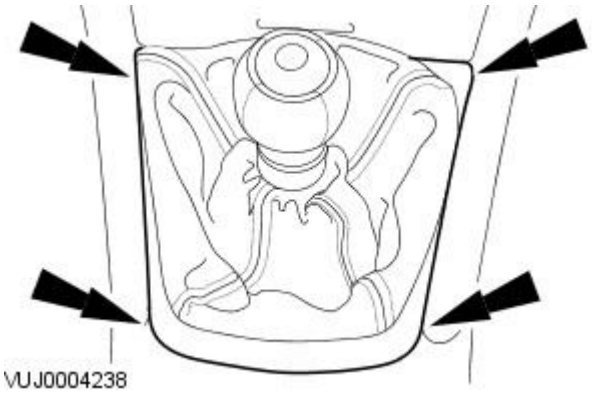

3. NOTE: Upper selector cable shown, lower shift cable similar.

   Detach the shift and selector cables.

   1. Press the button.
   2. Detach the selector cable.

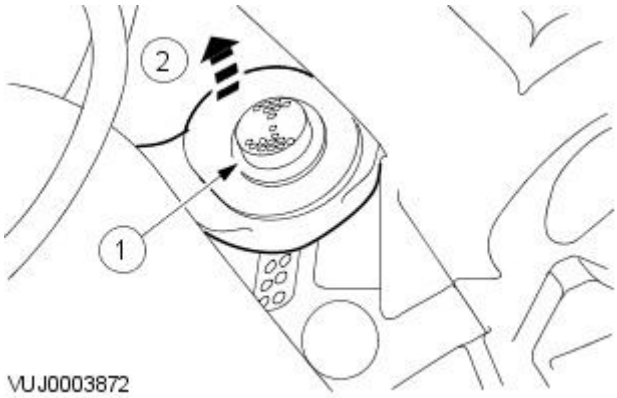

4. NOTE: Lift the reverse gear selector to fit special tool.

   Using the special tool, make sure the gearshift lever is in the neutral position.

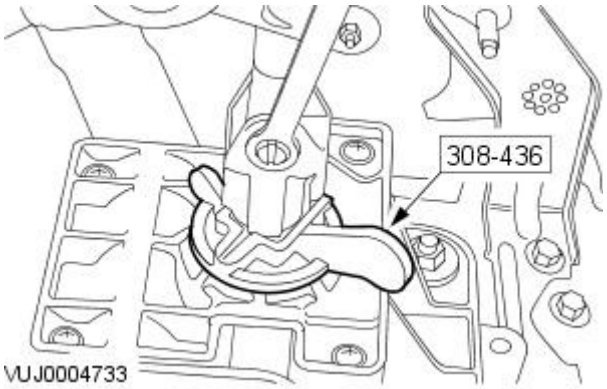

5. Make sure the transmission selector is in the fourth gear position.

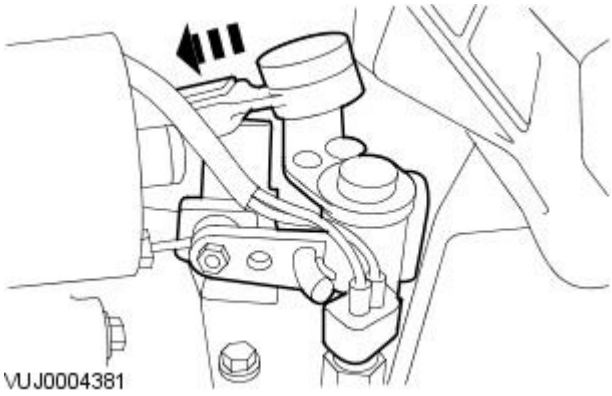

• NOTE: Shift cable has a black cover to cable end and the selector cable has a white cover to cable end.

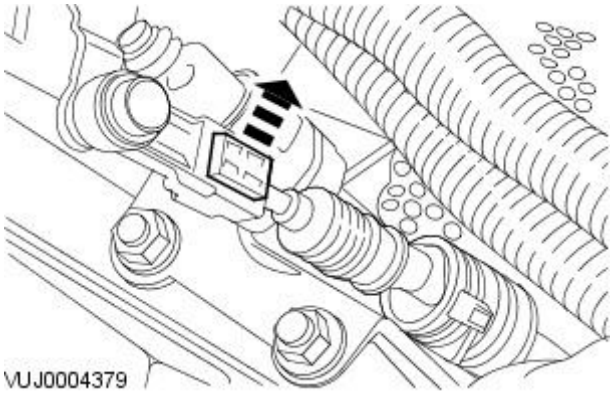

6. Detach the red locking tab on the shift cable.

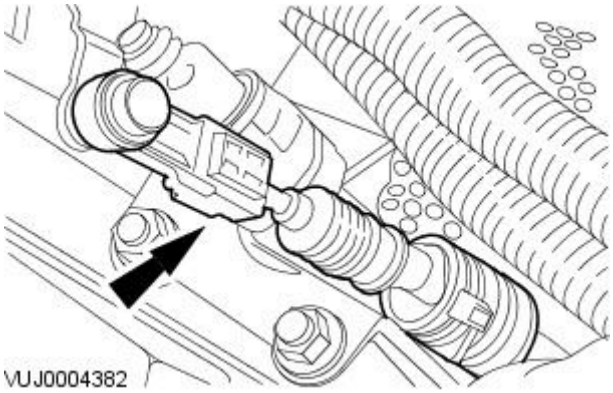

7. Attach the shift cable to the ball pin on the transmission selector.

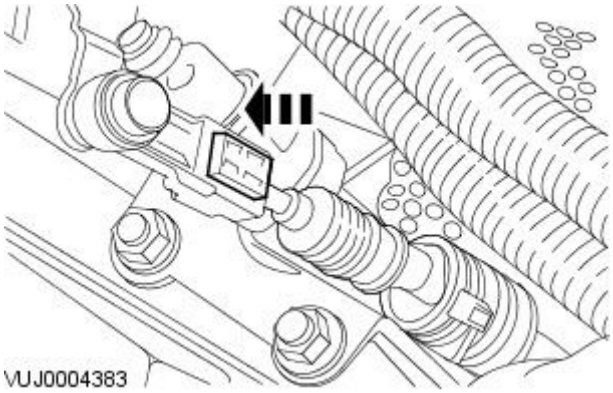

8. Press the red locking tab to secure the position of the shift cable.

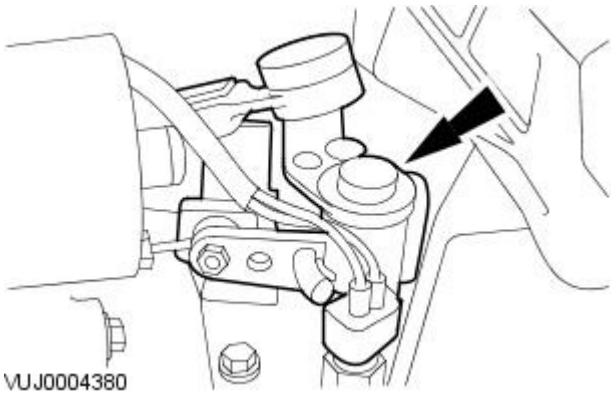

9. Place the transmission selector into the neutral position.

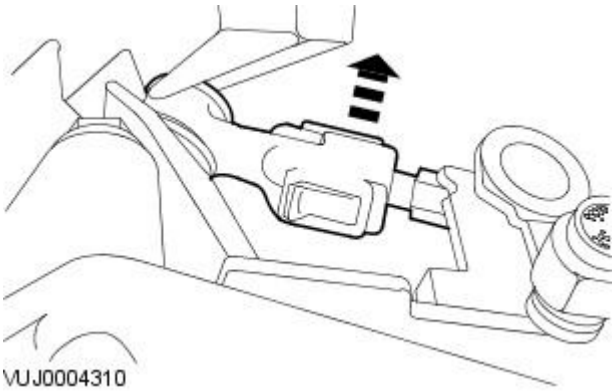

10. Detach the red locking tab on the selector cable.

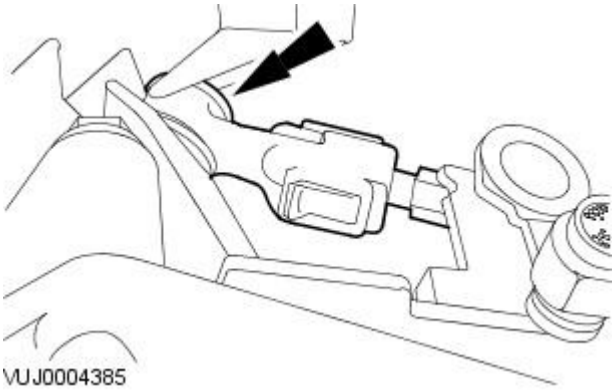

11. Attach the selector cable to the ball pin on the gearbox mass damper.

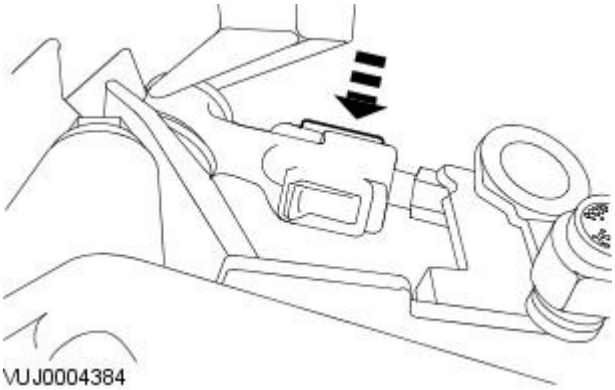

12. Press the red locking tab to secure the position of the selector cable.

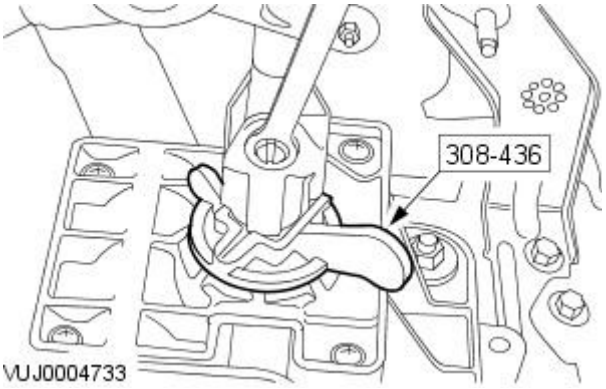

13. Remove the gearshift selector setting tool.

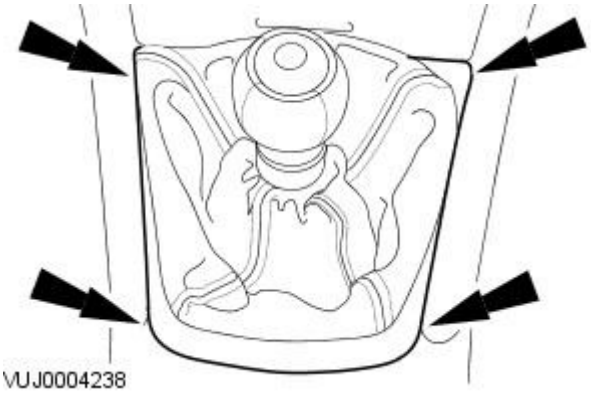

14. Install the gearshift lever surround.

15. Check for correct operation of gear controls.

16. Install the wheel and tire. For additional information, refer to Section 204-04 Wheels and Tires

Manual Transmission / Transaxle and Clutch - General Information - Release Hub and Bearing Check

General Procedures

1. Turn the clutch release hub and bearing in both directions and check for any binding or abnormal noise.

2. CAUTION: The clutch release hub and bearing is sealed and must not be immersed in any type of cleaning fluid.

   Check for worn or damaged clutch release hub and bearing contact surfaces.

3. Install the clutch release hub and bearing on the input shaft and check for a smooth sliding condition.

Published: 11-May-2011

Clutch -

Torque Specifications

Description	Nm	lb-ft	lb-in
Pressure plate retaining bolts	25	18	-

Clutch - Clutch

Description and Operation

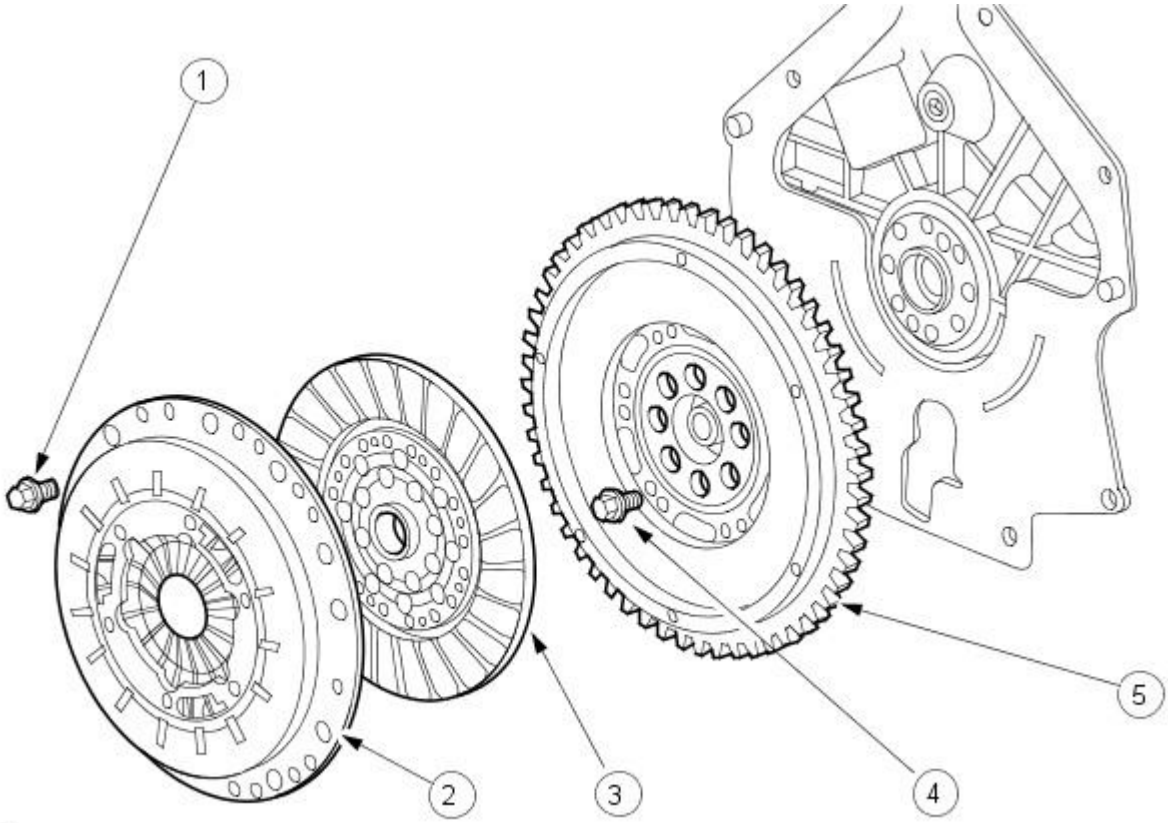

VUJ0004131

Item	Part Number	Description
1	—	Pressure plate retaining bolt
2	—	Pressure plate
3	—	Clutch disc
4	—	Flywheel retaining bolt
5	—	Flywheel

The clutch transfers the engine torque to the transmission.

The clutch consists of a disc and a pressure plate with a diaphragm spring, bolted to the flywheel.

When the clutch pedal is operated the power transmission from the engine to the transmission is interrupted. The clutch is therefore engaged when the pedal is not depressed. Pressing down the pedal disengages the clutch.

Published: 11-May-2011

Clutch - Clutch

Diagnosis and Testing

For additional information, refer to Section 308-00 Manual Transmission/Transaxle and Clutch - General Information.

Clutch - Clutch Disc and Pressure Plate

Removal and Installation

Special Tool(s)	
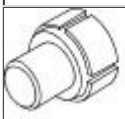 308-441	Clutch alignment tool 308-441

Removal

All except vehicles with diesel engine

1. Remove the manual transmission.
   For additional information, refer to: Transaxle - 2.0L NA V6 - AJV6/2.5L NA V6 - AJV6/3.0L NA V6 - AJ27 (308-03 Manual Transmission/Transaxle, Removal).

Vehicles with diesel engine

2. Remove the manual transmission.
   For additional information, refer to: Transaxle - 2.0L Duratorq-TDCi (308-03 Manual Transmission/Transaxle, Removal) / Transaxle - 2.2L Duratorq-TDCi (110kW/150PS) - Puma (308-03 Manual Transmission/Transaxle, Removal).

All vehicles

3. Remove the clutch disc and pressure plate.
   - Remove the pressure plate bolts in a uniform sequence.

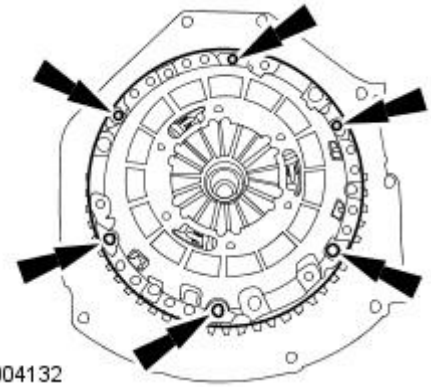

VUJ0004132

Installation

All except vehicles with diesel engine

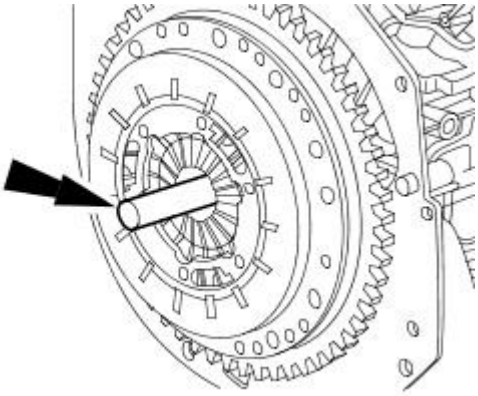

VUJ0004133

1. NOTE: The clutch disc is marked "Transmission side" for correct installation.

   Using the special tool, align the clutch assembly.

All vehicles

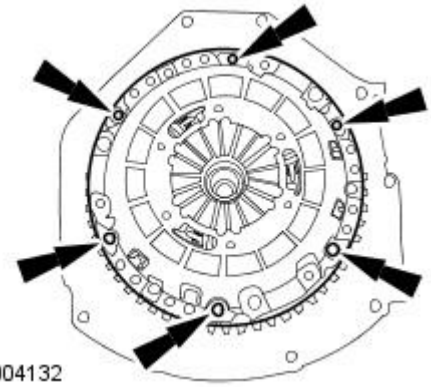

2. NOTE: The clutch disc is marked "Transmission side" for correct installation.

Locate the clutch pressure plate on the flywheel dowels and tighten the bolts progressively in a diagonal sequence.

- Tighten to 25 Nm.

Vehicles with diesel engine

3. NOTE: Make sure that the input shaft of the transmission is moved squarely into the hub of the clutch disc. Do not bend in any direction.

Install the manual transmission.
For additional information, refer to: Transaxle - 2.0L Duratorq-TDCi (308-03 Manual Transmission/Transaxle, Installation) / Transaxle - 2.2L Duratorq-TDCi (110kW/150PS) - Puma (308-03 Manual Transmission/Transaxle, Installation).

All except vehicles with diesel engine

4. Remove the special tool.

5. NOTE: Make sure that the input shaft of the transmission is moved squarely into the hub of the clutch disc. Do not bend in any direction.

Install the manual transmission.
For additional information, refer to: Transaxle - 2.0L NA V6 - AJV6/2.5L NA V6 - AJV6/3.0L NA V6 - AJ27 (308-03 Manual Transmission/Transaxle, Installation).

Published: 11-May-2011

Clutch Controls -

General Specifications

Item	Specification
Brake fluid	ITT super dot 4

Torque Specifications

Description	Nm	lb-ft	lb-in
Clutch slave cylinder retaining bolts	10	7	-
Clutch master cylinder retaining nuts and bolts	10	7	-
Clutch pedal retaining nut	23	17	-
Engine wiring harness bracket retaining bolts	10	7	-

Clutch Controls - Clutch Controls

Description and Operation

Vehicles with 5-speed manual transmission

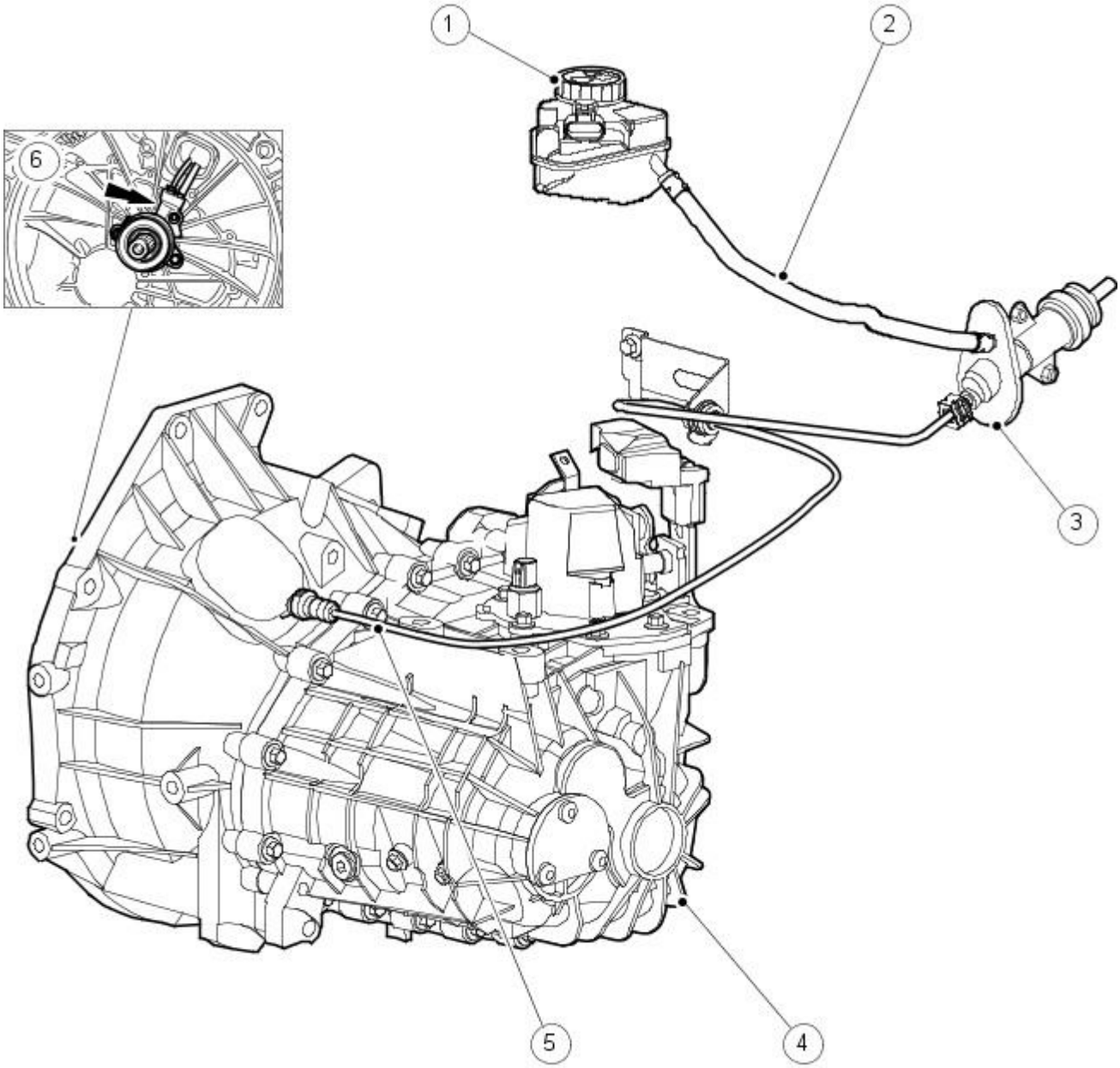

VUJ0004195

Item	Part Number	Description
1	—	Brake fluid reservoir
2	—	Clutch master cylinder supply line
3	—	Clutch master cylinder
4	—	Transmission
5	—	Clutch slave cylinder supply line
6	—	Clutch slave cylinder

Vehicles with 6-speed manual transmission

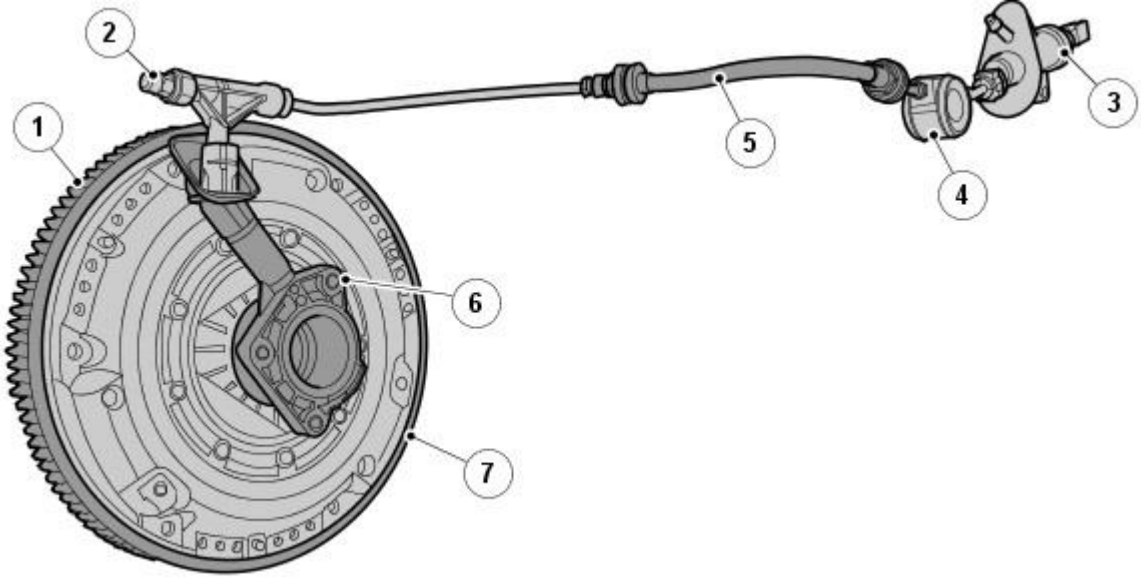

Item	Part Number	Description
1	-	Flywheel
2	-	Bleed nipple
3	-	Clutch master cylinder
4	-	Vibration damper
5	-	Hydraulic line
6	-	Clutch slave cylinder
7	-	Self-adjusting clutch

This vehicle has a hydraulically operated clutch. The brake master cylinder reservoir has a separate chamber and is used to supply the hydraulic clutch system with fluid.

Depressing the clutch pedal builds up pressure in the clutch master cylinder and operates the release bearing integrated in the clutch slave cylinder.

The hydraulic clutch system has the following advantages:

- Automatic adjustment.
- Low operating effort.
- Minimal wear.

Reservoir

The brake fluid reservoir supplies both the hydraulic clutch system and the brake system with brake fluid.

The hydraulic clutch system and the brake system are separate inside the brake fluid reservoir. In the event of any leaks in the hydraulic clutch system the brake system remains fully operative.

Clutch Master Cylinder

The pressure required to operate the clutch system is produced in the clutch master cylinder.

When the clutch pedal is depressed the piston rod moves the piston in the clutch master cylinder. This displaces the hydraulic fluid in the clutch master cylinder, which in turn displaces the hydraulic fluid in the clutch slave cylinder via the high - pressure line.

Clutch Slave Cylinder

Vehicles with 6-speed manual transmission

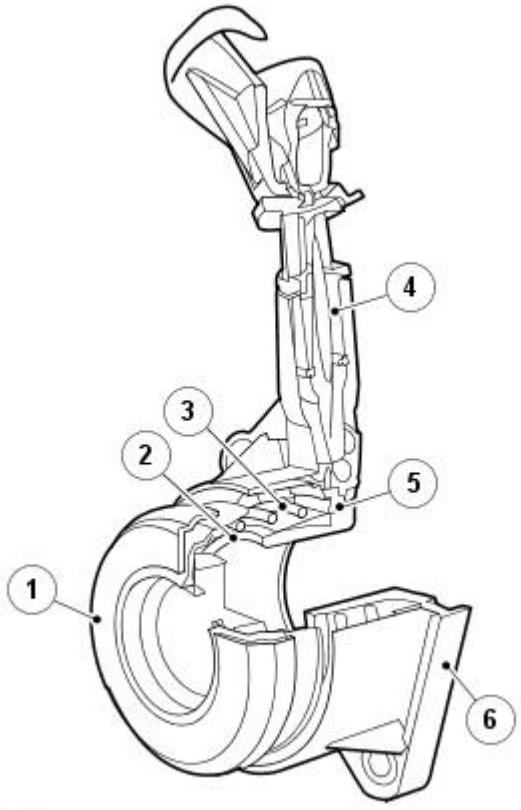

E67497

Item	Part Number	Description
1	-	Release bearing
2	-	Protective cap
3	-	Pressure spring
4	-	Hydraulic channel
5	-	Oil seal
6	-	Plastic housing

The central slave cylinder is fixed to the clutch housing with three bolts, together with an integrated release bearing. The release bearing is a press - fit on the clutch slave cylinder.

The hydraulic fluid which is displaced by the master cylinder piston moves the piston in the clutch slave cylinder, which in turn moves the release bearing in an axial direction. The release bearing presses against the tongues of the diaphragm spring with the inner bearing ring. This breaks the friction contact between the clutch disc and the flywheel.

When the clutch pedal is released the diaphragm spring returns the piston in the clutch slave cylinder to its original position. This restores the friction contact between the clutch disc and the flywheel.

Published: 11-May-2011

Clutch Controls - Clutch Controls

Diagnosis and Testing

For additional information, refer to Section 308-00 Manual Transmission/Transaxle and Clutch - General Information

Clutch Controls - Clutch Master Cylinder

Removal and Installation

Removal

All vehicles

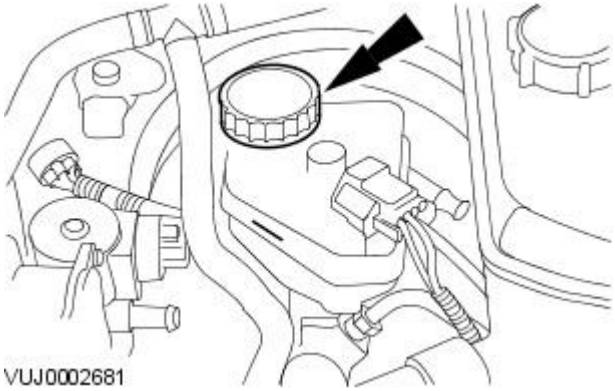

1. WARNING: Do not allow brake fluid to contact the skin or eyes. If brake fluid comes into contact with the skin or eyes, rinse the affected places immediately with water. Failure to follow this instructions can result in personal injury.

CAUTION: If brake fluid is spilt on the paintwork, the affected area must be immediately washed down with cold water.

- NOTE: Make sure the filler cap does not become contaminated.

Remove the brake fluid reservoir filler cap.

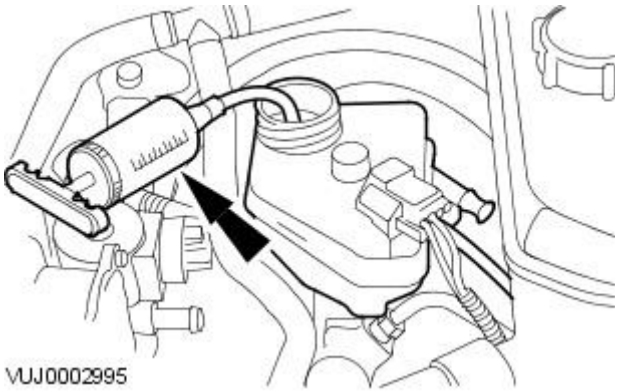

2. Using a suitable suction device drain the brake fluid reservoir.

All except vehicles with diesel engine

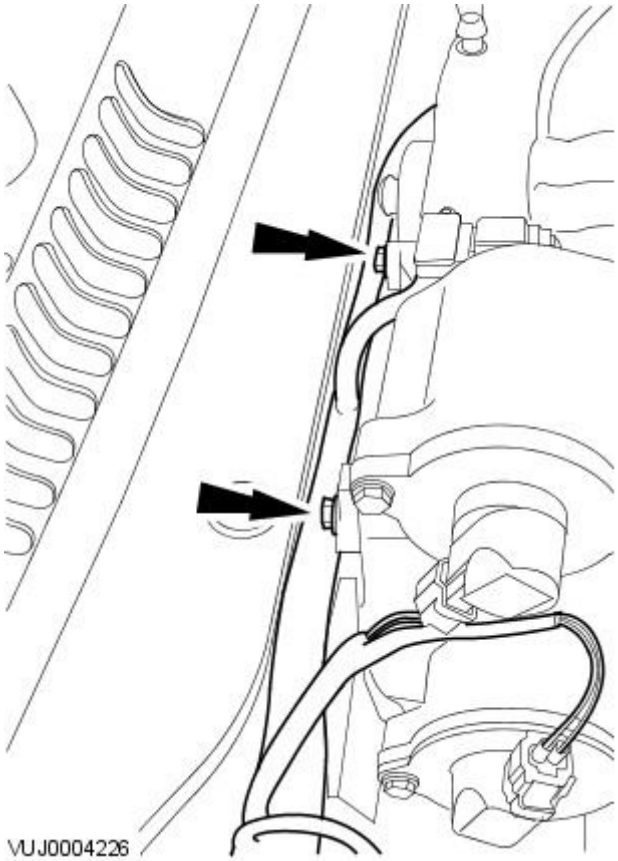

3. Detach the engine wiring harness from the intake manifold.

All vehicles

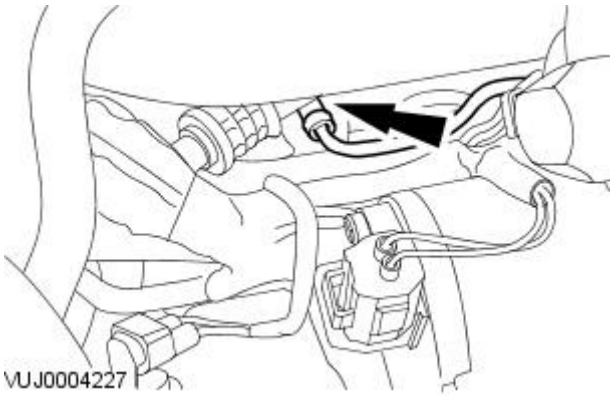

4. Disconnect the clutch master cylinder supply line.

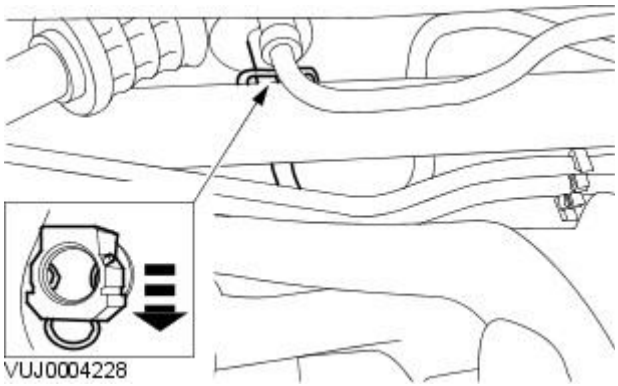

5. Disconnect the clutch slave cylinder supply line from the clutch master cylinder.

- Release the retaining clip to disconnect the line.

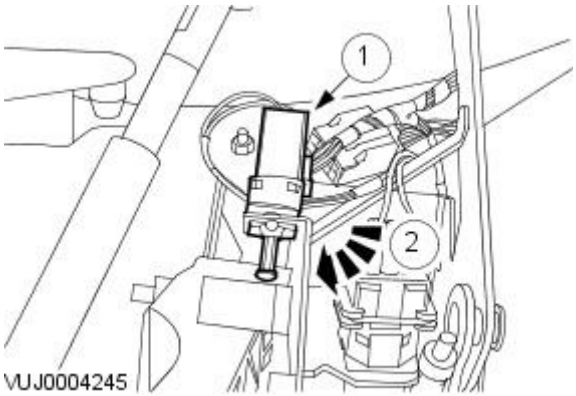

6. Remove the clutch pedal position switch.

1. Disconnect the electrical connector.
2. Remove the clutch pedal position switch.

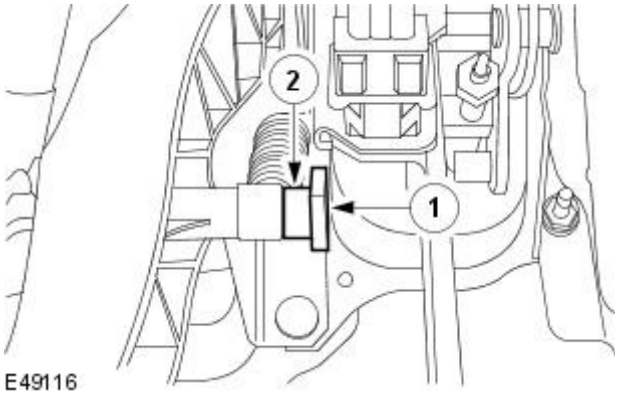

7. Remove the clutch pedal return spring pin retaining clip and spacer.

1. Remove the clutch pedal return spring pin retaining clip.
2. Remove the clutch pedal return spring pin spacer.

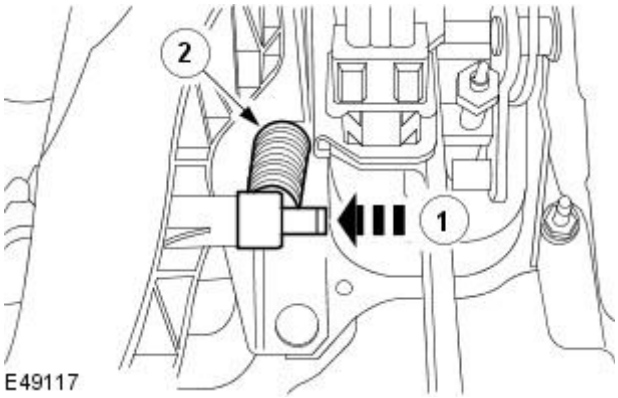

8. Remove the clutch pedal return spring.

1. Remove the clutch pedal return spring pin.
2. Remove the clutch pedal return spring.

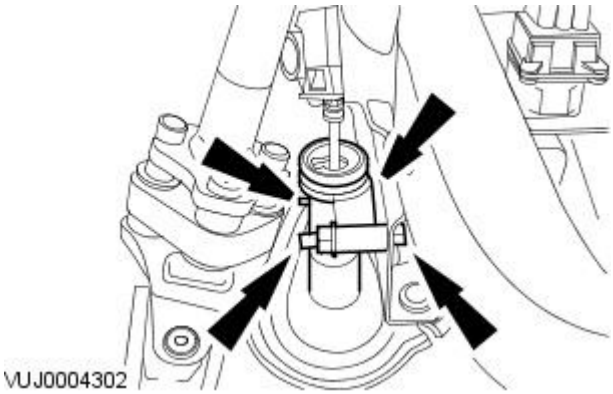

9. Remove the clutch master cylinder retaining nuts and bolts.

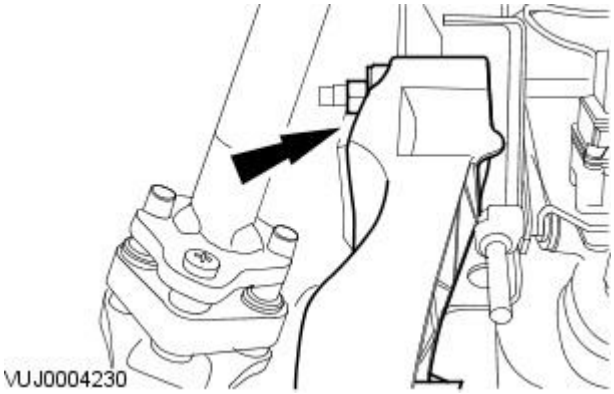

10. Remove the clutch master cylinder and clutch pedal.

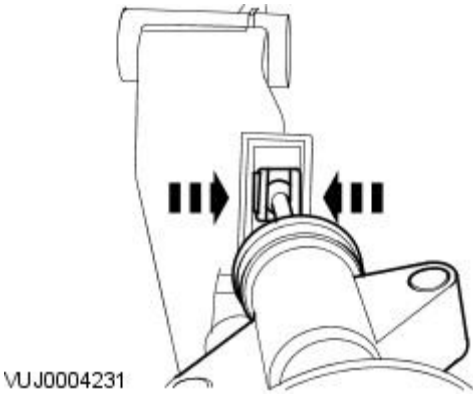

11. Remove the clutch master cylinder from the clutch pedal.

Installation

All vehicles

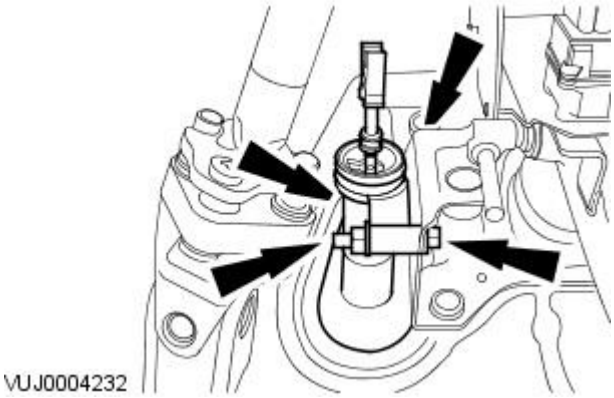

1. Install the clutch master cylinder.

- Tighten to 10 Nm.

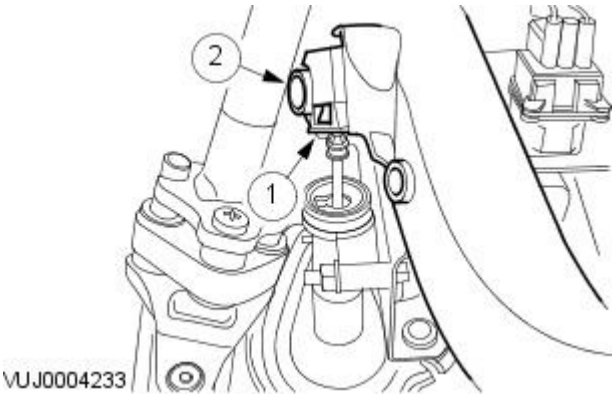

2. Install the clutch pedal.

1. Attach the clutch pedal to the clutch master cylinder.
2. Attach the clutch pedal to the support bracket.
    1. Tighten to 23 Nm.

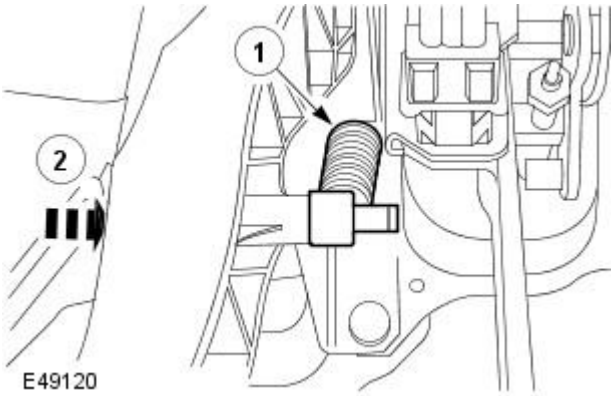

3. Install the clutch pedal return spring pin.

1. Install the clutch pedal return spring.
2. Install the clutch pedal return spring pin.

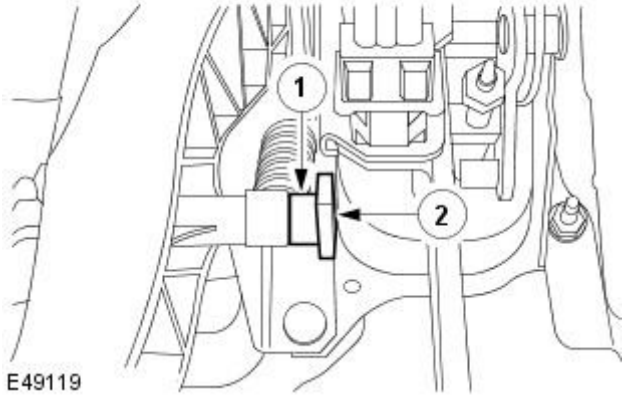

4. Install the clutch pedal return spring pin spacer and retaining clip.

1. Install the clutch pedal return spring pin spacer.
2. Install the clutch pedal return spring pin retaining clip.

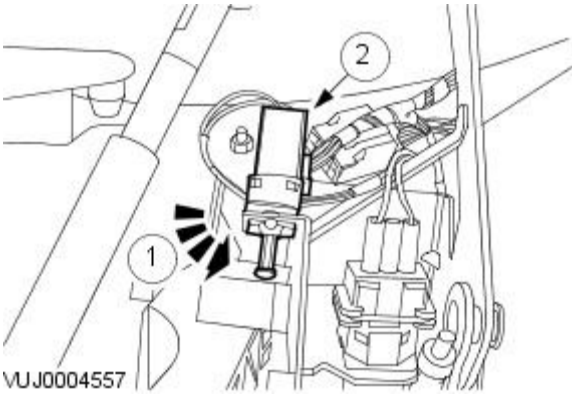

5. Install the clutch pedal position switch.

1. Install the clutch pedal position switch.
2. Connect the electrical connector.

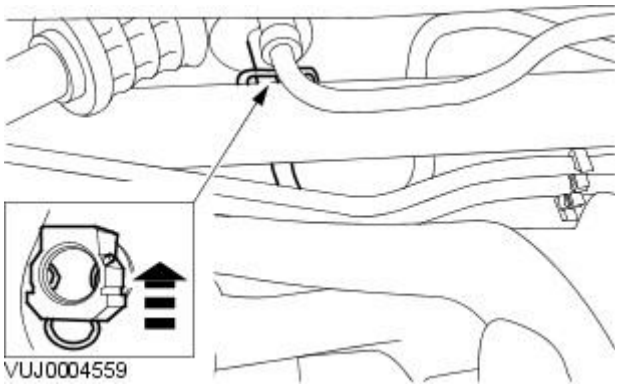

6. NOTE: Reposition the retaining clip.

Connect the clutch slave cylinder supply line to the clutch master cylinder.

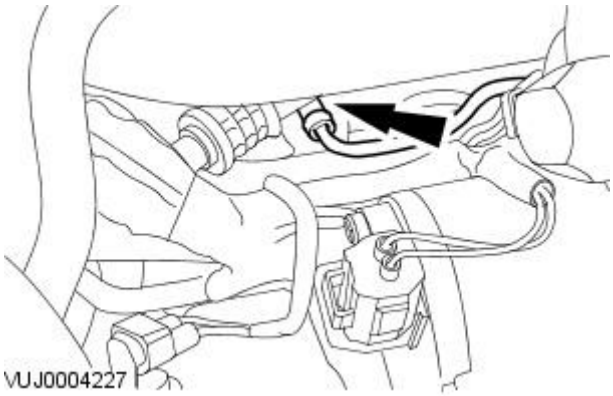

7. Connect the clutch master cylinder supply line.

All except vehicles with diesel engine

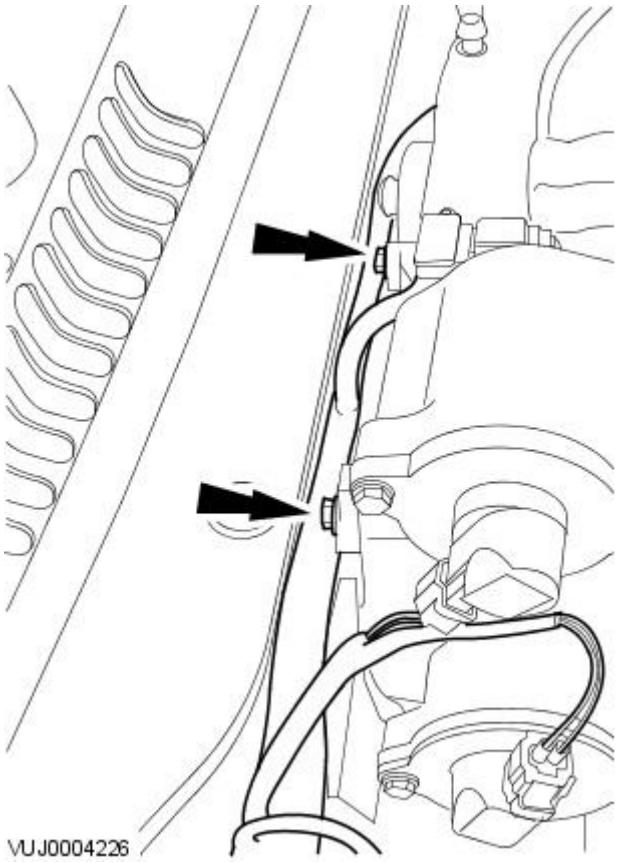

8. Attach the engine wiring harness to the intake manifold.

- Tighten to 10 Nm.

All vehicles

9. Bleed the hydraulic clutch system.
For additional information, refer to: Clutch System Bleeding - Vehicles With: 6-Speed Manual Transaxle - MMT6 (308-00 Manual Transmission/Transaxle and Clutch - General Information, General Procedures).

Clutch Controls - Clutch Slave CylinderVehicles With: 5-Speed Manual Transmission - MT75

Removal and Installation

Removal

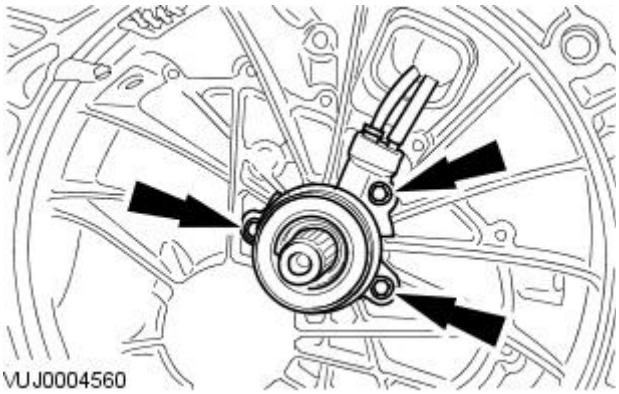

1. NOTE: The clutch slave cylinder assembly must be replaced whenever it is removed.

Remove the manual transmission.
For additional information, refer to: Transaxle - 2.0L Duratorq-TDCi (308-03 Manual Transmission/Transaxle, Removal) / Transaxle - 2.0L NA V6 - AJV6/2.5L NA V6 - AJV6/3.0L NA V6 - AJ27 (308-03 Manual Transmission/Transaxle, Removal).

2. WARNING: Do not allow brake fluid to contact the skin or eyes. If brake fluid comes into contact with the skin or eyes, rinse the affected areas immediately with water. Failure to follow this instructions can result in personal injury.

CAUTION: Brake fluid will escape when the lines are disconnected.

Remove the clutch slave cylinder.

- Detach the rubber grommet.
- Remove the clutch slave cylinder.

Installation

1. NOTE: Apply suitable tape to the input shaft to protect the slave cylinder seal from damage. Remove the tape when the slave cylinder is installed.

• NOTE: Apply sealer to the mating faces of the clutch slave cylinder and the transmission housing.

Install the clutch slave cylinder.

- Attach the rubber grommet.
- Tighten to 10 Nm.

2. Install the manual transmission.
For additional information, refer to: Transaxle - 2.0L Duratorq-TDCi (308-03 Manual Transmission/Transaxle, Installation) / Transaxle - 2.0L NA V6 - AJV6/2.5L NA V6 - AJV6/3.0L NA V6 - AJ27 (308-03 Manual Transmission/Transaxle, Installation).

3. Bleed the hydraulic clutch system.
For additional information, refer to: Clutch System Bleeding - Vehicles With: 5-Speed Manual Transmission - MT75 (308-00 Manual Transmission/Transaxle and Clutch - General Information, General Procedures).

Clutch Controls - Clutch Slave CylinderVehicles With: 6-Speed Manual Transaxle - MMT6

Removal and Installation

Removal

1. NOTE: The clutch slave cylinder assembly must be replaced whenever it is removed.

Remove the manual transmission.
For additional information, refer to: Transaxle - 2.2L Duratorq-TDCi (110kW/150PS) - Puma (308-03 Manual Transmission/Transaxle, Removal).

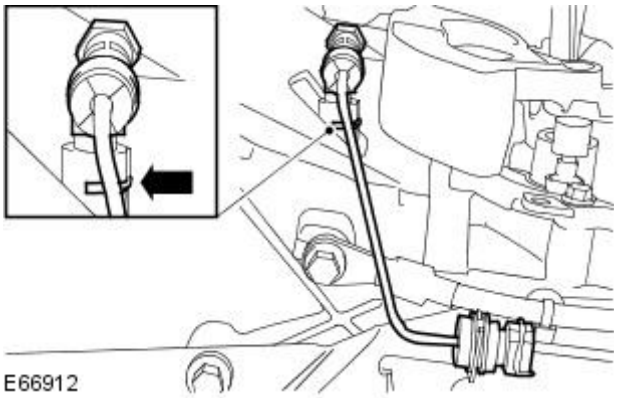

2. WARNING: Do not allow brake fluid to contact the skin or eyes. If brake fluid comes into contact with the skin or eyes, rinse the affected areas immediately with water. Failure to follow this instructions can result in personal injury.

CAUTION: Brake fluid will escape when the lines are disconnected.

Remove the clutch slave cylinder high pressure pipe from the retaining bracket and clutch slave cylinder bleed union.

- Release the retaining clip.

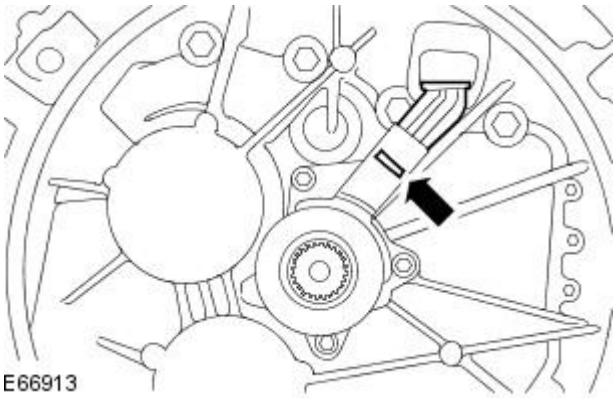

3. CAUTION: Brake fluid will escape when the lines are disconnected.

Remove the clutch slave cylinder bleed union.

- Release the retaining clip.

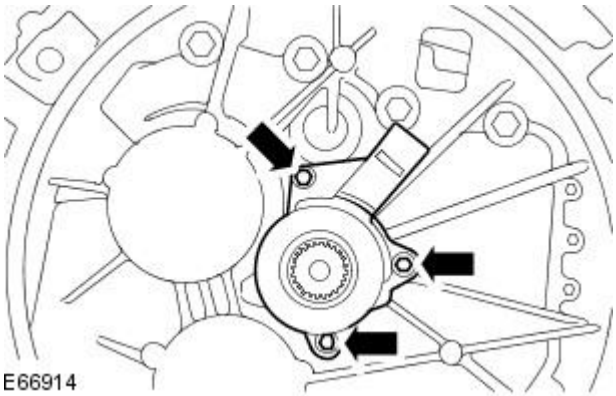

4. CAUTION: Brake fluid will escape when the lines are disconnected.

Remove the clutch slave cylinder.

Installation

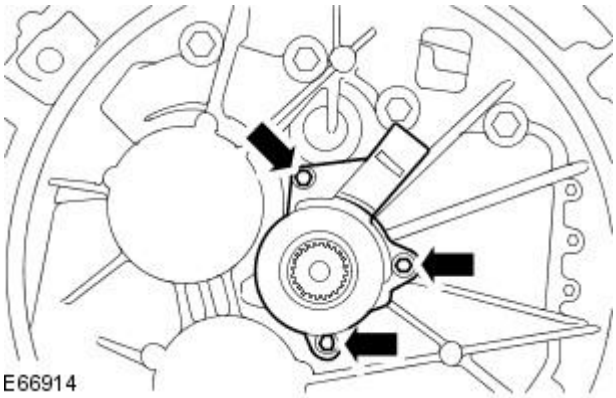

1. NOTE: Apply suitable tape to the input shaft to protect the slave cylinder seal from damage. Remove the tape when the slave cylinder is installed.

• NOTE: Apply sealer to the mating faces of the clutch slave cylinder and the transmission housing.

Install the clutch slave cylinder.

- Tighten to 10 Nm.

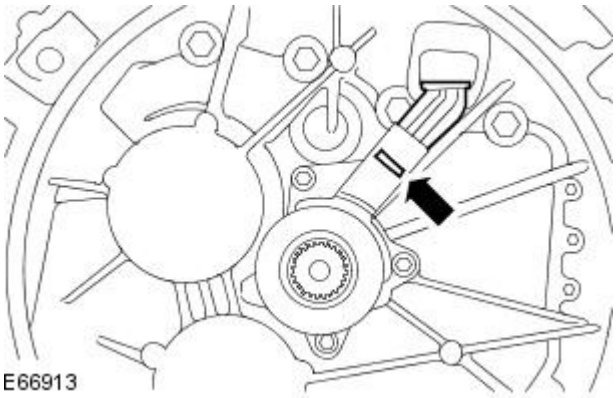

2. Install the clutch slave cylinder bleed union.
   - Fully seat the retaining clip.

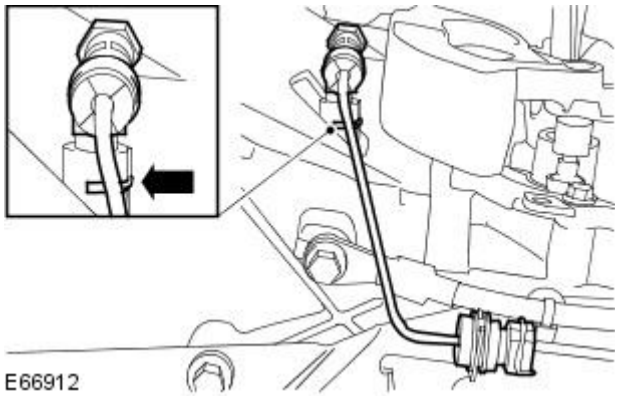

3. Install the clutch slave cylinder high pressure pipe to the retaining bracket and clutch slave cylinder bleed union.
   - Fully seat the retaining clip.

4. Install the manual transmission.
   For additional information, refer to: Transaxle - 2.2L Duratorq-TDCi (110kW/150PS) - Puma (308-03 Manual Transmission/Transaxle, Installation).

5. Bleed the hydraulic clutch system.
   For additional information, refer to: Clutch System Bleeding - Vehicles With: 6-Speed Manual Transaxle - MMT6 (308-00 Manual Transmission/Transaxle and Clutch - General Information, General Procedures).

Manual Transmission / Transaxle -

Lubricants, Fluids, Sealers and Adhesives

Description	Specification
Manual transaxle fluid	WSD-M2C200-C

Capacities

Description	Quantity
Manual transmission fluid	1.75 Liters or 0 - 5 mm (0 - 0.20 in) below the lower edge of the fill plug bore

Torque Specifications

Description	Nm	lb-ft	lb-in
Transaxle retaining bolts	48	35	-
Reversing lamp switch	20	15	-
Starter motor retaining bolts - vehicles with 2.0L, 2.5L and 3.0L engine	35	26	-
Transaxle mount retaining bolt and studs	80	59	-
Transaxle mount retaining nut	133	98	-
Transaxle drain plug	45	33	-
Transaxle fill plug	45	33	-
Starter motor retaining bolts - vehicles with diesel engine	25	18	-
Starter motor electrical connector retaining nut	12	9	-
Starter motor solenoid electrical connector retaining nut	6	-	53
Intake manifold support bracket retaining bolts	10	-	89
Gearshift cable support bracket retaining nuts	25	18	-
Air cleaner mount bracket retaining nuts and bolt - vehicles with 2.0L, 2.5L and 3.0L engine	6	-	53
Left-hand driveshaft retaining nuts - vehicles with 2.0L or diesel engine	25	18	-
Vacuum solenoids and vacuum reservoir mount bracket retaining bolts - vehicles with diesel engine	23	17	-
Shock absorber and spring assembly securing nuts	25	18	-
Wiring harness to camshaft cover retaining stud, retaining nut	6	-	53
Engine cover rear mount bracket retaining bolts - vehicles with diesel engine	23	17	-
Charge air cooler pipe	4	-	35

Manual Transmission / Transaxle - Manual TransaxleVehicles With: 5-Speed Manual Transmission - MT75

Description and Operation

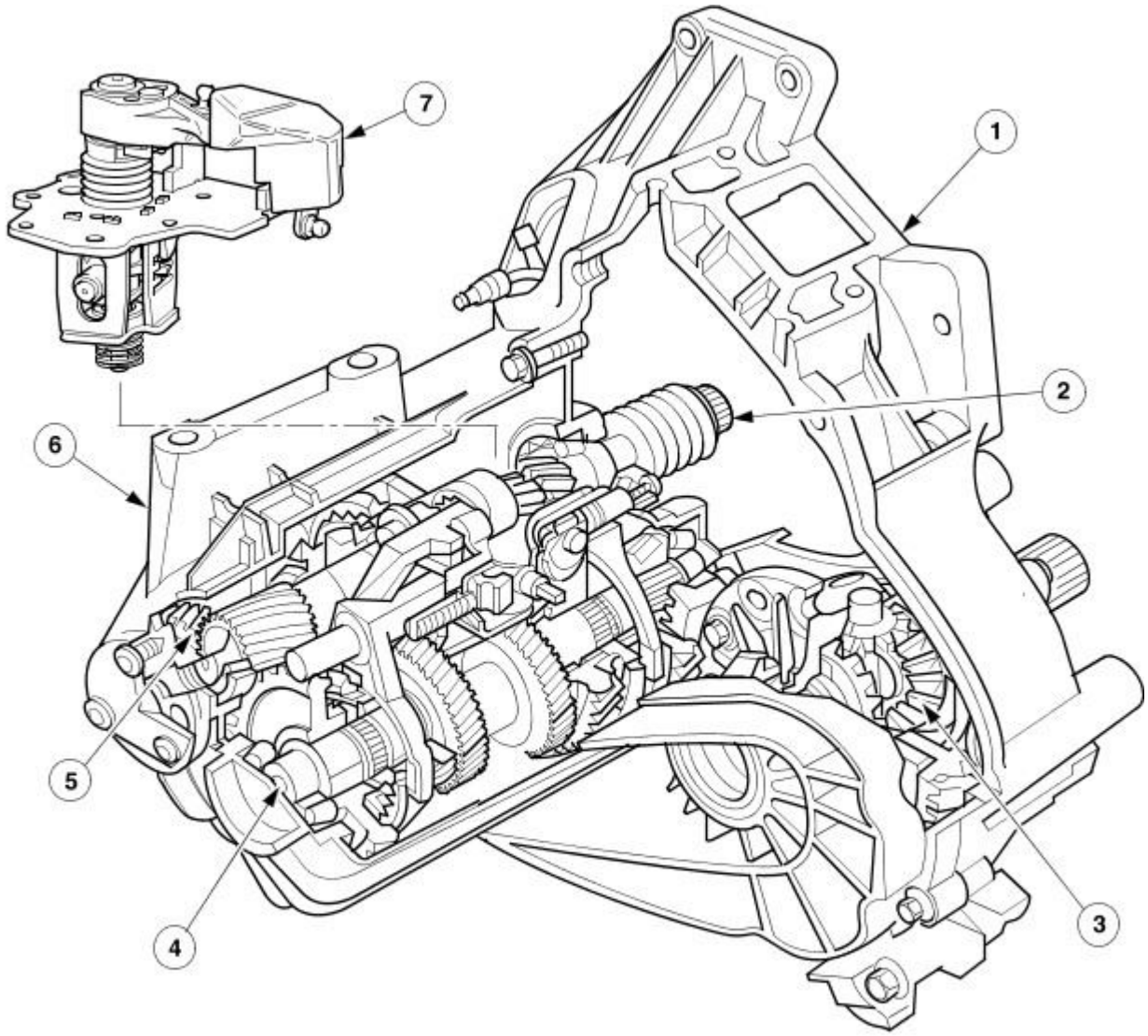

VUJ0004405

Item	Part Number	Description
1	—	Transaxle housing - clutch side
2	—	Input shaft
3	—	Differential
4	—	Output shaft
5	—	Reverse gear idler
6	—	Transaxle housing
7	—	Selector mechanism

The MTX 75 manual transaxle is a 2-shaft transaxle.

MTX 75 means:

- M = Manual
- T = Transmission
- X = Transaxle (front wheel drive)
- 75 = The distance from the input and output shafts in mm

The aluminium housing consists of two closed sections. The reinforced ribs on the transaxle housing are to reduce the noise and vibration. With the '2-shaft transaxle' all the gear wheels are in permanent mesh. In each gear the required ratio is achieved by means of a pair of geared wheels. When reverse is selected, an idler gear changes the direction of rotation of the output. The input and output shafts run taper roller bearings. To further improve stability and gear shifting, a maintenance free cable operating mechanism is used. all gear wheels, including reverse gear, are beveled cut, synchronized and run on needle roller bearings 1st, 2nd, 3rd, gear have doubled synchronization.

The engine rotational torque is transmitted from the crankshaft through the clutch to the transaxle input shaft, which then transmits drive to the output shaft by utilizing an arrangement of gears. When reverse gear is selected, the direction of the output shaft is changed by an idler gear assembly.

In neutral, none of the gears are connected to the input or output shaft through the relevant synchronizer unit. No torque is transmitted to the differential.

Published: 11-May-2011

Manual Transmission / Transaxle - Manual TransaxleVehicles With: 6-Speed Manual Transaxle - MMT6

Description and Operation

This vehicle is equipped with a transversely mounted manual transaxle, which combines both the transmission and differential in one unit.

The transaxle is a 6-speed, 3-shaft design with all pairs of gears in continuous mesh.

Each forward gear ratio is produced through a pair of dedicated gears, with the exception of 4th and 6th gears which share the same input shaft gear.

All gear wheels rotate on needle-roller bearings, and are helical-cut, this type of gearing enables a higher gear contact ratio, which mesh with minimum rolling noise; resulting in a quiet transaxle operation.

Torque is transmitted from the selected output shaft to the differential, which transmits the torque to the halfshafts to drive the front wheels. With neutral selected, the gears are not connected via the synchronizers to the output shafts, therefore no torque is transmitted to the differential.

The aluminum transaxle housing consists of two sections, reinforced by a web of strengthening ribs. The ribs also serve to reduce noise and vibration, and aid the cooling of the transaxle.

Gear Train

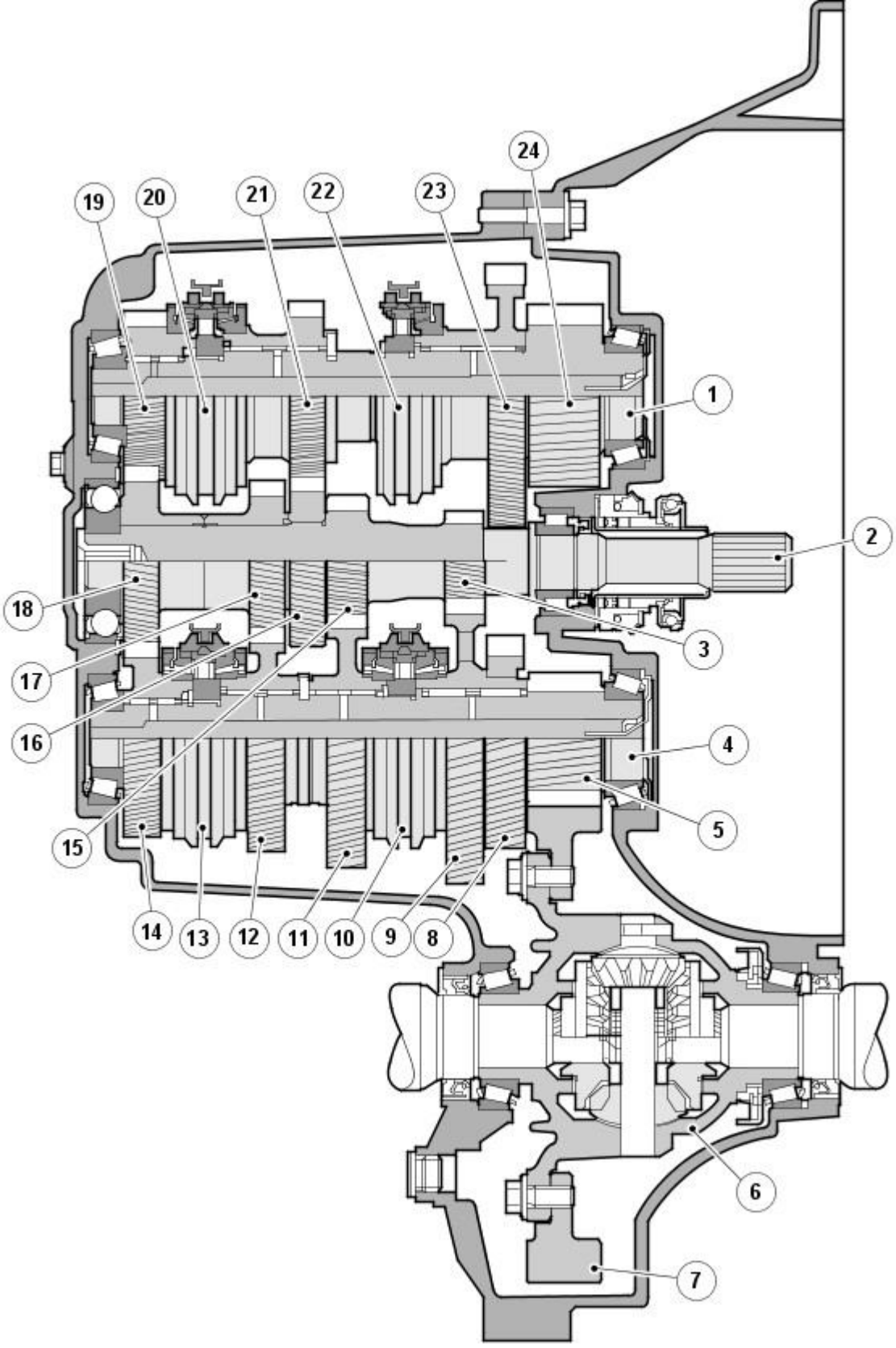

Item	Description	Item	Description
1	Output shaft — 5th/6th and reverse gears	13	Synchronizer assembly – 3rd/4th gear
2	Input shaft	14	4th gear wheel
3	1st gear wheel	15	2nd gear wheel
4	Output shaft — 1st to 4th gears	16	5th gear wheel
5	Pinion	17	3rd gear wheel
6	Differential assembly	18	4th/6th gear wheel
7	Crown wheel	19	6th gear wheel
8	Reverse idler gear	20	Synchronizer assembly – 5th/6th gear
9	1st gear wheel	21	5th gear wheel
10	Synchronizer assembly – 1st/2nd gear	22	Synchronizer assembly — reverse gear
11	2nd gear wheel	23	Reverse gear wheel
12	3rd gear wheel	24	Pinion

Shafts and Selector Mechanism

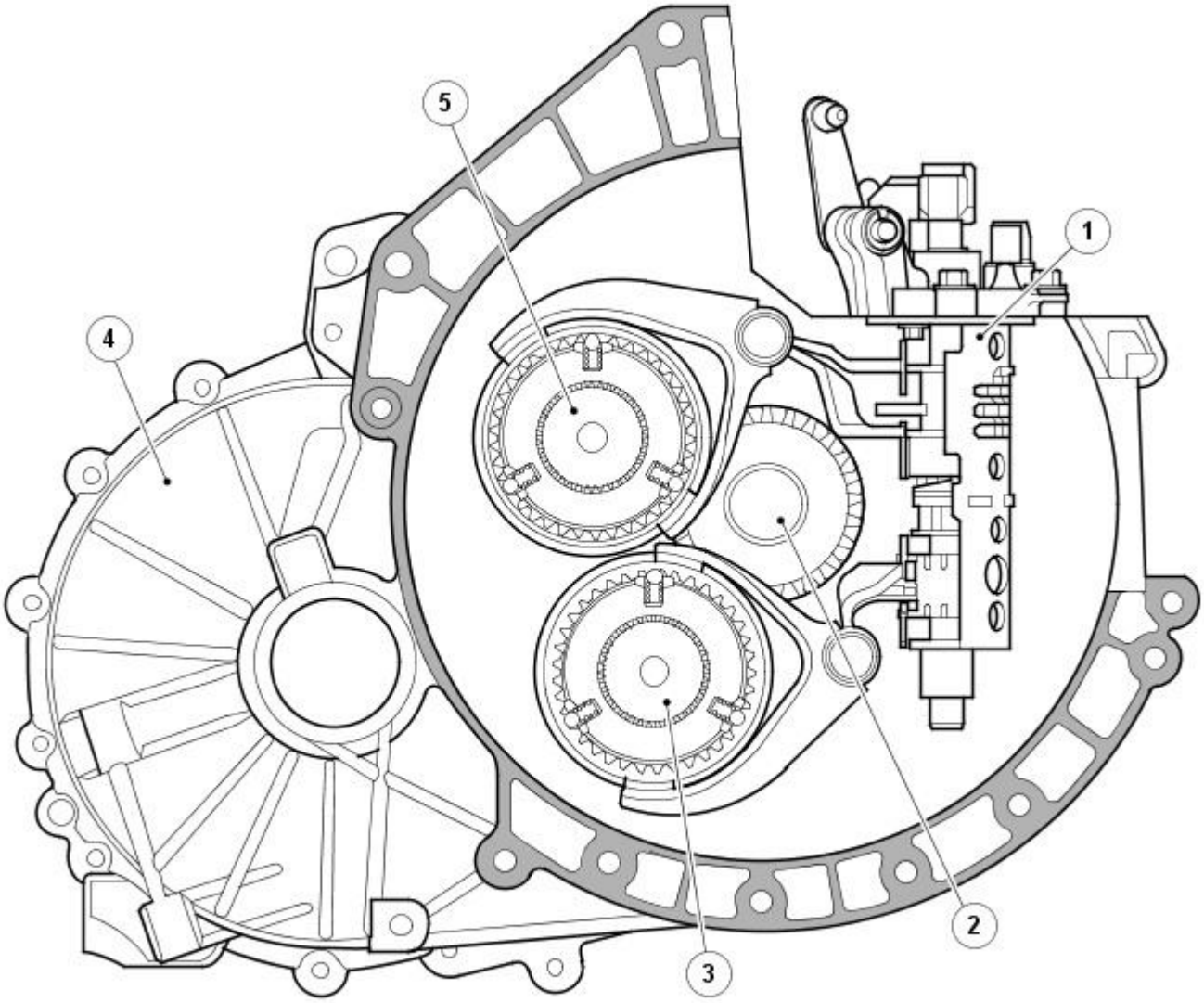

E 67474

Item	Description
1	Selector mechanism
2	Input shaft
3	Output shaft — 1st to 4th gears
4	Differential housing
5	Output shaft — 5th/6th and reverse gears

Input Shaft

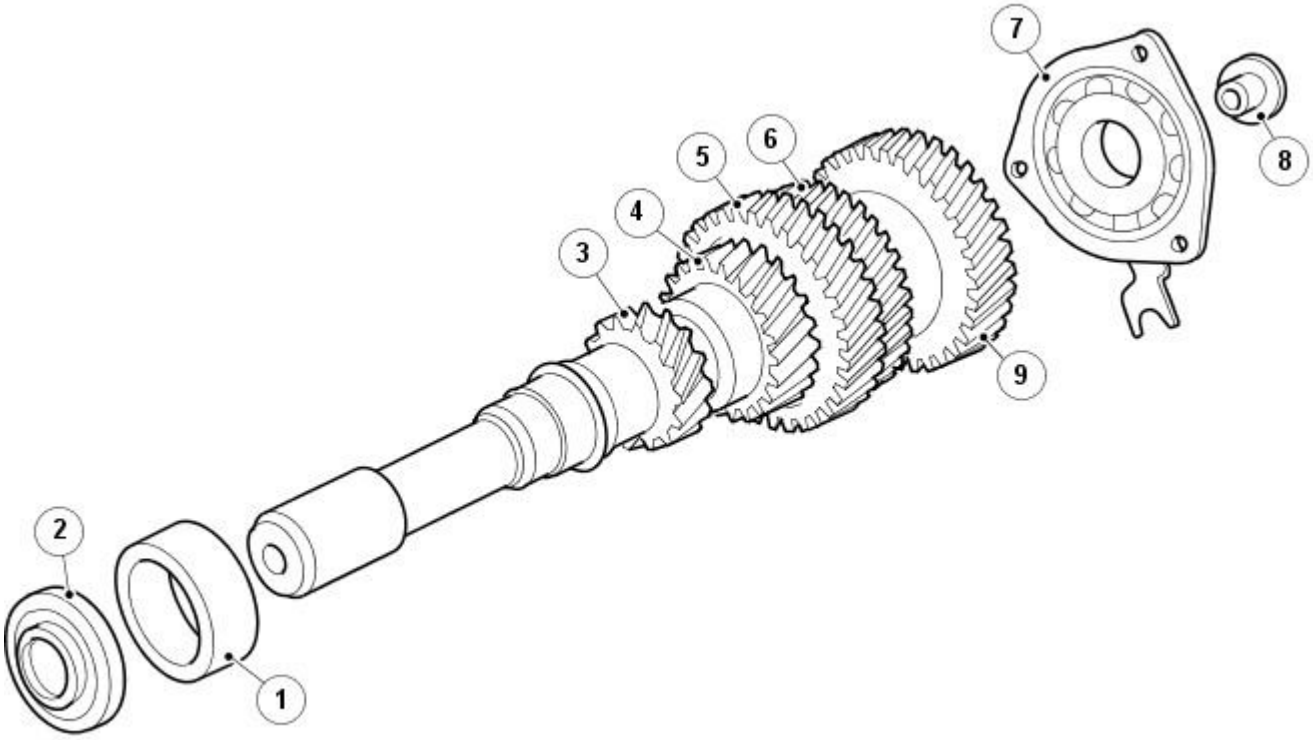

E67475

Item	Description	Item	Description
1	Clutch housing roller bearing	6	3rd gear wheel
2	Oil seal	7	Bearing retainer
3	1st gear wheel	8	Bearing retaining screw
4	2nd gear wheel	9	4th/6th gear wheel
5	5th gear wheel		

The input-shaft is a solid unit, which rotates:

- in a ball-bearing at the clutch-housing-end of the transaxle, and
- a roller bearing at the rear of the transaxle,
- due to this mounting arrangement, the bearings do not require preload adjustment on assembly.

- 1st and 2nd gear wheels are an integral part of the input shaft.
- 3rd and 5th gear wheels and 4th/6th gear wheel are pressed onto the input shaft.

Output Shaft 1st to 4th Gears

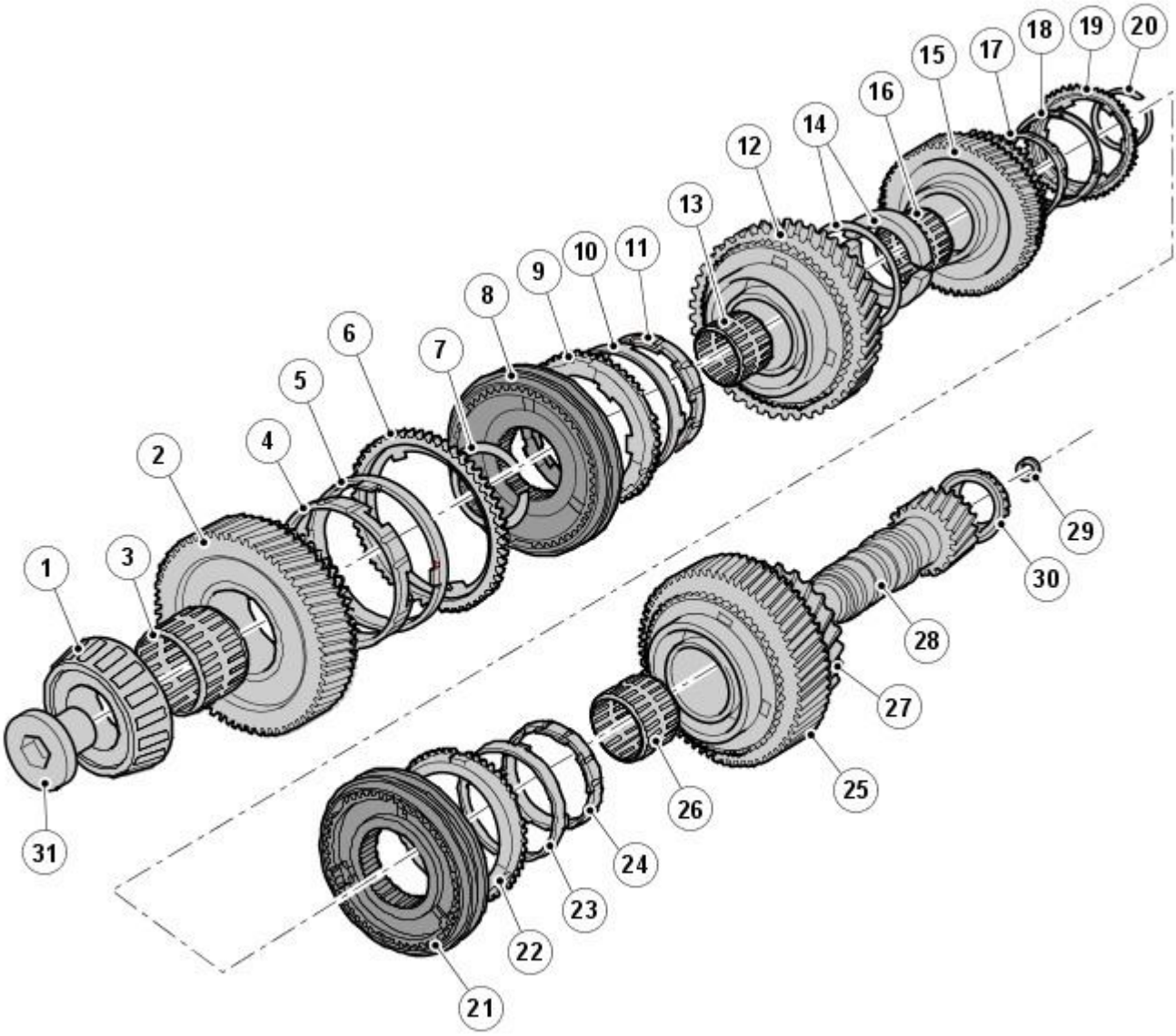

E67476

Item	Description	Item	Description
1	Taper roller bearing, transmission housing	17	Inner synchronizer ring
2	4th gear wheel	18	2nd gear synchronizer cone
3	Needle bearing	19	Outer synchronizer ring - 2nd gear
4	Inner synchronizer ring	20	Snap ring
5	4th gear synchronizer cone	21	Synchronizer assembly - 1st/2nd gear
6	Outer synchronizer ring - 4th gear	22	Outer synchronizer ring - 1st gear
7	Snap ring	23	1st gear synchronizer cone
8	Synchronizer assembly - 3rd/4th gear	24	Inner synchronizer ring
9	Outer synchronizer ring - 3rd gear	25	1st gear wheel
10	3rd gear synchronizer cone	26	Needle bearing
11	Inner synchronizer ring	27	Reverse idler gear
12	3rd gear wheel	28	Output shaft 1st/4th gear
13	Needle bearing	29	Oil collector ring
14	Thrust washers	30	Taper roller bearing, clutch housing
15	2nd gear wheel	31	Bearing retaining bolt (left-hand thread)
16	Needle bearing		

The 1st to 4th gear output shaft is a hollow unit, which rotates in tapered roller-bearings; this arrangement requires adjustment of the bearing's preload on assembly.

The output pinion is an integral part of the output shaft. The synchronizer assemblies of the 1st, 2nd, and 3rd, 4th gears are located on the output shaft.

Internal oil-ways in the output shaft provide lubrication to the gear wheel's needle-roller bearings and synchronizer assemblies.

An integrated oil-collector ring and oil-thrower, located on the clutch-housing-end of the output shaft, guides the transmission oil into the oilway of the output shaft.

Output Shaft — 5th / 6th and Reverse Gears

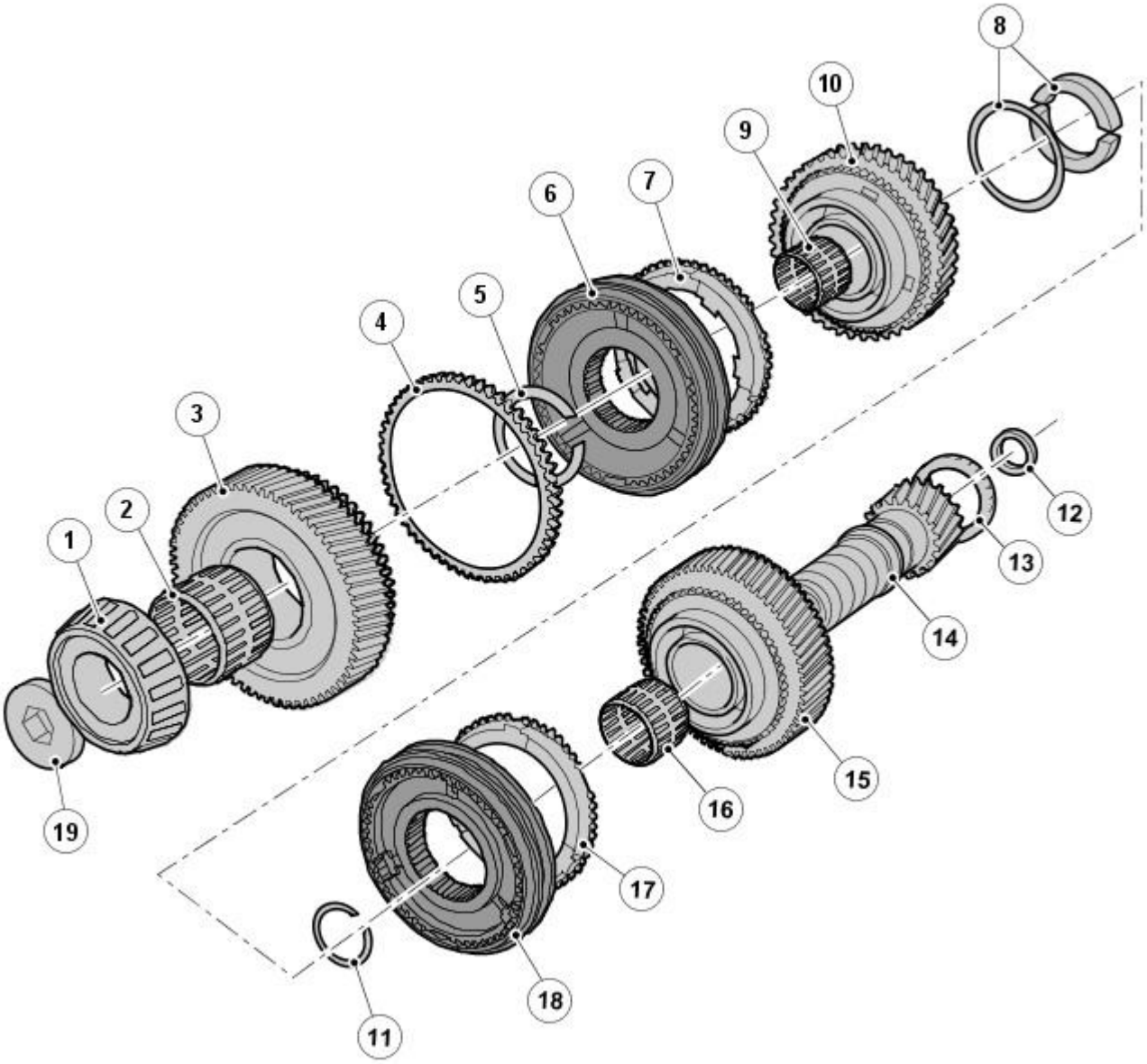

E67477

Item	Description	Item	Description
1	Transmission housing taper roller bearing	11	Snap ring
2	Needle bearing	12	Oil collector ring
3	6th gear wheel	13	Taper roller bearing, clutch housing
4	6th gear synchronizer ring	14	Output shaft 5th/6th/reverse gear
5	Snap ring	15	Reverse gear wheel
6	Synchronizer assembly - 5th/6th gear	16	Needle bearing
7	5th gear synchronizer ring	17	Reverse gear synchronizer ring
8	Thrust washers	18	Synchronizer assembly — reverse gear
9	Needle bearing	19	Bearing retaining bolt (left-hand thread)
10	5th gear wheel		

The 5th/6th and reverse gear output shaft is a hollow unit, which rotates in tapered roller-bearings; this arrangement requires adjustment of the bearing's preload on assembly.

The output pinion is an integral part of the output shaft.

The synchronizer assemblies of the 5th/6th and reverse gears are located on the output shaft.

Internal oil-ways in the output shaft provide lubrication to the gear wheel's needle-roller bearings and synchronizer assemblies.

An integrated oil-collector ring and oil-thrower, located on the clutch-housing-end of the output shaft, guides the transmission oil into the oilway of the output shaft.

Synchronizer Assemblies

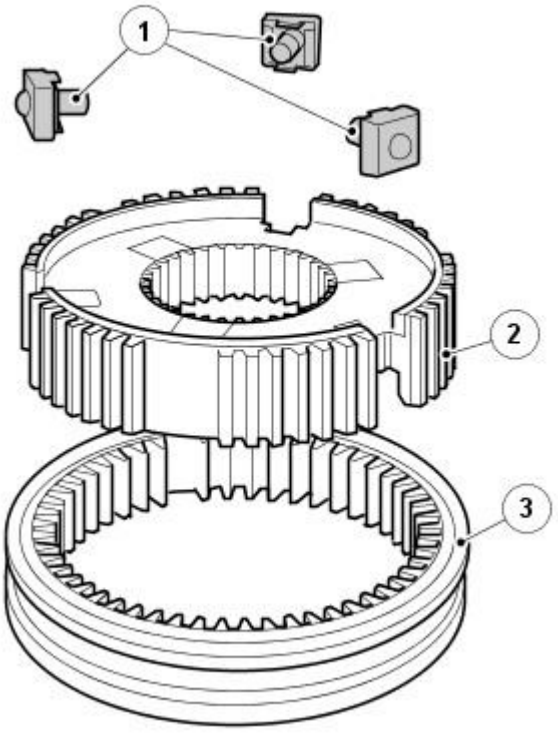

E67478

Item	Description
1	Sliding block assembly
2	Synchronizer hub
3	Sliding collar

The gears 1st, 2nd, 3rd and 4th have double cone synchronizers, 5th, 6th and reverse gears have single cone synchronizers.

The detent balls, springs and sliding blocks form one unit, this arrangement aids an easier assembly of the synchronizer.

Differential Assembly

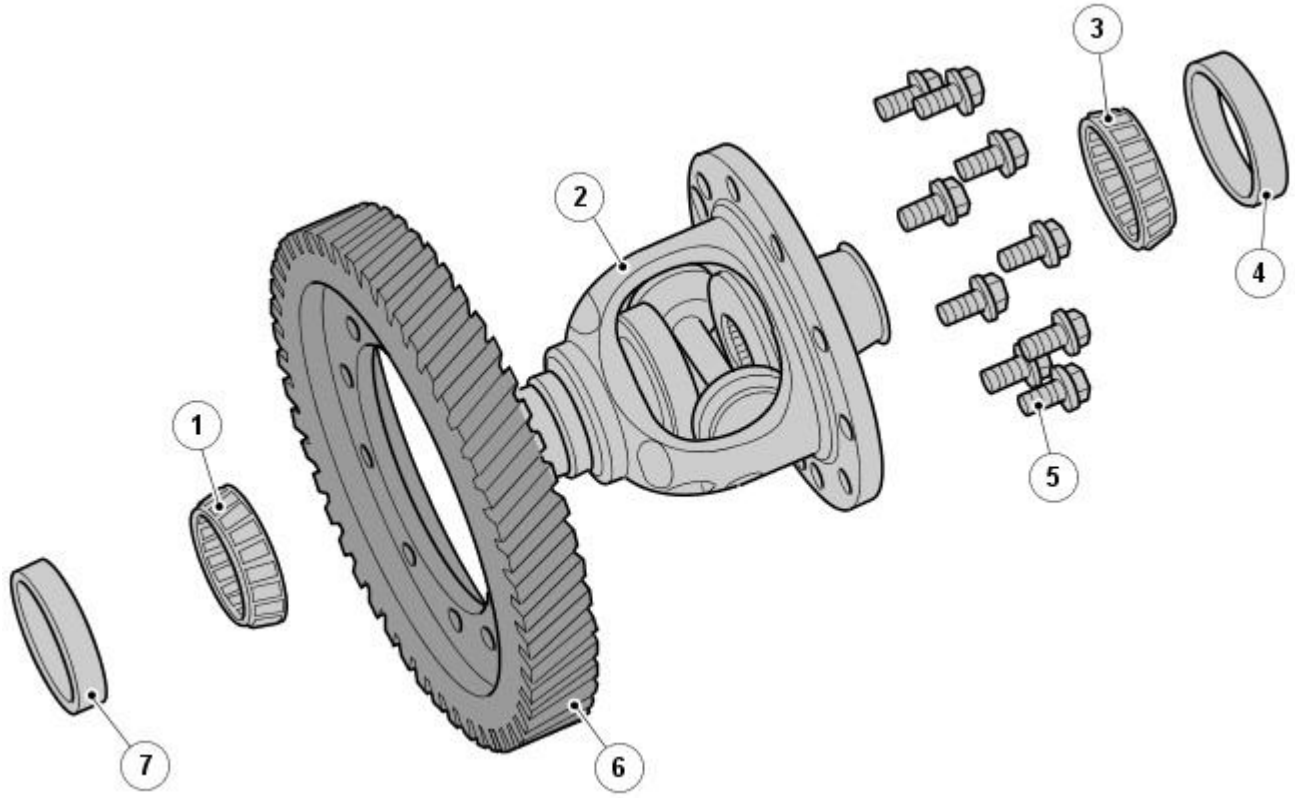

E67481

Item	Description	Item	Description
1	Taper roller bearing, transmission housing	5	Crown wheel bolts
2	Differential assembly	6	Crown wheel
3	Taper roller bearing, clutch housing	7	Bearing shell, taper roller bearing
4	Bearing shell, taper roller bearing		

The differential is identical to that used in the 5 speed transmission, with the exception of the vehicle speed sensor, which has been deleted along with the sender wheel. Vehicle speed sensing is provided by the wheel-speed sensors.

The differential is mounted on taper-roller bearings, this arrangement requires adjustment of the bearing's preload on assembly.

Gear Selection Power Flow

• NOTE: The position of the transaxle shafts has been altered for clarity.

The following diagrams show a schematic representation of the power-flow through transaxle for each gear selection. The power flow is transmitted through the positively engaged pair of gears onto the output pinion of the relevant output shaft and then to the crown wheel of the differential.

First Gear

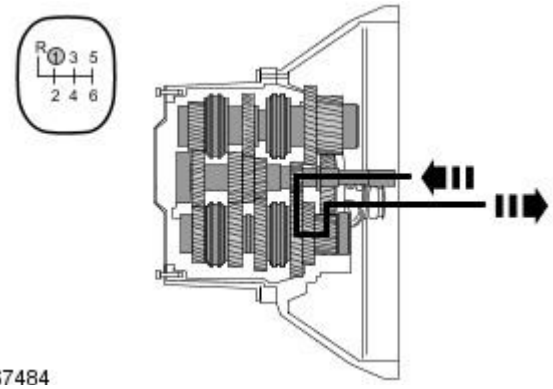

E67484

The 1st gear-wheel on the input shaft is positively connected to the 1st gear-wheel on the output shaft by the 1st/2nd gear synchronizer.

Second Gear

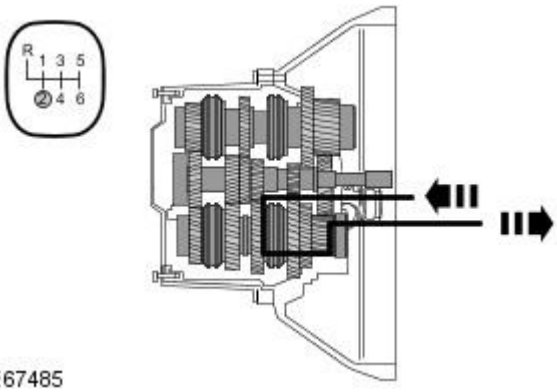

E67485

The 2nd gear-wheel on the input shaft is positively connected to the 2nd gear-wheel on the output shaft by the 1st/2nd gear synchronizer.

Third Gear

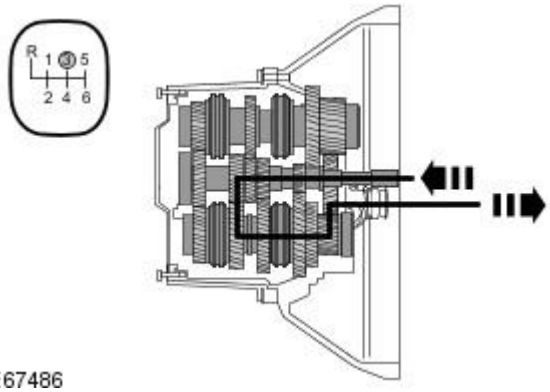

E67486

The 3rd gear-wheel on the input shaft is positively connected to the 3rd gear-wheel on the output shaft by the 3rd/4th gear synchronizer.

Fourth Gear

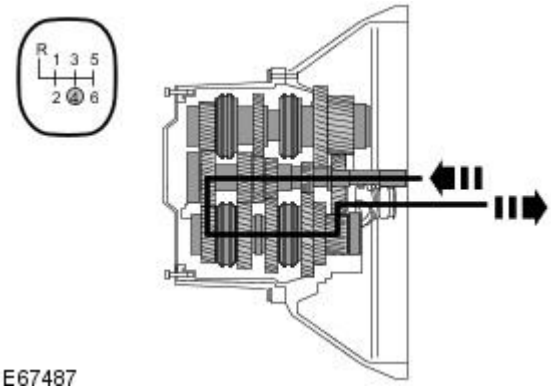

E67487

The 4th/6th gear-wheel on the input shaft is positively connected to the 4th gear-wheel on the output shaft by the 3rd/4th gear synchronizer.

Fifth Gear

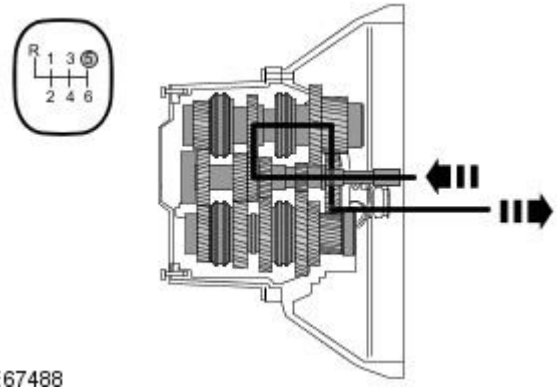

The 5th gear-wheel on the input shaft is positively connected to the 5th gear-wheel on the output shaft by the 5th/6th gear synchronizer.

Sixth Gear

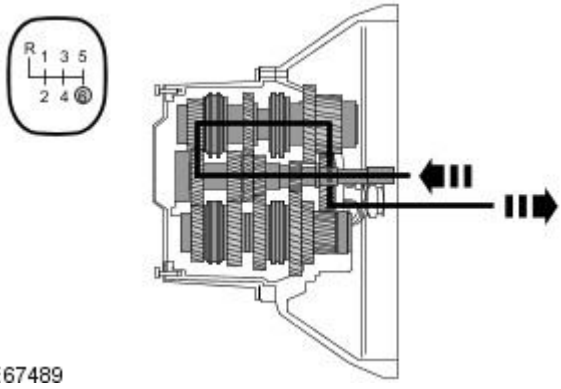

The 4th/6th gear-wheel on the input shaft is positively connected to the 6th gear-wheel on the output shaft by the 5th/6th gear synchronizer.

Reverse Gear

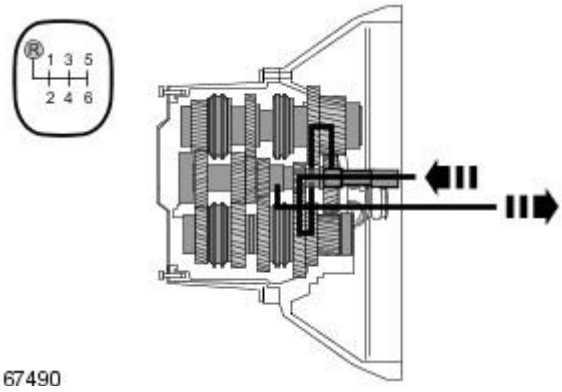

• NOTE: The reverse idler-gear in turn transmits the drive to the reverse gear on the opposite output shaft.

The reverse gear synchronizer, transfers drive from the 1st gear-wheel on the input shaft, to the 1st gear-wheel on the output shaft, which is fixed to the reverse idler-gear.

Internal Selector Mechanism

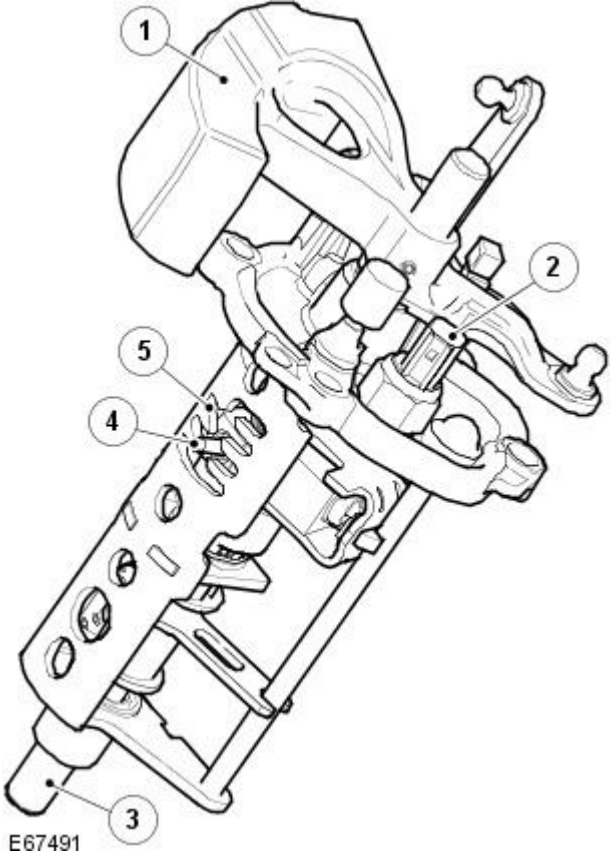

Item	Description
1	Counterbalance
2	Reverse gear switch
3	Selector shaft
4	Selector finger
5	Selector gate

The selector interlock mechanism and selector finger are mounted on a sleeve in the selector mechanism housing. A spring-loaded ball maintains the engagement of the selected gear. A counterbalance weight dampens the synchronized shift resistance of gear selection to provide a smooth gear change operation.

The reverse lamp switch is mounted on the housing's cover.

Published: 11-May-2011

Manual Transmission / Transaxle - Manual Transaxle

Diagnosis and Testing

For additional information, refer to Section 308-00 Manual Transmission/Transaxle and Clutch - General Information

Manual Transmission / Transaxle - Transaxle Draining and FillingVehicles With: 5-Speed Manual Transmission - MT75

General Procedures

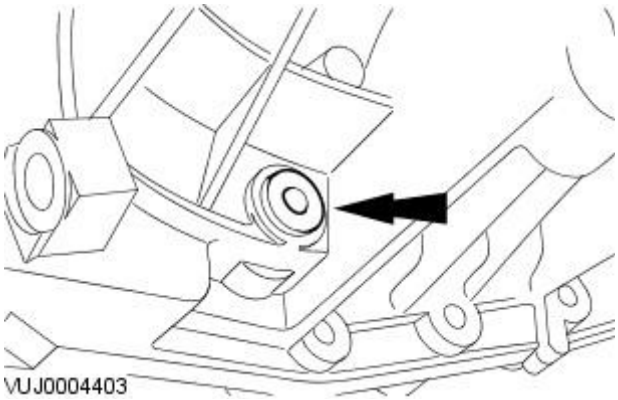

1. Raise and support the vehicle. For additional information, refer toSection 100-02 Jacking and Lifting
2. Remove the drain plug.

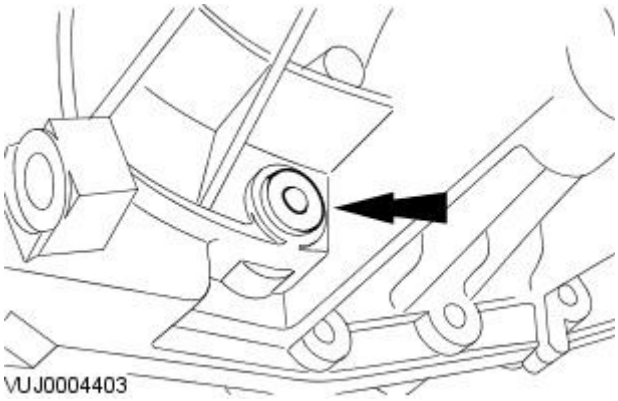

3. Install the drain plug.

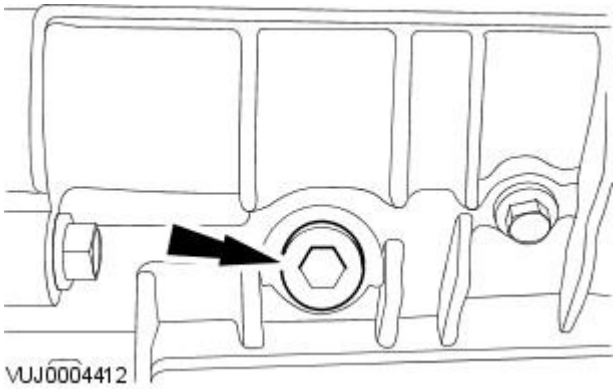

4. Remove the fill plug.

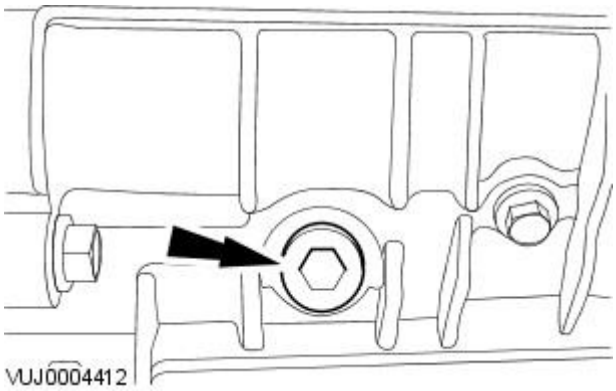

5. Fill the transaxle to 0.5 mm (0.02 in) below the lower edge of the fill plug bore.
6. Install the fill plug.
   - Tighten to 45 Nm.
7. Lower the vehicle.

Manual Transmission / Transaxle - Transaxle Draining and FillingVehicles With: 6-Speed Manual Transaxle - MMT6

General Procedures

1. Raise and support the vehicle.
   For additional information, refer to: Lifting (100-02 Jacking and Lifting, Description and Operation).
2. Remove the drain plug and drain the fluid into a suitable container

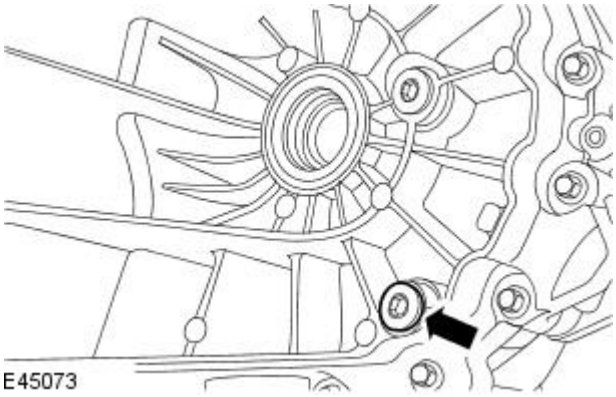

3. Install the drain plug.
   - Tighten to 35 Nm.

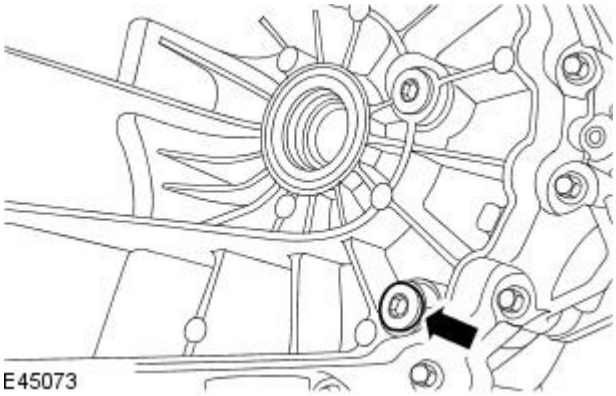

4. Remove the fill plug.

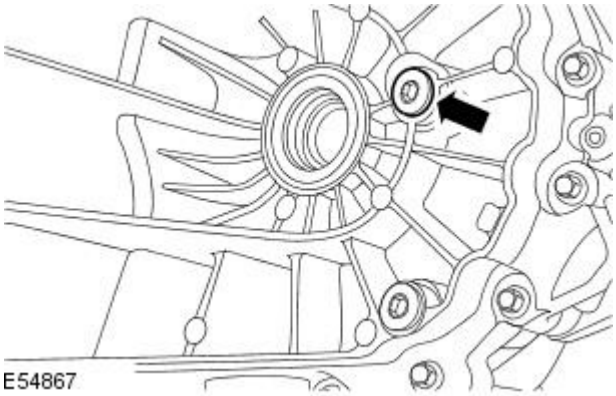

5. Fill the transaxle to 0 - 5 mm (0 - 0.20 in) below the lower edge of the fill plug bore.
6. Install the fill plug.
   - Tighten to 35 Nm.

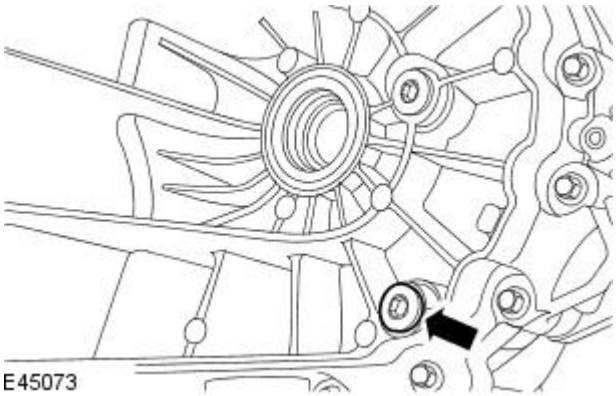

7. Lower the vehicle.

Manual Transmission / Transaxle - Halfshaft Seal LH

In-vehicle Repair

Special Tool(s)	
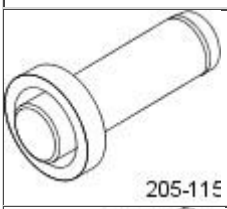	Link shaft oil seal installer 205-115
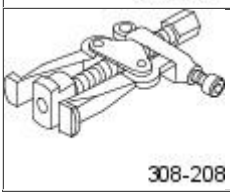	Pinion oil seal remover 308-208

Removal

1. Drain the transmission.
   For additional information, refer to: Transaxle Draining and Filling - Vehicles With: 5-Speed Manual Transmission - MT75 (308-03 Manual Transmission/Transaxle, General Procedures) / Transaxle Draining and Filling - Vehicles With: 6-Speed Manual Transaxle - MMT6 (308-03 Manual Transmission/Transaxle, General Procedures).
2. Remove the left-hand halfshaft.
   For additional information, refer to: Front Halfshaft LH (205-04 Front Drive Halfshafts, Removal and Installation).
3. Using the special tool, remove the halfshaft oil seal.

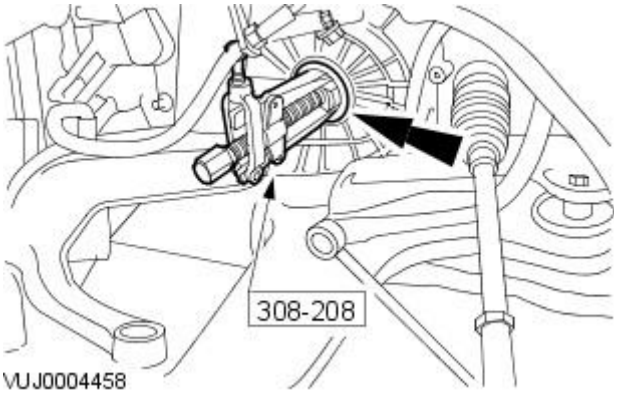

Installation

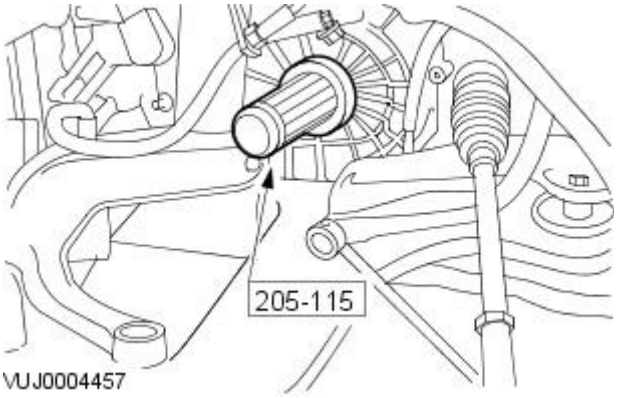

1. Using the special tool, install the halfshaft oil seal.
2. Install the left-hand halfshaft.
   For additional information, refer to: Front Halfshaft LH (205-04 Front Drive Halfshafts, Removal and Installation).
3. Refill the transmission.
   For additional information, refer to: Transaxle Draining and Filling - Vehicles With: 5-Speed Manual Transmission - MT75 (308-03 Manual Transmission/Transaxle, General Procedures) / Transaxle Draining and Filling - Vehicles With: 6-Speed Manual Transaxle - MMT6 (308-03 Manual Transmission/Transaxle, General Procedures).

Manual Transmission / Transaxle - Halfshaft Seal RH

In-vehicle Repair

Special Tool(s)	
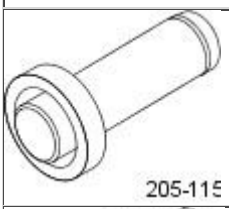	Link shaft oil seal installer 205-115
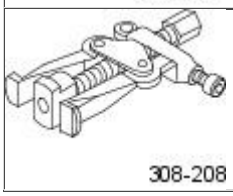	Pinion oil seal remover 308-208

1. Drain the transmission.
   For additional information, refer to: Transaxle Draining and Filling - Vehicles With: 5-Speed Manual Transmission - MT75 (308-03 Manual Transmission/Transaxle, General Procedures) / Transaxle Draining and Filling - Vehicles With: 6-Speed Manual Transaxle - MMT6 (308-03 Manual Transmission/Transaxle, General Procedures).
2. Remove the right-hand halfshaft.
   For additional information, refer to: Front Halfshaft RH - 2.0L NA V6 - AJV6/2.5L NA V6 - AJV6/3.0L NA V6 - AJ27 (205-04 Front Drive Halfshafts, Removal and Installation) / Front Halfshaft RH - 2.0L Duratorq-TDCi/2.2L Duratorq-TDCi (110kW/150PS) - Puma (205-04 Front Drive Halfshafts, Removal and Installation).

Removal

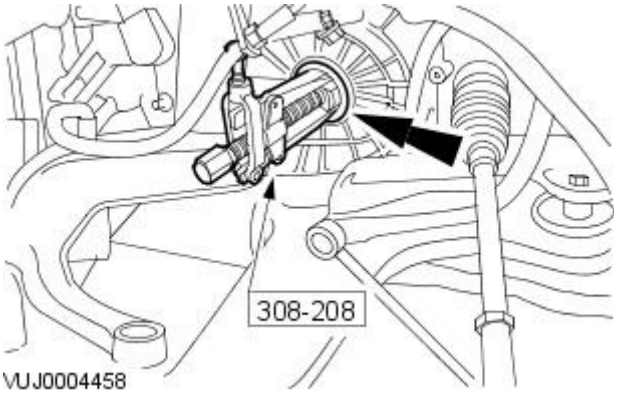

1. NOTE: Left-hand shown, right-hand similar.

   Using the special tool, remove the halfshaft oil seal.

Installation

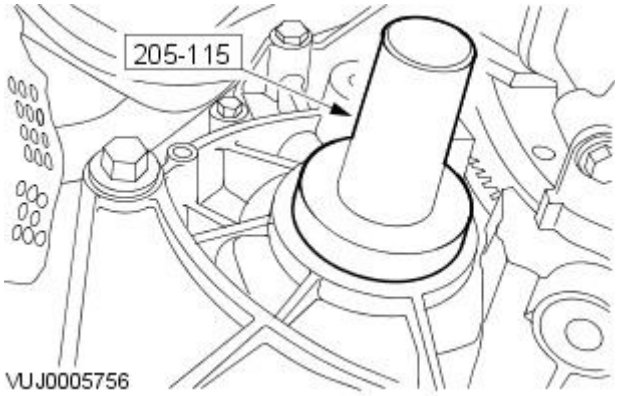

1. Using the special tool, install the halfshaft oil seal.
2. Install the right-hand halfshaft.
   For additional information, refer to: Front Halfshaft RH - 2.0L NA V6 - AJV6/2.5L NA V6 - AJV6/3.0L NA V6 - AJ27 (205-04 Front Drive Halfshafts, Removal and Installation) / Front Halfshaft RH - 2.0L Duratorq-TDCi/2.2L Duratorq-TDCi (110kW/150PS) - Puma (205-04 Front Drive Halfshafts, Removal and Installation).
3. Refill the transmission.
   For additional information, refer to: Transaxle Draining and Filling - Vehicles With: 5-Speed Manual Transmission - MT75 (308-03 Manual Transmission/Transaxle, General Procedures) / Transaxle Draining and Filling - Vehicles With: 6-Speed Manual

   Transaxle - MMT6 (308-03 Manual Transmission/Transaxle, General Procedures).

Manual Transmission / Transaxle - Input Shaft Seal

In-vehicle Repair

Removal

1. Remove the clutch slave cylinder.
   For additional information, refer to: Clutch Slave Cylinder - Vehicles With: 5-Speed Manual Transmission - MT75 (308-02 Clutch Controls, Removal and Installation) / Clutch Slave Cylinder - Vehicles With: 6-Speed Manual Transaxle - MMT6 (308-02 Clutch Controls, Removal and Installation).
   .

Installation

Vehicles with 5-speed manual transaxle

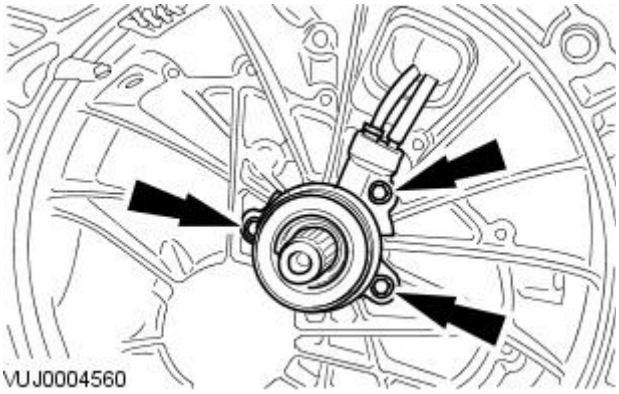

1. NOTE: Apply suitable tape to the input shaft to protect the slave cylinder seal from damage. Remove the tape when the slave cylinder is installed.

• NOTE: Apply sealer to the mating faces of the clutch slave cylinder and the transmission housing.

To install, reverse the removal procedure.

- Tighten to 10 Nm.

Vehicles with 6-speed manual transaxle

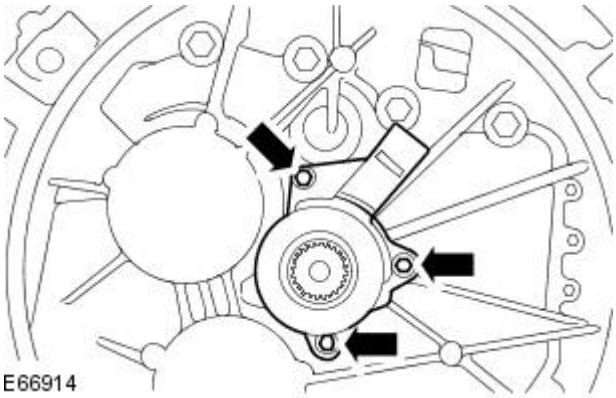

2. NOTE: Apply suitable tape to the input shaft to protect the slave cylinder seal from damage. Remove the tape when the slave cylinder is installed.

• NOTE: Apply sealer to the mating faces of the clutch slave cylinder and the transmission housing.

Tighten to 10 Nm.

Manual Transmission / Transaxle - Selector MechanismVehicles With: 5-Speed Manual Transmission - MT75

In-vehicle Repair

Special Tool(s)	
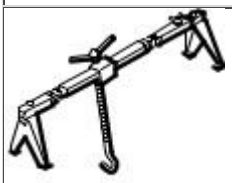 303-021	Engine Support Beam 303-021
E46047	Engine Support Brackets 303-1068
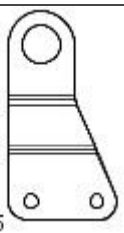 E44745	Engine lifting eye 303-1067
308436	Gearshift selector setting tool 308-436

Materials

Name	Specification
Gasket Eliminator Sealant	WSK-M2G348-A5

Removal

All vehicles

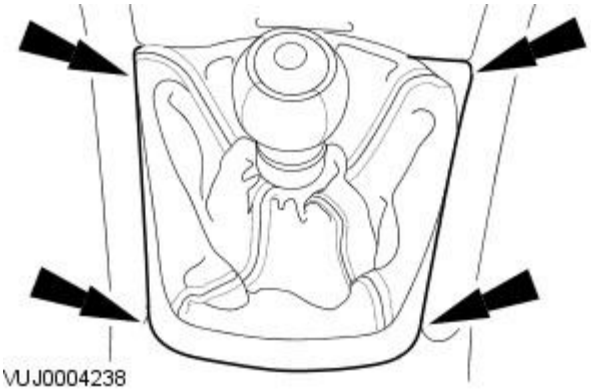

1. Detach the gearshift lever surround.

2. Remove the air cleaner. For additional information, refer to:

   Air Cleaner (303-12A Intake Air Distribution and Filtering - 2.0L NA V6 - AJV6/2.5L NA V6 - AJV6/3.0L NA V6 - AJ27, Removal and Installation),
   Air Cleaner (303-12B Intake Air Distribution and Filtering - 2.0L Duratorq-TDCi/2.2L Duratorq-TDCi (110kW/150PS) - Puma, Removal and Installation).

3. Remove the battery tray.
   For additional information, refer to: Battery Tray (414-01 Battery, Mounting and Cables, Removal and Installation).

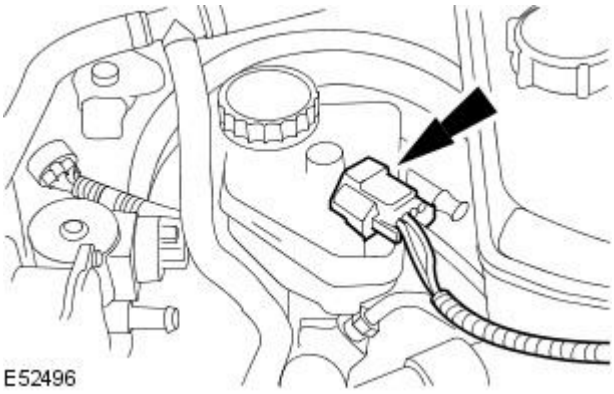

4. Disconnect the brake fluid low level warning indicator electrical connector.

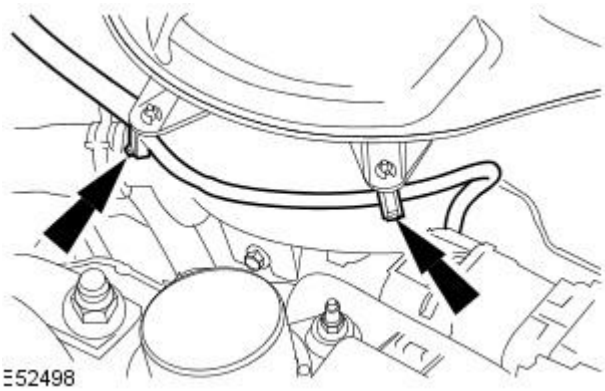

5. Detach the brake fluid low level warning indicator wiring harness from the coolant expansion tank.

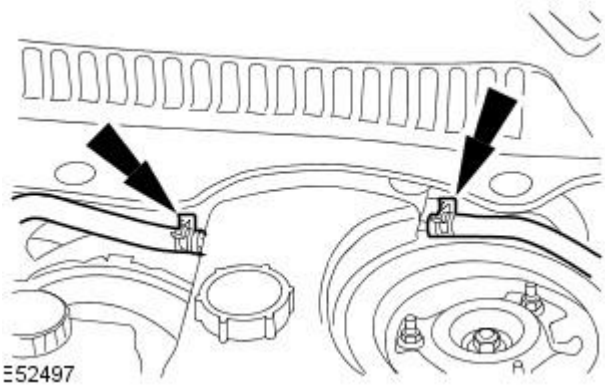

6. NOTE: Install blanking plugs to the cooling system vent hoses and the coolant expansion tank.

Detach the cooling system vent hoses from the coolant expansion tank.

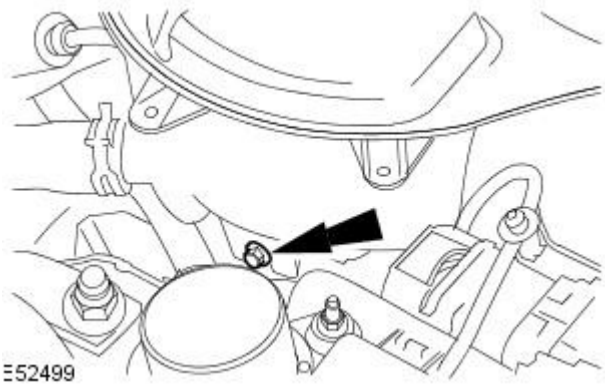

7. Remove the coolant expansion tank retaining bolt.

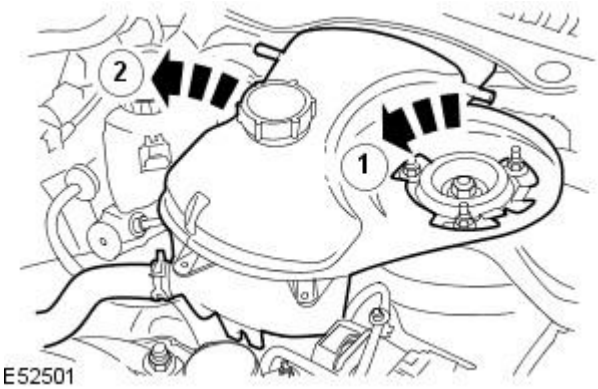

8. Reposition the coolant expansion tank.

1. Detach the coolant expansion tank.
2. Reposition the coolant expansion tank.

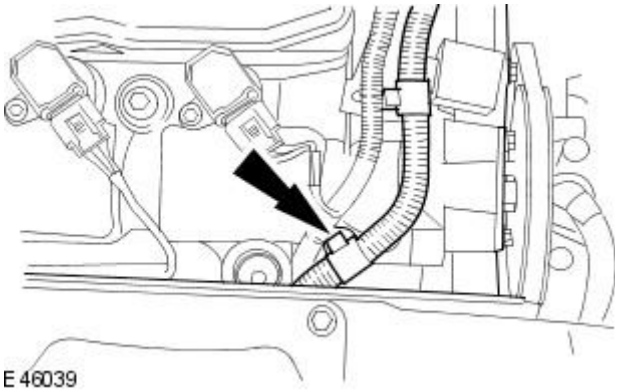

9. Detach the generator wiring harness retaining clip from the camshaft cover retaining clip.

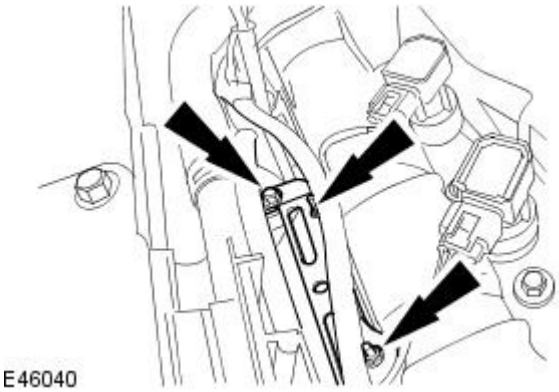

10. Remove the air cleaner mount bracket.

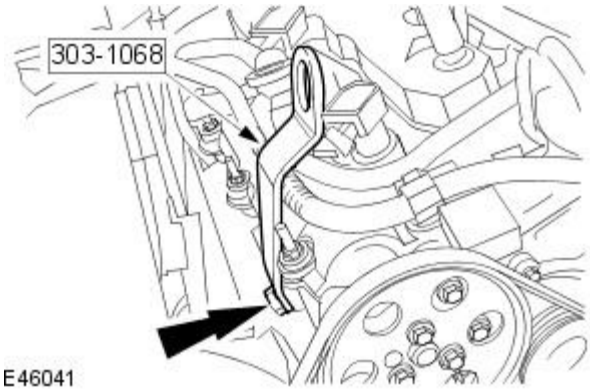

11. Install the special tool.

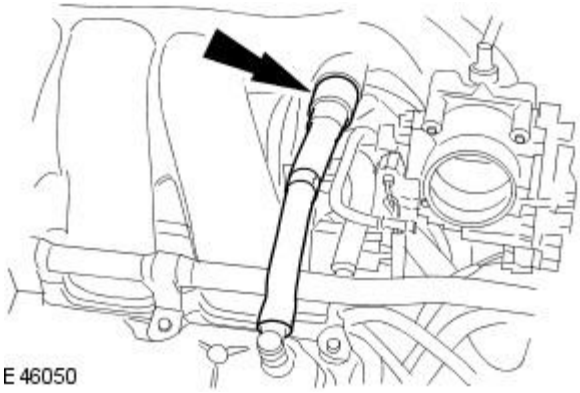

12. Detach the positive crankcase ventilation (PCV) hose from the intake manifold.

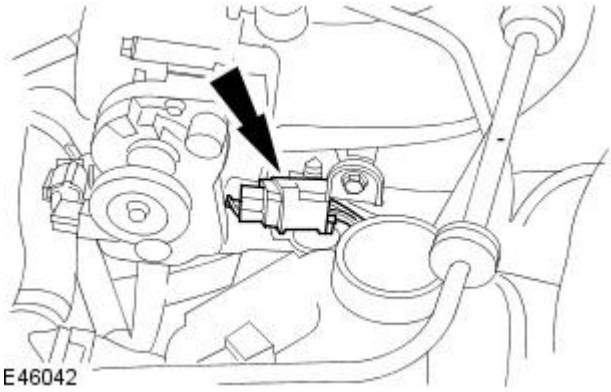

13. Detach the electrical connector from the intake manifold support bracket.

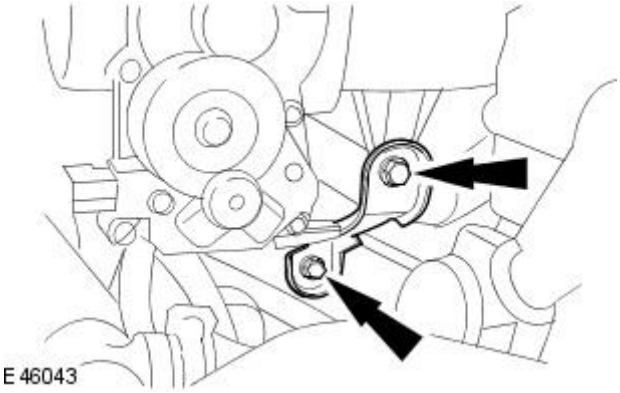

14. Remove the intake manifold support bracket.

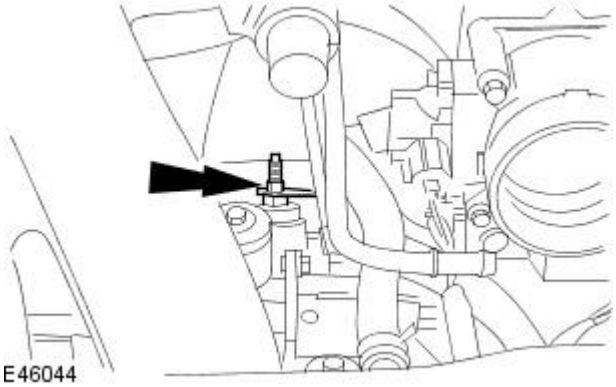

15. Detach the wiring harness from the camshaft cover retaining stud.

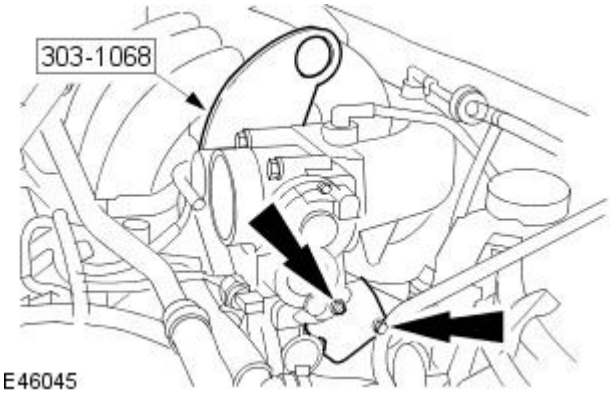

16. Install the special tool.

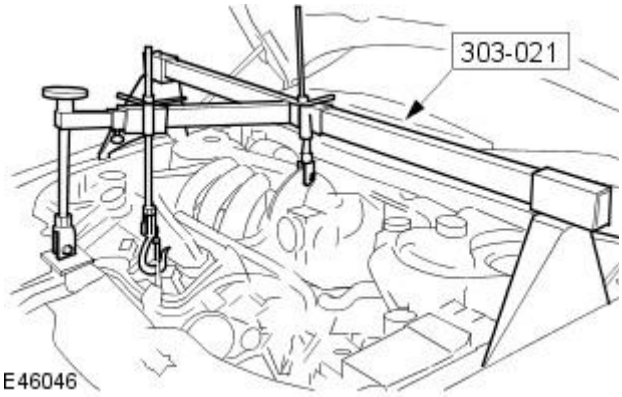

17. Install the special tool.

- Adjust the engine support bracket to support the weight of the powertrain assembly.

Vehicles with diesel engine

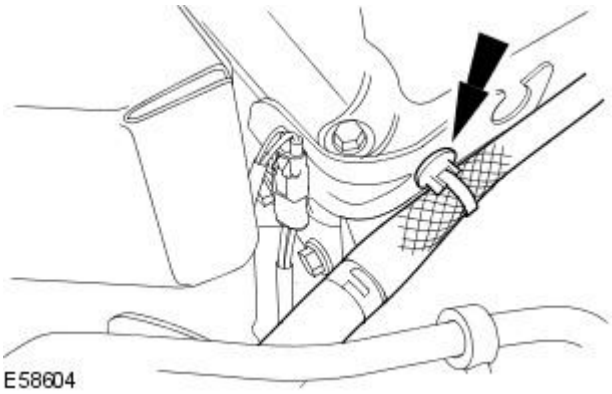

18. Detach the engine harness.

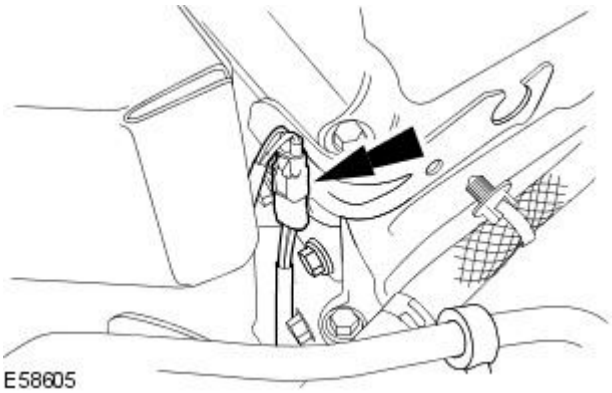

19. Detach the electrical connector.

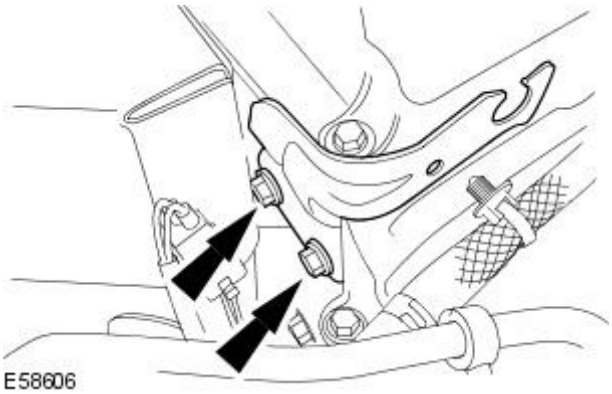

20. Remove the engine cover rear mount bracket.

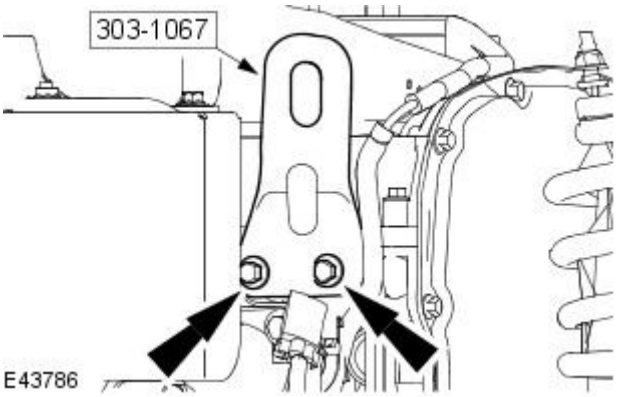

21. Install the special tool.

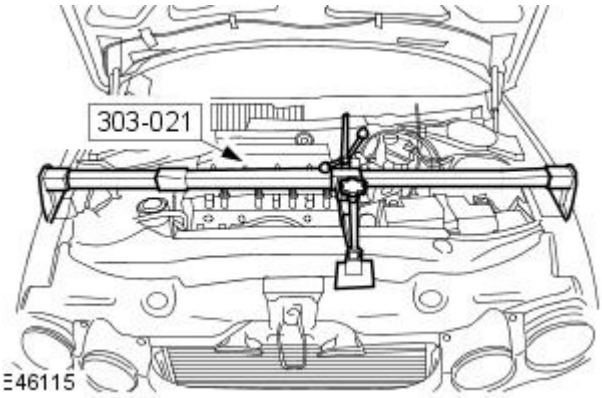

22. Using the special tool, support the engine and transmission assembly.

All vehicles

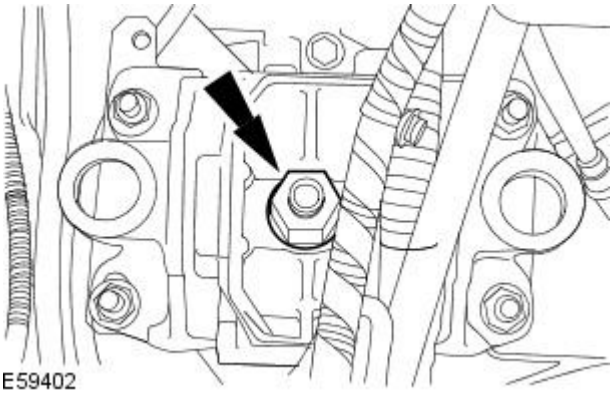

23. Remove the transaxle mount bracket securing nut.

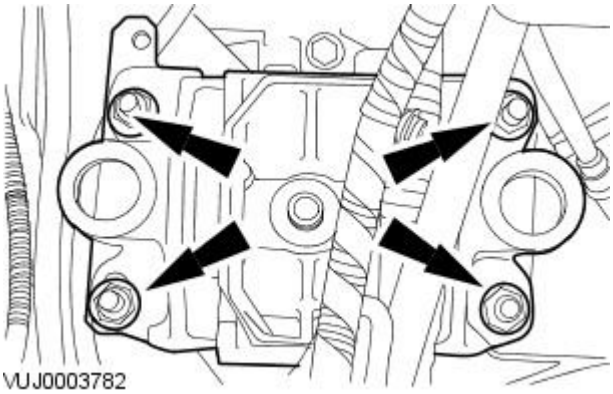

24. Remove the transaxle support insulator.

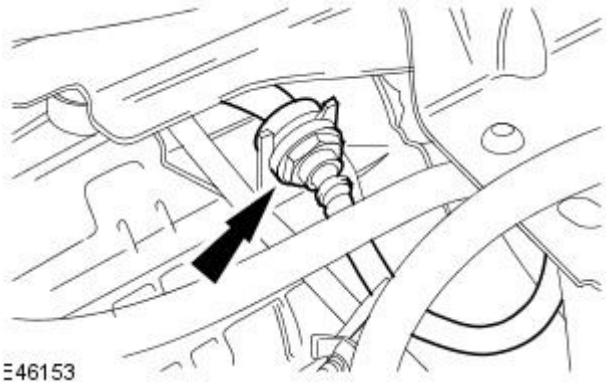

25. Detach the clutch master cylinder to clutch slave cylinder high pressure pipe from the support bracket.

All except vehicles with diesel engine

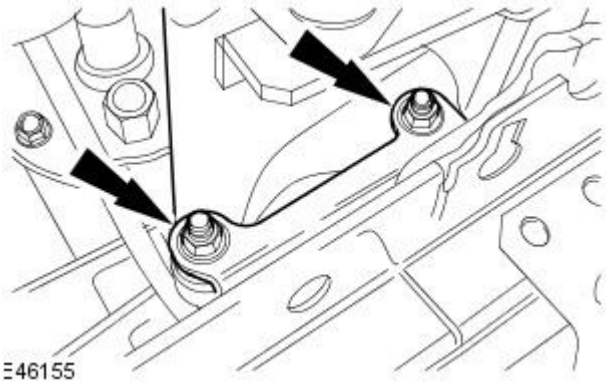

26. Remove the clutch master cylinder to clutch slave cylinder high pressure pipe support bracket.

Vehicles with diesel engine

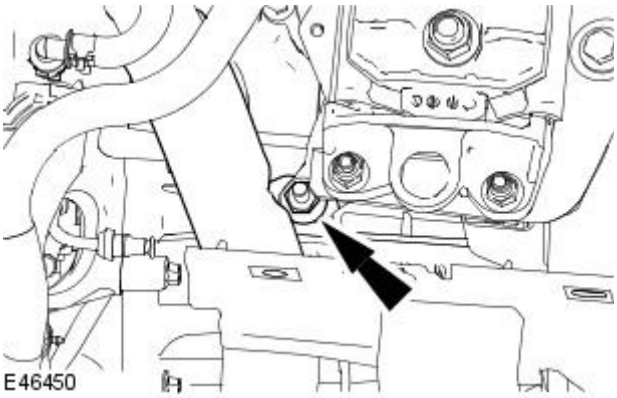

27. Remove the charge air cooler pipe retaining nut.

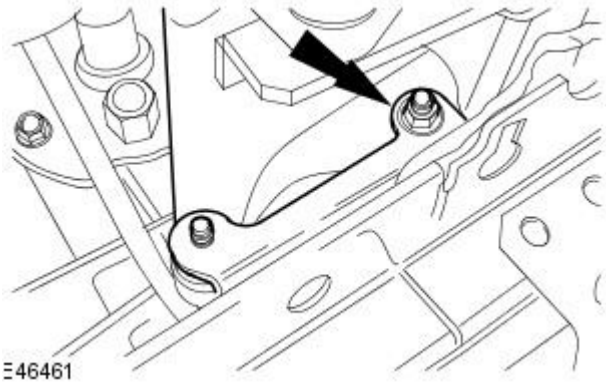

28. Remove the clutch master cylinder to clutch slave cylinder high pressure pipe support bracket.

All vehicles

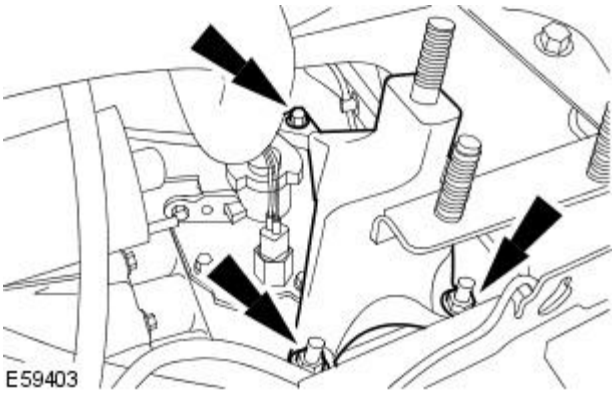

29. Remove the transaxle mount bracket.

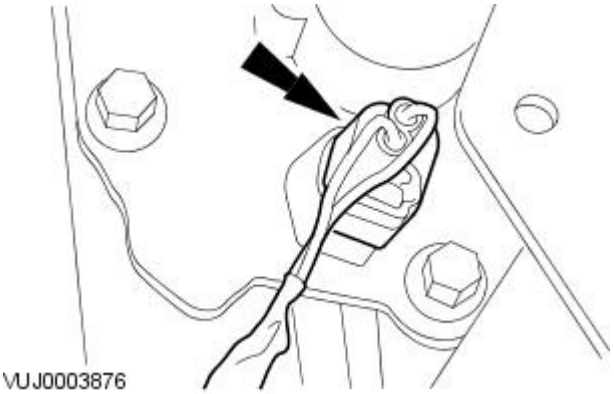

30. Disconnect the reverse lamp switch electrical connector.

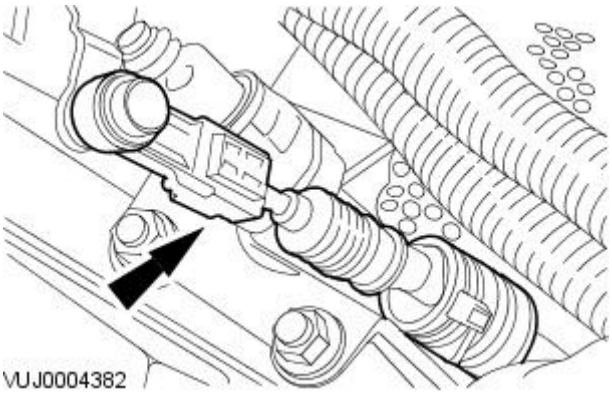

31. NOTE: Shown from the under side of the vehicle for clarity.

• NOTE: Lower shift cable shown, upper shift cable similar.

Disconnect the shift cables from the transaxle selectors.

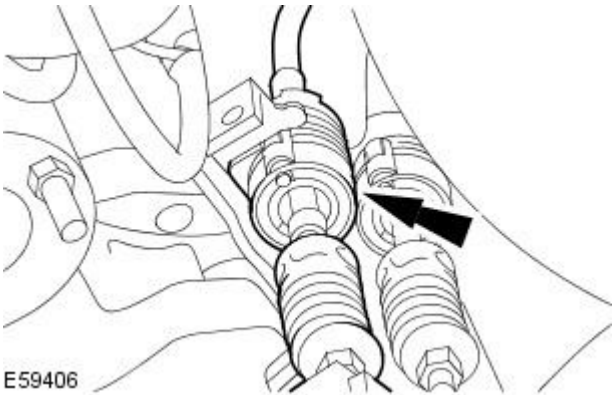

32. Detach the upper shift cable from the retaining bracket.

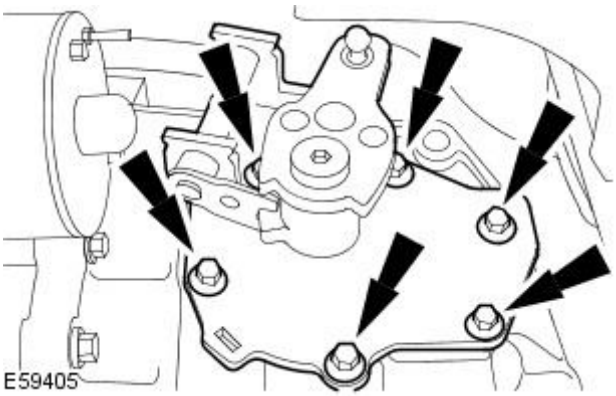

33. NOTE: Clean the selector mechanism mating surfaces and make sure all the sealant is removed.

Remove the selector mechanism.

Installation

All vehicles

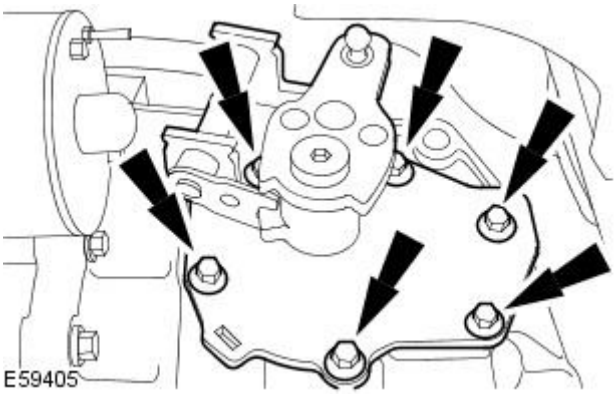

1. Apply sealant to the selector mechanism mating surfaces (bead diameter: 2 mm).

2. Install the selector mechanism.

- Tighten to 20 Nm.

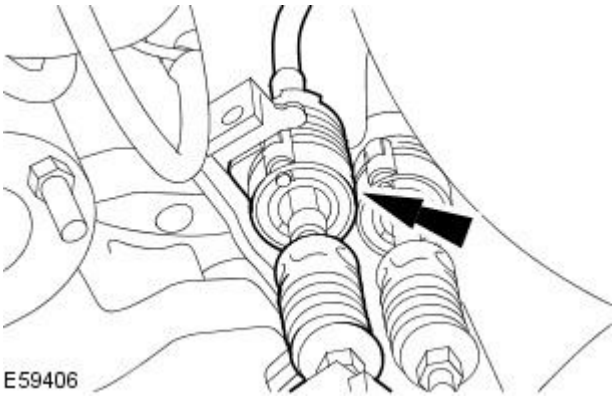

3. Attach the upper shift cable to the retaining bracket.

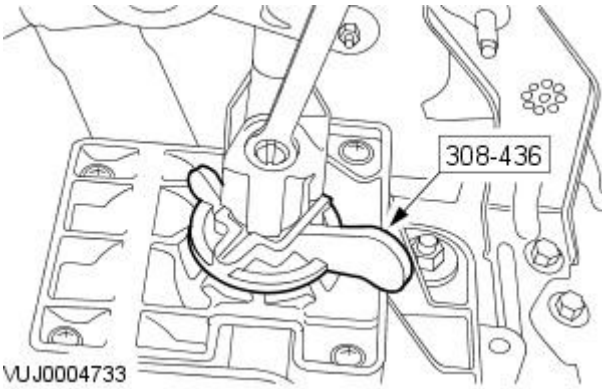

4. NOTE: Lift the reverse gear selector to fit special tool.

Using the special tool, make sure the gearshift lever is in the neutral position.

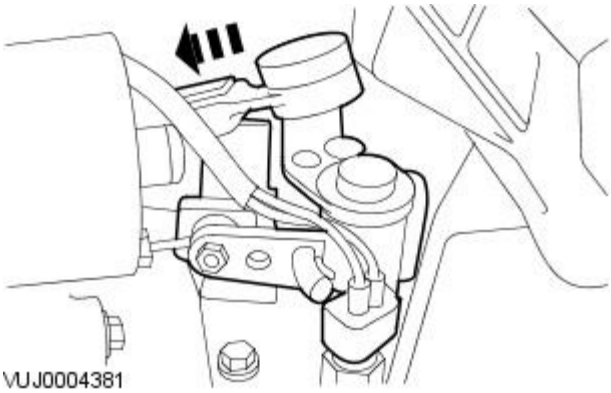

5. Make sure the transmission selector is in the fourth gear position.

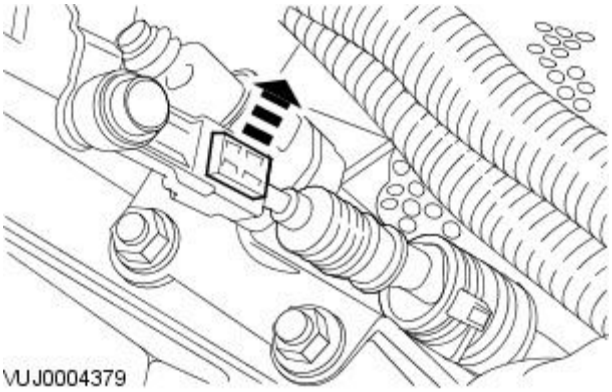

6. NOTE: Shown from the under side of the vehicle for clarity.

Detach the red locking tab on the shift cable.

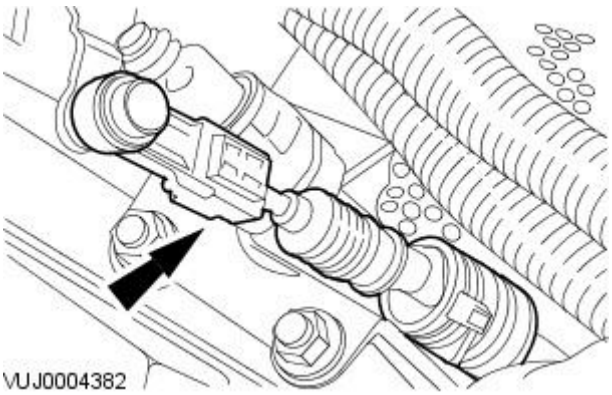

7. NOTE: Shown from the under side of the vehicle for clarity.

Attach the shift cable to the ball pin on the transmission selector.

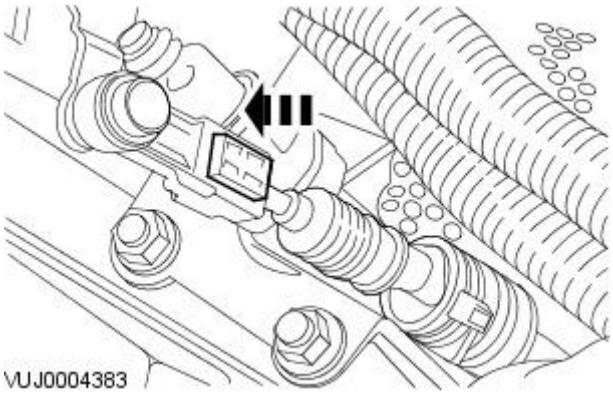

8. NOTE: Shown from the under side of the vehicle for clarity.

Press the red locking tab to secure the position of the shift cable.

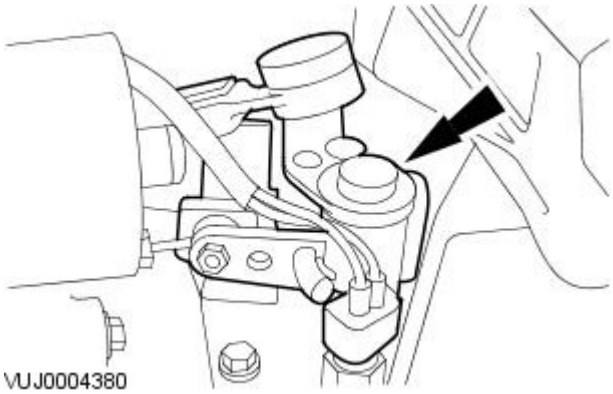

9. Place the transmission selector into the neutral position.

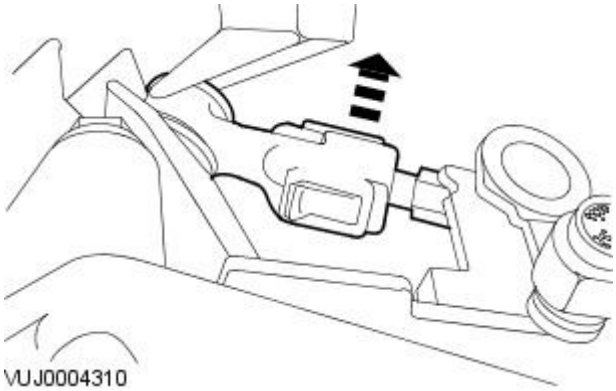

10. NOTE: Shown from the under side of the vehicle for clarity.

Detach the red locking tab on the selector cable.

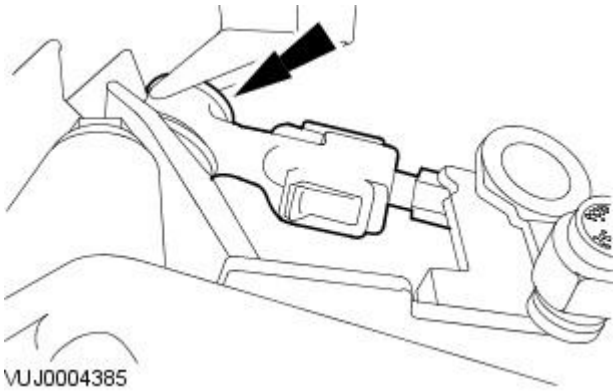

11. NOTE: Shown from the under side of the vehicle for clarity.

Attach the selector cable to the ball pin on the gearbox mass damper.

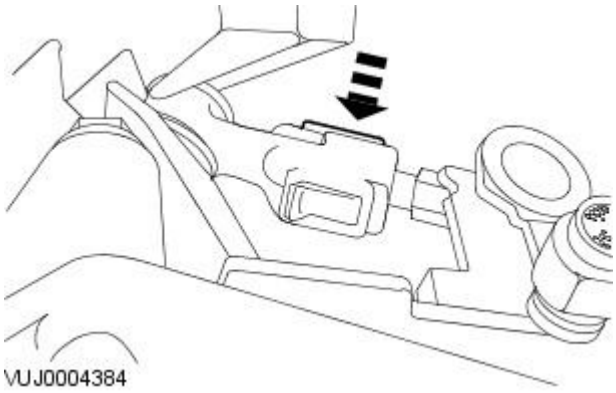

12. NOTE: Shown from the under side of the vehicle for clarity.

Press the red locking tab to secure the position of the selector cable.

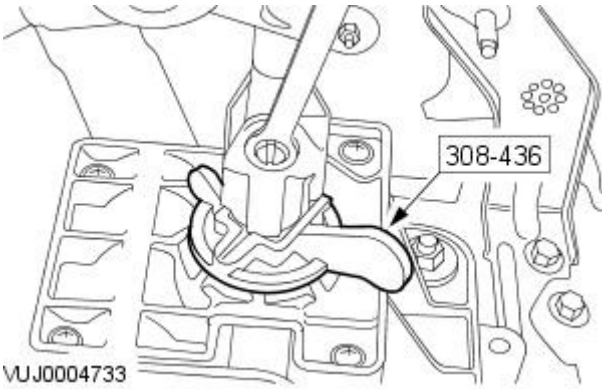

13. Remove the special tool.

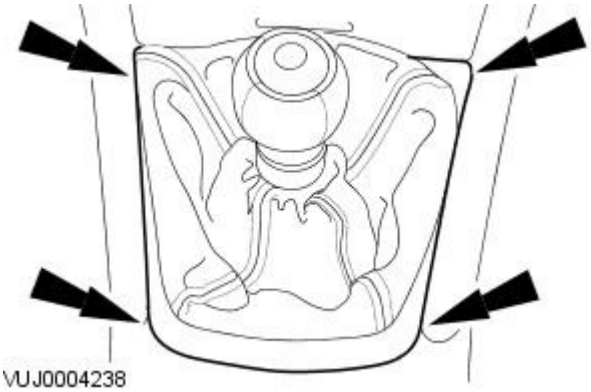

14. Attach the gearshift lever surround.

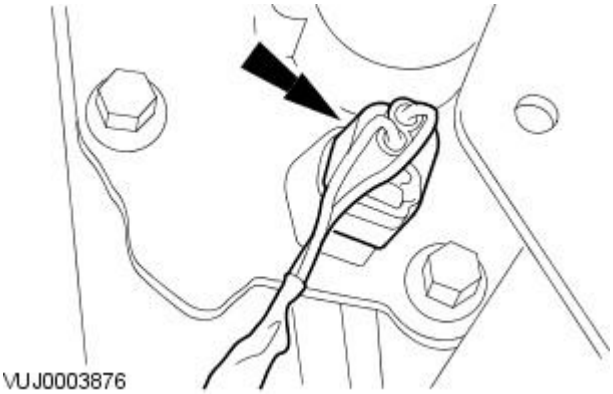

15. Check for correct operation of gear controls.

16. Connect the reverse lamp switch electrical connector.

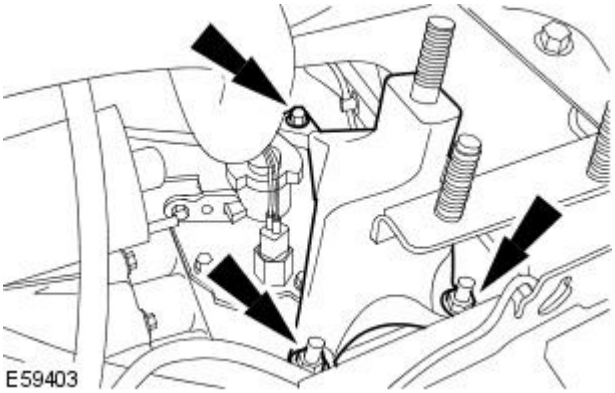

17. Install the transaxle mount bracket.

- Tighten to 80 Nm.

Vehicles with diesel engine

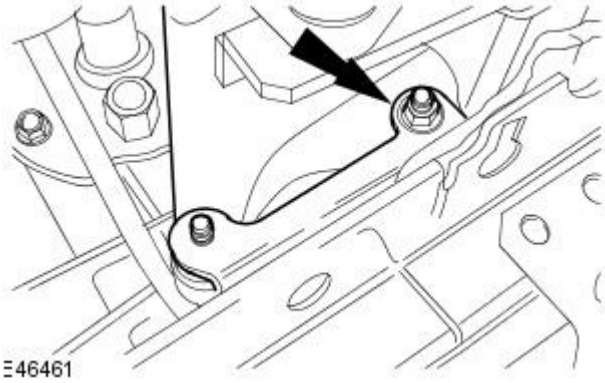

18. Install the clutch master cylinder to clutch slave cylinder high pressure pipe support.

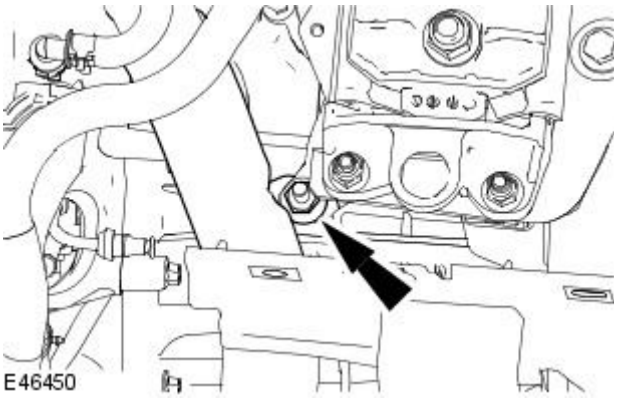

19. Install the charge air cooler pipe retaining nut.

All except vehicles with diesel engine

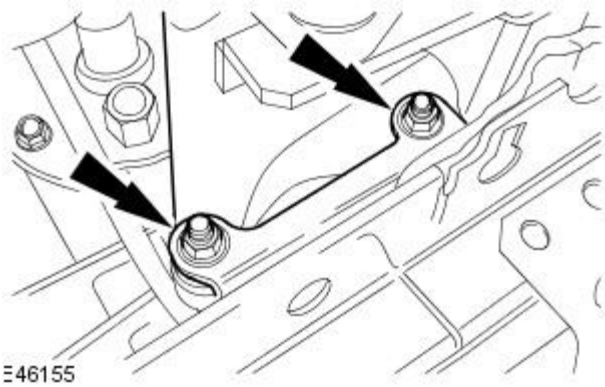

20. Install the clutch master cylinder to clutch slave cylinder high pressure pipe support bracket.

All vehicles

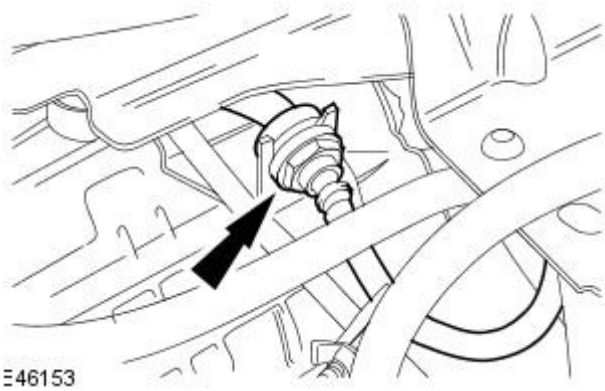

21. Attach the clutch master cylinder to clutch slave cylinder high pressure pipe to the support bracket.

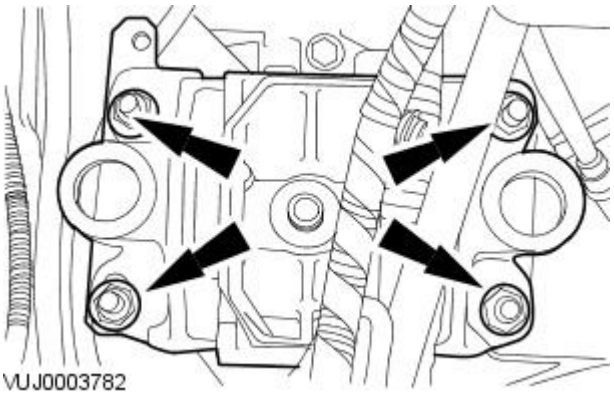

22. Install the transaxle support insulator.

- Tighten to 47 Nm.

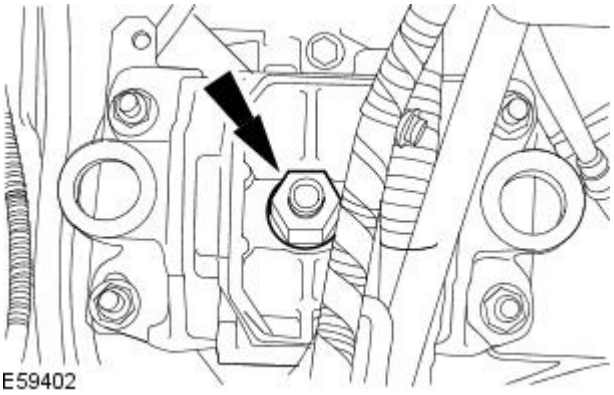

23. Install the transaxle mount bracket securing nut.

- Tighten to 133 Nm.

Vehicles with diesel engine

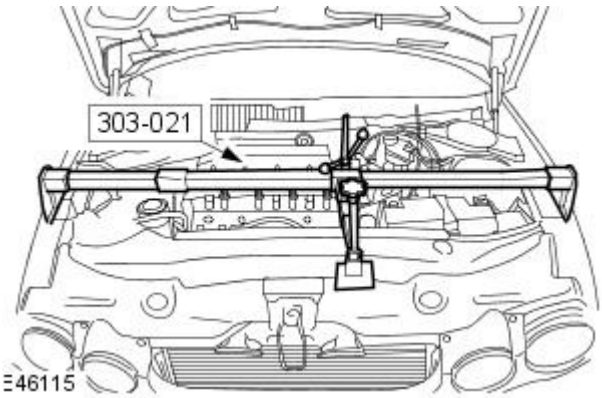

24. Remove the special tool.

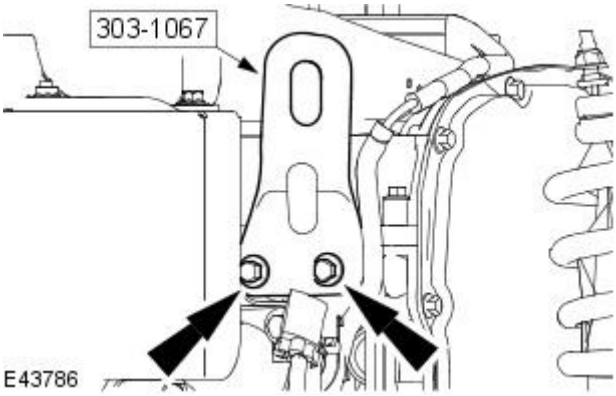

25. Remove the special tool.

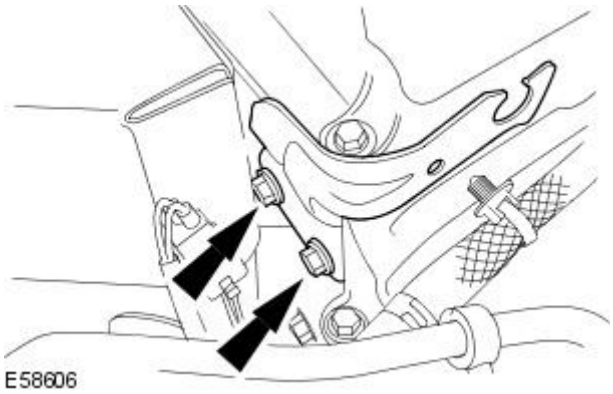

26. Install the engine cover rear mount bracket.

- Tighten to 23 Nm.

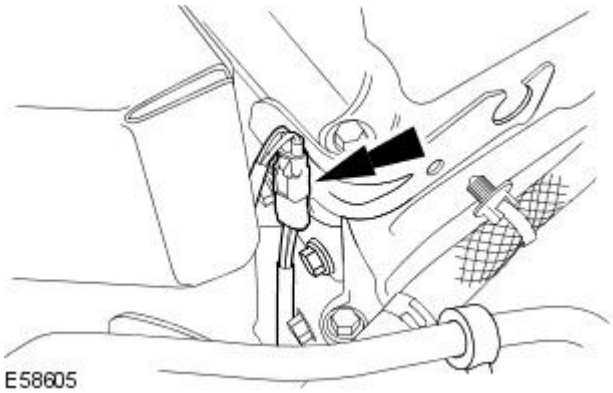

27. Attach the electrical connector.

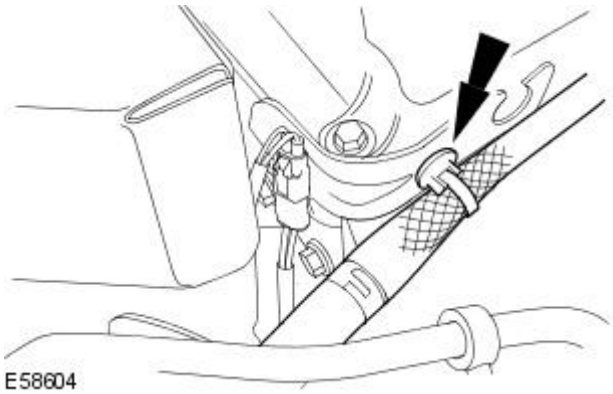

28. Attach the engine harness.

All vehicles

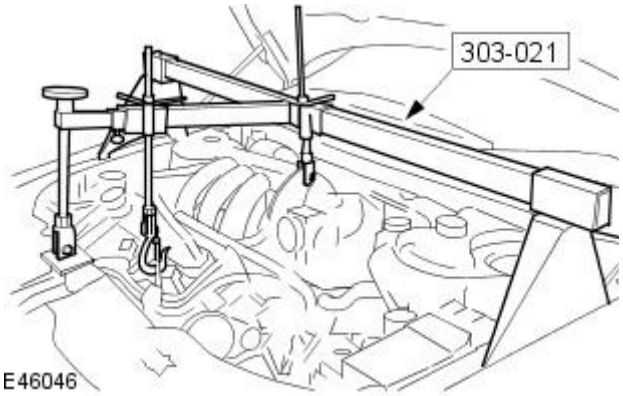

29. Remove the special tool.

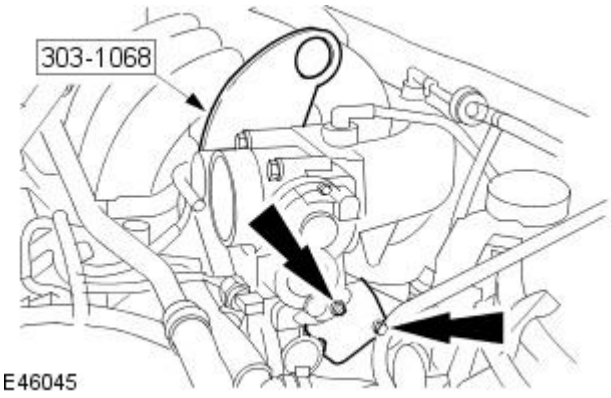

30. Remove the special tool.

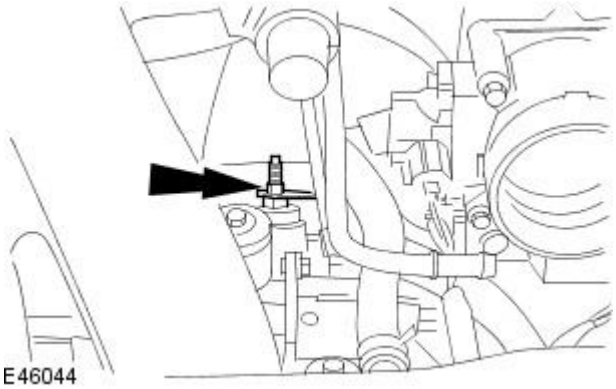

31. Attach the wiring harness to the camshaft cover retaining stud.

- Tighten to 6 Nm.

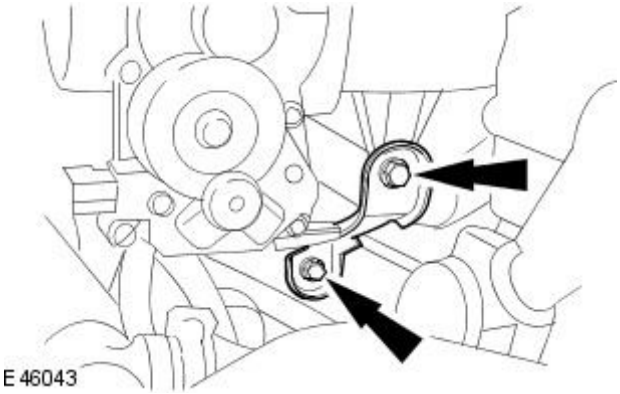

32. Install the intake manifold support bracket.

- Tighten to 10 Nm.

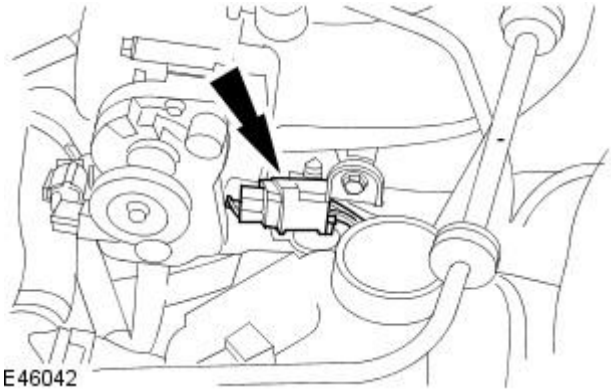

33. Attach the electrical connector to the intake manifold support bracket.

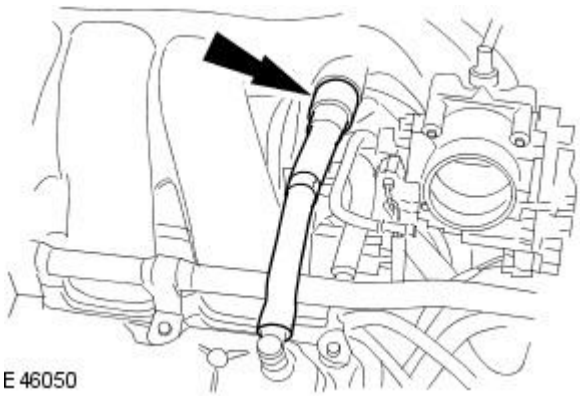

34. Attach the PCV hose to the intake manifold.

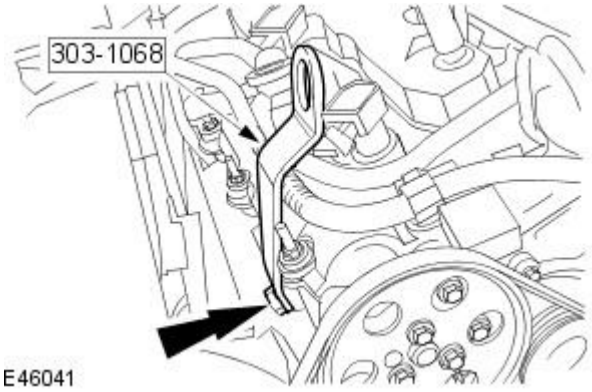

35. Remove the special tool.

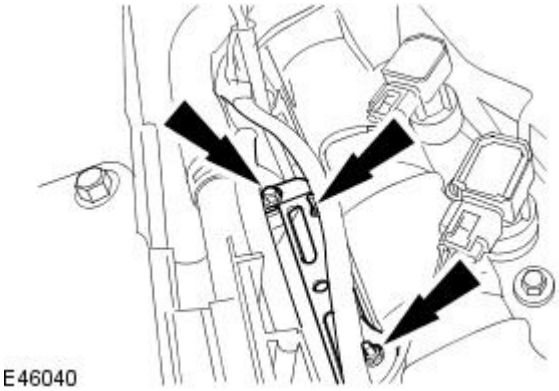

36. Install the air cleaner mount bracket.

- Tighten to 6 Nm.

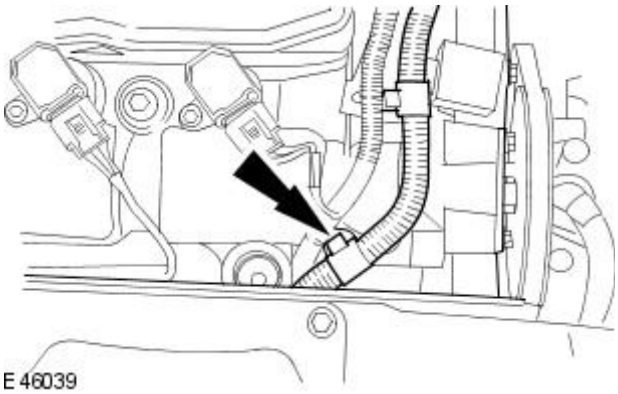

37. Attach the generator wiring harness retaining clip to the camshaft cover retaining clip.

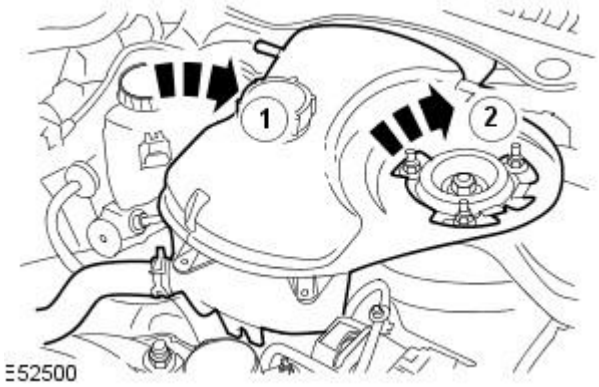

38. Attach the coolant expansion tank.

1. Reposition the coolant expansion tank.
2. Attach the coolant expansion tank.

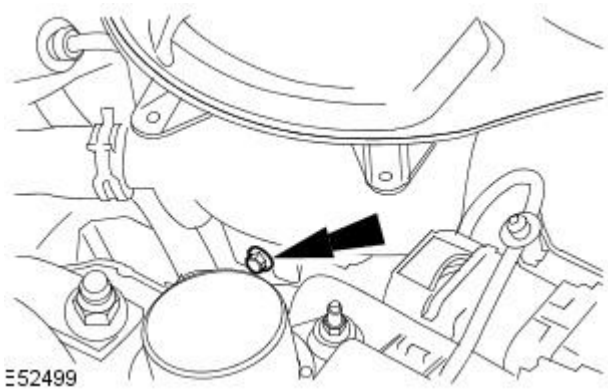

39. Install the coolant expansion tank retaining bolt.

- Tighten to 3 Nm.

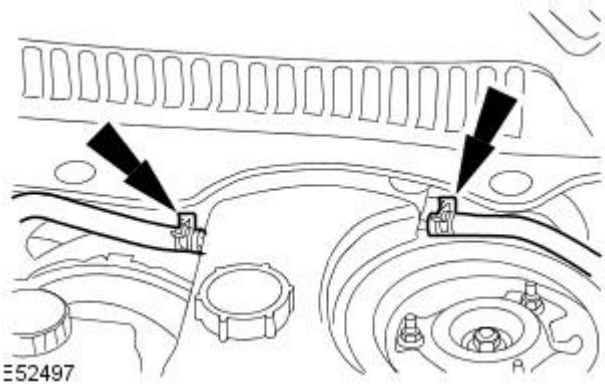

40. NOTE: Remove the blanking plugs from the cooling system vent hoses and the coolant expansion tank.

Attach the cooling system vent hoses to the coolant expansion tank.

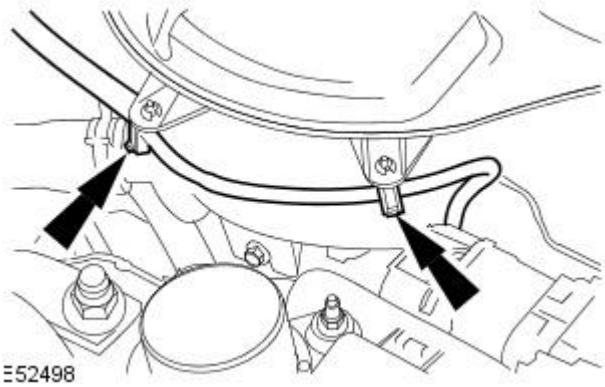

41. Attach the brake fluid low level warning indicator wiring harness to the coolant expansion tank.

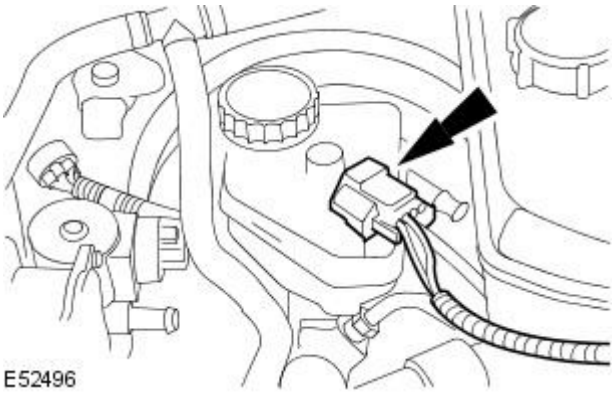

42. Connect the brake fluid low level warning indicator electrical connector.

43. Install the battery tray.
For additional information, refer to: Battery Tray (414-01 Battery, Mounting and Cables, Removal and Installation).

44. Install the air cleaner. For additional information, refer to:

Air Cleaner (303-12A Intake Air Distribution and Filtering - 2.0L NA V6 - AJV6/2.5L NA V6 - AJV6/3.0L NA V6 - AJ27, Removal and Installation),
Air Cleaner (303-12B Intake Air Distribution and Filtering - 2.0L Duratorq-TDCi/2.2L Duratorq-TDCi (110kW/150PS) - Puma, Removal and Installation).

Manual Transmission / Transaxle - Selector MechanismVehicles With: 6-Speed Manual Transaxle - MMT6

In-vehicle Repair

Materials

Name	Specification
Gasket Eliminator Sealant	WSK-M2G348-A5

Removal

1. Remove the battery tray.
   For additional information, refer to: Battery Tray (414-01 Battery, Mounting and Cables, Removal and Installation).
2. Detach the wiring harnesses.

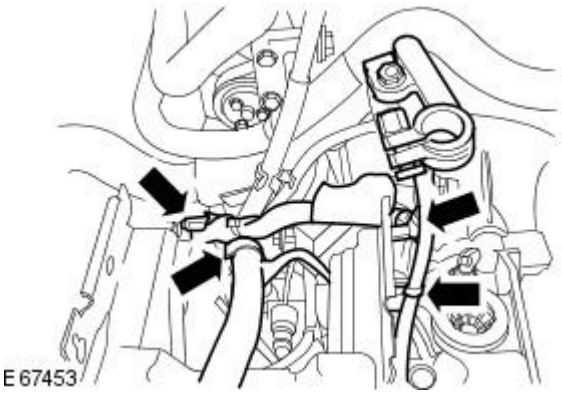

3. Detach the wiring harnesses.

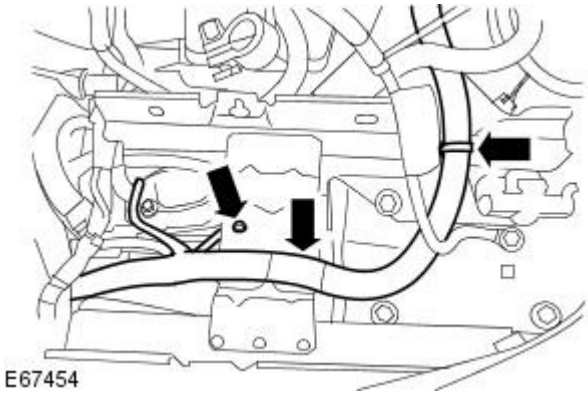

4. Detach the fuse box.

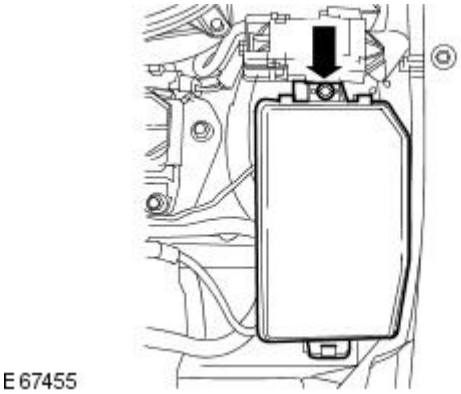

5. Detach the selector cables.

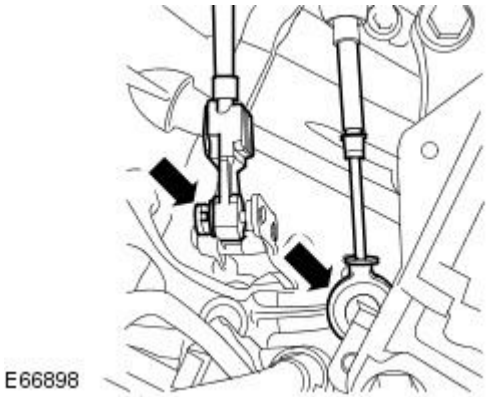

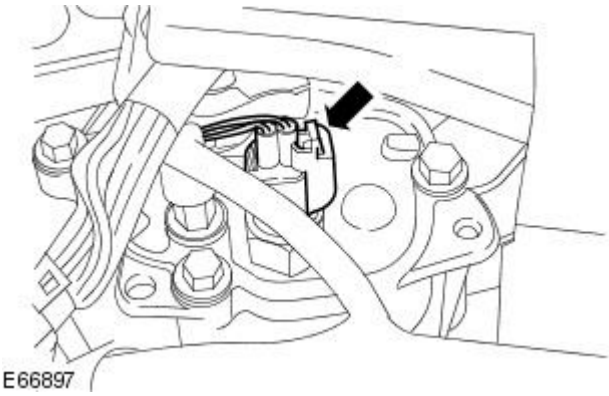

6. Disconnect the reverse lamp switch electrical connector.

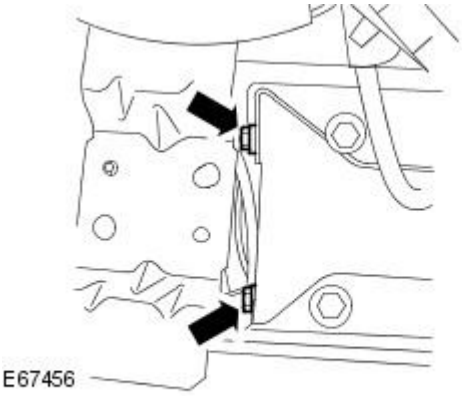

7. Remove the battery tray retaining bracket retaining bolts.

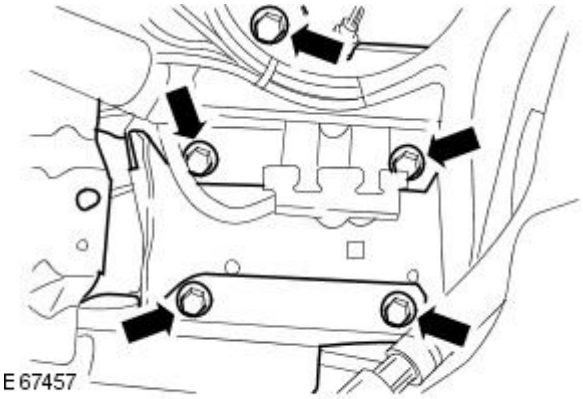

8. Remove the battery tray retaining bracket retaining bolts.

- Reposition the battery tray

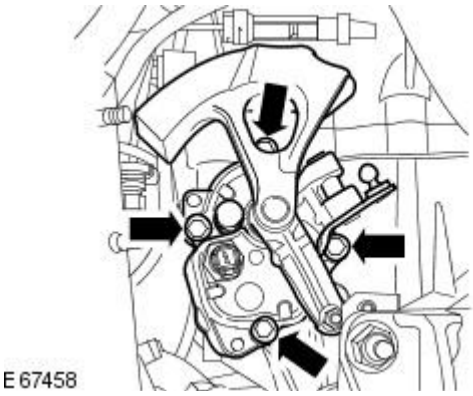

9. NOTE: Clean the selector mechanism mating surfaces and make sure all the sealant is removed.

Remove the selector mechanism.

Installation

1. Apply sealant to the selector mechanism mating surfaces (bead diameter: 2 mm).

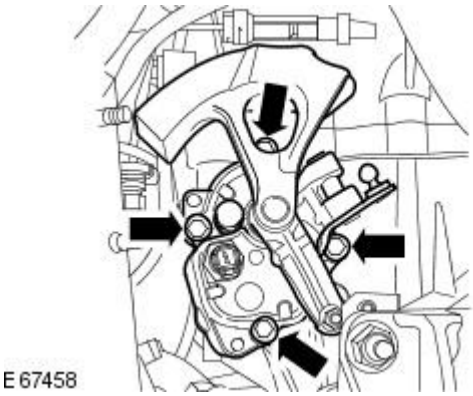

2. Install the selector mechanism.

- Tighten to 20 Nm.

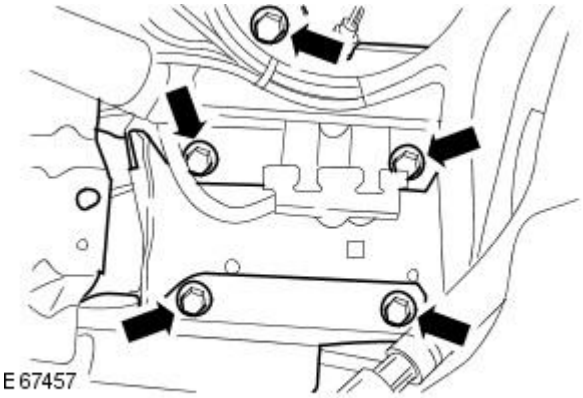

3. Loosly install the battery tray retaining bracket retaining bolts.

- Reposition the battery tray.

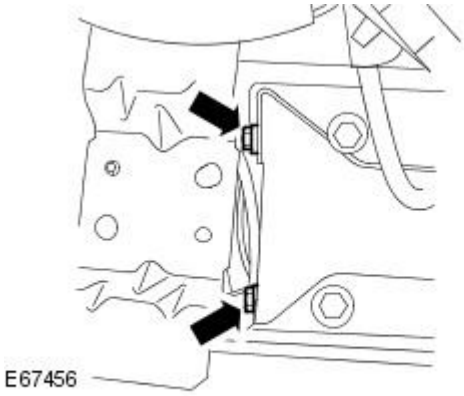

4. Install the battery tray retaining bracket retaining bolts.

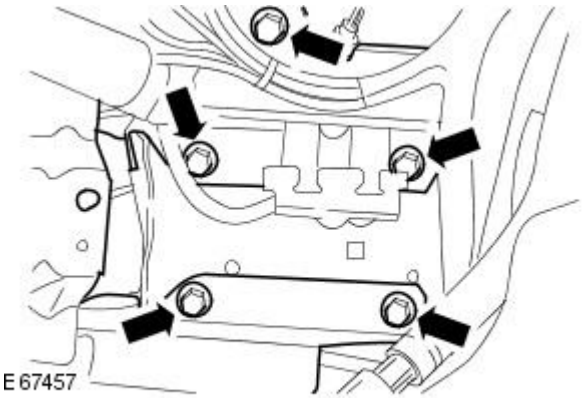

5. Fully tighten the battery tray retaining bracket retaining bolts.

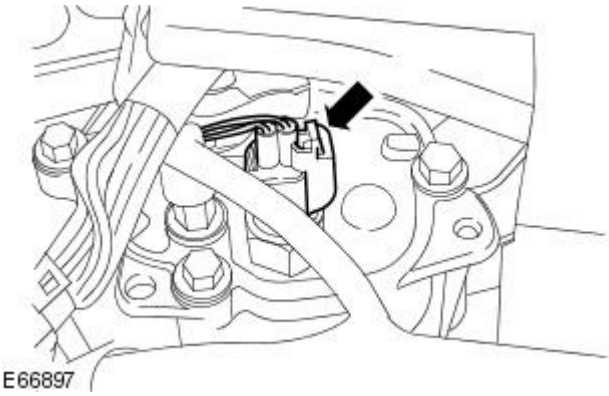

6. Connect the reverse lamp switch electrical connector.

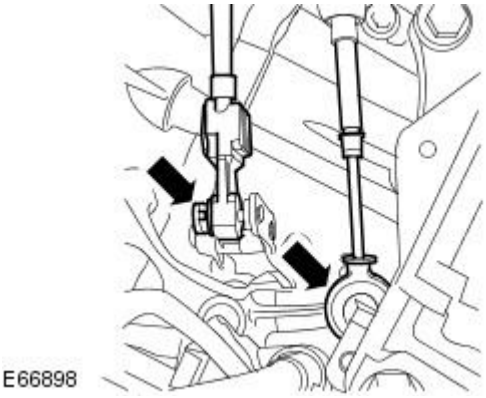

7. Attach the selector cables.

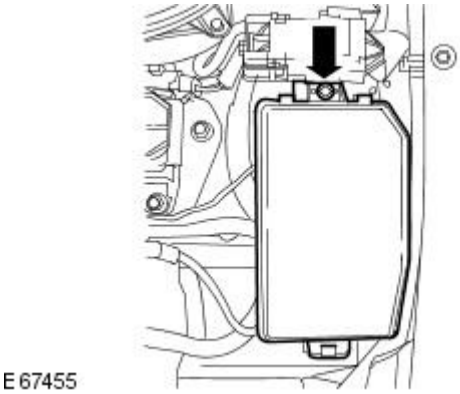

8. Attach the fuse box.

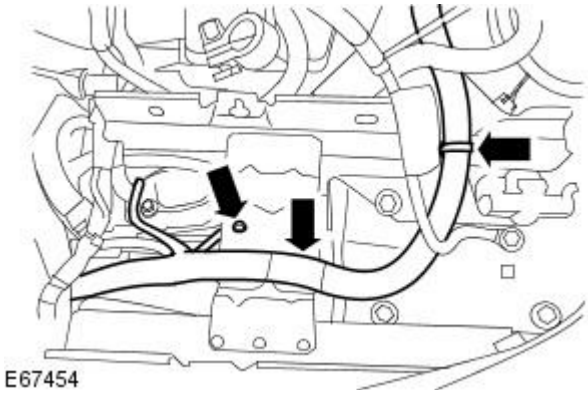

9. Attach the wiring harnesses.

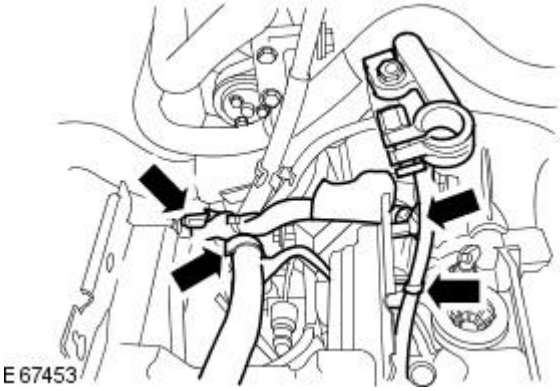

10. Attach the wiring harnesses.

11. Install the battery tray.
For additional information, refer to: Battery Tray (414-01 Battery, Mounting and Cables, Removal and Installation).

Manual Transmission / Transaxle - Support Insulator

In-vehicle Repair

Special Tool(s)	
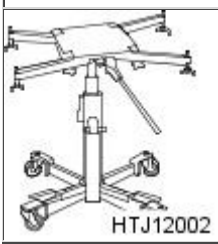	Powertrain assembly jack HTJ1200-2

Removal

All vehicles

1. Raise and support the vehicle.
   For additional information, refer to: Lifting (100-02 Jacking and Lifting, Description and Operation).
2. Install the special tool.

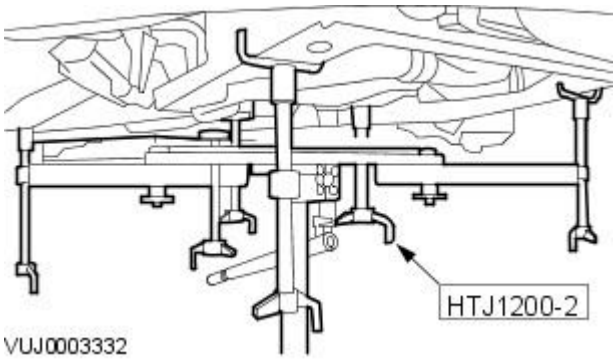

3. NOTE: Left-hand shown, right-hand similar.

   Position and adjust the special tool height rear adjuster.

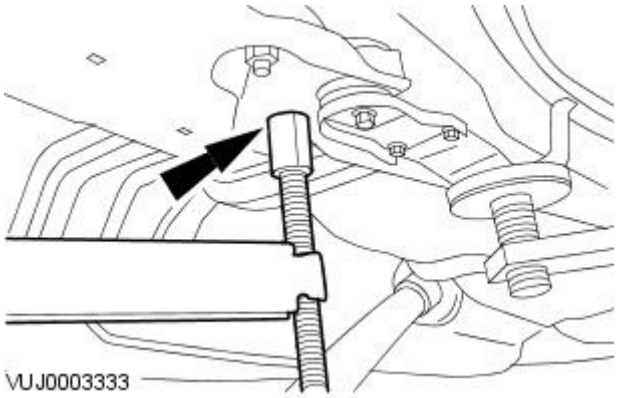

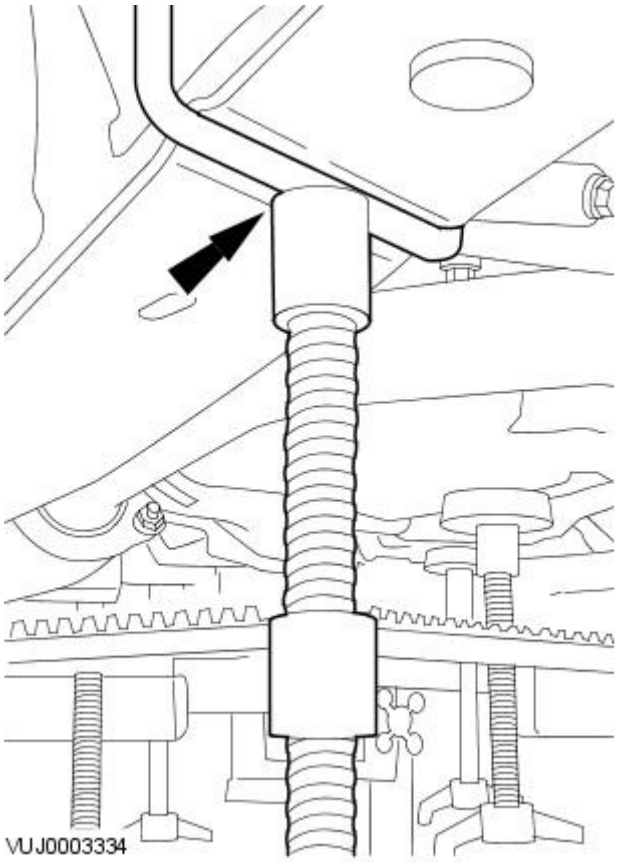

4. NOTE: Right-hand shown, left-hand similar.

Position and adjust the special tool front height adjuster.

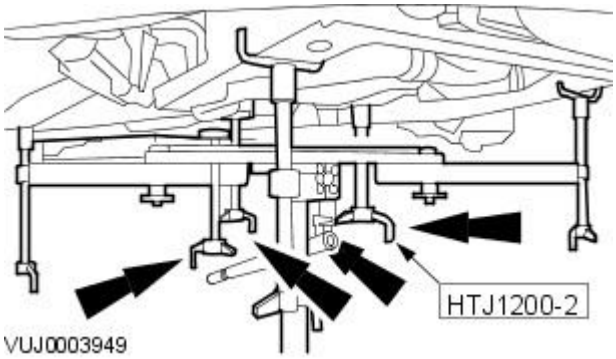

5. Position and adjust the special tool engine height adjusters.

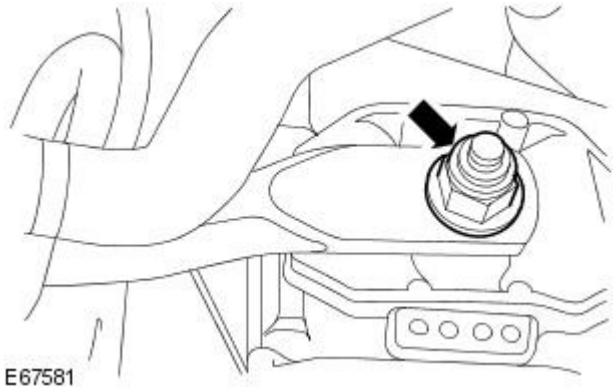

6. Remove the retaining nut.

Vehicles with 5-speed manual transaxle

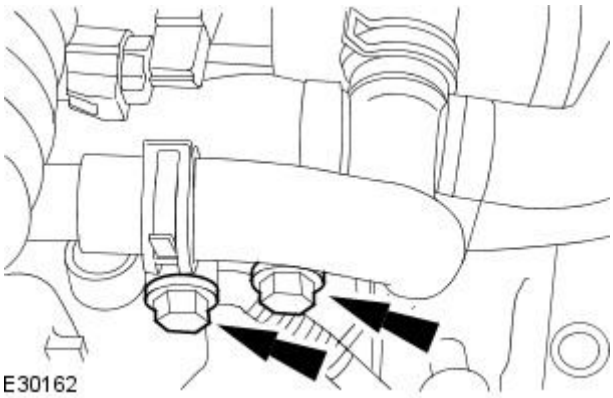

7. Detach the support bar.

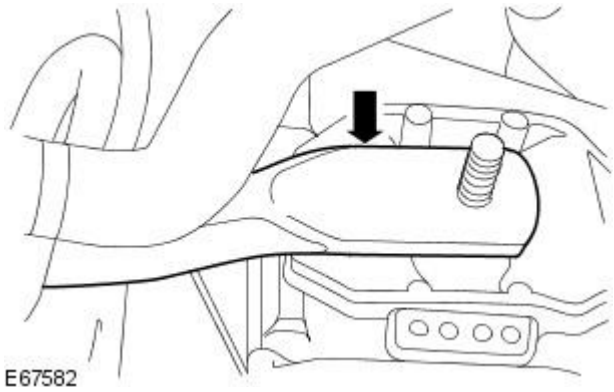

8. Remove the support bar.

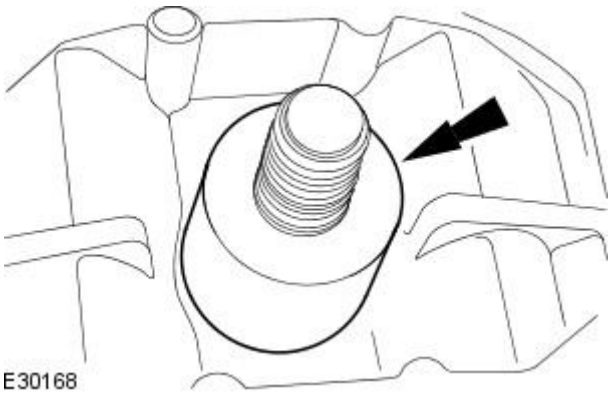

9. Remove the spacer.

All vehicles

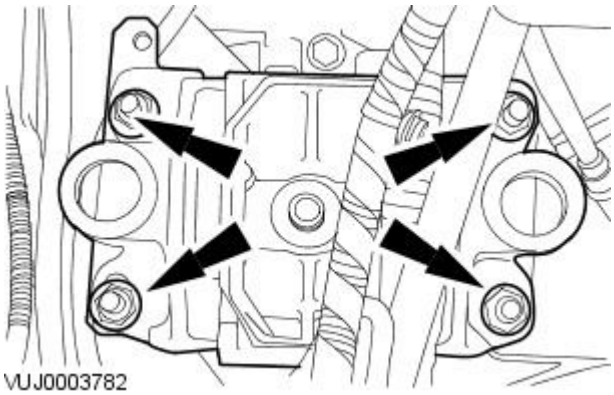

10. Remove the transmission mount.

- Remove the transmission mount retaining nuts.

Installation

All vehicles

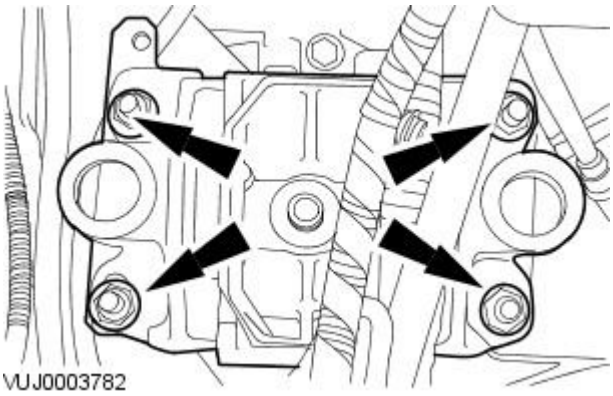

1. Install the transmission mount.

- Tighten to 47 Nm.

Vehicles with 5-speed manual transaxle

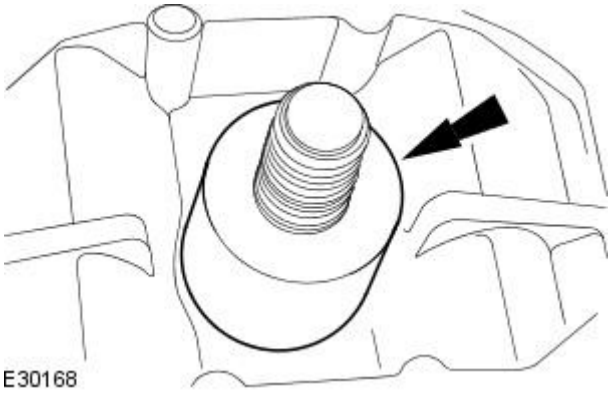

2. Install the spacer.

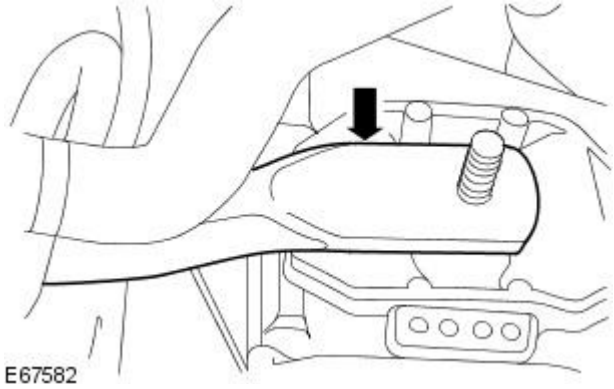

3. Install the support bar.

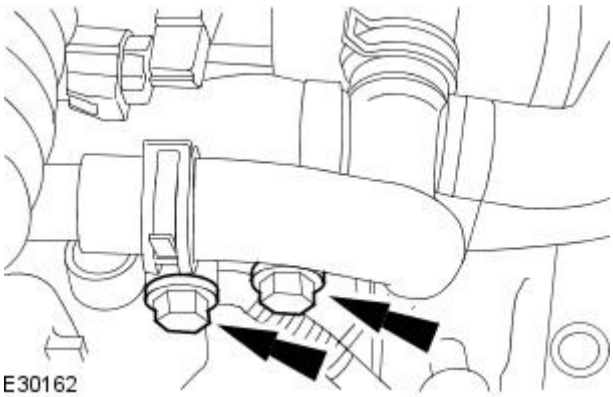

4. Tighten to 25 Nm.

All vehicles

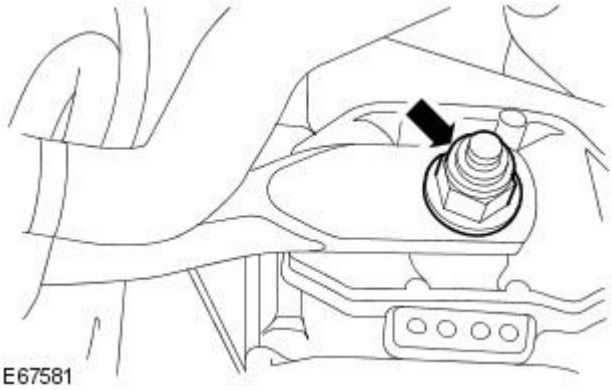

5. Tighten to 133 Nm.

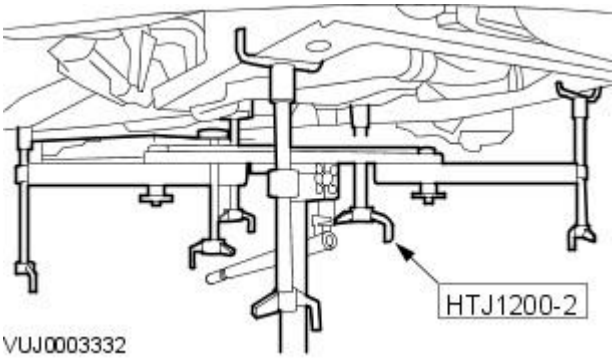

6. Remove the special tool.

7. Lower the vehicle.

Manual Transmission / Transaxle - Transaxle2.0L Duratorq-TDCi

Removal

Special Tool(s)	
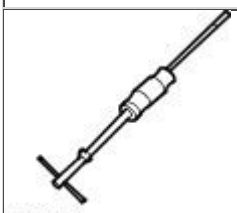 100012	Slide hammer 100-012
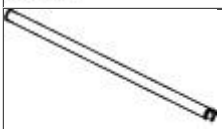 100-012-02	100-012-02 Slide hammer shaft
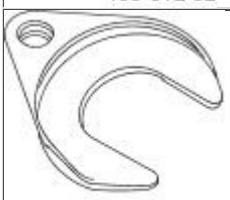 204-226	Halfshaft remover fork 204-226
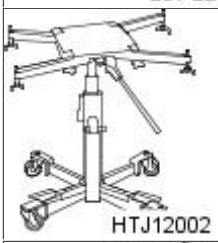 HTJ12002	Powertrain assembly jack HTJ1200-2
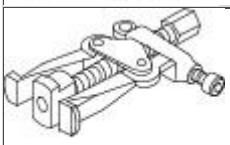 308-208	Pinion oil seal remover 308-208
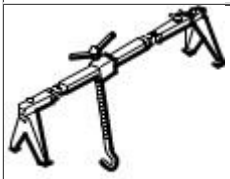 303-021	Engine support bracket 303-021
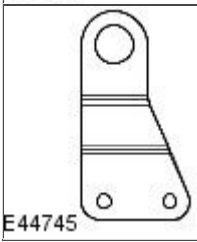 E44745	Engine lifting eye 303-1067

Removal

1. Remove the battery tray.
   For additional information, refer to: Battery Tray (414-01 Battery, Mounting and Cables, Removal and Installation).
2. Remove the air cleaner.
   For additional information, refer to: Air Cleaner (303-12B Intake Air Distribution and Filtering - 2.0L Duratorq-TDCi/2.2L Duratorq-TDCi (110kW/150PS) - Puma, Removal and Installation).

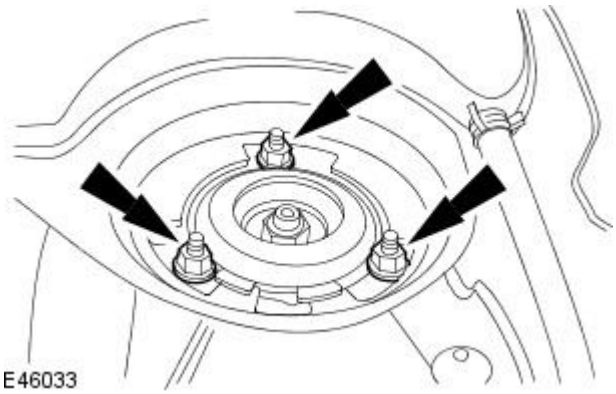

3. NOTE: Left-hand shown, right-hand similar.

Loosen the shock absorber and spring assembly securing nuts.

4. Remove the front subframe.
For additional information, refer to: Front Subframe - 2.0L Duratorq-TDCi/2.2L Duratorq-TDCi (110kW/150PS) - Puma (502-00 Uni-Body, Subframe and Mounting System, Removal and Installation).

5. Disconnect the vacuum pipes from the vacuum solenoid valves and the vacuum reservoir.

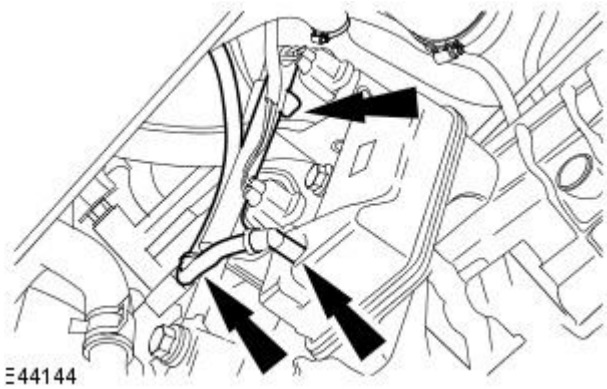

6. Disconnect the vacuum solenoid valves electrical connectors.

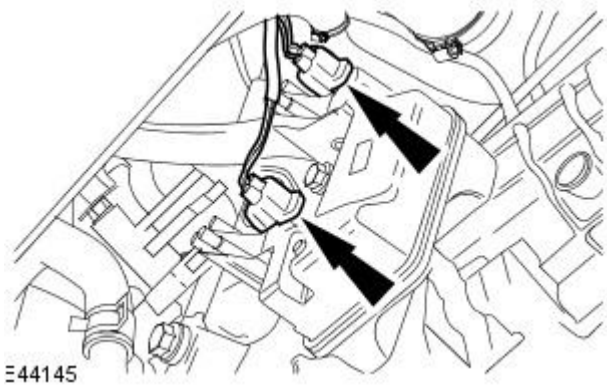

7. Detach the wiring harness from the vacuum solenoids and vacuum reservoir mount bracket.

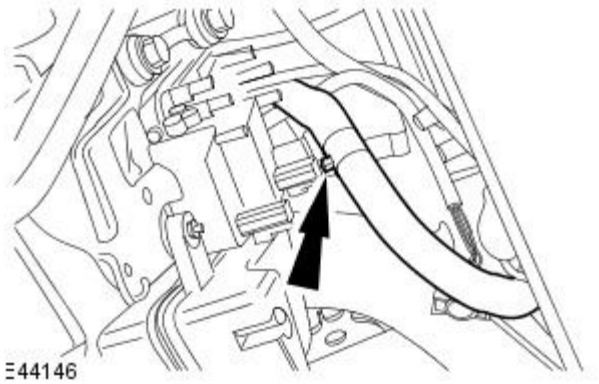

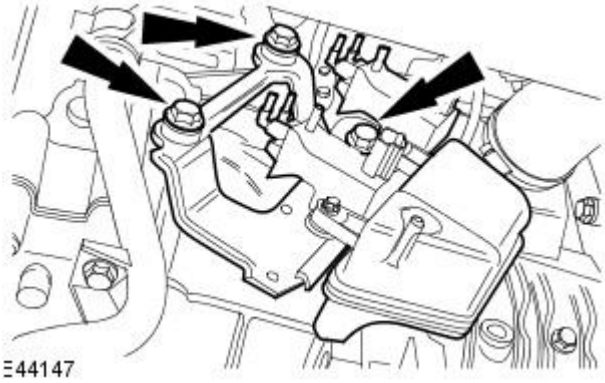

8. Remove the vacuum solenoids and vacuum reservoir mount bracket assembly.

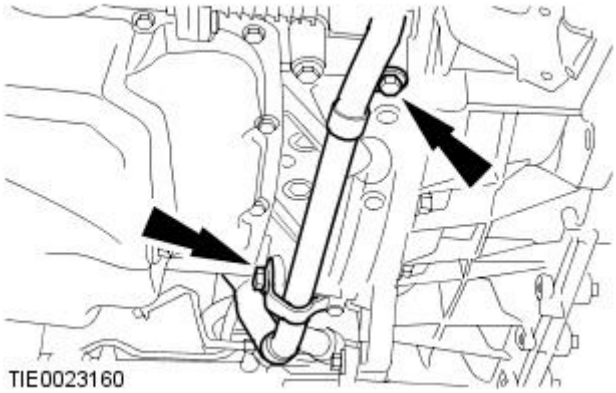

9. Detach the coolant pipe from the engine.

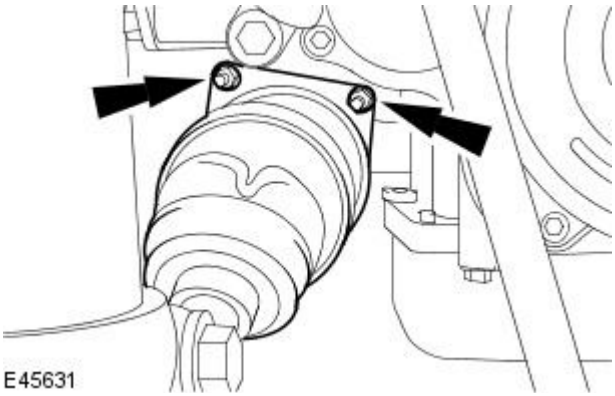

10. CAUTION: Make sure the halfshaft constant velocity (CV) joints do not over articulate. Failure to follow this instruction may result in damage to the CV joints.

Detach the right-hand halfshaft.

- Disengage the right-hand halfshaft from the transaxle.
- Secure the right-hand halfshaft to one side.

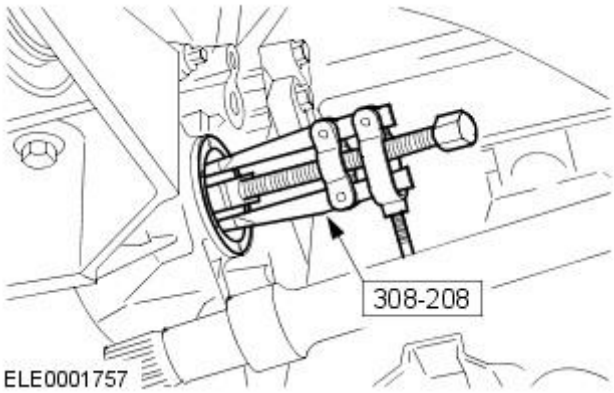

11. NOTE: Plug the transaxle to prevent fluid loss or dirt ingress.

Using the special tool, remove the right-hand halfshaft seal.

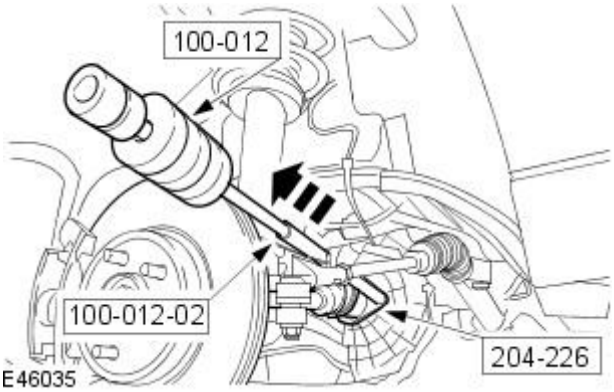

12. Using the special tools, detach the left-hand halfshaft.

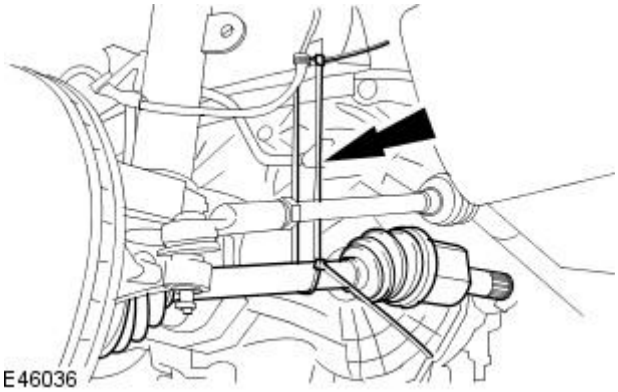

13. CAUTION: Make sure the halfshaft CV joints do not over articulate. Failure to follow this instruction may result in damage to the CV joints.

Support the left-hand halfshaft.

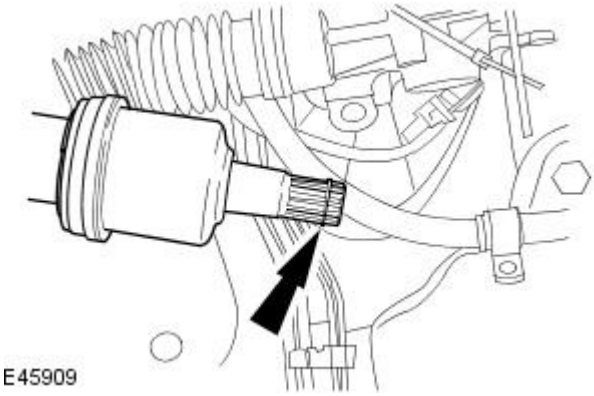

14. Remove and discard the left-hand halfshaft snap ring.

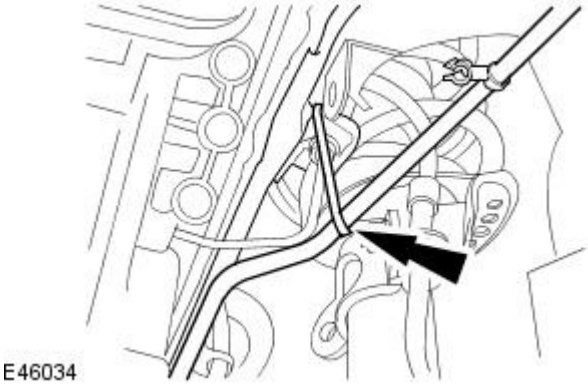

15. Support the power steering fluid pipe.

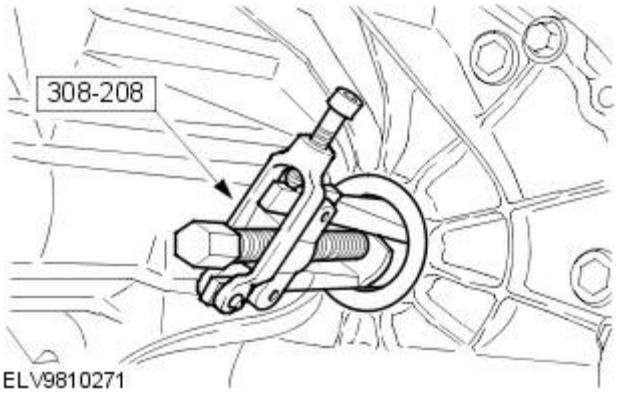

16. NOTE: Plug the transaxle to prevent fluid loss or dirt ingress.

Using the special tool, remove the left-hand halfshaft seal.

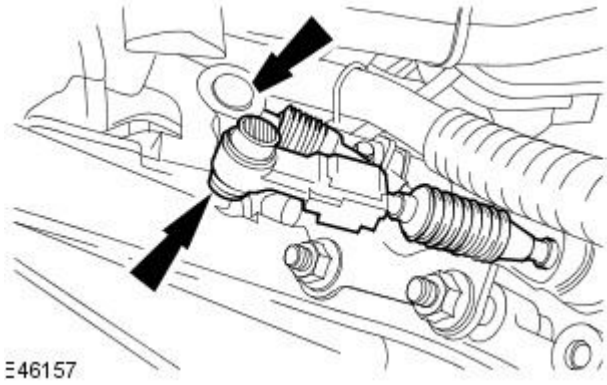

17. Detach the gearshift cables from the transaxle.

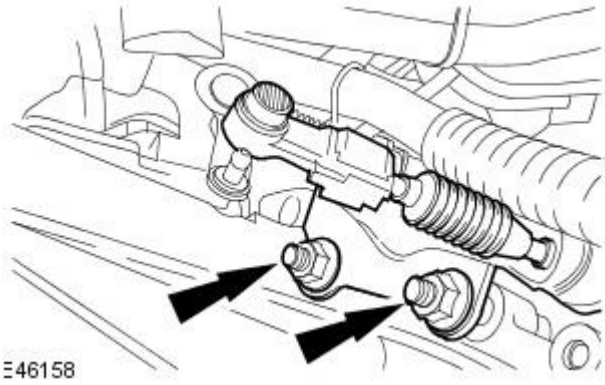

18. Detach the gearshift cable support bracket from the transaxle.

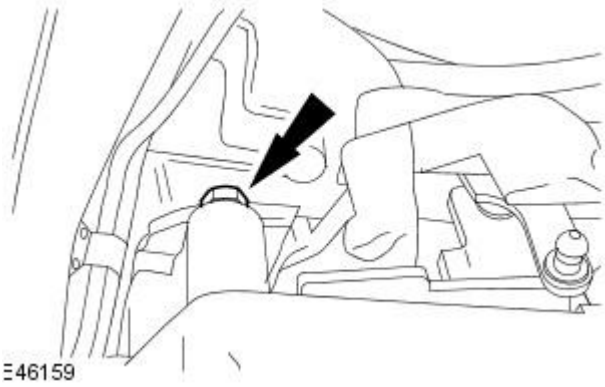

19. Remove the transaxle mount bracket retaining bolt.

20. Lower the vehicle.

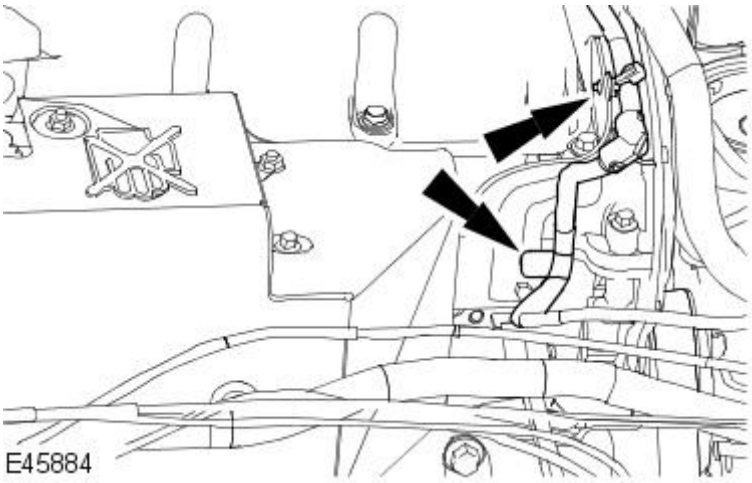

21. Detach the generator and starter motor positive cable from the engine cover mounting bracket.

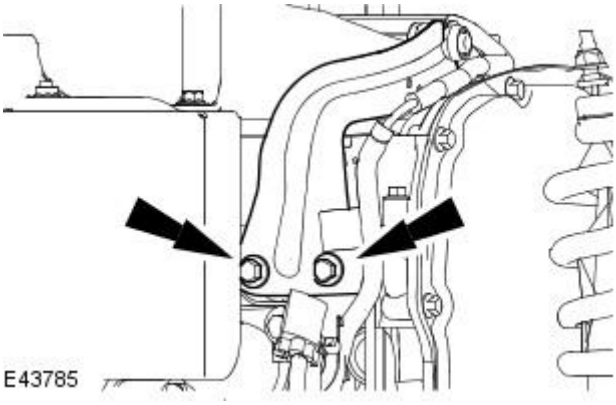

22. Remove the engine cover rear mount bracket.

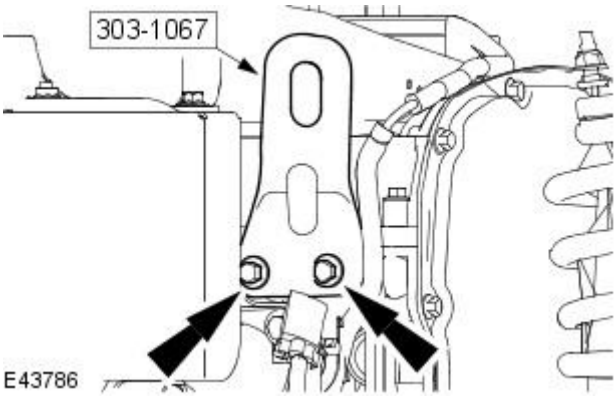

23. Install the special tool.

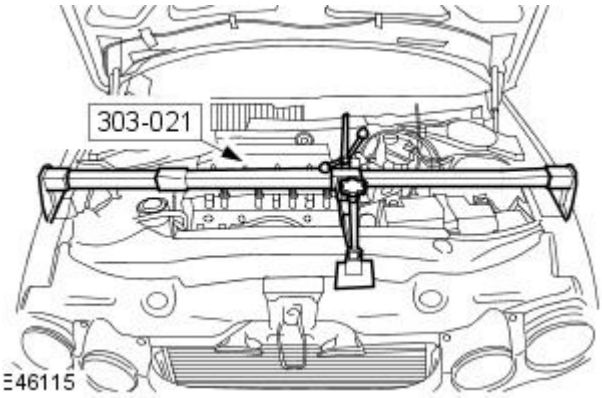

24. Using the special tool, support the engine and transmission assembly.

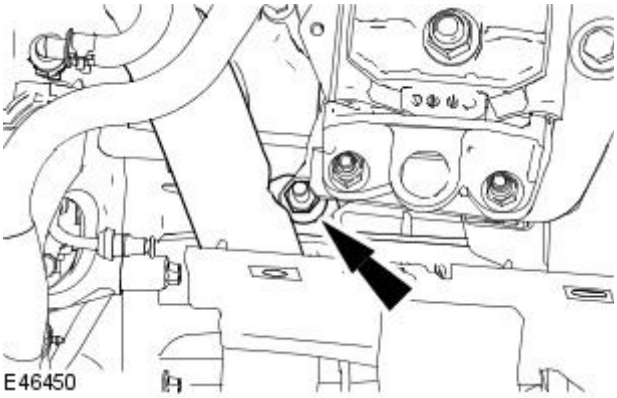

25. Detach the charge air cooler pipe.

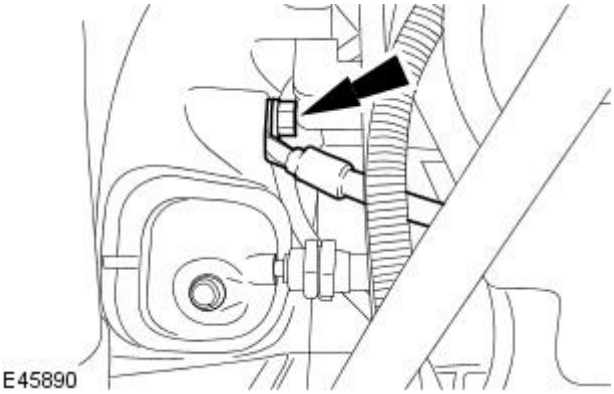

26. Detach the transaxle ground cable.

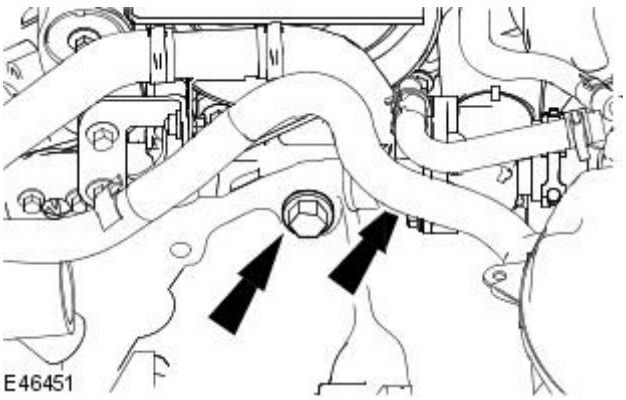

27. Remove the transaxle upper retaining bolts.

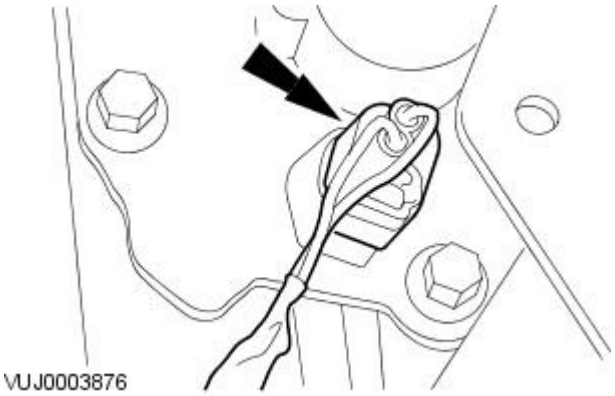

28. Disconnect the reverse lamp switch electrical connector.

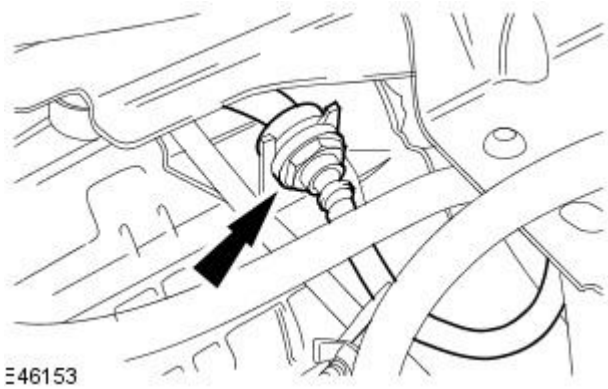

29. CAUTION: If brake fluid is split on the paintwork, the affected area must be washed down immediately with cold water. Failure to follow this instruction may result in damage to the vehicle.

Detach the clutch master cylinder to clutch slave cylinder high pressure pipe from the support bracket.

- Install a suitable pipe clamp to the clutch master cylinder to clutch slave cylinder high pressure pipe.

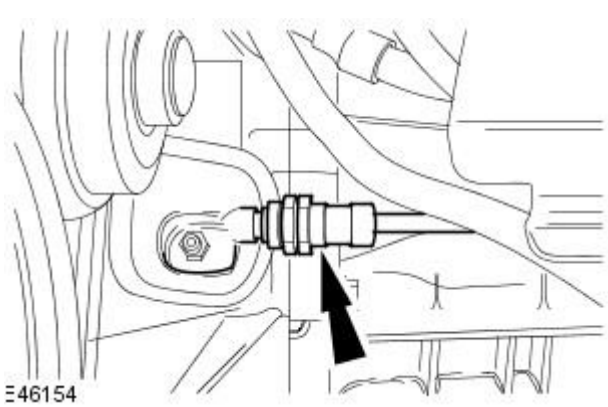

30. CAUTION: If brake fluid is split on the paintwork, the affected area must be washed down immediately with cold water. Failure to follow this instruction may result in damage to the vehicle.

Detach the clutch master cylinder to clutch slave cylinder high pressure pipe from the clutch slave cylinder.

- Remove the clutch master cylinder to clutch slave cylinder high pressure pipe retaining clip.

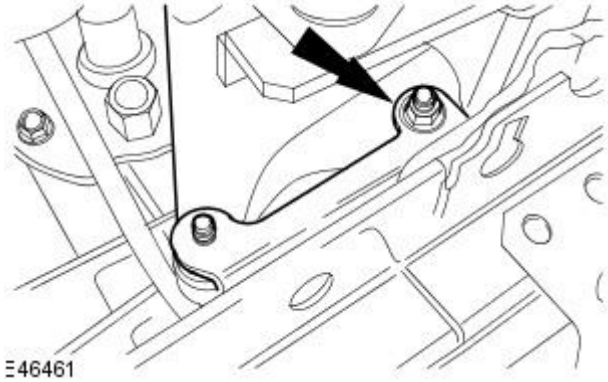

31. Remove the clutch master cylinder to clutch slave cylinder high pressure pipe support bracket.

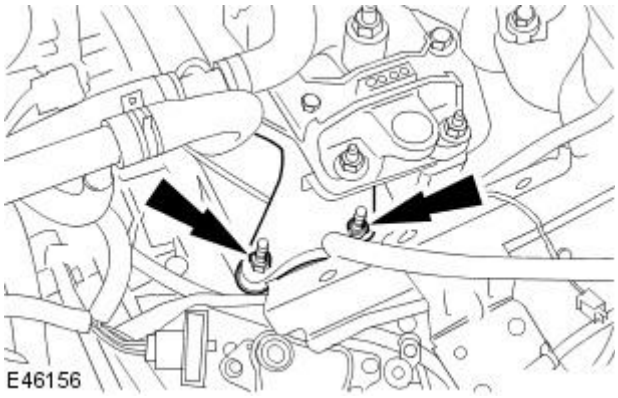

32. Remove the transaxle mount bracket retaining studs.

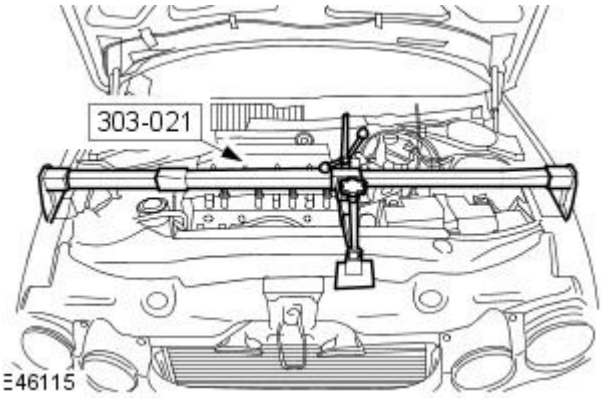

33. Using the engine support bracket lower the powertrain assembly approximately 60 mm (2.36 inches) between the transaxle and transaxle mount bracket.

34. Raise the vehicle.

35. Align the powertrain assembly jack to the transaxle.

- Secure the transaxle to the powertrain assembly jack.

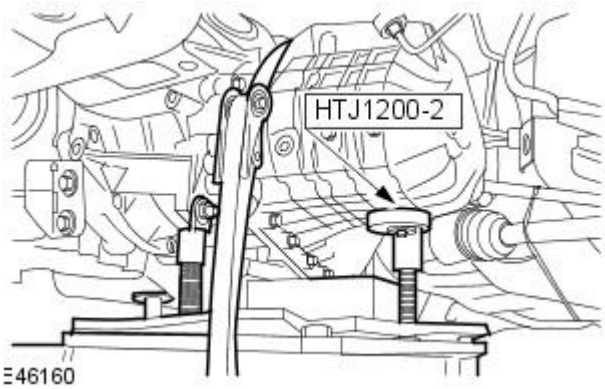

36. Remove the transaxle retaining bolts.

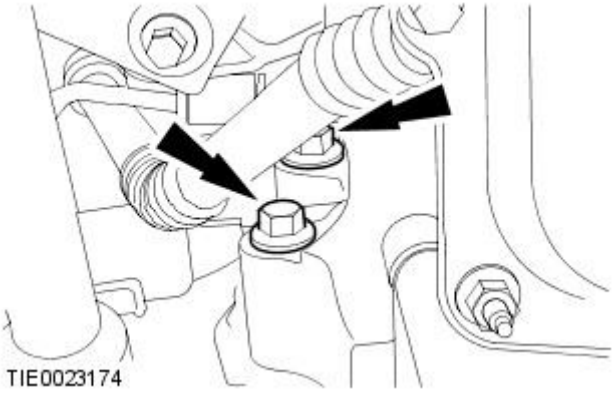

37. NOTE: Shown with the powertrain assembly jack removed for clarity.

Remove the transaxle retaining bolts.

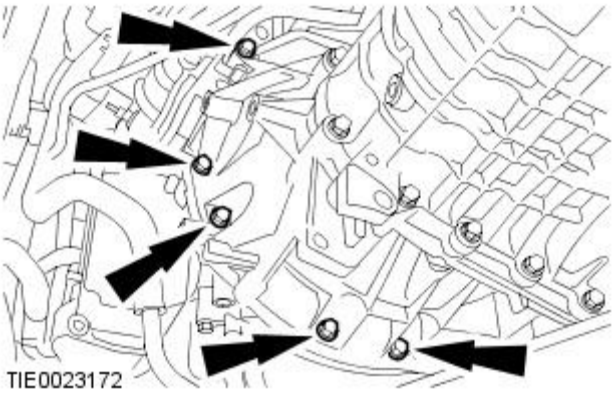

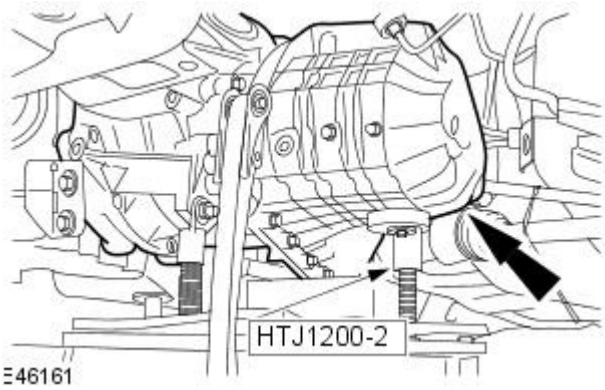

38. Remove the transaxle.

- Detach the transaxle from the clutch plate.
- Lower the powertrain assembly jack and transaxle assembly.

Manual Transmission / Transaxle - Transaxle2.2L Duratorq-TDCi (110kW / 150PS) - Puma

Removal

Special Tool(s)	
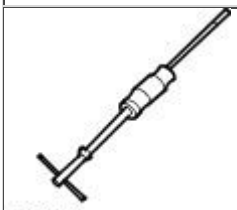 100012	Slide hammer 100-012
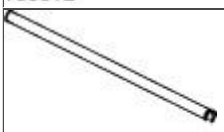 100-012-02	100-012-02 Slide hammer shaft
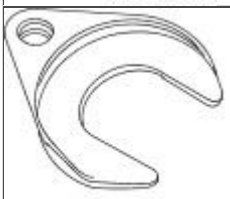 204-226	Halfshaft remover fork 204-226
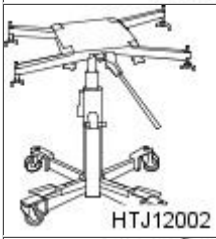 HTJ12002	Powertrain assembly jack HTJ1200-2
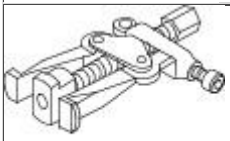 308-208	Pinion oil seal remover 308-208
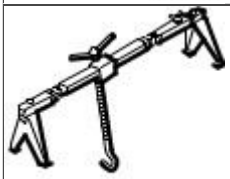 303-021	Engine support bracket 303-021

Removal

1. Remove the battery tray.
   For additional information, refer to: Battery Tray (414-01 Battery, Mounting and Cables, Removal and Installation).
2. Remove the front subframe.
   For additional information, refer to: Front Subframe - 2.0L Duratorq-TDCi/2.2L Duratorq-TDCi (110kW/150PS) - Puma (502-00 Uni-Body, Subframe and Mounting System, Removal and Installation).
3. Remove the charge air cooler intake pipe retaining bolts.

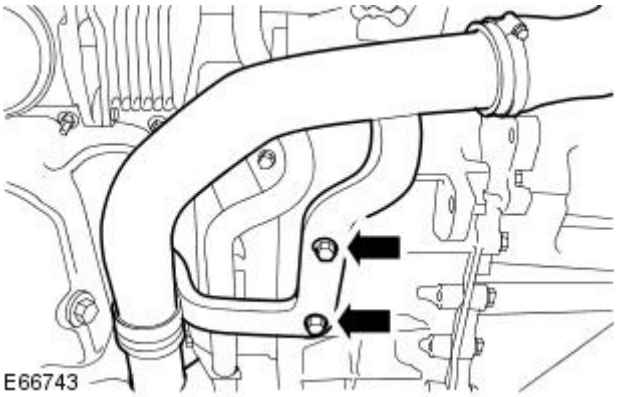

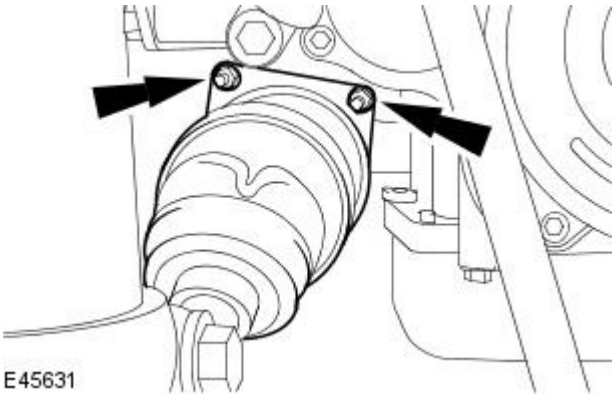

4. CAUTION: Make sure the halfshaft constant velocity (CV) joints do not over articulate. Failure to follow this instruction may result in damage to the CV joints.

Detach the right-hand halfshaft.

- Disengage the right-hand halfshaft from the transaxle.
- Secure the right-hand halfshaft to one side.

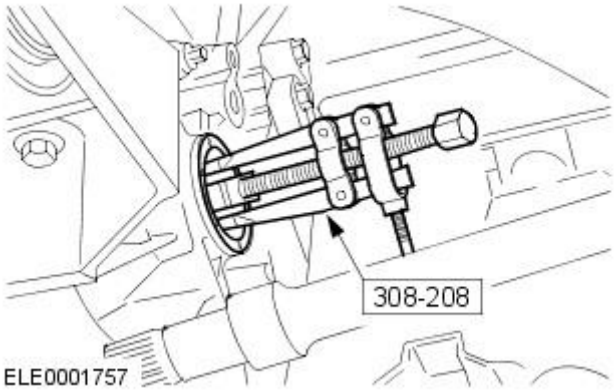

5. NOTE: Plug the transaxle to prevent fluid loss or dirt ingress.

Using the special tool, remove the right-hand halfshaft seal.

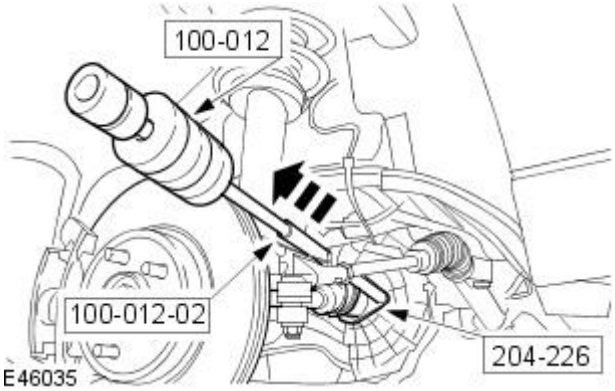

6. Using the special tools, detach the left-hand halfshaft.

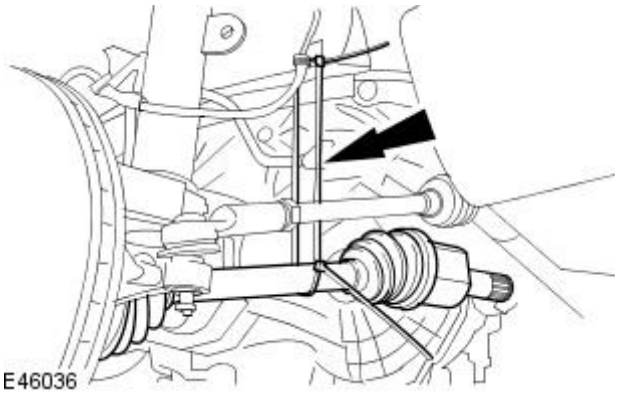

7. CAUTION: Make sure the halfshaft CV joints do not over articulate. Failure to follow this instruction may result in damage to the CV joints.

• NOTE: Secure the right-hand halfshaft using tie strap.

Support the left-hand halfshaft.

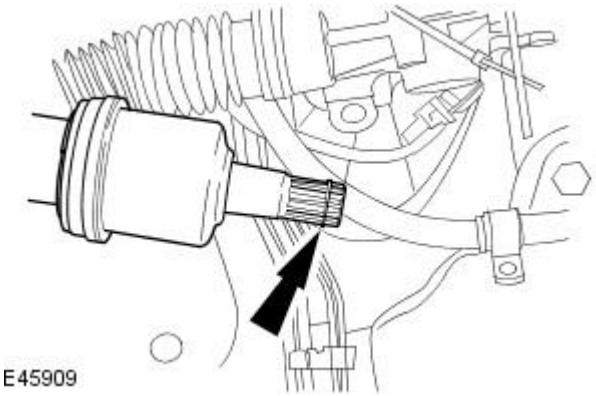

8. Remove and discard the left-hand halfshaft snap ring.

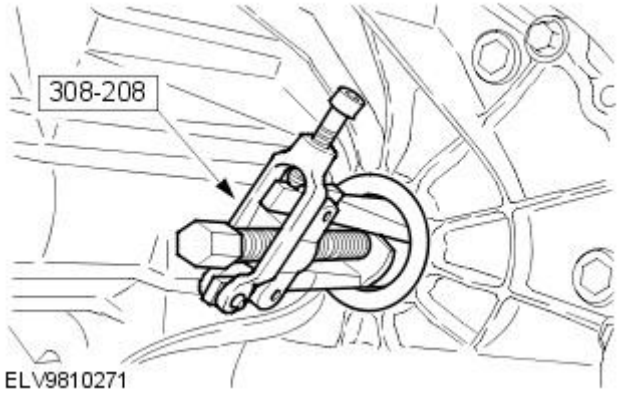

9. NOTE: Plug the transaxle to prevent fluid loss or dirt ingress.

Using the special tool, remove the left-hand halfshaft seal.

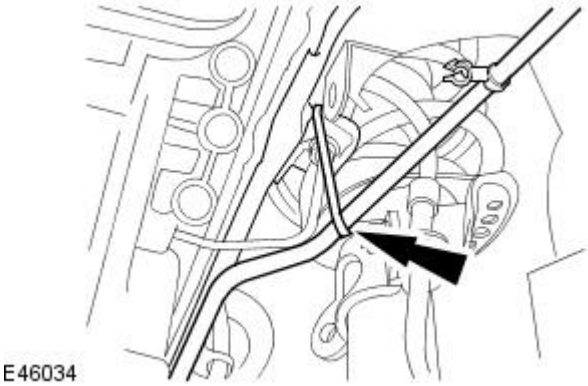

10. NOTE: Secure the power steering fluid pipe using tie straps.

Support the power steering fluid pipe.

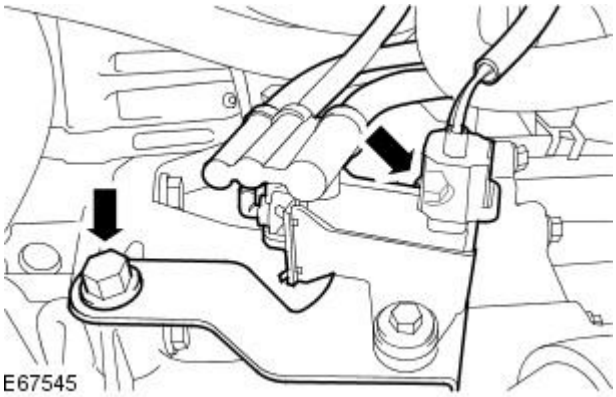

11. Detach the vacuum solenoid valve assembly.

- Remove the retaining bolts.
- Secure the vacuum solenoid valve assembly to one side.

12. Lower the vehicle.

13. Using the special tool, support the engine and transmission assembly.

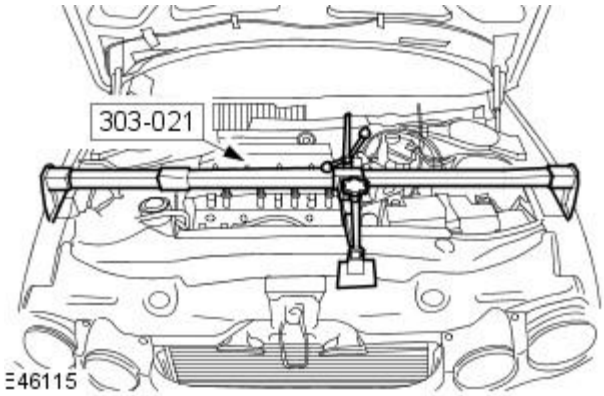

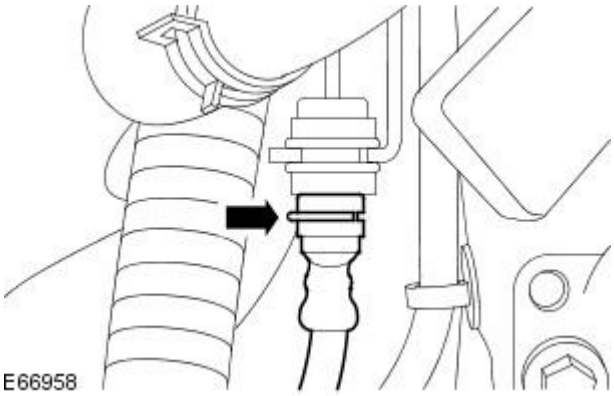

14. CAUTION: If brake fluid is split on the paintwork, the affected area must be washed down immediately with cold water. Failure to follow this instruction may result in damage to the vehicle.

Disconnect the clutch master cylinder to clutch slave cylinder high pressure hose from the clutch slave cylinder high pressure pipe.

- Install a suitable pipe clamp to the clutch master cylinder to clutch slave cylinder high pressure hose.

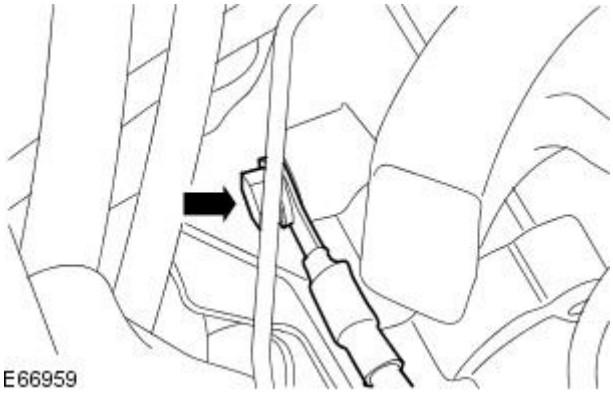

15. Detach the battery ground cable.

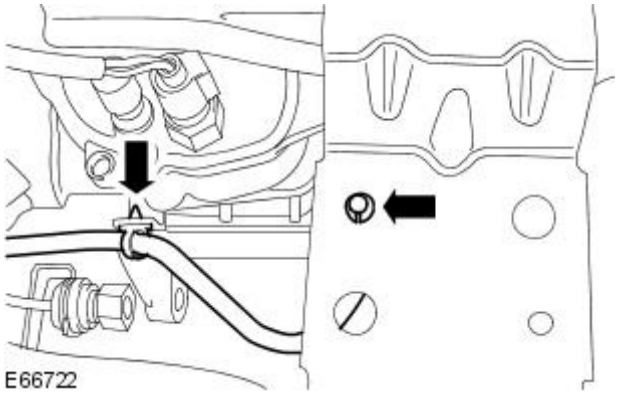

16. Detach the battery ground cable.

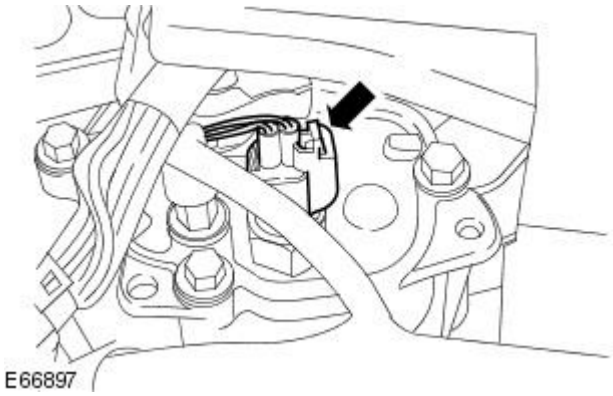

17. Disconnect the reverse lamp switch electrical connector.

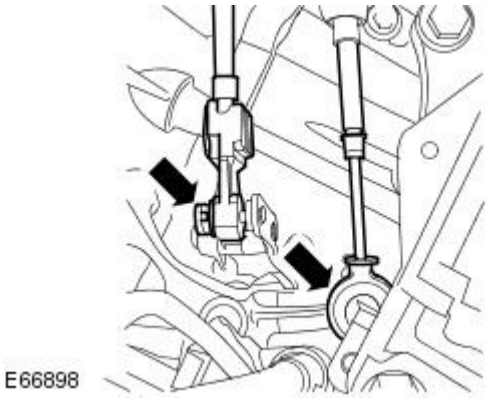

18. Detach the selector cables.

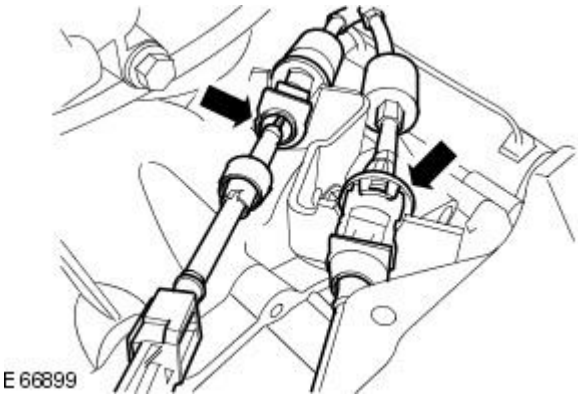

19. NOTE: Secure the selector cables using tie straps.

Detach the selector cables.

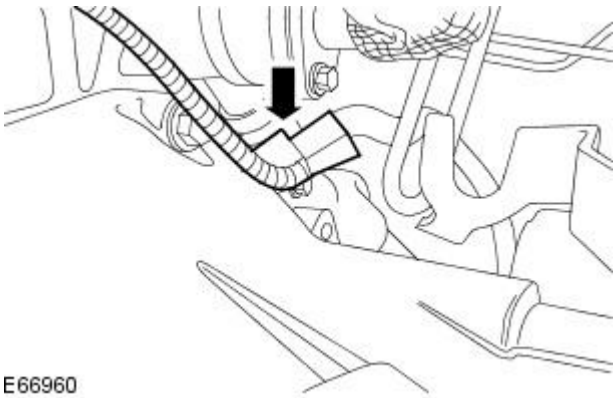

20. Disconnect the crankshaft position (CKP) sensor electrical connector.

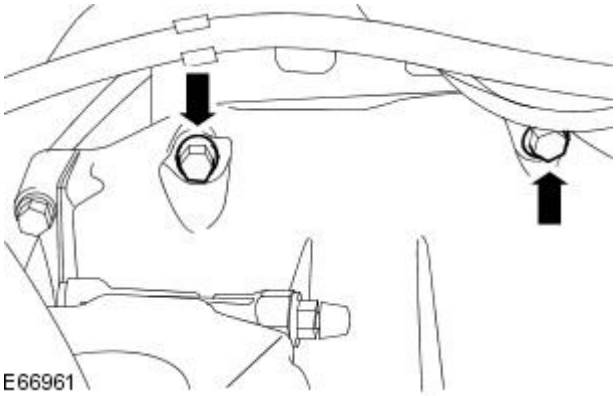

21. Remove the transaxle upper retaining bolts.

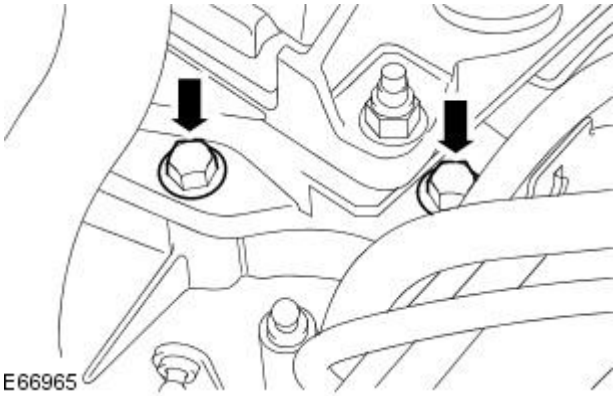

22. Remove the transaxle mount bracket retaining bolts.

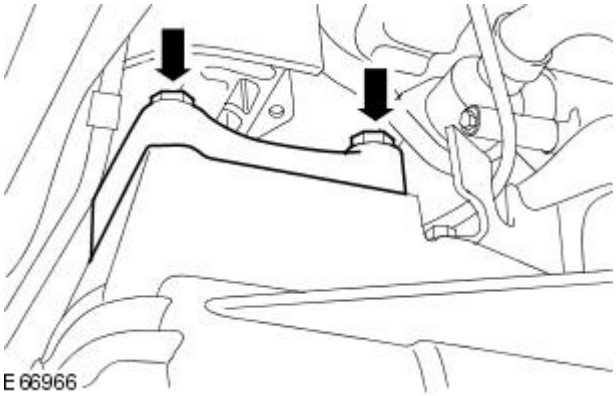

23. Detach the transaxle mount.

- Remove the transaxle mount bracket retaining bolts.

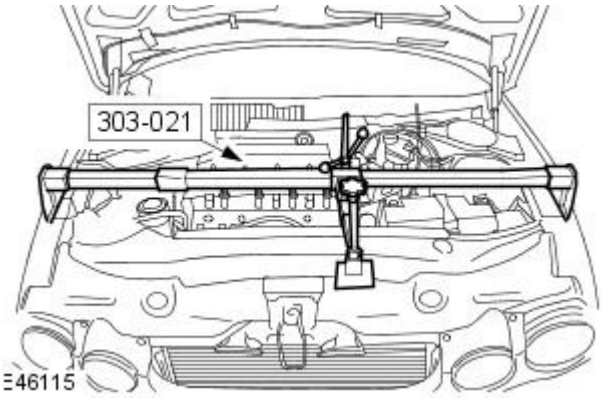

24. Using the special tool, lower the powertrain assembly approximately 60 mm (2.36 inches) between the transaxle and transaxle mount bracket.

25. Raise the vehicle.

26. Align the special tool to the transaxle.

- Secure the transaxle to the powertrain assembly jack.

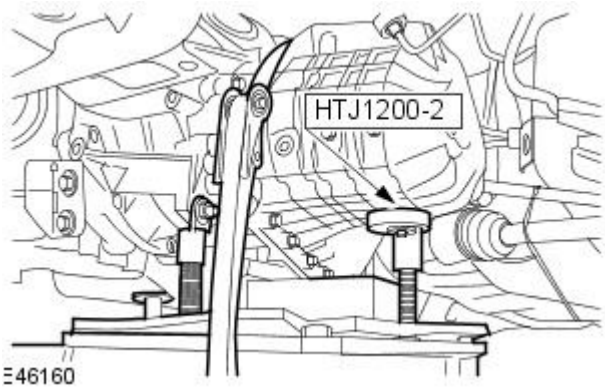

27. Detach the turbocharger oil feed pipe retaining bracket.

- Reposition the retaining bracket.

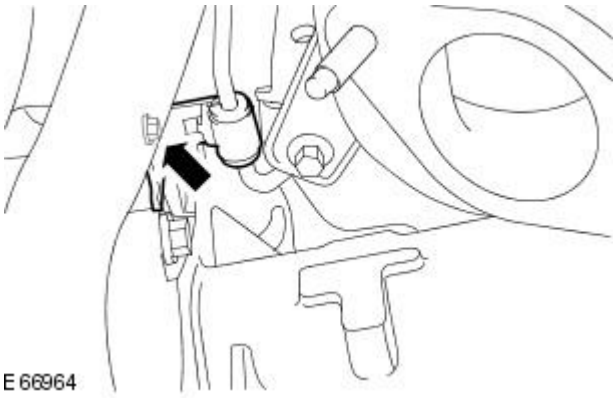

28. Remove the transaxle retaining bolts.

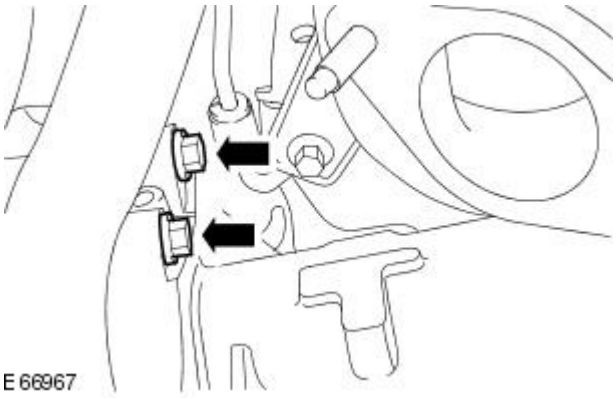

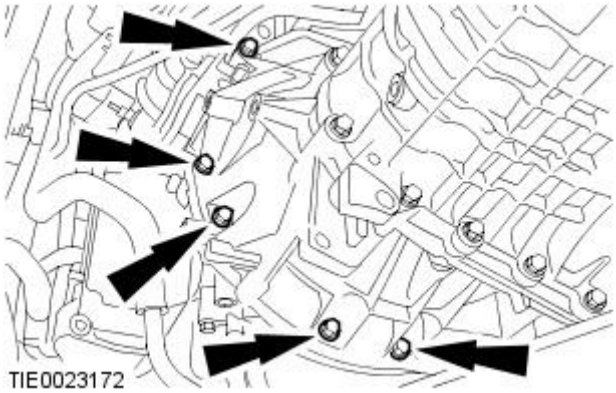

29. NOTE: Shown with the special tool removed for clarity.

Remove the transaxle retaining bolts.

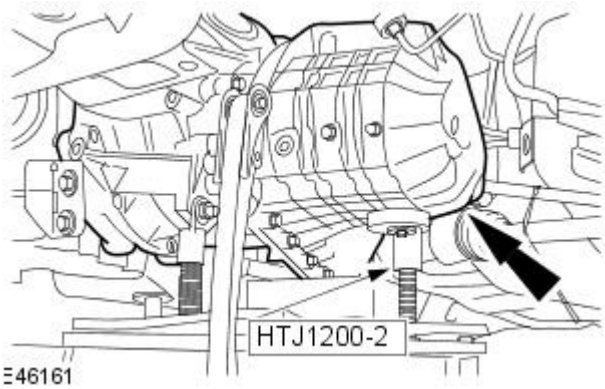

30. Using the special tool, remove the transaxle.

- Detach the transaxle from the clutch plate.
- Lower the powertrain assembly jack and transaxle assembly.

Manual Transmission / Transaxle - Transaxle2.0L NA V6 - AJV6 / 2.5L NA V6 - AJV6 / 3.0L NA V6 - AJ27

Removal

Special Tool(s)	
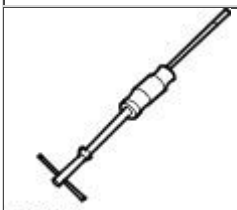 100012	Slide hammer 100-012
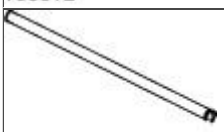 100-012-02	100-012-02 Slide hammer shaft
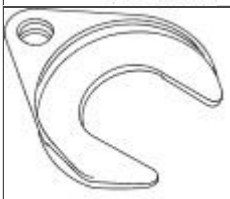 204-226	Halfshaft remover fork 204-226
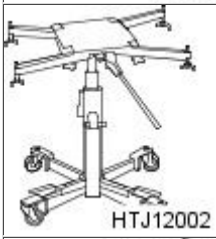 HTJ12002	Powertrain assembly jack HTJ1200-2
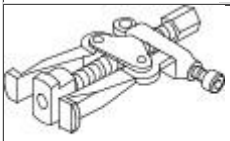 308-208	Pinion oil seal remover 308-208
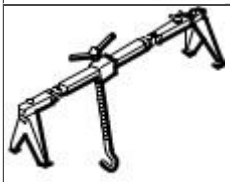 303-021	Engine support bracket 303-021
E46047	Engine support brackets 303-1068

Removal

All vehicles

1. Remove the battery tray.
   For additional information, refer to: Battery Tray (414-01 Battery, Mounting and Cables, Removal and Installation).
2. Remove the air cleaner.
   For additional information, refer to: Air Cleaner (303-12A Intake Air Distribution and Filtering - 2.0L NA V6 - AJV6/2.5L NA V6 - AJV6/3.0L NA V6 - AJ27, Removal and Installation).

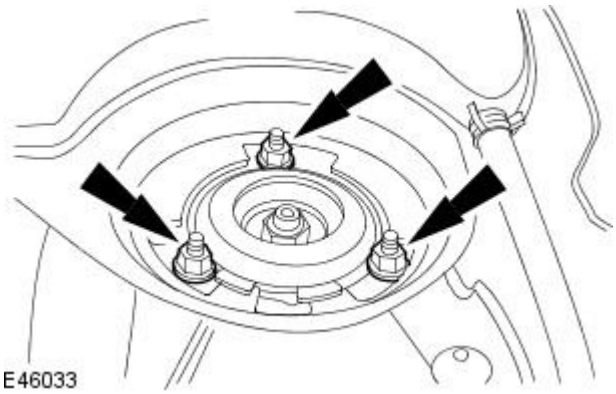

3. Loosen the left-hand shock absorber and spring assembly securing nuts.

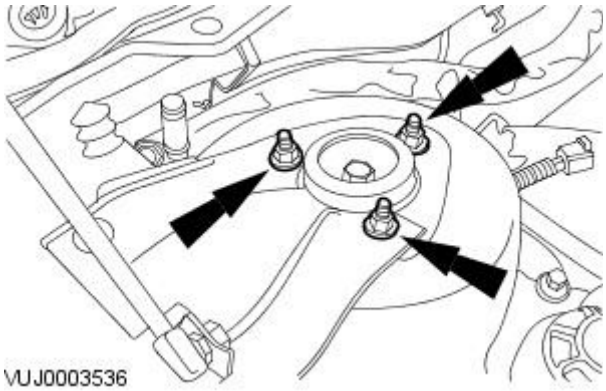

4. Loosen the right-hand shock absorber and spring assembly securing nuts.

5. Remove the front subframe.
For additional information, refer to: Front Subframe - 2.0L NA V6 - AJV6/2.5L NA V6 - AJV6/3.0L NA V6 - AJ27 (502-00 Uni-Body, Subframe and Mounting System, Removal and Installation).

6. Remove the fender splash shield access panel.

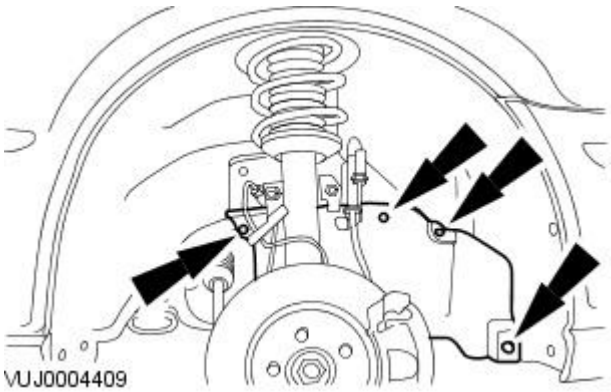

Vehicles with 2.5L or 3.0L engine

7. Remove the steering gear heat shield bracket.

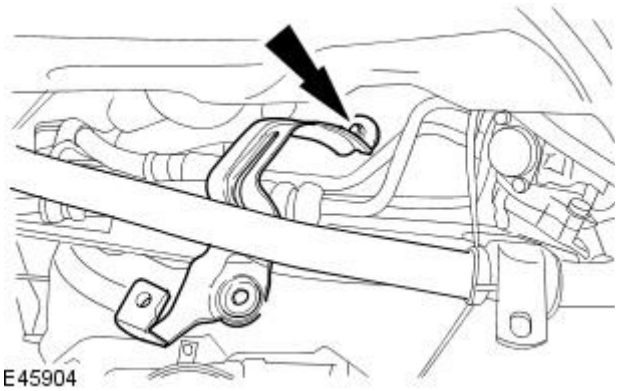

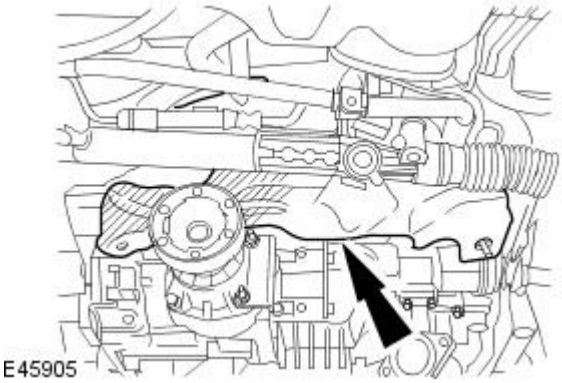

8. Remove the steering gear heat shield.

9. Remove the transfer case.
For additional information, refer to: Transfer Case (308-07 Transfer Case, Removal).

Vehicles with 2.0L engine

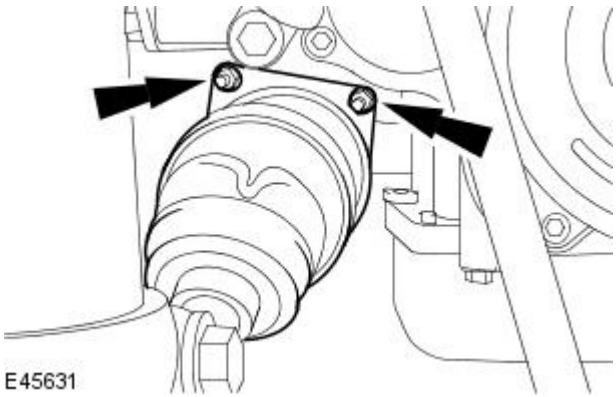

10. CAUTION: Make sure the halfshaft constant velocity (CV) joints do not over articulate. Failure to follow this instruction may result in damage to the CV joints.

Detach the right-hand halfshaft.

- Disengage the right-hand halfshaft from the transaxle.
- Secure the right-hand halfshaft to one side.

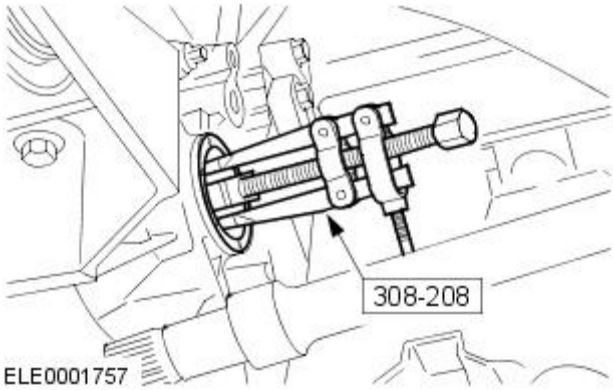

11. NOTE: Plug the transaxle to prevent fluid loss or dirt ingress.

Using the special tool, remove the halfshaft seal.

All vehicles

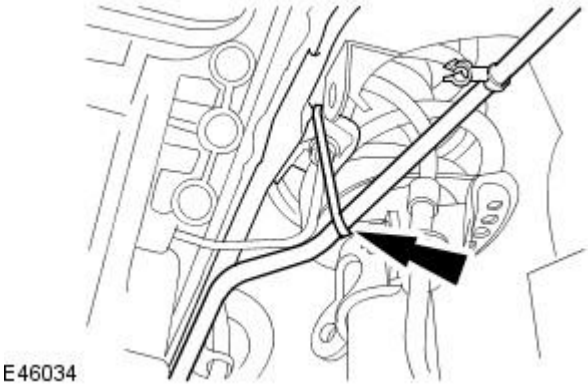

12. Support the power steering fluid pipe.

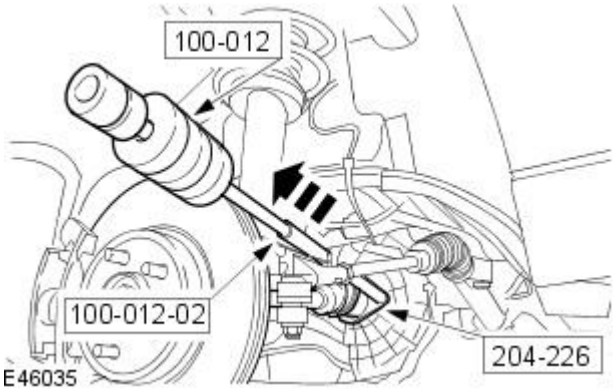

13. Using the special tools, detach the left-hand halfshaft.

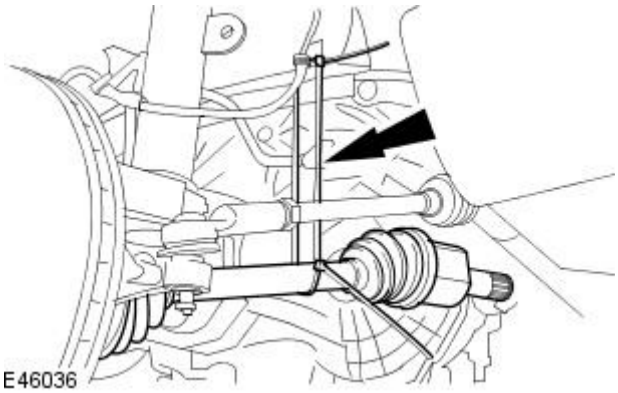

14. CAUTION: Make sure the halfshaft constant velocity (CV) joints do not over articulate. Failure to follow this instruction may result in damage to the CV joints.

Support the halfshaft.

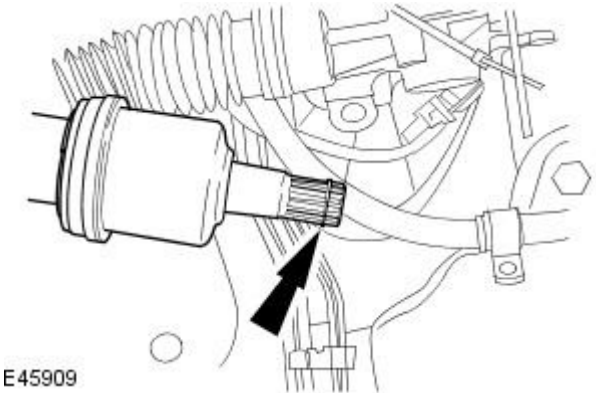

15. Remove and discard the halfshaft snap ring.

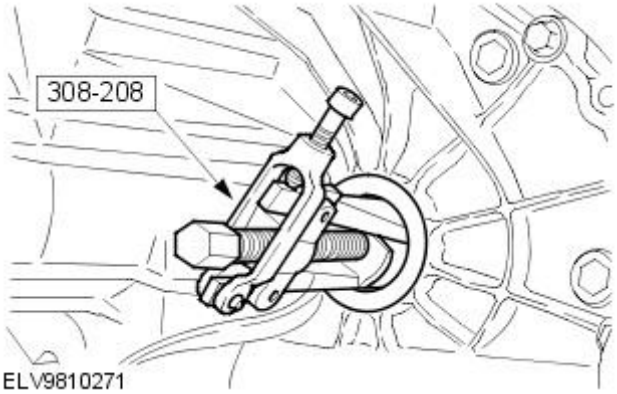

16. NOTE: Plug the transaxle to prevent fluid loss or dirt ingress.

Using the special tool, remove the halfshaft seal.

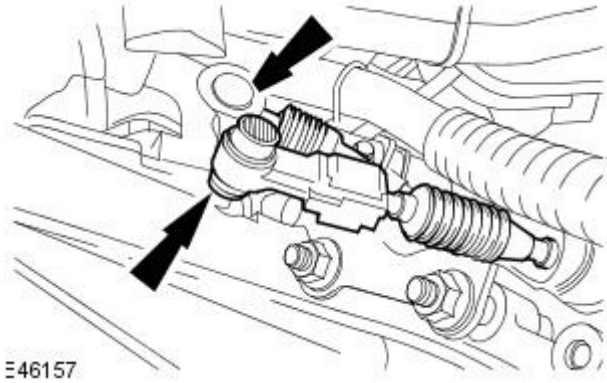

17. Detach the gearshift cables from the transaxle.

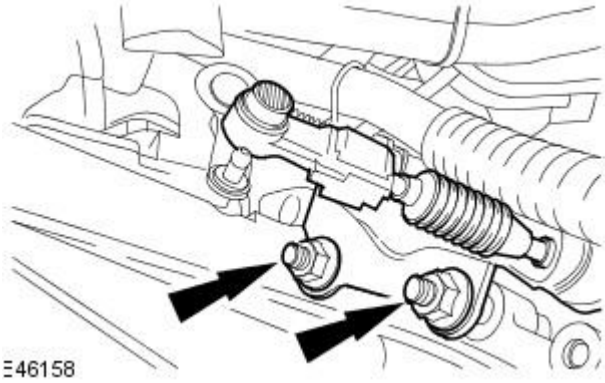

18. Detach the gearshift cable support bracket from the transaxle.

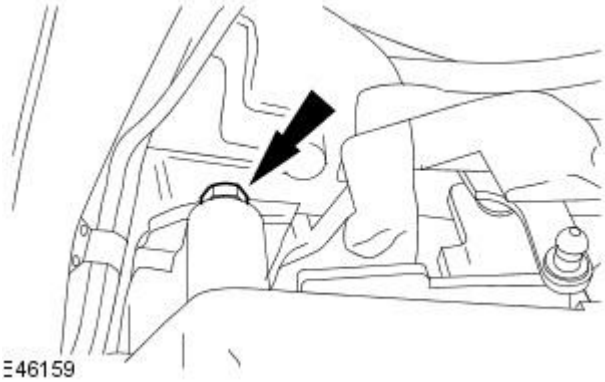

19. Remove the transaxle mount bracket retaining bolt.

20. Lower the vehicle.

21. Detach the generator wiring harness retaining clip from the camshaft cover retaining clip.

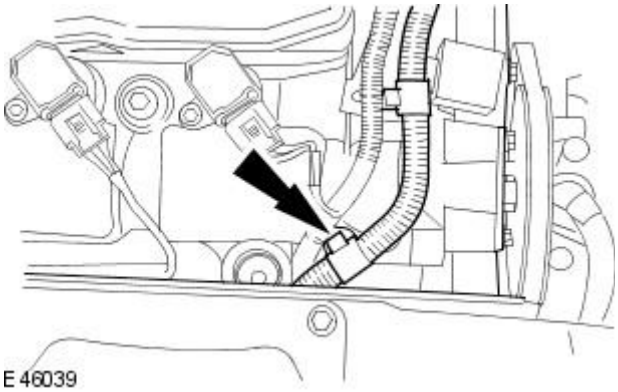

22. Remove the air cleaner mount bracket.

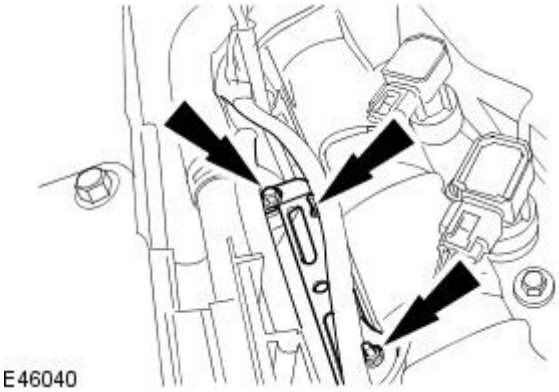

23. Install the engine support bracket.

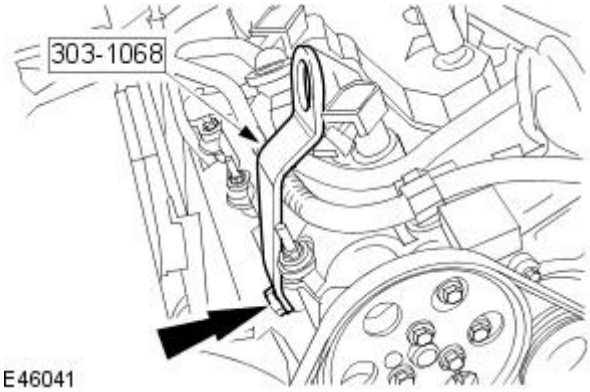

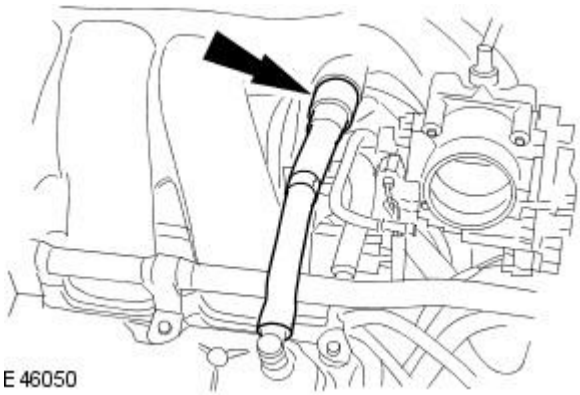

24. Detach the positive crankcase ventilation (PCV) hose from the intake manifold.

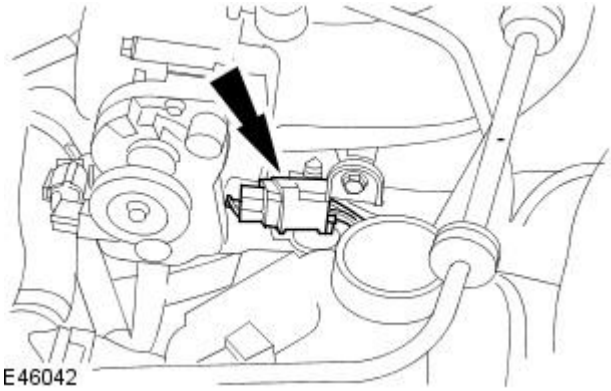

25. Detach the electrical connector from the intake manifold support bracket.

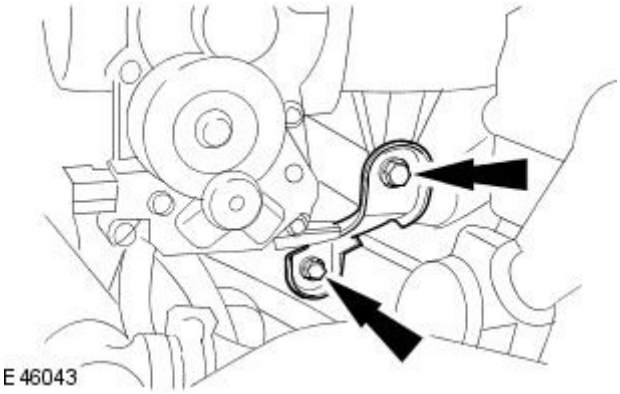

26. Remove the intake manifold support bracket.

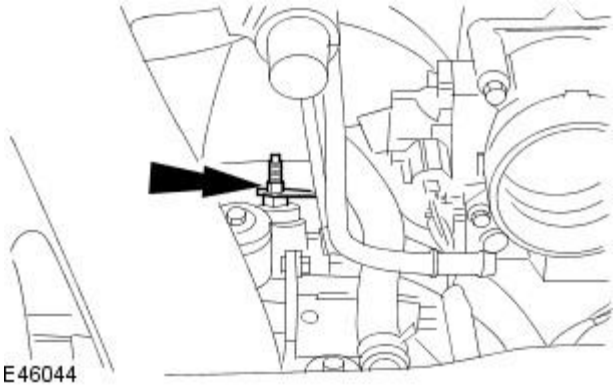

27. Detach the wiring harness from the camshaft cover retaining stud.

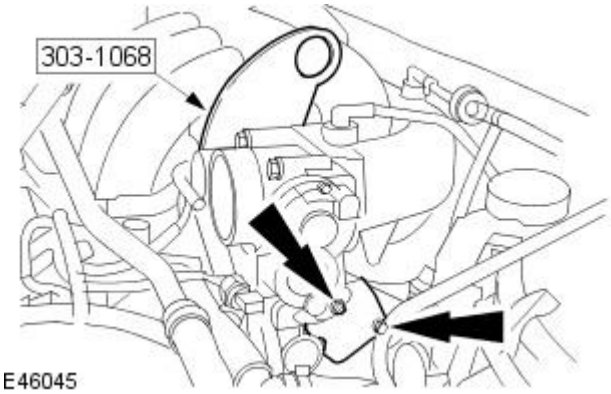

28. Install the engine support bracket.

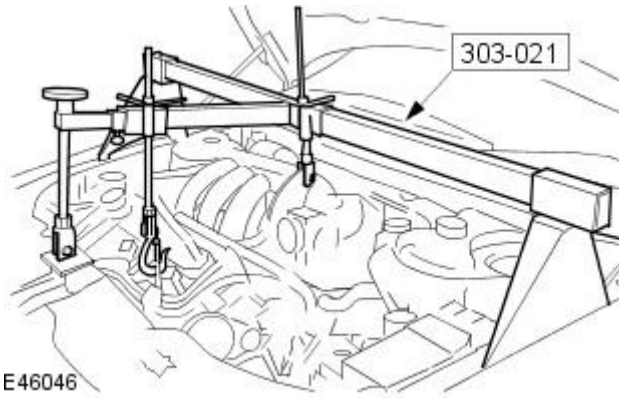

29. Install the engine support bracket.

- Adjust the engine support bracket to support the weight of the powertrain assembly.

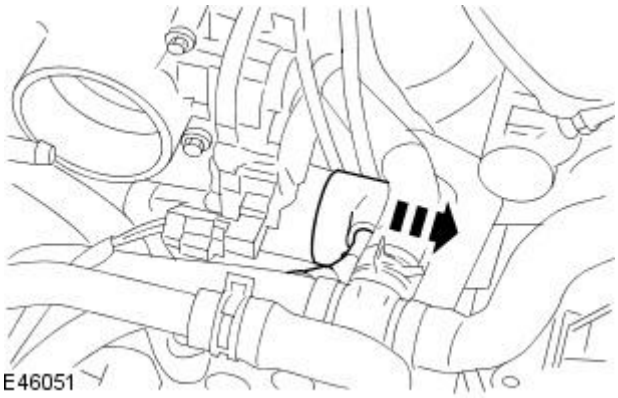

30. Detach the starter motor solenoid cover.

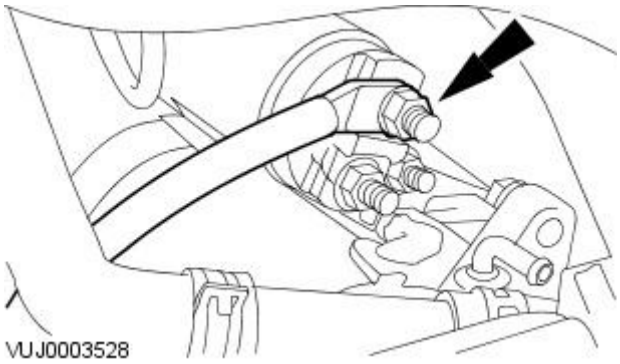

31. Detach the starter motor electrical connector.

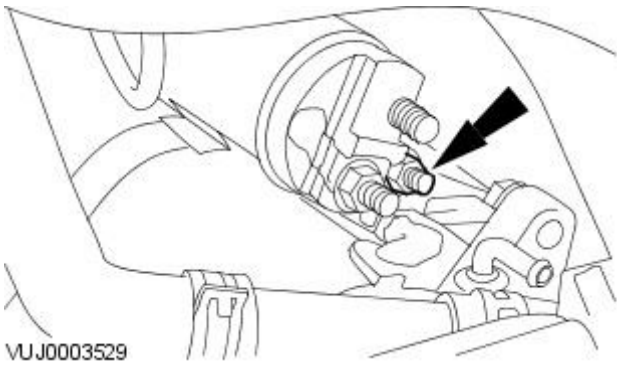

32. Detach the starter motor solenoid electrical connector.

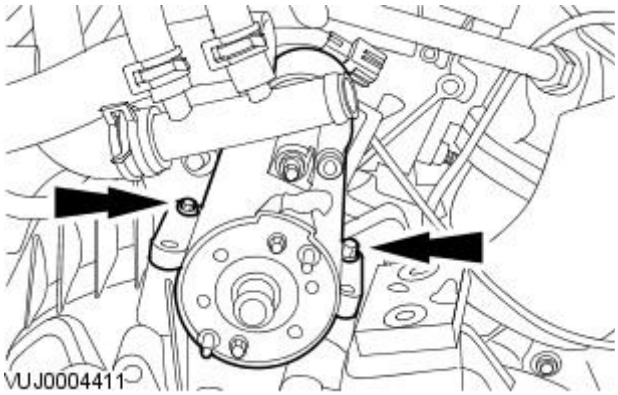

33. Remove the starter motor.

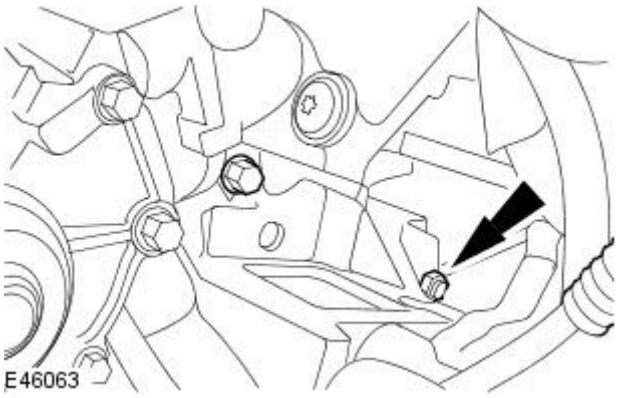

34. Remove the transaxle retaining bolt.

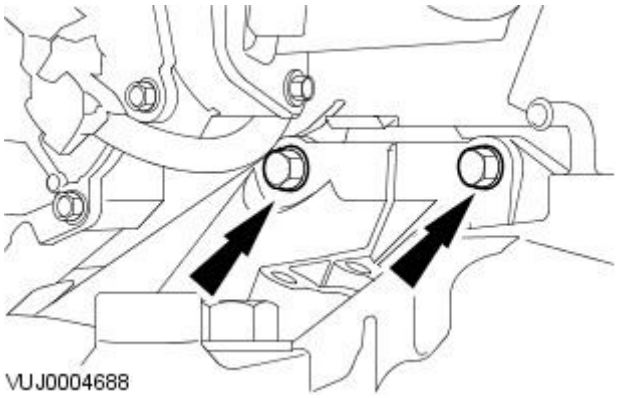

35. Remove the transaxle retaining bolts.

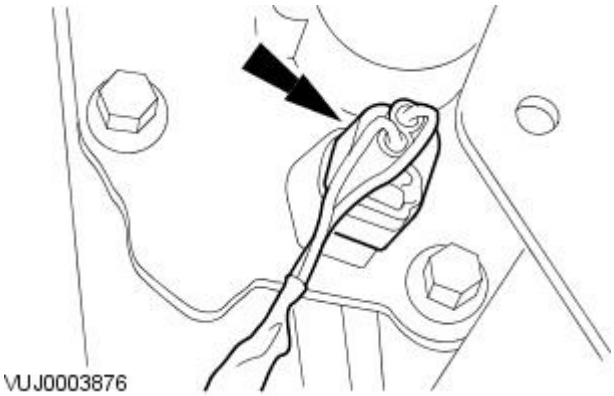

36. Disconnect the reverse lamp switch electrical connector.

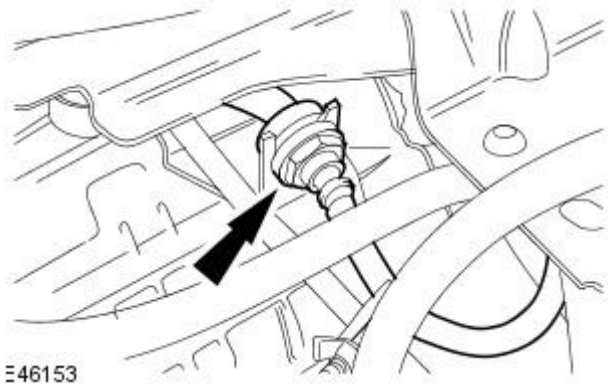

37. CAUTION: If brake fluid is split on the paintwork, the affected area must be washed down immediately with cold water. Failure to follow this instruction may result in damage to the vehicle.

Detach the clutch master cylinder to clutch slave cylinder high pressure pipe from the support bracket.

- Install a suitable pipe clamp to the clutch master cylinder to clutch slave cylinder high pressure pipe

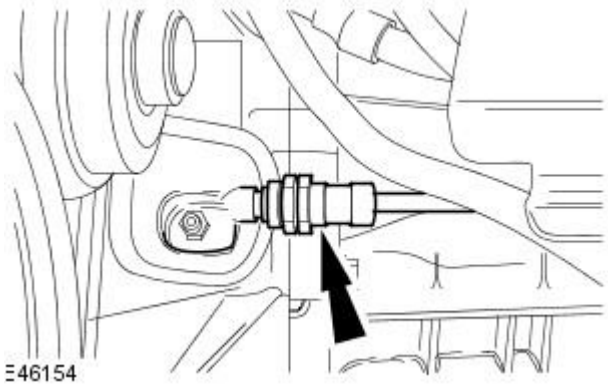

38. CAUTION: If brake fluid is split on the paintwork, the affected area must be washed down immediately with cold water. Failure to follow this instruction may result in damage to the vehicle.

Detach the clutch master cylinder to clutch slave cylinder high pressure pipe from the clutch slave cylinder.

- Remove the clutch master cylinder to clutch slave cylinder high pressure pipe retaining clip.

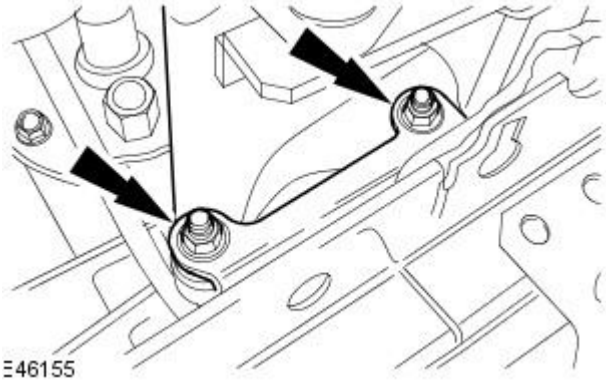

39. Remove the clutch master cylinder to clutch slave cylinder high pressure pipe support.

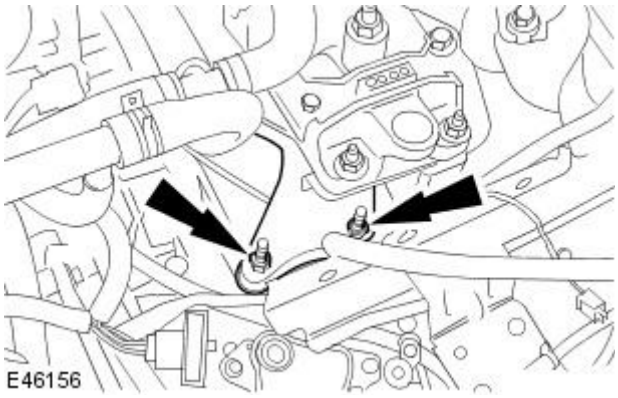

40. Remove the transaxle mount bracket securing studs.

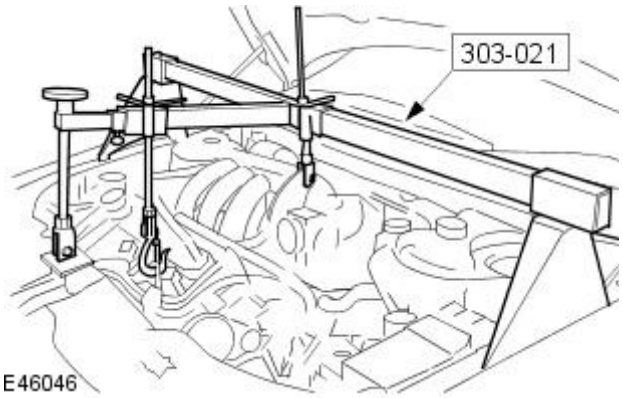

41. Using the engine support bracket lower the powertrain assembly approximately 60 mm between the transaxle and transaxle mount bracket.

42. Raise the vehicle.

43. NOTE: The transaxle retaining bolt remains captive to the cylinder block flange.

Remove the transaxle retaining nut.

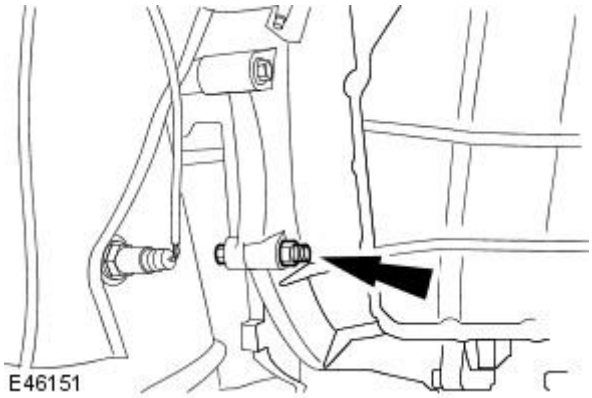

44. Remove the transaxle retaining bolts.

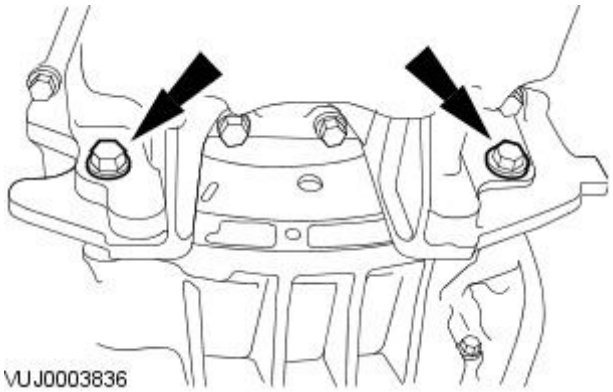

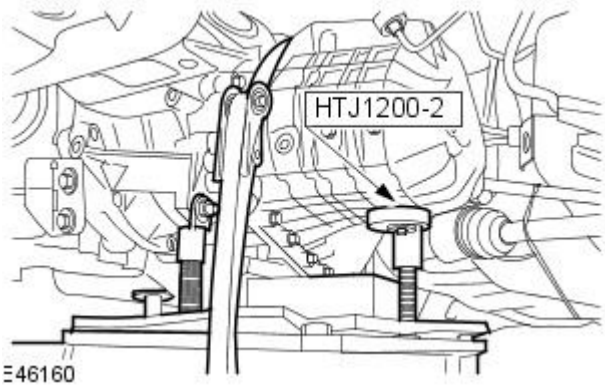

45. Align the powertrain assembly jack to the transaxle.

- Secure the transaxle to the powertrain assembly jack.

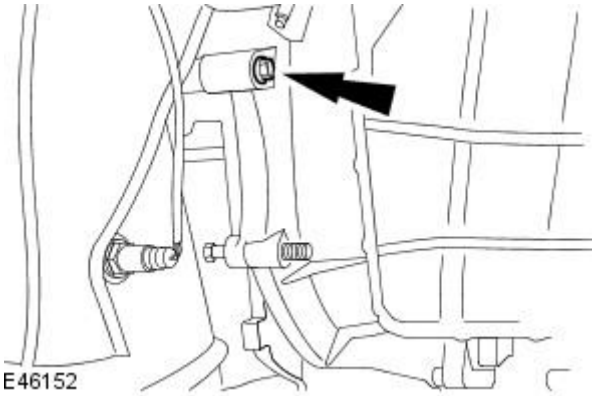

46. Remove the transaxle retaining bolt.

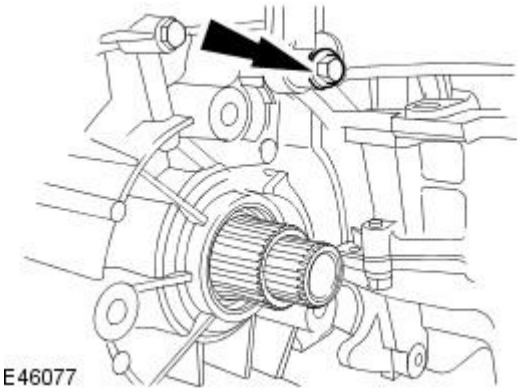

47. NOTE: Vehicles with 2.5L and 3.0L engines shown, vehicles with 2.0L engine similar.

Remove the transaxle retaining bolt.

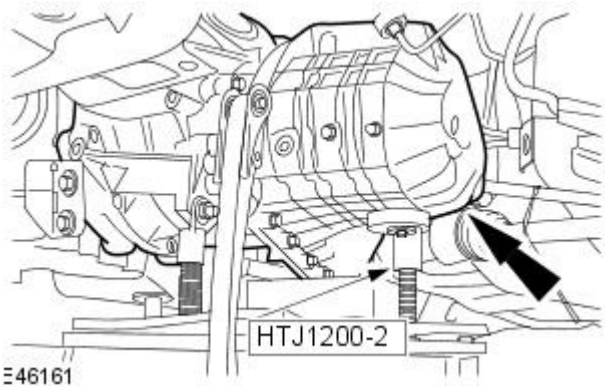

48. Remove the transaxle.

- Detach the transaxle from the clutch plate.
- Lower the powertrain assembly jack and transaxle assembly.

Manual Transmission / Transaxle - Transaxle2.0L Duratorq-TDCi

Installation

Special Tool(s)	
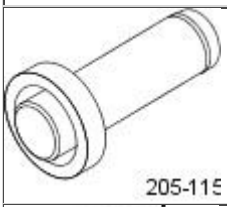	Halfshaft oil seal installer 205-115
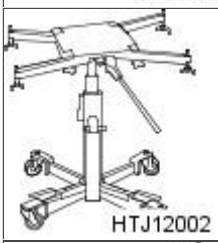	Powertrain assembly jack HTJ1200-2
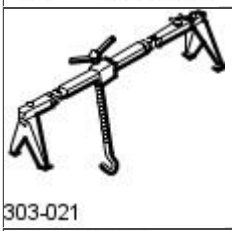	Engine support bracket 303-021
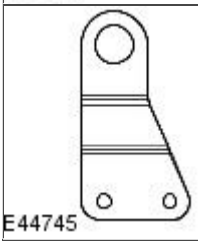	Engine lifting eye 303-1067

Installation

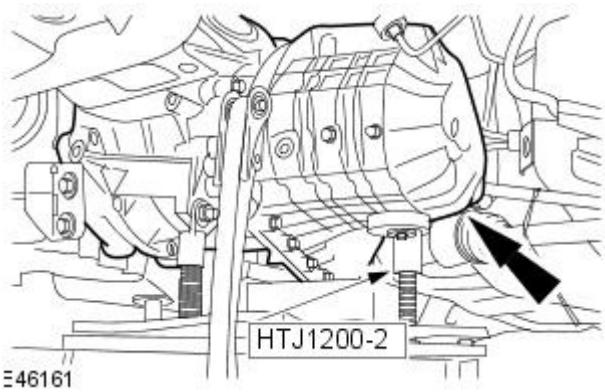

1. Install the transaxle.

- Raise the powertrain assembly jack and transaxle assembly.
- Align the transaxle to the clutch plate.

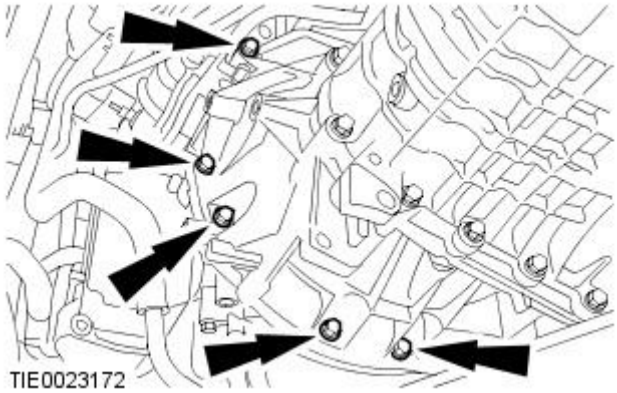

2. NOTE: Shown with the powertrain assembly jack removed for clarity.

Install the transaxle retaining bolts.

- Tighten to 48 Nm.

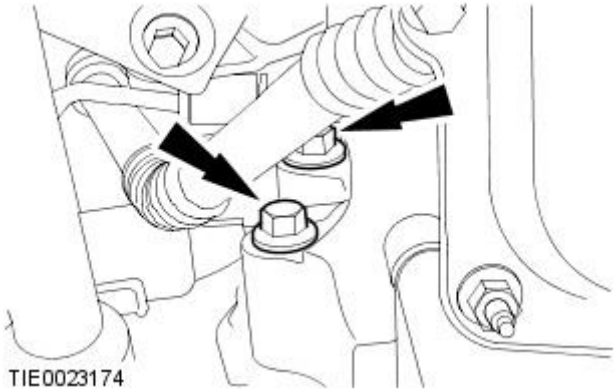

3. Install the transaxle retaining bolts.

- Tighten to 48 Nm.

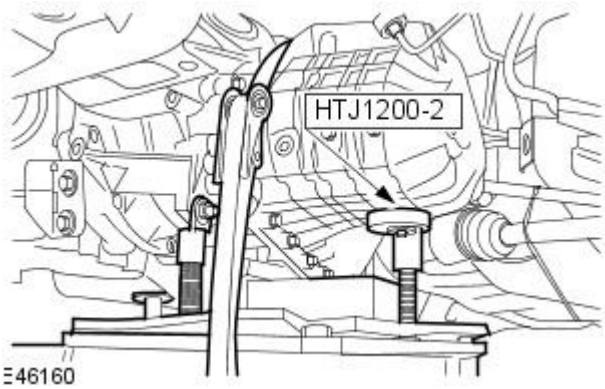

4. Remove the powertrain assembly jack.

- Remove the transaxle to the powertrain assembly jack securing strap.

5. Lower the vehicle.

6. Using the engine support bracket raise the powertrain assembly.

- Adjust the engine support bracket to align the transaxle to the transaxle mount bracket.

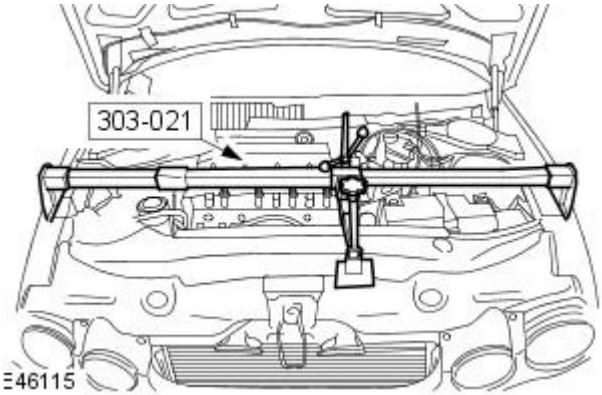

7. NOTE: Shown from under the vehicle for clarity.

Loosely install the transaxle mount bracket retaining bolt.

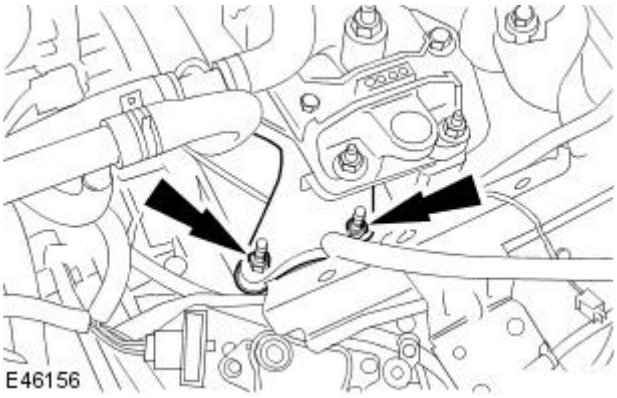

8. Install the transaxle mount bracket retaining studs.

- Tighten to 80 Nm.

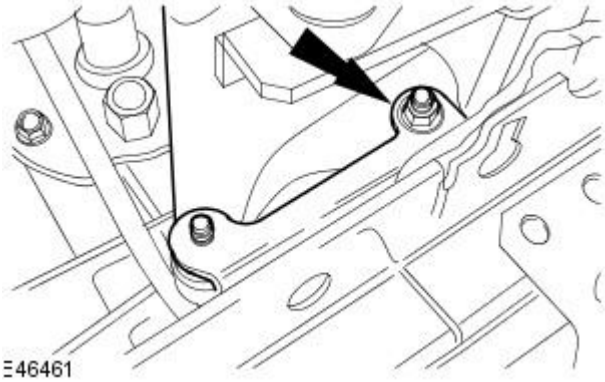

9. Install the clutch master cylinder to clutch slave cylinder high pressure pipe support bracket.

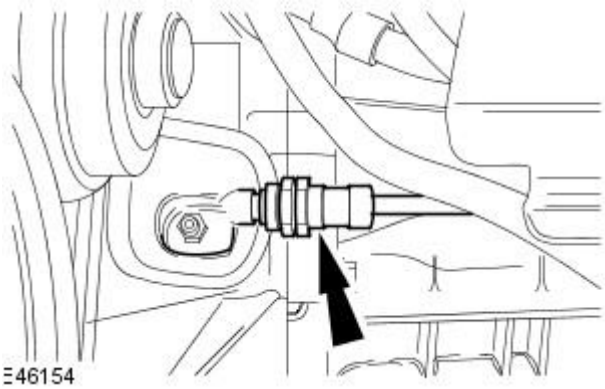

10. CAUTION: If brake fluid is split on the paintwork, the affected area must be washed down immediately with cold water. Failure to follow this instruction may result in damage to the vehicle.

Attach the clutch master cylinder to clutch slave cylinder high pressure pipe to the clutch slave cylinder.

- Install the clutch master cylinder to clutch slave cylinder high pressure pipe retaining clip.

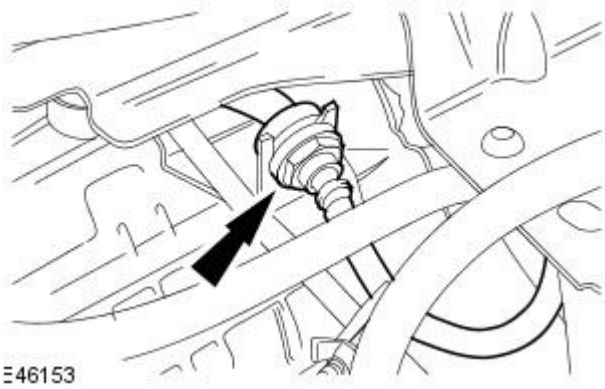

11. Attach the clutch master cylinder to clutch slave cylinder high pressure pipe to the support bracket.

- Remove the pipe clamp from the clutch master cylinder to clutch slave cylinder high pressure pipe.

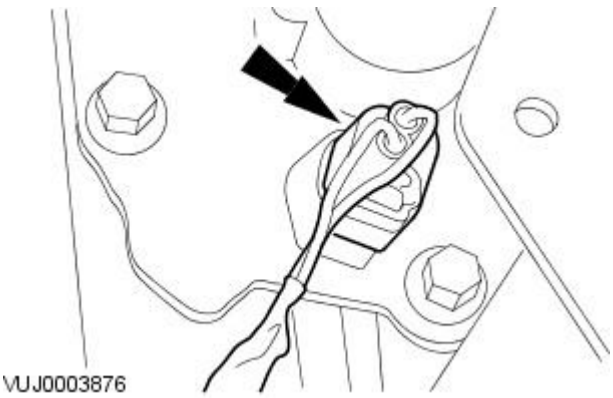

12. Connect the reverse lamp switch electrical connector.

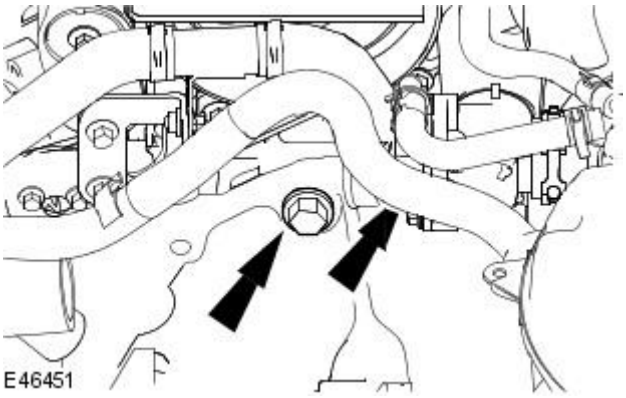

13. Install the transaxle upper retaining bolts.

- Tighten to 48 Nm.

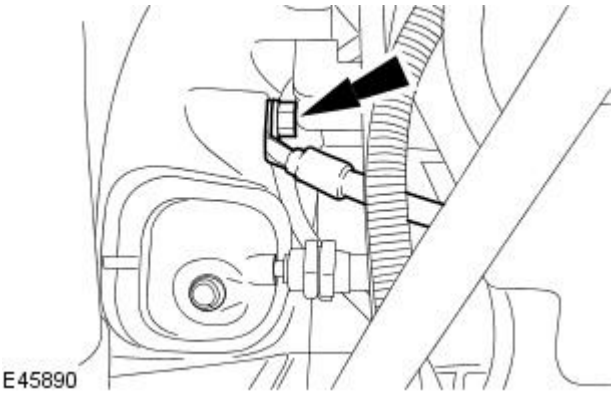

14. Attach the transaxle ground cable.

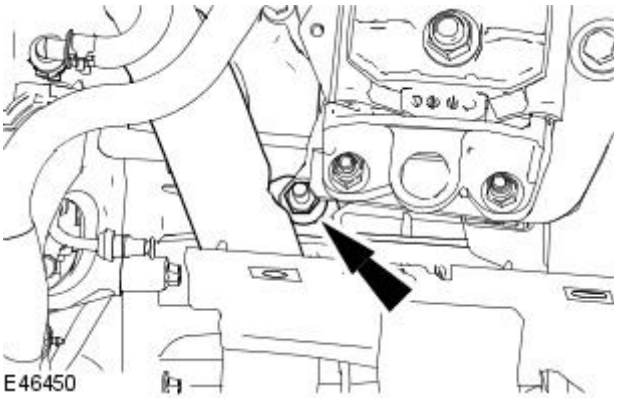

15. Attach the charge air cooler pipe retaining nut.

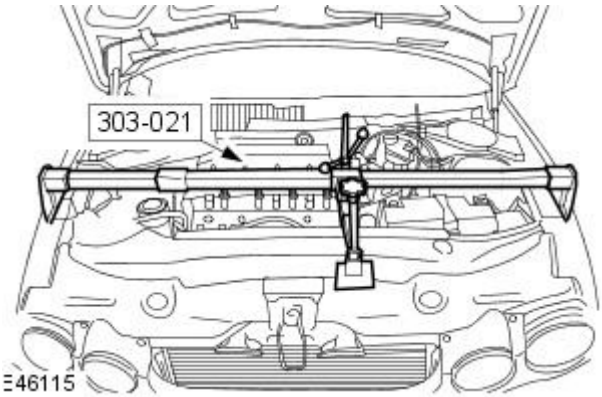

16. Remove the engine support bracket.

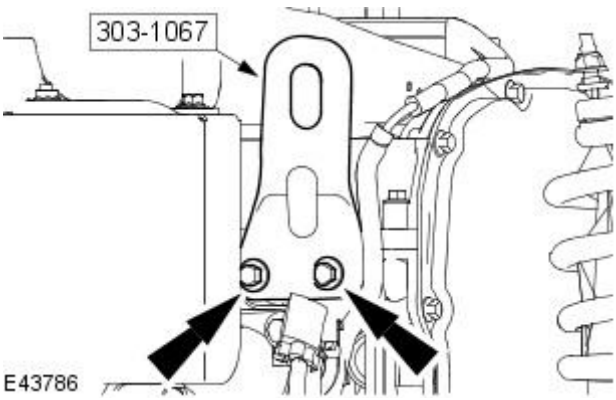

17. Remove the special tool.

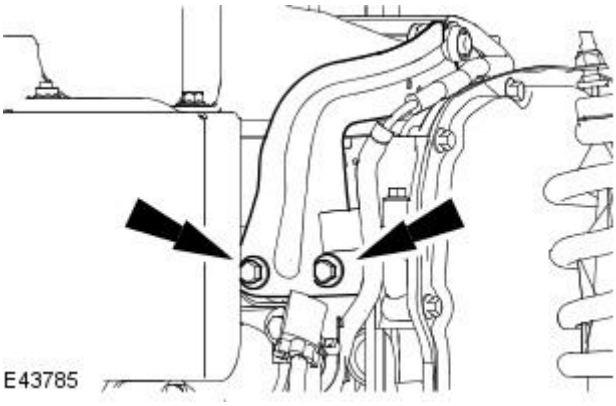

18. Install the engine cover rear mount bracket.

- Tighten to 23 Nm.

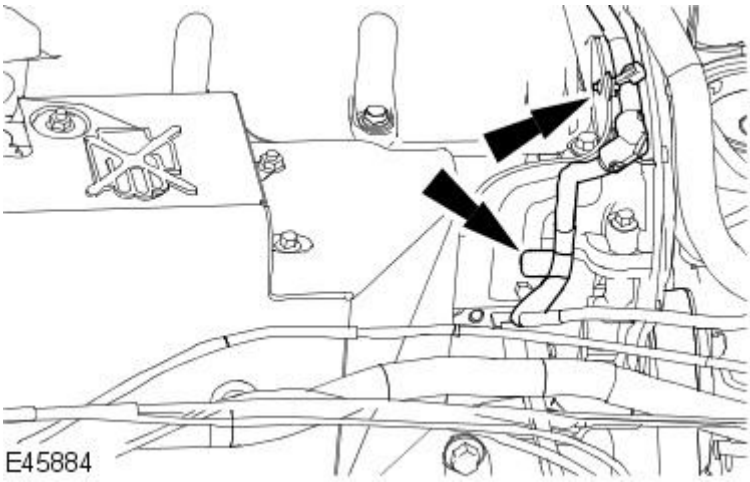

19. Attach the generator and starter motor positive cable from the engine cover mounting bracket.

20. Raise the vehicle.

21. Tighten the transaxle mount bracket retaining bolt.

- Tighten to 80 Nm.

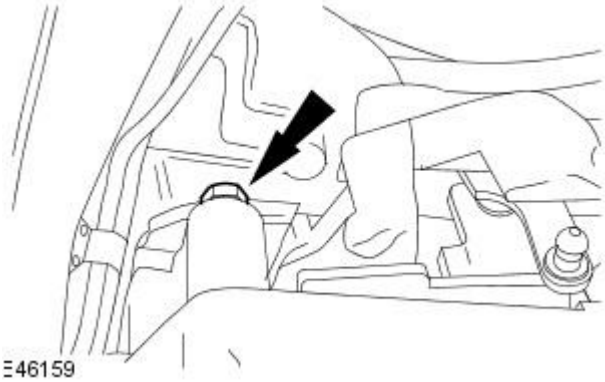

22. Attach the gearshift cable support bracket to the transaxle.

- Tighten to 25 Nm.

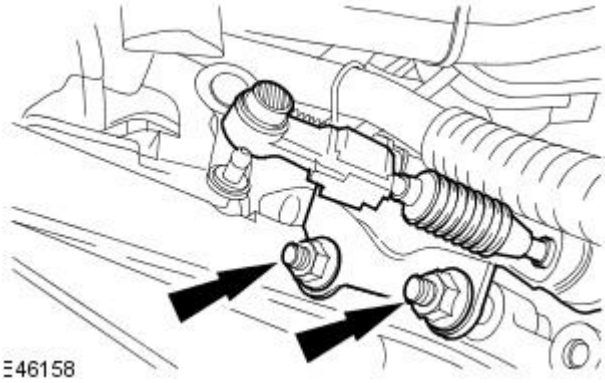

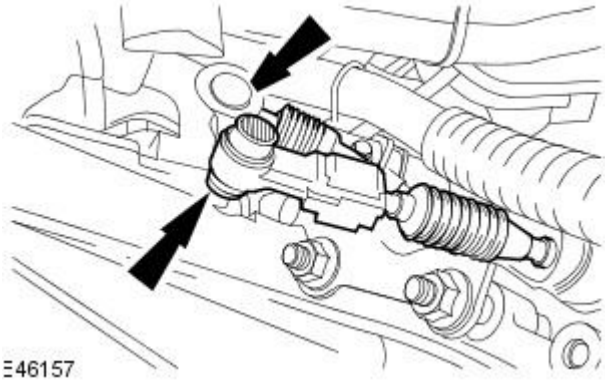

23. Attach the gearshift cables to the transaxle.

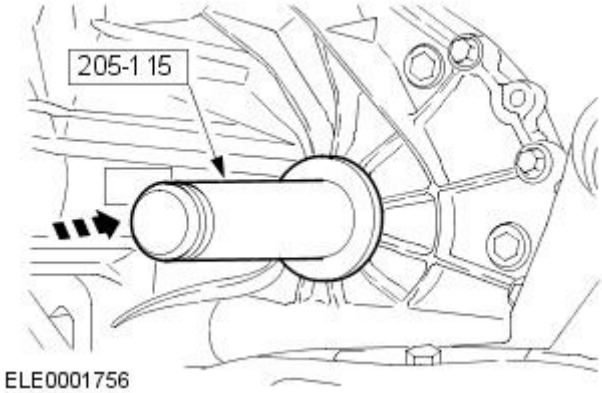

24. NOTE: Remove the transaxle plug.

Using the special tool, install a new right-hand halfshaft seal.

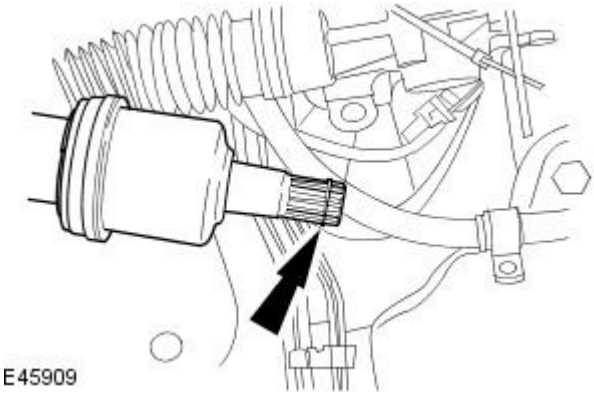

25. Install a new right-hand halfshaft snap ring.

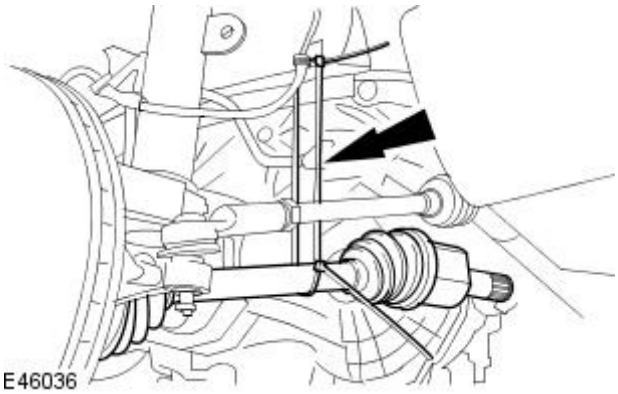

26. CAUTION: Make sure the halfshaft constant velocity (CV) joints do not over articulate. Failure to follow this instruction may result in damage to the CV joints.

Detach the right-hand halfshaft.

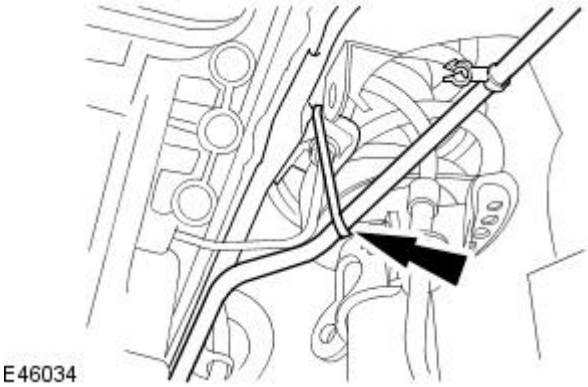

27. Detach the power steering fluid pipe.

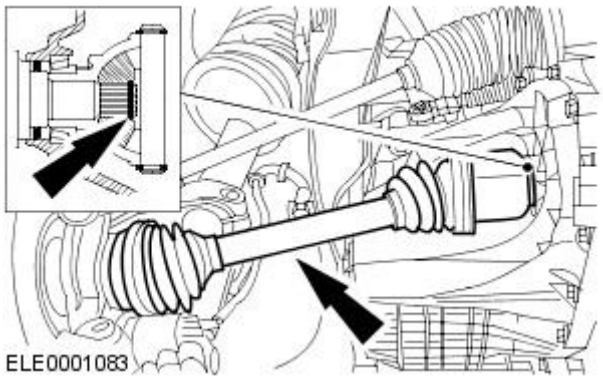

28. CAUTIONS:

Make sure the halfshaft CV joints do not over articulate. Failure to follow this instruction may result in damage to the CV joints.

Make sure the halfshaft seal is not damaged. Failure to follow this instruction may result in an transaxle fluid leak.

Attach the right-hand halfshaft to the transaxle.

- Make sure the halfshaft snap ring is correctly seated.

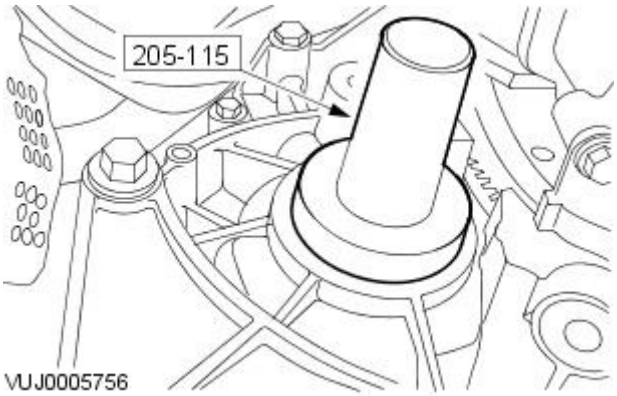

29. NOTE: Remove the transaxle plug.

Using the special tool, install a new left-hand halfshaft seal.

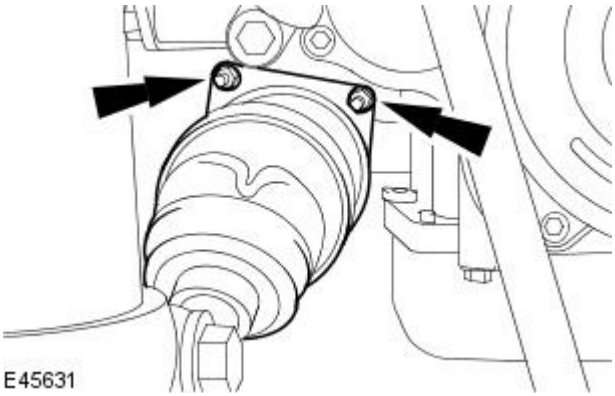

30. CAUTION: Make sure the halfshaft CV joints do not over articulate. Failure to follow this instruction may result in damage to the CV joints.

Attach the left-hand halfshaft.

- Engage the left-hand halfshaft to the transaxle.
- Tighten to 25 Nm.

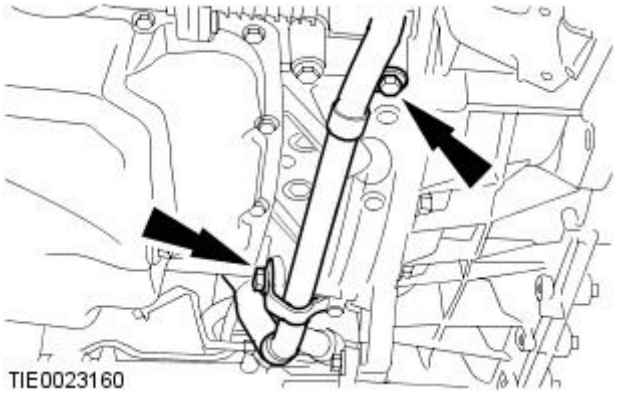

31. Attach the coolant pipe to the engine.

- Tighten to 40 Nm.

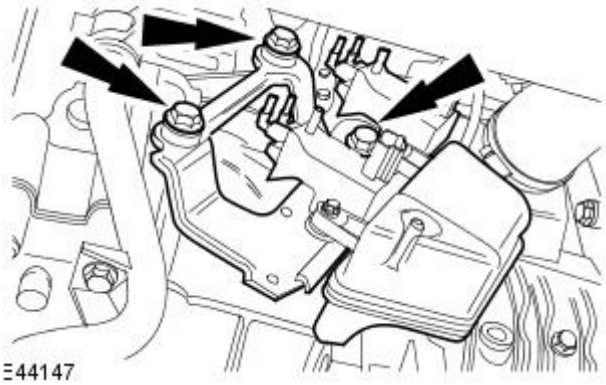

32. Install the vacuum solenoids and vacuum reservoir mount bracket assembly.

- Tighten to 23 Nm.

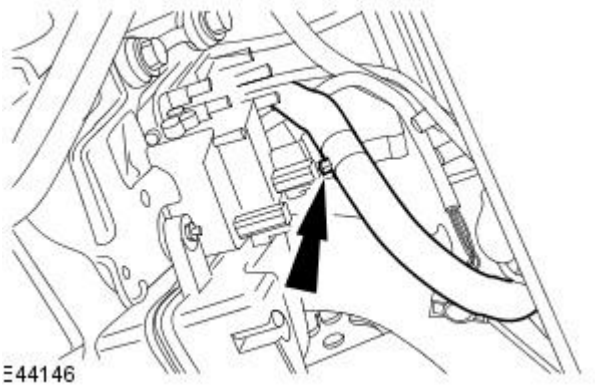

33. Attach the wiring harness to the vacuum solenoids and vacuum reservoir mount bracket.

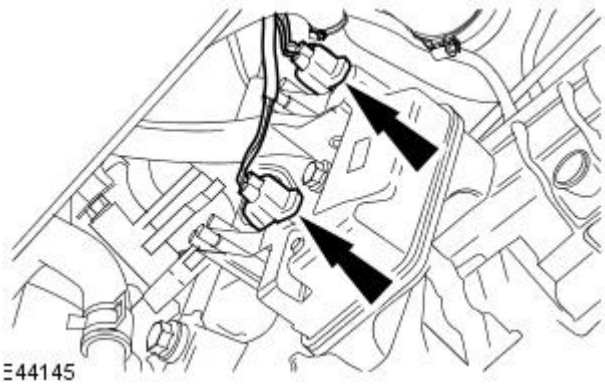

34. Connect the vacuum solenoid valves electrical connectors.

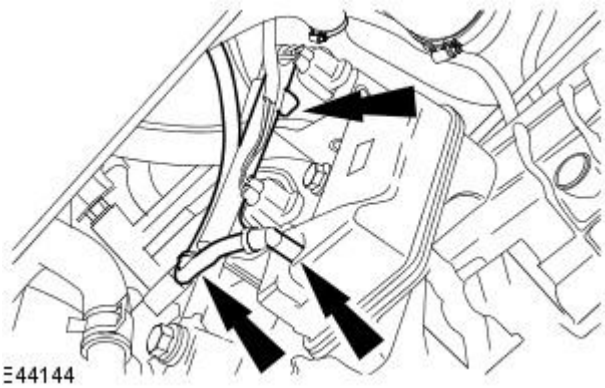

35. Connect the vacuum pipes to the vacuum solenoid valves and the vacuum reservoir.

36. Install the front subframe.
For additional information, refer to: Front Subframe - 2.0L Duratorq-TDCi/2.2L Duratorq-TDCi (110kW/150PS) - Puma (502-00 Uni-Body, Subframe and Mounting System, Removal and Installation).

37. NOTE: Left-hand shown, right-hand similar.

Tighten the shock absorber and spring assembly securing nuts.

- Tighten to 25 Nm.

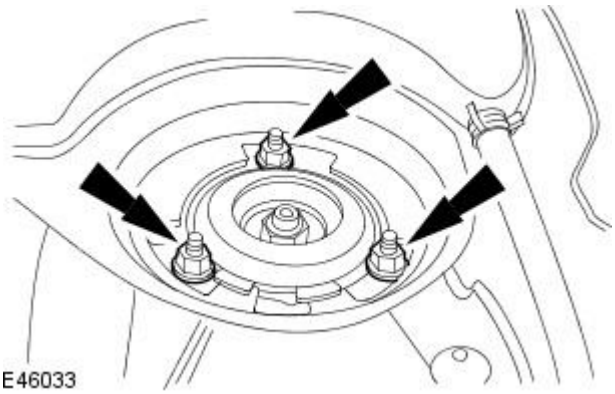

38. Install the air cleaner.
For additional information, refer to: Air Cleaner (303-12B Intake Air Distribution and Filtering - 2.0L Duratorq-TDCi/2.2L Duratorq-TDCi (110kW/150PS) - Puma, Removal and Installation).

39. Install the battery tray.
For additional information, refer to: Battery Tray (414-01 Battery, Mounting and Cables, Removal and Installation).

40. Fill the manual transaxle to the correct oil level.
For additional information, refer to: Transaxle Draining and Filling - Vehicles With: 6-Speed Manual Transaxle - MMT6 (308-03 Manual Transmission/Transaxle, General Procedures).

Manual Transmission / Transaxle - Transaxle2.2L Duratorq-TDCi (110kW / 150PS) - Puma

Installation

Special Tool(s)	
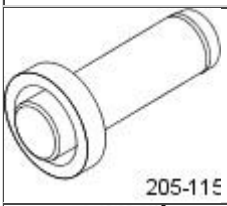	Halfshaft oil seal installer 205-115
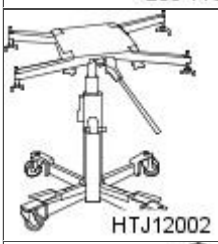	Powertrain assembly jack HTJ1200-2
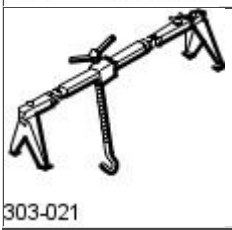	Engine support bracket 303-021

Installation

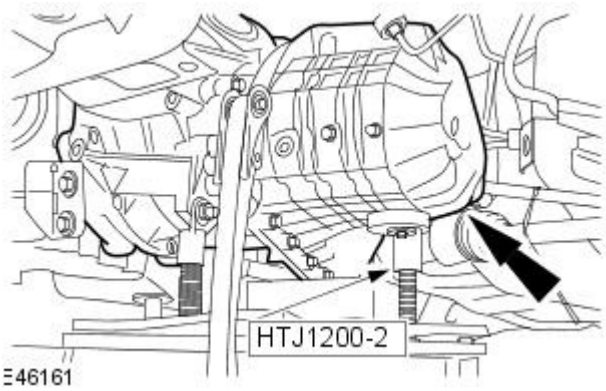

1. Using the special tool, install the transaxle.

- Using the special tool raise the transaxle assembly.
- Align the transaxle to the clutch plate.

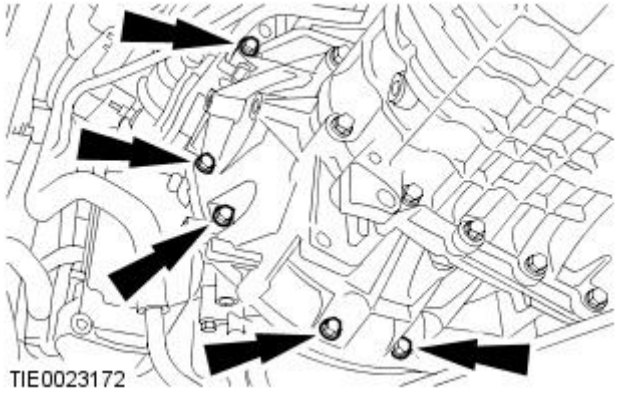

2. NOTE: Shown with the special tool removed for clarity.

Install the transaxle retaining bolts.

- Tighten to 48 Nm.

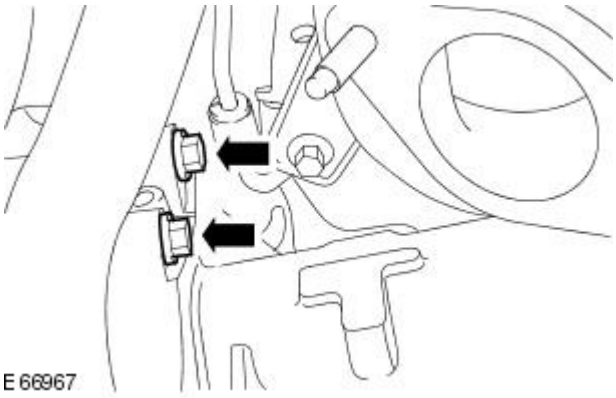

3. Install the transaxle retaining bolts.

- Tighten to 48 Nm.

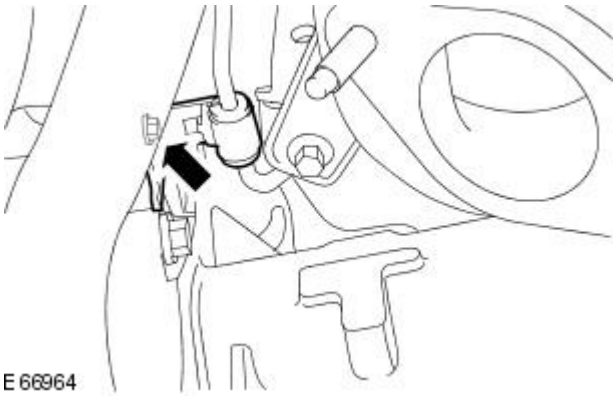

4. Attach the turbocharger oil feed pipe retaining bracket.

- Tighten to 22 Nm.

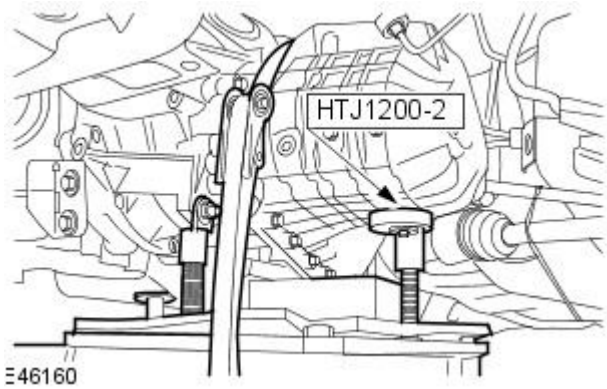

5. Remove the special tool.

- Remove the special tool securing strap.

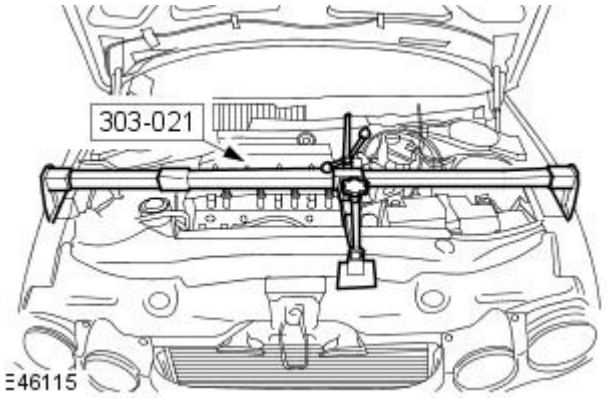

6. Lower the vehicle.

7. Using the special tool raise the powertrain assembly.

- Adjust the engine support bracket to align the transaxle to the transaxle mount bracket.

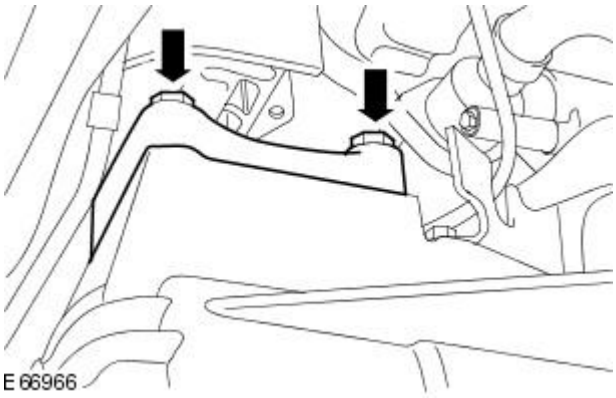

8. Loosely install the transaxle mount bracket retaining bolts.

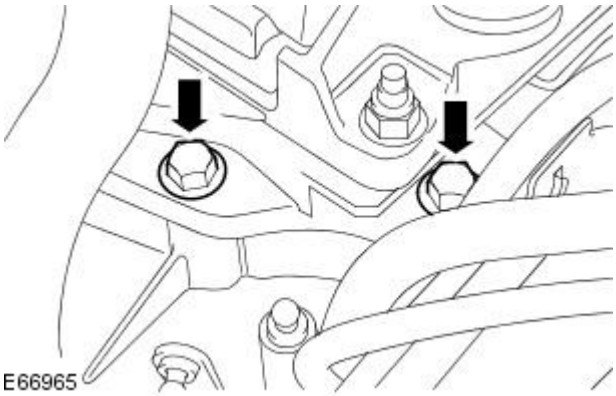

9. Install the transaxle mount bracket retaining bolts.

- Tighten to 80 Nm.

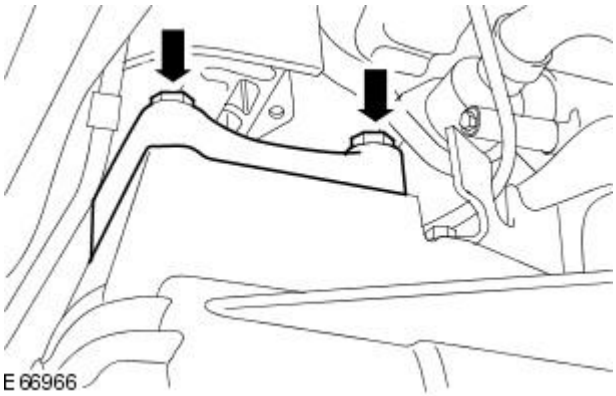

10. Tighten to 80 Nm.

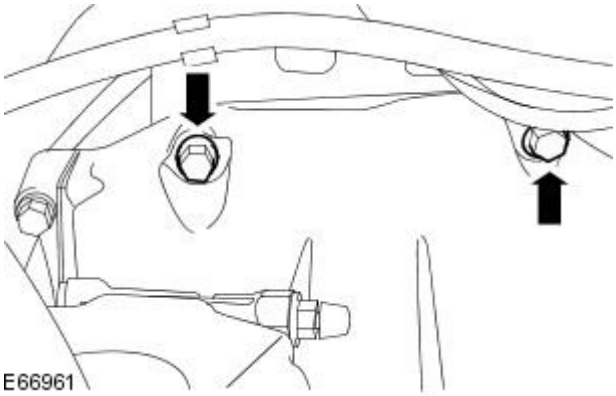

11. Install the transaxle upper retaining bolts.

- Tighten to 48 Nm.

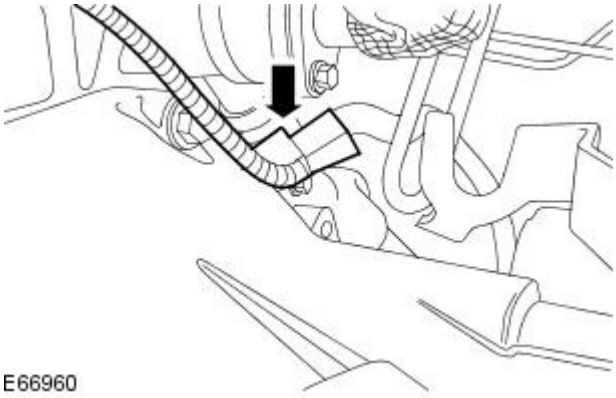

12. Connect the crankshaft position (CKP) sensor electrical connector.

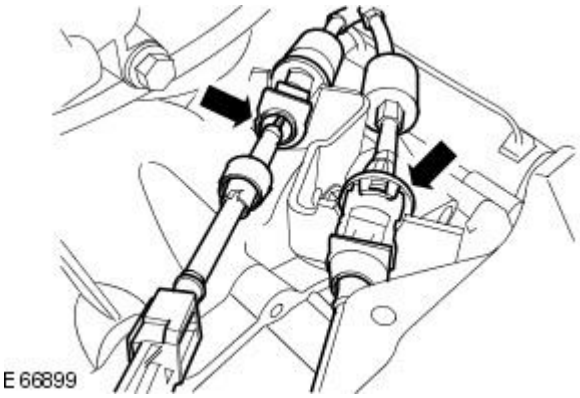

13. NOTE: Remove the selector cable tie straps.

Attach the selector cables.

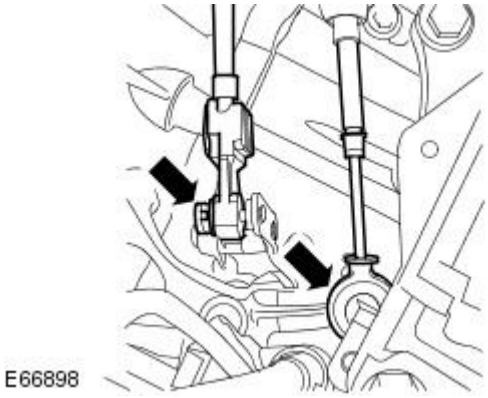

14. Attach the selector cables.

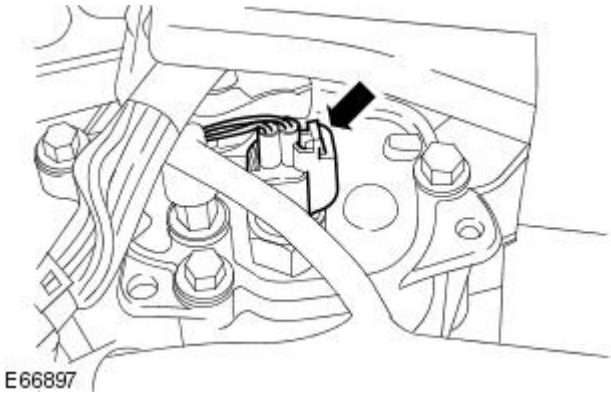

15. Connect the reverse lamp switch electrical connector.

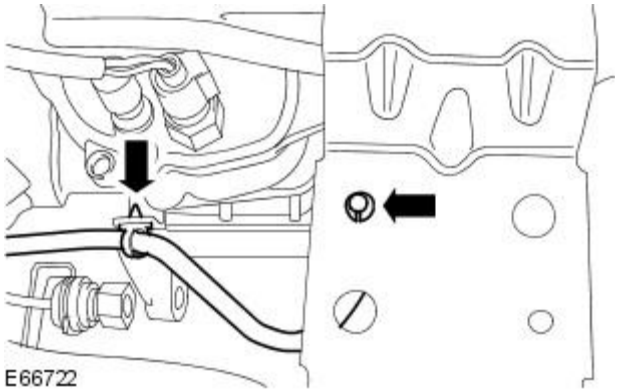

16. Attach the battery ground cable.

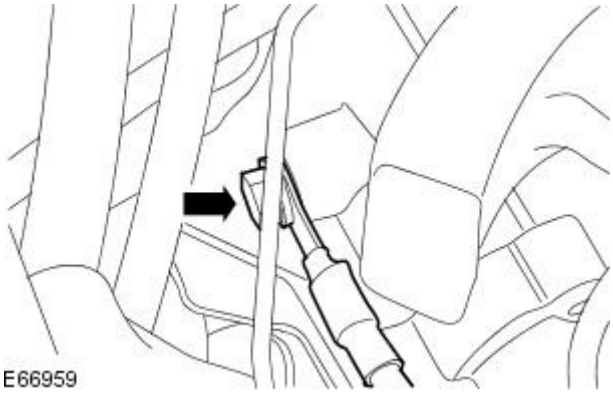

17. Attach the battery ground cable.

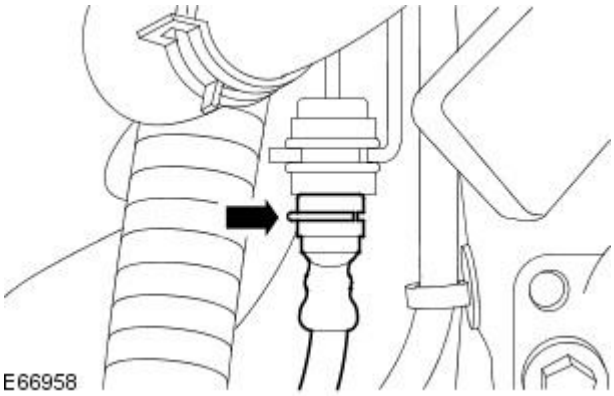

18. CAUTION: If brake fluid is split on the paintwork, the affected area must be washed down immediately with cold water. Failure to follow this instruction may result in damage to the vehicle.

Connect the clutch master cylinder to clutch slave cylinder high pressure hose.

- Remove the pipe clamp from the clutch master cylinder to clutch slave cylinder high pressure hose.

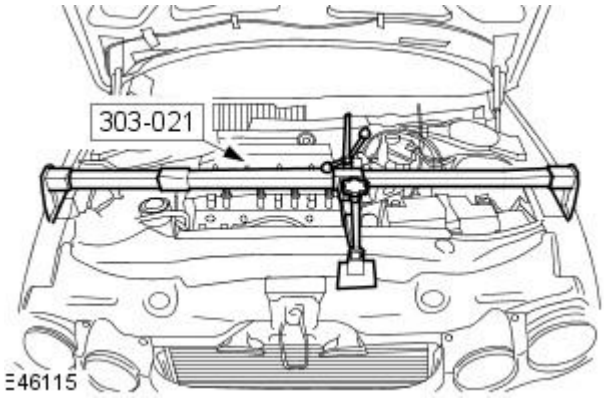

19. Remove the special tool.

20. Raise the vehicle.

21. Attach the vacuum solenoid valve assembly.

- Install the retaining bolts.

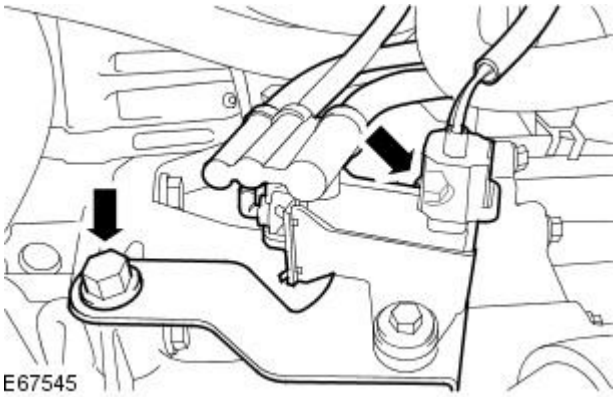

22. Attach the engine wiring harness.

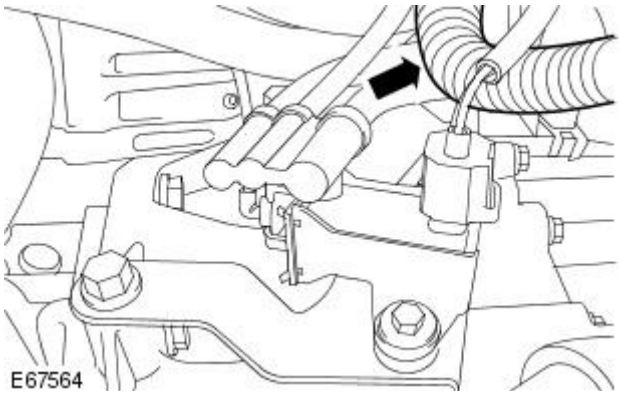

23. NOTE: Remove the power steering fluid pipe tie strap.

Detach the power steering fluid pipe.

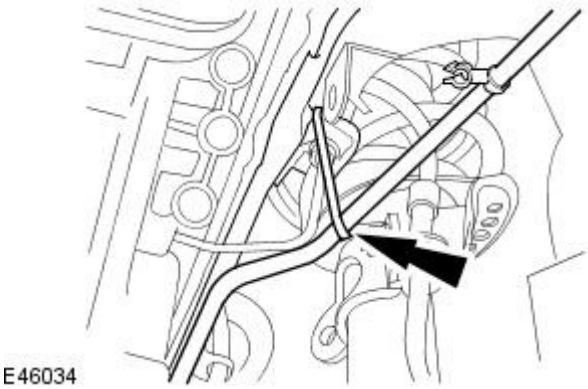

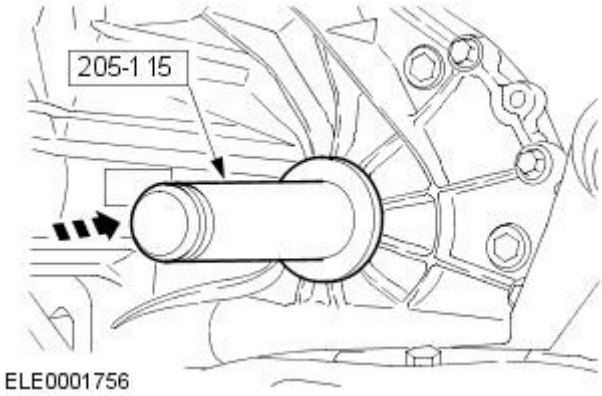

24. NOTE: Remove the transaxle plug.

Using the special tool, install a new right-hand halfshaft seal.

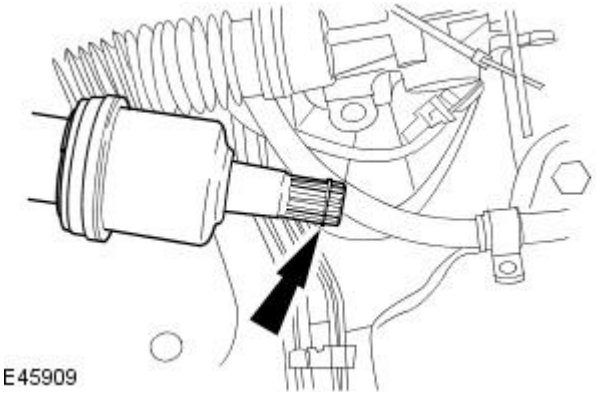

25. Install a new right-hand halfshaft snap ring.

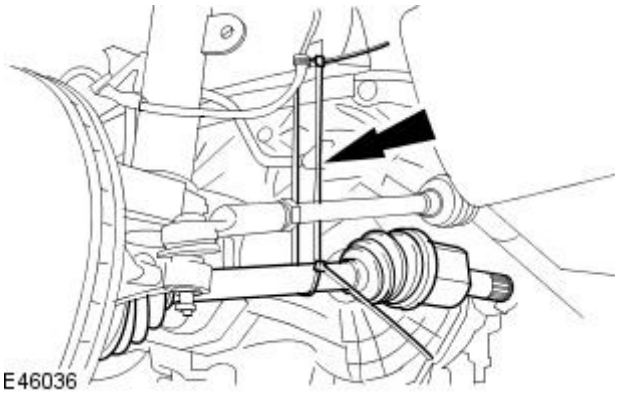

26. CAUTION: Make sure the halfshaft constant velocity (CV) joints do not over articulate. Failure to follow this instruction may result in damage to the CV joints.

• NOTE: Remove the right-hand halfshaft tie strap.

Detach the right-hand halfshaft.

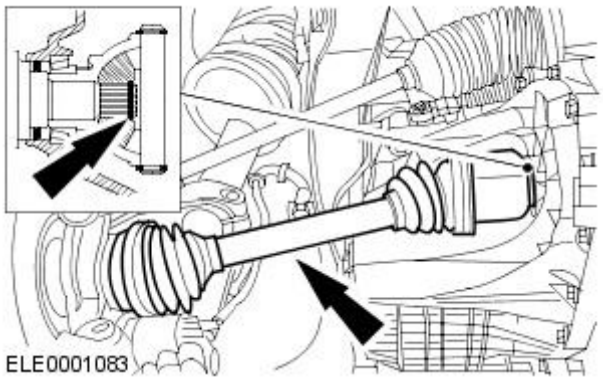

27. CAUTIONS:

Make sure the halfshaft CV joints do not over articulate. Failure to follow this instruction may result in damage to the CV joints.

Make sure the halfshaft seal is not damaged. Failure to follow this instruction may result in an transaxle fluid leak.

Attach the right-hand halfshaft to the transaxle.

- Make sure the halfshaft snap ring is correctly seated.

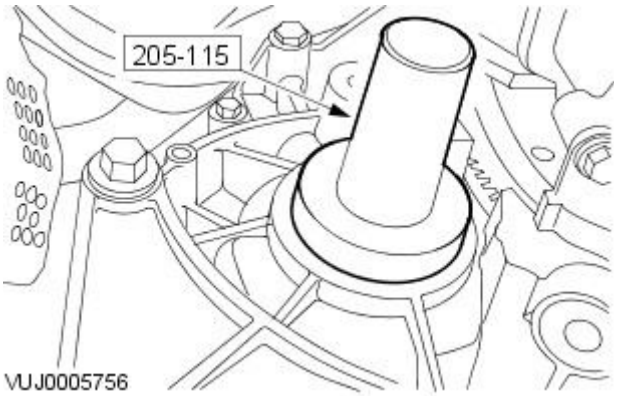

28. NOTE: Remove the transaxle plug.

Using the special tool, install a new left-hand halfshaft seal.

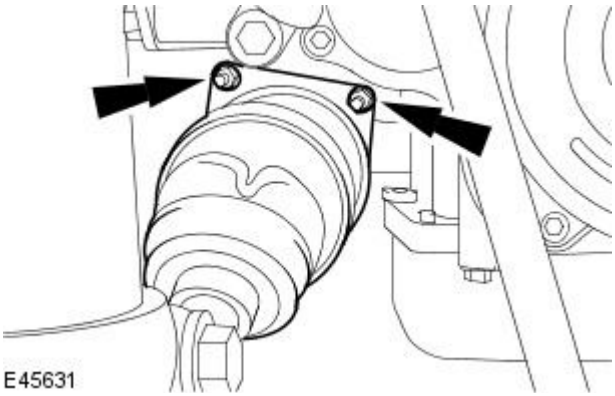

29. CAUTION: Make sure the halfshaft CV joints do not over articulate. Failure to follow this instruction may result in damage to the CV joints.

Attach the left-hand halfshaft.

- Engage the left-hand halfshaft to the transaxle.
- Tighten to 25 Nm.

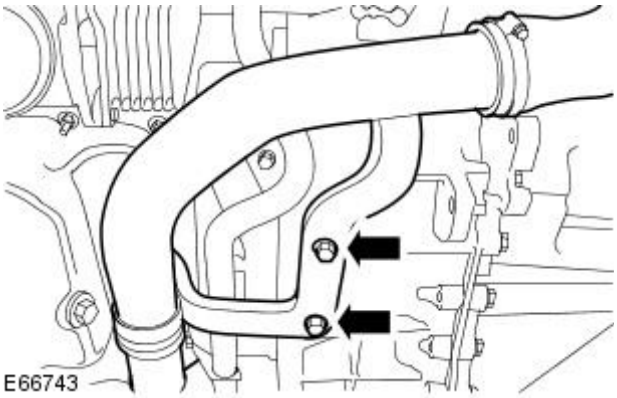

30. Install the charge air cooler intake pipe retaining bolts.

- Tighten to 35 Nm.

31. Install the front subframe.
For additional information, refer to: Front Subframe - 2.0L Duratorq-TDCi/2.2L Duratorq-TDCi (110kW/150PS) - Puma (502-00 Uni-Body, Subframe and Mounting System, Removal and Installation).

32. Install the battery tray.
For additional information, refer to: Battery Tray (414-01 Battery, Mounting and Cables, Removal and Installation).

33. Fill the manual transaxle to the correct oil level.
For additional information, refer to: Transaxle Draining and Filling - Vehicles With: 6-Speed Manual Transaxle - MMT6 (308-03 Manual Transmission/Transaxle, General Procedures).

Manual Transmission / Transaxle - Transaxle2.0L NA V6 - AJV6 / 2.5L NA V6 - AJV6 / 3.0L NA V6 - AJ27

Installation

Special Tool(s)	
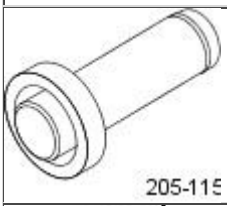 205-115	Halfshaft oil seal installer 205-115
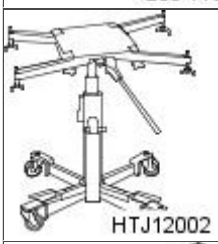 HTJ12002	Powertrain assembly jack HTJ1200-2
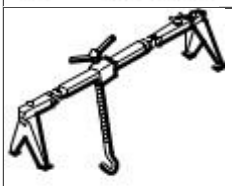 303-021	Engine support bracket 303-021
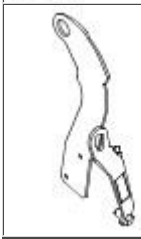 E46047	Engine support brackets 303-1068

Installation

All vehicles

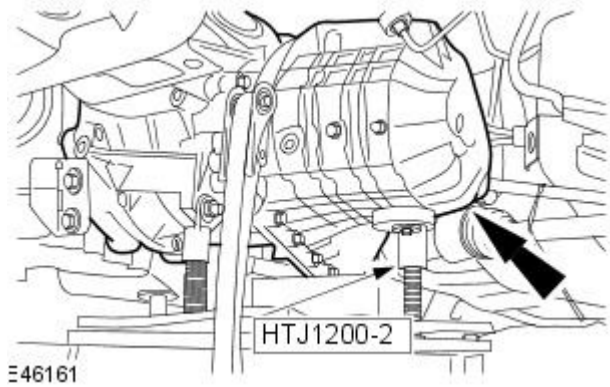

E46161

1. Install the transaxle.

- Raise the powertrain assembly jack and transaxle assembly.
- Align the transaxle to the clutch plate.

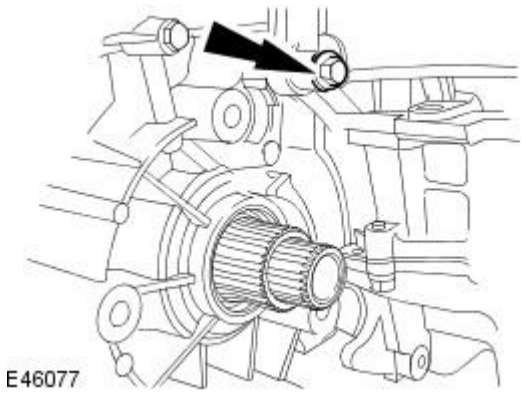
E46077

2. NOTE: Vehicles with 2.5L and 3.0L engines shown, vehicles with 2.0L engine similar.

Install the transaxle retaining bolt.

- Tighten to 48 Nm.

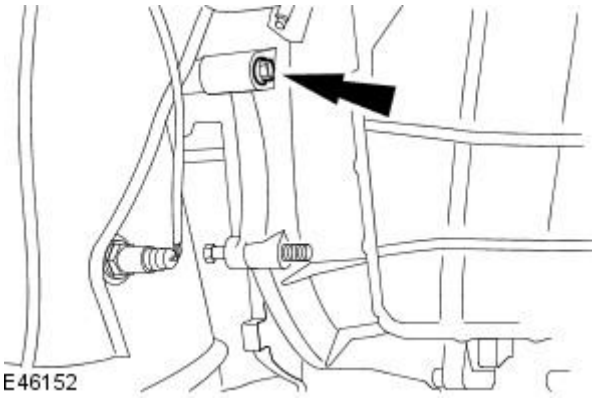

3. Install the transaxle retaining bolt.

- Tighten to 48 Nm.

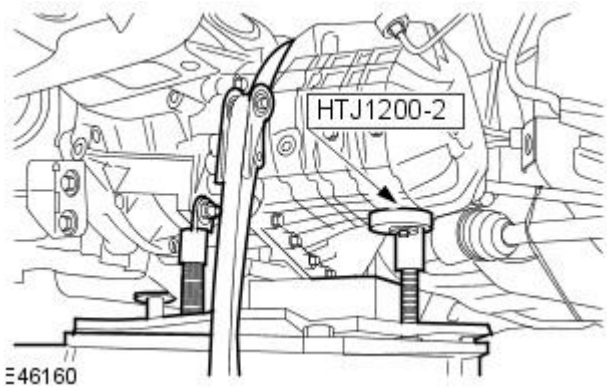

4. Remove the powertrain assembly jack.

- Remove the transaxle to the powertrain assembly jack securing strap.

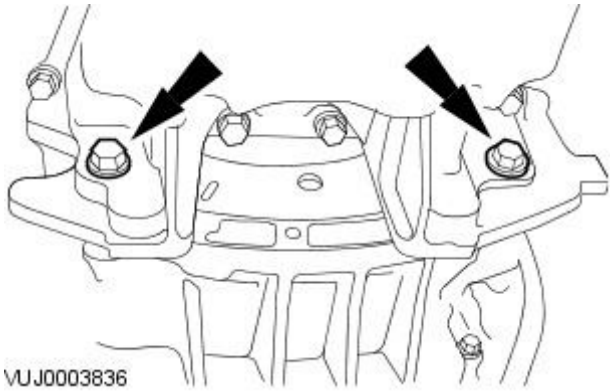

5. Install the transaxle retaining bolts.

- Tighten to 48 Nm.

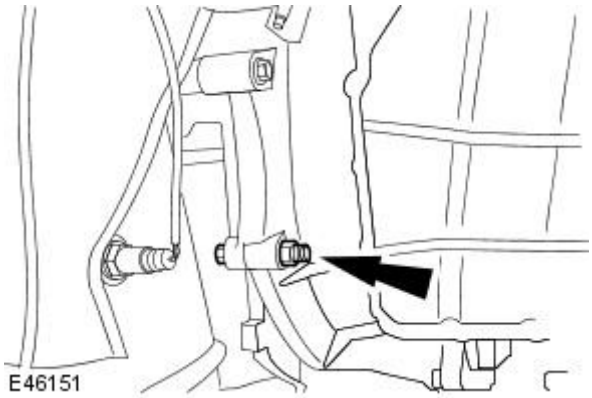

6. Install the transaxle retaining nut.

- Tighten to 48 Nm.

7. Lower the vehicle.
For additional information, refer to: Lifting (100-02 Jacking and Lifting, Description and Operation).

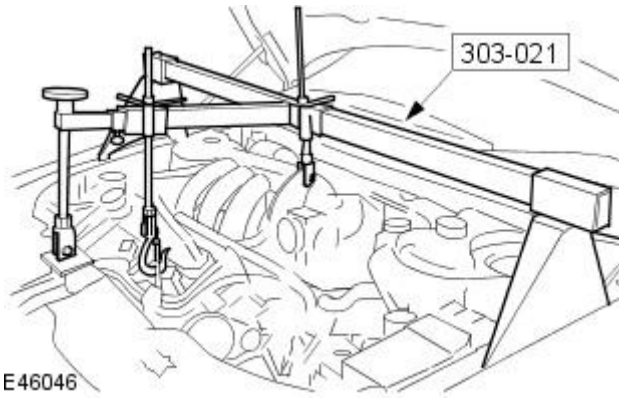

8. Using the engine support bracket raise the powertrain assembly.

- Adjust the engine support bracket to align the transaxle to the transaxle mount bracket.

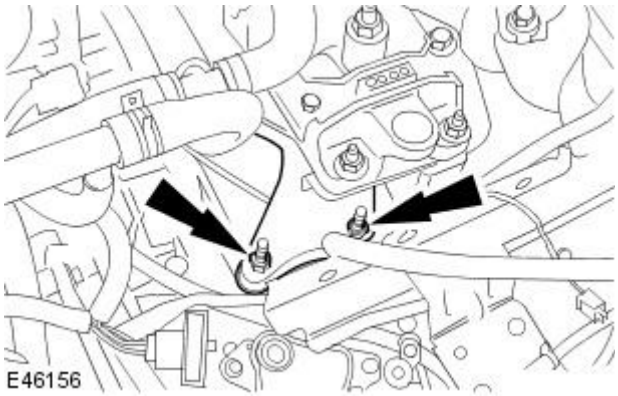

9. Install the transaxle mount bracket securing studs.

- Tighten to 80 Nm.

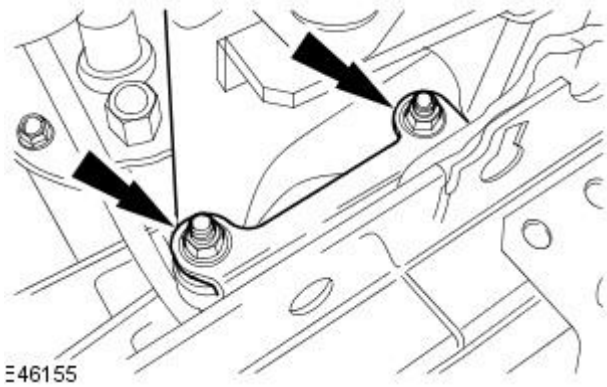

10. Install the clutch master cylinder to clutch slave cylinder high pressure pipe support bracket.

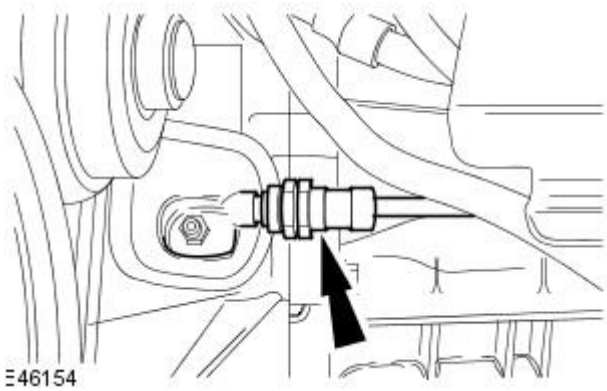

11. CAUTION: If brake fluid is split on the paintwork, the affected area must be washed down immediately with cold water. Failure to follow this instruction may result in damage to the vehicle.

Attach the clutch master cylinder to clutch slave cylinder high pressure pipe to the clutch slave cylinder.

- Install the clutch master cylinder to clutch slave cylinder high pressure pipe retaining clip.

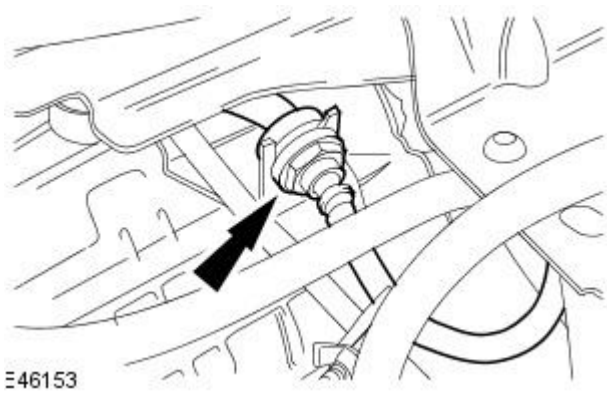

12. Attach the clutch master cylinder to clutch slave cylinder high pressure pipe to the support bracket.

- Remove the pipe clamp from the clutch master cylinder to clutch slave cylinder high pressure pipe.

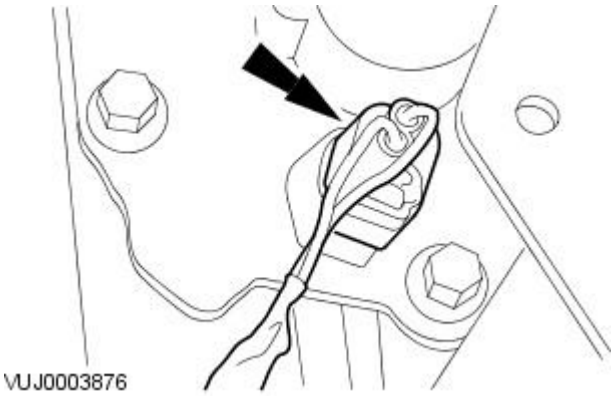

13. Connect the reverse lamp switch electrical connector.

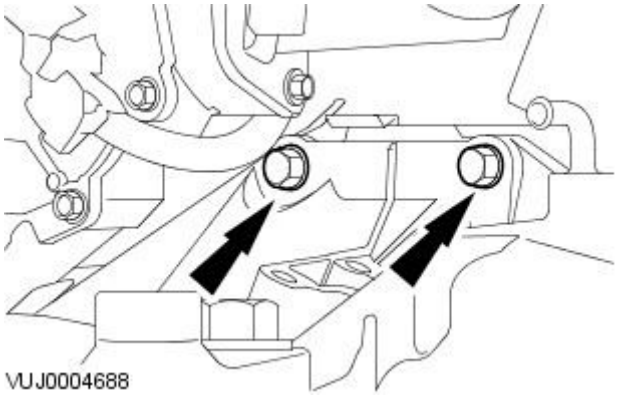

14. Install the transaxle retaining bolts.

- Tighten to 48 Nm.

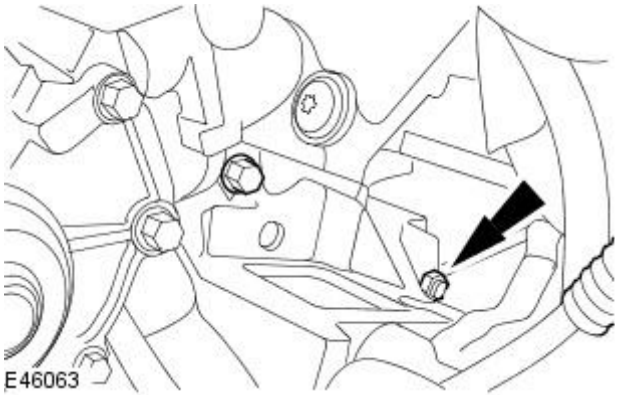

15. Install the transaxle retaining bolt.

- Tighten to 48 Nm.

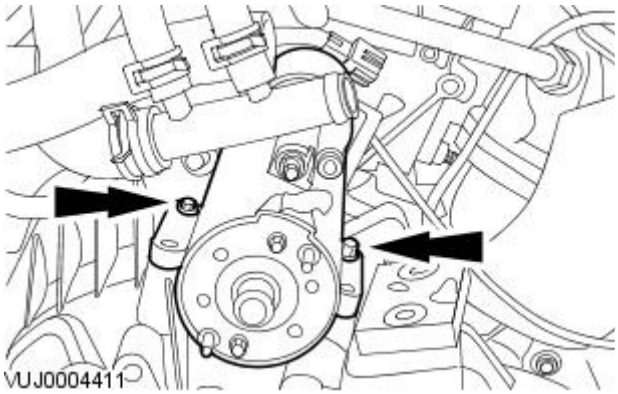

16. Install the starter motor.

- Tighten to 35 Nm.

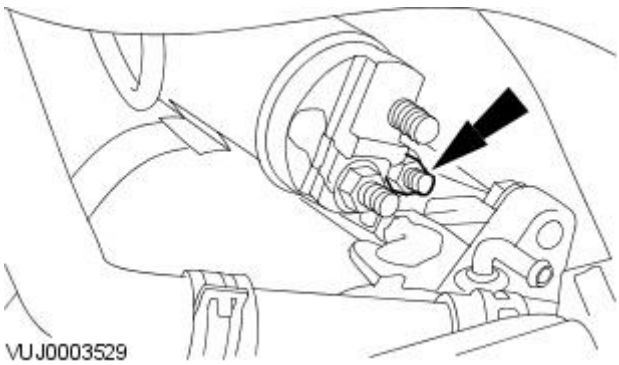

17. Attach the starter motor solenoid electrical connector.

- Tighten to 6 Nm.

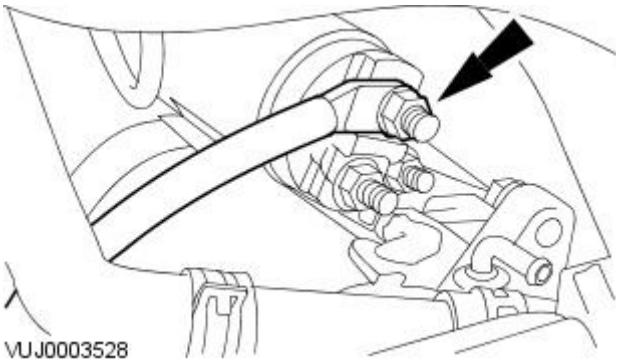

18. Attach the starter motor electrical connector.

- Tighten to 12 Nm.

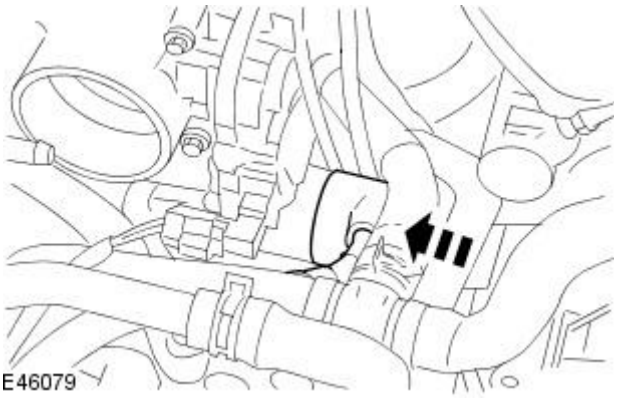

19. Attach the starter motor solenoid cover.

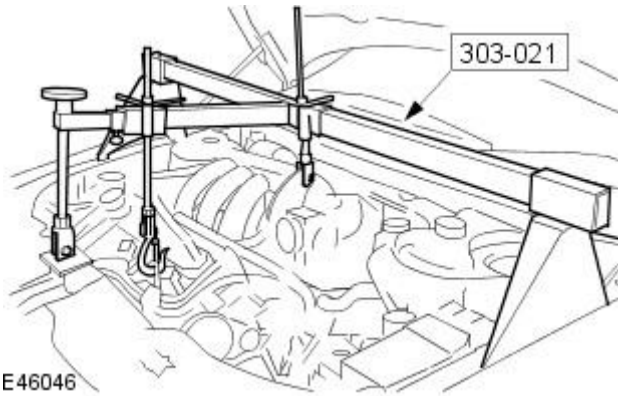

20. Remove the engine support bracket.

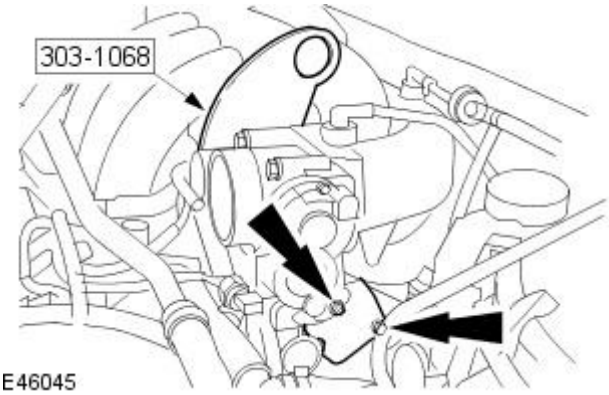

21. Remove the engine support bracket.

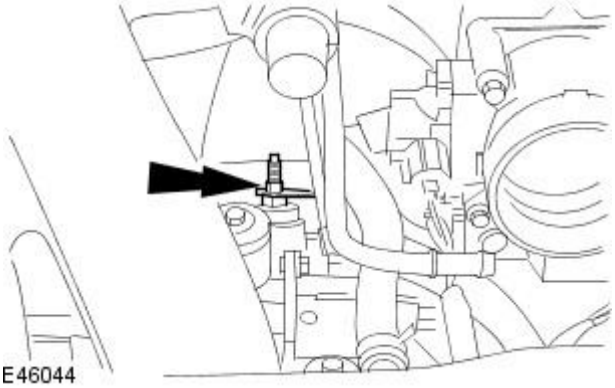

22. Attach the wiring harness to the camshaft cover retaining stud.

- Tighten to 6 Nm.

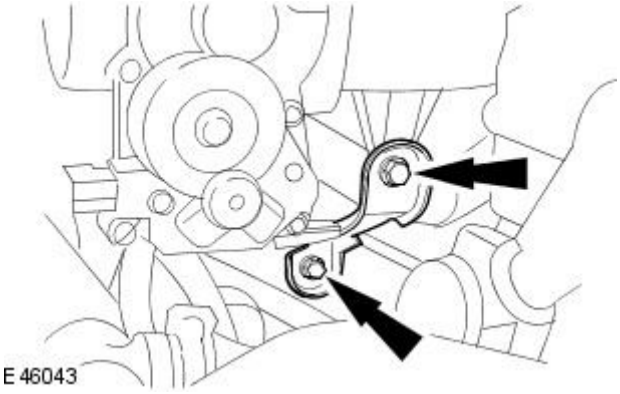

23. Install the intake manifold support bracket.

- Tighten to 10 Nm.

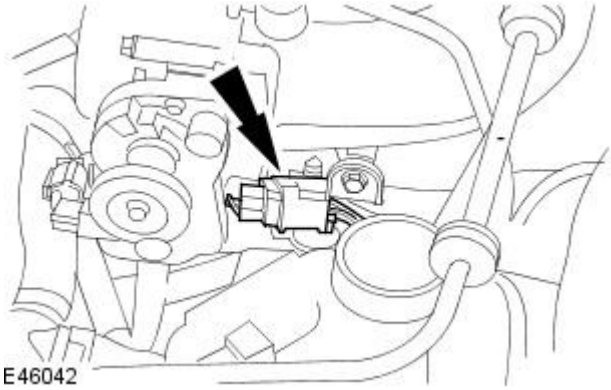

24. Attach the electrical connector to the intake manifold support bracket.

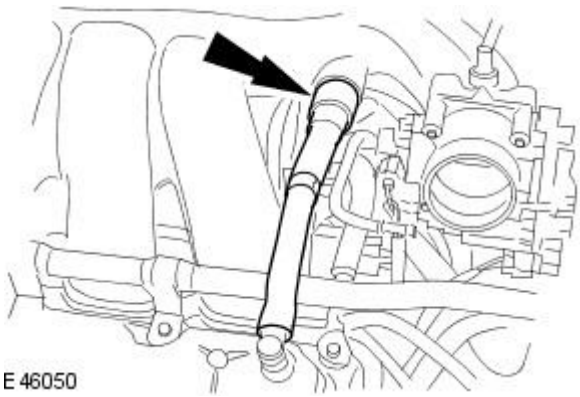

25. Attach the positive crankcase ventilation (PCV) hose to the intake manifold.

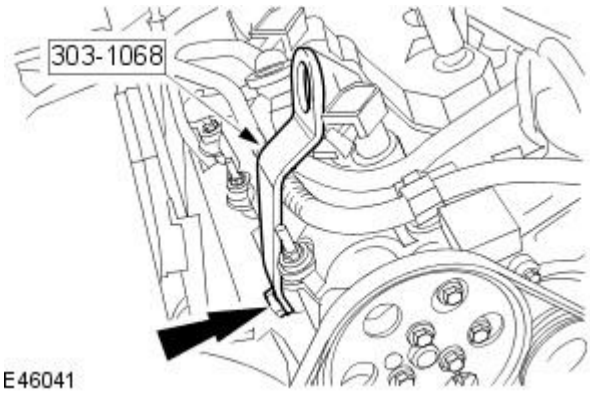

26. Remove the engine support bracket.

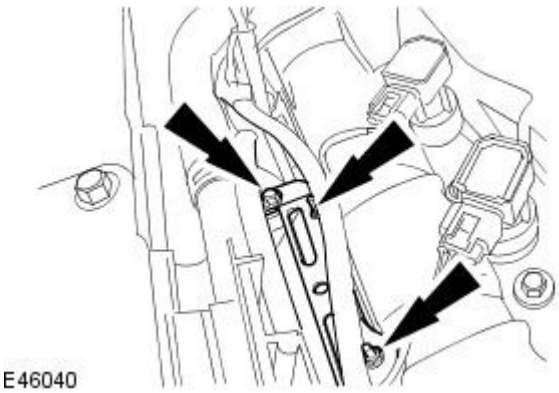

27. Install the air cleaner mount bracket.

- Tighten to 6 Nm.

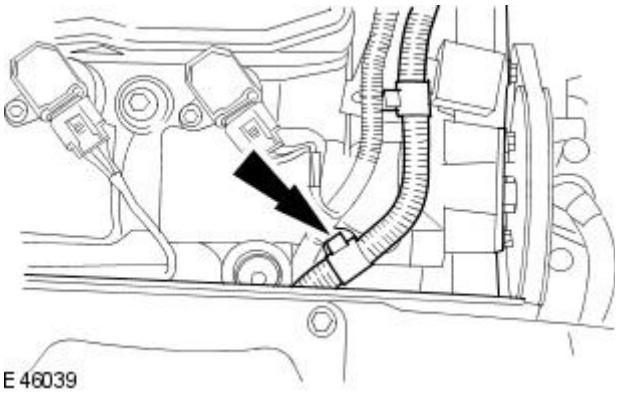

28. Attach the generator wiring harness retaining clip to the camshaft cover retaining clip.

29. Raise the vehicle.
For additional information, refer to: Lifting (100-02 Jacking and Lifting, Description and Operation).

30. Install the transaxle mount bracket retaining bolt.

- Tighten to 80 Nm.

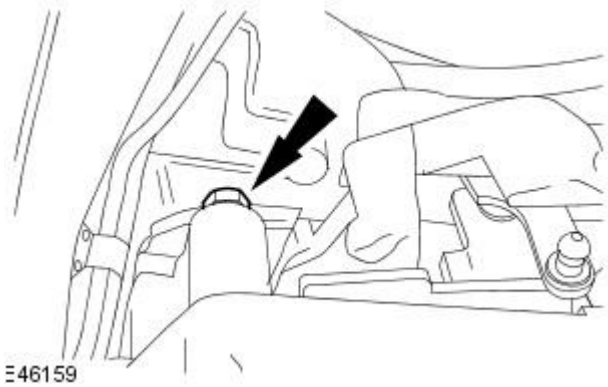

31. Attach the gearshift cable support bracket to the transaxle.

- Tighten to 25 Nm.

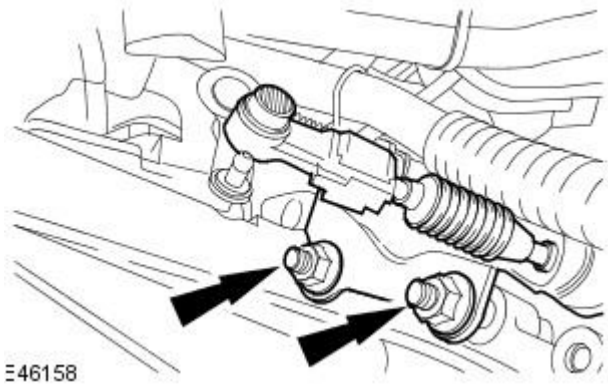

32. Attach the gearshift cables to the transaxle.

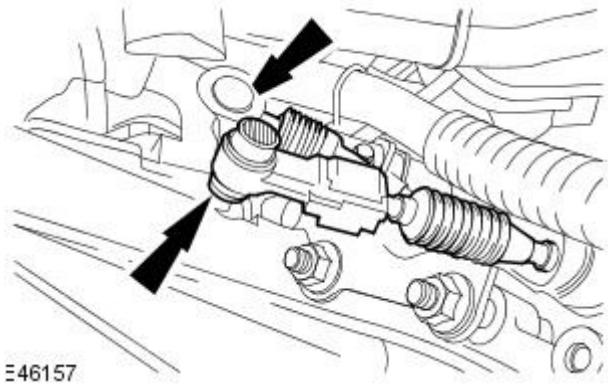

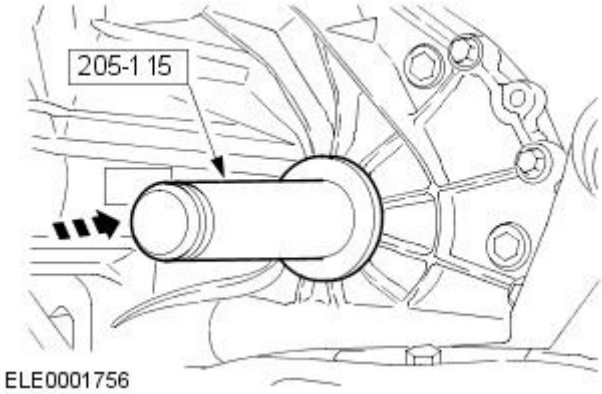

33. NOTE: Remove the transaxle plug.

Using the special tool, install a new halfshaft seal.

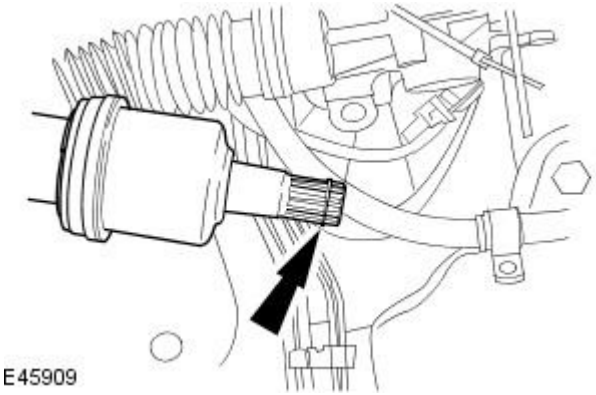

34. Install a new halfshaft snap ring.

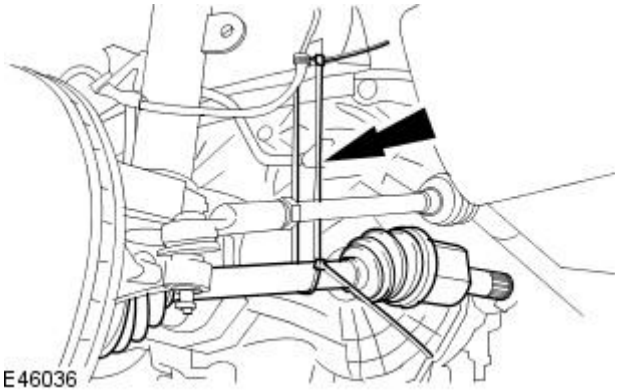

35. CAUTION: Make sure the halfshaft constant velocity (CV) joints do not over articulate. Failure to follow this instruction may result in damage to the CV joints.

Detach the left-hand halfshaft.

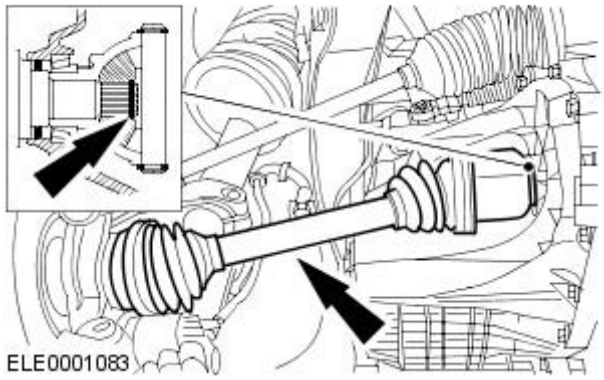

36. CAUTIONS:

Make sure the halfshaft constant velocity (CV) joints do not over articulate. Failure to follow this instruction may result in damage to the CV joints.

Make sure the halfshaft seal is not damaged. Failure to follow this instruction may result in an transaxle fluid leak.

Attach the left-hand halfshaft to the transaxle.

- Make sure the halfshaft snap ring is correctly seated.

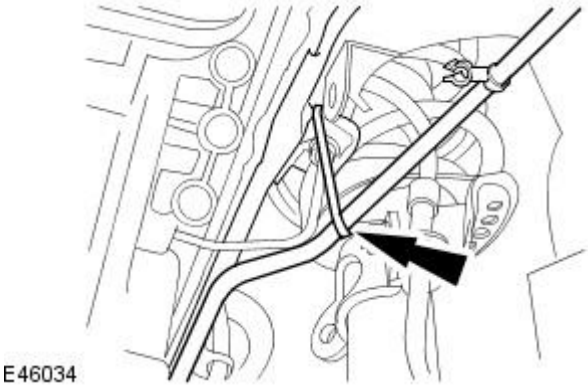

37. Detach the power steering fluid pipe.

Vehicles with 2.0L engine

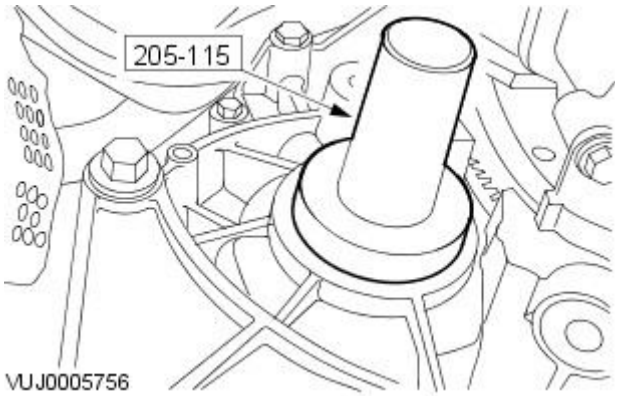

38. NOTE: Remove the transaxle plug.

Using the special tool, install a new halfshaft seal.

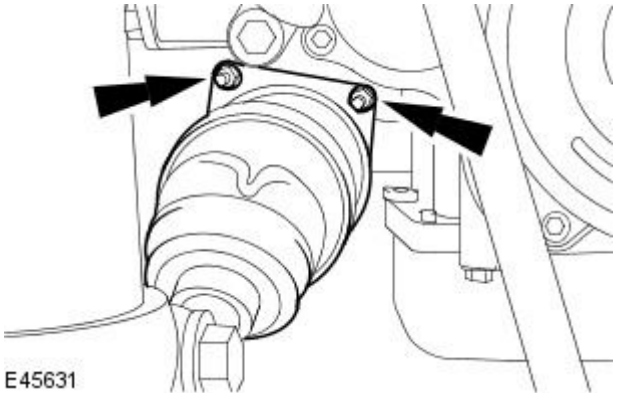

39. CAUTION: Make sure the halfshaft constant velocity (CV) joints do not over articulate. Failure to follow this instruction may result in damage to the CV joints.

Attach the right hand halfshaft.

- Engage the right-hand halfshaft from the transaxle.
- Tighten to 25 Nm.

Vehicles with 2.5L or 3.0L engine

40. Install the transfer case.
For additional information, refer to: Transfer Case (308-07 Transfer Case, Installation).

41. Install the steering gear heat shield.

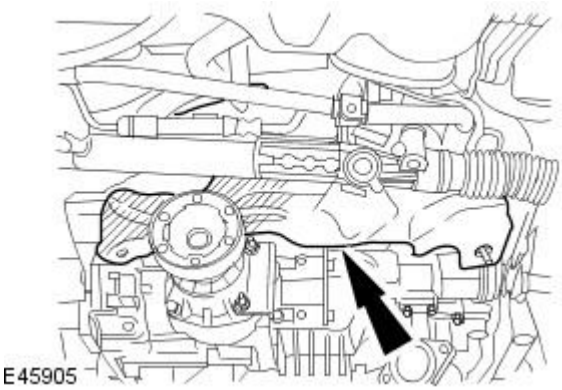

42. Install the steering gear heat shield bracket.

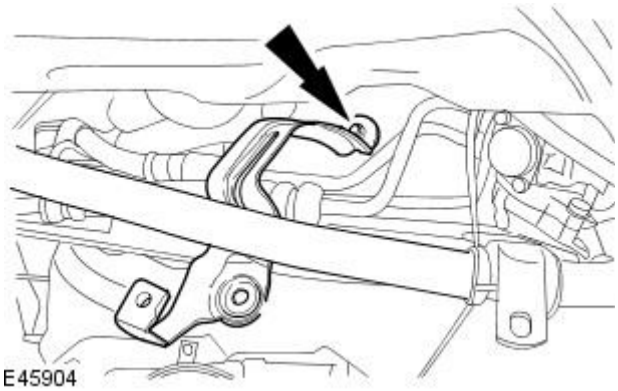

All vehicles

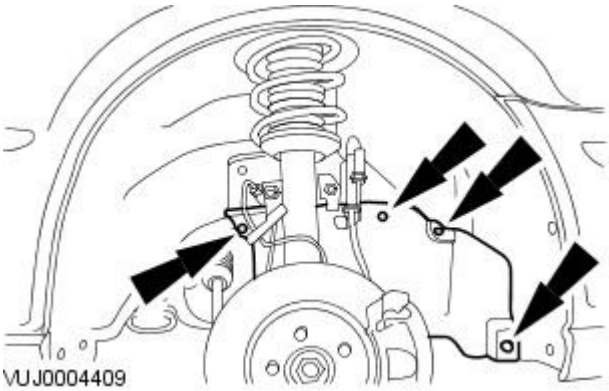

43. Install the fender splash shield access panel.

44. Install the front subframe.
For additional information, refer to: Front Subframe - 2.0L NA V6 - AJV6/2.5L NA V6 - AJV6/3.0L NA V6 - AJ27 (502-00 Uni-Body, Subframe and Mounting System, Removal and Installation).

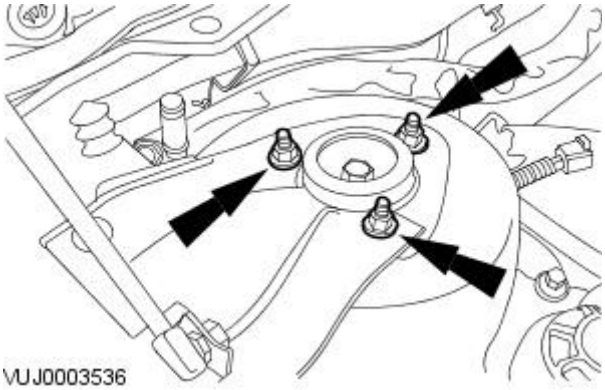

45. Tighten the right-hand shock absorber and spring assembly securing nuts.

- Tighten to 25 Nm.

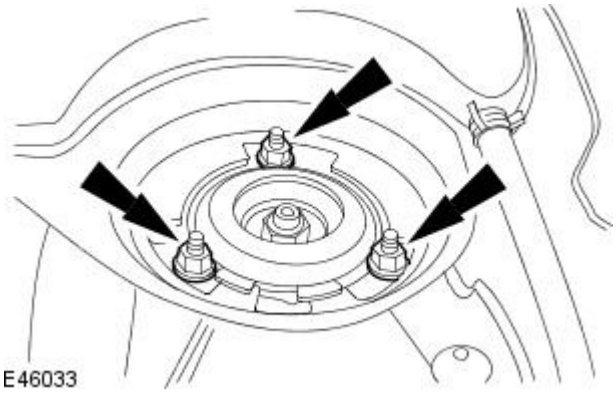

46. Tighten the left-hand shock absorber and spring assembly securing nuts.

- Tighten to 25 Nm.

47. Install the air cleaner.
For additional information, refer to: Air Cleaner (303-12A Intake Air Distribution and Filtering - 2.0L NA V6 - AJV6/2.5L NA V6 - AJV6/3.0L NA V6 - AJ27, Removal and Installation).

48. Install the battery tray.
For additional information, refer to: Battery (414-01 Battery, Mounting and Cables, Removal and Installation).

49. Fill the manual transaxle to the correct oil level.
For additional information, refer to: Transaxle Draining and Filling - Vehicles With: 5-Speed Manual Transmission - MT75 (308-03 Manual Transmission/Transaxle, General Procedures).

Published: 11-May-2011

Manual Transmission / Transaxle External Controls -

Torque Specifications

Description	Nm	lb-ft	lb-in
Selector cable grommet	-	-	60 lb-in
Gearshift lever mount retaining nuts	-	-	80 lb-in

Manual Transmission / Transaxle External Controls - External Controls

Description and Operation

Vehicles with 5-speed manual transmission

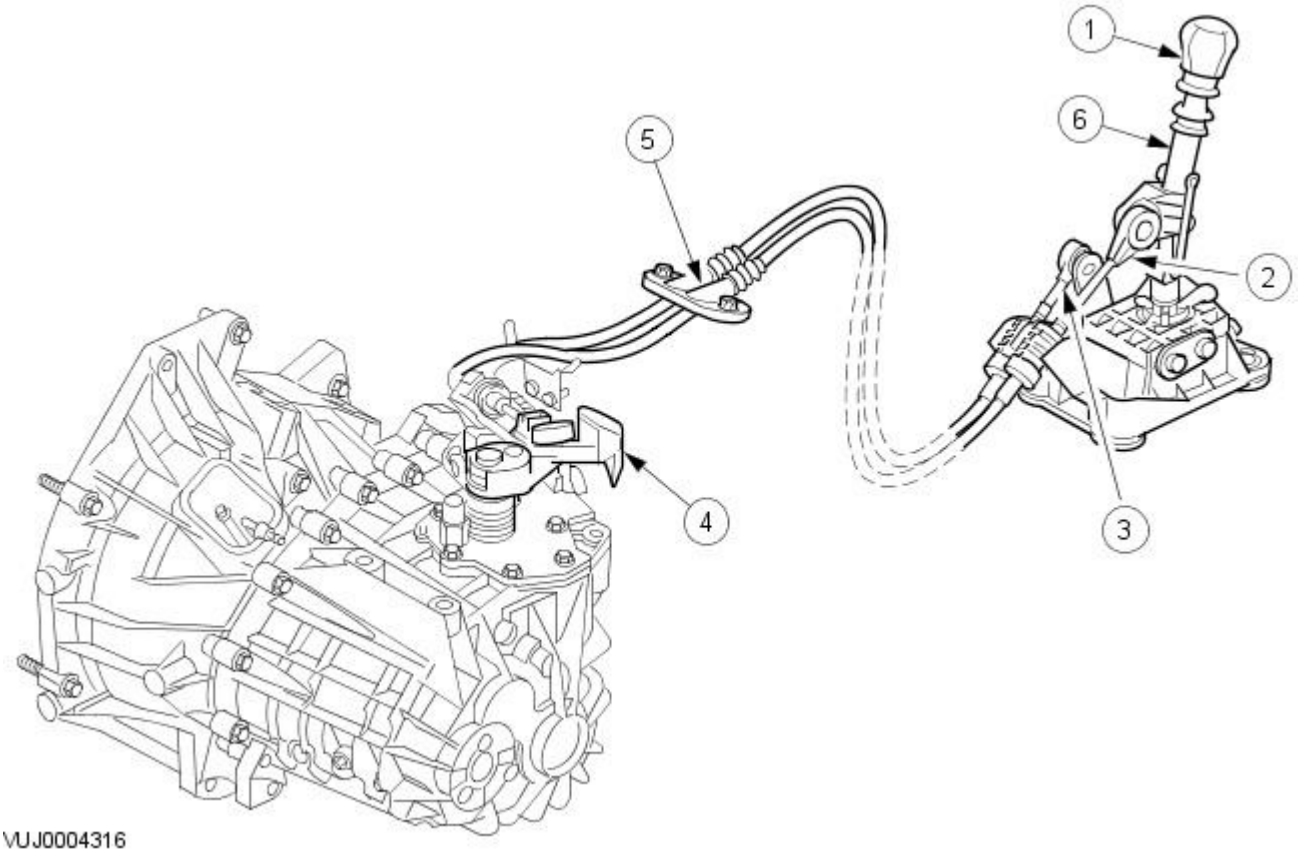

Item	Part Number	Description
1	—	Gearshift lever knob
2	—	Shift cable
3	—	Selector cable
4	—	Selector lever on the transmission
5	—	Shift and selector cable grommet
6	—	Gearshift lever

The shift is white and the selector cable is black. In order to detach the cables from there abutment brackets on the transmission and at the gear lever, twist the locking tab of each abutment clockwise. As the shift and selector cable have a common grommet where they pass through the floor, they can only be changed as a pair.

Vehicles with 6-speed manual transmission

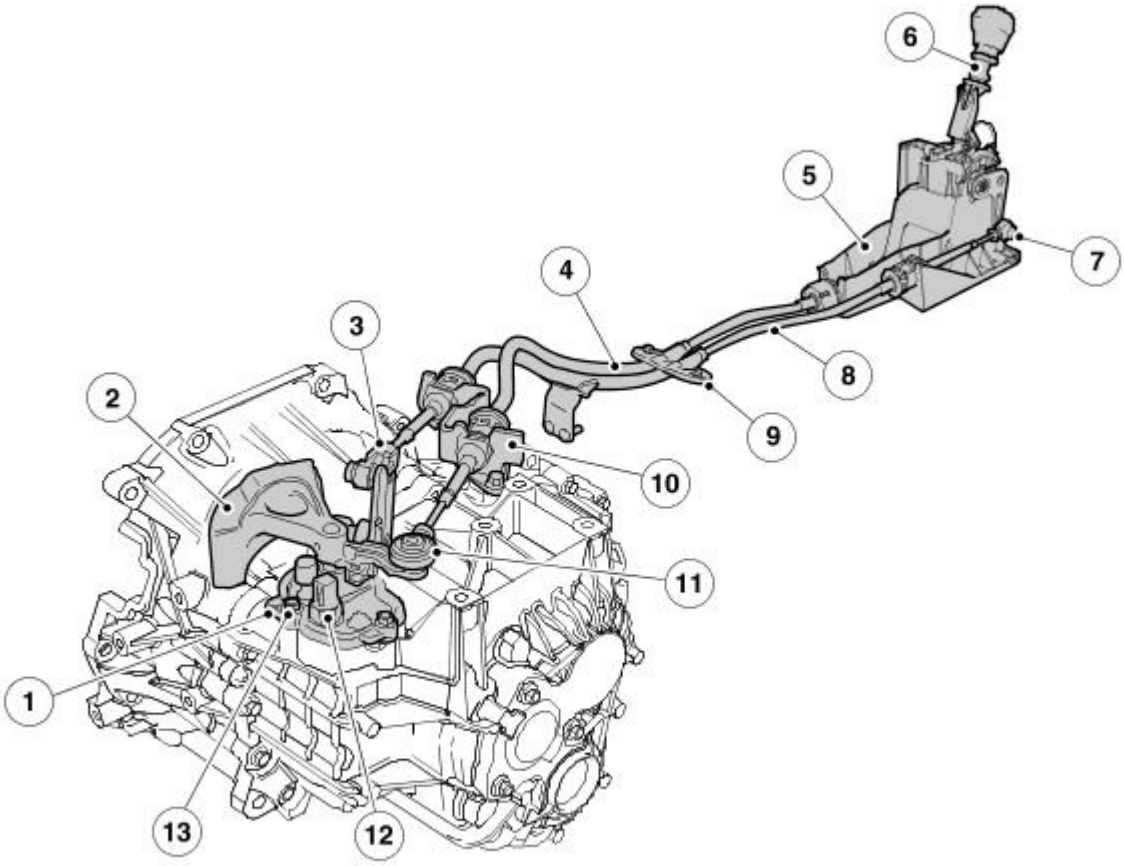

Item	Description	Item	Description
1	Internal shift mechanism	8	Selector cable
2	Counterbalance	9	Body seal
3	Selector cable adjustment mechanism	10	Shift cable mounting
4	Shift cable	11	Shift cable mounting point on the gearshift lever
5	Gear lever housing	12	Reverse gear switch
6	Shift lever	13	Transmission vent
7	Selector cable mounting point on the gearshift lever		

The transaxle uses a cable-shift mechanism designed to provide a smooth and positive gearshift action, while also isolating the lever from any powertrain vibration. Cable adjustment is provided at the transaxle end of the cables at the abutment brackets. Damper weights incorporated behind the cable adjusters suppress cable vibration.

There are no adjustment capabilities within the gear selector mechanism.

The cables are color coded and attached at both ends with ball connections incorporating a button release.

Reverse gear is selected by pulling-up the ring below the gear knob and then moving the lever to the reverse position.

Published: 11-May-2011

Manual Transmission / Transaxle External Controls - External Controls

Diagnosis and Testing

1. **1.** Verify the customer concern by operating the system.
2. **2.** Visually inspect for obvious signs of mechanical damage.

Mechanical
• Visibly damaged or worn • Loose or missing screws or nuts

3. **3.** If an obvious cause for an observed or reported concern is found, correct the cause (if possible) before proceeding to the next step.
4. **4.** If the concern is not visually evident, verify the symptom and refer to the
   REFER to: Manual Transmission and Clutch (308-00 Manual Transmission/Transaxle and Clutch - General Information, Diagnosis and Testing).

Manual Transmission / Transaxle External Controls - Gearshift CablesVehicles With: 5-Speed Manual Transmission - MT75

Removal and Installation

Special Tool(s)	
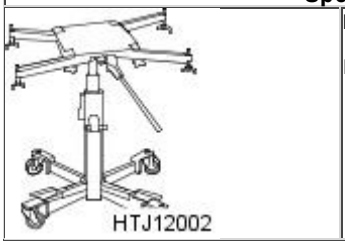 HTJ12002	Powertrain assembly jack HTJ1200-2

Removal

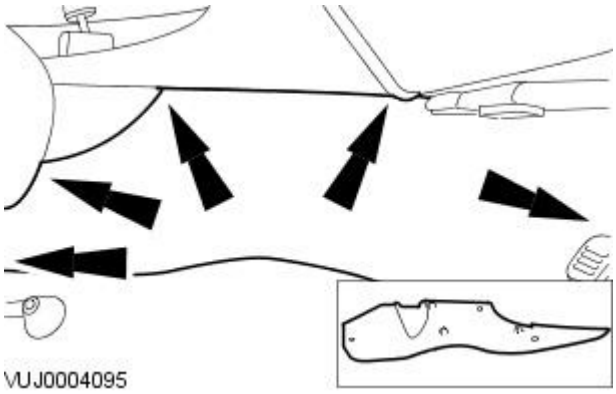

1. Remove the center console right-hand side panel.

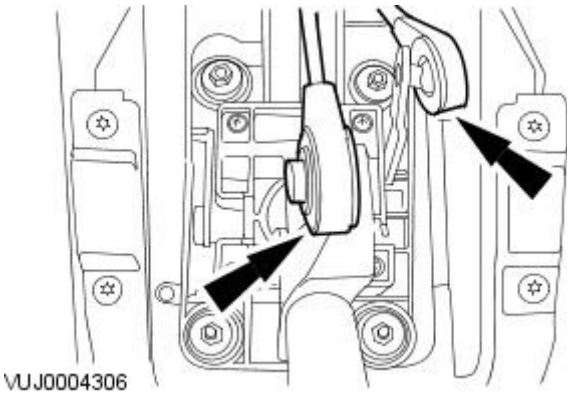

2. NOTE: Press the button to release the cable fitting before disconnecting the cable.

Disconnect the gearshift selector cables.

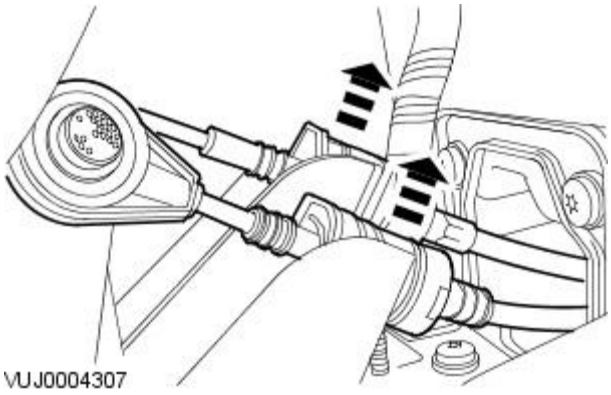

3. Disconnect the gearshift selector cables.

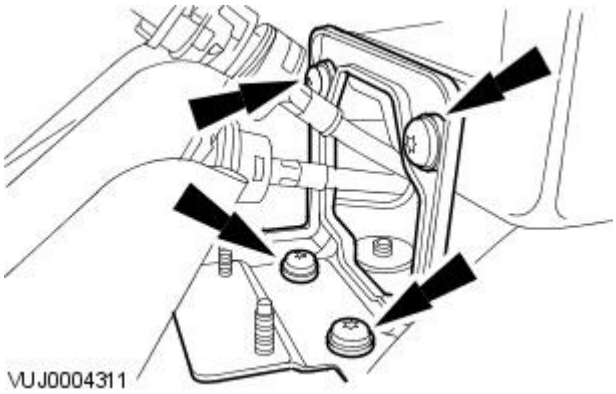

4. Remove the instrument panel center mount bracket.

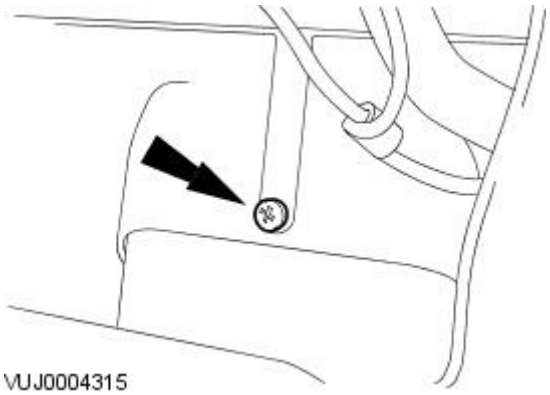

5. Remove the center air duct retaining screw.

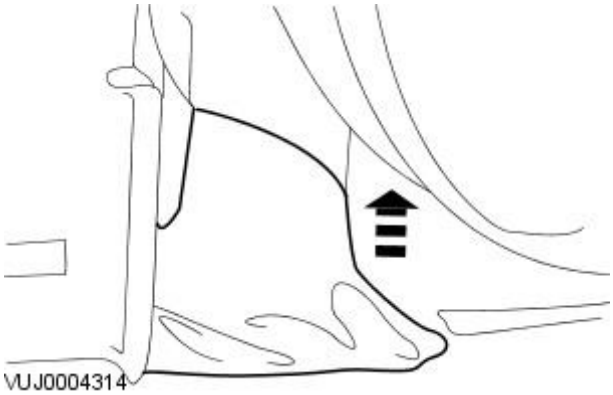

6. Reposition the center air duct upwards.

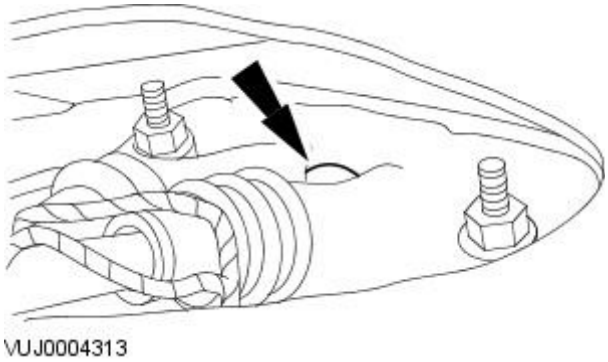

7. Detach the gearshift selector cable grommet.

8. Raise and support the vehicle. For additional information, refer toSection 100-02 Jacking and Lifting.

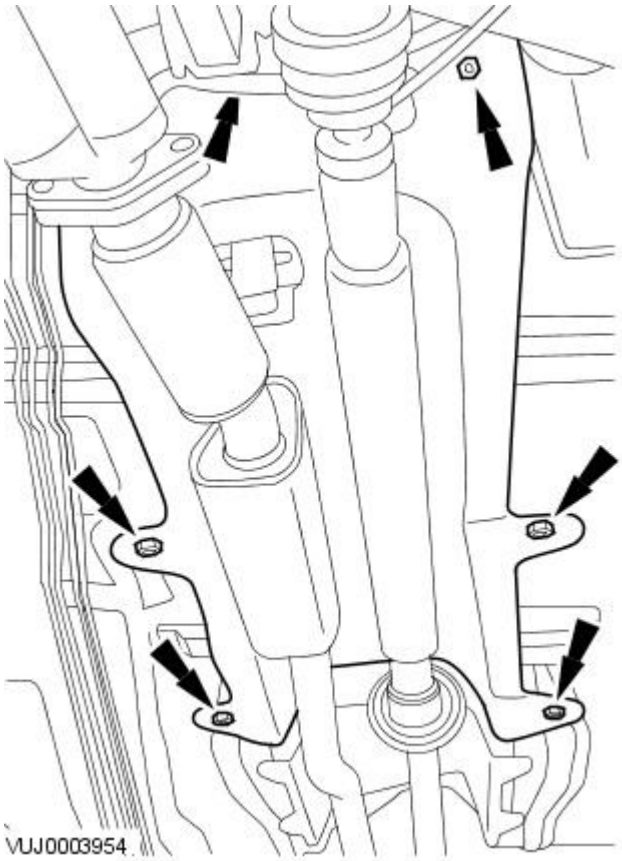

9. Detach the exhaust heat shield.

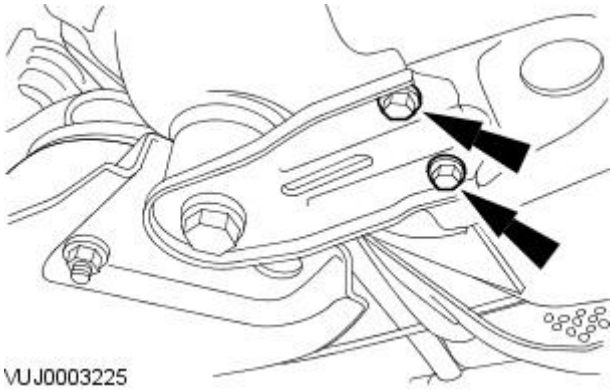

10. CAUTION: Using the powertrain assembly jack, support the rear of the subframe.

- NOTE: Left-hand shown, right-hand similar.

Remove the subframe reinforcement plate retaining bolts.

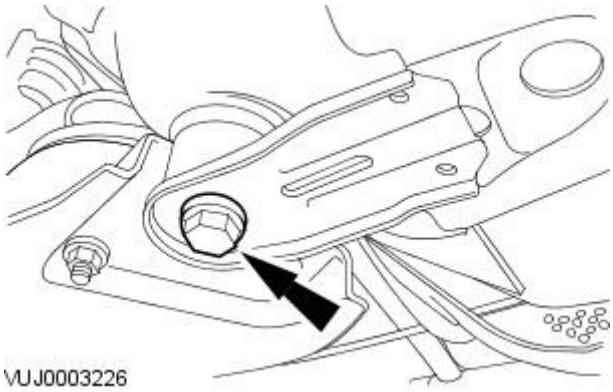

11. NOTE: Left-hand shown, right-hand similar.

Loosen the subframe rear mount retaining bolt.

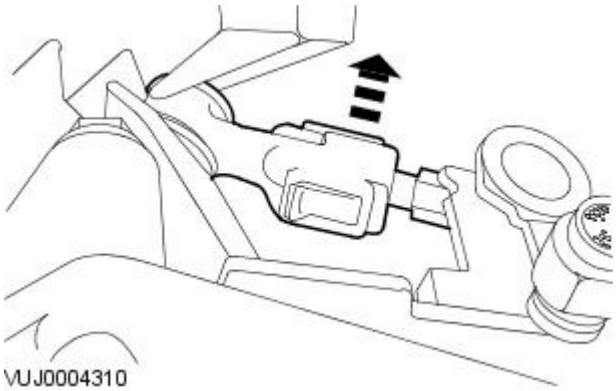

12. NOTE: Press the button to release the cable fitting before disconnecting the cable.

Detach the gearshift selector cables.

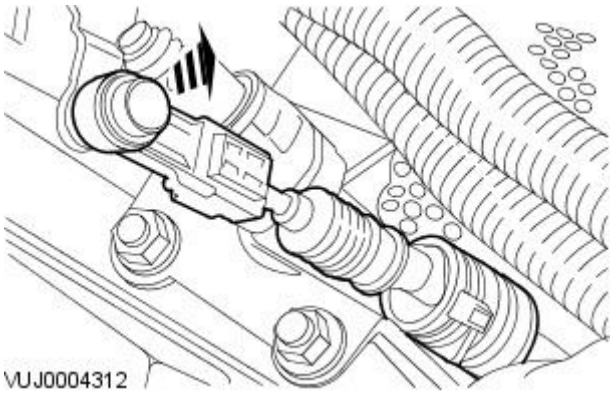

13. NOTE: Press the button to release the cable fitting before disconnecting the cable.

Remove the gearshift selector cable.

Installation

1. To install, reverse the removal procedure.

2. Tighten to 60 lb/in.

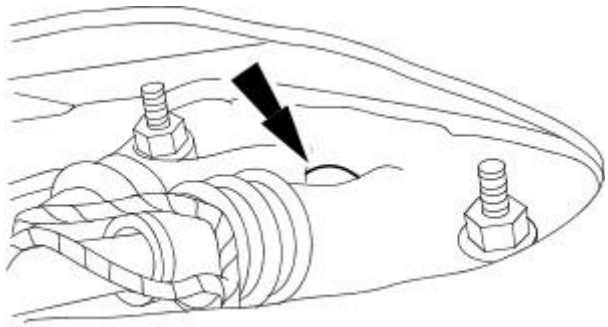

3. Check and adjust the gearshift cables. For additional information, refer toSection 308-00 Manual Transmission/Transaxle and Clutch - General Information.

4. Tighten the subframe rear mount retaining bolt.

- Tighten to 142 Nm.

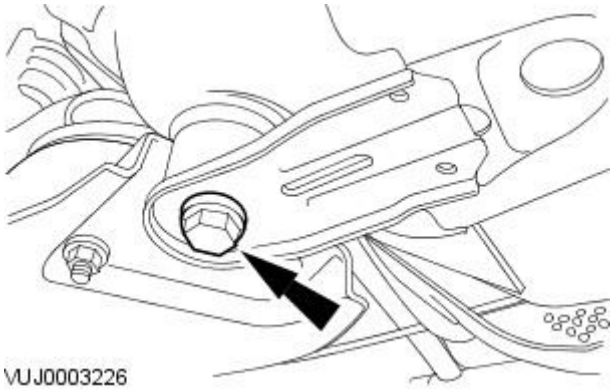

5. Tighten the front subframe reinforcement plate retaining bolts.

- Tighten to 35 Nm.

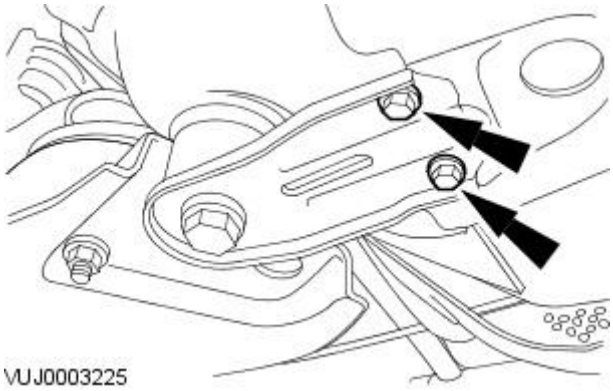

6. Carry out front subframe alignment procedure. For additional information, refer toSection 502-00 Uni-Body, Subframe and Mounting System.

Manual Transmission / Transaxle External Controls - Gearshift CablesVehicles With: 6-Speed Manual Transaxle - MMT6

Removal and Installation

Removal

1. Remove the gearshift lever.
   For additional information, refer to: Gearshift Lever - Vehicles With: 6-Speed Manual Transaxle - MMT6 (308-06 Manual Transmission/Transaxle External Controls, Removal and Installation).
2. Remove the center air duct retaining screw.

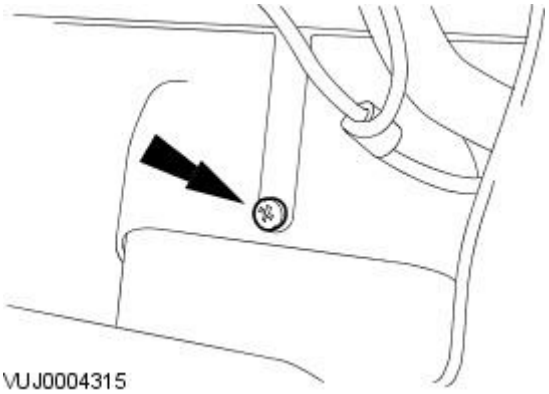

3. Reposition the center air duct upwards.

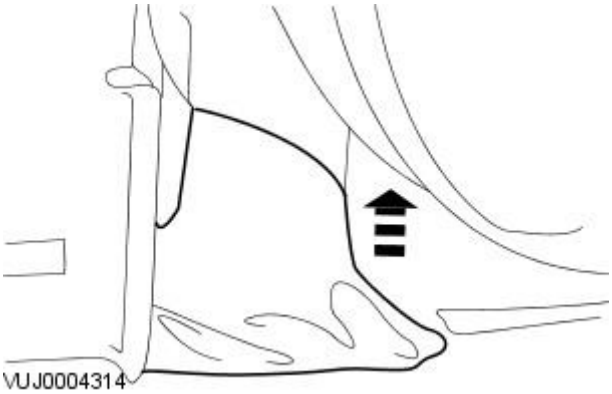

4. Detach the gearshift cable grommet.

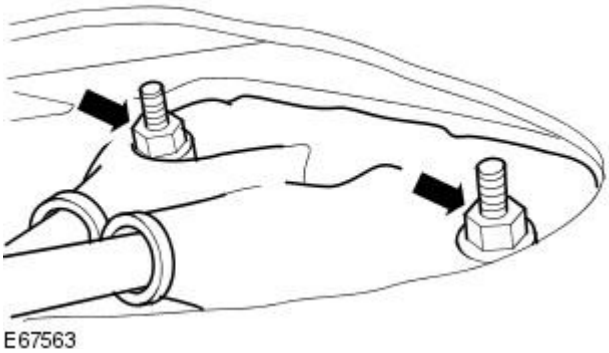

5. Detach the gearshift cables from the transmission selector mechanism.

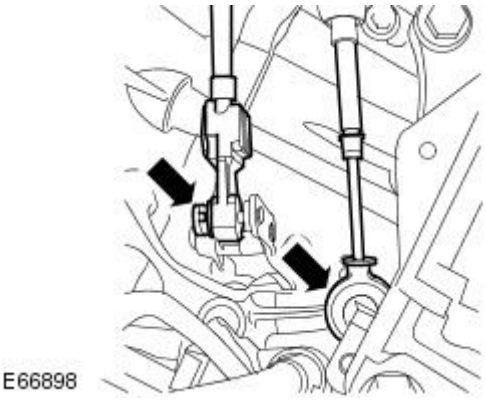

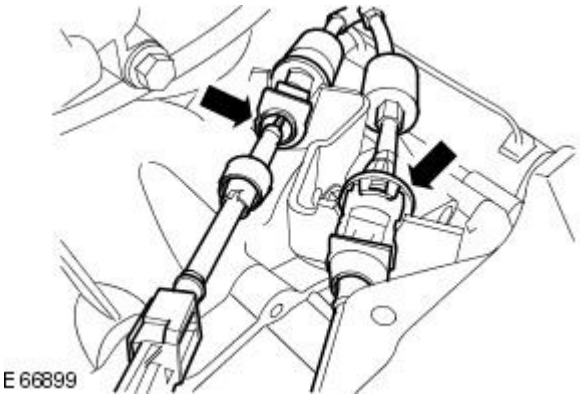

6. Detach the gearshift cables from the transmission retaining bracket.

7. Raise and support the vehicle.
For additional information, refer to: Lifting (100-02 Jacking and Lifting, Description and Operation).

8. Reposition the exhaust mounting for access to the exhaust heat shield.

- Remove the retaining bolts.

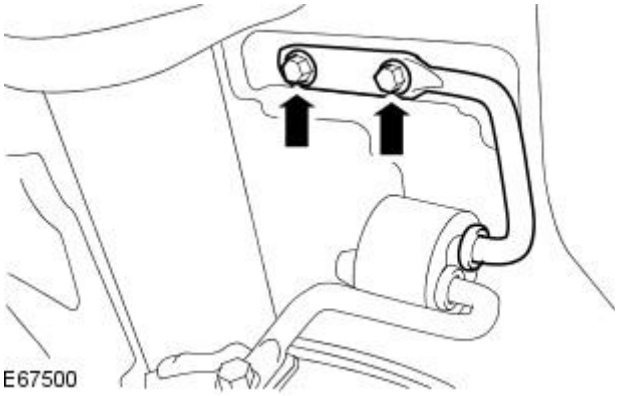

9. Reposition the exhaust heat shield for access to the gearshift cables.

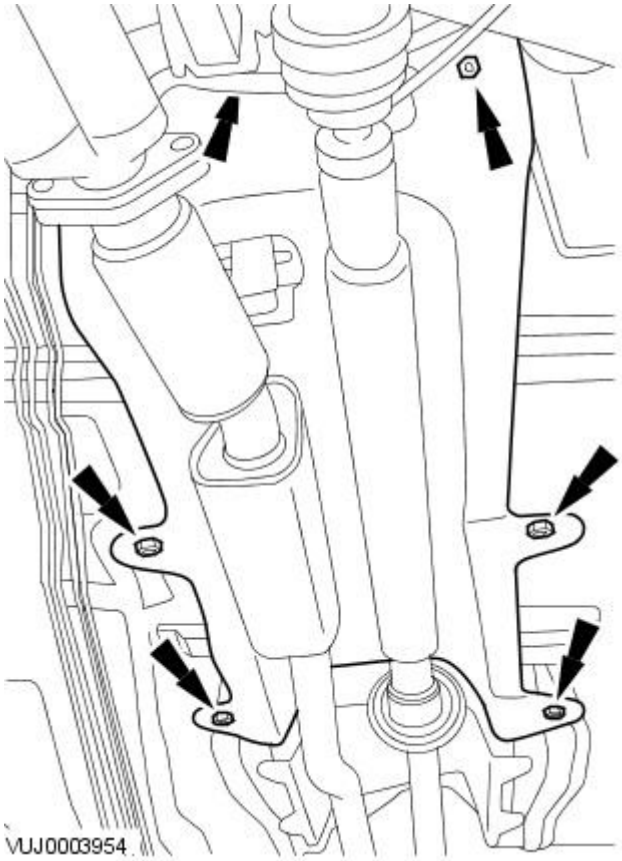

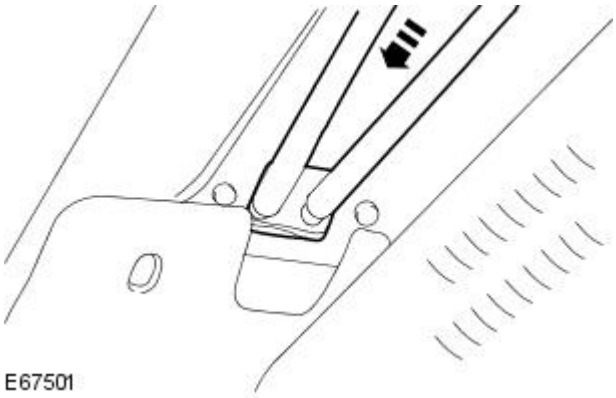

10. Reposition the gearshift cables from the subframe.

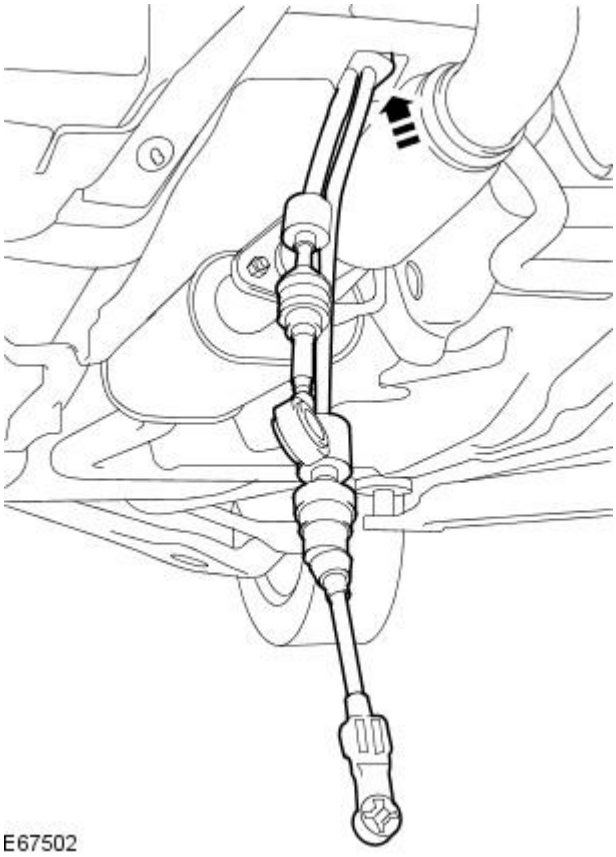

11. CAUTION: Make sure the gearshift cables are fed through the vehicle floor pan individually. Failure to follow this instruction may result in damage to the vehicle.

• NOTE: Remove the gearshift cables from inside the vehicle.

Remove the gearshift cables.

Installation

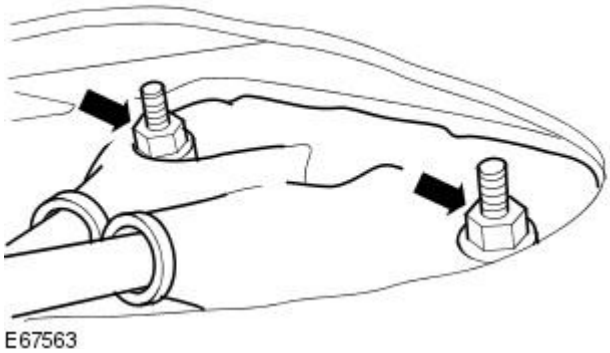

1. To install, reverse the removal procedure.

- Tighten to 10 Nm.

Manual Transmission / Transaxle External Controls - Gearshift LeverVehicles With: 5-Speed Manual Transmission - MT75

Removal and Installation

Removal

1. Remove the gearshift lever knob.

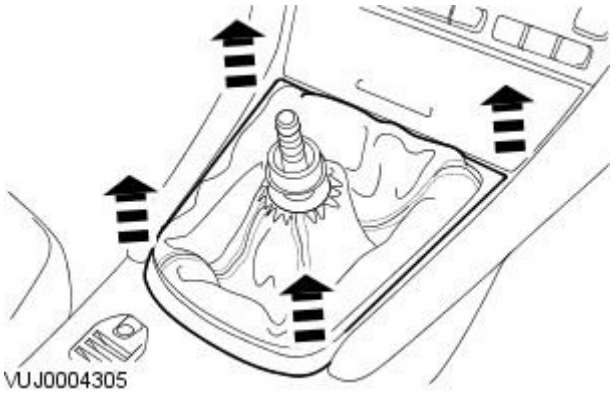

2. Detach the gearshift lever surround.

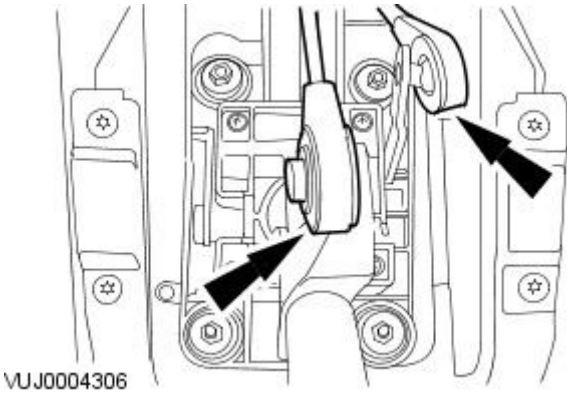

3. NOTE: Press the button to release the cable fitting before disconnecting the cable.

Disconnect the gearshift selector cables.

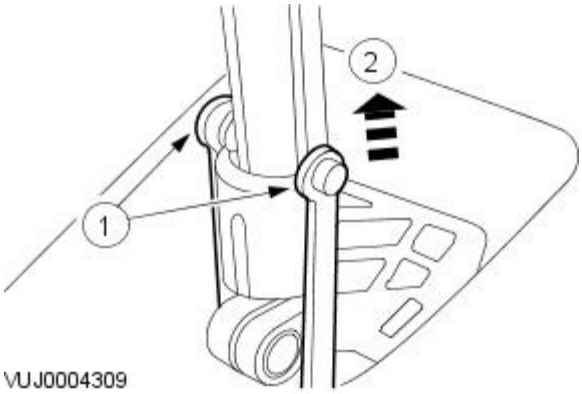

4. Remove the gearshift lever surround.

1. Detach the reverse gear selector rods.
2. Remove the gearshift lever surround.

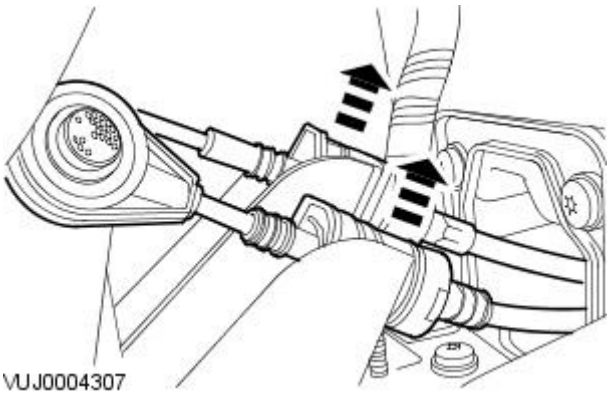

5. Disconnect the gearshift selector cables.

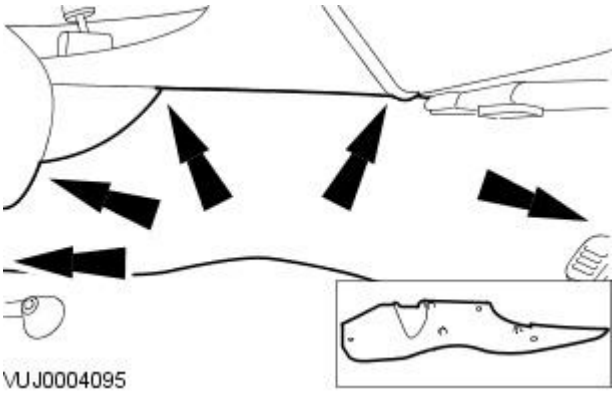

6. NOTE: Right-hand shown, left hand similar.

Remove the center console right-hand side trim panel.

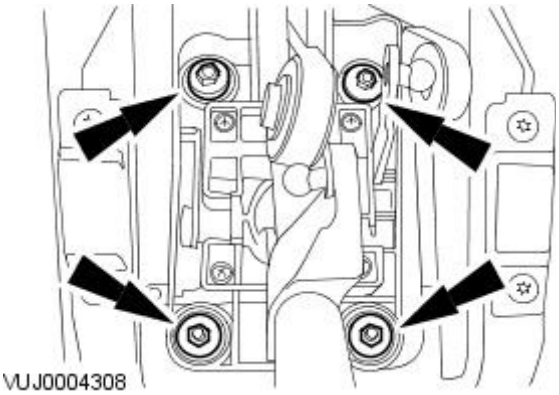

7. Remove the gearshift lever.

1. Remove the gearshift lever mounting retaining nuts.
2. Remove the gearshift lever.

Installation

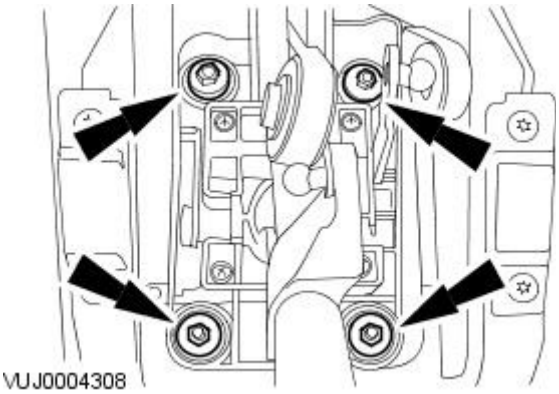

1. Tighten to 60 lb-ft.

Manual Transmission / Transaxle External Controls - Gearshift LeverVehicles With: 6-Speed Manual Transaxle - MMT6

Removal and Installation

Removal

1. Remove the gearshift lever knob.
   - Remove the gearshift lever spring.

2. Remove the restraints control module (RCM).
   For additional information, refer to: Restraints Control Module (RCM) (501-20B Supplemental Restraint System, Removal and Installation).

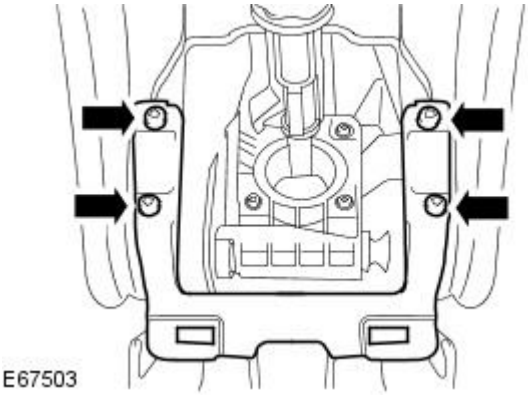

3. Remove the floor console mounting bracket.

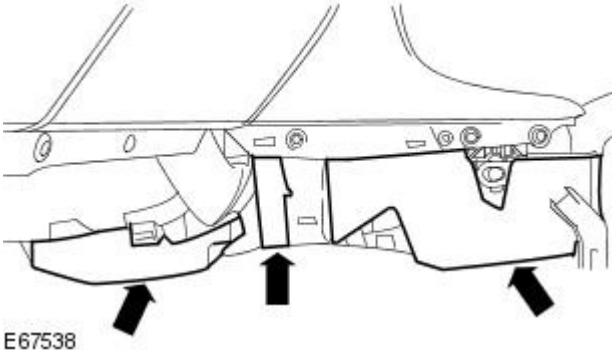

4. NOTE: Left -hand shown, right-hand similar.

   Remove the floor console sound absorbing foam.

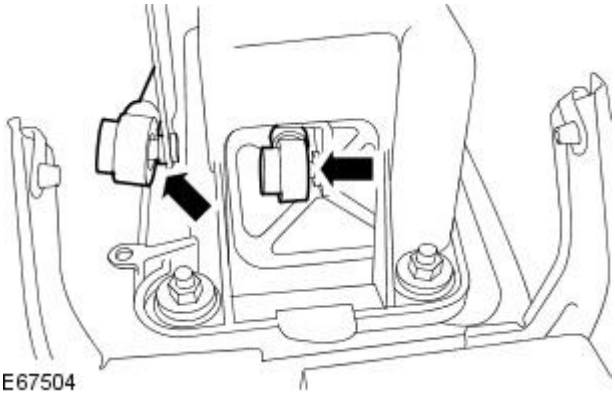

5. Disconnect the gearshift selector cables.

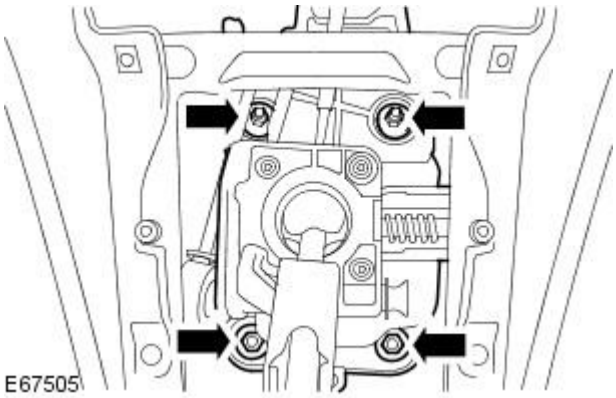

6. Detach the gearshift lever assembly to allow access to the gearshift cables.

- Remove the retaining nuts.

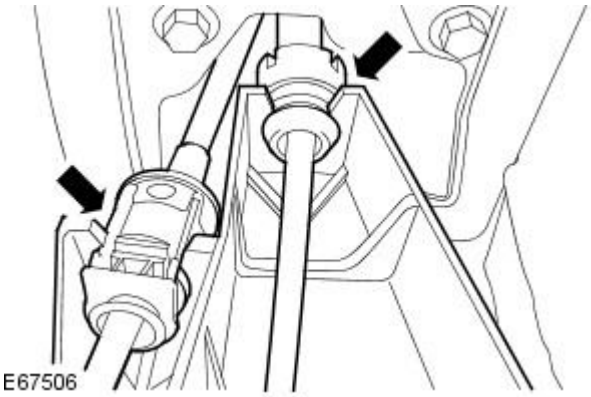

7. Disconnect the gearshift cables.

- Remove the gearshift lever assembly.

Installation

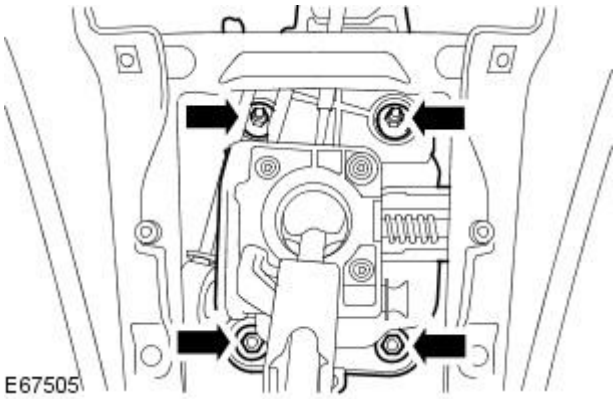

1. Tighten to 10 Nm.

Transfer Case -

Capacities

Description	Liters
Transfer case lubricant, drain and refill	0.50

Torque specifications

Description	Nm	Lb - ft	Lb - in
M8 pinion housing studs	35	26	-
M8 pinion housing bolts	35	26	-
Engine anti-roll restrictor mounting bracket top retaining bolts	55	41	-
Engine anti-roll restrictor mounting bracket side retaining bolts	35	26	-
Engine anti-roll restrictor mounting bracket bottom retaining nuts	35	26	-
Engine anti-roll restrictor mount retaining bolt	55	41	-
Transfer case support bracket top retaining bolts	25	18	-
Transfer case support bracket bottom retaining bolt	47	35	-
Transfer case retaining bolts*	80	59	-
Transfer case fill plug	20	15	-
Exhaust front pipe retaining clamp	55	41	-
Catalytic converter to catalytic converter mount bracket retaining bolts	25	18	-
Shock absorber and spring assembly securing nuts	25	18	-

*On vehicles prior to VIN J25640, if you are re-using fixings, tighten to 90 Nm.

Transfer Case - Transfer Case

Description and Operation

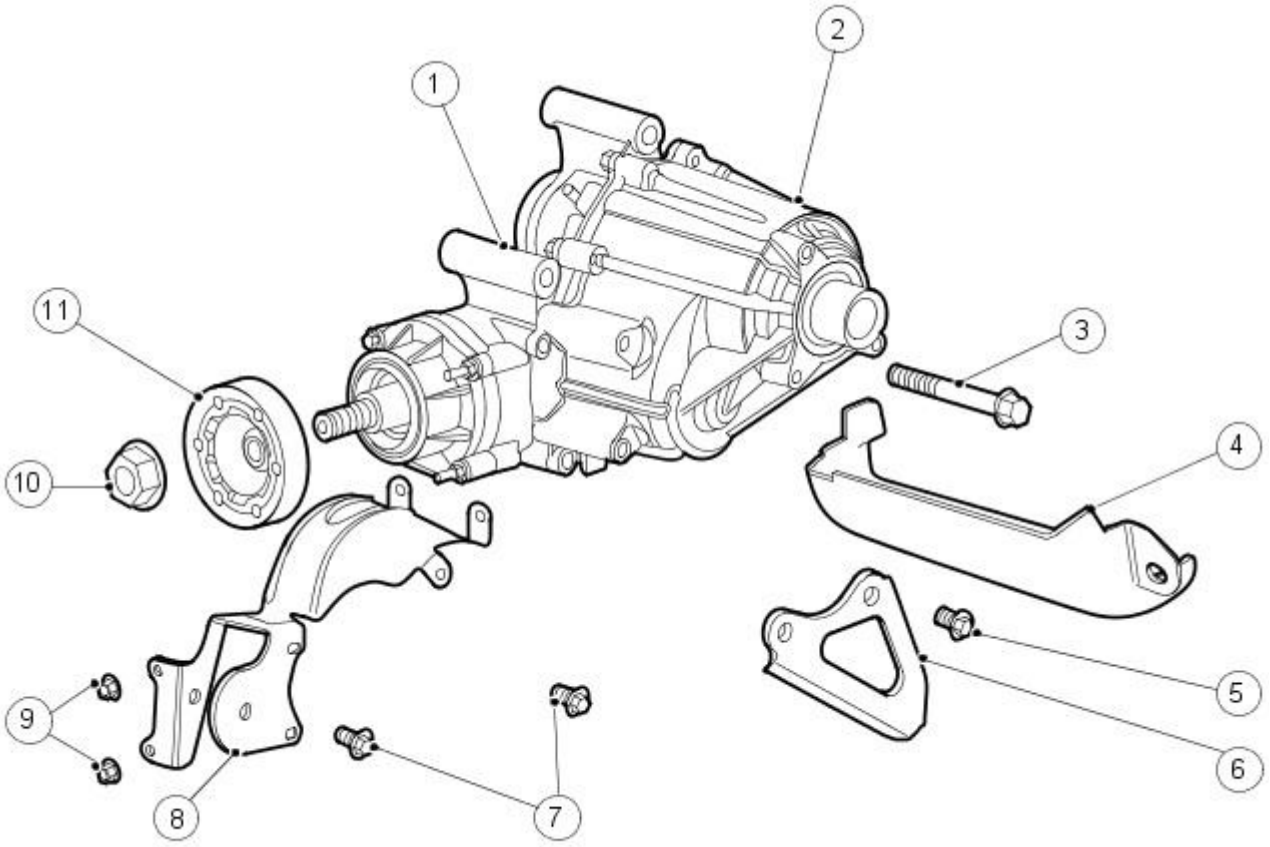

E30054

Item	Part Number	Description
1	—	Transfer case
2	—	Transfer case fill plug
3	—	Transfer case retaining bolt
4	—	Transfer case air cooling duct
5	—	Transfer case Y bracket retaining bolt
6	—	Transfer case Y bracket
7	—	Engine anti-roll restrictor mounting bracket retaining bolts
8	—	Engine anti-roll restrictor mounting bracket
9	—	Engine anti-roll restrictor mounting bracket retaining nuts
10	—	Companion flange retaining nut
11	—	Companion flange

The transfer case system consists of a power transfer unit, rear driveshaft, coupling device and rear axle. The power transfer unit is a gearbox that attaches to the transaxle. The right hand halfshaft engages to the transfer case link shaft which engages to the differential side gears as in a normal 4x2 application. The transfer case provides power to the driveshaft through a helical gear spline coupled to the transaxle differential case, a helical gear drop (idler gear) and hypoid/helical ring gear assembly and pinion set. Repair of the transfer case is limited to seals and gaskets. If any of the geared components, tappered roller bearings, case cover or internal shafts fail, a new transfer case must be installed. The transfer case is sealed from the transaxle and has its own sump. The transfer case uses SAE 75W140 synthetic gear lubricant. The fill plug is located on the top of the transfer case, under the engine anti roll restrictor mounting bracket.

Transfer Case - Transfer Case Draining and Filling

General Procedures

Special Tool(s)	
	Flange holding tool 205-053
	Flange remover/installer 204-068A
	Flange remover/installer boss 204-266
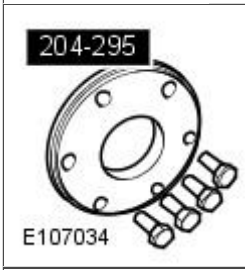	Flange remover/installer 204-295
	Seal extractor 308-375
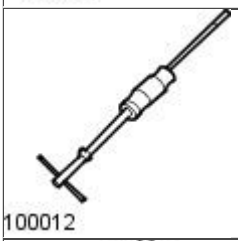	Slide hammer 100-012
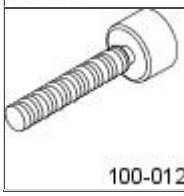	Slide hammer adapter 100-012-01

1. WARNING: Do not work on or under a vehicle supported only by a jack. Always support the vehicle on safety stands.

Raise and support the vehicle.

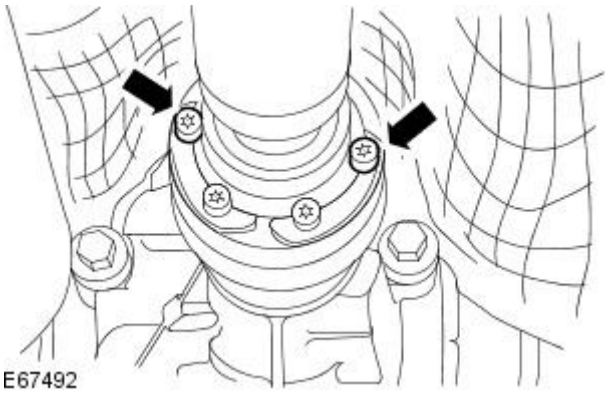

2. NOTE: Mark the position of the driveshaft in relation to the drive pinion flange.

Remove two opposing driveshaft universal joint retaining bolts.

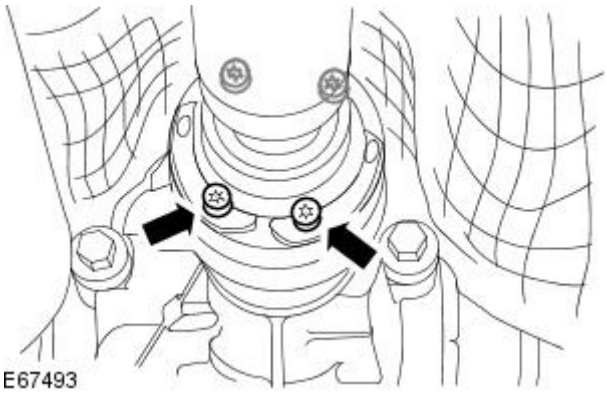

3. Loosen the remaining driveshaft universal joint retaining bolts.

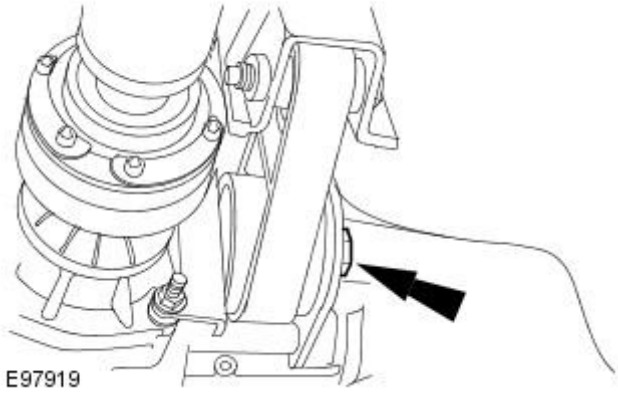

4. Detach the engine roll restrictor.

- Remove the engine roll restrictor retaining bolt.

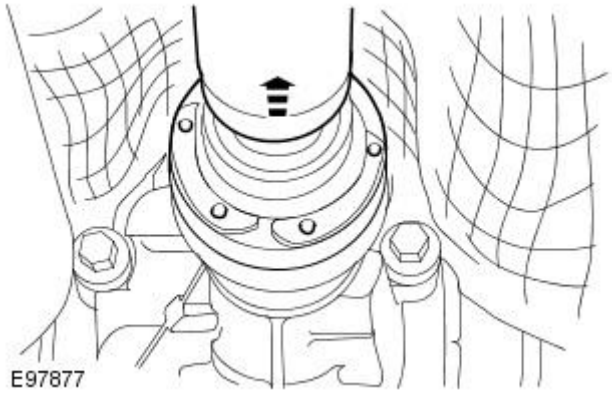

5. Detach the driveshaft from drive pinion flange.

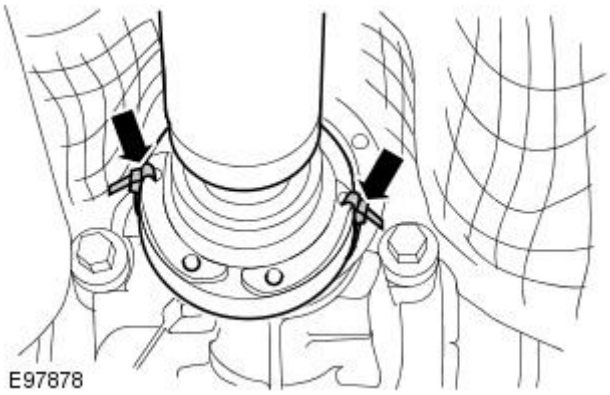

6. Using suitable tie straps, secure the outer casing of the driveshaft universal joint.

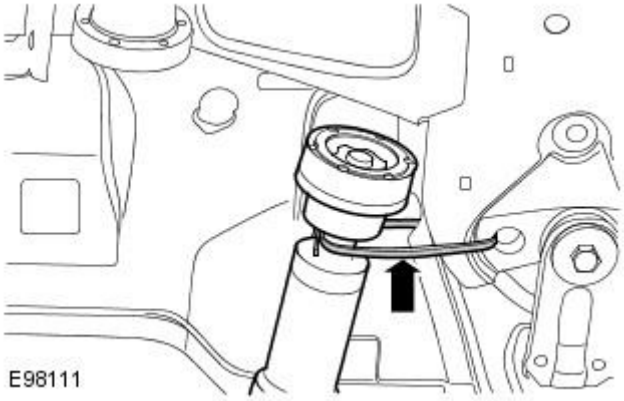

7. CAUTION: Make sure that the driveshaft does not hang on the center universal joint. Failure to follow this instruction may result in damage to the driveshaft.

Using suitable tie straps, secure the driveshaft to the subframe.

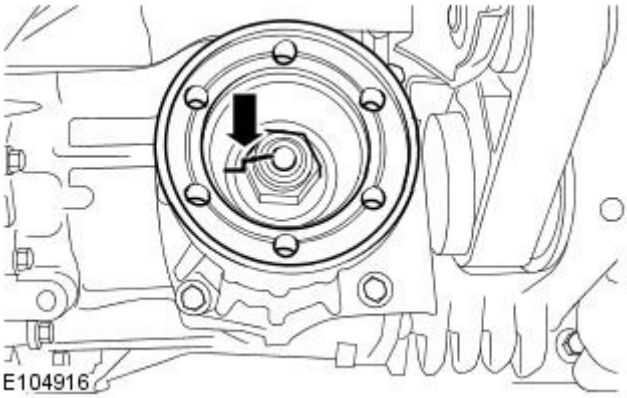

8. Mark the position of the retaining nut in relation to the companion flange and the companion flange in relation to the output shaft.

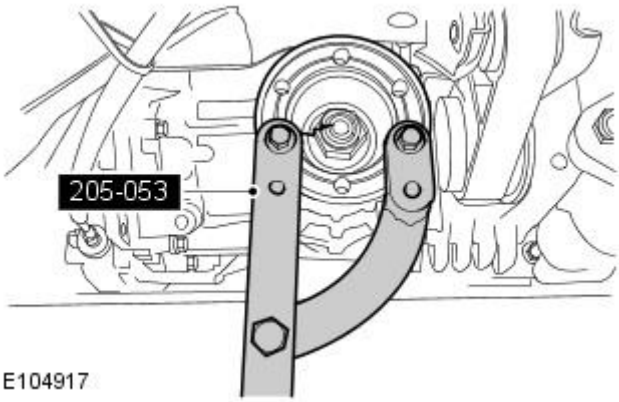

9. Install the special tool to the companion flange.

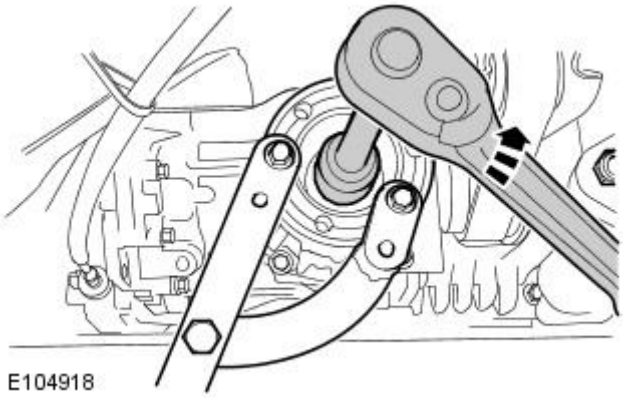

E104918

10. NOTE: Make a note of the complete number of turns required to remove the companion flange retaining nut.

• NOTE: Make a note of the number of degrees past the last complete rotation required to remove the companion flange retaining nut.

Remove the companion flange retaining nut.

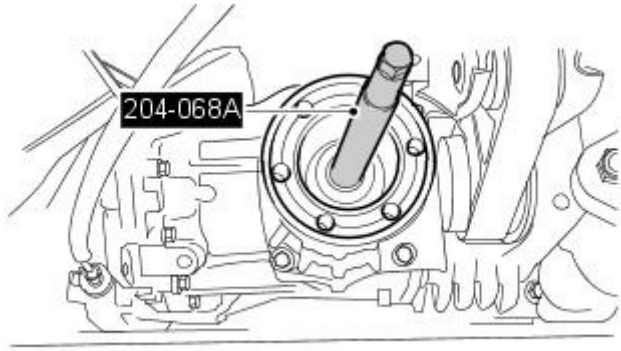

E104919

11. Install the special tool to the output shaft.

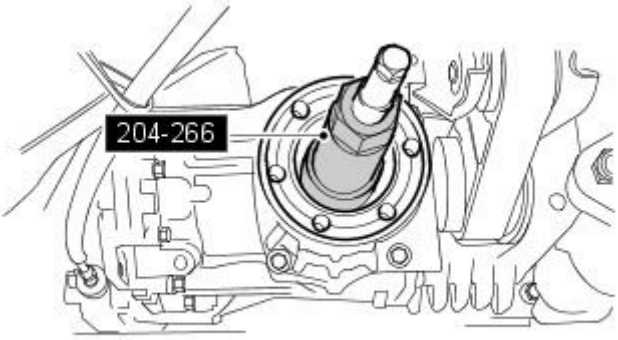

E104920

12. Install special tool 204-266 to special tool 204-068A.

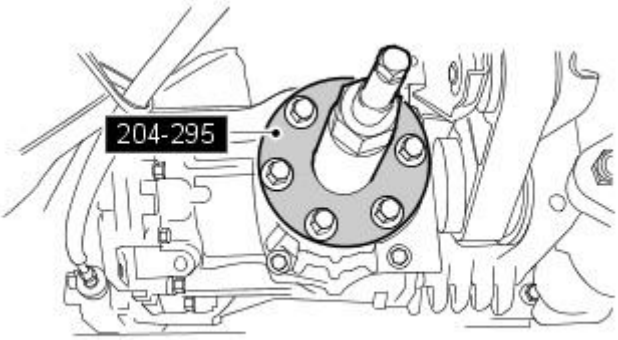

E104921

13. Install the special tool to the companion flange.

- Install the six retaining bolts.

14. Remove the companion flange.

- Rotate the special tool counter-clockwise.

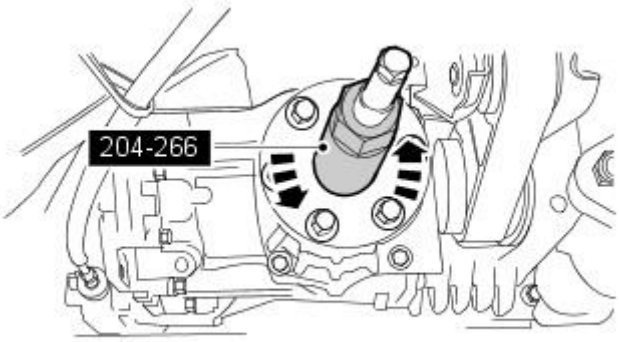

E104922

15. Using the special tools remove the pinion oil seal.

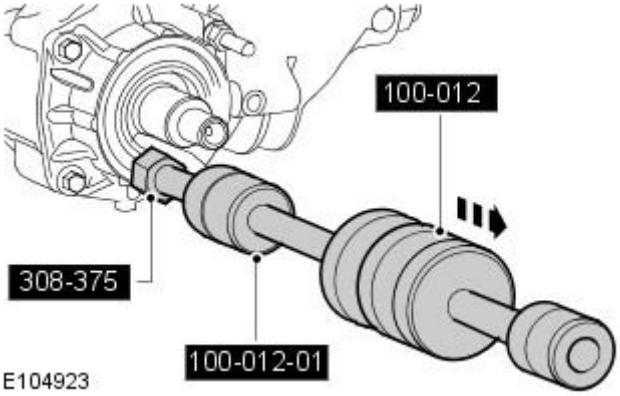

E104923

16. NOTE: Make sure the vehicle is completely level when draining the transfer case.

Allow the oil to fully drain into a suitable container.

17. Using the special tool 204-264 fully seat the new oil seal.

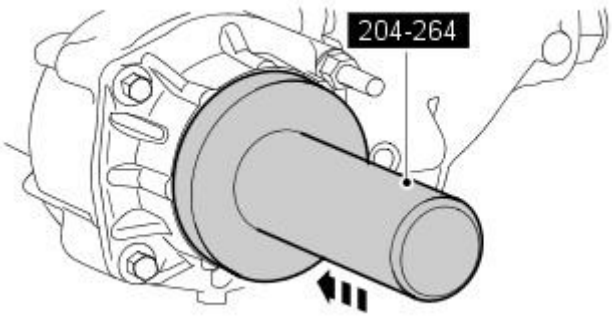

E104924

18. Install the companion flange to the output shaft.

- Lubricate the companion flange splines with SAE 75W140 lubricant.
- Install the companion flange making sure that the flange and output shaft marks are aligned.
- Install special tool 204-295 to the companion flange.
- Install special tool 204-266.
- Using the special tools install the companion flange to the output shaft by 10mm.

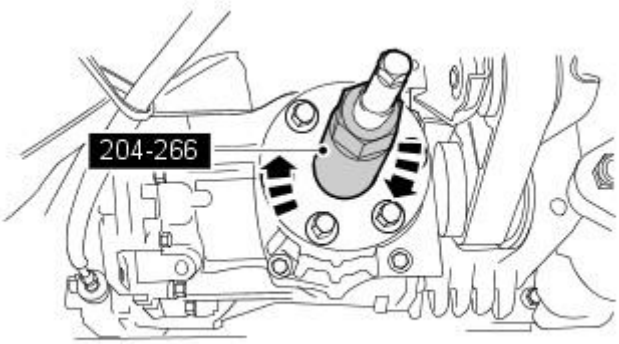

E104926

19. Remove the special tools.

20. Using a suitable solvent/cleaner, remove all traces of oil from the transfer case rear output flange and exposed threads of the output shaft.

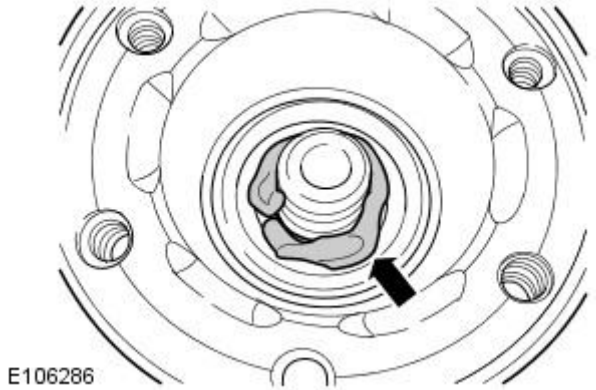

21. Apply sealant (C2S 12099) to the area of transfer case rear output flange where securing nut seats.

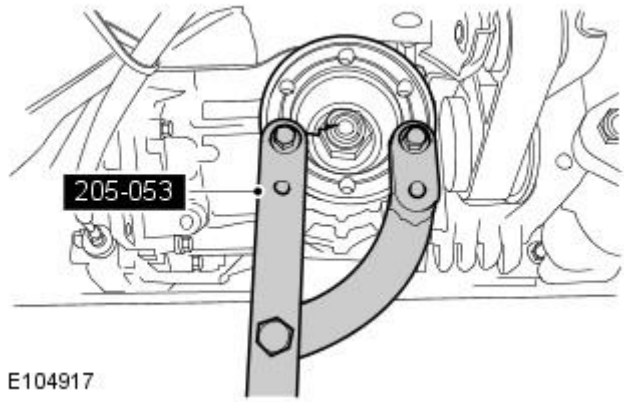

22. Install the special tool to the companion flange.

23. Apply sealant (C2S 12099) to the mating face of the transfer case rear output flange securing nut.

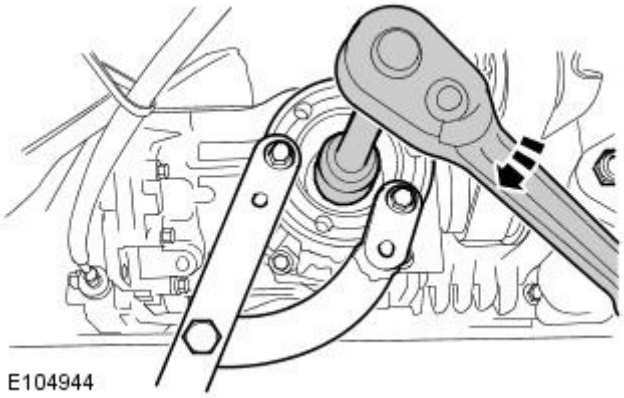

24. Install the companion flange securing nut.

- Start the nut at the noted number of degrees before the start of the first full rotation.
- Tighten to the noted full number of rotations.
- Make sure that the original marks between the companion flange, securing nut and output shaft are aligned.

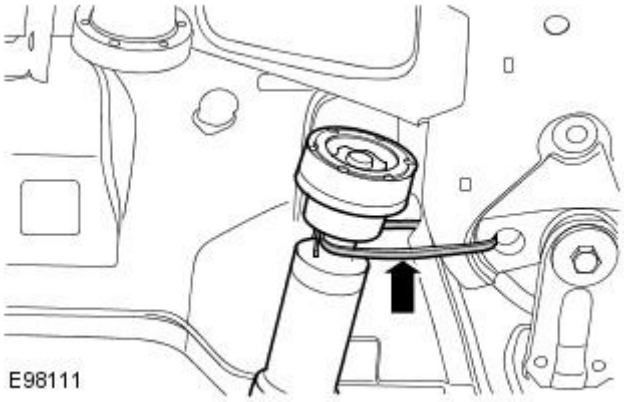

25. CAUTION: Make sure that the driveshaft does not hang on the center universal joint. Failure to follow this instruction may result in damage to the driveshaft.

Cut and remove the tie straps securing the outer casing of the driveshaft universal joint.

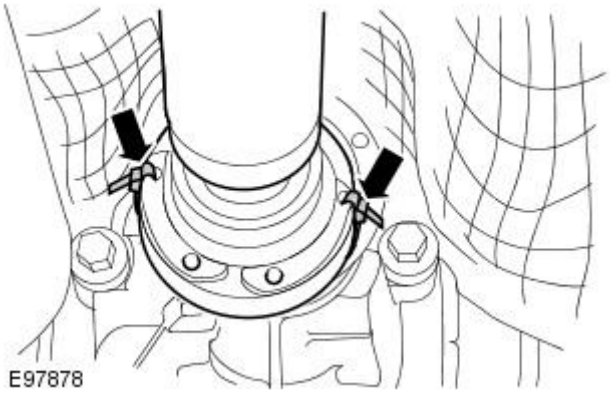

26. Cut and remove the tie straps securing the outer casing of the driveshaft universal joint.

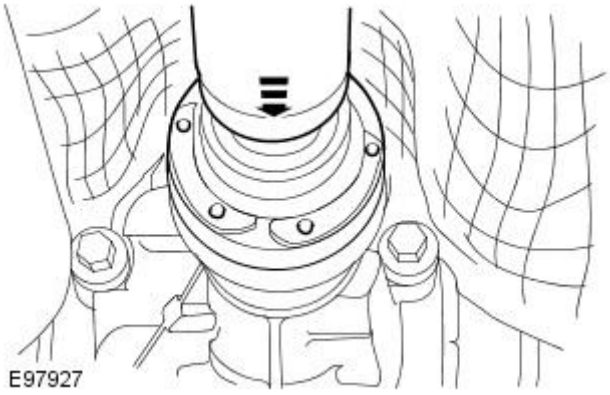

27. Connect the driveshaft to the transfer case.

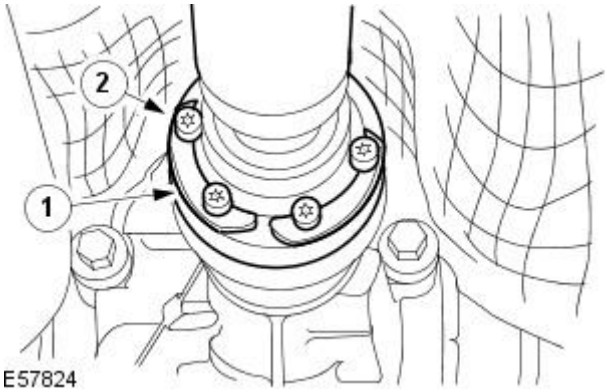

28. Attach the driveshaft universal joint.

1. Attach the driveshaft universal joint.
2. Install new driveshaft retaining bolts.

- Tighten to 44 Nm.

29. Attach the engine roll restrictor.

- Tighten to 80 Nm.

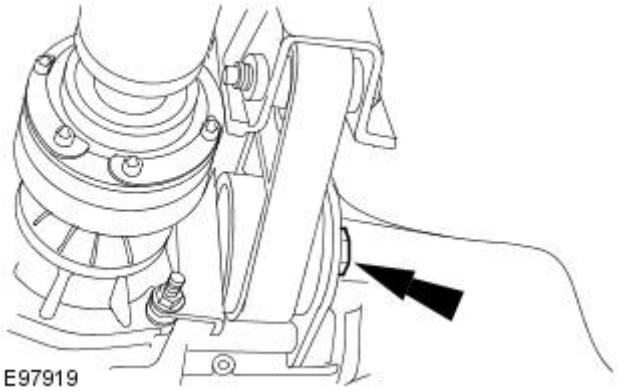
E97919

30. WARNING: Do not work on or under a vehicle supported only by a jack. Always support the vehicle on safety stands.

• NOTE: The lower lip of the sill must be 540mm from the floor.

Raise and support the left hand side of the vehicle.

- Remove the vehicle from the lift.
- Raise the vehicle using two jacks.

E104945

31. Fill the transfer case with 400ml of oil.

- Tighten the filler plug to 20Nm.

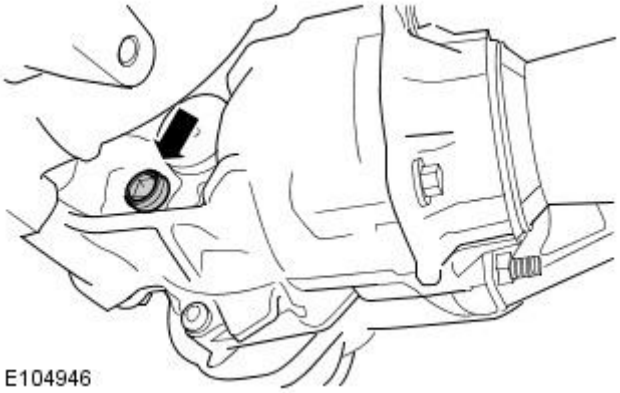
E104946

Published: 11-May-2011

Transfer Case - Halfshaft Seal RH

In-vehicle Repair

Removal

1. Remove the right-hand halfshaft seal.
   For additional information, refer to Transfer Case in this section.

Transfer Case - Transfer Case Rear Output Shaft Seal

In-vehicle Repair

Special Tool(s)	
	Flange holding tool 205-053
	Flange remover/installer 204-068A
	Flange remover/installer boss 204-266
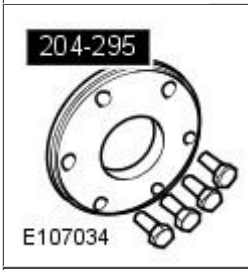	Flange remover/installer 204-295
	Seal extractor 308-375
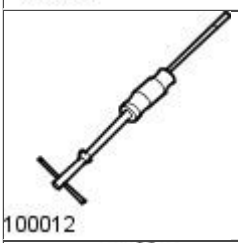	Slide hammer 100-012
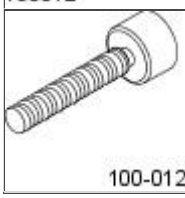	Slide hammer adapter 100-012-01

Removal

1. WARNING: Do not work on or under a vehicle supported only by a jack. Always support the vehicle on safety stands.

Raise and support the vehicle.

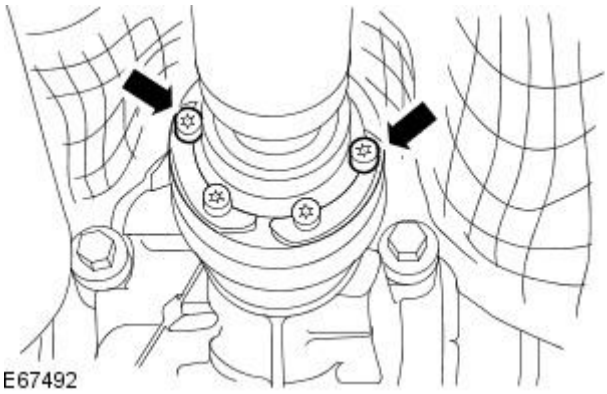

2. NOTE: Mark the position of the driveshaft in relation to the drive pinion flange.

Remove two opposing driveshaft universal joint retaining bolts.

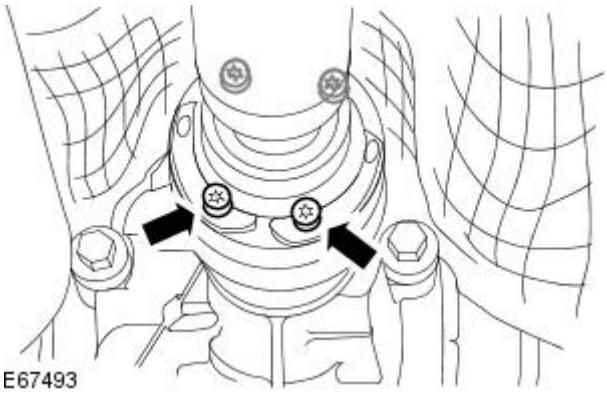

3. Loosen the remaining driveshaft universal joint retaining bolts.

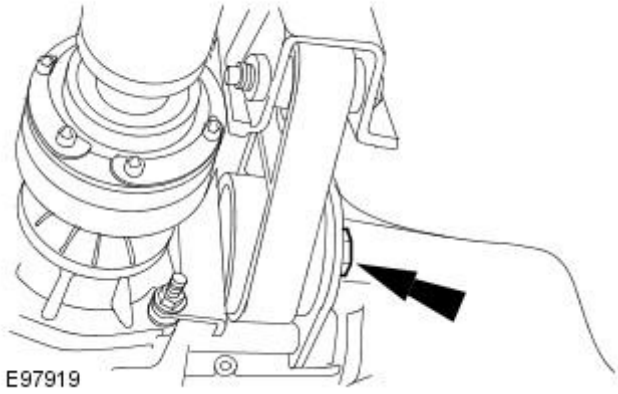

4. Detach the engine roll restrictor.

- Remove the engine roll restrictor retaining bolt.

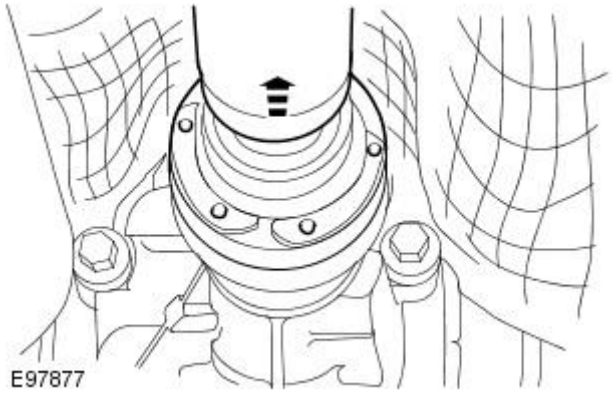

5. Detach the driveshaft from drive pinion flange.

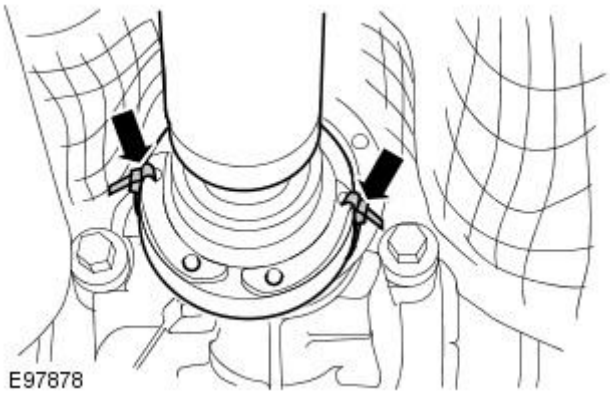

6. Using suitable tie straps, secure the outer casing of the driveshaft universal joint.

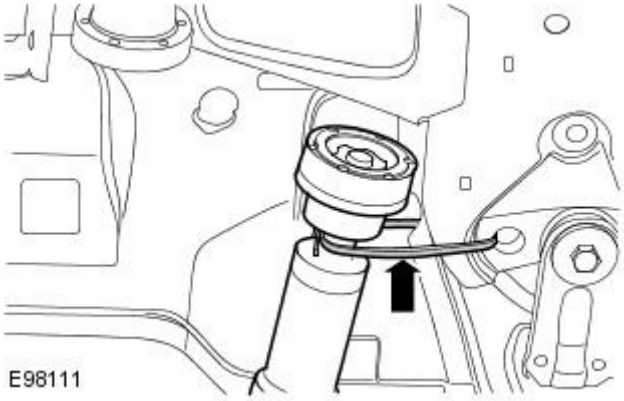

7. CAUTION: Make sure that the driveshaft does not hang on the center universal joint. Failure to follow this instruction may result in damage to the driveshaft.

Using suitable tie straps, secure the driveshaft to the subframe.

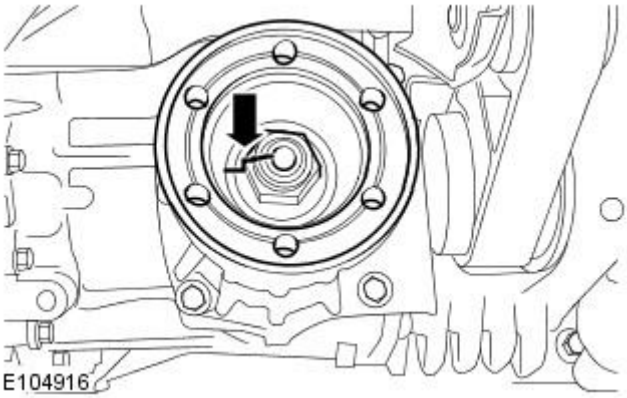

8. Mark the position of the retaining nut in relation to the companion flange and the companion flange in relation to the output shaft.

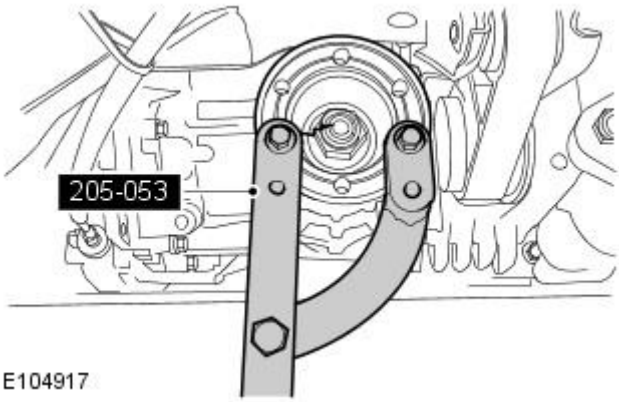

9. Install the special tool to the companion flange.

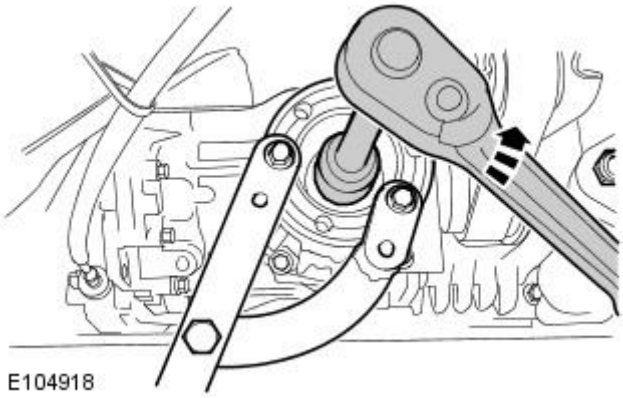

E104918

10. NOTE: Make a note of the complete number of turns required to remove the companion flange retaining nut.

• NOTE: Make a note of the number of degrees past the last complete rotation required to remove the companion flange retaining nut.

Remove the companion flange retaining nut.

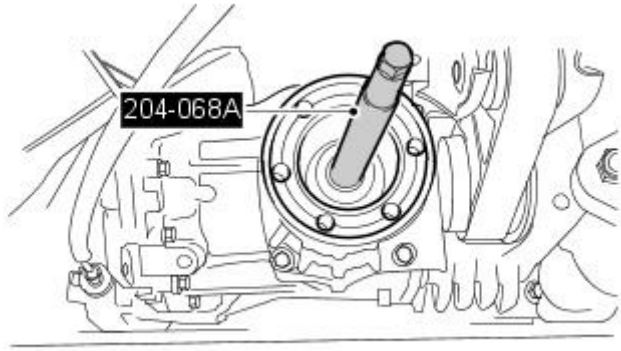

E104919

11. Install the special tool to the output shaft.

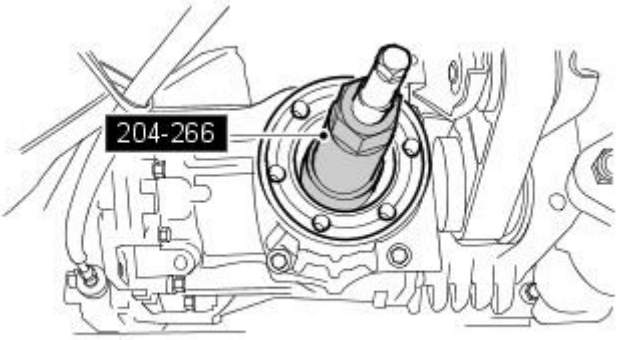

E104920

12. Install special tool 204-266 to special tool 204-268A.

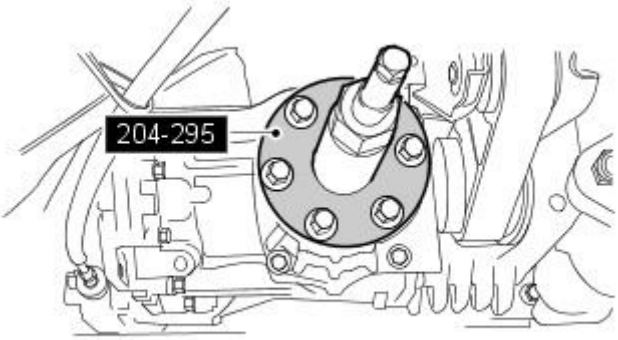

E104921

13. Install the special tool to the companion flange.

- Install the six retaining bolts.

14. Remove the companion flange.

- Rotate the special tool anti-clockwise.

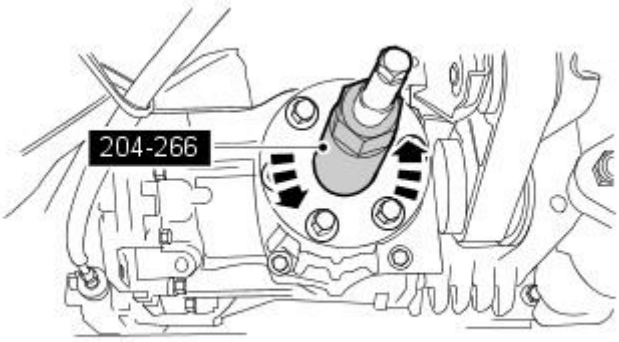

E104922

15. Using the special tools remove the pinion oil seal.

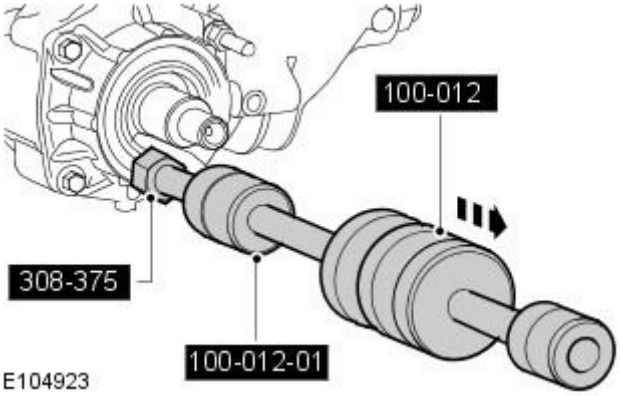

E104923

16. NOTE: Make sure the vehicle is completely level when draining the transfer case.

Allow the oil to fully drain into a suitable container.

Installation

1. Using the special tool 204-268 fully seat the new oil seal.

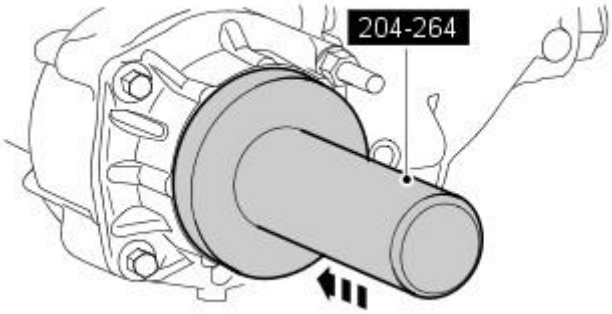

E104924

2. Install the companion flange to the output shaft.

- Lubricate the companion flange splines with SAE 75W140 lubricant.
- Install the companion flange making sure that the flange and output shaft marks are aligned.
- Install special tool 204-295 to the companion flange.
- Install special tool 204-266.
- Using the special tools install the companion flange to the output shaft by 10mm.

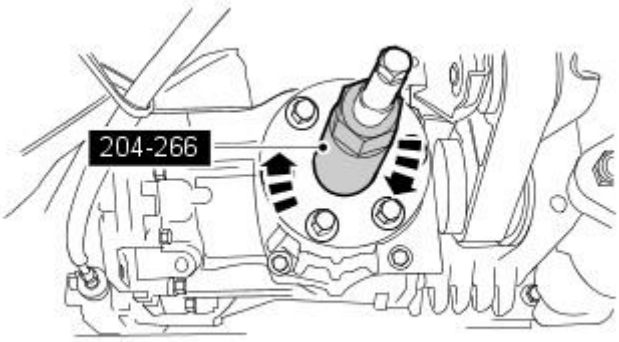

E104926

3. Remove the special tools.

4. Using a suitable solvent/cleaner, remove all traces of oil from the transfer case rear output flange and exposed threads of the output shaft.

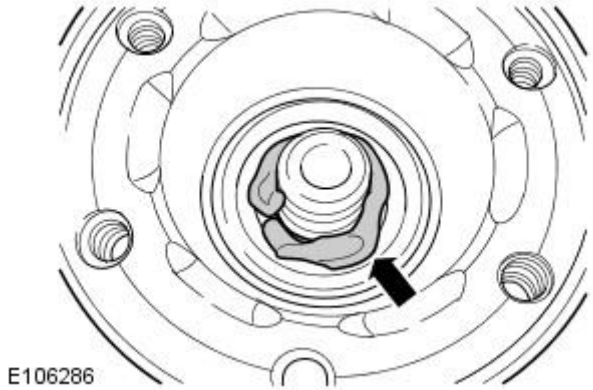

5. Apply sealant (C2S 12099) to the area of transfer case rear output flange where securing nut seats.

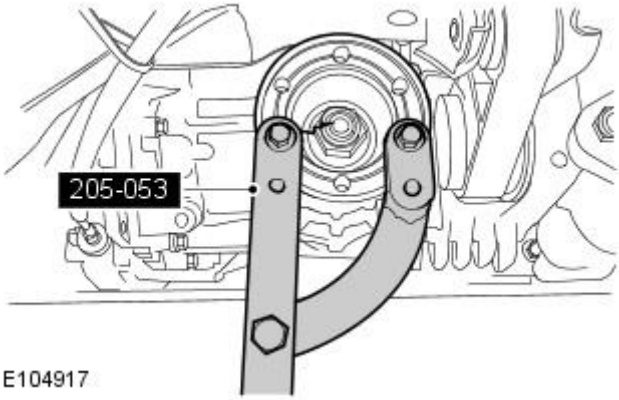

6. Install the special tool to the companion flange.

7. Apply sealant (C2S 12099) to the mating face of the transfer case rear output flange securing nut.

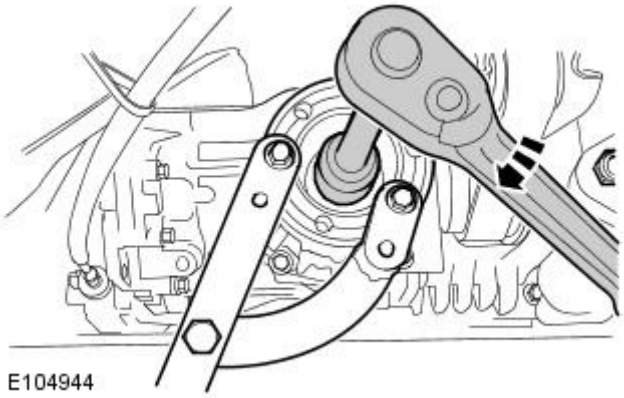

8. Install the companion flange securing nut.
   - Start the nut at the noted number of degrees before the start of the first full rotation.
   - Tighten to the noted full number of rotations.
   - Make sure that the original marks between the companion flange, securing nut and output shaft are aligned.

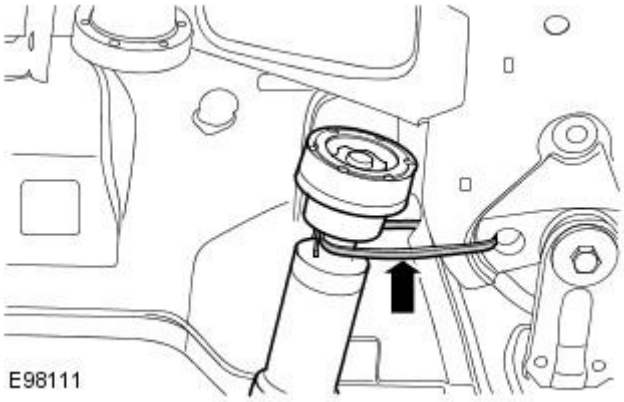

9. CAUTION: Make sure that the driveshaft does not hang on the center universal joint. Failure to follow this instruction may result in damage to the driveshaft.

Cut and remove the tie straps securing the outer casing of the driveshaft universal joint.

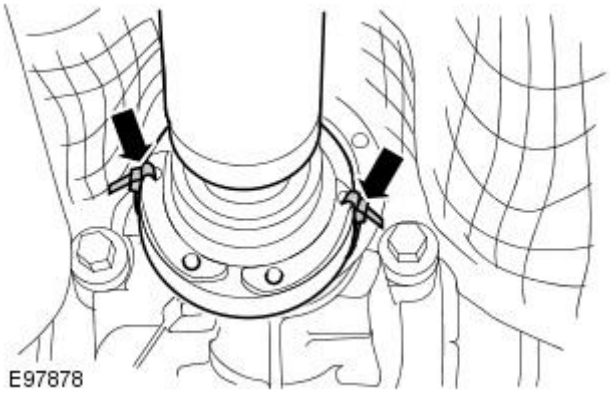

10. Cut and remove the tie straps securing the outer casing of the driveshaft universal joint.

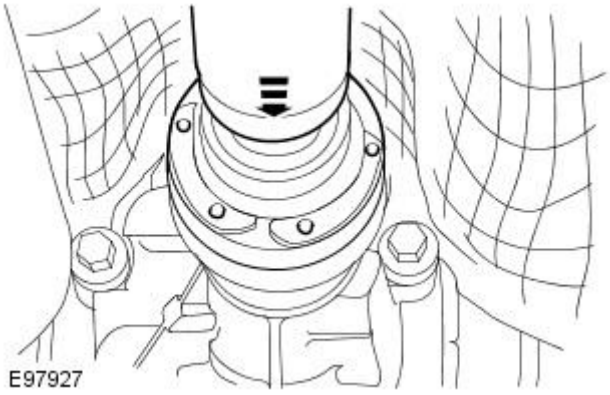

11. Connect the driveshaft to the transfer case.

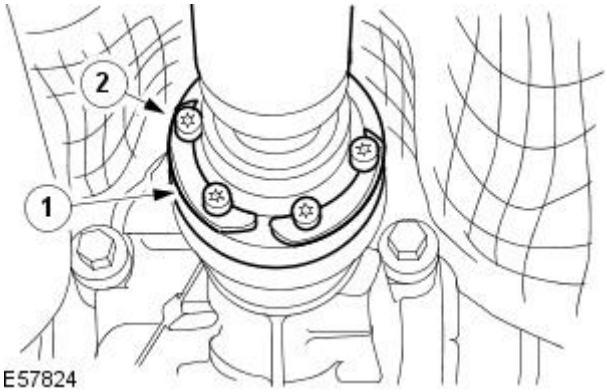

12. Attach the driveshaft universal joint.

1. Attach the driveshaft universal joint.
2. Install new driveshaft retaining bolts.

- Tighten to 44 Nm.

13. Attach the engine roll restrictor.

- Tighten to 80 Nm.

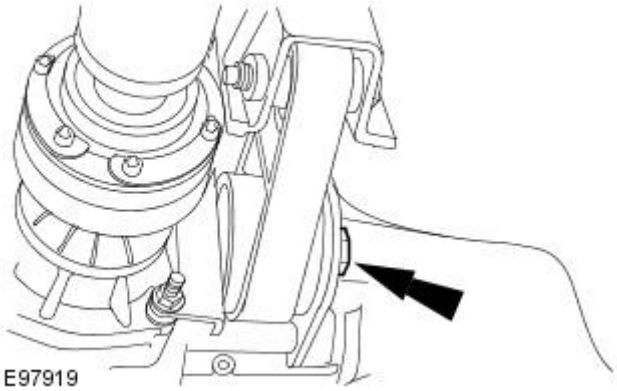
E97919

14. WARNING: Do not work on or under a vehicle supported only by a jack. Always support the vehicle on safety stands.

• NOTE: The lower lip of the sill must be 540mm from the floor.

Raise and support the left hand side of the vehicle.

- Remove the vehicle from the lift.
- Raise the vehicle using two jacks.

E104945

15. Fill the transfer case with 400ml of oil.

- Tighten the filler plug to 20Nm.

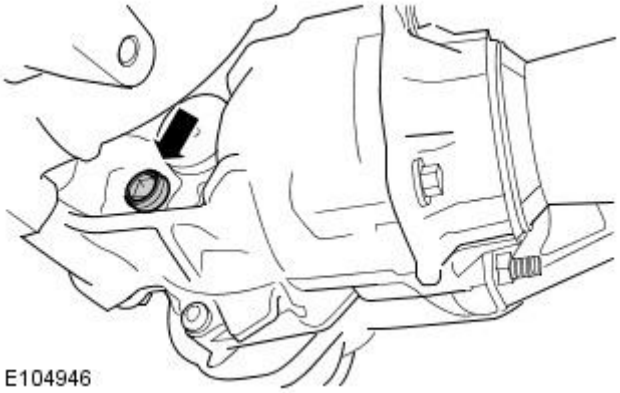
E104946

Transfer Case - Transfer Case

Removal

Special Tool(s)	
100-012-03	Slide hammer adapter 100-012-03
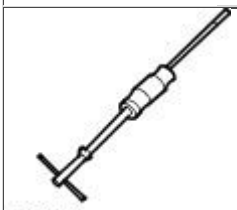 100012	Slide hammer 100-012
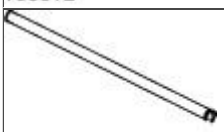 100-012-02	100-012-02 Slide hammer shaft
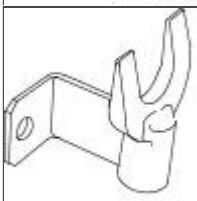 307-442	Right-hand halfshaft splitter 307-442
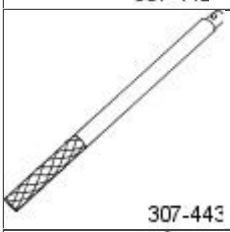 307-443	Right-hand halfshaft splitter handle 307-443
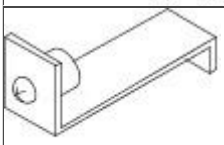 307-446	Link shaft limiter bracket 307-446
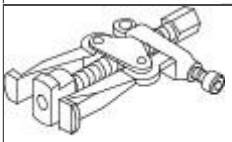 308-208	Link shaft oil seal remover 308-208
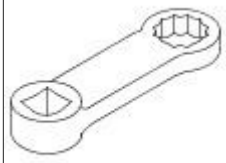 E46430	Torque adaptor 303-1069

Removal

All vehicles

1. Position the front wheels in a straight ahead position and centralize the steering wheel.
   - Lock in position and remove the ignition key.

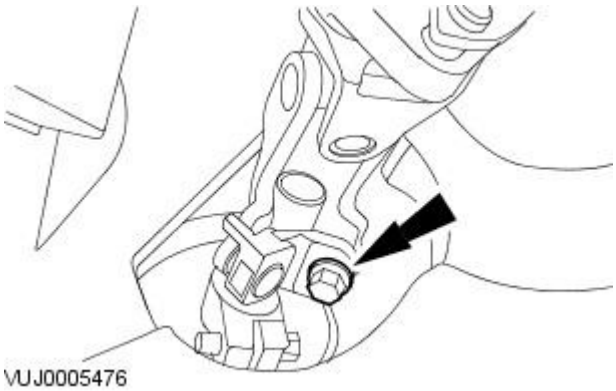

2. Detach the steering column.

- Remove and discard the steering column lower retaining bolt.

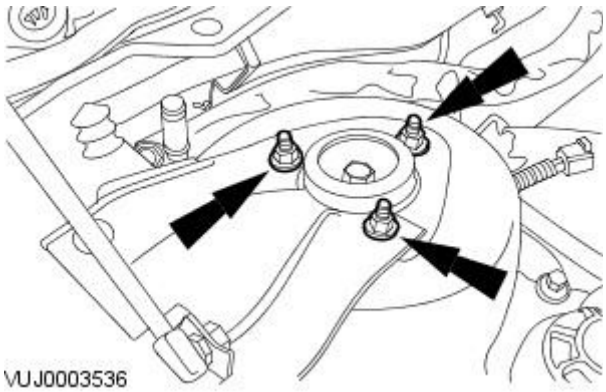

3. Loosen the shock absorber and spring assembly securing nuts.

4. Remove the right-hand front wheel and tire.
For additional information, refer to: Wheel and Tire (204-04 Wheels and Tires, Removal and Installation).

5. Remove the fender splash shield access panel.

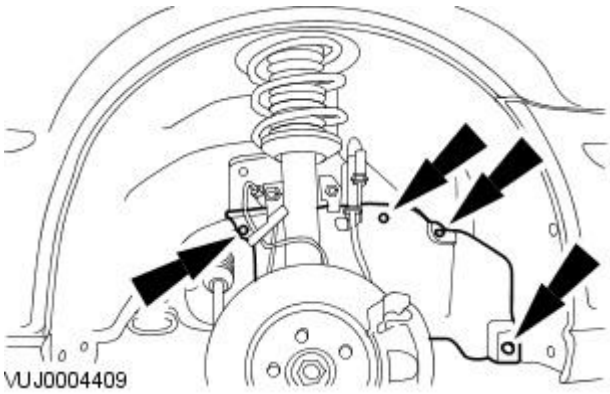

6. Remove the front pipe.

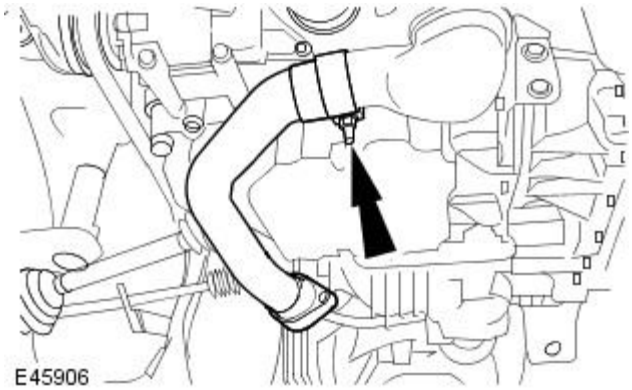

7. Remove the muffler inlet pipe.
For additional information, refer to: Muffler Inlet Pipe - 2.0L NA V6 - AJV6/2.5L NA V6 - AJV6/3.0L NA V6 - AJ27 (309-00 Exhaust System, Removal and Installation).

Vehicles with automatic transmission

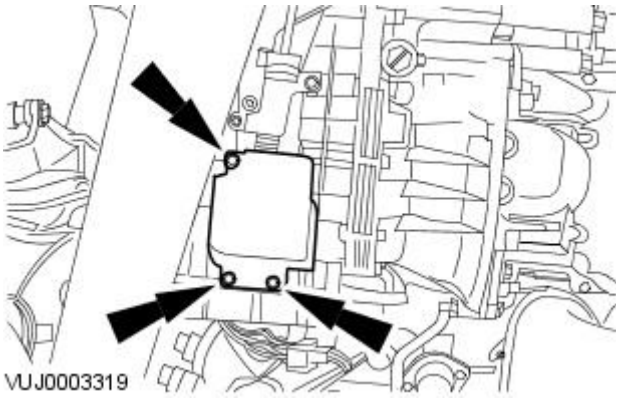

8. Remove the selector lever cable shield.

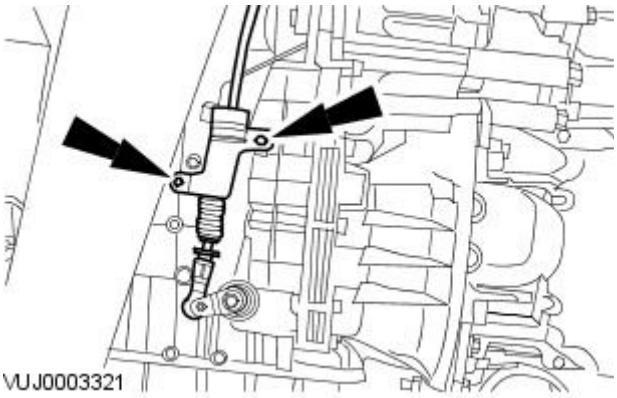

9. Detach the selector lever cable bracket.

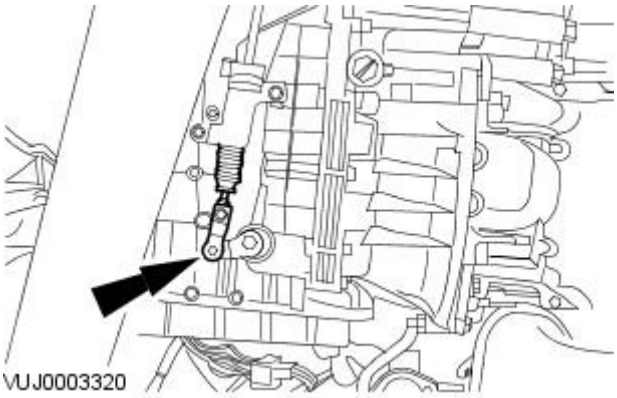

10. Disconnect the selector lever cable.

11. Drain the transmission fluid.
For additional information, refer to: Transmission Fluid Drain and Refill (307-01B Automatic Transmission/Transaxle - Vehicles With: 6-Speed Automatic Transaxle - AWF21, General Procedures).

Vehicles with manual transmission

12. Drain the transmission fluid. For additional information, refer to: (308-03 Manual Transmission/Transaxle)

Transaxle Draining and Filling - Vehicles With: 5-Speed Manual Transmission - MT75 (General Procedures),
Transaxle Draining and Filling - Vehicles With: 5-Speed Manual Transmission - MT75 (General Procedures).

All vehicles

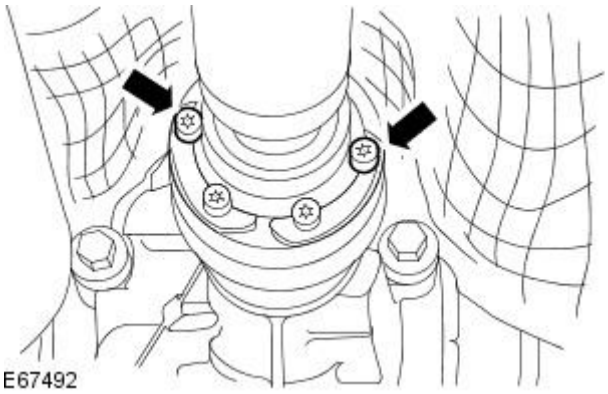

13. NOTE: Mark the position of the driveshaft in relation to the drive pinion flange.

Remove two opposing driveshaft universal joint retaining bolts.

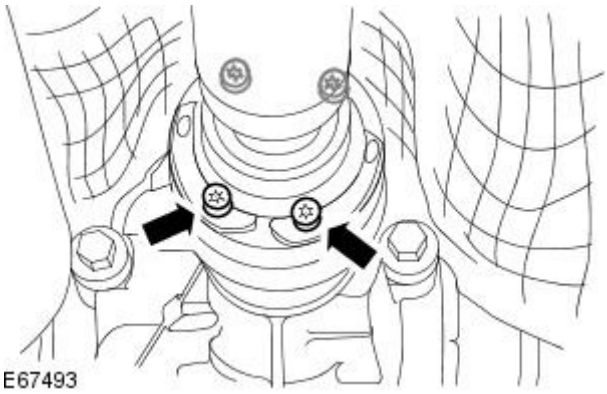

14. Loosen the remaining driveshaft universal joint retaining bolts.

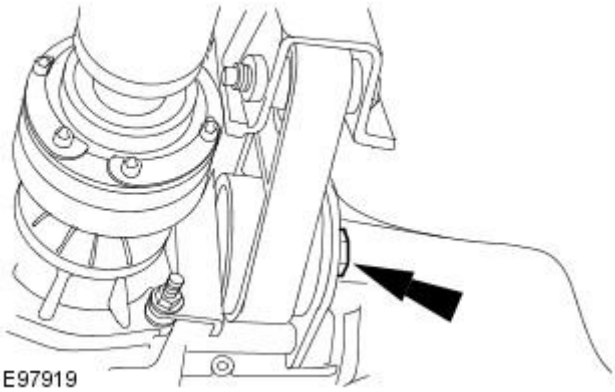

15. Detach the engine roll restrictor.

- Remove the engine roll restrictor retaining bolt.

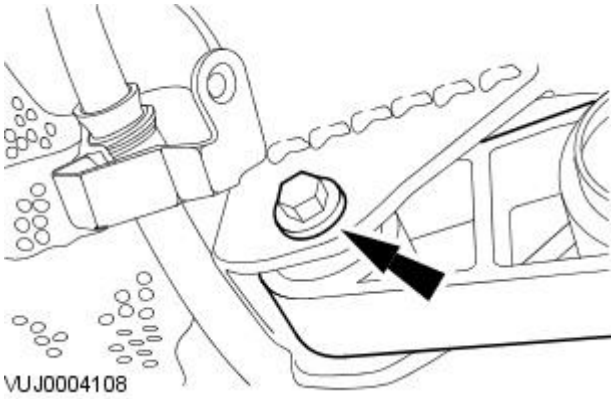

16. Remove the engine roll restrictor.

- Remove the engine roll restrictor retaining bolt.

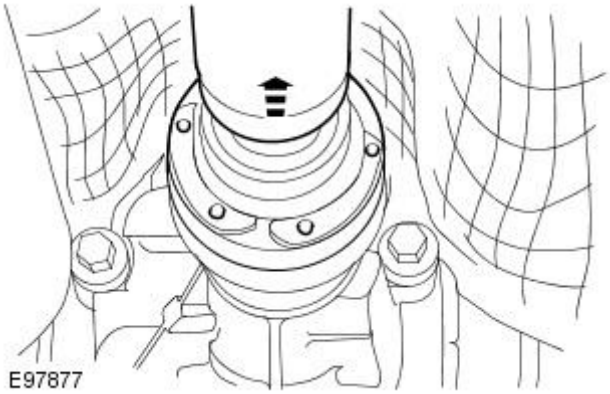

17. Detach the driveshaft from drive pinion flange.

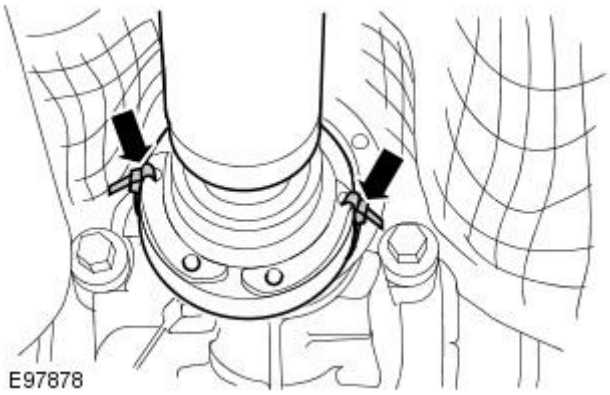

18. Using suitable tie straps, secure the outer casing of the driveshaft universal joint.

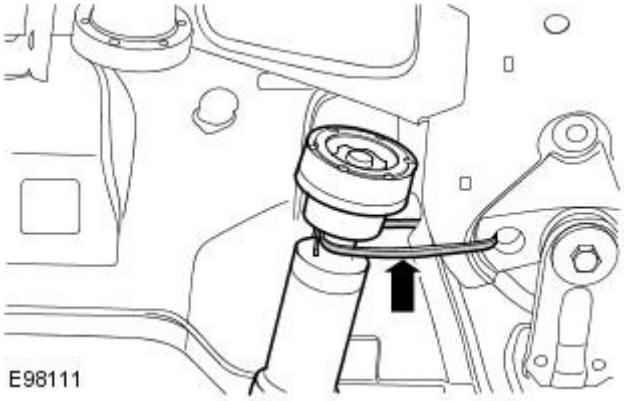

19. CAUTION: Make sure that the driveshaft does not hang on the center universal joint. Failure to follow this instruction may result in damage to the driveshaft.

Using suitable tie straps, secure the driveshaft to the subframe

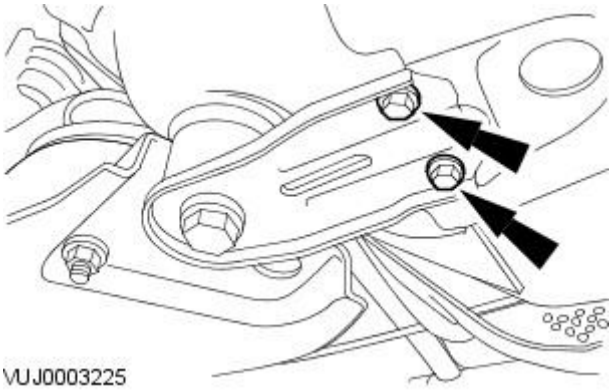

20. NOTE: Left-hand shown, right-hand similar.

Remove the front subframe reinforcement plate retaining bolts.

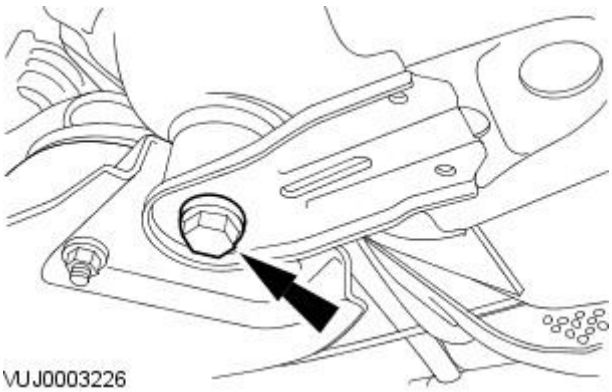

21. Remove the right-hand front subframe rear mount retaining bolt.

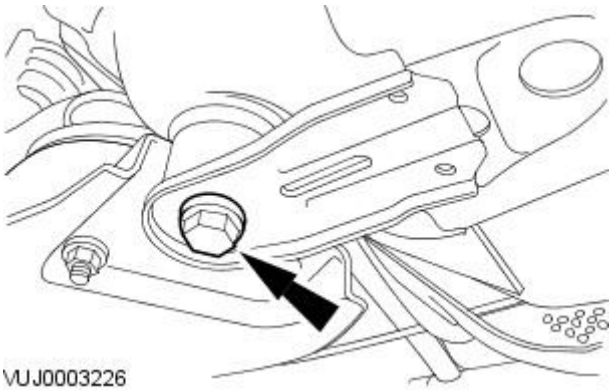

22. Loosen the left-hand front subframe rear mount retaining bolt.

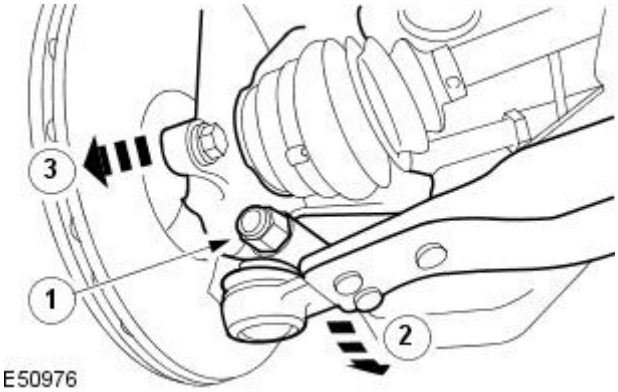

23. CAUTION: Make sure the constant velocity (CV) joint boot is protected. Failure to follow this instruction may result in damage to the CV joint boot.

Detach the lower arm from the wheel knuckle.

1. Remove the lower arm ball joint retaining nut and bolt.
2. Reposition the lower arm.
3. Reposition the wheel knuckle.

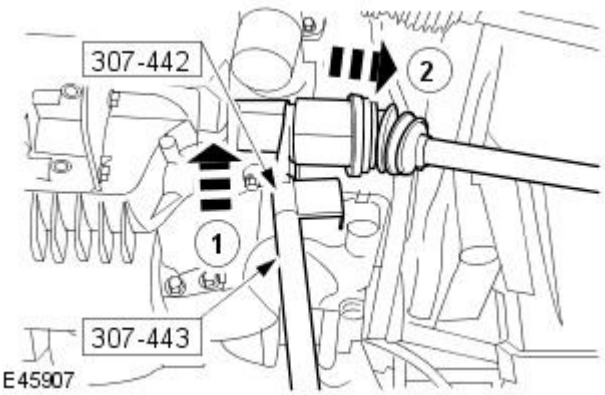

24. CAUTIONS:

To prevent damage to the transfer box internal seal, make sure that the link shaft is not retracted further than 200 mm (7.87 inches) from the transfer case.

Make sure the halfshaft CV joints do not over articulate. Failure to follow this instruction may result in damage to the CV joints.

Using the special tools, detach the halfshaft.

1. Align the special tools to the halfshaft.
2. Detach the halfshaft.

- Remove and discard the halfshaft seal.

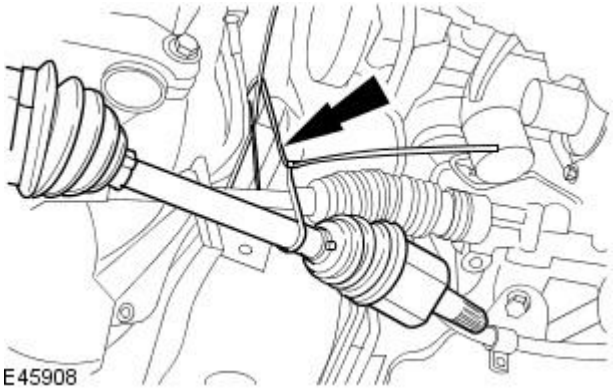

25. CAUTION: Make sure the halfshaft constant velocity (CV) joints do not over articulate. Failure to follow this instruction may result in damage to the CV joints.

Support the halfshaft.

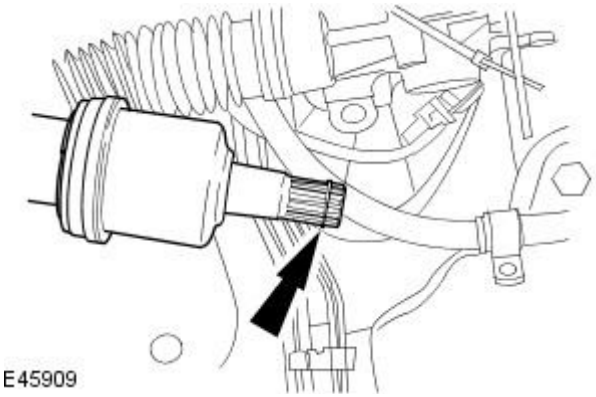

26. Remove and discard the halfshaft snap ring.

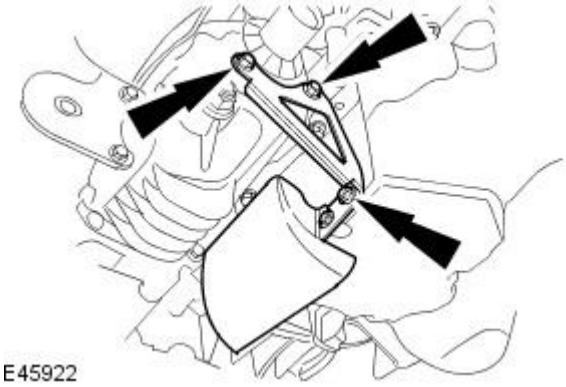

27. Remove the transfer case support bracket.

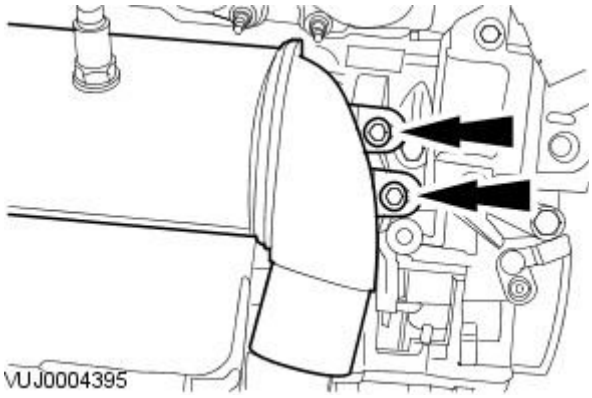

28. Remove the catalytic converter mount bracket retaining bolts.

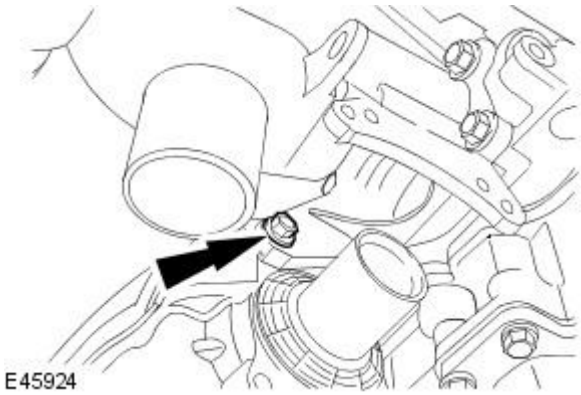

29. Remove the catalytic converter mount bracket to transfer case retaining bolt.

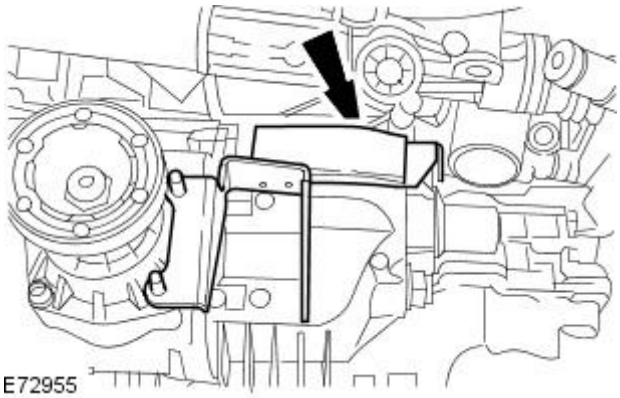

30. Remove the catalytic converter mount bracket retaining bolt.

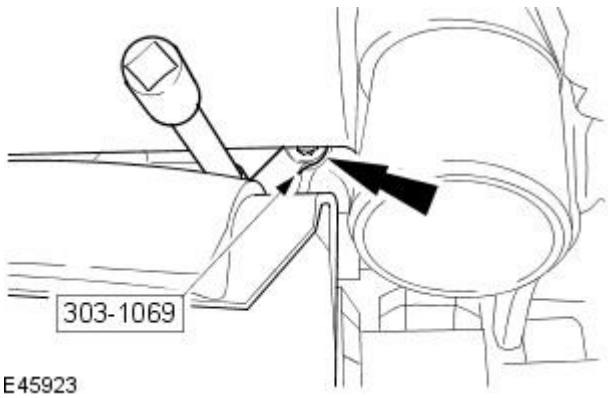

31. Using the special tool, loosen the catalytic converter mount bracket, top left-hand retaining bolt.

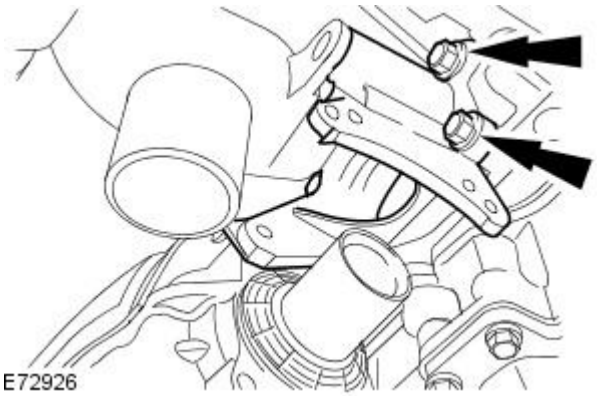

32. Remove the catalytic converter mount bracket.

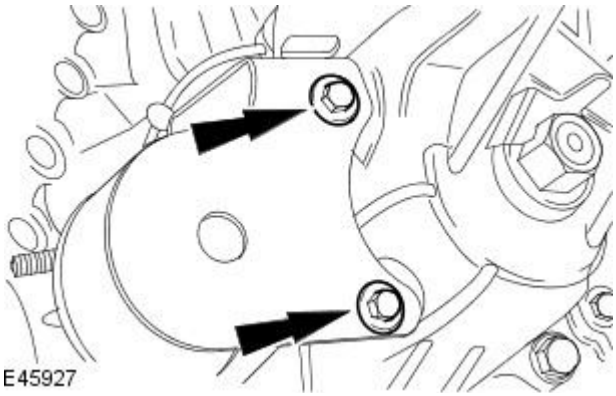

33. Remove the engine anti-roll restrictor bracket retaining bolts.

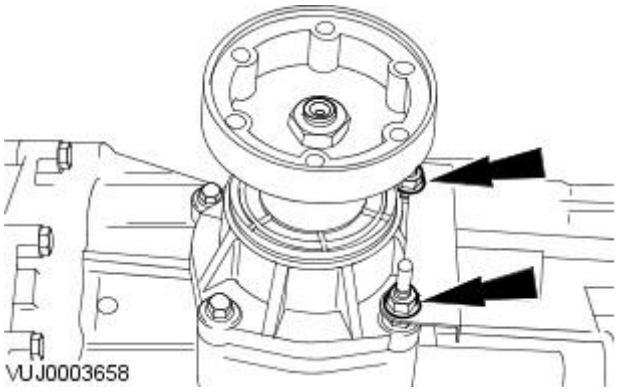

34. Remove the engine anti-roll restrictor bracket retaining nuts.

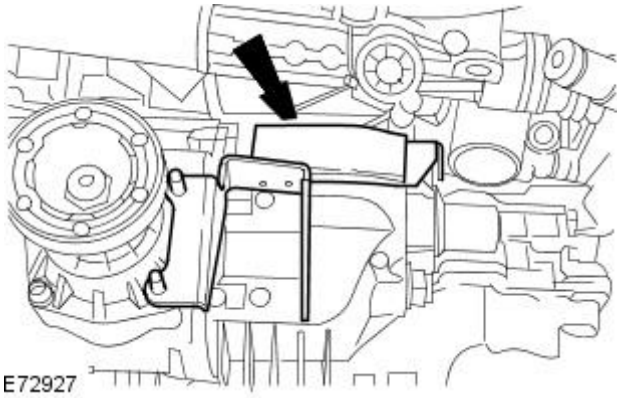

35. Remove the engine anti-roll restrictor bracket.

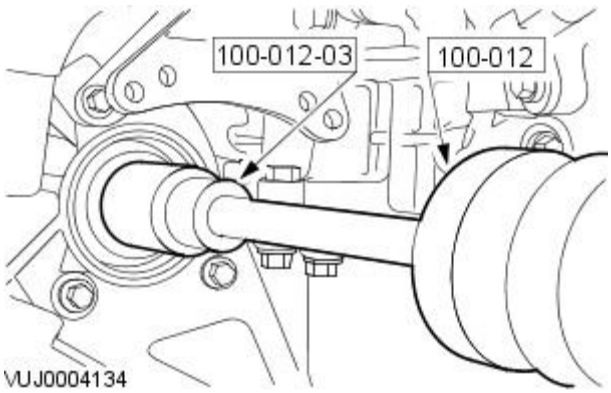

36. CAUTION: To prevent damage to the transfer box internal seal, make sure that the link shaft is not retracted further than 200 mm (7.87 inches) from the transfer case.

Using the special tools, detach the transfer case link shaft from the transfer case.

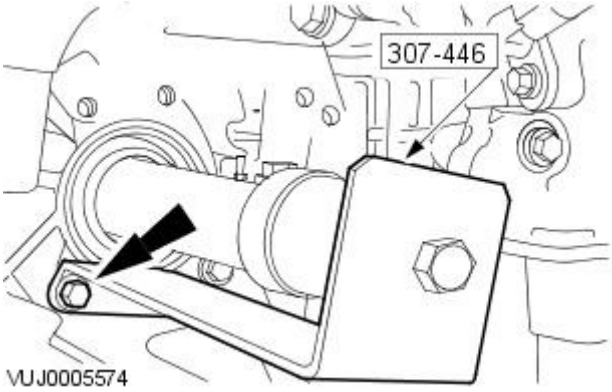

37. CAUTION: To prevent damage to the transfer box internal seal, make sure that the link shaft is not retracted further than 200 mm (7.87 inches) from the transfer case.

Using the special tool, retract the transfer case link shaft.

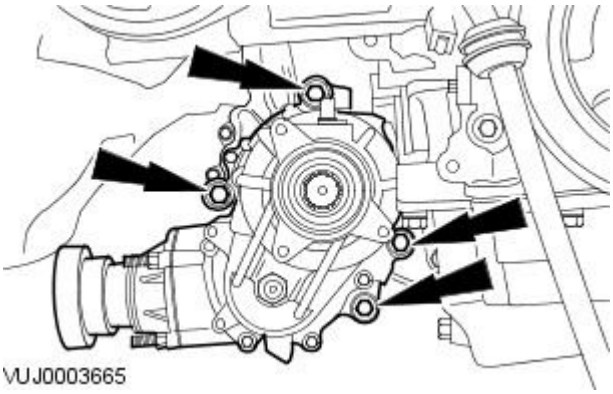

38. CAUTION: Make sure there is no loss of fluid from the transfer case. Failure to follow this instruction may result in damage to the transfer case.

With the aid of an assistant remove the transfer case.

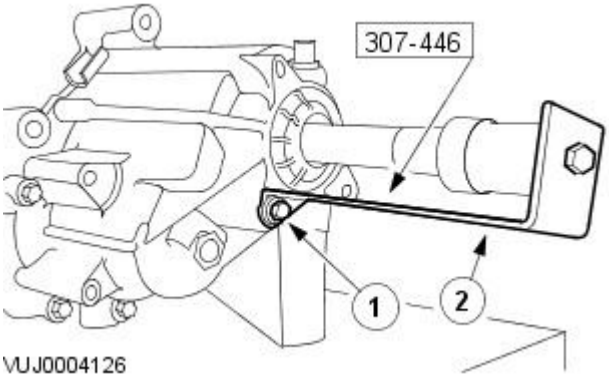

39. CAUTION: Make sure there is no loss of fluid from the transfer case. Failure to follow this instruction may result in damage to the transfer case.

Remove the special tool.

1. Remove the retaining bolt.
2. Remove the special tool.

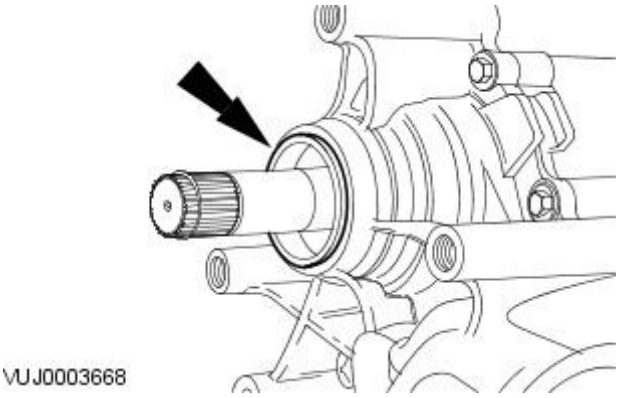

40. CAUTION: Make sure there is no loss of fluid from the transfer case. Failure to follow this instruction may result in damage to the transfer case.

Remove and discard O-ring seal.

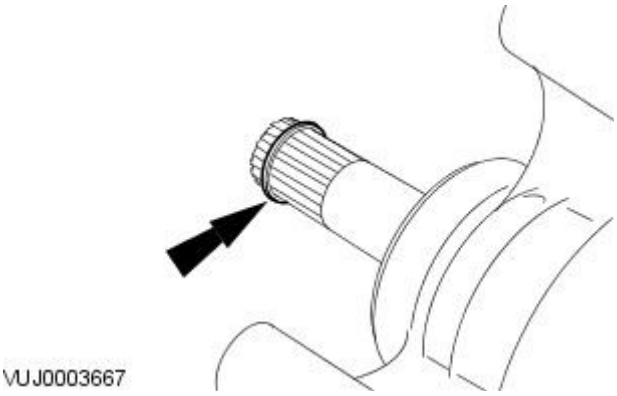

41. CAUTION: Make sure there is no loss of fluid from the transfer case. Failure to follow this instruction may result in damage to the transfer case.

Remove and discard the link shaft snap ring.

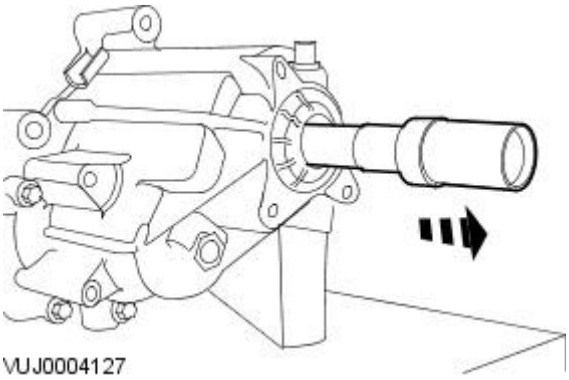

42. CAUTION: Make sure there is no loss of fluid from the transfer case. Failure to follow this instruction may result in damage to the transfer case.

Remove the link shaft from the transfer case.

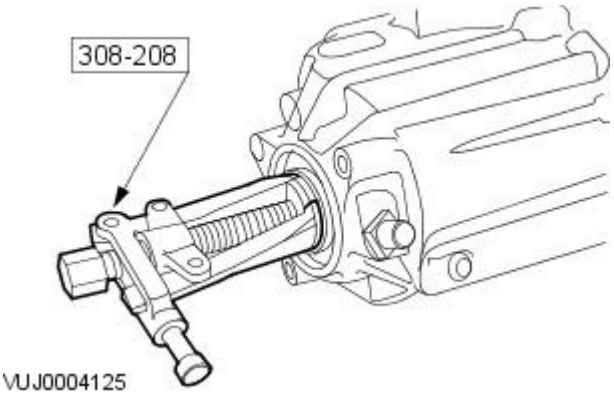

43. CAUTION: Make sure there is no loss of fluid from the transfer case. Failure to follow this instruction may result in damage to the transfer case.

Using the special tool, remove the link shaft seal.

Transfer Case - Transfer Case

Installation

Special Tool(s)	
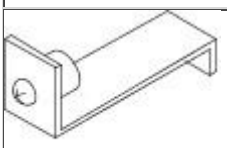 307-446	Link shaft limiter bracket 307-446
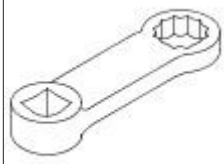 E46430	Torque adapter 303-1069
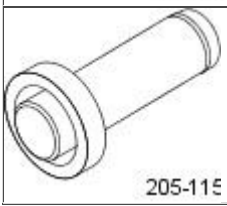 205-115	Link shaft oil seal installer 205-115

Installation

All vehicles

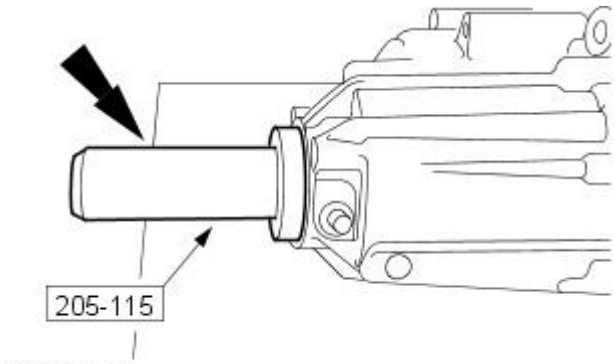

VUJ0004124

1. CAUTION: Make sure there is no loss of fluid from the transfer case. Failure to follow this instruction may result in damage to the transfer case.

• NOTE: Using a suitable solvent clean the seal face on the housing before fitting a new seal.

Using the special tool, install the link shaft oil seal.

- If any transfer case fluid is lost during installation carry out drain and refill.
  For additional information, refer to: Transfer Case Draining and Filling (308-07 Transfer Case, General Procedures).

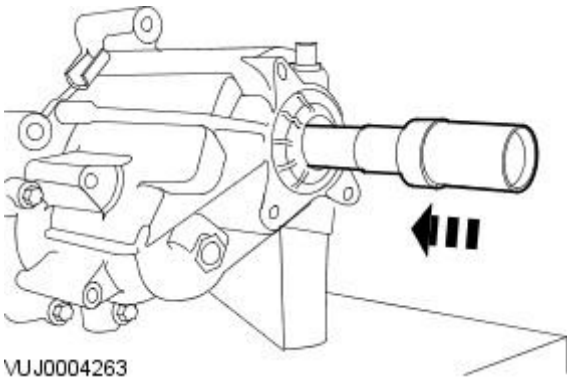

VUJ0004263

2. CAUTION: Make sure there is no loss of fluid from the transfer case. Failure to follow this instruction may result in damage to the transfer case.

Install the link shaft into the transfer case.

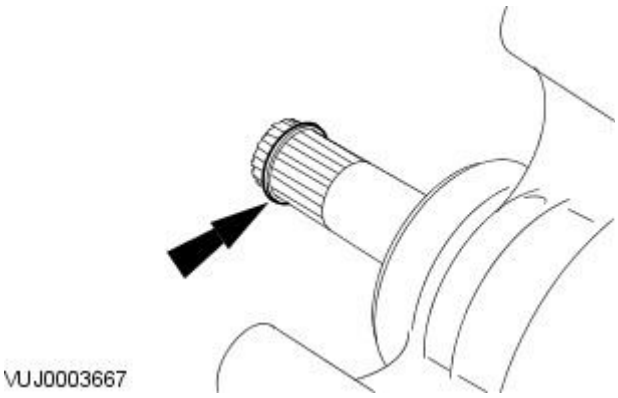

VUJ0003667

3. CAUTION: Make sure there is no loss of fluid from the transfer case. Failure to follow this instruction may result in damage to the transfer case.

Install a new link shaft snap ring.

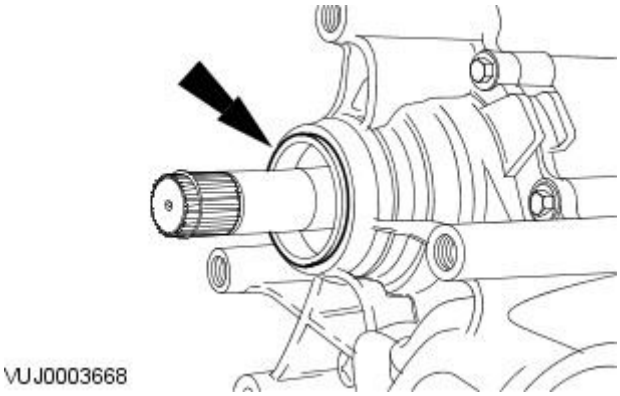

4. CAUTION: Make sure there is no loss of fluid from the transfer case. Failure to follow this instruction may result in damage to the transfer case.

Install a new O-ring seal.

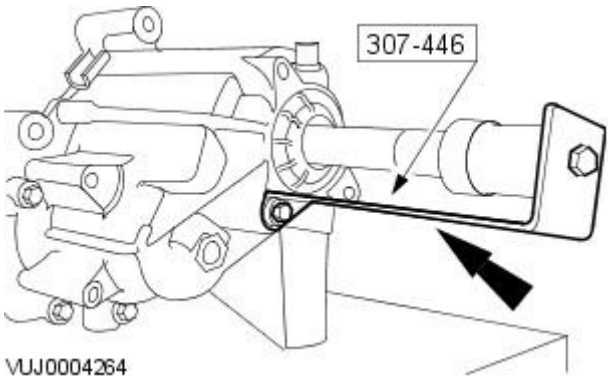

5. CAUTION: Make sure there is no loss of fluid from the transfer case. Failure to follow this instruction may result in damage to the transfer case.

Install the special tool.

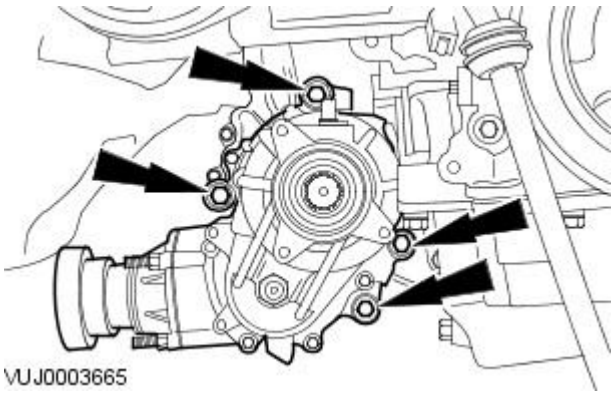

6. CAUTION: Make sure there is no loss of fluid from the transfer case. Failure to follow this instruction may result in damage to the transfer case.

With the aid of an assistant install the transfer case.

- Tighten to 80 Nm.
- If any transfer case fluid is lost during installation carry out drain and refill.
  For additional information, refer to: Transfer Case Draining and Filling (308-07 Transfer Case, General Procedures).

• NOTE: On vehicles prior to VIN J25640, if you are re-using transfer case fixings, tighten to 90 Nm.

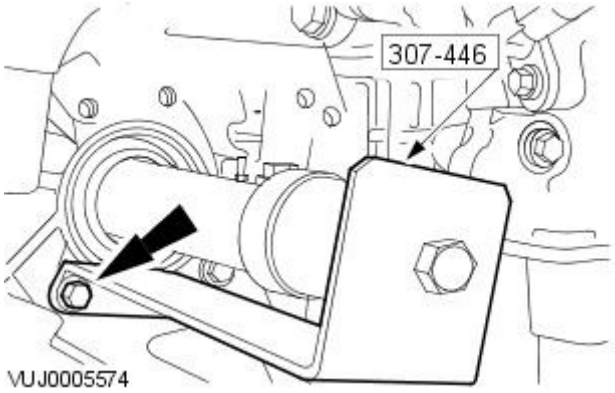

7. Remove the special tool.

- Engage the link shaft into the transfer case.

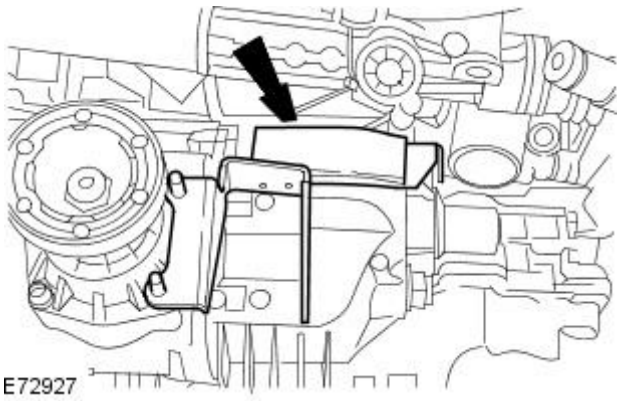

8. NOTE: Do not tighten the engine anti-roll restrictor bracket top retaining bolt at this stage.

Install the engine anti-roll restrictor bracket.

- Install the engine anti-roll restrictor bracket top retaining bolt.

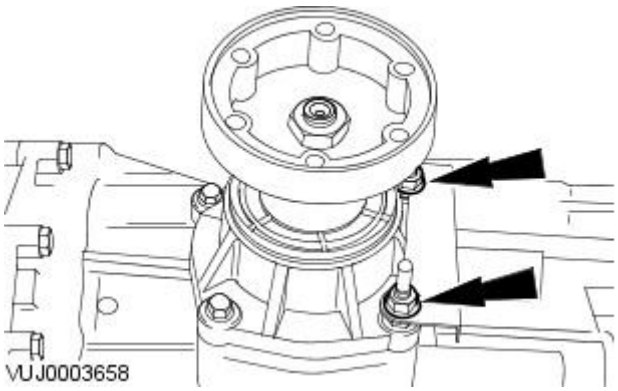

9. NOTE: Do not tighten the engine anti-roll restrictor bracket retaining nuts at this stage.

Install the engine anti-roll restrictor bracket retaining nuts.

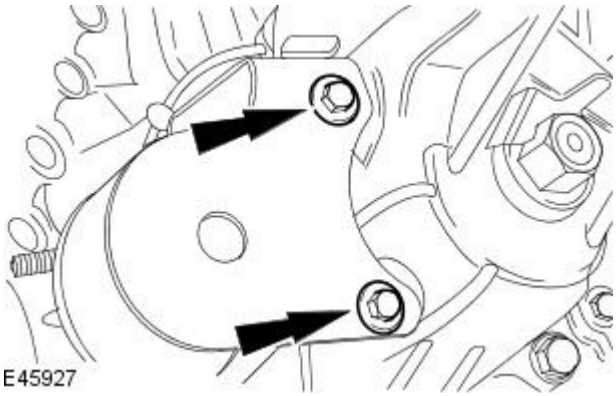

10. NOTE: Do not tighten the engine anti-roll restrictor bracket retaining bolts at this stage.

Install the engine anti-roll restrictor bracket side retaining bolts.

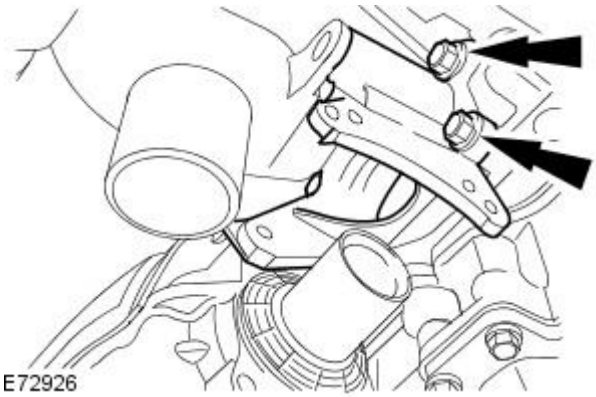

11. NOTE: Do not tighten the catalytic converter mount bracket retaining bolts at this stage.

Install the catalytic converter mount bracket.

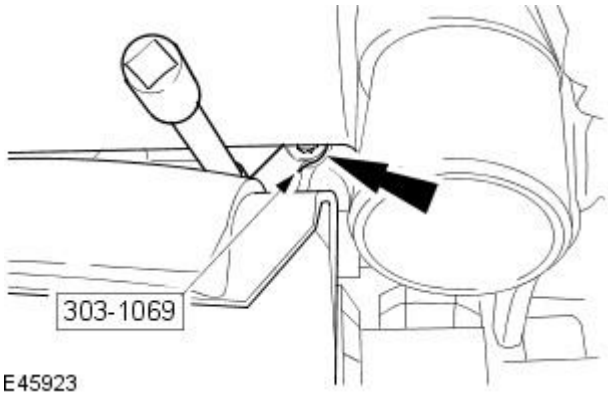

12. Using the special tool, tighten the catalytic converter mount bracket, top left-hand retaining bolt.

- Use the calculation in step 13 to produce the correct torque to apply to the retaining bolt.

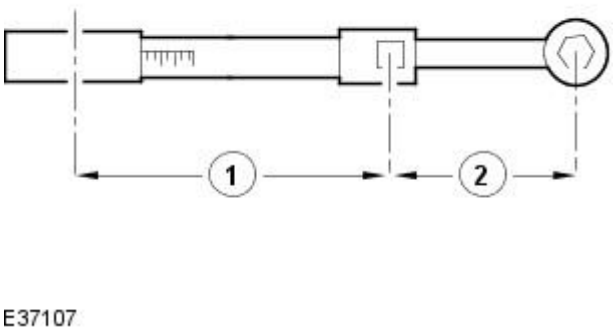

13. Using the special tool and a torque wrench, tighten the catalytic converter mount bracket, top left-hand retaining bolt.

- To make sure the catalytic converter mount bracket, top left-hand retaining bolt is torqued to the correct specification the following calculation steps must be used.
  1. Step 1. Multiply 55 Nm by the effective length of the torque wrench (1).
  2. Step 2. Add the effective length of the special tool (2) to the effective length of the torque wrench (1).
  3. Step 3. Divide the total of step 1 by the total of step 2.
  4. Step 4. Set the torque wrench to the figure arrived at in step 3.
- Tighten the catalytic converter mount bracket, top left-hand retaining bolt to the torque given by the calculation.

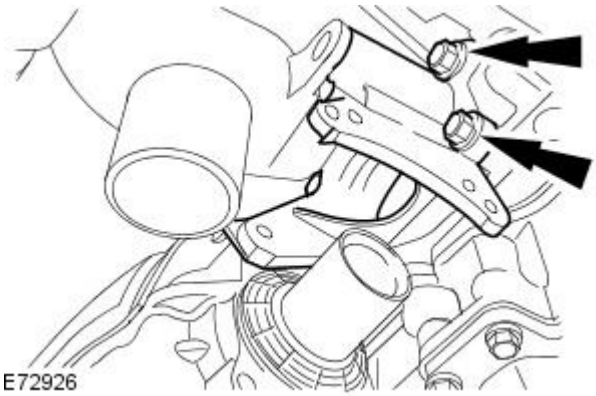

14. Tighten the catalytic converter mount bracket retaining bolts.

- Tighten to 55 Nm.

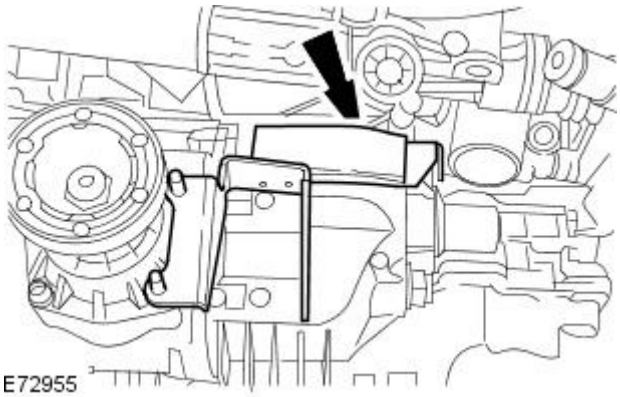

15. Tighten the catalytic converter mount bracket retaining bolt.

- Tighten to 55 Nm.

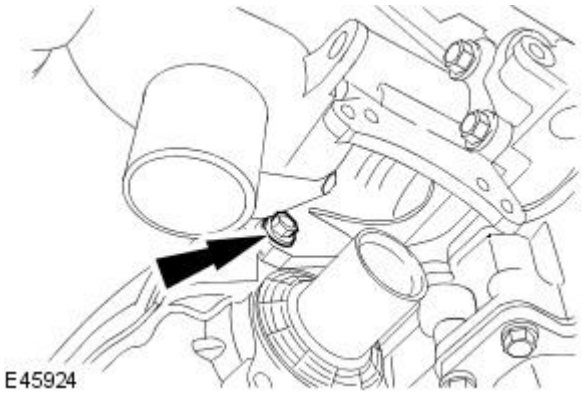

16. Install the catalytic converter mount bracket to transfer case retaining bolt.

- Tighten to 25 Nm.

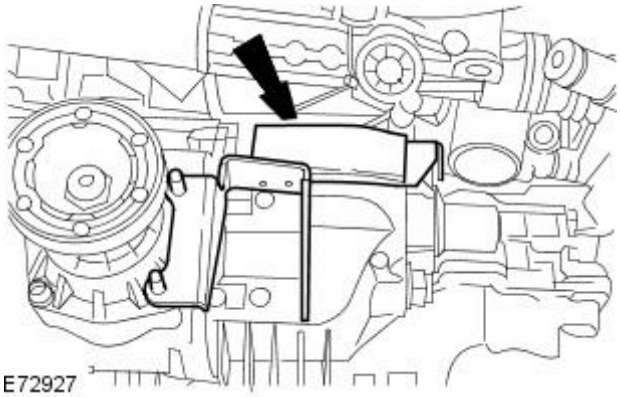

17. Tighten the engine anti-roll restrictor bracket top retaining bolt.

- Tighten to 55 Nm.

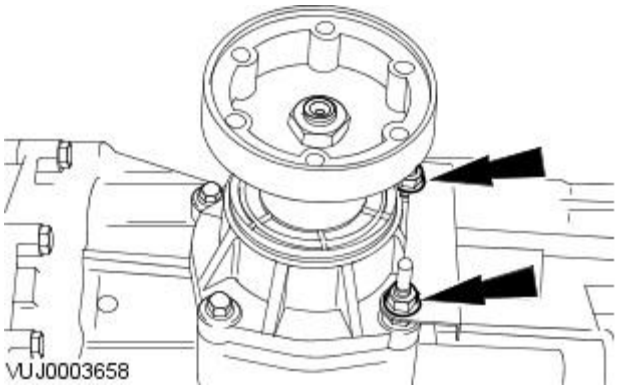

18. Tighten the engine anti-roll restrictor bracket retaining nuts.

- Tighten to 35 Nm.

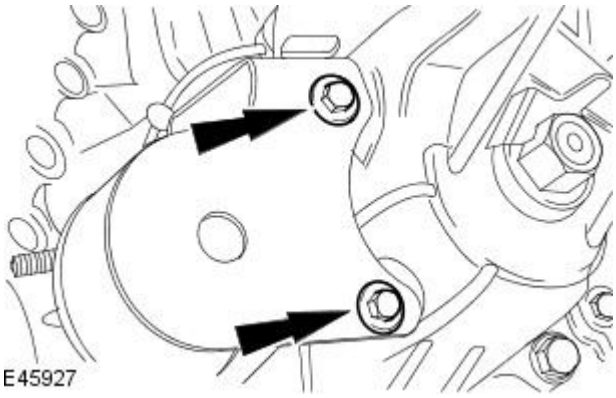

19. Tighten the engine anti-roll restrictor bracket side retaining bolts.

- Tighten to 35 Nm.

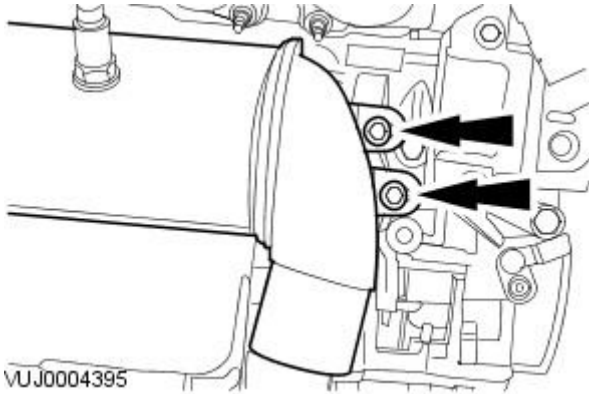

20. Install the catalytic converter to catalytic converter mount bracket retaining bolts.

- Tighten to 25 Nm.

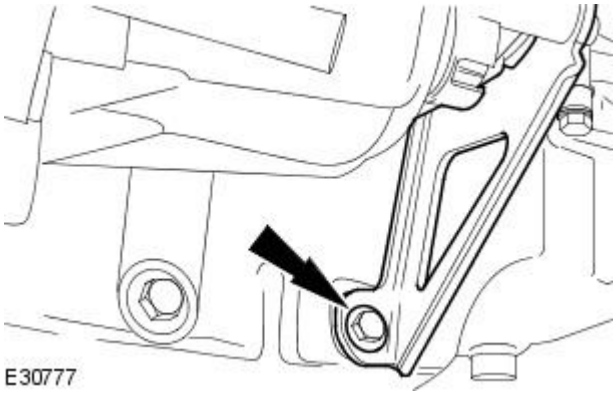

21. NOTE: Alternator cooling duct shown removed for clarity.

Install transfer case support bracket.

- Tighten to 47 Nm.

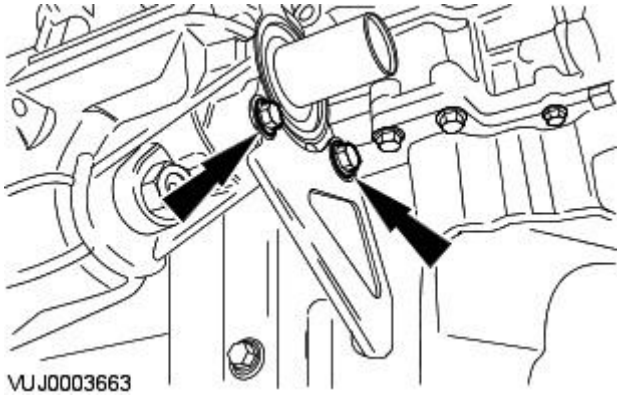

22. Install transfer case support bracket top retaining bolts.

- Tighten to 25 Nm.

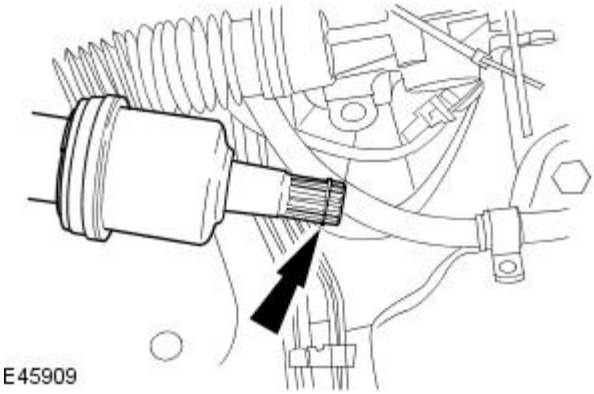

23. Install a new snap ring to the halfshaft.

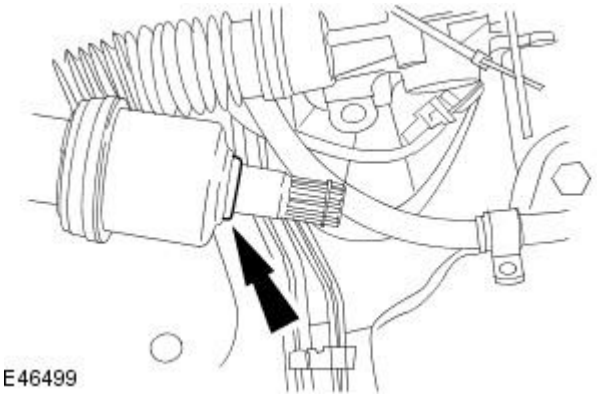

24. Install a new halfshaft seal.

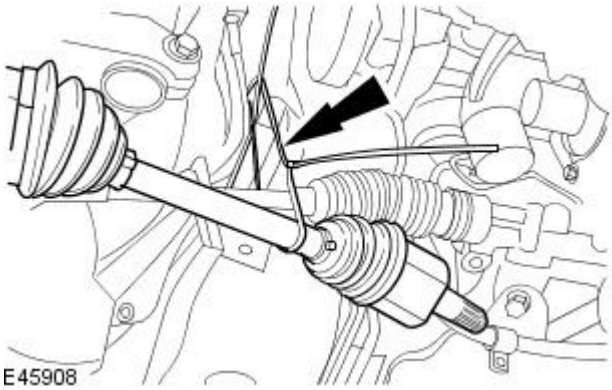

25. CAUTION: Make sure the halfshaft constant velocity (CV) joints do not over articulate. Failure to follow this instruction may result in damage to the CV joints.

Remove the halfshaft support strap.

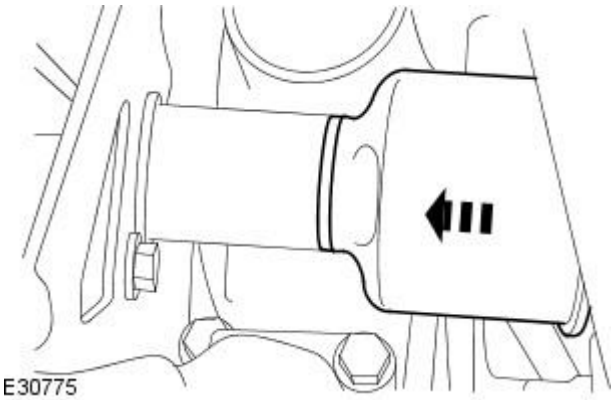

26. CAUTION: Make sure the CV joint splines are located fully. Do not use excessive force when engaging the CV joint into the link shaft.

Install the halfshaft.

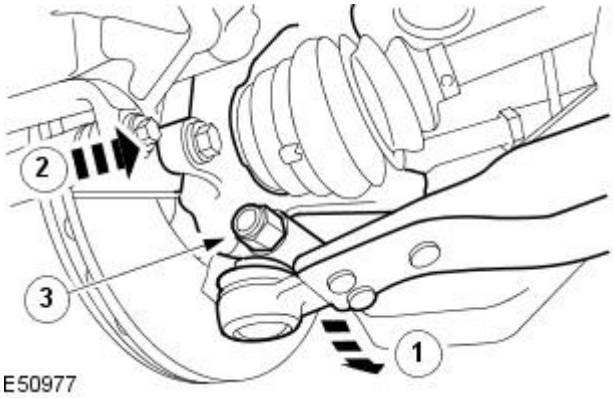

27. NOTE: Install a new retaining nut.

Attach the wheel knuckle.

1. Reposition the lower arm.
2. Attach the wheel knuckle.
3. Install the lower arm ball joint retaining nut and bolt.

- Tighten to 83 Nm.

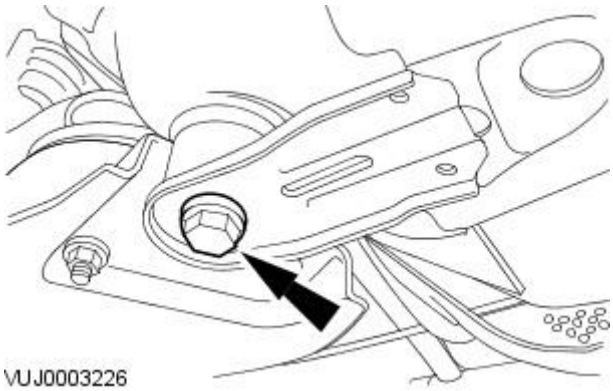

28. Loosley install the right-hand front subframe rear mount retaining bolt.

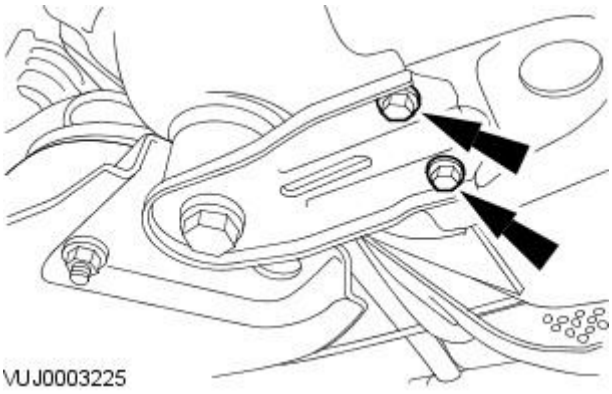

29. NOTE: Left-hand shown, right-hand similar.

Loosely install the front subframe reinforcement plate retaining bolts.

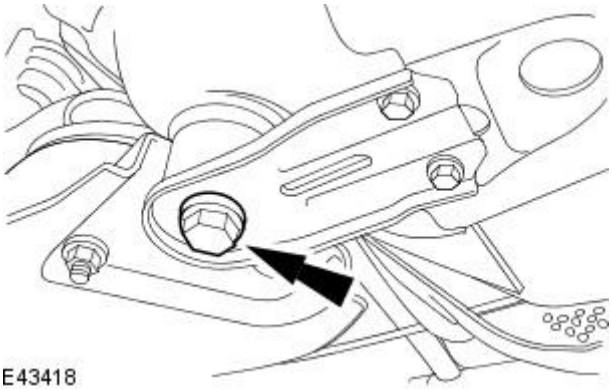

30. NOTE: Left-hand shown, right-hand similar.

Tighten to 142 Nm.

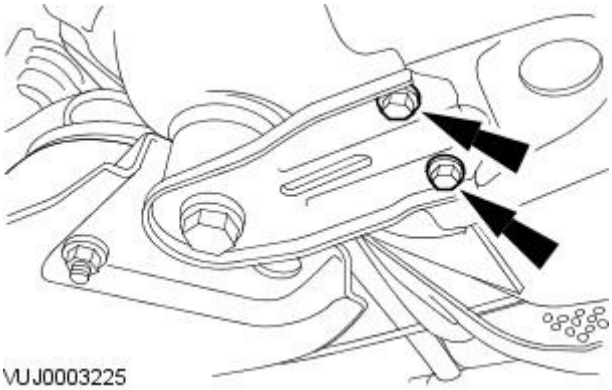

31. NOTE: Left-hand shown, right-hand similar.

Tighten the front subframe reinforcement bolts.

- M8 to 35 Nm.
- M10 to 70 Nm.

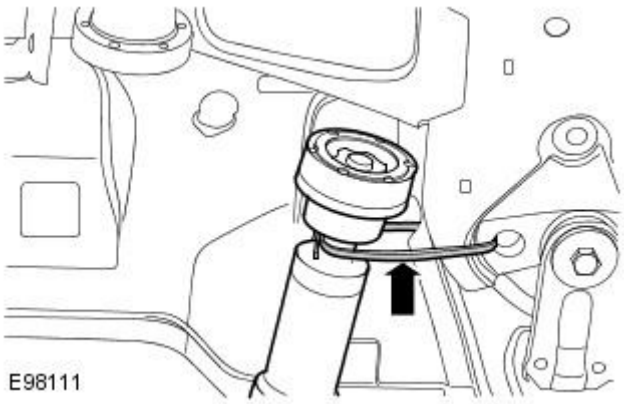

32. CAUTION: Make sure that the driveshaft does not hang on the center universal joint. Failure to follow this instruction may result in damage to the driveshaft.

Cut and remove the tie straps securing the outer casing of the driveshaft universal joint.

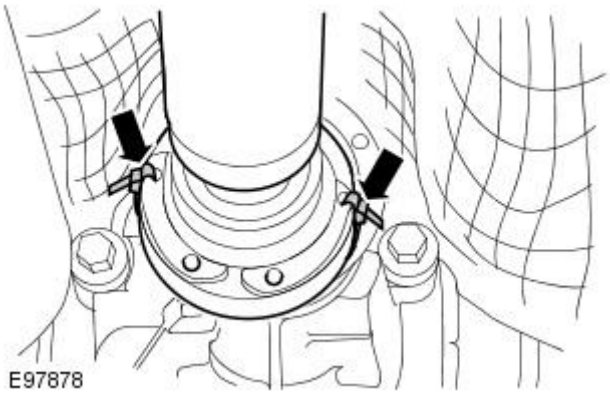

33. Cut and remove the tie straps securing the outer casing of the driveshaft universal joint.

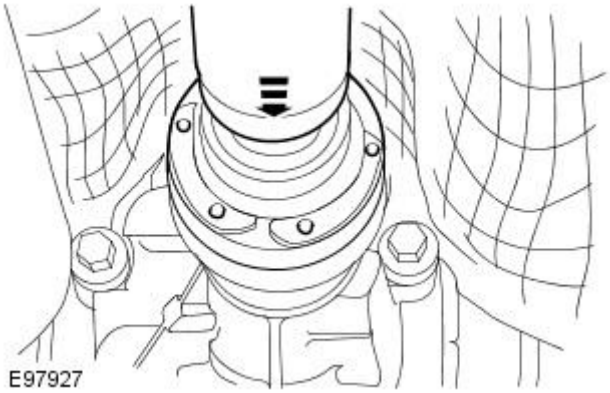

34. Connect the driveshaft to the transfer case.

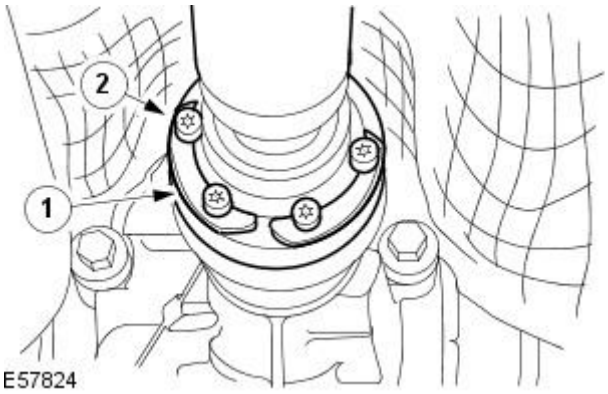

35. Attach the driveshaft universal joint.

1. Attach the driveshaft universal joint.
2. Install new driveshaft retaining bolts

- Tighten to 44 Nm.

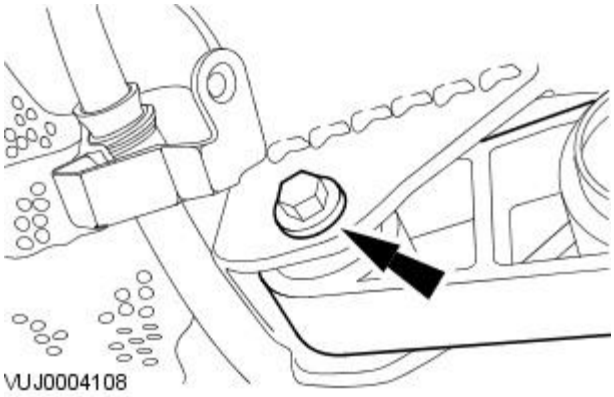

36. Install the engine roll restrictor.

- Install the engine roll restrictor retaining bolt.

37. Attach the engine roll restrictor.

- Tighten to 80 Nm

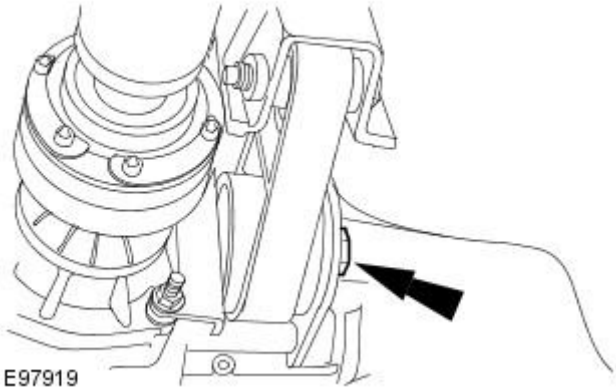

38. Tighten to 80 Nm.

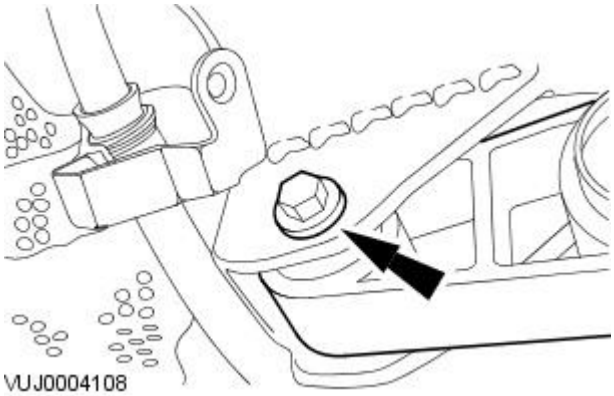

Vehicles with manual transmission

39. Fill the manual transmission to the correct oil level. For additional information, refer to: (308-03 Manual Transmission/Transaxle)

Transaxle Draining and Filling - Vehicles With: 5-Speed Manual Transmission - MT75 (General Procedures),
Transaxle Draining and Filling - Vehicles With: 5-Speed Manual Transmission - MT75 (General Procedures).

Vehicles with automatic transmission

40. Connect the selector lever cable.

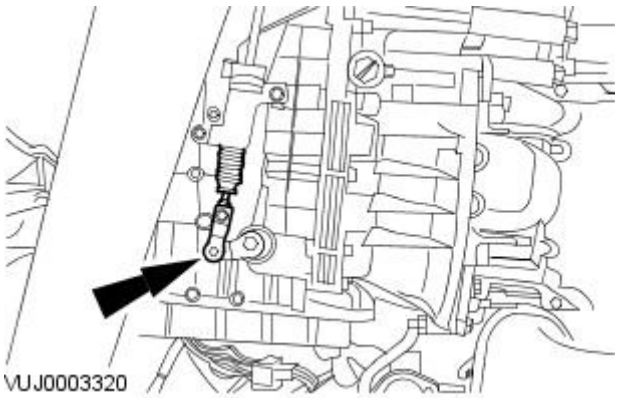

41. Attach the selector lever cable bracket.

- Tighten to 10 Nm.

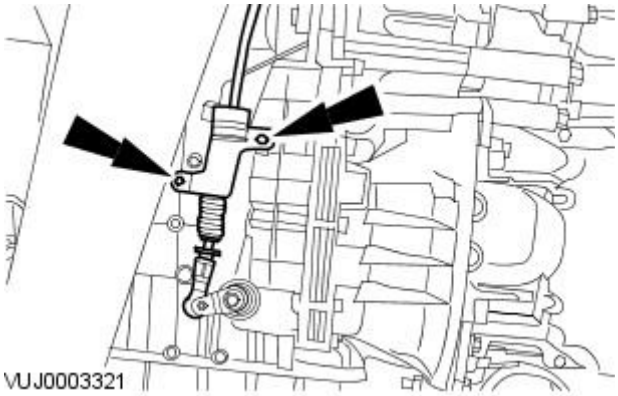

42. Fill the automatic transmission to the correct oil level.
For additional information, refer to: Transmission Fluid Drain and Refill (307-01A Automatic Transmission/Transaxle - Vehicles With: 5-Speed

Automatic Transaxle - JATCO, General Procedures).

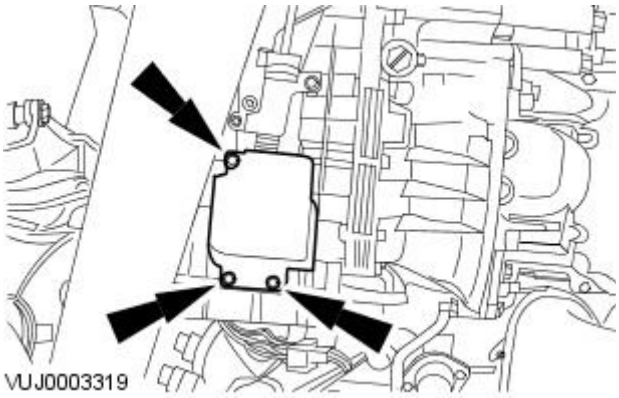

43. Install the selector lever cable shield.

- Tighten to 10 Nm.

All vehicles

44. Install the muffler inlet pipe.
For additional information, refer to: Muffler Inlet Pipe - 2.0L NA V6 - AJV6/2.5L NA V6 - AJV6/3.0L NA V6 - AJ27 (309-00 Exhaust System, Removal and Installation).

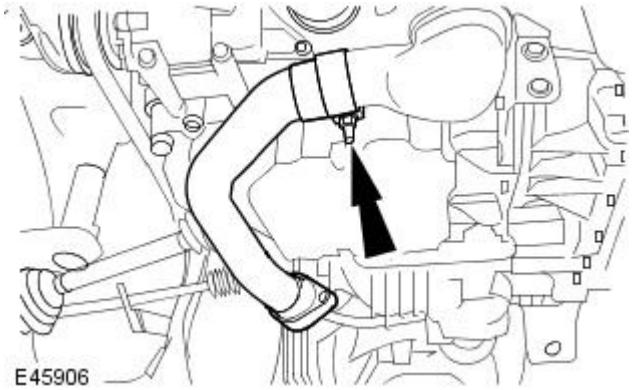

45. Install the front pipe.

- Tighten to 55 Nm.

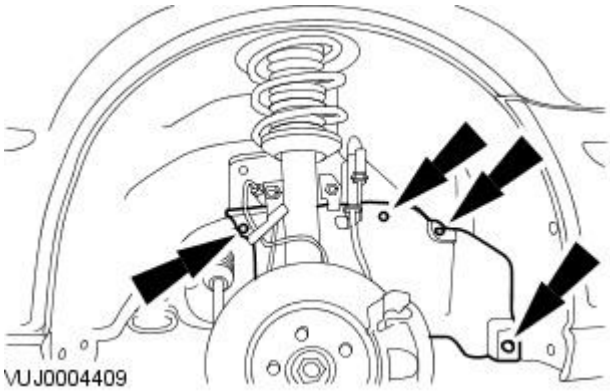

46. Install the fender splash shield access panel.

47. Install the right-hand front wheel and tire.
For additional information, refer to: Wheel and Tire (204-04 Wheels and Tires, Removal and Installation).

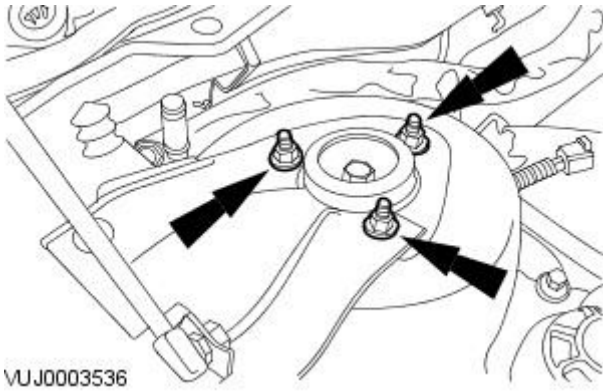

48. Tighten the shock absorber and spring assembly securing nuts.

- Tighten to 25 Nm.

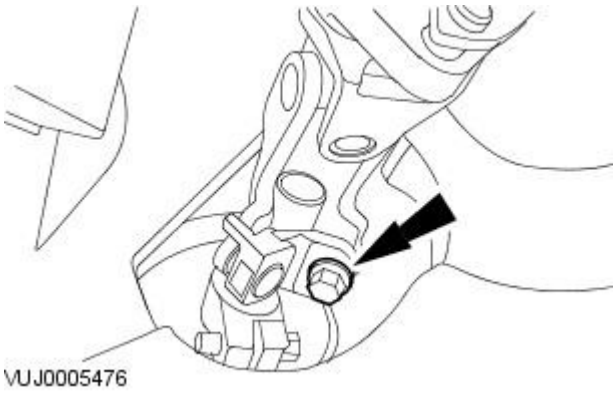

49. NOTE: Install a new steering column lower retaining bolt.

Attach the steering column.

Exhaust System -

Torque Specifications

Description	Nm	lb-ft	lb-in
Catalytic converter retaining studs - vehicles without diesel engines	9	-	80
Catalytic converter to exhaust manifold retaining nuts - vehicles without diesel engines	A	-	-
Catalytic converter - right-hand - to transfer case mounting bracket retaining bolts - vehicles without diesel engines	25	18	-
Catalytic converter - left-hand - to support bracket retaining bolts - vehicles without diesel engines	25	18	-
Muffler and tailpipe clamp retaining nut - all vehicles	48	35	-
Front muffler to muffler inlet pipe retaining nuts - vehicles without diesel engines	48	35	-
Muffler inlet pipe to front pipe retaining nut and bolt - vehicles without diesel engines	48	35	-
Exhaust hanger to front muffler retaining bolt - all vehicles	25	18	-
Heated oxygen sensor (HO2S) - vehicles without diesel engines	40	30	-
Catalyst monitor sensor - vehicles without diesel engines	40	30	-
Exhaust hanger to body retaining bolts - all vehicles	25	18	
Exhaust heat shield retaining bolts - vehicles without diesel engines	10	-	89
Catalytic converter heat shield retaining bolts - vehicles without diesel engines	10	-	89
Air cleaner bracket retaining nuts - vehicles without diesel engines	6	-	53
Catalytic converter to turbocharger retaining nuts - vehicles with diesel engines	48	35	-
Catalytic converter retaining bolts - vehicles with diesel engines	48	35	-
Turbocharger heat shield retaining nuts - vehicles with diesel engines	8	-	71
Turbocharger heat shield retaining bolts - vehicles with diesel engines	8	-	71
Exhaust flexible pipe to catalytic converter retaining nuts - vehicles with diesel engines	48	35	-
Front muffler to exhaust flexible pipe retaining nuts - vehicles with diesel engines	48	35	-
Exhaust flexible pipe to diesel particulate filter retaining nuts - vehicles with diesel engines	48	35	-
Diesel particulate filter to muffler inlet pipe retaining nuts - vehicles with diesel engines	48	35	-
Diesel particulate filter pressure sensor mounting bracket retaining nuts - vehicles with diesel engines	5	-	44
Catalytic converter temperature sensor - vehicles with diesel engines	35	26	-
Diesel particulate filter temperature sensor - vehicles with diesel engines	35	26	-

A = refer to the procedure for the correct torque sequence

Exhaust System - Exhaust System

Description and Operation

Vehicles with 2.0L petrol engine

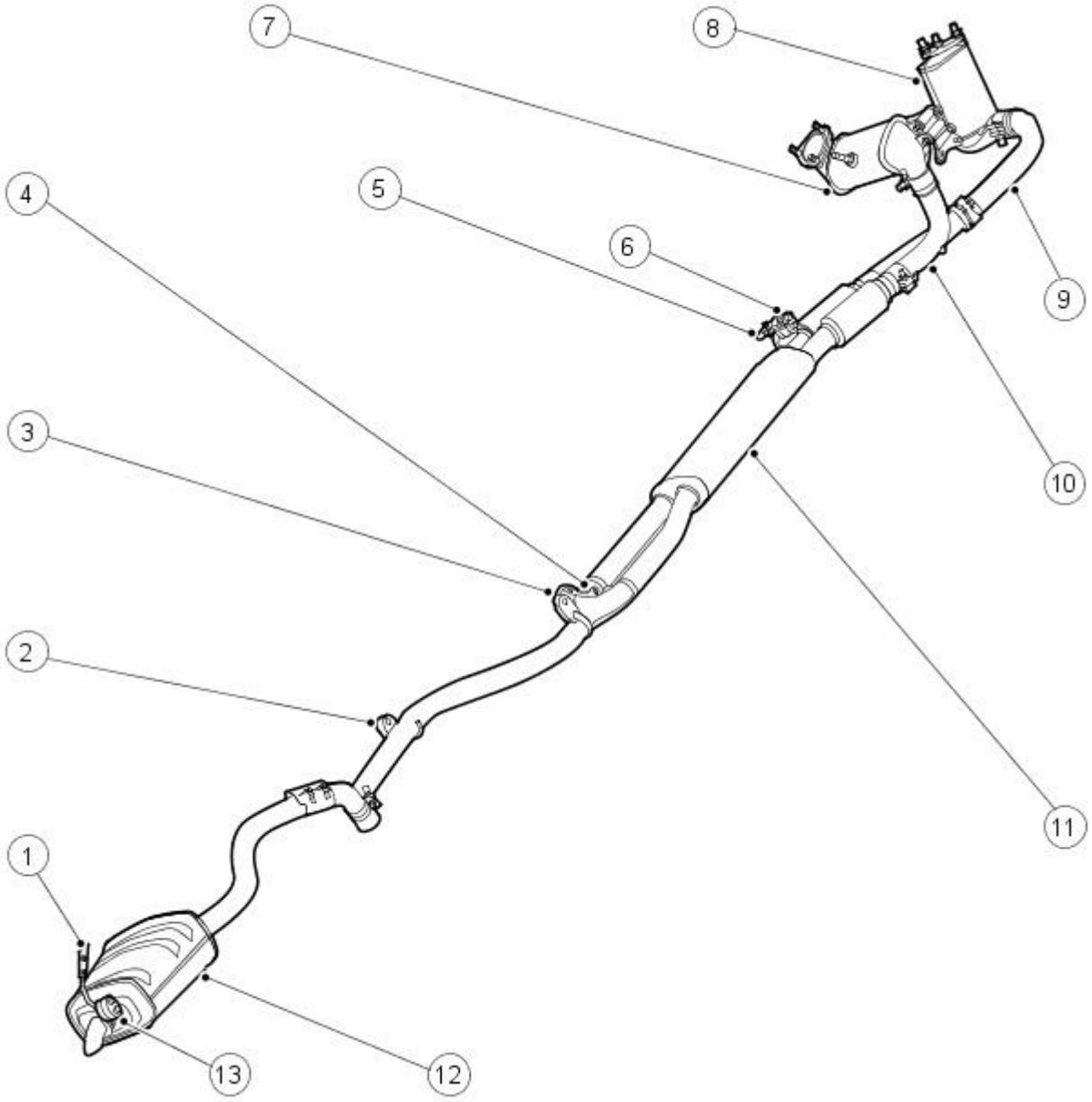

VUJ0005785

Item	Part Number	Description
1	-	Exhaust hanger
2	-	Exhaust hanger isolator
3	-	Exhaust hanger isolator
4	-	Exhaust hanger
5	-	Exhaust hanger
6	-	Exhaust hanger isolator
7	-	Catalytic converter - R/H
8	-	Catalytic converter - L/H
9	-	Front pipe
10	-	Muffler inlet pipe
11	-	Front muffler
12	-	Muffler and tailpipe
13	-	Exhaust hanger

Vehicles with 2.5L or 3.0L engine

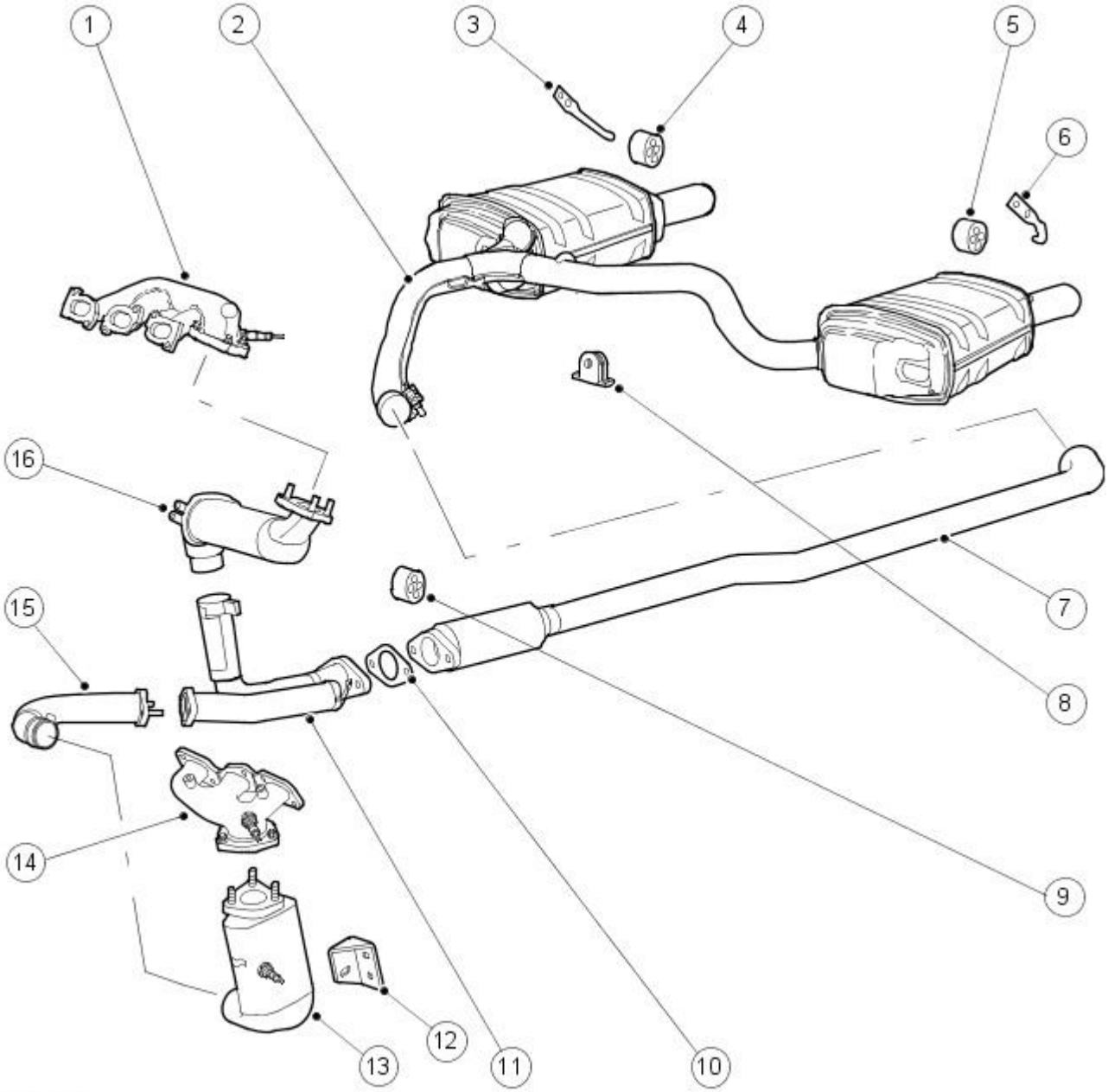

VUJ0003737

Item	Part Number	Description
1	—	Exhaust manifold - R/H
2	—	Muffler and tailpipe assembly
3	—	Exhaust hanger
4	—	Exhaust hanger isolator
5	—	Exhaust hanger isolator
6	—	Exhaust hanger
7	—	Front muffler
8	—	Exhaust hanger isolator
9	—	Exhaust hanger isolator
10	—	Front muffler to muffler inlet pipe gasket
11	—	Muffler inlet pipe
12	—	Catalytic converter - L/H, support bracket
13	—	Catalytic converter - L/H
14	—	Exhaust manifold - L/H
15	—	Front pipe
16	—	Catalytic converter - R/H

Vehicles with Diesel Engine

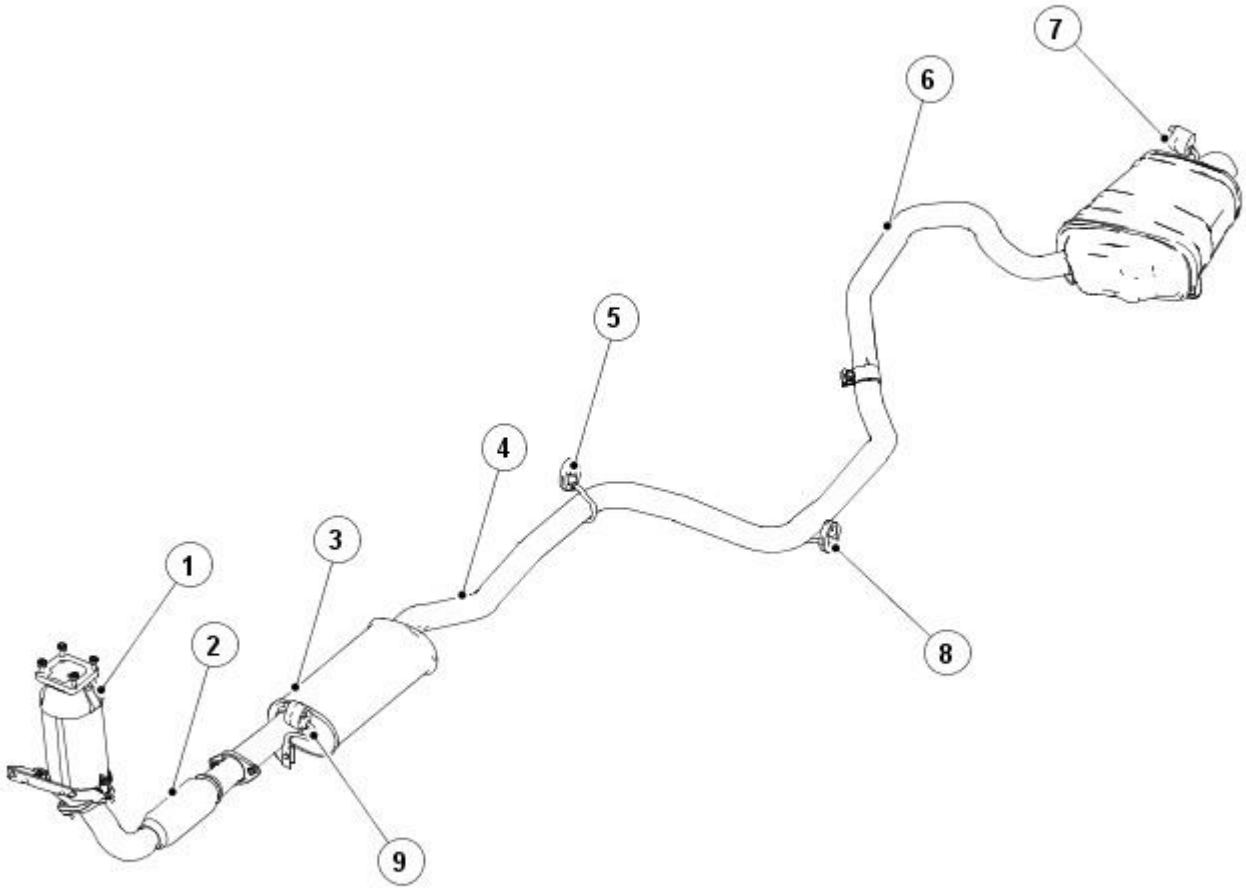

E43778

Item	Part Number	Description
1	—	Catalytic converter
2	—	Exhaust flexible pipe
3	—	Exhaust hanger isolator
4	—	Front muffler
5	—	Exhaust hanger isolator
6	—	Muffler and tailpipe
7	—	Exhaust hanger isolator
8	—	Exhaust hanger isolator
9	—	Exhaust hanger

Vehicles with Diesel Particulate Filter (DPF)

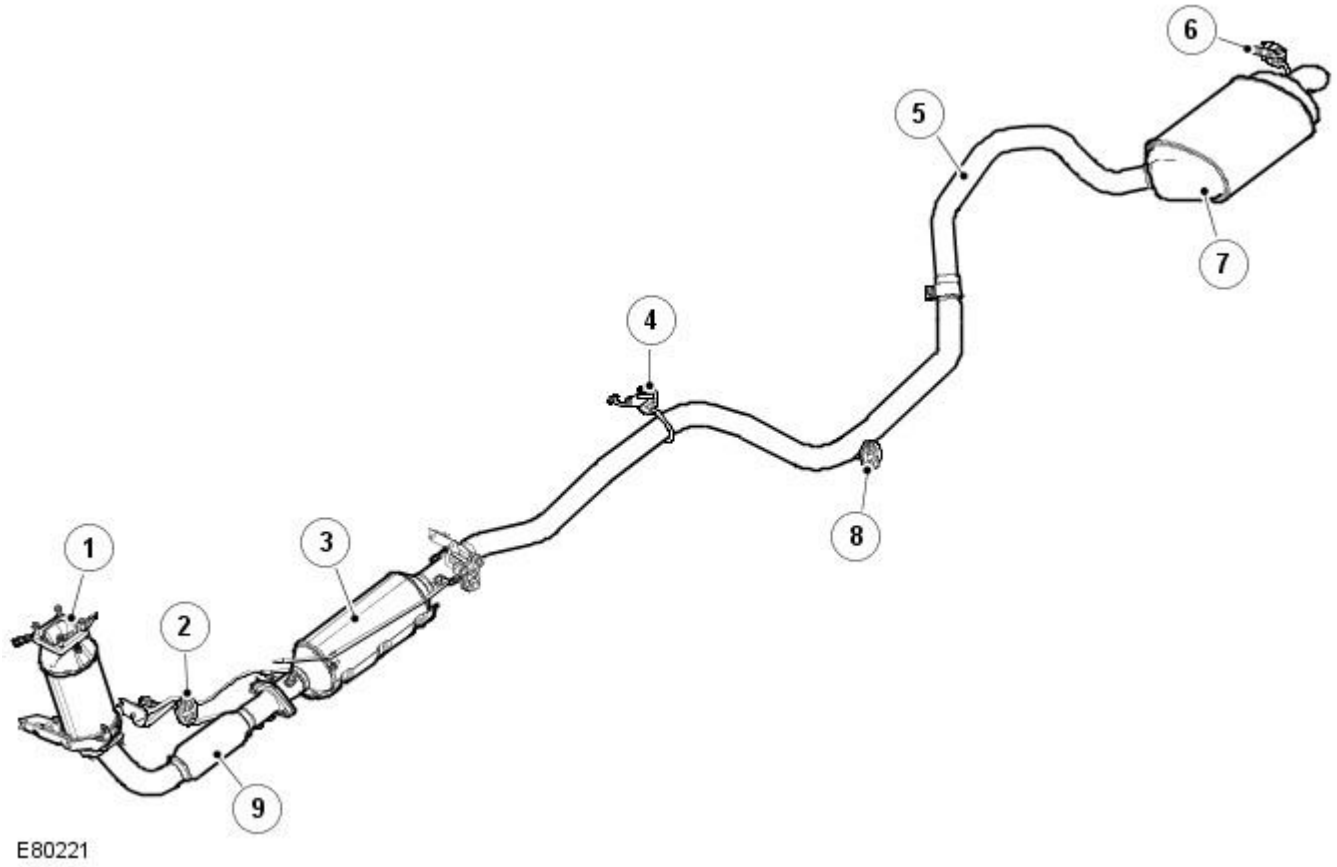

Item	Part Number	Description
1	—	Catalytic converter
2	—	Exhaust hanger
3	—	DPF
4	—	Exhaust hanger isolator
5	—	Rear pipe
6	—	Exhaust hanger isolator
7	—	Muffler
8	—	Exhaust hanger isolator
9	—	Exhaust flexible pipe

All petrol vehicles are fitted with a stainless steel exhaust system consisting of:

- catalytic converter(s)
- front pipe
- muffler inlet pipe
- front muffler assembly
- muffler and tailpipe assembly

The exhaust system is designed to meet the rising standards of vehicle emissions, complying with LEV (USA) and stage three (Europe) emission legislation; effective from January 2001.

The exhaust system is supported at the front by the two catalytic converters which are retained directly to the exhaust manifolds by studs and nuts. The remainder of the exhaust system is supported by four rubber hanger isolators. On 2.0L and diesel vehicles there are three attached to the front muffler assembly and one attached to the rear muffler. On 2.5L and 3.0L vehicles there is one attached to the front muffler and three attached to the rear muffler and tail pipe assembly.

A flexible coupling, which is part of the front muffler, is fitted to isolate the exhaust system from engine movement and vibration.

For 2.5L and 3.0L vehicles the rear exhaust muffler and tail pipe assembly is manufactured in one section which consists of a 'Y' pipe joined to the two rear muffler and tail pipes. A service fix is provided for replacement of the rear mufflers and tail pipes. For 2.0L and diesel vehicles there is a single rear muffler assembly which is attached to the left-hand side of the vehicle.

Three Way Catalytic Converters

The catalytic converters each contain two bricks coated with palladium/rhodium. These elements are utilized to control the emissions of hydrocarbons (HC), carbon monoxide (CO) and oxides of nitrogen (NOx) from the engine.

Oxidation Catalytic Converter

The catalytic converter contains a brick coated with platinum. This element is utilized to control the emissions of hydrocarbons (HC), carbon monoxide (CO) and particles of matter from the engine.

Diesel Particulate Filter

The Diesel Particulate Filter (DPF) system reduces diesel particulate emissions to negligible levels (0.005 g/km) to meet current local European City clear air requirements.

The particulate emissions are the black fumes emitted from the diesel engine under certain load conditions. The emissions are a complex mixture of solid and liquid components with the majority of the particulates being carbon micro-spheres on which hydrocarbons from the engine's fuel and lubricant condense.

The DPF filter system consists of the following components:

- DPF

- DPF control software incorporated into the engine control module (ECM)
- Differential pressure sensor

The DPF reduces the pollution generated by diesel vehicles by filtering soot particles out of the exhaust gases.

The DPF is located in the exhaust system, downstream of the catalytic converter. A major feature of the DPF is its ability for regeneration. Regeneration is the burning of particulates trapped by the filter to prevent obstruction to the free flow of exhaust gasses. The regeneration process takes place at calculated intervals and is not noticeable by the driver of the vehicle.

Regeneration is most important, since an overfilled filter can damage the engine through excessive exhaust back-pressure and can its self be damaged or destroyed. The material trapped in the filter is in the most part carbon particles with some absorbed hydrocarbons.

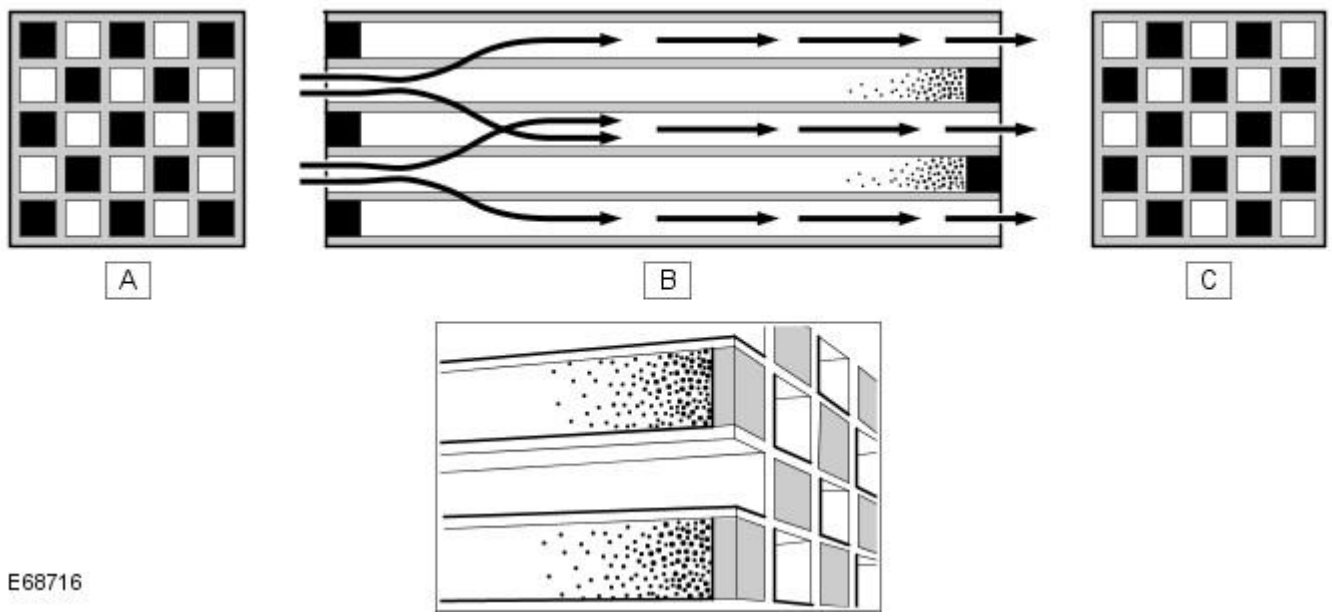

Item	Part Number	Description
A	-	Front face showing alternate closed cells
B	-	Side view showing exhaust gas flow through the filter and particulate build up
C	-	Rear face showing alternate closed cells

The DPF uses a filter technology based on a filter with a catalytic coating. The DPF is made from silicon carbide housed in a steel container and has excellent thermal shock resistance and thermal conductivity properties. The DPF is designed for the engine's operating requirements to maintain the optimum back-pressure requirements.

The porous surface of the filter consists of hundreds of small parallel channels positioned in the longitudinal direction of the exhaust system. Adjacent channels in the filter are alternately plugged at the end. This design forces the exhaust gasses to flow through the porous filter walls, which act as the filter medium. Particulate matter, which are too big to pass through the porous surface are collected and stored in the channels.

The collected particulate matter, if not removed, can create an obstruction to exhaust gas flow. The particles are removed by a regeneration process, which incinerates the particles.

Two processes are used to regenerate the DPF, passive and active.

Passive Regeneration

Passive regeneration requires no special engine management intervention and occurs during normal engine operation. The passive regeneration involves a slow conversion of the particulate matter deposited in the DPF into carbon dioxide. This process is active when the DPF temperature reaches 250°C (482°F) and is a continuous process when the vehicle is being driven at higher engine loads and speeds.

During passive regeneration, only a portion of the particulate matter is converted into carbon dioxide. This is due to the chemical reaction process, which is only effective within the normal operating temperature range of 250°C to 500°C (482°F to 932°F).

Above this temperature range the conversion efficiency of the particulates into carbon dioxide increases as the DPF temperature is raised. These temperatures can only be achieved using the active regeneration process.

Active Regeneration

Active regeneration starts when the particulate loading of the DPF reaches a threshold as monitored or determined by the DPF control software. The threshold calculation is based on driving style, distance traveled and back-pressure signals from the differential pressure sensor.

Active regeneration generally occurs every 370 to 1250 miles (600 to 2000km) although this is dependant on how the vehicle is driven. For example, if the vehicle is driven at low loads in urban traffic regularly, active regeneration will occur more often. This is due to the rapid build-up of particulates in the DPF than if the vehicle is driven at high speeds when passive regeneration will have occurred.

The DPF software incorporates an additional trigger, which is used as backup for active regeneration. If active regeneration has not been initiated by a back-pressure signal from the differential pressure sensor, regeneration is requested based on estimated cumulative particulate emissions since the last active regeneration event.

Active regeneration of the DPF is commenced when the temperature of the DPF is increased to the combustion temperature of the particles. The DPF temperature is raised by increasing the exhaust gas temperature. This is achieved by:

- Retarding the main injection timing
- Reducing intake boost pressure levels
- Activation of the inlet throttle
- Introducing post-injection of fuel after the pilot and main fuel injections have occurred.

Control of the post-injection is determined by the DPF software monitoring the signals from the two DPF temperature sensors to establish the temperature of the DPF. Depending on the DPF temperature, the DPF software requests the ECM to perform either 1 or 2 post-injections of fuel:

- The first post-injection of fuel burns inside the cylinder, which increases the temperature of the exhaust gas
- The second post-injection of fuel is injected late in the power stroke cycle. The fuel partly combusts in the cylinder, but some un-burnt fuel also passes into the exhaust where it creates an exothermic event within the catalytic converter, further increasing the temperature of the DPF

The active regeneration process takes approximately 20 minutes to complete. The first phase increases the DPF temperature to 200°C (392°F). The second phase further increases the DPF temperature to 600°C (1112°F), which is the optimum temperature for particle combustion. This temperature is then maintained for 15-20 minutes to ensure complete incineration of the particles within the DPF. The incineration process converts the carbon particles to carbon dioxide and water.

The active regeneration temperature of the DPF is closely monitored by the DPF software to maintain a target temperature of 600°C (1112°F) at the DPF inlet. The temperature control ensures that the temperatures do not exceed the operational limits of the turbocharger and the catalytic converter. The turbocharger inlet temperature must not exceed 760°C (1400°F) and the catalytic converter brick temperature must not exceed 800°C (1472°F) and the exit temperature must remain below 750°C (1382°F).

During the active regeneration process the following ECM controlled events occur:

- The turbocharger is maintained in the fully open position. This minimizes heat transmission from the exhaust gas to the turbocharger and reduces the rate of exhaust gas flow allowing optimum heating of the DPF. If the driver demands an increase in engine torque, the turbocharger will respond by closing the vanes as necessary
- The throttle is closed as this assists in increasing the exhaust gas temperature and reduces the rate of exhaust gas flow which has the effect of reducing the time for the DPF to reach the optimum temperature
- The exhaust gas re-circulation (EGR) valve is closed. The use of EGR decreases the exhaust gas temperature and therefore prevents the optimum DPF temperature being achieved
- The glow plugs are occasionally activated to provide additional heat to assist in raising the DPF temperature

If, due to vehicle usage and/or driving style, the active regeneration process cannot take place or is unable to regenerate the DPF, the dealer can force regenerate the DPF. This is achieved by either driving the vehicle until the engine is at its normal operating temperature and then driving for a further 20 minutes at speeds of not less than 30 mph (48 km/h) or by connecting the Jaguar approved diagnostic system to the vehicle, which will perform an automated static regeneration procedure to clean the DPF.

Diesel Particulate Filter Control

The DPF requires constant monitoring to ensure that it is operating at its optimum efficiency and does not become blocked. The ECM contains DPF software, which controls the monitoring and operation of the DPF system and also monitors other vehicle data to determine regeneration periods and service intervals.

The DPF software can be divided into 3 separate control software modules; a DPF supervisor module, a DPF fuel management module and a DPF air management module.

These 3 modules are controlled by a fourth software module known as the DPF co-ordinator module. The co-ordinator module manages the operation of the other modules when an active regeneration is requested. The DPF supervisor module is a sub-system of the DPF co-ordinator module.

DPF Fuel Management Module

The DPF fuel management module controls the following functions:

- Timing and quantity of the 4 split injections per stroke (pilot, main and 2 post injections)
- Injection pressure and the transition between the 3 different calibration levels of injection

The above functions are dependant on the condition of the catalytic converter and the DPF.

The controlled injection determines the required injection level in addition to measuring the activity of the catalytic converter and the DPF. The fuel management calculates the quantity and timing for the 4-split injections, for each of the 3 calibration levels for injection pressure, and also manages the transition between the levels.

The 2 post injections are required to separate the functionality of increasing in-cylinder gas temperatures and the production of hydrocarbons. The first post injection is used to generate the higher in-cylinder gas temperature while simultaneously retaining the same engine torque output produced during normal (non-regeneration) engine operation. The second post injection is used to generate hydrocarbons by allowing un-burnt fuel into the catalytic converter without producing increased engine torque.

DPF Air Management Module

The DPF air management module controls the following functions:

- EGR control
- Turbocharger boost pressure control
- Exhaust Air Fuel Ratio (AFR) control

During active regeneration, the EGR operation is disabled and the closed-loop activation of the turbocharger boost controller is calculated. The air management module controls the air in the intake manifold to a predetermined level of pressure. This control is required to achieve the correct in-cylinder conditions for stable and robust combustion of the post-injected fuel.

The module controls the exhaust AFR by actuating the EGR throttle.

DPF Co-ordinator Module

The DPF co-ordinator module reacts to a regeneration request from the supervisor module by initiating and co-ordinating the following DPF regeneration requests:

- EGR cut-off
- Turbocharger boost pressure control
- Engine load increase
- Control of air pressure in the intake manifold
- Fuel injection control

When the supervisor module issues a regeneration request, the co-ordinator module manages the change over to the regeneration specific settings. The change over occurs during an accelerator pedal release manoeuver from the driver or after a calibrated waiting time.

Pressure Differential Sensor

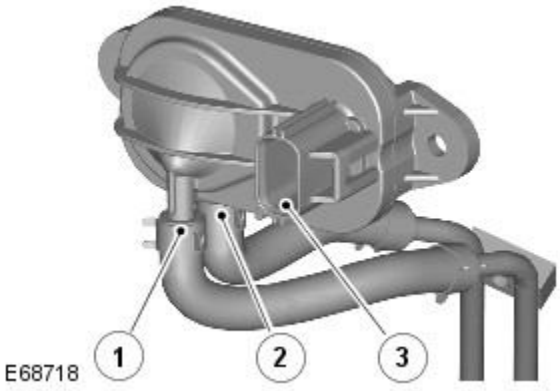

Item	Part Number	Description
1	-	High pressure connection
2	-	Low pressure connection
3	-	Electrical connector

The differential pressure sensor is located in the engine compartment, on the lower RH side of the bulkhead. The sensor is located on 2 studs and secured with nuts.

The differential pressure sensor is used by the DPF software to monitor the condition of the DPF. Two pipe connections on the sensor are connected by pipes to the inlet and outlet ends of the DPF. The pipes allow the sensor to measure the inlet and outlet pressures of the DPF.

As the amount of particulates trapped by the DPF increases, the pressure at the inlet side of the DPF increases in comparison to the DPF outlet. The DPF software uses this comparison, in conjunction with other data, to calculate the accumulated amount of trapped particulates.

By measuring the pressure difference between the DPF inlet and outlet and the DPF temperature, the DPF software can determine if the DPF is becoming blocked and requires regeneration.

Differential Particulate Filter Temperature Sensors

Two temperature sensors are used in the DPF system. One is located in the catalyst inlet and the second sensor is located in the DPF inlet.

The sensors measure the temperature of exhaust gas exiting the turbocharger and before it passes through the DPF and provides the information needed to calculate the DPF temperature.

The information is used, in conjunction with other data, to estimate the amount of accumulated particulates and to control the DPF temperature.

Instrument Cluster Indications

When the engine is at it's normal operating temperature and the vehicle is driven at moderate speeds, 30 mph (48 km/h), or more, a regeneration of the DPF takes place automatically. This means that the exhaust particles collected in the filter are burned away and the filter is emptied.

For drivers who make regular short journeys at low speeds, it may not be possible to efficiently regenerate the DPF. In this case, the DPF software will detect a blockage of the DPF from signals from the differential pressure sensor and will alert the driver by displaying a warning message 'DPF FULL' in the message center, plus either a RED or AMBER warning lamp.

CAUTION: If the warning message with the RED warning lamp is displayed, a Jaguar dealer/authorized repairer must be contacted as soon as possible before damage to the DPF occurs.

When the message is displayed with an AMBER priority warning lamp, regeneration is required.

CAUTION: If the vehicle continues to be driven with the AMBER warning lamp illuminated without regenerating the DPF, the RED warning lamp will illuminate.

• NOTE: Once triggered, the warning lamp and message will remain on until the ignition is switched to the 'OFF' position. Even though regeneration is still required, the warning lamp and message will only re-appear after 255 seconds of driving and sufficient pressure has built up in the DPF.

For more information, refer to the Owners Handbook.

Diesel Particulate Filter Side Effects

The following section details some side effects caused by the active regeneration process.

Engine Oil Dilution

Engine oil dilution can occur due to small amounts of fuel entering the engine crankcase during the post-injection phases. This has made it necessary to introduce a calculation based on driving style to reduce oil service intervals if necessary. The driver is alerted to the oil service by a message in the instrument cluster.

The DPF software monitors the driving style, the frequency of the active regeneration and duration. Using this information a calculation can be made on the engine oil dilution. When the DPF software calculates the engine oil dilution has reached a predetermined threshold (fuel being 7% of engine oil volume) a service message is displayed in the instrument cluster.

Depending on driving style, some vehicles may require an oil service before the designated interval. If a service message is displayed, the vehicle will be required have a full service and the service interval counter will be reset.

Fuel consumption

During the active regeneration process of the DPF, there will be an increase in fuel consumption. When active regeneration is operating, there will be a 100% increase in fuel consumption.

Exhaust System - Exhaust System

Diagnosis and Testing

Overview

For information on the description and operation of the diesel particulate filter (DPF) and catalytic converter systems:
REFER to: Exhaust System (309-00 Exhaust System, Description and Operation).

Inspection and verification

1. **1.** Verify the customer concern.
   - Confirm the illumination of any DPF warning lamps (red or amber) and any message center information.
   - Once the ignition is turned off, the warnings will disappear, but will reappear after 255 seconds of driving, or once sufficient pressure has built up in the DPF.
2. **2.** Visually inspect for obvious mechanical or electrical faults.

Visual inspection

Mechanical	Electrical
• Mufflers and pipes • Catalytic converter • Diesel particulate filter (DPF) • Exhaust gas recirculation (EGR) valve • Turbocharger	• Exhaust gas temperature sensors • Injectors • Differential pressure sensor and circuits • Exhaust gas recirculation (EGR) valve and circuits • Turbocharger and circuits • Glow plugs • Engine control module (ECM)

3. **3.** If an obvious cause for an observed or reported concern is found, correct the cause (if possible) before proceeding to the next step.
4. **4.** Use the approved diagnostic system or a scan tool to retrieve any diagnostic trouble codes (DTCs) before moving onto the symptom chart or DTC index.
   - Make sure that all DTCs are cleared following rectification.

Symptom chart

Condition	Possible source	Action
Engine oil dilution	• Fuel entering the crankcase during post-injection	Note that depending on driving style and use, some vehicles may require engine oil changes at less than usual service intervals. Check the message center and service history. Change the engine oil and reset the counter as necessary.
Excessive fuel consumption/poor performance	• Damaged/blocked exhaust pipe and/or muffler(s) • Blocked catalytic converter(s)	Inspect the exhaust system for damage. Disconnect the exhaust system from the catalytic converter(s) and check for restricted flow. Remove the catalytic converter(s) and inspect internally for damage. Install new components as necessary. REFER to: Exhaust System (309-00 Exhaust System, Description and Operation). Note that the fuel consumption increases while active regeneration is in operation, but as this happens infrequently there is only a slight increase in overall consumption.
Knocks/rattles from underside	• Exhaust system components insecure/damaged • Catalytic converter(s) damaged	Inspect the exhaust system for damage. Check the security of the system fittings. Tap the sides of the catalytic converter(s) with a soft-faced hammer and listen for movement inside the converter. Install new components as necessary. REFER to: Exhaust System (309-00 Exhaust System, Description and Operation).
Noise/fumes in vehicle	• Exhaust system components insecure/damaged • Leakage from joints	Inspect the exhaust system for damage. Check the security of the system fittings. In a well-ventilated area, close off the tailpipe(s) and check for evidence of leakage. Seal any leaks as necessary. REFER to: Exhaust System (309-00 Exhaust System, Description and Operation).

DTC index

• NOTE: For a full list of Engine Control Module (ECM) DTCs:
REFER to: Electronic Engine Controls (303-14B Electronic Engine Controls - 2.0L Duratorq-TDCi/2.2L Duratorq-TDCi (110kW/150PS) - Puma, Description and Operation).

DTC	Description	Possible cause	Action
P0544	Exhaust gas temperature sensor circuit, right-hand bank, upstream sensor	• Exhaust gas temperature sensor circuit: short circuit to ground • Exhaust gas temperature sensor circuit: open circuit • Exhaust gas temperature sensor circuit: short circuit to power • Exhaust gas temperature sensor fault	Refer to the approved diagnostic system for a guided diagnostic routine. Check the exhaust gas temperature sensor and circuits. Refer to the electrical guides. Rectify as necessary. Clear the DTCs, test for normal operation.
P0545	Exhaust gas temperature sensor circuit low, right-hand bank, upstream sensor	• Exhaust gas temperature sensor circuit: short circuit to ground • Exhaust gas temperature sensor circuit: open circuit • Exhaust gas temperature	Refer to the approved diagnostic system for a guided diagnostic routine. Check the exhaust gas temperature sensor and circuits. Refer to the electrical guides. Rectify as necessary. Clear the DTCs, test for normal operation.

DTC	Description	Possible cause	Action
		sensor fault	
P0546	Exhaust gas temperature sensor circuit high, right-hand bank, upstream sensor	• Exhaust gas temperature sensor circuit: short circuit to power • Exhaust gas temperature sensor fault	Refer to the approved diagnostic system for a guided diagnostic routine. Check the exhaust gas temperature sensor and circuits. Refer to the electrical guides. Rectify as necessary. Clear the DTCs, test for normal operation.
P1403	Differential pressure feedback sensor hoses reversed	• Diesel Particulate Filter (DPF) delta pressure sensor crossed hose fault	Check the correct connection of the hoses to the pressure sensor. Rectify as necessary. Clear the DTCs, test for normal operation.
P2031	Right-hand bank exhaust gas temperature sensor circuit, sensor 2	• Exhaust gas temperature sensor circuit: short circuit to ground • Exhaust gas temperature sensor circuit: open circuit • Exhaust gas temperature sensor circuit: short circuit to power • Exhaust gas temperature sensor fault	Refer to the approved diagnostic system for a guided diagnostic routine. Check the exhaust gas temperature sensor and circuits. Refer to the electrical guides. Rectify as necessary. Clear the DTCs, test for normal operation.
P2032	Right-hand bank exhaust gas temperature sensor circuit low, sensor 2	• Exhaust gas temperature sensor circuit: short circuit to ground • Exhaust gas temperature sensor fault	Refer to the approved diagnostic system for a guided diagnostic routine. Check the exhaust gas temperature sensor and circuits. Refer to the electrical guides. Rectify as necessary. Clear the DTCs, test for normal operation.
P2033	Right-hand bank exhaust gas temperature sensor circuit high, sensor 2	• Exhaust gas temperature sensor circuit: short circuit to power • Exhaust gas temperature sensor fault	Refer to the approved diagnostic system for a guided diagnostic routine. Check the exhaust gas temperature sensor and circuits. Refer to the electrical guides. Rectify as necessary. Clear the DTCs, test for normal operation.
P2080	Right-hand bank exhaust gas temperature sensor circuit range/performance, sensor 1	• Exhaust gas temperature sensor circuit: short circuit to ground • Exhaust gas temperature sensor circuit: open circuit • Exhaust gas temperature sensor circuit: short circuit to power • Exhaust gas temperature sensor fault	Refer to the approved diagnostic system for a guided diagnostic routine. Check the exhaust gas temperature sensor and circuits. Refer to the electrical guides. Rectify as necessary. Clear the DTCs, test for normal operation.
P2081	Right-hand bank exhaust gas temperature sensor circuit intermittent, sensor 1	• Exhaust gas temperature sensor circuit: intermittent high resistance • Exhaust gas temperature sensor fault	Refer to the approved diagnostic system for a guided diagnostic routine. Check the exhaust gas temperature sensor and circuits. Refer to the electrical guides. Rectify as necessary. Clear the DTCs, test for normal operation.
P2085	Right-hand bank exhaust gas temperature sensor circuit intermittent, sensor 2	• Exhaust gas temperature sensor circuit: intermittent high resistance • Exhaust gas temperature sensor fault	Refer to the approved diagnostic system for a guided diagnostic routine. Check the exhaust gas temperature sensor and circuits. Refer to the electrical guides. Rectify as necessary. Clear the DTCs, test for normal operation.
P242F	Diesel particulate filter (DPF)restriction - ash accumulation	• DPF blocked	Install a new DPF as necessary. REFER to: Diesel Particulate Filter (DPF) (309-00 Exhaust System, Removal and Installation). Clear the DTCs, test for normal operation.
P244A	Diesel particulate filter (DPF)differential pressure too low	• DPF leaking	Install a new DPF as necessary. REFER to: Diesel Particulate Filter (DPF) (309-00 Exhaust System, Removal and Installation). Clear the DTCs, test for normal operation.
P244B	Diesel particulate filter (DPF)differential pressure too high	• DPF overloaded	Carry out the regeneration procedure. Clear the DTCs, test for normal operation.
P244C	Exhaust temperature too low for particulate filter regeneration	• Insufficient mileage/speed for regeneration	Carry out the regeneration procedure. Clear the DTCs, test for normal operation.
P2452	Diesel particulate filter (DPF)pressure sensor A circuit	• DPF delta pressure sensor circuit fault • DPF delta pressure sensor fault	Check the DPF delta pressure sensor and circuits. Refer to the electrical guides. Rectify as necessary.
P2453	Diesel particulate filter (DPF)pressure sensor A circuit range/performance	• DPF delta pressure sensor hose fault • DPF delta pressure sensor fault	Refer to the approved diagnostic system for a guided diagnostic routine. Check the condition and fitment of the DPF delta pressure sensor and hoses. Rectify as necessary.

Exhaust System - Catalytic Converter2.0L Duratorq-TDCi / 2.2L Duratorq-TDCi (110kW / 150PS) - Puma

Removal and Installation

Removal

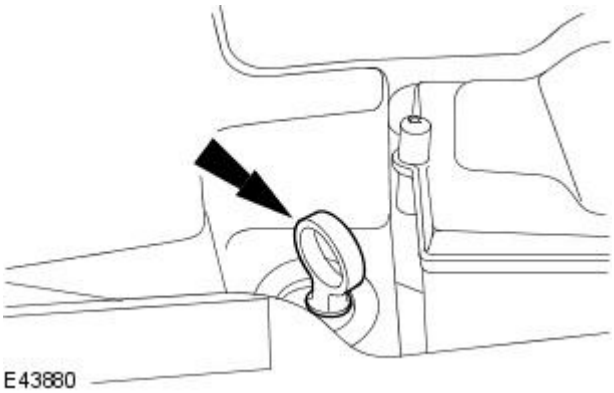

1. Remove the oil level indicator.

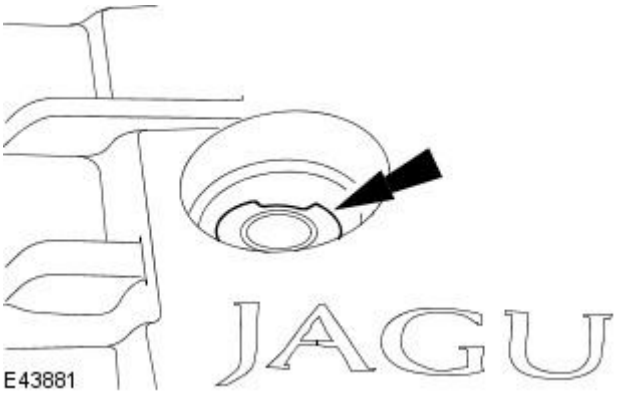

2. Remove the oil filler cap.

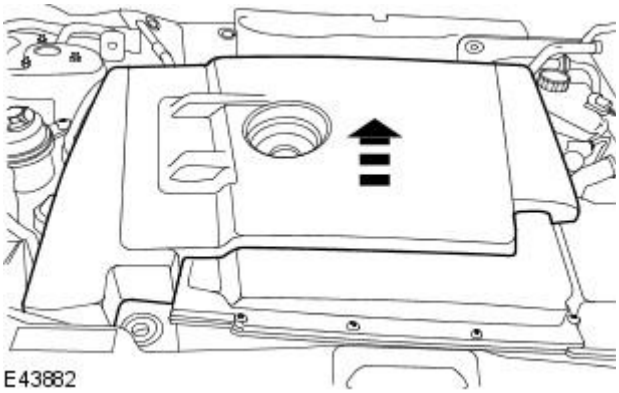

3. NOTE: Install the oil filler cap and oil level indicator to prevent foreign material entering the valve cover.

Remove the engine cover.

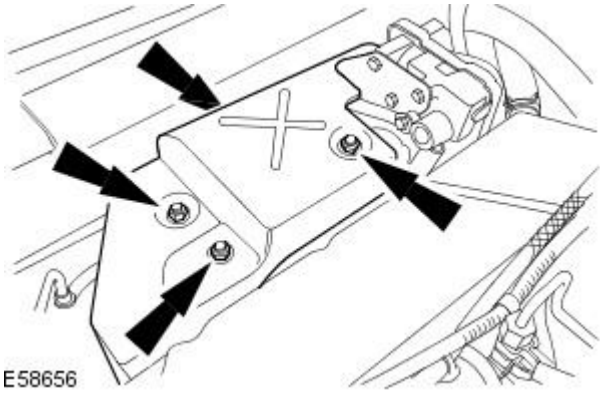

4. Remove the turbocharger heatshield.

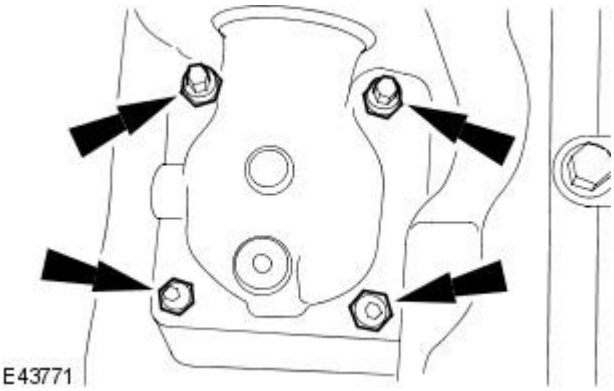

5. Remove the catalytic converter to turbocharger retaining nuts.

- Remove and discard the retaining nuts.

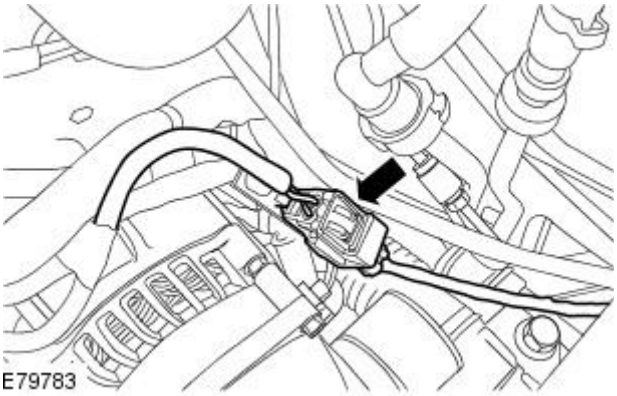

6. Disconnect the catalytic converter temperature sensor electrical connector.

7. Remove the exhaust flexible pipe.
For additional information, refer to: Exhaust Flexible Pipe - 2.0L Duratorq-TDCi/2.2L Duratorq-TDCi (110kW/150PS) - Puma (309-00 Exhaust System, Removal and Installation).

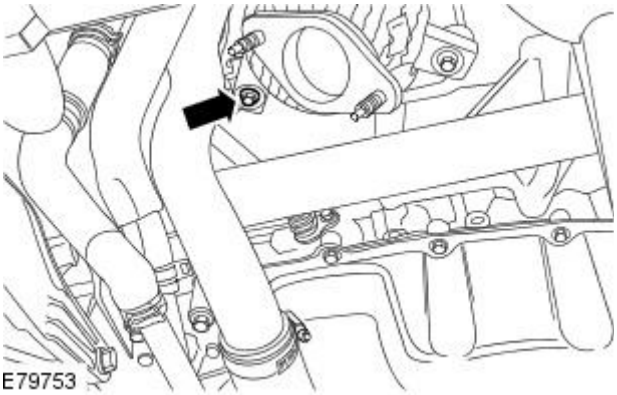

8. Remove the turbocharger outlet pipe retaining bolt.

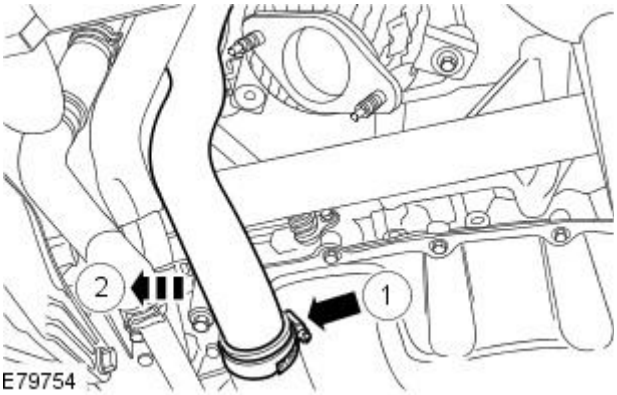

9. Detach the turbocharger outlet pipe.

1. Loosen the retaining clip.
2. Reposition the pipe.

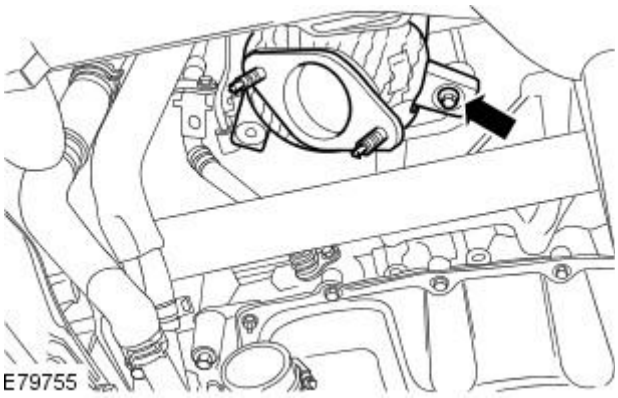

10. Remove the catalytic converter.

- Remove the securing bolt.
- Remove and discard the gasket.

Installation

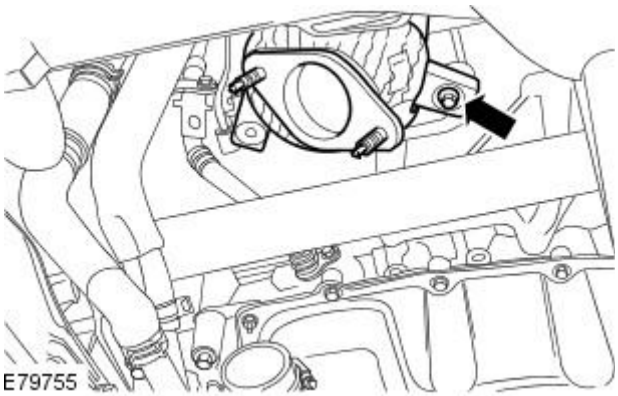

1. CAUTION: Never use jointing compound forward of the catalytic converter.

• NOTE: Coat the catalytic converter studs with anti-seize grease.

Install the catalytic converter.

- Loosely install the catalytic converter retaining bolt.
- Install a new gasket.

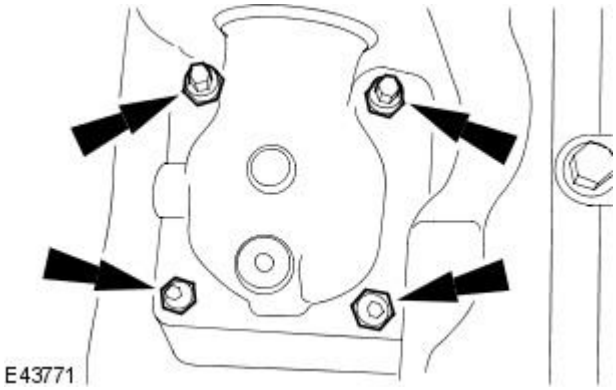

2. Lower the vehicle.

3. Install the catalytic converter to turbocharger retaining nuts.

- Tighten to 46 Nm.
- Install new retaining nuts.

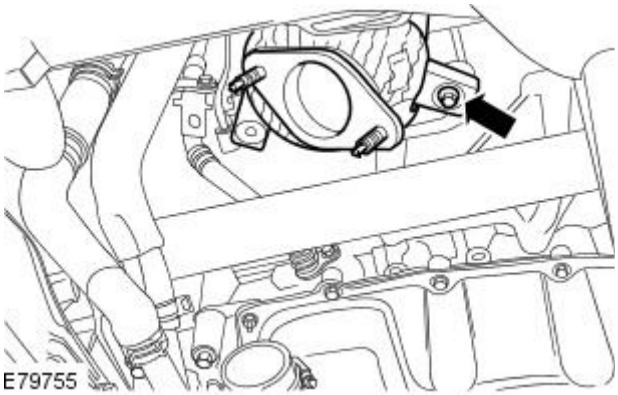

4. Raise the vehicle.

5. Tighten the catalytic converter retaining bolt.

- Tighten to 46 Nm.

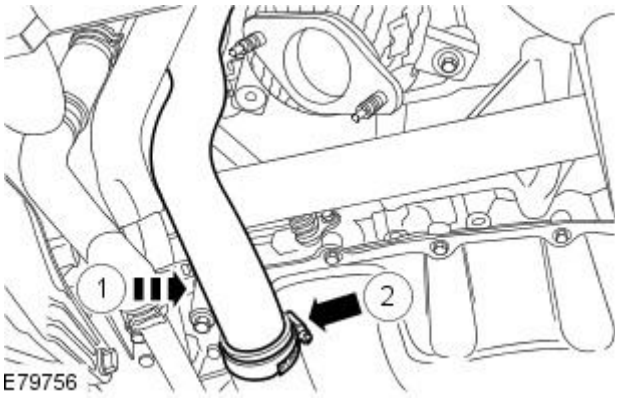

6. Attach the turbocharger outlet pipe.

1. Reposition the pipe.
2. Tighten the retaining clip.

- Tighten to 4 Nm.

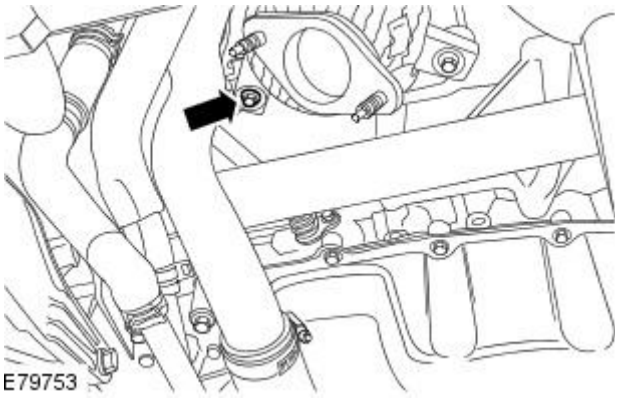

7. Install the turbocharger outlet pipe retaining bolt.

- Tighten to 46 Nm.

8. Install the exhaust flexible pipe.
For additional information, refer to: Exhaust Flexible Pipe - 2.0L Duratorq-TDCi/2.2L Duratorq-TDCi (110kW/150PS) - Puma (309-00 Exhaust System, Removal and Installation).

9. Connect the catalytic converter temperature sensor electrical connector.

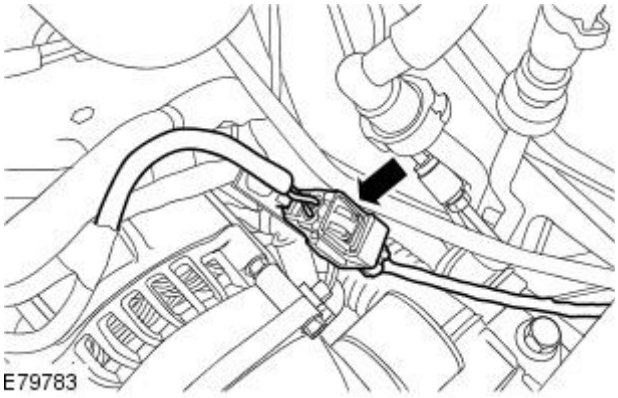

10. Install the turbocharger heatshield.

- Tighten to 8 Nm.

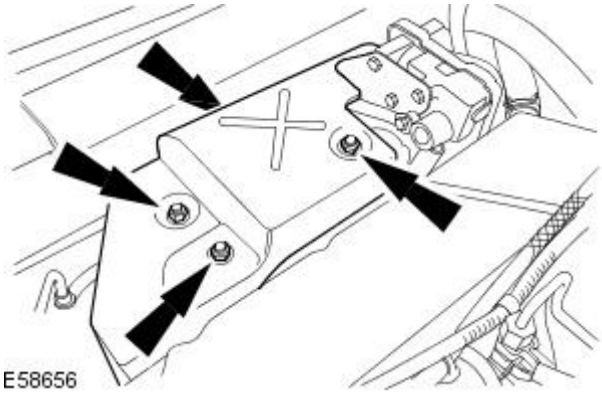

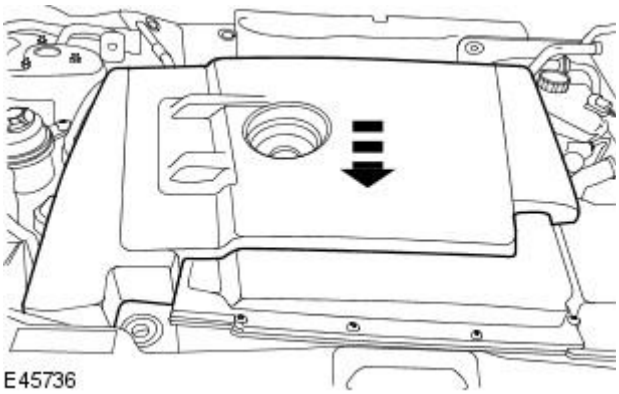

11. NOTE: Remove the oil filler cap and oil level indicator.

Install the engine cover.

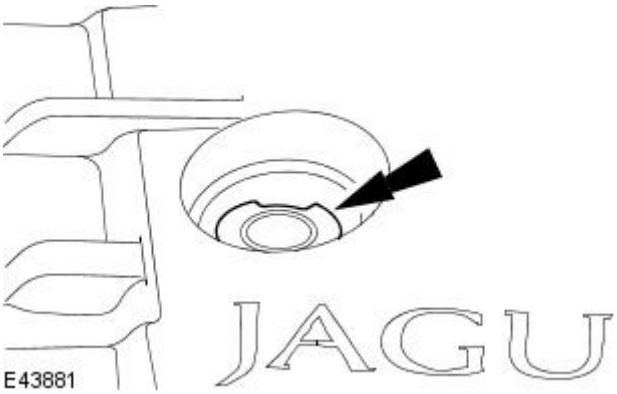

12. Install the oil filler cap.

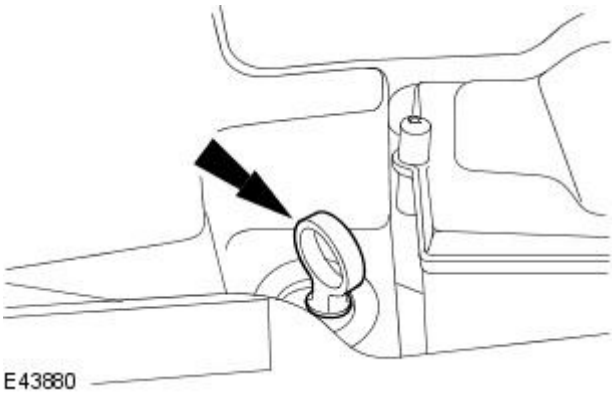

13. Install the oil level indicator.

Exhaust System - Catalytic Converter LH2.0L NA V6 - AJV6 / 2.5L NA V6 - AJV6 / 3.0L NA V6 - AJ27

Removal and Installation

Removal

1. Disconnect the battery ground cable. For additional information, refer to For additional information, refer to: Battery Disconnect and Connect (414-01 Battery, Mounting and Cables, General Procedures).
.
2. Remove the cooling fan motor and shroud. For additional information, refer to
For additional information, refer to: Cooling Fan Motor and Shroud (303-03A Engine Cooling - 2.0L NA V6 - AJV6/2.5L NA V6 - AJV6/3.0L NA V6 - AJ27, Removal and Installation).
.
3. Disconnect the heated oxygen sensor (HO2S) electrical connector.

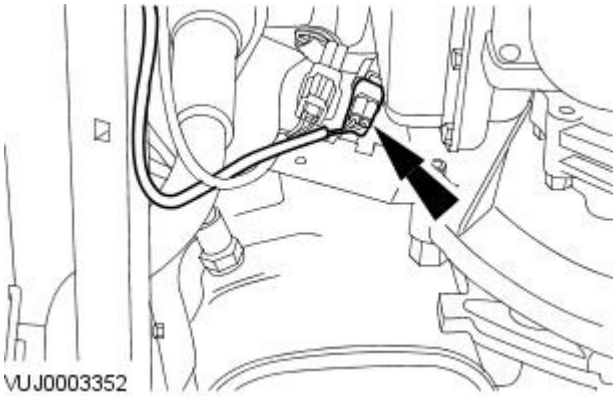

4. Disconnect the catalyst monitor sensor electrical connector.

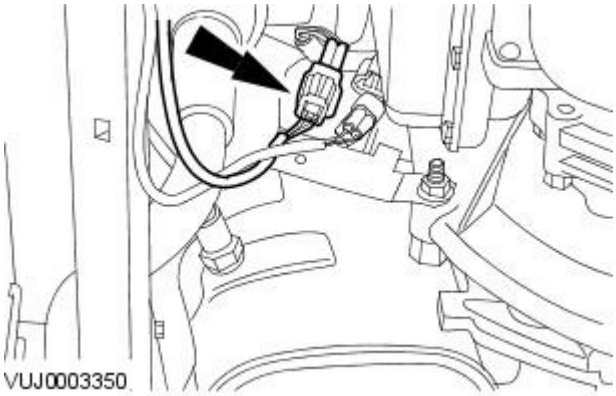

5. Remove the catalyst to support bracket retaining bolt.

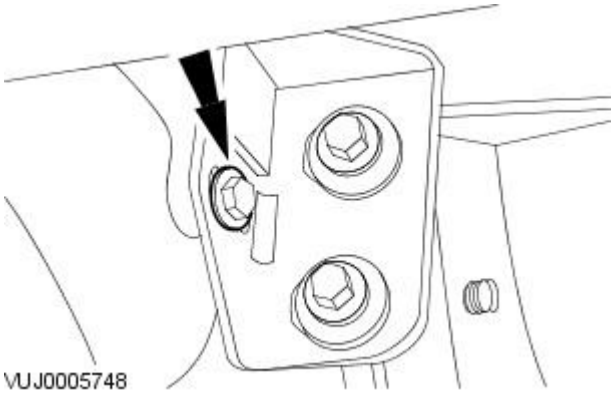

6. NOTE: 2.5L and 3.0L shown, 2.0L similar.

   Detach the muffler inlet pipe.

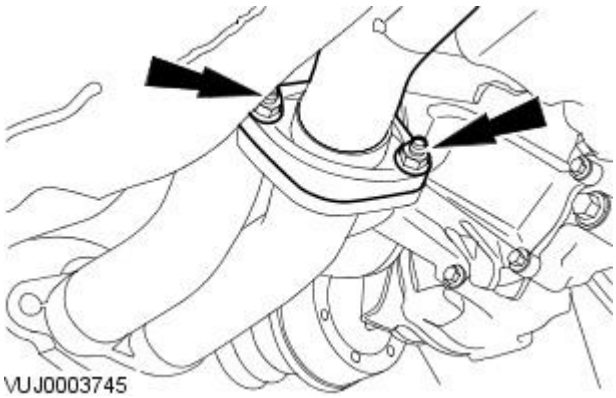

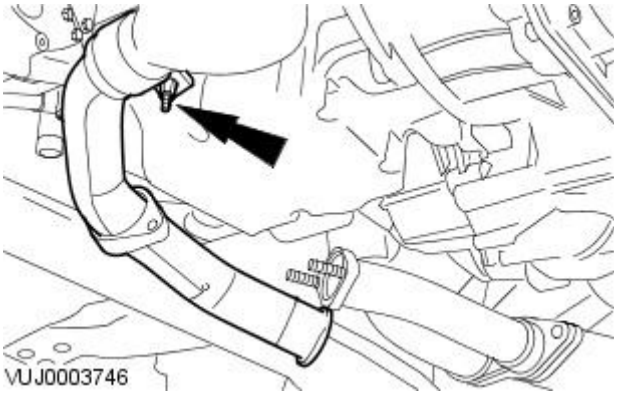

7. Remove the front pipe.

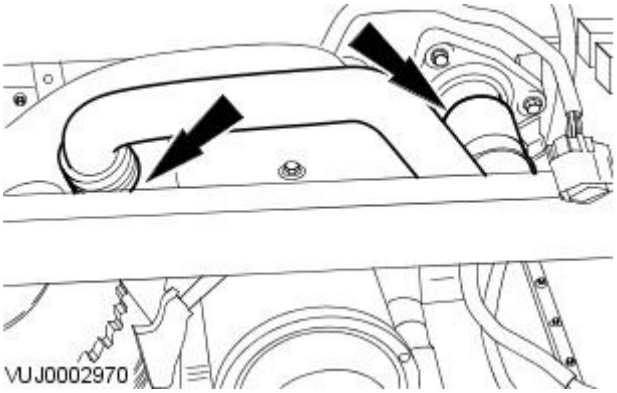

8. Remove the thermostat housing to oil cooler coolant pipe.

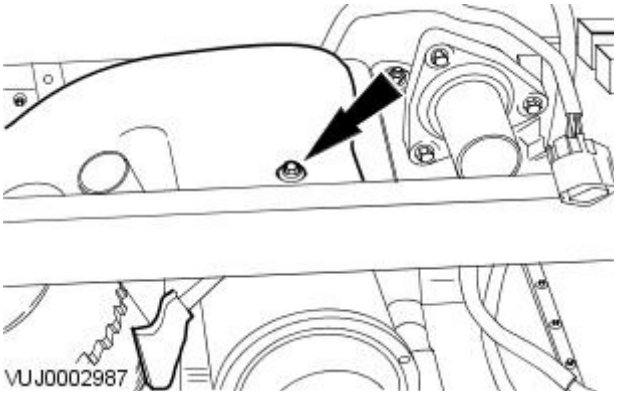

9. Remove the catalytic converter heat shield lower retaining bolt.

10. Lower the vehicle.

11. Detach and reposition the wiring harnesses.

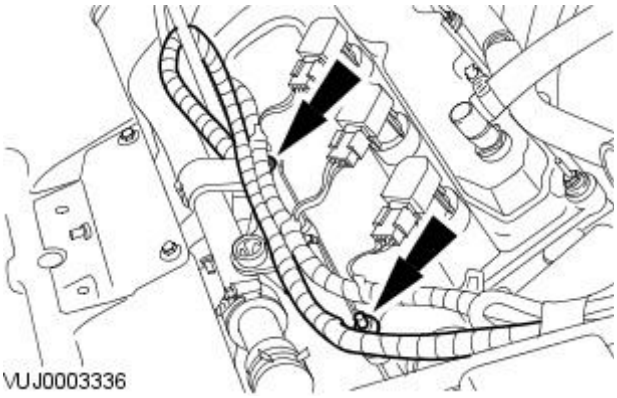

12. Remove the air cleaner retaining bracket.

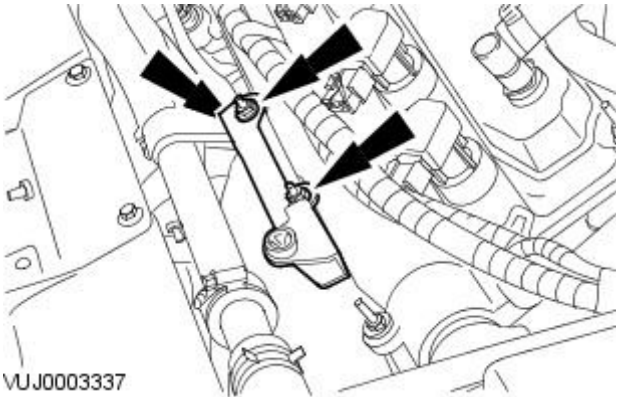

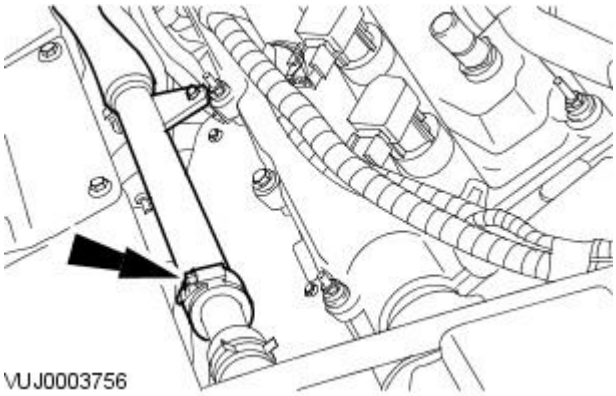

13. Detach and reposition the radiator inlet coolant pipe.

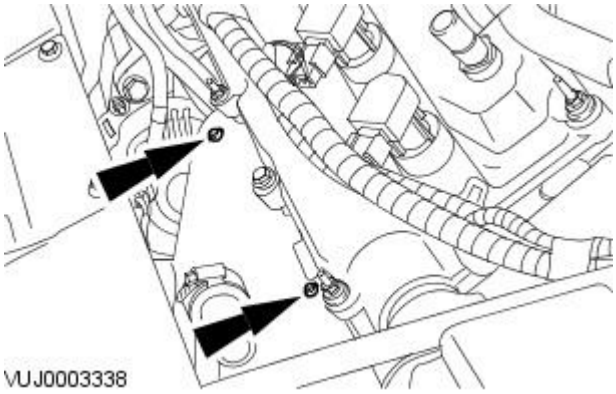

14. Remove the catalytic converter heat shield.

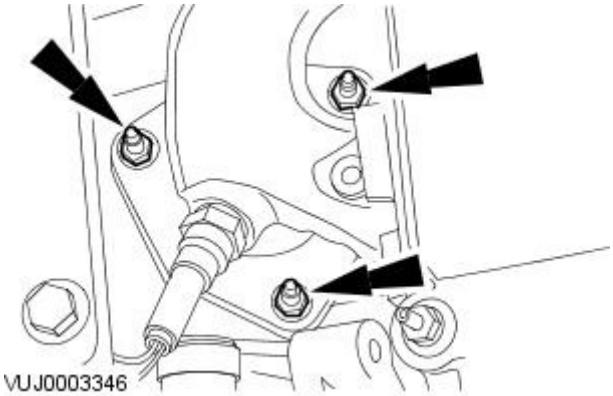

15. Remove the catalytic converter.

- Discard the retaining nuts.

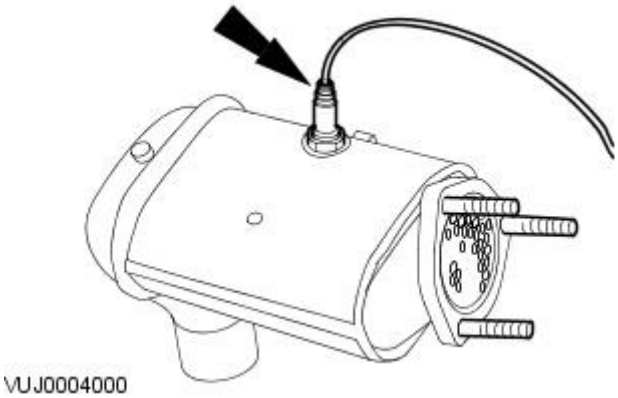

16. Remove the HO2S.

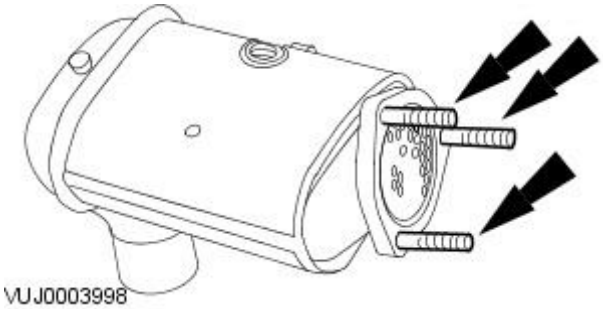

17. Remove and discard the catalytic converter retaining studs.

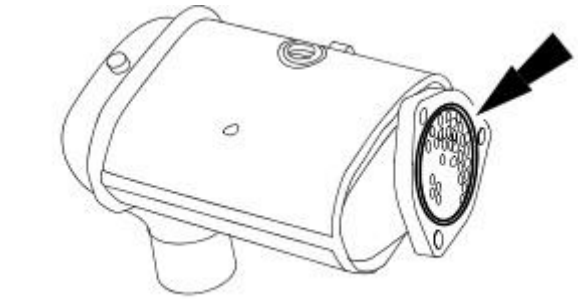

VUJ0003999

18. Remove and discard the sealing ring.

Installation

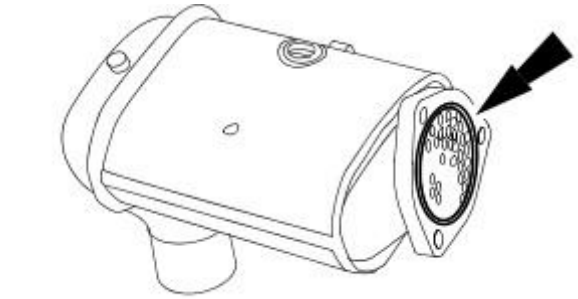

VUJ0003999

1. CAUTION: Never use jointing compound forward of the catalytic converter.

To install, reverse the removal procedure.

- Install a new sealing ring.

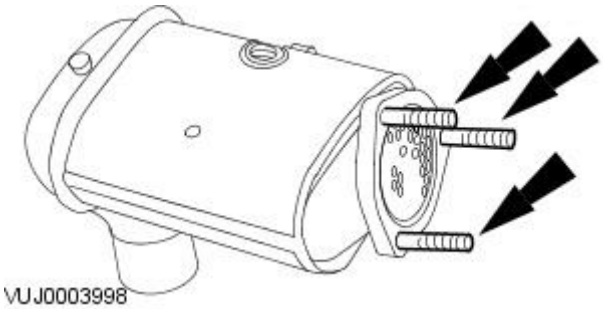

VUJ0003998

2. Install new catalytic converter retaining studs.

- Tighten to 9 Nm.

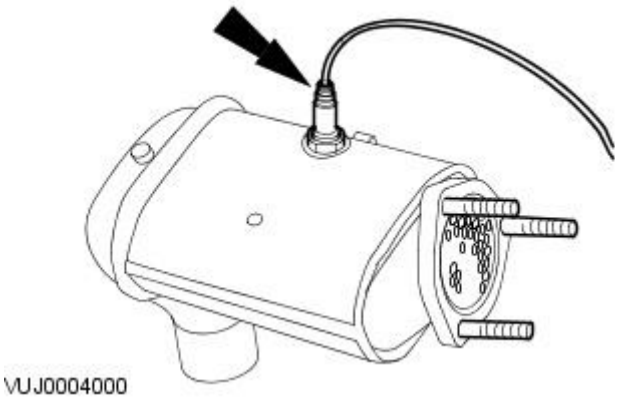

VUJ0004000

3. Tighten to 40 Nm.

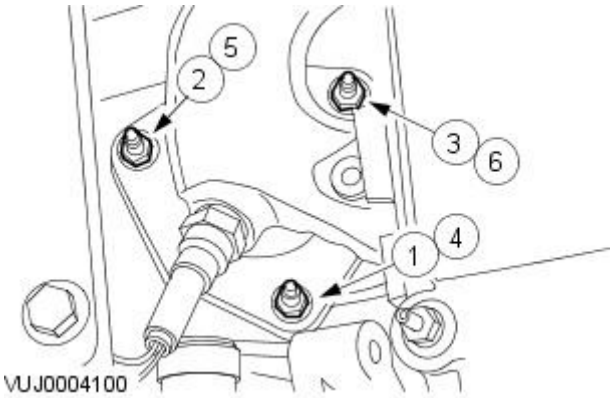

VUJ0004100

4. NOTE: Make sure that the retaining nuts are tightened twice in the sequence shown.

Tighten in the sequence shown to 25 Nm.

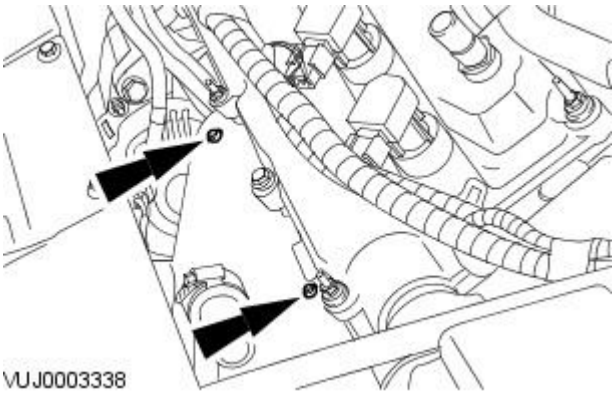

5. Tighten to 10 Nm.

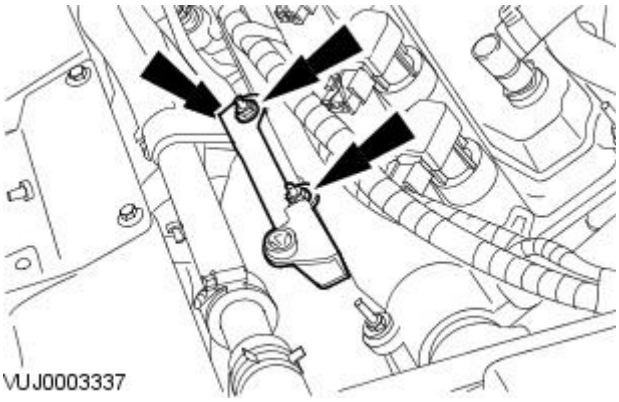

6. Tighten to 6 Nm.

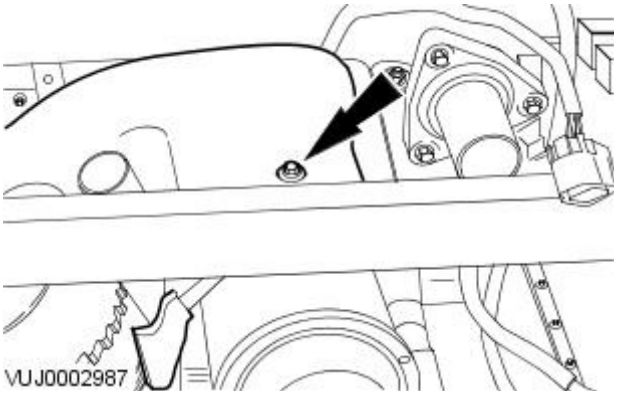

7. Tighten to 10 Nm.

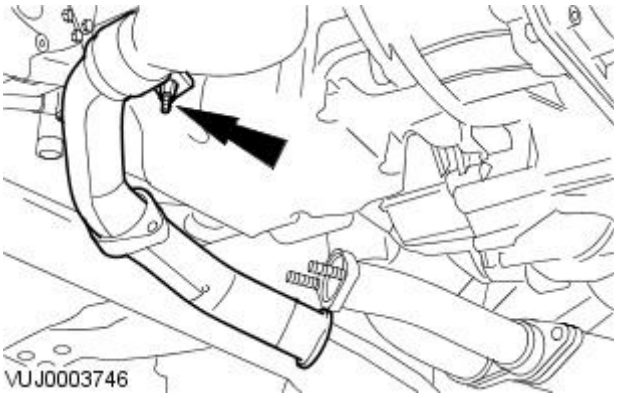

8. Tighten to 55 Nm.

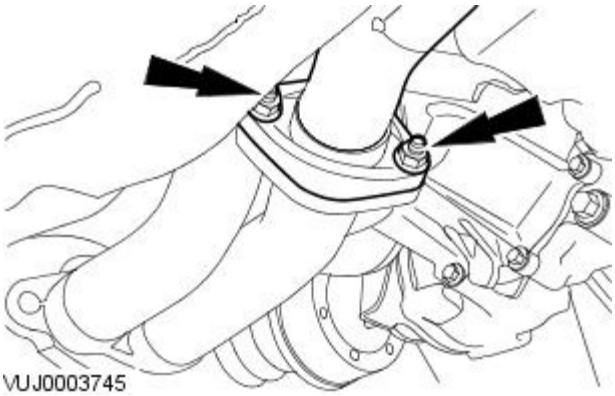

9. NOTE: 2.5L and 3.0L shown, 2.0L similar.

Tighten to 55 Nm.

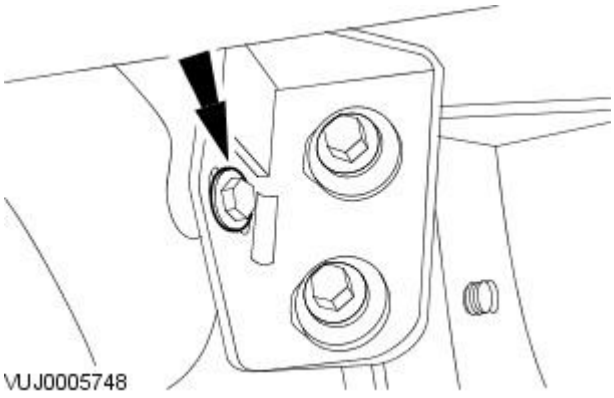

10. Tighten to 25 Nm.

11. NOTE: For NAS vehicles only.

If required, carry out a long drive cycle.
For additional information, refer to: Powertrain Control Module (PCM) Long Drive Cycle Self-Test (303-14A Electronic Engine Controls - 2.0L NA V6 - AJV6/2.5L NA V6 - AJV6/3.0L NA V6 - AJ27, General Procedures).

Exhaust System - Catalytic Converter RH2.0L NA V6 - AJV6 / 2.5L NA V6 - AJV6 / 3.0L NA V6 - AJ27

Removal and Installation

Removal

1. Remove the front subframe. For additional information, refer to For additional information, refer to: Front Subframe - 2.0L NA V6 - AJV6/2.5L NA V6 - AJV6/3.0L NA V6 - AJ27 (502-00 Uni-Body, Subframe and Mounting System, Removal and Installation).
.

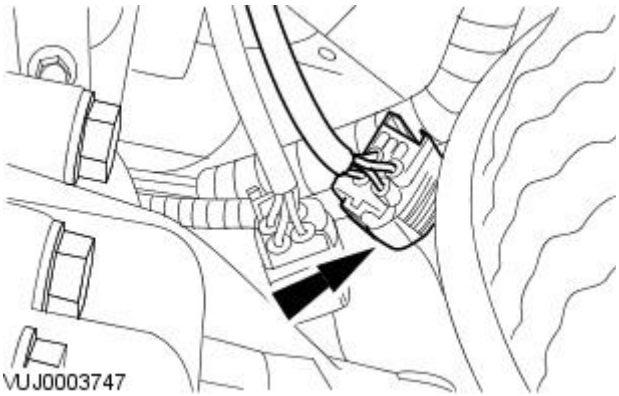

2. NOTE: 2.5L and 3.0L shown, 2.0L similar.

   Disconnect the catalyst monitor sensor electrical connector.

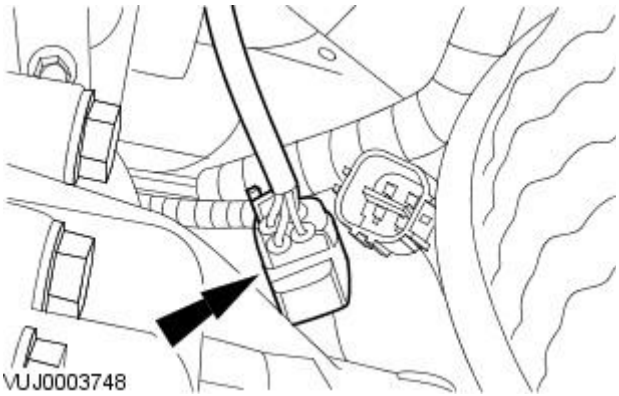

3. NOTE: 2.5L and 3.0L shown, 2.0L similar.

   Disconnect the heated oxygen sensor (HO2S) electrical connector.

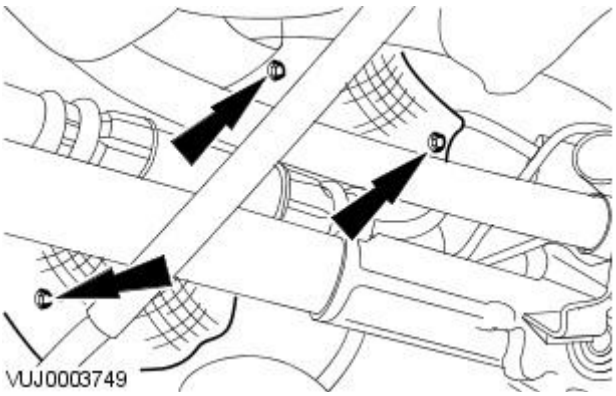

4. NOTE: 2.5L and 3.0L shown, 2.0L similar.

   Remove the exhaust heat shield.

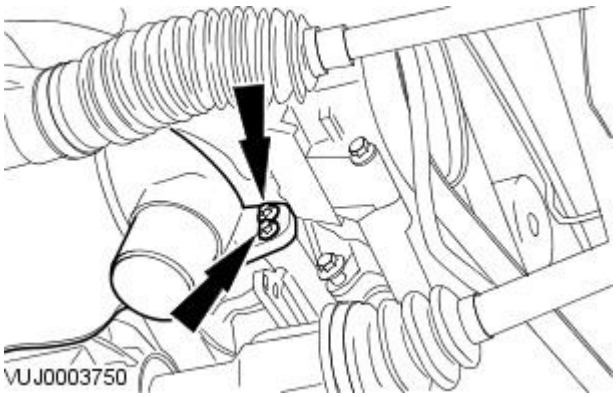

5. NOTE: 2.5L and 3.0L shown, 2.0L similar.

   Remove the catalytic converter retaining bolts.

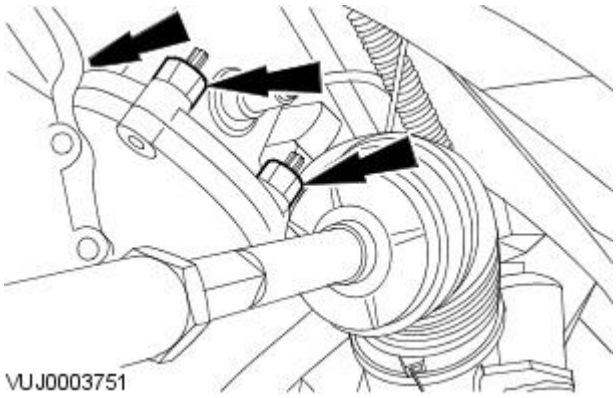

6. NOTE: 2.5L and 3.0L shown, 2.0L similar.

Remove and discard the retaining nuts.

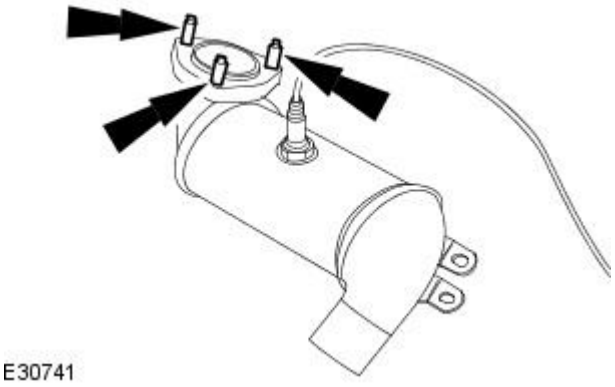

7. Remove and discard the retaining studs.

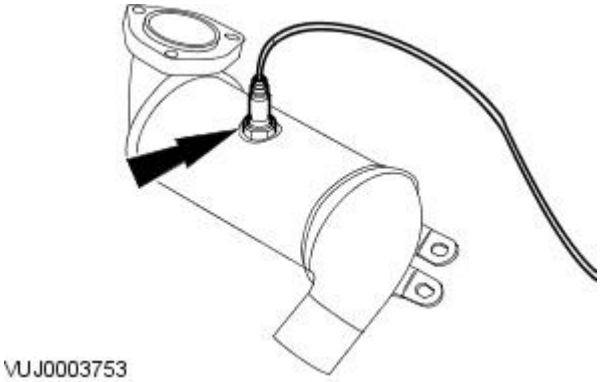

8. Remove the HO2S.

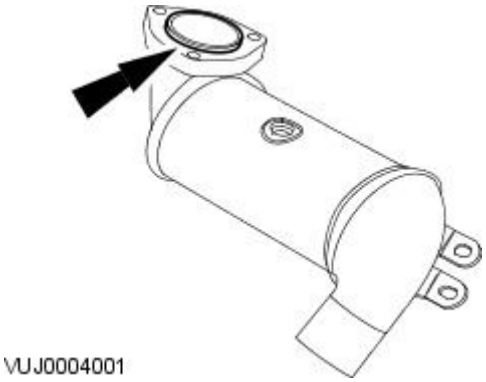

9. Remove and discard the sealing ring.

Installation

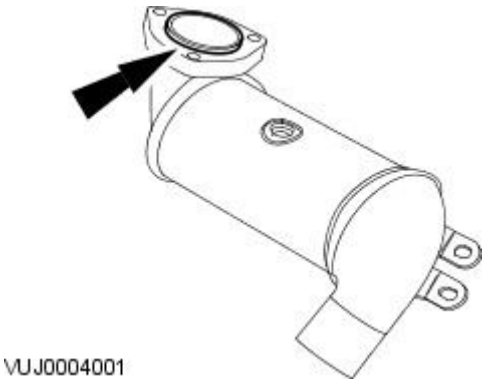

1. CAUTION: Never use jointing compound forward of the catalytic converter.

To install, reverse the removal procedure.

- Install a new sealing ring.

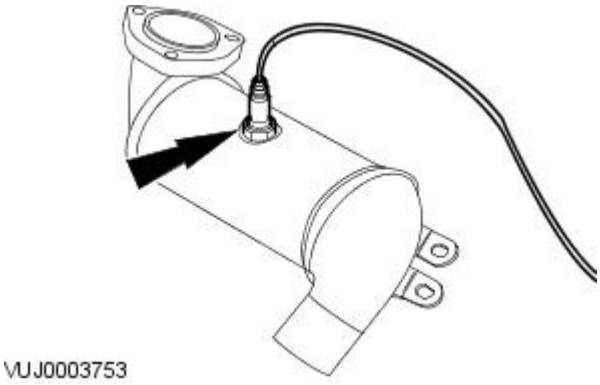

2. Tighten to 40 Nm.

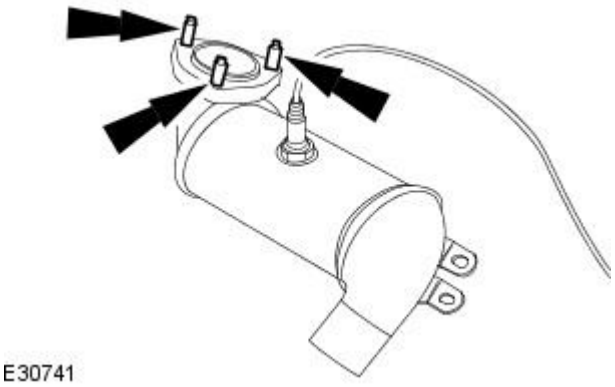

3. Install new retaining studs.

- Tighten to 9 Nm.

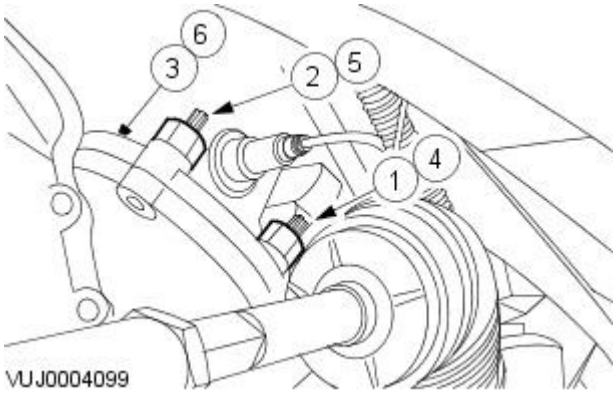

4. NOTE: 2.5L and 3.0L shown, 2.0L similar.

• NOTE: Make sure that the retaining nuts are tightened twice in the sequence shown.

Tighten in the sequence shown to 25 Nm.

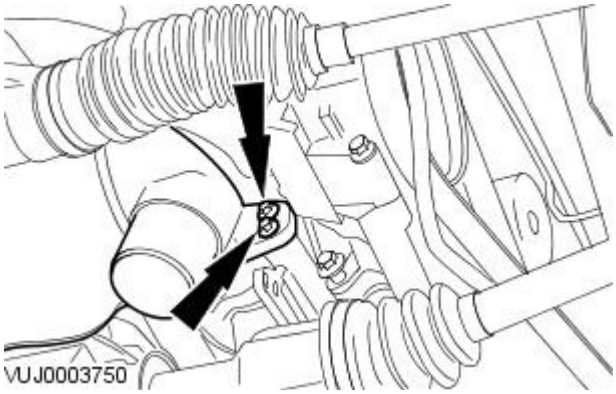

5. NOTE: 2.5L and 3.0L shown, 2.0L similar.

Tighten to 25 Nm.

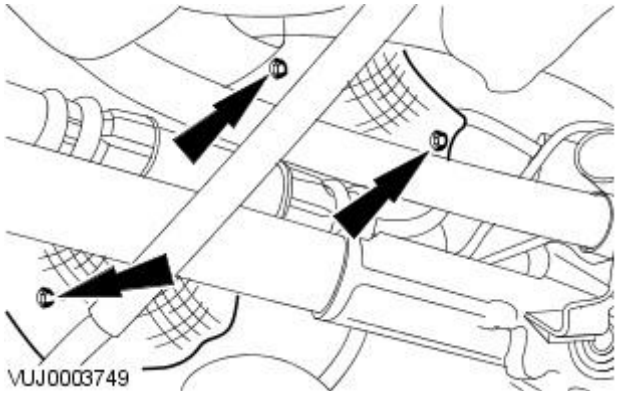

6. NOTE: 2.5L and 3.0L shown, 2.0L similar.

Tighten to 10 Nm.

7. NOTE: For NAS vehicles only.

If required, carry out a long drive cycle.
For additional information, refer to: Powertrain Control Module (PCM) Long Drive Cycle Self-Test (303-14A Electronic Engine Controls - 2.0L NA V6 - AJV6/2.5L NA V6 - AJV6/3.0L NA V6 - AJ27, General Procedures).

Exhaust System - Diesel Particulate Filter (DPF)

Removal and Installation

Removal

1. Raise and support the vehicle.
   For additional information, refer to: Lifting (100-02 Jacking and Lifting, Description and Operation).
2. Disconnect the diesel particulate filter temperature sensor electrical connector.

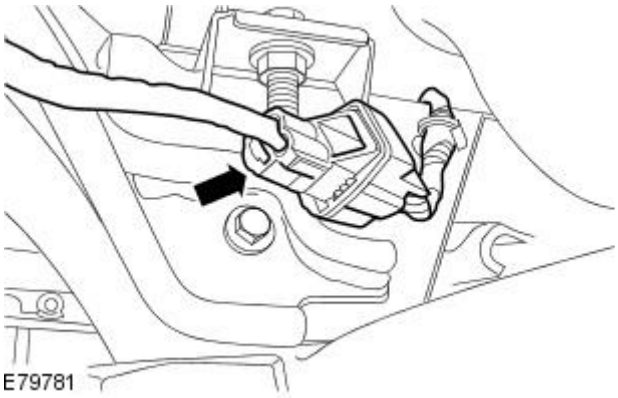

3. NOTE: Note the orientation of the diesel particulate filter high-pressure and low-pressure hoses and make sure they are installed in the same position.

   Detach the diesel particulate filter low-pressure hose.

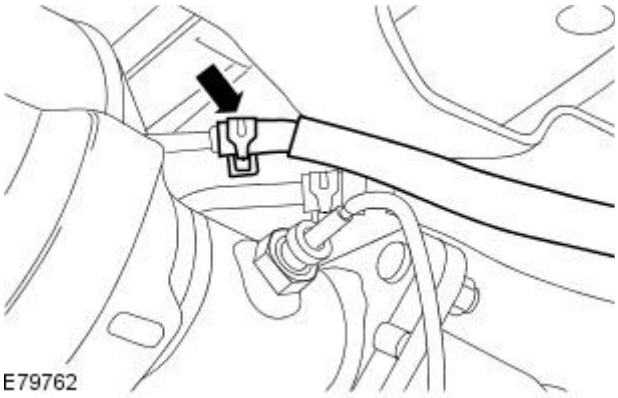

4. NOTE: Note the orientation of the diesel particulate filter high-pressure and low-pressure hoses and make sure they are installed in the same position.

   Detach the diesel particulate filter high-pressure hose.

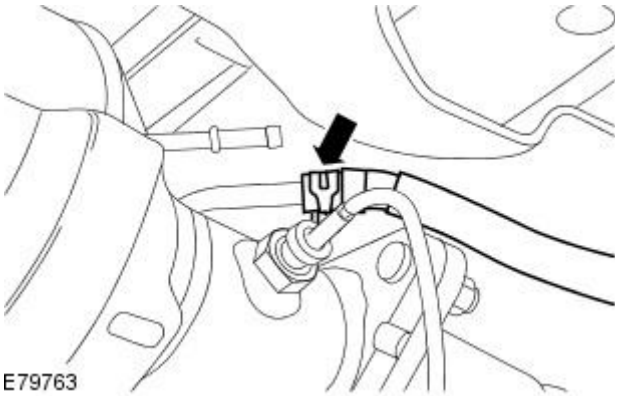

5. Detach the diesel particulate filter support isolator.

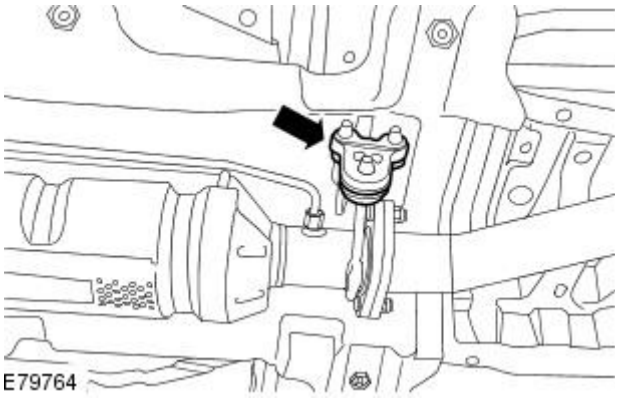

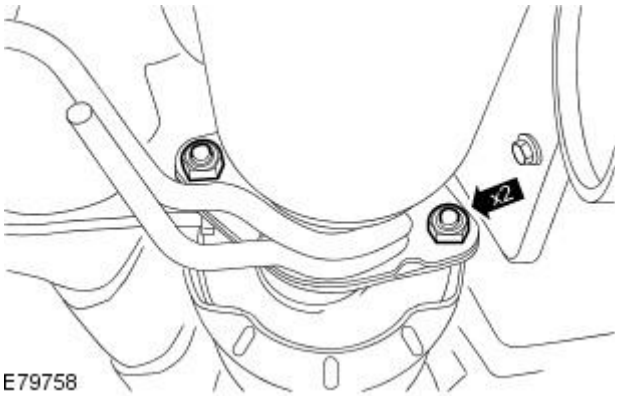

6. Remove the diesel particulate filter to flexible pipe retaining nuts.

- Remove and discard the gasket and nuts.

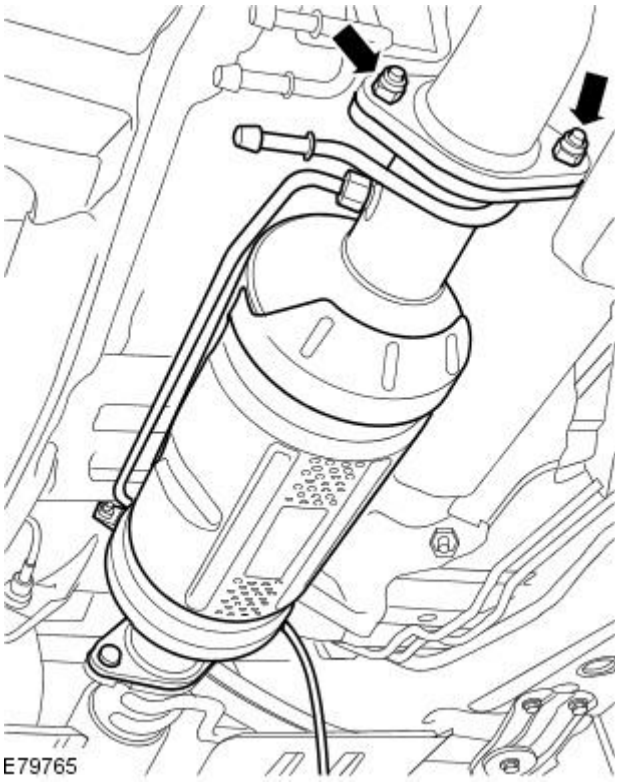

7. Remove the diesel particulate filter.

- Remove and discard the gasket and nuts.

Installation

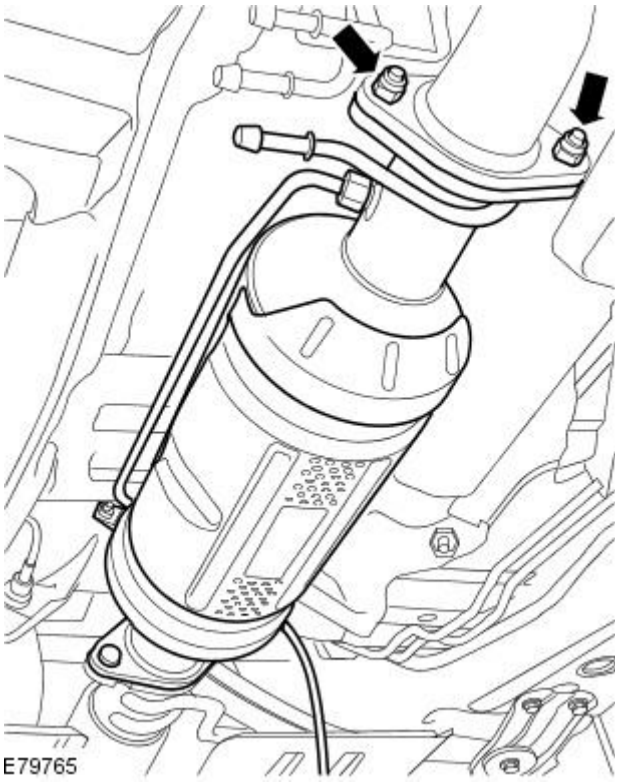

1. To install, reverse the removal procedure.

- Tighten to 46 Nm.
- Install a new gasket and nuts.

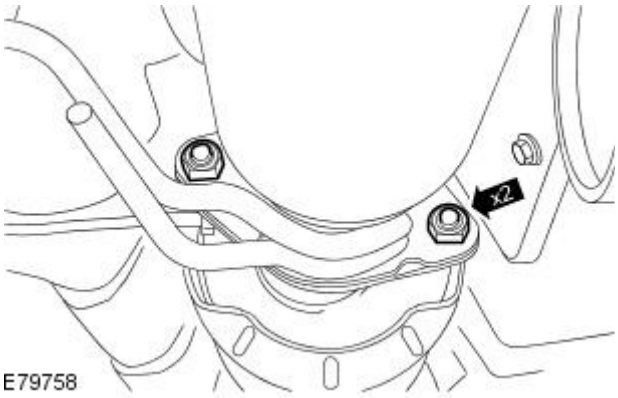

2. Tighten to 46 Nm.

- Install a new gasket and nuts.

www.JagDocs.com

Exhaust System - Diesel Particulate Filter (DPF) Differential Pressure Sensor

Removal and Installation

Removal

1. Remove the air cleaner outlet pipe.
   For additional information, refer to: Air Cleaner Outlet Pipe (303-12B Intake Air Distribution and Filtering - 2.0L Duratorq-TDCi/2.2L Duratorq-TDCi (110kW/150PS) - Puma, Removal and Installation).
2. NOTE: Note the orientation of the retaining clip.

   Detach the diesel particulate filter (DPF) high-pressure and low-pressure hoses.

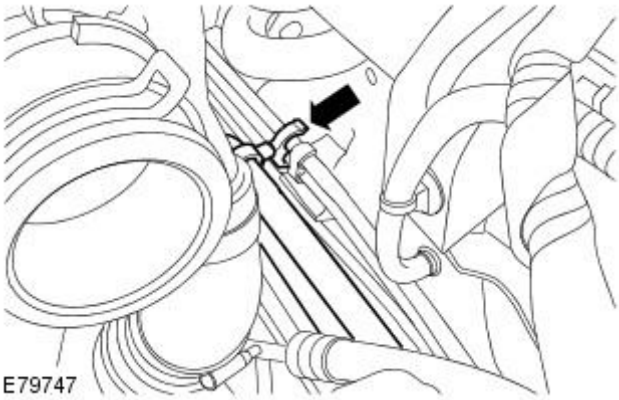

3. Detach the wiring harness.

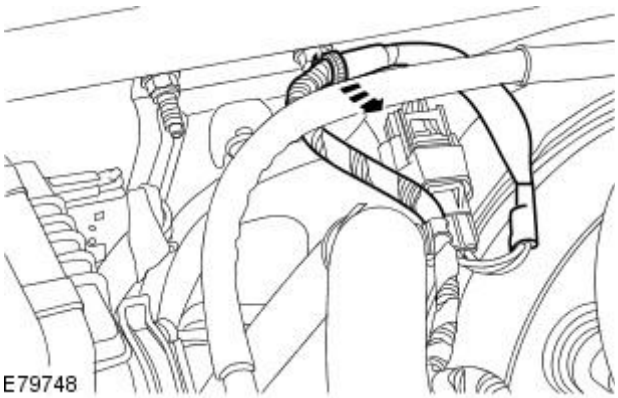

4. Detach the DPF differential pressure sensor retaining bracket.
   - Remove the retaining nuts.

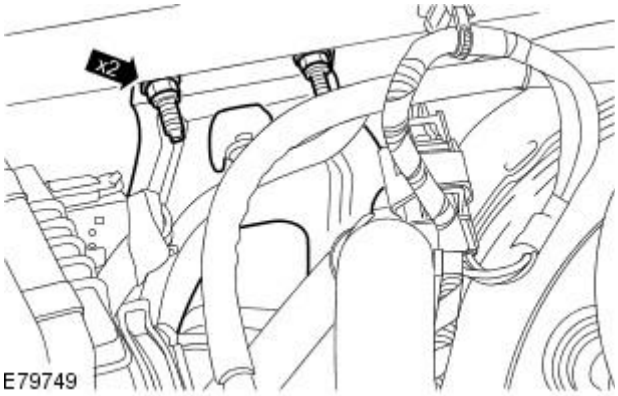

5. Disconnect the DPF differential pressure sensor electrical connector.

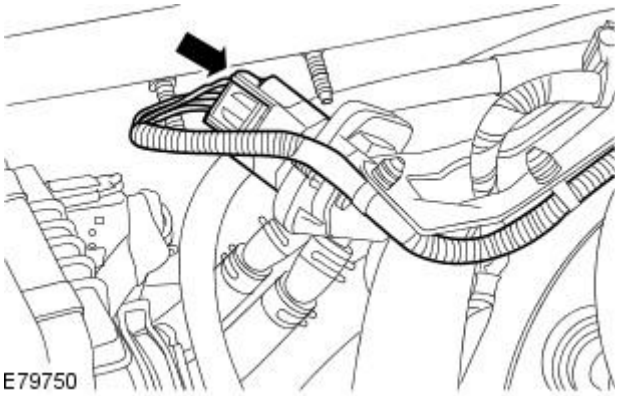

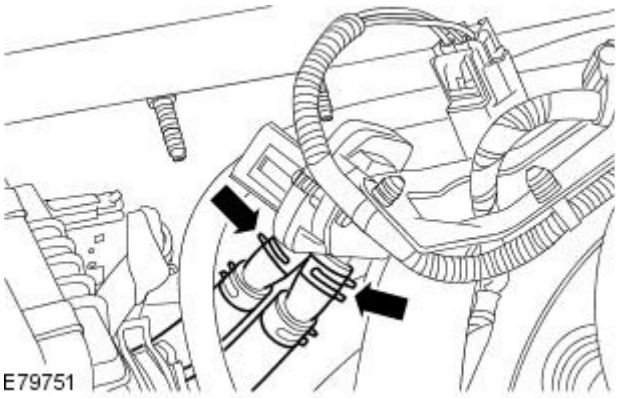

6. NOTE: Note the orientation of the DPF differential pressure high-pressure and low-pressure hoses and make sure they are installed in the same position.

Disconnect the DPF differential pressure sensor high-pressure and low-pressure hoses.

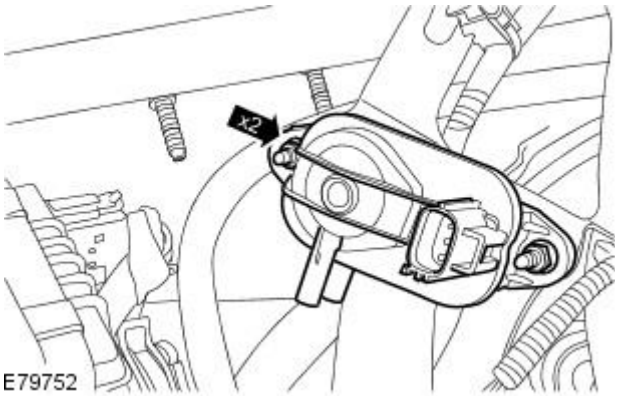

7. Remove the DPF differential pressure sensor.

- Remove the retaining nuts.

Installation

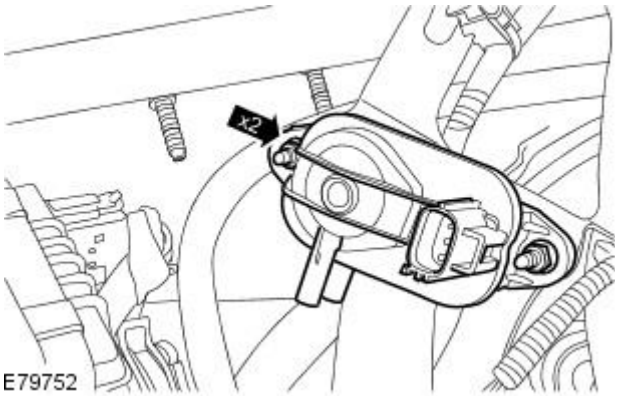

1. To install, reverse the removal procedure.

- Tighten to 5 Nm.

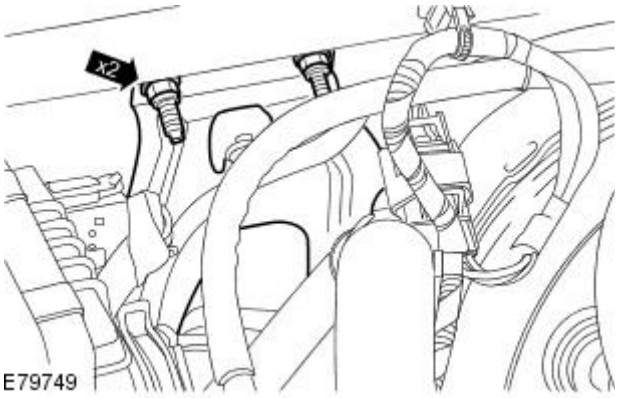

2. Tighten to 4 Nm.

Exhaust System - Exhaust Flexible Pipe2.0L Duratorq-TDCi / 2.2L Duratorq-TDCi (110kW / 150PS) - Puma

Removal and Installation

Removal

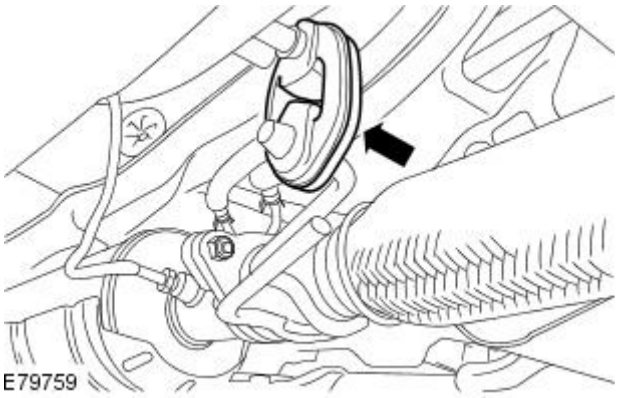

1. Remove the air deflector.
   For additional information, refer to: Air Deflector - 2.0L Duratorq-TDCi/2.2L Duratorq-TDCi (110kW/150PS) - Puma (501-02 Front End Body Panels, Removal and Installation).
2. Detach the exhaust flexible pipe support isolator.

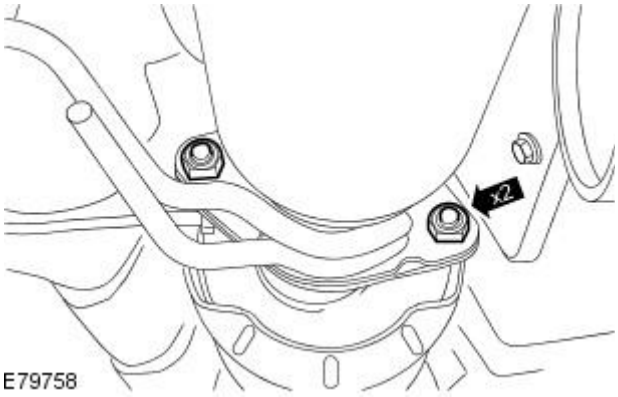

3. Remove the exhaust flexible pipe retaining nuts.
   - Remove and discard the gasket and nuts.

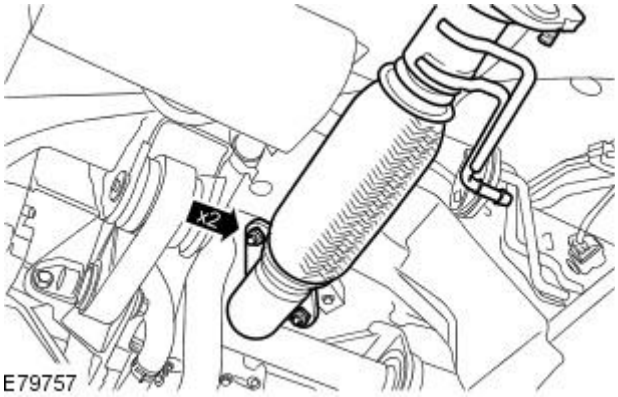

4. CAUTION: Over bending of the exhaust flexible pipe may result in damage to the component.

   Remove the exhaust flexible pipe.
   - Remove and discard the gasket and nuts.

Installation

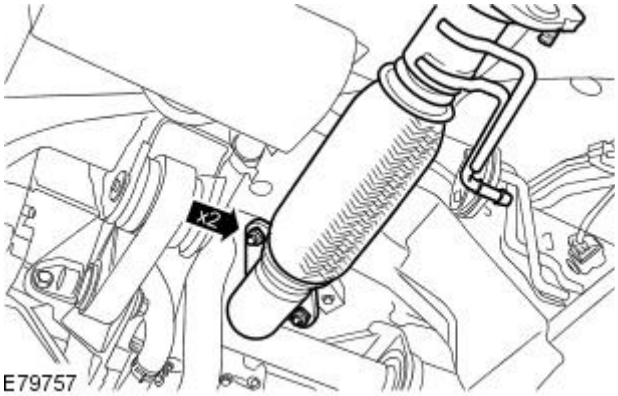

1. CAUTION: Over bending of the exhaust flexible pipe may result in damage to the component.

   To install, reverse the removal procedure.
   - Install a new exhaust flexible pipe gasket and nuts.
   - Tighten to 46 Nm.

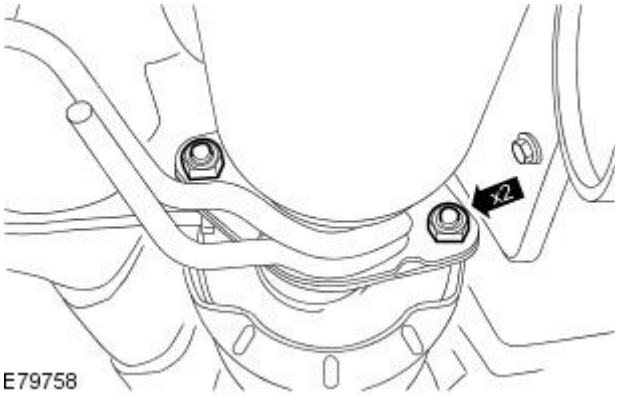

2. Tighten to 46 Nm.

- Install a new exhaust flexible pipe gasket and nuts.

Exhaust System - Front Muffler2.0L Duratorq-TDCi / 2.2L Duratorq-TDCi (110kW / 150PS) - Puma

Removal and Installation

Removal

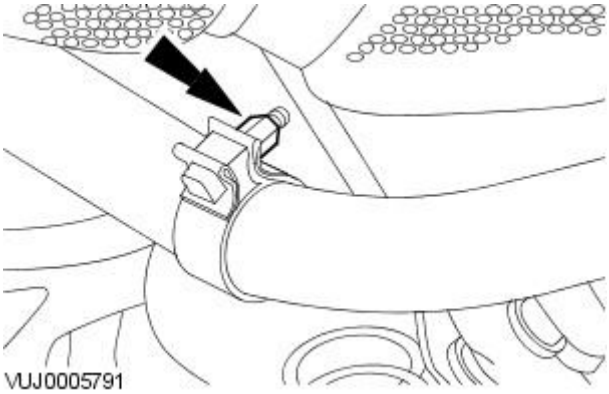

1. Raise and support the vehicle.
   For additional information, refer to: Lifting (100-02 Jacking and Lifting, Description and Operation).
2. Loosen the rear muffler exhaust clamp nut.

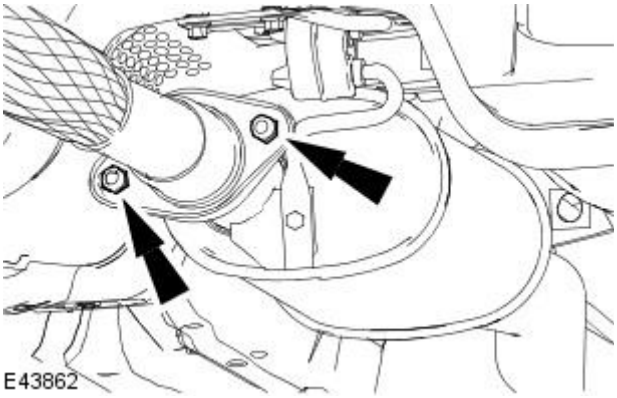

3. Remove the front muffler retaining nuts.

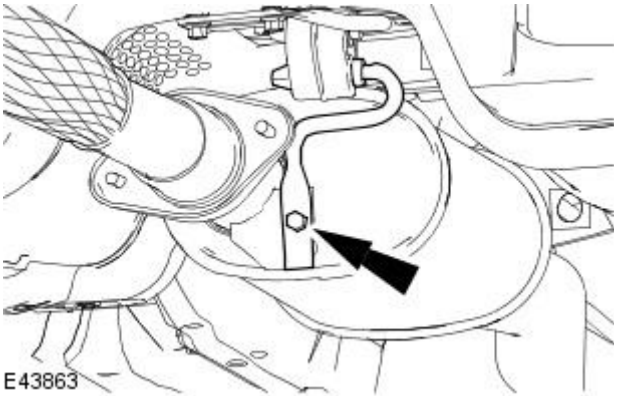

4. Detach the front muffler exhaust hanger isolator bracket.

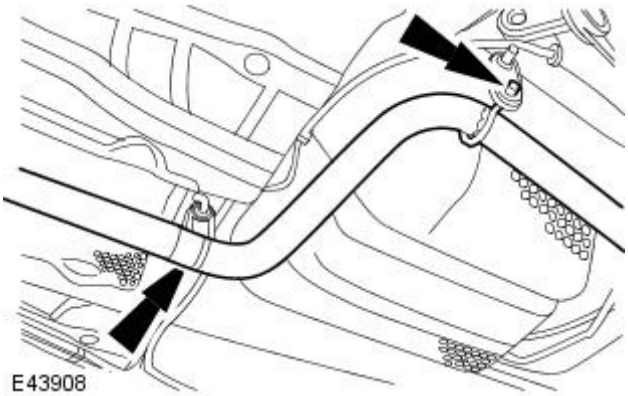

5. Remove the front muffler.
   - Detach the front muffler hanger isolators.
   - Discard the gasket.

Installation

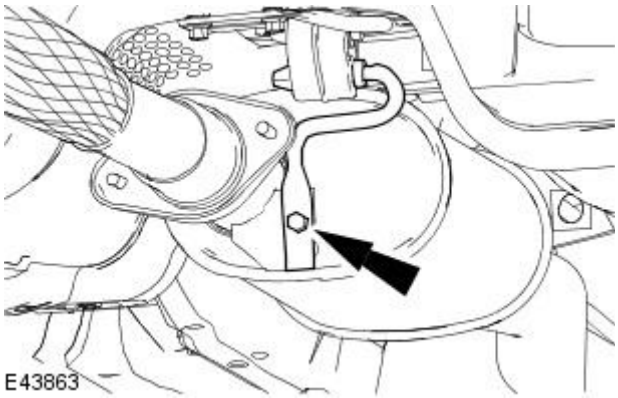

1. CAUTION: The exhaust hanger isolators are constructed of a special material. Use only the correct specification exhaust hanger isolators.

• NOTE: Check the exhaust hanger isolators for damage or fatigue. Install new exhaust hanger isolators if required.

• NOTE: Make sure the front muffler does not foul the underside of the vehicle.

• NOTE: Install a new gasket.

To install, reverse the removal procedure.

- Tighten to 25 Nm.

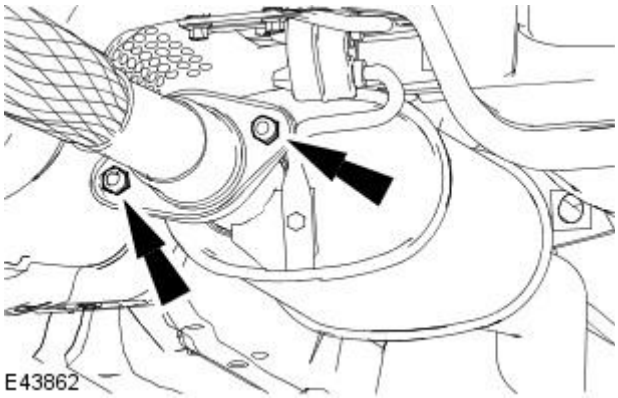

2. Tighten to 46 Nm.

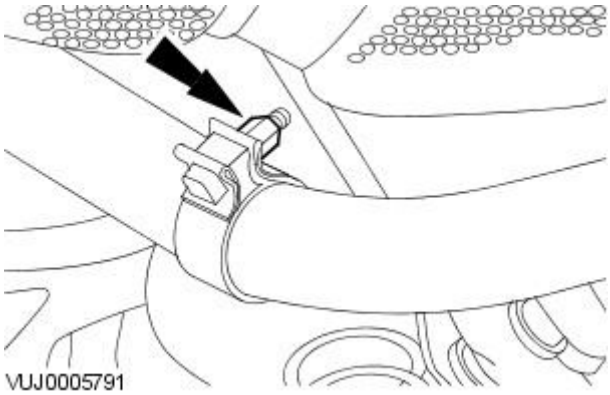

3. Tighten to 55 Nm.

Exhaust System - Front Muffler2.0L NA V6 - AJV6 / 2.5L NA V6 - AJV6 / 3.0L NA V6 - AJ27

Removal and Installation

Removal

All vehicles

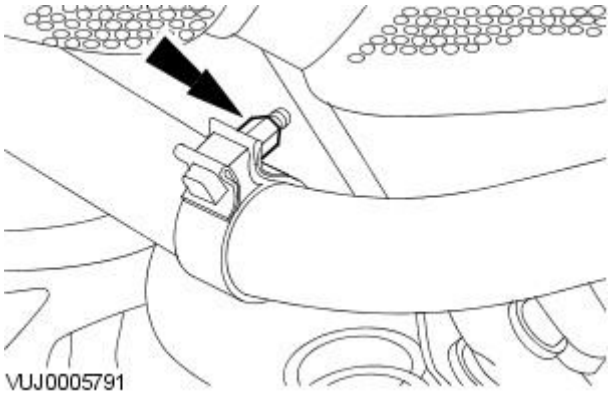

1. Raise and support the vehicle.
   For additional information, refer to Section 100-01 Identification Codes.
2. Loosen the rear muffler exhaust clamp nut.

Vehicles with 2.5L or 3.0L engine

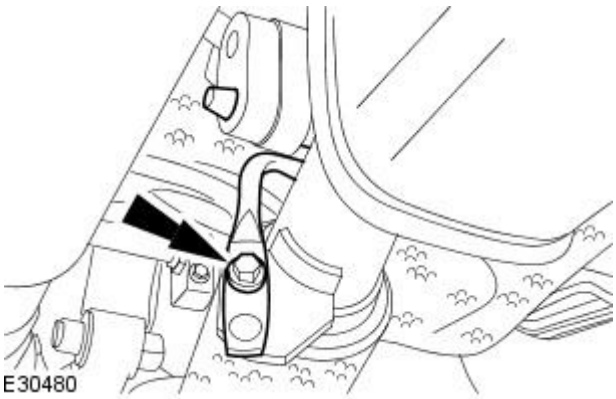

3. Detach the front muffler exhaust hanger isolator bracket.

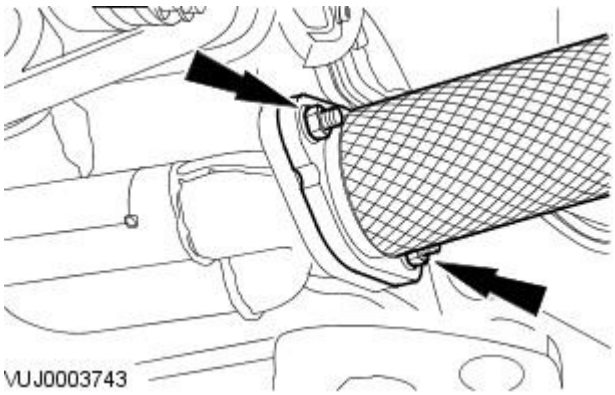

4. Remove the front muffler.
   - Remove and discard the gasket.

Vehicles with 2.0L engine

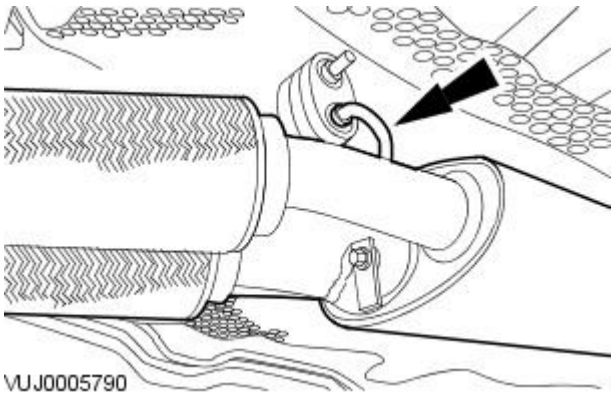

5. Detach the front muffler exhaust hanger isolator.

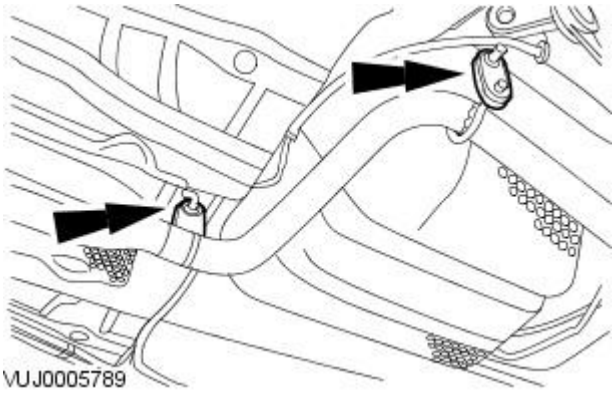

6. Detach the front muffler hanger isolators.

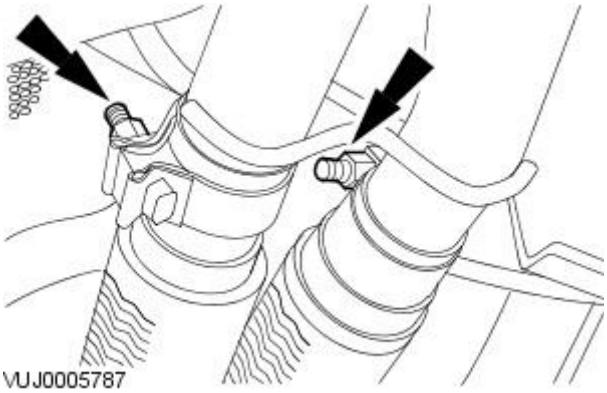

7. Remove the front muffler.

- Loosen the front muffler clamp retaining nuts.

Installation

Vehicles with 2.5L or 3.0L engine

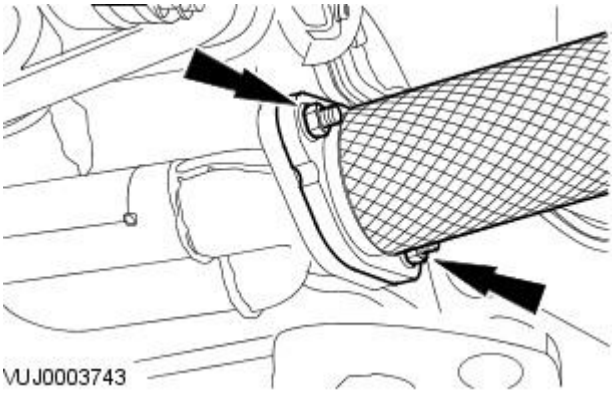

1. CAUTION: The exhaust hanger isolators are constructed of a special material. Use only the correct specification exhaust hanger isolators.

• NOTE: Check the exhaust hanger isolators for damage or fatigue. Install new exhaust hanger isolators if required.

• NOTE: Make sure the front muffler does not foul the underside of the vehicle.

• NOTE: Install a new gasket.

To install, reverse the removal procedure.

- Tighten to 55 Nm.

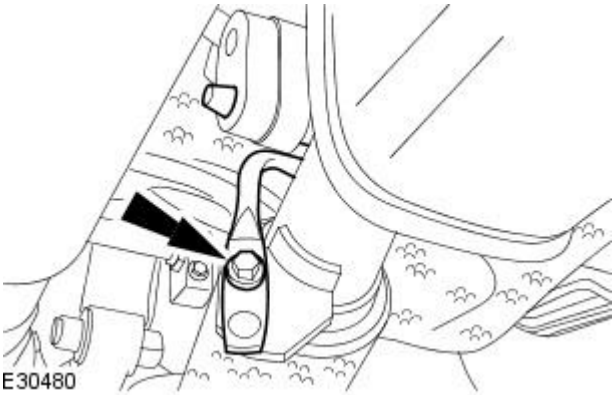

2. Tighten bolt to 25 Nm.

Vehicles with 2.0L engine

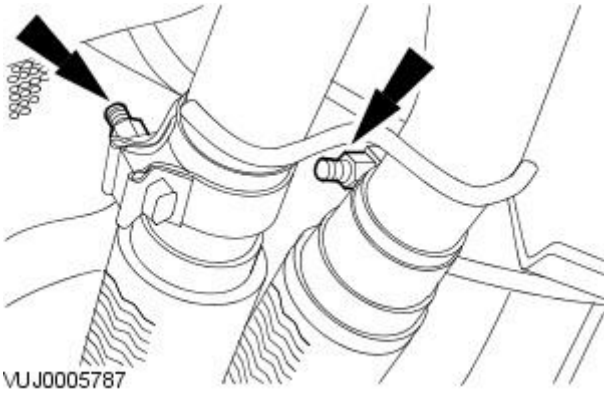

3. CAUTION: The exhaust hanger isolators are constructed of a special material. Use only the correct specification exhaust hanger isolators.

• NOTE: Check the exhaust hanger isolators for damage or fatigue. Install new exhaust hanger isolators if required.

• NOTE: Make sure the front muffler does not foul the underside of the vehicle.

To install, reverse the removal procedure.

- Tighten to 55 Nm.

All vehicles

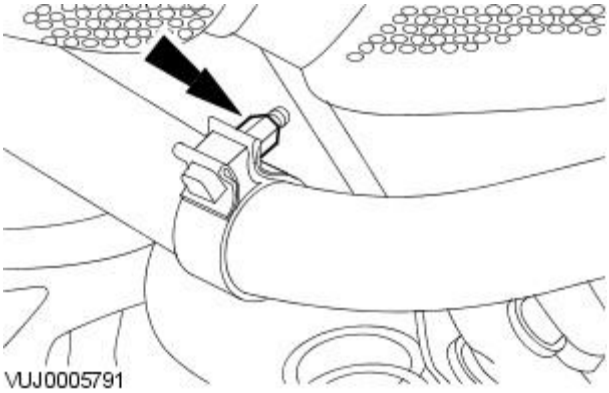

4. Tighten to 55 Nm.

Exhaust System - Muffler and Tailpipe2.0L Duratorq-TDCi / 2.2L Duratorq-TDCi (110kW / 150PS) - Puma, 2.0L

Removal and Installation

Removal

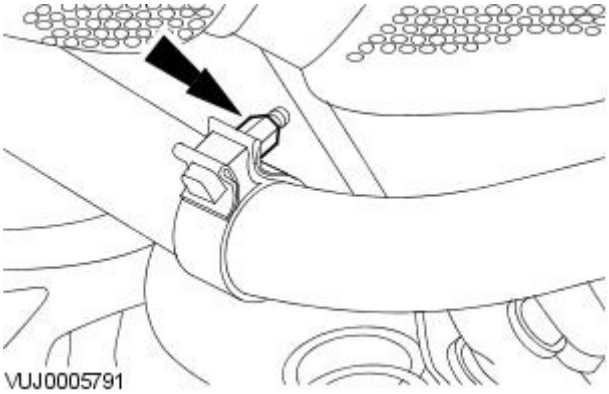

1. Raise and support the vehicle.
For additional information, refer to: Lifting (100-02 Jacking and Lifting, Description and Operation).

2. CAUTION: Before removing the rear muffler assembly, make a note of the location between the rear muffler and the rear muffler inlet pipe. Failure to install the rear muffler in the correct position could cause an acoustic vibration inside the vehicle.

Loosen the muffler and tailpipe clamp retaining nut.

3. Remove the rear muffler assembly.

- Detach the muffler and tailpipe support isolator.

Installation

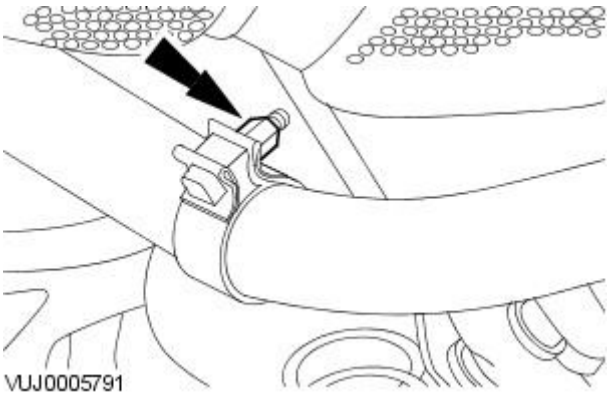

1. CAUTION: The exhaust hanger isolators are constructed of a special material. Use only the correct specification exhaust hanger isolators. Failure to follow this instruction may result in damage to the component.

• NOTE: Check the exhaust hanger isolators for damage or fatigue. Install new exhaust hanger isolators if required.

• NOTE: Install the muffler and tailpipe in the same position that was noted in the removal procedure. If installing a new rear muffler make sure that there is no torsional stress in the exhaust system, and that the exhaust system is free of the underbody of the vehicle.

To install, reverse the removal procedure.

- Tighten to 55 Nm.

Exhaust System - Muffler and Tailpipe2.5L NA V6 - AJV6 / 3.0L NA V6 - AJ27

Removal and Installation

Removal

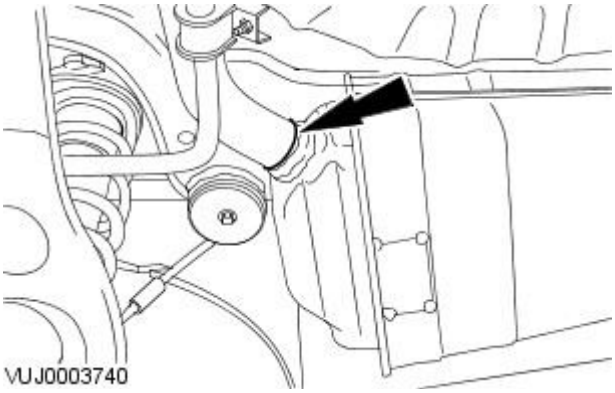

1. Raise and support the vehicle.
   For additional information, refer to: Lifting (100-02 Jacking and Lifting, Description and Operation).
2. NOTE: Right-hand shown, left-hand similar.

   Cut the rear muffler 'Y' pipe in front of the welded joint.

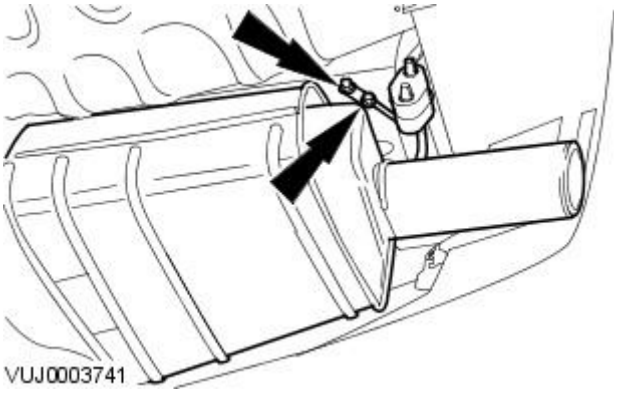

3. NOTE: Right-hand shown, left-hand similar.

   Remove the muffler and tailpipe.

   - Remove the exhaust hanger and isolator.

Installation

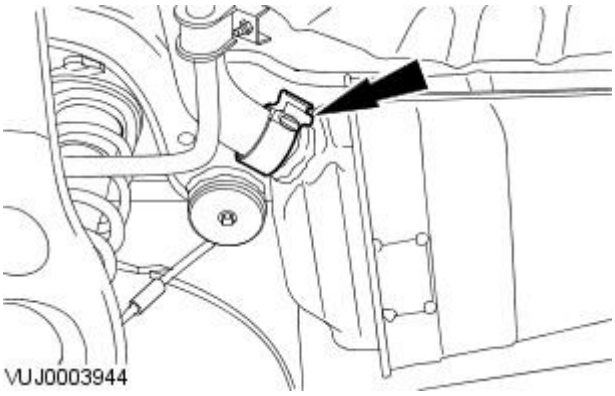

1. CAUTION: The exhaust hanger isolators are constructed of a special material. Use only the correct specification exhaust hanger isolators. Failure to follow this instruction may result in damage to the component.

   • NOTE: Check the exhaust hanger isolators for damage or fatigue. Install new exhaust hanger isolators if required.

   • NOTE: Make sure the rear muffler 'Y' pipe does not have any burrs.

   • NOTE: Make sure the muffler and tailpipe is central to the bumper aperture.

   • NOTE: Right-hand shown, left-hand similar.

   Install the muffler and tailpipe.

   - Tighten to 55 Nm.

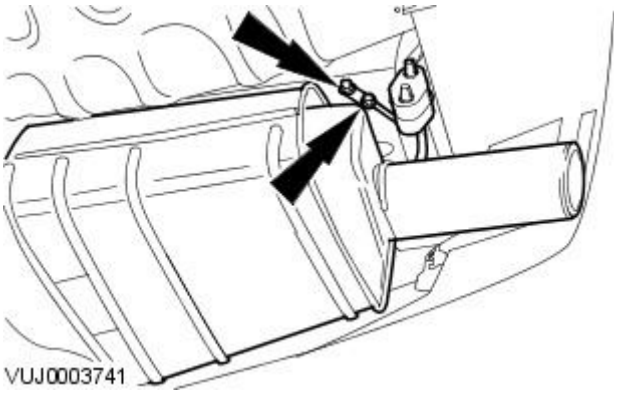

2. NOTE: Right-hand shown, left-hand similar.

   Tighten to 25 Nm.

Exhaust System - Muffler Inlet Pipe2.0L NA V6 - AJV6 / 2.5L NA V6 - AJV6 / 3.0L NA V6 - AJ27

Removal and Installation

Removal

All vehicles

1. Remove the front wheel and tire. For additional information, refer to Section 204-04 Wheels and Tires.

Vehicles with 2.5L or 3.0L engine

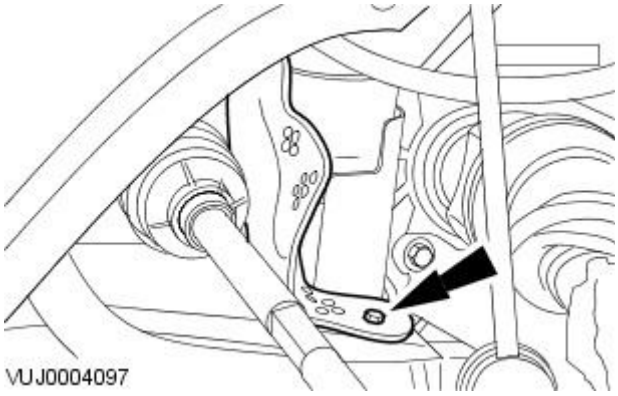

2. Detach and reposition the heat shield.

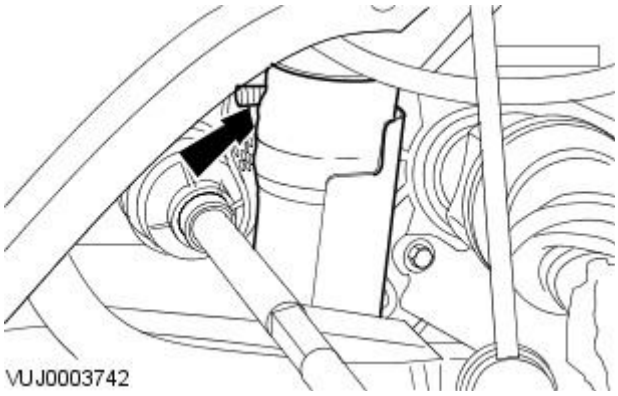

3. Loosen the muffler inlet pipe exhaust clamp nut.

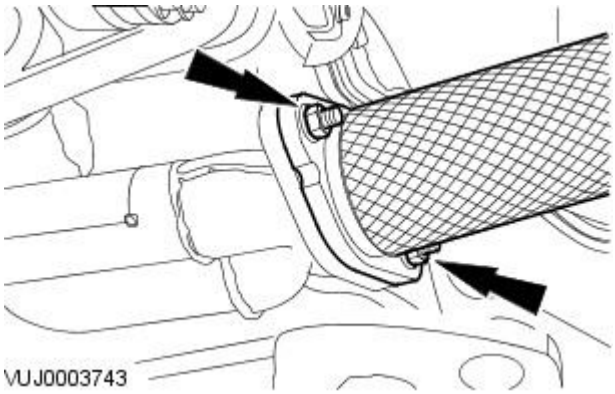

4. Detach the front muffler.
   - Remove and discard the gasket.

Vehicles with 2.0L engine

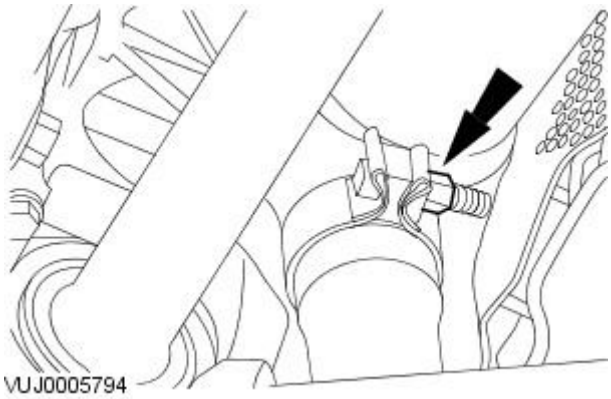

5. Loosen the muffler inlet pipe exhaust clamp nut.

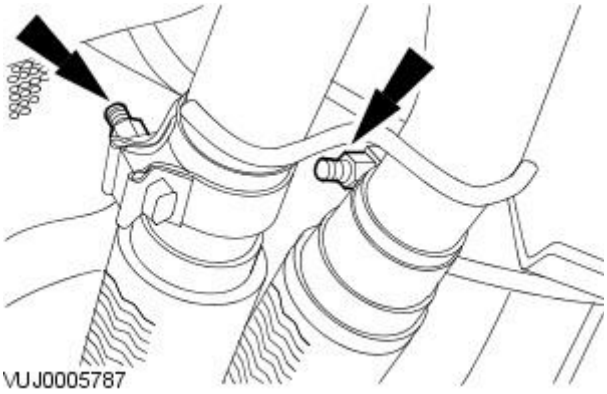

6. Detach the muffler.

- Slacken the muffler retaining clamp nuts.

All vehicles

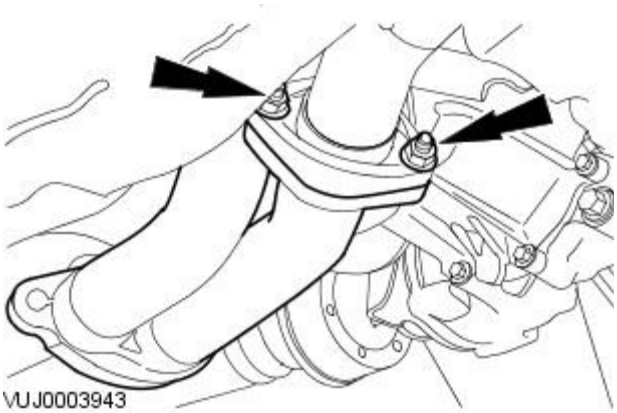

7. NOTE: 2.5L and 3.0L shown, 2.0L similar.

Remove the muffler inlet pipe.

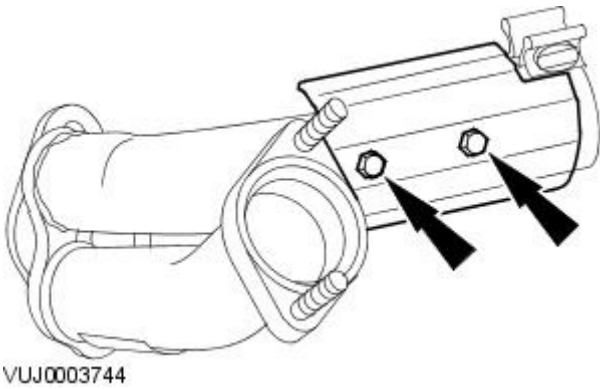

8. NOTE: 2.5L and 3.0L shown, 2.0L similar.

Remove the exhaust heat shield.

Installation

All vehicles

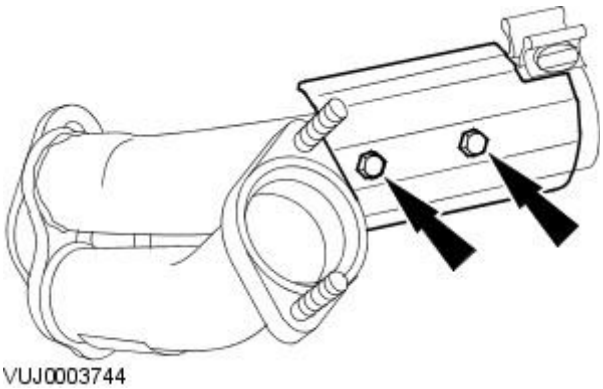

1. NOTE: 2.5L and 3.0L shown, 2.0L similar.

To install, reverse the removal procedure.

- Tighten to 10 Nm.

2. NOTE: 2.5L and 3.0L shown, 2.0L similar.

Tighten to 55 Nm.

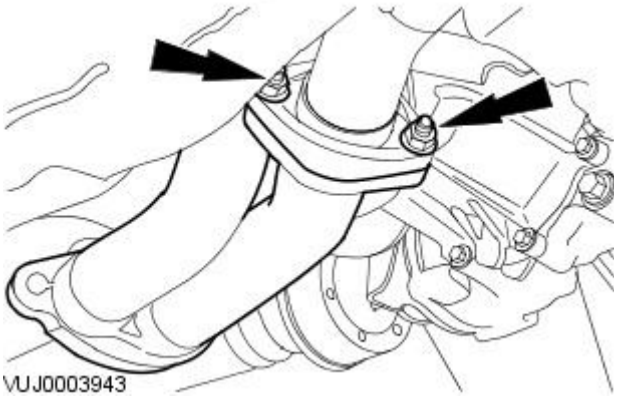

Vehicles with 2.0L engine

3. Tighten to 55 Nm.

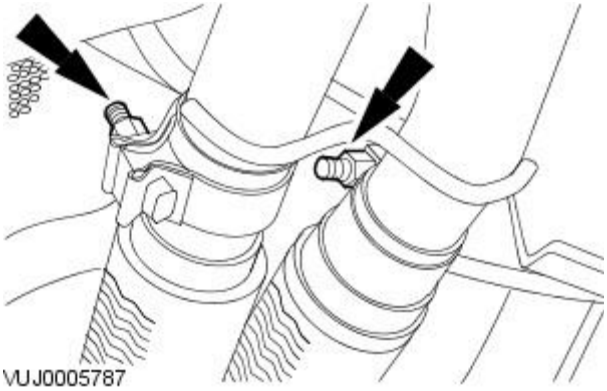

4. Tighten to 55 Nm.

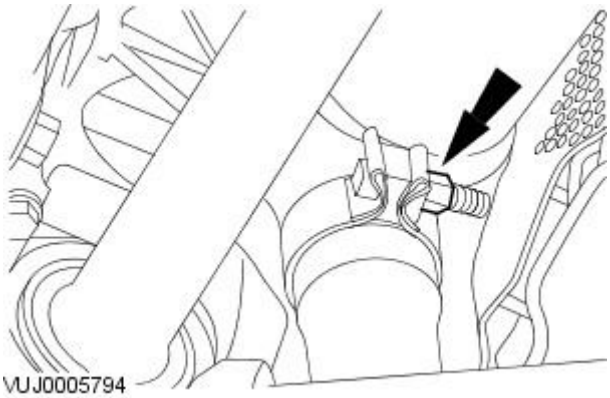

Vehicles with 2.5L or 3.0L engine

5. NOTE: Install a new gasket.

Tighten to 55 Nm.

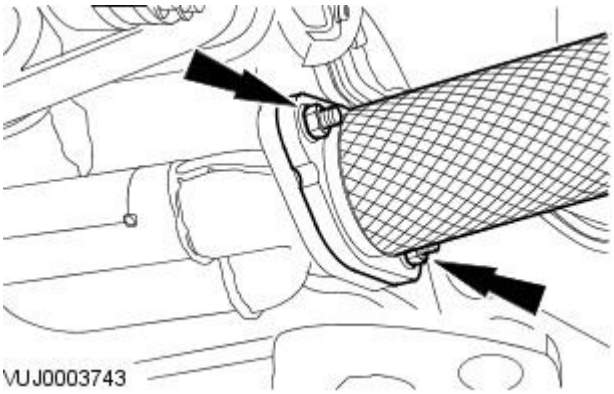

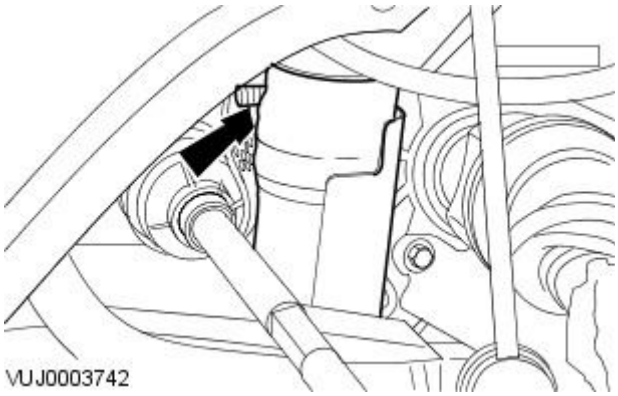

6. Tighten to 55 Nm.

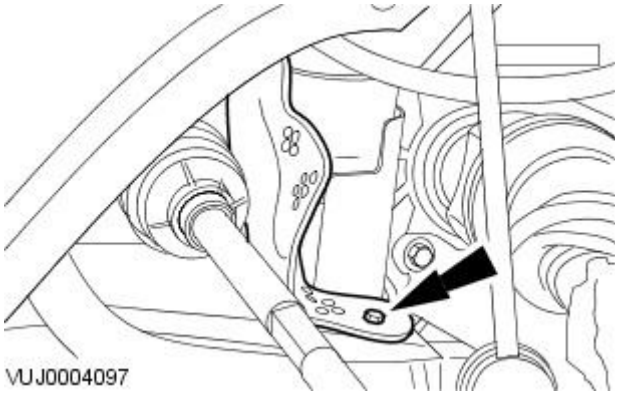

7. Tighten to 10 Nm.

Exhaust System - Muffler Inlet PipeVehicles With: Diesel Particulate Filter (DPF)

Removal and Installation

Removal

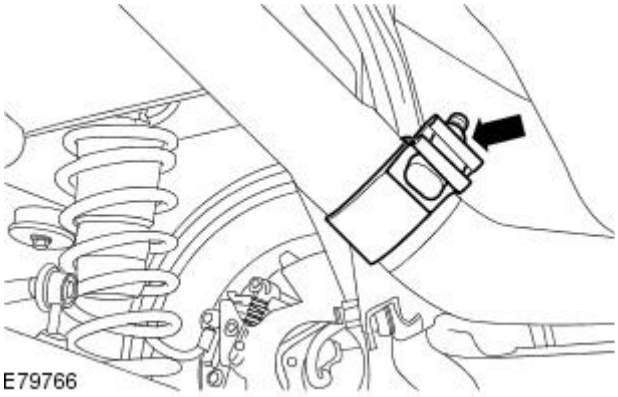

1. Raise and support the vehicle.
   For additional information, refer to: Lifting (100-02 Jacking and Lifting, Description and Operation).
2. Loosen the rear muffler exhaust clamp nut.

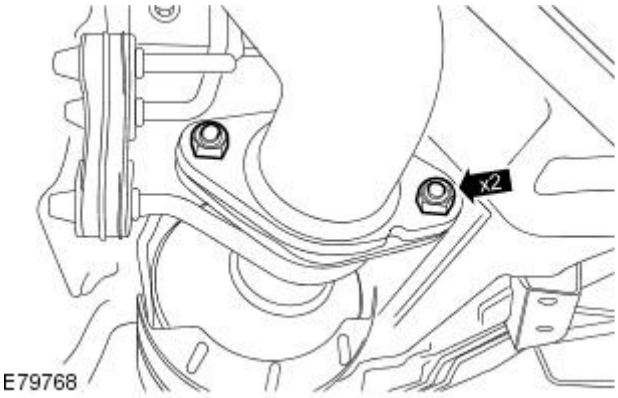

3. Remove the muffler inlet pipe to diesel particulate filter retaining nuts.

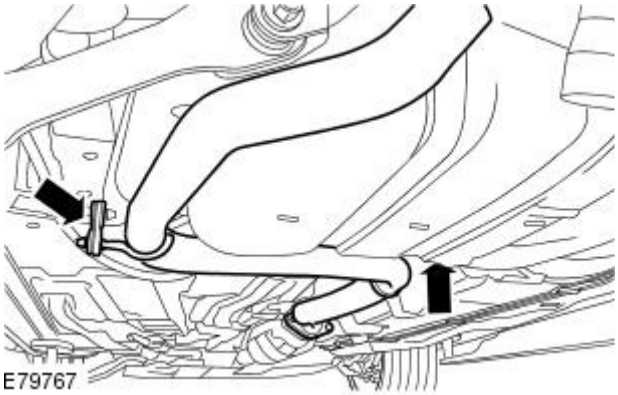

4. Remove the muffler inlet pipe.
   - Detach the muffler inlet pipe support isolators.
   - Remove and discard the gasket.

Installation

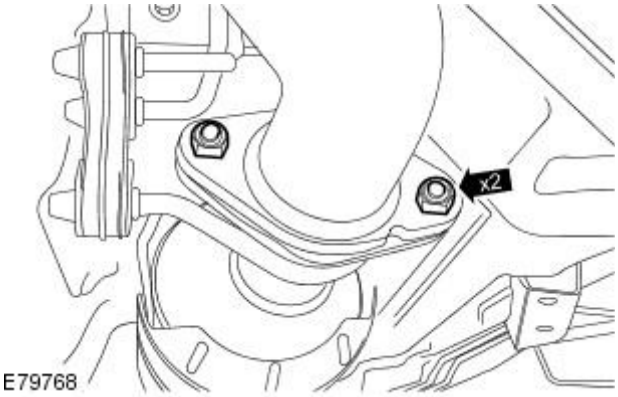

1. NOTE: Check the exhaust support isolators for damage or fatigue. Install new exhaust support isolators if required.

   To install, reverse the removal procedure.
   - Tighten to 46 Nm.
   - Install a new gasket.

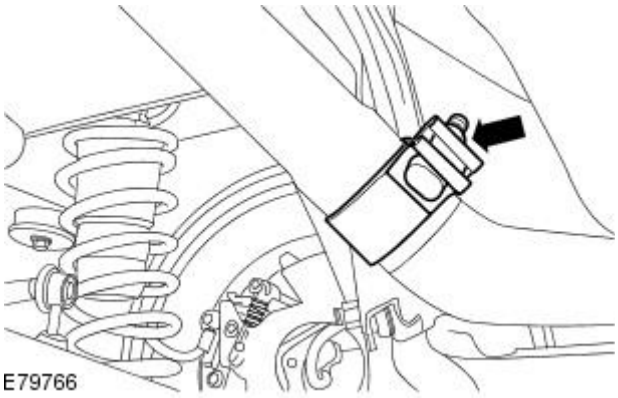

2. Tighten to 55 Nm.

Published: 11-May-2011

Fuel System - General Information -

General Specifications

Item	Specification
Fuel tank capacity	61.5 ltrs

Torque Specifications

Description	Nm	lb-ft	lb-in
Fuel tank sender unit lock rings	70	52	-

Fuel System - General Information - Fuel System

Description and Operation

Vehicles with 2.0L engine

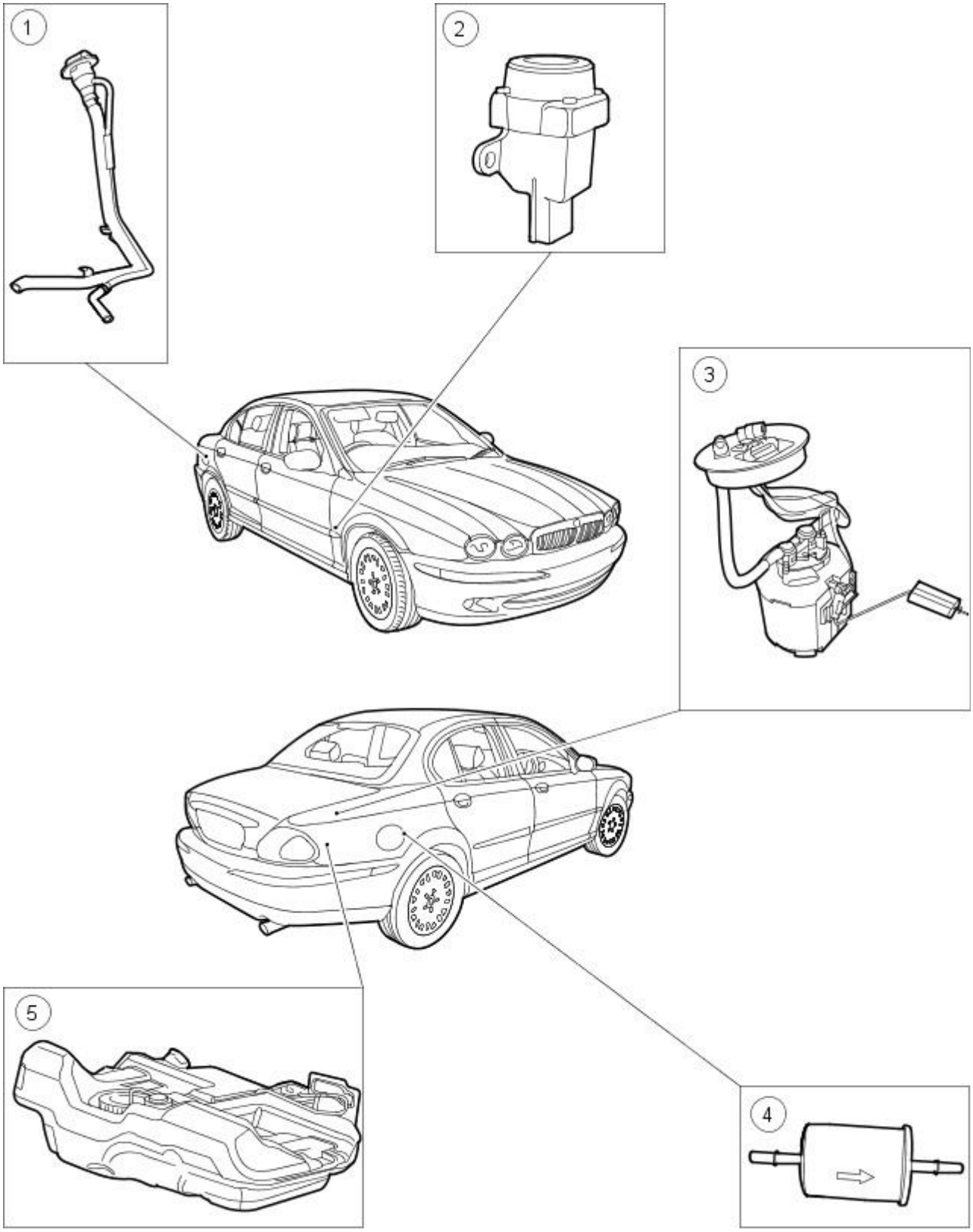

E31338

Item	Part Number	Description
1	—	Fuel tank filler pipe
2	—	Inertia fuel shutoff (IFS) switch
3	—	Fuel pump
4	—	Fuel filter
5	—	Fuel tank

The mechanical returnless fuel system utilized has the following advantages:

- Reduces the build up of fuel pressure on starting the engine
- Holds the pressure in the fuel lines to aid engine hot starts
- Smooths out pulsations and reduces fuel pump noise

The fuel tank is constructed of high density polythylene and is located underneath the vehicle below the rear passenger seat. The tank is retained by two support straps fixed to the vehicle's underbody, with the underside of the tank being protected by a fitted heatshield.

The electric turbine fuel pump, which operates in a fuel reservoir, has an integral top plate for the external pipe work and electrical connectors. The pump is secured to the fuel tank by a screw-on plastic closure ring.

Two roll over valves are connected by a hose which allows air to circulate in the tank which prevents the build up of high pressure vapor areas which may be created during fuel tank filling on gradients or when the vehicle is in motion.

CAUTION: The use of supplementary oil or fuel additives is not approved unless specified by Jaguar Cars in the form of a service communication or directive.

Fuel is pumped from the tank to the fuel rail at a constant pressure of 4.5 bar, regardless of the amount of fuel being injected into the engine. Fuel pressure is constantly maintained by the fuel pump's integral mechanical pressure regulator which returns excess fuel to the fuel tank via a T-piece positioned directly after the fuel filter.

Vehicles with 2.5L or 3.0L engine

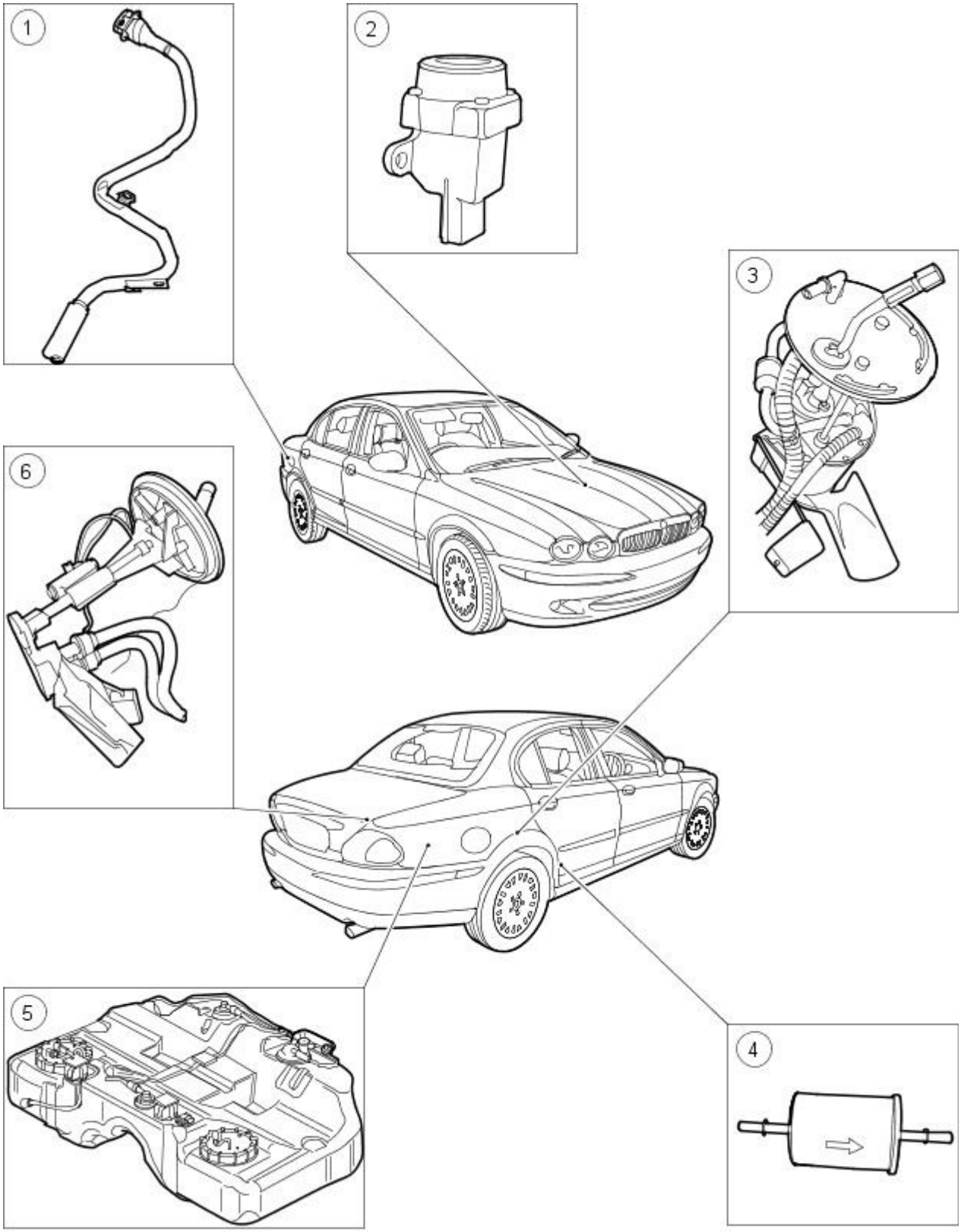

VUJ0003469

Item	Part Number	Description
1	—	Fuel tank filler pipe
2	—	Inertia fuel shutoff (IFS) switch
3	—	Fuel pump module
4	—	Fuel filter
5	—	Fuel tank

6	—	Fuel transfer pump (jet pump) module

The electronic returnless fuel system utilized has the following advantages:

- reduced fuel tank vapor.
- requires less electrical power.
- does not require a fuel return line.

The intelligence of this system is contained within the engine control module (ECM).

The ECM determines the required fuel flow and communicates this information to the fuel pump controller. The fuel pump controller has the fuel pump driver functions fully integrated into the microprocessor. The ECM calculates the frequency and determines the current required by the fuel pump to maintain the correct fuel pressure at the fuel injectors.

The fuel tank is of a saddle design which incorporates two sender units. The right-hand side houses the fuel pump module. The left-hand side houses the transfer pump (jet pump) module.

CAUTION: The use of supplementary oil or fuel additives is not approved unless specified by Jaguar Cars in the form of a service communication or directive.

Fuel is supplied at high pressure to the injectors via a fuel rail which incorporates a fuel pressure and a fuel temperature sensor. The ECM increases the fuel pressure to minimize fuel vapor formation to maintain fuel flow across the injectors. An inertia type fuel cut-off switch will cut power to the fuel pump module in the event of an accident.

Vehicles with diesel engine

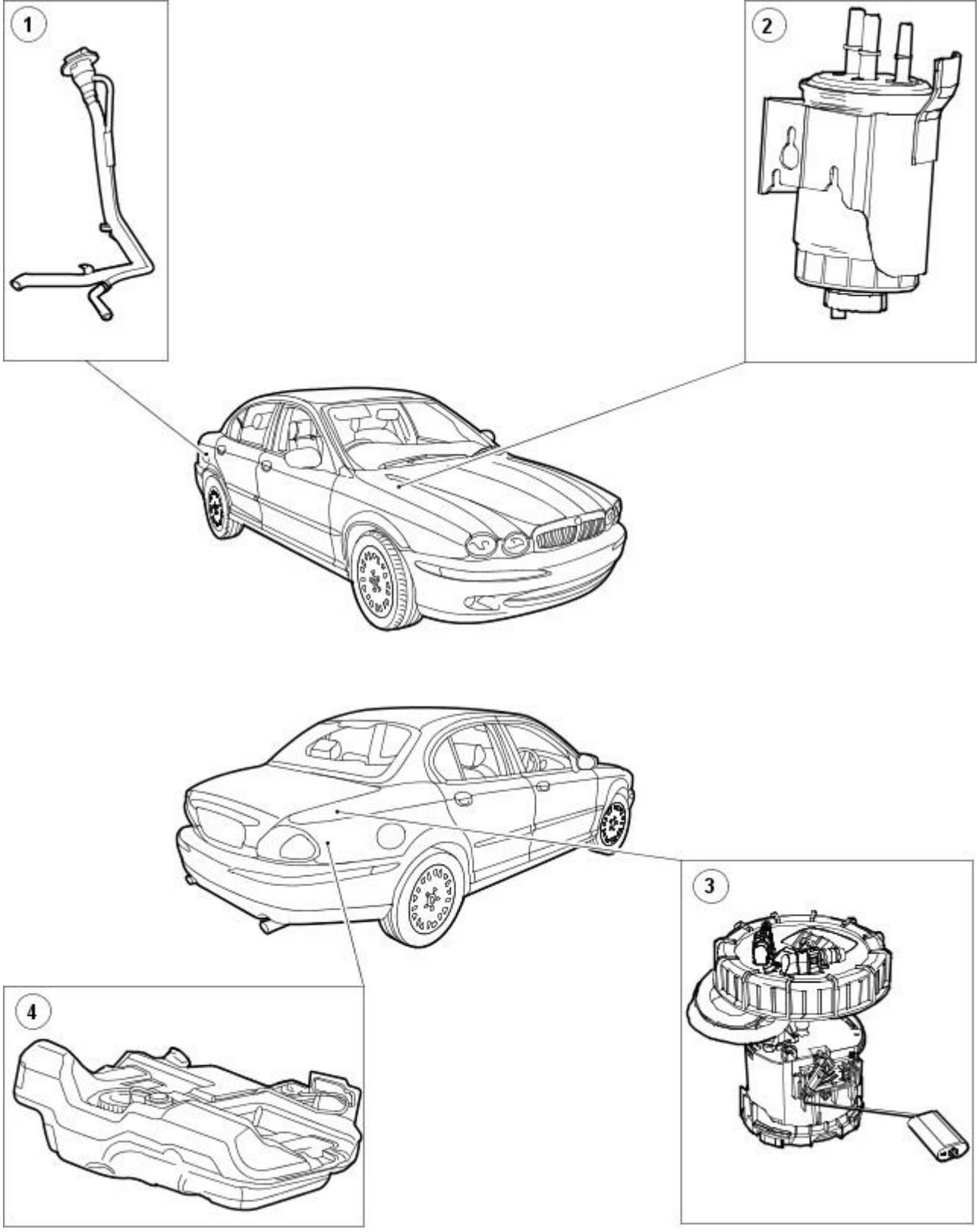

E49004

Item	Part Number	Description
1	-	Fuel tank filler pipe
2	-	Fuel filter
3	-	Sender unit
4	-	Fuel tank

The fuel tank is constructed of high density polythylene and is located underneath the vehicle below the rear passenger seat. The tank is retained by two support straps fixed to the vehicle's underbody, with the underside of the tank being protected by a fitted heatshield.

The fuel sender unit uses a resistor tile and float rod system to supply information to the instrument cluster of the fuel level. The fuel system has a run dry strategy which leaves four litres of unusable fuel in the tank. If fuel runout occurs no system priming/bleeding is required.

CAUTION: The use of supplementary oil or fuel additives is not approved unless specified by Jaguar Cars in the form of a service communication or directive.

The fuel filter is located at the top of the bulkhead on the right-hand side of the vehicle. The fuel filter incorporates a fuel pre heat function, which utilizes a ball valve operated by a bimetallic strip. When the temperature is less than 15° C (59° F), the ball valve allows the warm fuel in the fuel return system to pass back through the fuel filter to the fuel pump to improve cold running. Once the temperature exceeds 31° C (88° F) a bimetallic strip closes the ball valve in the fuel filter and all of the fuel in the fuel return system is directed back to the fuel tank.

Published: 11-May-2011

Fuel System - General Information - Fuel System

Diagnosis and Testing

1. **1.** Verify the customer concern.
2. **2.** Visually inspect for obvious signs of mechanical or electrical damage.
3. **3.** If an obvious cause for an observed or reported concern is found, correct the cause (if possible) before proceeding to the next step.
4. **4.** If the concern is not visually evident, refer to the Symptom Chart.

Symptom Chart

Symptom	Possible Sources	Action
P1233, P1235, —Fuel Pump Primary Circuit Failure	* Damaged harness. * Connector loose or corroded. * Connector pin(s) bent or tracking between connections. * Damaged GROUND. * 'Popped' inertia switch.	* GO to Pinpoint Test A.
B1201, P0460, —Fuel Sender Circuit Failure	* Worn or damaged sensor tracks. * Damaged Harness. * Connector loose or corroded. * Connector pin(s) bent or tracking between connections. * Fuel level sensor to instrument cluster circuits intermittent short or open circuit or high resistance. * Fuel level sensor failure. * Instrument cluster fault (incorrect fuel level data).	* GO to Pinpoint Test B.

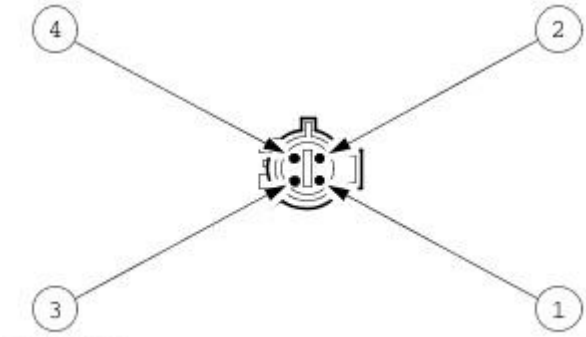

VUJ0002070

Fuel Pump Harness Connector

Pin Number	Circuit Function	Circuit Color
1	Fuel level sensor signal supply	Yellow/white
2	Fuel pump voltage supply	Pink/black
3	Fuel level sensor GROUND supply	Pink/orange
4	Fuel pump GROUND supply	Black

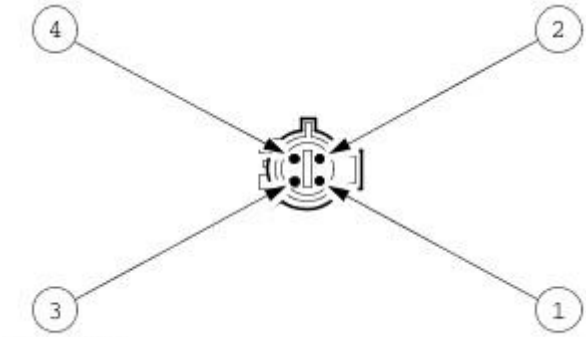

VUJ0002070

Transfer Pump Fuel Level Sensor Harness Connector

Pin Number	Circuit Function	Circuit Color
1	Fuel level sensor signal supply	Yellow/white
3	Fuel level sensor GROUND supply	Pink/orange

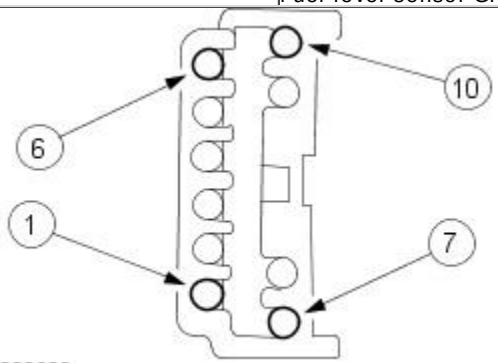

VUJ0003688

Fuel Pump Controller Harness Connector

Pin Number	Circuit Function	Circuit Color
1	engine control module (ECM) control input	Brown

Pin Number	Circuit Function	Circuit Color
2	Ground	Black
3	Fuel pump ground	Yellow
4	Throttle screen	Black/green
5	Fuel pump screen	White
7	ECM monitor output	White
9	Battery positive	Brown/green
10	Fuel pump positive	Red

PINPOINT TEST A : P1233, P1235—FUEL PUMP PRIMARY CIRCUIT FAILURE	
TEST CONDITIONS	**DETAILS/RESULTS/ACTIONS**
A1: CHECK THE POSITIVE SUPPLY TO THE FUEL PUMP	
	1 Switch the ignition to the OFF position.
	2 Disconnect the fuel pump electrical connector FT002.
	3 Switch the ignition to the RUN position.
	4 Measure the pulse width modulation voltage between the fuel pump electrical connector FT002 pin 2, (KB) and GROUND.
	Is there a 1 second, 12 volts voltage signal after the ignition is switched on? **Yes** GO to A2. **No** GO to A5.
A2: CHECK THE GROUND SUPPLY TO THE FUEL PUMP	
	1 Switch the ignition to the OFF position.
	2 Measure the resistance between the fuel pump electrical connector FT002 pin 4, (B) and GROUND.
	Is the resistance less than 0.5 Ohm? **Yes** INSTALL a new fuel pump. CLEAR DTC. TEST the system for normal operation. **No** GO to A7.
A3: CHECK THE POSITIVE SUPPLY TO THE FUEL PUMP CONTROLLER	
	1 Switch the ignition to the RUN position.
	2 Measure the voltage at the fuel pump controller CA105 pin 9.
	Is the voltage less than 10.5 Volts? **Yes** GO to A4. **No** GO to A10.
A4: CHECK THE FUEL PUMP CONTROLLER VOLTAGE SUPPLY FUSE	
	1 Measure the voltage at the fuel pump controller supply fuse.
	Is the voltage less than 10.5 Volts? **Yes** GO to A12. **No** REPAIR the circuit between the central electrical junction box (CEJB) and the fuel pump controller. CLEAR DTC. TEST the system for normal operation.
A5: CHECK THE VOLTAGE OUTPUT AT THE FUEL PUMP CONTROLLER	
	1 Switch the ignition to the OFF position.
	2 Disconnect the fuel pump controller electrical connector CA105.
	3 Switch the ignition to the RUN position.
	4 Measure the pulse width modulation voltage between the fuel pump controller electrical connector CA105 pin 10 and GROUND.
	Is there a 1 second 12 volts voltage signal after the ignition is switched on? **Yes** GO to A6. . **No** GO to A3. .
A6: CHECK THE CONTINUITY BETWEEN THE FUEL PUMP CONTROLLER AND THE FUEL PUMP	
	1 Measure the resistance between the fuel pump controller connector CA105 pin 10, (R) and fuel pump electrical connector FT002 pin 2, (KB).
	Is the resistance less than 0.5 Ohm? **Yes** INSTALL a new fuel pump controller. CLEAR DTC. TEST the system for normal operation. **No** REPAIR the circuit between the fuel pump controller CA105 pin 10, (R) and the fuel pump electrical connector FT002 pin 2, (KB). CLEAR DTC. TEST the system for normal operation.
A7: CHECK THE GROUND SUPPLY AT THE FUEL PUMP CONTROLLER	
	1 Switch the ignition to the OFF position.
	2 Measure the resistance between the fuel pump controller electrical connector CA105 pin 3, (Y) and GROUND.
	Is the resistance less than 0.5 Ohm? **Yes** GO to A8. . **No** GO to A9. .
A8: CHECK THE CONTINUITY BETWEEN THE FUEL PUMP AND THE FUEL PUMP CONTROLLER	
	1 Measure the resistance between the fuel pump connector FT002 pin 4, (B) and the fuel pump controller connector CA105 pin 3 (Y).
	Is the resistance less than 0.5 Ohms? **Yes** GO to A9. **No** REPAIR the circuit between the fuel pump FT002 pin 4, (B) and the fuel pump controller CA105 pin 3, (Y). CLEAR DTC. TEST the system for normal operation.
A9: CHECK THE GROUND SUPPLY TO THE FUEL PUMP CONTROLLER	
	1 Switch the ignition to the OFF position.

	2 Measure the resistance between the fuel pump controller CA105 pin 2, and GROUND.
	Is the resistance less than 0.5 Ohm? **Yes** REPAIR the circuit between the fuel pump controller CA105 pin 2, (B) and GROUND. CLEAR DTC. TEST the system for normal operation. **No** INSTALL a new fuel pump controller. CLEAR DTC. TEST the system for normal operation.
A10: CHECK THE SWITCHABLE SUPPLY TO THE FUEL PUMP CONTROLLER	
	1 Switch the ignition to the OFF position.
	2 Disconnect the fuel pump controller electrical connector CA105.
	3 Switch the ignition to the RUN position.
	4 Measure the pulse width modulation frequency between the fuel pump controller electrical connector CA105 pin 1, (N) and GROUND.
	Is the frequency 250 Hz, 1-50% duty? **Yes** INSTALL a new fuel pump controller. CLEAR DTC. TEST the system for normal operation. **No** GO to A11.
A11: CHECK THE CONTINUITY BETWEEN THE FUEL PUMP CONTROLLER AND THE ECM	
	1 Switch the ignition to the OFF position.
	2 Disconnect the ECM electrical connector EN016.
	3 Measure the resistance between the fuel pump controller electrical connector CA105 pin 1, (N) and the ECM electrical connector EN106 pin 27, (N).
	Is the resistance less than 0.5 Ohm? **Yes** INSTALL a new ECM. CLEAR DTC. TEST the system for normal operation. **No** REPAIR the circuit between the fuel pump controller electrical connector CA105 pin 1, (N) and the ECM electrical connector EN106 pin 27, (N). CLEAR DTC. TEST the system for normal operation.
A12: CHECK THE POSITIVE SUPPLY TO THE IGNITION RELAY	
	1 Switch the ignition to the OFF position.
	2 Disconnect the central electrical junction box (CEJB) electrical connector IP003.
	3 Switch the ignition to the RUN position.
	4 Measure the voltage between the CEJB electrical connector IP003 pin 1, (GU) and GROUND.
	Is the voltage less than 10.5 Volts? **Yes** GO to A13. **No** INSTALL a new ignition relay R18. CLEAR DTC. TEST the system for normal operation.
A13: CHECK THE POSITIVE SUPPLY TO THE INERTIA SWITCH	
	1 Switch the ignition to the OFF position.
	2 Disconnect the inertia switch electrical connector IP132.
	3 Switch the ignition to the RUN position.
	4 Measure the voltage between the inertia switch electrical connector IP132 pin 3, (GO) and GROUND.
	Is the voltage less than 10.5 Volts? **Yes** GO to A14. **No** GO to A15.
A14: CHECK THE INERTIA SWITCH VOLTAGE SUPPLY AT THE IGNITION SWITCH	
	1 Switch the ignition to the OFF position.
	2 Remove the ignition switch electrical connector IP018.
	3 Switch the ignition to the RUN position.
	4 Measure the voltage between the ignition switch electrical connector IP018 pin 1 and GROUND.
	Is the voltage less than 10.5 Volts? **Yes** INSTALL a new ignition switch. CLEAR DTC. TEST the system for normal operation. **No** REPAIR the circuit between the ignition switch and the inertia switch. CLEAR DTC. TEST system for normal operation.
A15: CHECK THE CONTINUITY BETWEEN THE CEJB AND THE INERTIA SWITCH	
	1 Switch the ignition switch to the OFF position.
	2 Measure the resistance between the CEJB electrical connector IP003 pin 1, (GU) and the inertia switch electrical connector IP132 pin 1, (GU).
	Is the resistance less than 0.5 Ohm? **Yes** INSTALL a new inertia switch. CLEAR DTC. TEST the system for normal operation. **No** REPAIR the circuit between the CEJB electrical connector IP003 pin 1, (GU) and the inertia switch electrical connector IP132 pin 1, (GU). CLEAR DTC. TEST the system for normal operation.

PINPOINT TEST B : B1201, P0460—FUEL SENDER CIRCUIT FAILURE

TEST CONDITIONS	DETAILS/RESULTS/ACTIONS
B1: CHECK THE VOLTAGE SUPPLY TO THE FUEL TANK ELECTRICAL CONNECTOR	
	1 Switch the ignition to the OFF position.
	2 Disconnect the fuel tank electrical connector CA005.
	3 Switch the ignition to the RUN position.
	4 Measure the voltage at the fuel tank electrical connector between: • CA005 pin 1, (WU) and GROUND • CA005 pin 2, (WB) and GROUND

	Is the voltage greater than 10.5 Volts? **Yes** GO to B2. **No** GO to B3.
B2: CHECK THE GROUND SUPPLY TO THE FUEL TANK ELECTRICAL CONNECTOR	
	1 Switch the ignition to the OFF position.
	2 Measure the resistance at the fuel tank electrical connector between CA005 pin 3, (B) and GROUND.
	Is the resistance less than 0.5 Ohms? **Yes** GO to B4. **No** GO to B5.
B3: CHECK THE VOLTAGE SUPPLY FROM THE INSTRUMENT CLUSTER	
	1 Switch the ignition to the OFF position.
	2 Disconnect the instrument cluster electrical connector IP010.
	3 Switch the ignition switch to the RUN position.
	4 Measure the voltage at the instrument cluster connector between: ● IP010 pin 8 and GROUND ● IP010 pin 7 and GROUND
	Is the voltage greater than 10.5 Volts? **Yes** REPAIR the relevant circuit. CLEAR DTC. TEST the system for normal operation. **No** INSTALL a new instrument cluster. CLEAR DTC. TEST the system for normal operation.
B4: CHECK THE RESISTANCE AT THE FUEL LEVEL SENSORS	
	1 Remove the fuel tank. For additional information, refer to Section 310-01 Fuel Tank and Lines.
	2 Disconnect the fuel sensor electrical connectors: ● FT002 ● FT003
	3 Measure the resistance between the sensor electrical connectors: ● FT002 pin 1 and FT002 pin 3 ● FT003 pin 1 and FT003 pin 3
	Is the resistance between 16 and 160 Ohms? **Yes** REPAIR the relevant circuit. CLEAR DTC. TEST the system for normal operation. **No** INSTALL the relevant new fuel level sensor. CLEAR DTC. TEST the system for normal operation.
B5: CHECK THE GROUND SUPPLY FROM THE INSTRUMENT CLUSTER	
	1 Disconnect the instrument cluster electrical connector IP010.
	2 Measure the resistance at the instrument cluster between IP010 pin 9 and GROUND.
	Is the resistance less than 0.5 Ohm? **Yes** REPAIR the circuit between the instrument cluster IP010 pin 9, (B) and the fuel tank electrical connector CA005 pin 3, (B). CLEAR DTC. TEST the system for normal operation. **No** INSTALL a new instrument cluster. CLEAR DTC. TEST the system for normal operation.

Fuel System - General Information - Fuel System Pressure Check

General Procedures

• NOTE: This procedure is for the installation of the adaptor into the fuel line due to the removal of the schraeder valve from the fuel line.

1. WARNINGS:

Place the vehicle in a quarantined area and arrange "No Smoking/Petrol Fumes" signs about the vehicle.

Before any work is carried out on the fuel system, ground the vehicle to earth and maintain the ground connection until the work is complete.

Do not smoke or carry lighted tobacco or open flame of any type when working on or near any fuel related components. Highly flammable vapors are always present and may ignite. Failure to follow these instructions may result in personal injury.

Do not carry or operate cellular phones when working on or near any fuel related components. Highly flammable vapors are always present and may ignite. Failure to follow these instructions may result in personal injury.

The fuel system remains pressurized for a long time after the ignition is switched off. The fuel pressure must be relieved before attempting any repairs. Failure to follow these instructions may result in personal injury.

This procedure involves fuel handling. Be prepared for fuel spillage at all times and always observe fuel handling precautions. Failure to follow these instructions may result in personal injury.

After carrying out repairs, the fuel system must be checked visually for leaks. Failure to follow these instructions may result in personal injury.

Disconnect the battery ground cable.
For additional information, refer to: Battery Disconnect and Connect (414-01 Battery, Mounting and Cables, General Procedures).

2. Remove the engine cover.

3. Detach the power steering fluid reservoir and reposition.

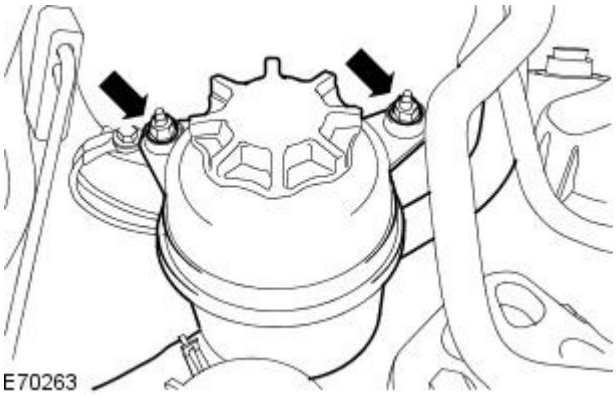

4. Disconnect the fuel rail feed pipe.
For additional information, refer to: Spring Lock Couplings (310-00 Fuel System - General Information, General Procedures).

5. NOTE: Make sure the special tool is fully seated to the fuel pipe connections.

Install the special tool.

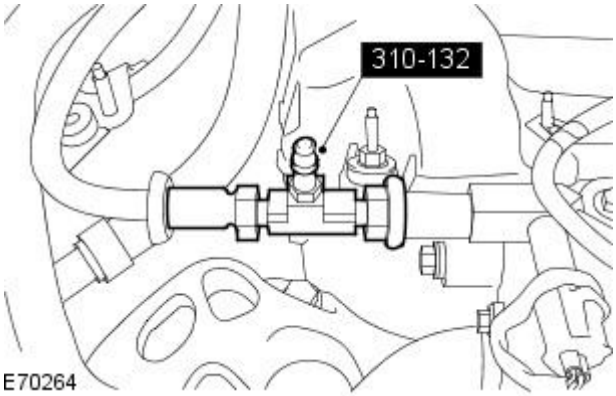

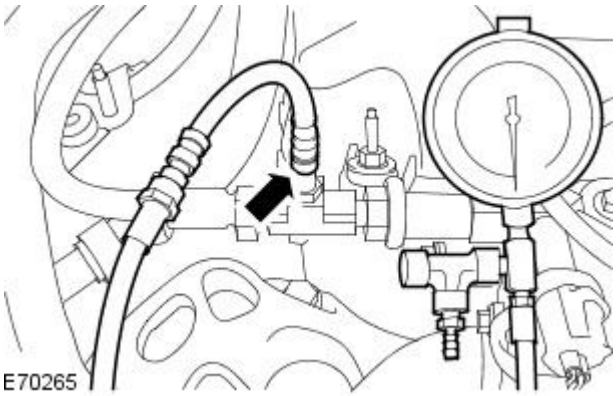

6. Install the fuel pressure gauge.

7. Connect the battery ground cable.
   For additional information, refer to: Battery Connect (414-01 Battery, Mounting and Cables, General Procedures).

8. Carry out the fuel system pressure check.
   For additional information, refer to: Fuel Charging and Controls - 2.0L NA V6 - AJV6 (303-04A Fuel Charging and Controls - 2.0L NA V6 - AJV6/2.5L NA V6 - AJV6/3.0L NA V6 - AJ27, Diagnosis and Testing).

Fuel System - General Information - Fuel System Pressure Release

General Procedures

Release

1. WARNINGS:

Do not smoke, carry lighted tobacco or an open flame of any type when working on or near any fuel related components. Highly flammable vapors are always present and may ignite. Failure to follow these instructions may result in personal injury.

The fuel system remains pressurized for a long time after the ignition is switched off. The fuel pressure must be released before attempting any repairs. Failure to follow this instruction may result in personal injury.

Remove the fuel pump fuse.

2. Start the engine and allow to idle until the engine stalls.

3. Crank the engine for approximately five seconds to make sure the fuel injection supply manifold pressure has been released.

4. Install the fuel pump fuse.

Fuel System - General Information - Fuel Tank Draining2.0L Duratorq-TDCi / 2.2L Duratorq-TDCi (110kW / 150PS) - Puma

General Procedures

Special Tool(s)	
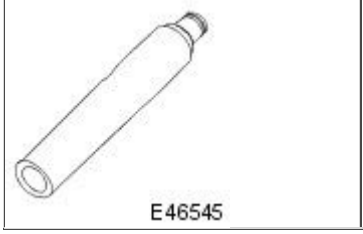 E46545	Fuel supply line adaptor 310-131

1. WARNINGS:

Place the vehicle in a quarantined area and arrange **No Smoking** signs about the vehicle.

Before any work is carried out on the fuel system, ground the vehicle to earth and maintain the ground connection until the work is complete.

Do not smoke or carry lighted tobacco or open flame of any type when working on or near any fuel related components. Highly flammable vapors are always present and may ignite. Failure to follow these instructions may result in personal injury.

Do not carry or operate cellular phones when working on or near any fuel related components. Highly flammable vapors are always present and may ignite. Failure to follow these instructions may result in personal injury.

This procedure involves fuel handling. Be prepared for fuel spillage at all times and always observe fuel handling precautions. Failure to follow these instructions may result in personal injury.

After carrying out repairs, the fuel system must be checked visually for leaks. Failure to follow these instructions may result in personal injury.

Disconnect the battery ground cable.
For additional information, refer to: Battery Disconnect and Connect (414-01 Battery, Mounting and Cables, General Procedures).

2. Raise and support the vehicle.
For additional information, refer to: Lifting (100-02 Jacking and Lifting, Description and Operation).

3. Disconnect the supply line.

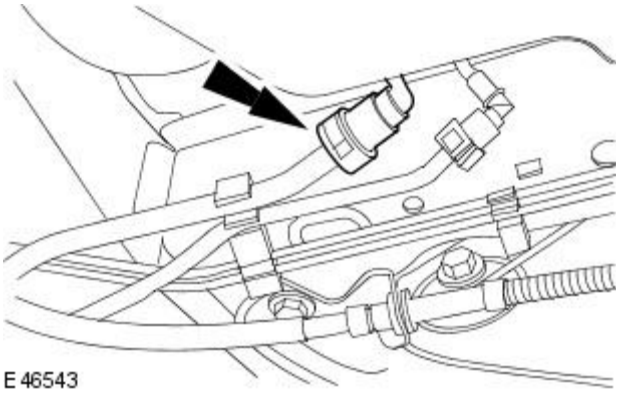

E46543

4. Install the special tool to the fuel supply line.

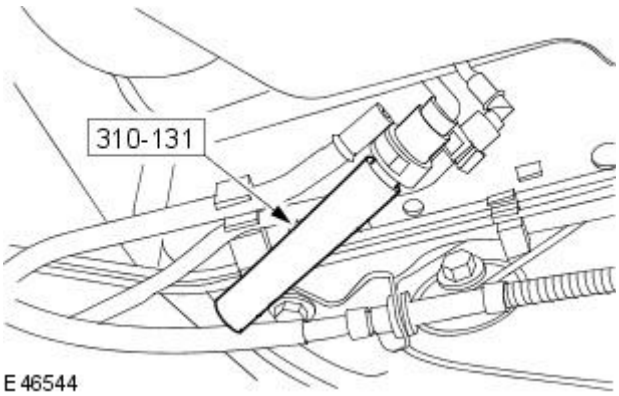

E46544

5. Using suitable draining equipment, connect the draining equipment to the special tool and drain the fuel tank. Follow the manufactures operating instructions.

Fuel System - General Information - Fuel Tank Draining2.0L NA V6 - AJV6 / 2.5L NA V6 - AJV6 / 3.0L NA V6 - AJ27

General Procedures

Special Tool(s)	
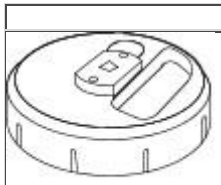	Remove/Refit fuel pump/sender locking nut 310-072A

2.0L vehicle

1. WARNINGS:

Place the vehicle in a quarantined area and arrange "No Smoking/Petrol Fumes" signs about the vehicle.

Before any work is carried out on the fuel system, ground the vehicle to earth and maintain the ground connection until the work is complete.

Do not smoke or carry lighted tobacco or open flame of any type when working on or near any fuel related components. Highly flammable vapors are always present and may ignite. Failure to follow these instructions may result in personal injury.

Do not carry or operate cellular phones when working on or near any fuel related components. Highly flammable vapors are always present and may ignite. Failure to follow these instructions may result in personal injury.

This procedure involves fuel handling. Be prepared for fuel spillage at all times and always observe fuel handling precautions. Failure to follow these instructions may result in personal injury.

After carrying out repairs, the fuel system must be checked visually for leaks. Failure to follow these instructions may result in personal injury.

Disconnect the battery ground cable. For additional information, refer to Section 414-01 Battery, Mounting and Cables.

2. Remove the fuel filler cap.

3. Using suitable draining equipment, drain the fuel tank. Follow the manufactures operating instructions.

2.5L and 3.0L vehicles

1. WARNINGS:

Place the vehicle in a quarantined area and arrange "No Smoking/Petrol Fumes" signs about the vehicle.

Before any work is carried out on the fuel system, ground the vehicle to earth and maintain the ground connection until the work is complete.

The fuel tank on the 2.5L and 3.0L vehicles can not be drained in vehicle. Due to the heavy weight, make sure that the fuel tank is securely attached to the lowering equipment when removing.

Do not smoke or carry lighted tobacco or open flame of any type when working on or near any fuel related components. Highly flammable vapors are always present and may ignite. Failure to follow these instructions may result in personal injury.

Do not carry or operate cellular phones when working on or near any fuel related components. Highly flammable vapors are always present and may ignite. Failure to follow these instructions may result in personal injury.

This procedure involves fuel handling. Be prepared for fuel spillage at all times and always observe fuel handling precautions. Failure to follow these instructions may result in personal injury.

After carrying out repairs, the fuel system must be checked visually for leaks. Failure to follow these instructions may result in personal injury.

Disconnect the battery ground cable. For additional information, refer to Section 414-01 Battery, Mounting and Cables.

2. Remove the fuel tank. For additional information, refer to Section 310-01 Fuel Tank and Lines.

3. Disconnect the electrical connector.

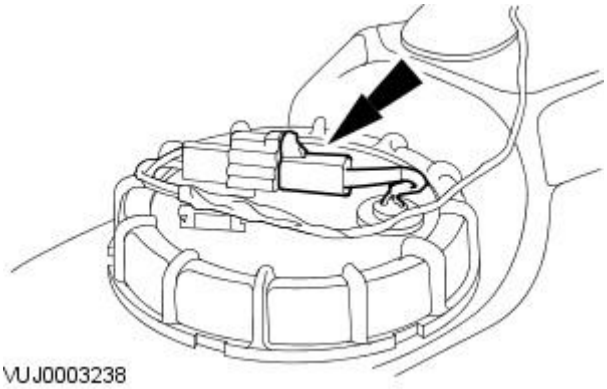

4. Detach the electrical connector.

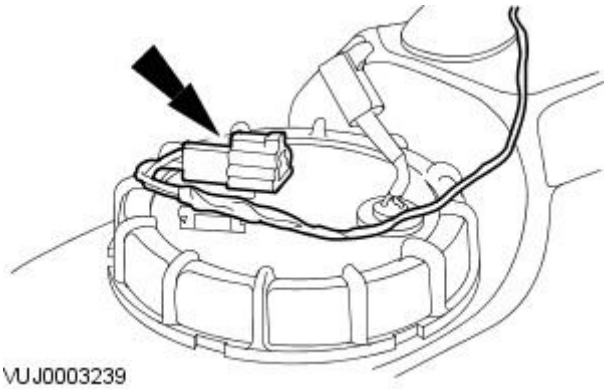

5. Using the special tool, remove the locking ring.

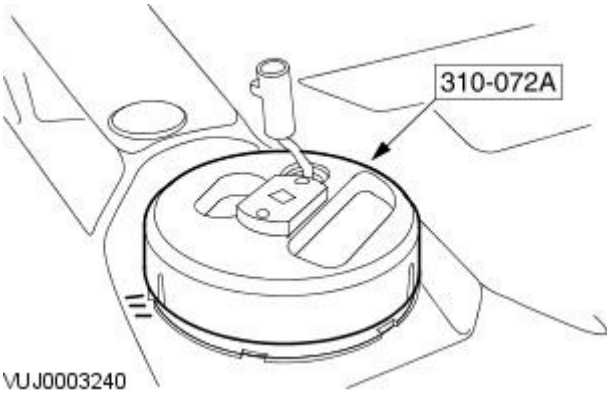

6. CAUTION: Make sure the float or arm are not damaged while removing the fuel transfer pump.

Detach the fuel transfer pump.

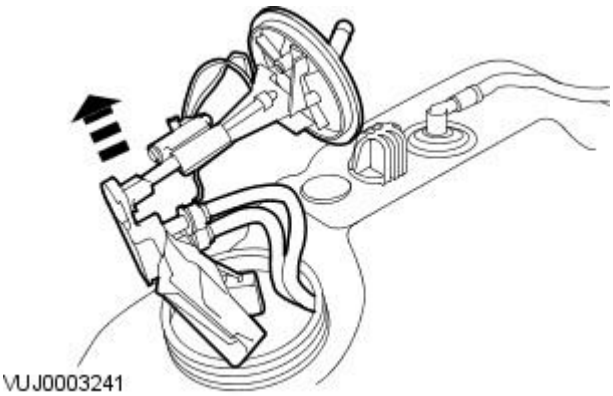

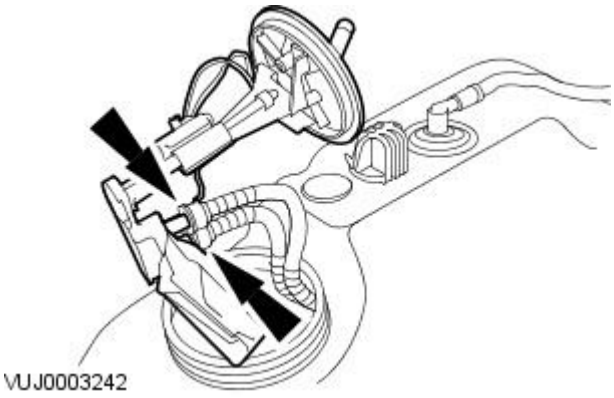

7. Remove the fuel transfer pump.

- Disconnect the cross over pipes
- Remove and discard the O-ring seal.

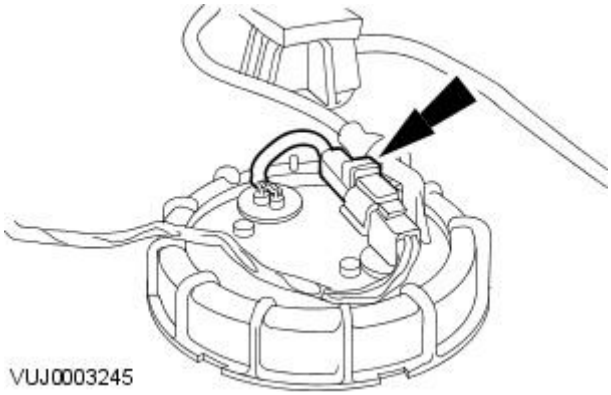

8. Disconnect the electrical connector.

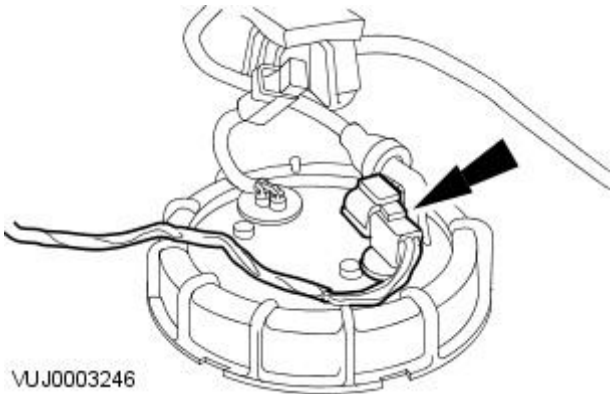

9. Detach the electrical connector.

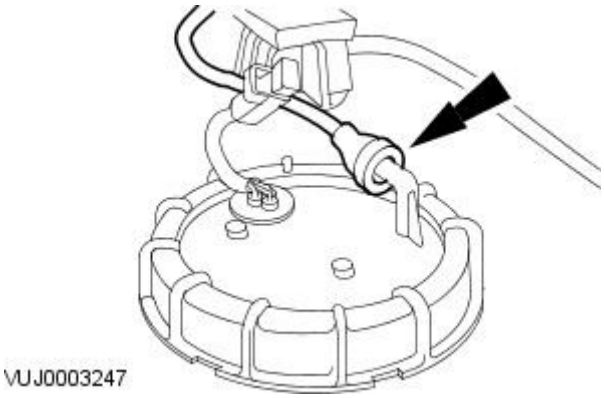

10. Disconnect the fuel supply pipe.

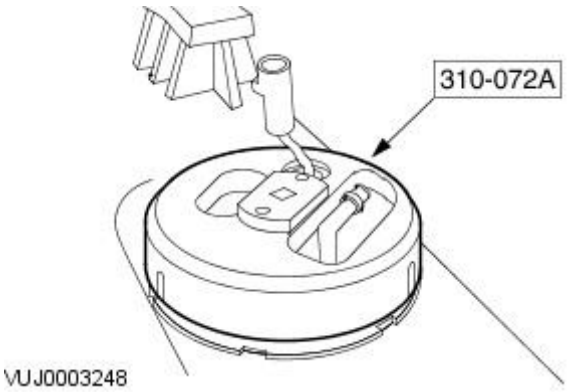

11. Using the special tool, remove the locking ring.

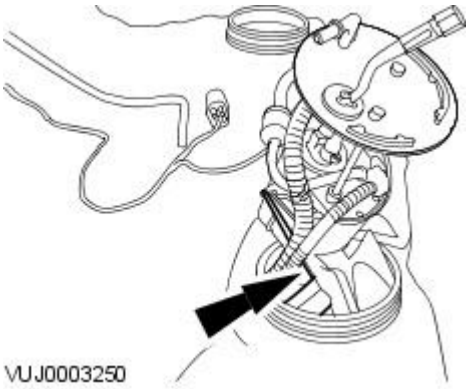

12. CAUTION: Make sure the float or arm are not damaged while removing the fuel pump module.

Guide the fuel pump module through the aperture.

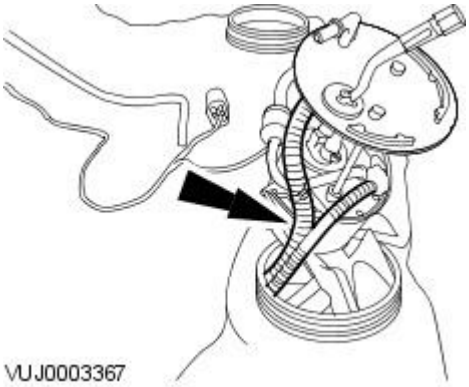

13. CAUTION: Make sure damage to the fuel cross over pipes does not occur.

Guide the cross over pipes through the aperture.

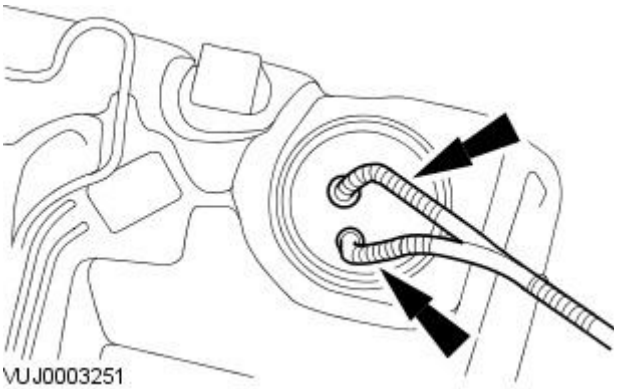

14. Remove the fuel pump module and cross over pipes.

- Remove and discard the O-ring seal.

15. Using the fuel pump access holes to gain access to the fuel, remove the fuel from the fuel tank using suitable fuel tank draining equipment. Follow the manufactures operating instructions.

Fuel System - General Information - Quick Release Coupling - Push Connect

General Procedures

Disconnect

1. WARNINGS:

Place the vehicle in a quarantined area and arrange "No Smoking/Fuel Vapors" signs about the vehicle.

Before any work is carried out on the fuel system, ground the vehicle to earth and maintain the ground connection until the work is complete.

Do not smoke or carry lighted tobacco or open flame of any type when working on or near any fuel related components. Highly flammable vapors are always present and may ignite. Failure to follow these instructions may result in personal injury.

Do not carry or operate cellular phones when working on or near any fuel related components. Highly flammable vapors are always present and may ignite. Failure to follow these instructions may result in personal injury.

The fuel system remains pressurized for a long time after the ignition is switched off. The fuel pressure must be relieved before attempting any repairs. Failure to follow these instructions may result in personal injury.

After carrying out repairs, the fuel system must be checked visually for leaks. Failure to follow these instructions may result in personal injury.

This procedure involves fuel handling. Be prepared for fuel spillage at all times and always observe fuel handling precautions. Failure to follow these instructions may result in personal injury.

Disconnect the battery ground cable.
For additional information, refer to: Battery Disconnect and Connect (414-01 Battery, Mounting and Cables, General Procedures).

2. Relieve the fuel pressure.
For additional information, refer to: Fuel System Pressure Release.

3. Disconnect the fuel line quick release coupling.

1. Press the fuel line quick release coupling locking tangs.
2. Disconnect the fuel line quick release coupling.

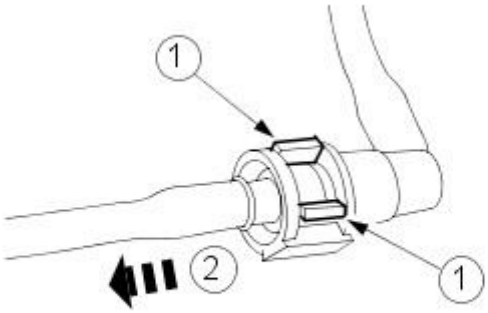

VUE0004022

4. Disconnect the fuel line quick release coupling.

1. Pull the fuel line quick release coupling locking tang.
2. Push the clip through the fuel line quick release coupling to release the fuel line.

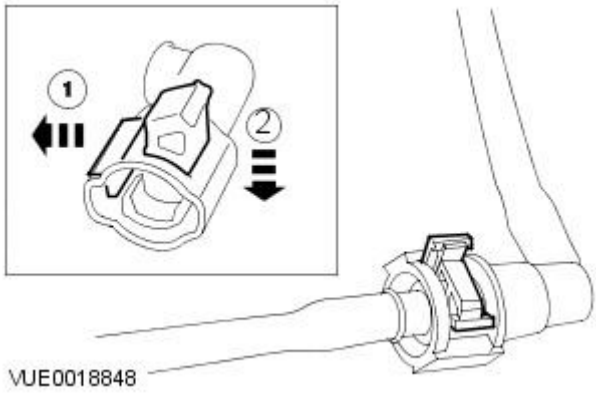

VUE0018848

5. Disconnect the fuel line quick release coupling.

1. Press the fuel line quick release coupling locking tangs.
2. Disconnect the fuel line quick release coupling.

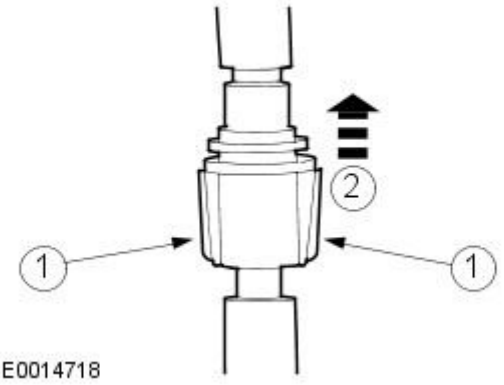

6. Disconnect the fuel line quick release coupling.

- Press the fuel line quick release coupling buttons and pull the fuel line to disconnect.

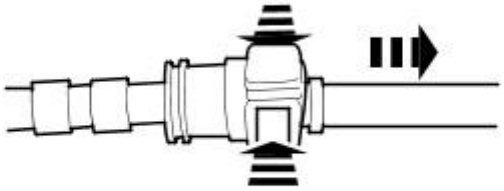

7. Release the fuel tank vent line quick release coupling.

- Press the fuel tank vent line quick release coupling locking release collar.

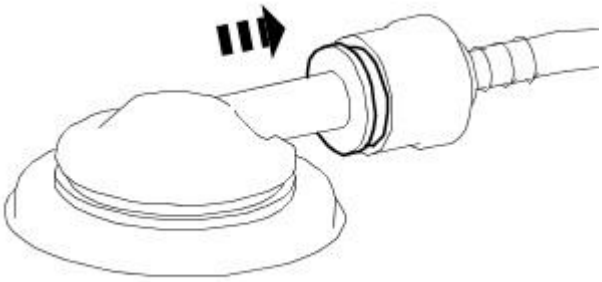

8. Disconnect the fuel tank vent line quick release coupling.

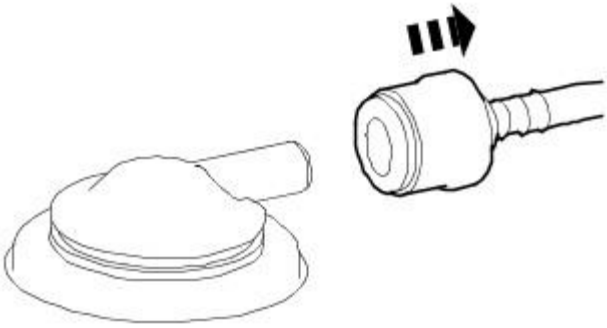

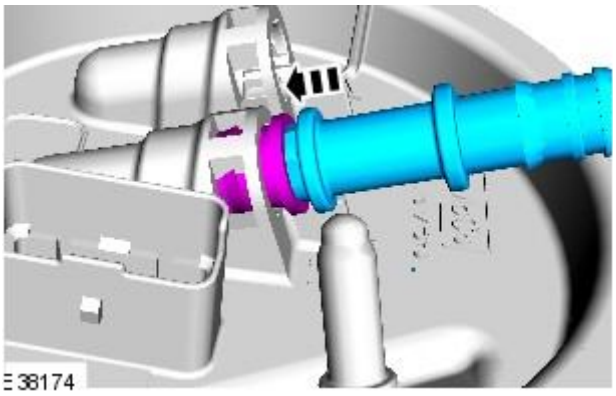

9. Release the fuel line quick release coupling.

- Press the fuel line quick release coupling locking release collar.

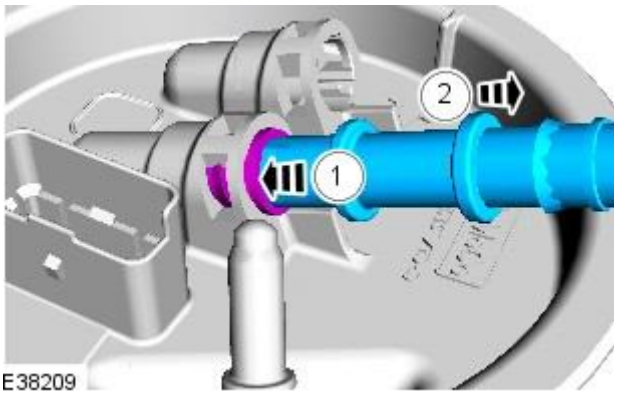

10. Disconnect the fuel line quick release coupling.

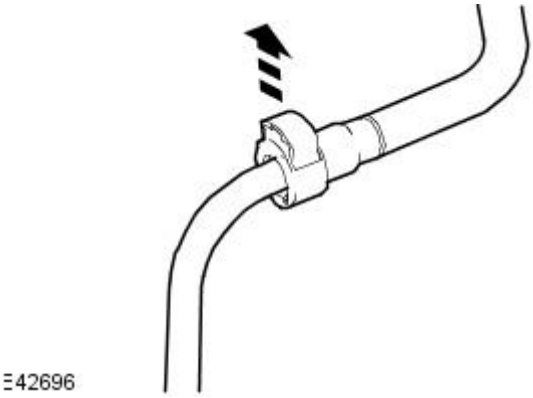

11. Using a suitable Flat-bladed screwdriver release the fuel line quick release coupling secondary locking tang.

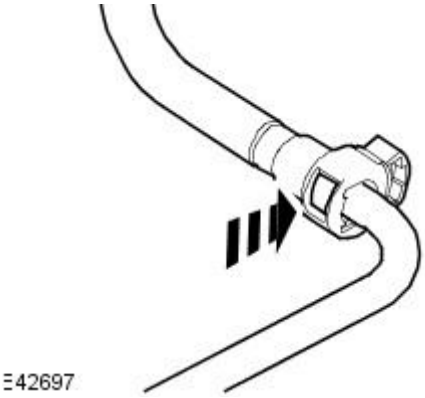

12. Operate the fuel line quick release coupling primary locking tang.

- Push the fuel line quick release coupling primary locking tang into from the fuel line quick release coupling.

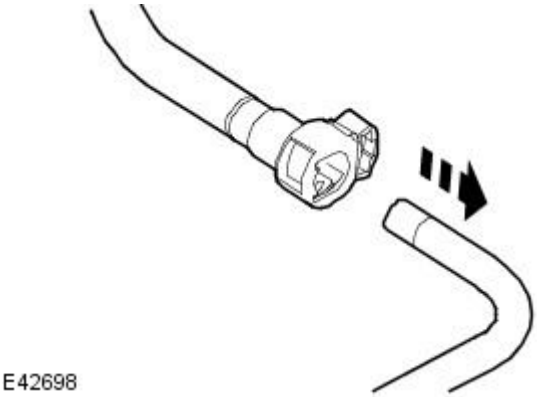

13. Disconnect the fuel line from the fuel line quick release coupling.

Connect

• WARNINGS:

Do not smoke or carry lighted tobacco or open flame of any type when working on or near any fuel related components. Highly flammable vapors are always present and may ignite. Failure to follow these instructions may result in personal injury.

Do not carry or operate cellular phones when working on or near any fuel related components. Highly flammable vapors are always present and may ignite. Failure to follow these instructions may result in personal injury.

This procedure involves fuel handling. Be prepared for fuel spillage at all times and always observe fuel handling precautions. Failure to follow these instructions may result in personal injury.

After carrying out repairs, the fuel system must be checked visually for leaks. Failure to follow these instructions may result in personal injury.

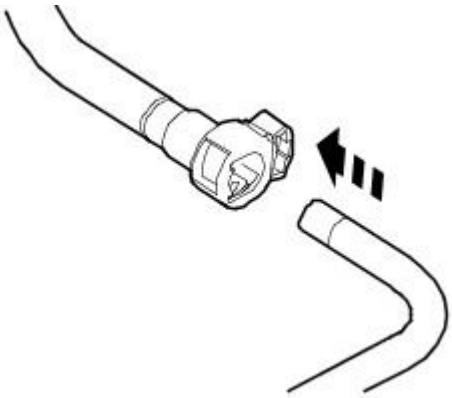

E42701

1. Install the fuel line to the fuel line quick release coupling.

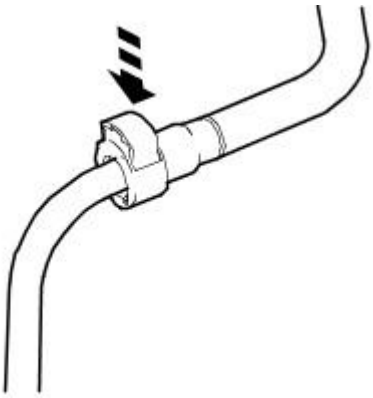

E42695

2. CAUTION: Make sure the quick release coupling primary locking tang clicks into place when installing.

Insert the fuel line quick release coupling secondary locking tang into the fuel line quick release coupling.

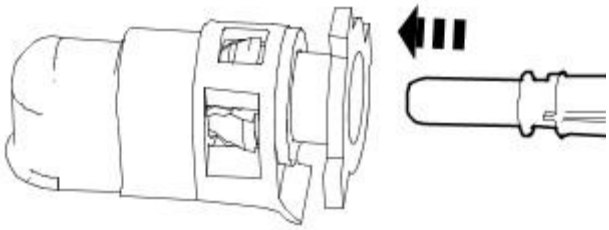

E38272

3. CAUTION: After installation, to make sure that the fuel line is fully seated, pull on the line.

Install the fuel line quick release coupling.

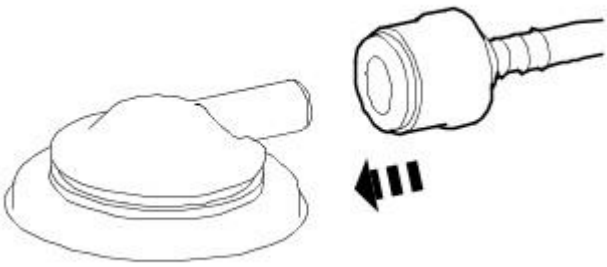

E38273

4. CAUTION: After installation, to make sure that the vent line is fully seated, pull on the line.

Install the fuel tank vent line quick release coupling.

5. CAUTION: Make sure the fuel line clicks into place when installing the line. To make sure that the fuel line is fully seated, pull on the line.

Install the fuel line quick release coupling.

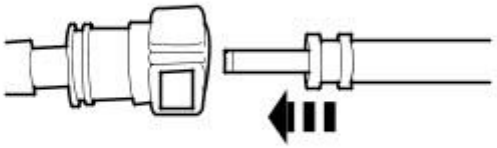

VUE0032293

6. NOTE: Make sure the collar on the fuel line is inserted fully into the fuel line quick release coupling.

Install the fuel line quick release coupling.

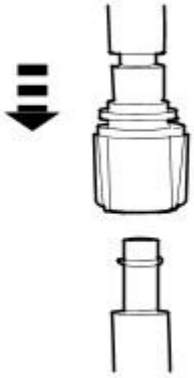

VUE0014720

7. NOTE: Make sure the collar on the fuel line is inserted fully into the fuel line quick release coupling before the locking tang is locked.

Install the fuel line quick release coupling.

1. Install the fuel line quick release coupling locking tang.
2. Rotate the fuel line quick release coupling locking tang into position.

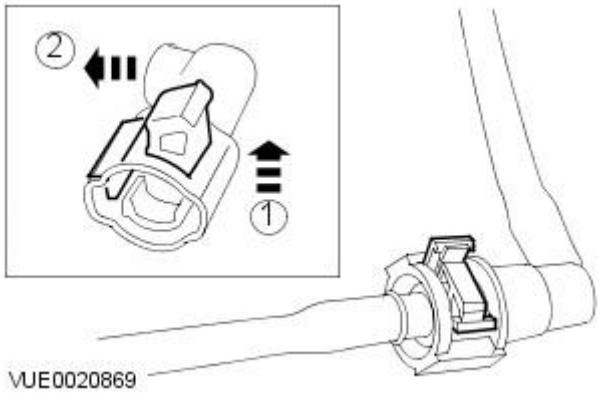

VUE0020869

8. NOTE: Make sure the collar on the fuel line is inserted fully into the fuel line quick release coupling before the locking tang is locked.

Install the fuel line quick release coupling.

1. Install the fuel line quick release coupling.
2. Press the fuel line quick release coupling locking tang into position.

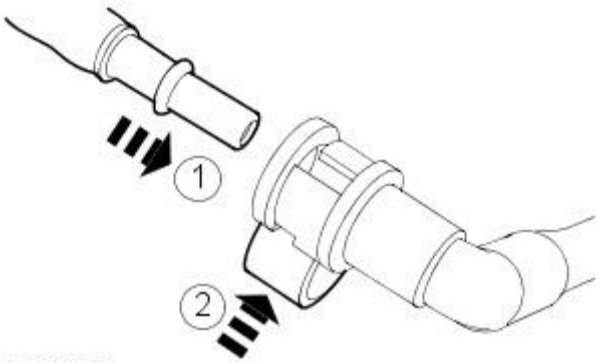

VUE0004016

Fuel System - General Information - Spring Lock Couplings

General Procedures

Special Tool(s)	
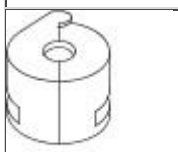 23-040	Spring Lock Coupler Tool or Equivalent 23-040

Disconnection

1. WARNINGS:

Place the vehicle in a quarantined area and arrange "No Smoking/Petrol Fumes" signs about the vehicle.

Before any work is carried out on the fuel system, ground the vehicle to earth and maintain the ground connection until the work is complete.

Do not smoke or carry lighted tobacco or open flame of any type when working on or near any fuel related components. Highly flammable vapors are always present and may ignite. Failure to follow these instructions may result in personal injury.

Do not carry or operate cellular phones when working on or near any fuel related components. Highly flammable vapours are always present and may ignite. Failure to follow these instructions may result in personal injury.

The fuel system remains pressurized for a long time after the ignition is switched off. The fuel pressure must be relieved before attempting any repairs. Failure to follow these instructions may result in personal injury.

This procedure involves fuel handling. Be prepared for fuel spillage at all times and always observe fuel handling precautions. Failure to follow these instructions may result in personal injury.

After carrying out repairs, the fuel system must be checked visually for leaks. Failure to follow these instructions may result in personal injury.

Disconnect the battery ground cable.
For additional information, refer to: Battery Disconnect and Connect (414-01 Battery, Mounting and Cables, General Procedures).

2. Relieve the fuel pressure.
For additional information, refer to: Fuel System Pressure Release (310-00 Fuel System - General Information, General Procedures).
.

3. Remove the safety clip from the spring lock coupling.

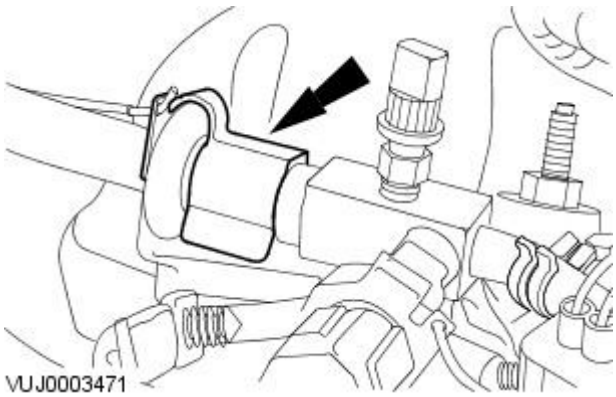

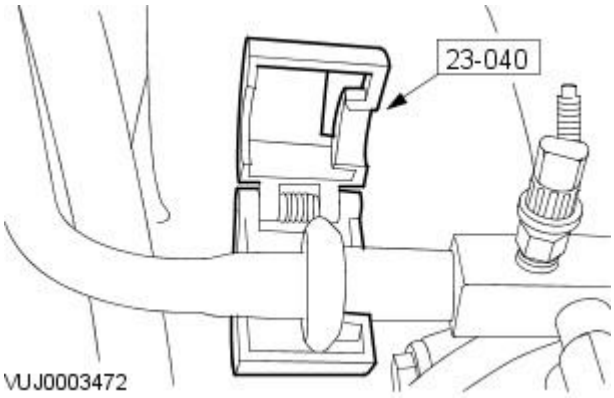

4. Install the spring lock coupling tool.

- Place suitable absorbent material below the pipe to collect fuel spillage

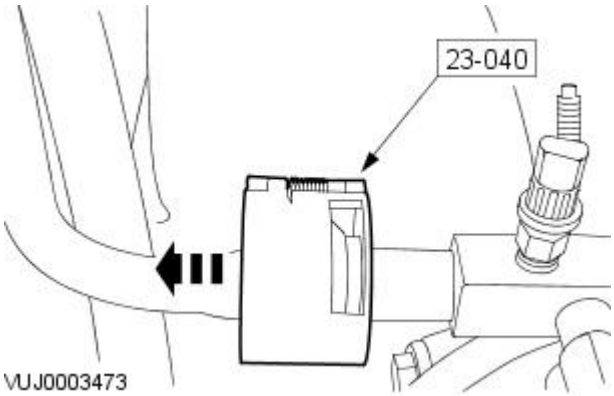

5. Close and push the spring lock coupling tool into the open side of the cage.

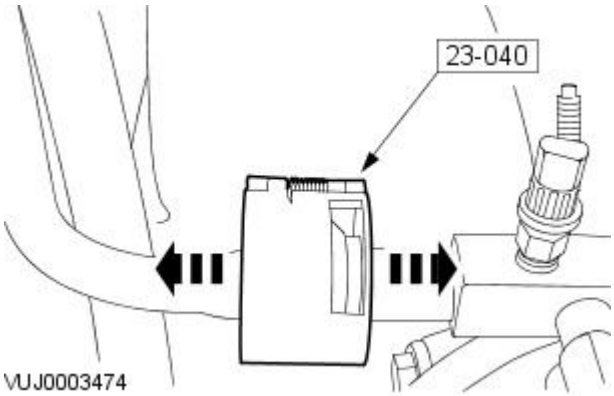

6. Separate the fitting.

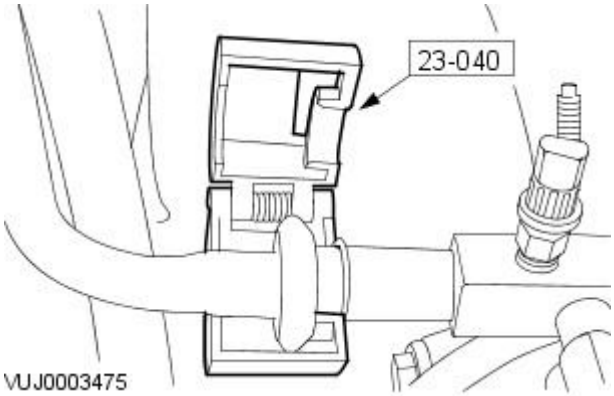

7. Remove the spring lock coupling tool.

Connection

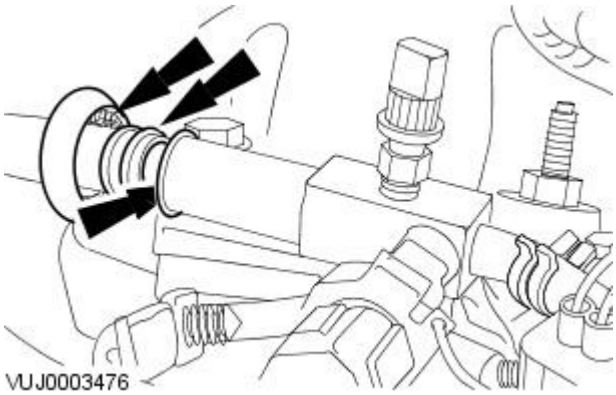

1. Inspect and clean both coupling ends. Install new O-rings and garter springs if necessary.

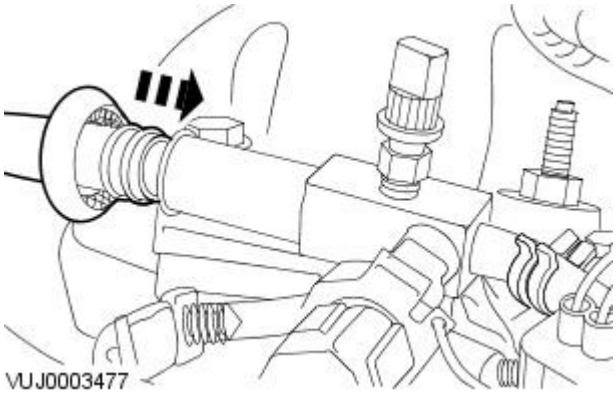

2. Fit the male fitting into the female end and push until the garter spring snaps over the flared end of the male fitting.

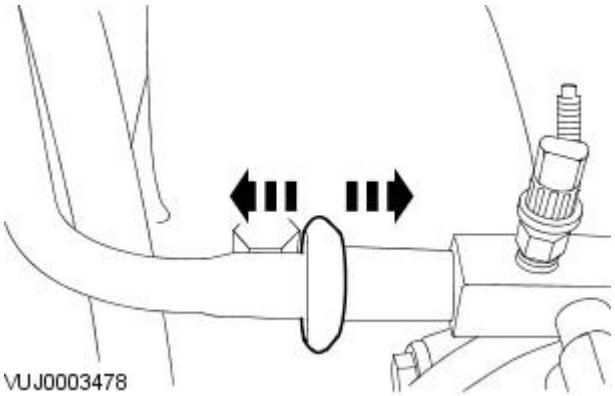

3. Make sure the coupling is engaged by pulling on the lines.

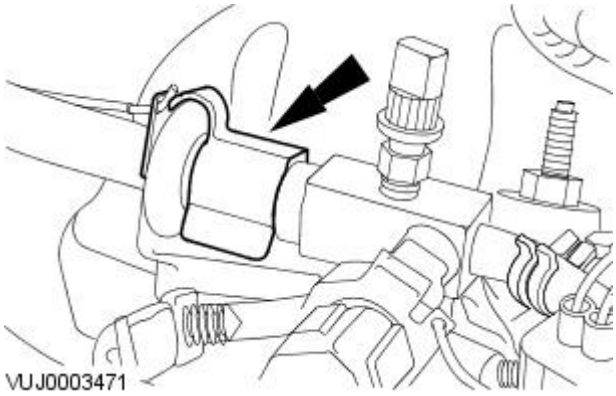

4. Install the safety clip.

- Remove the absorbent material below the pipe

Published: 11-May-2011

Fuel Tank and Lines -

Torque Specifications

Description	Nm	lb-ft	lb-in
Fuel tank support strap retaining bolts	25	18	-
Fuel pump module locking ring - vehicles with 2.5L or 3.0L engine (non federal market vehicles)	70	52	-
Fuel pump module locking ring - vehicles with 2.5L or 3.0L engine (federal market vehicles)	120	89	-
Fuel pump module locking ring - vehicles with 2.0L or diesel engine	85	63	-
Transfer pump locking ring (non federal market vehicles)	70	52	-
Transfer pump locking ring (federal market vehicles)	120	89	-
Fuel tank filler pipe to fuel tank hose retaining clip	3	-	27
Fuel tank filler pipe retaining nuts	4	-	35
Fuel filter bracket retaining nuts - vehicles with 2.0L, 2.5L or 3.0L engine	4	-	35
Axle assembly rear retaining bolt	110	81	-
Axle assembly front retaining bolts	90	66	-

Fuel Tank and Lines - Fuel Tank and Lines

Description and Operation

Vehicles with 2.0L engine

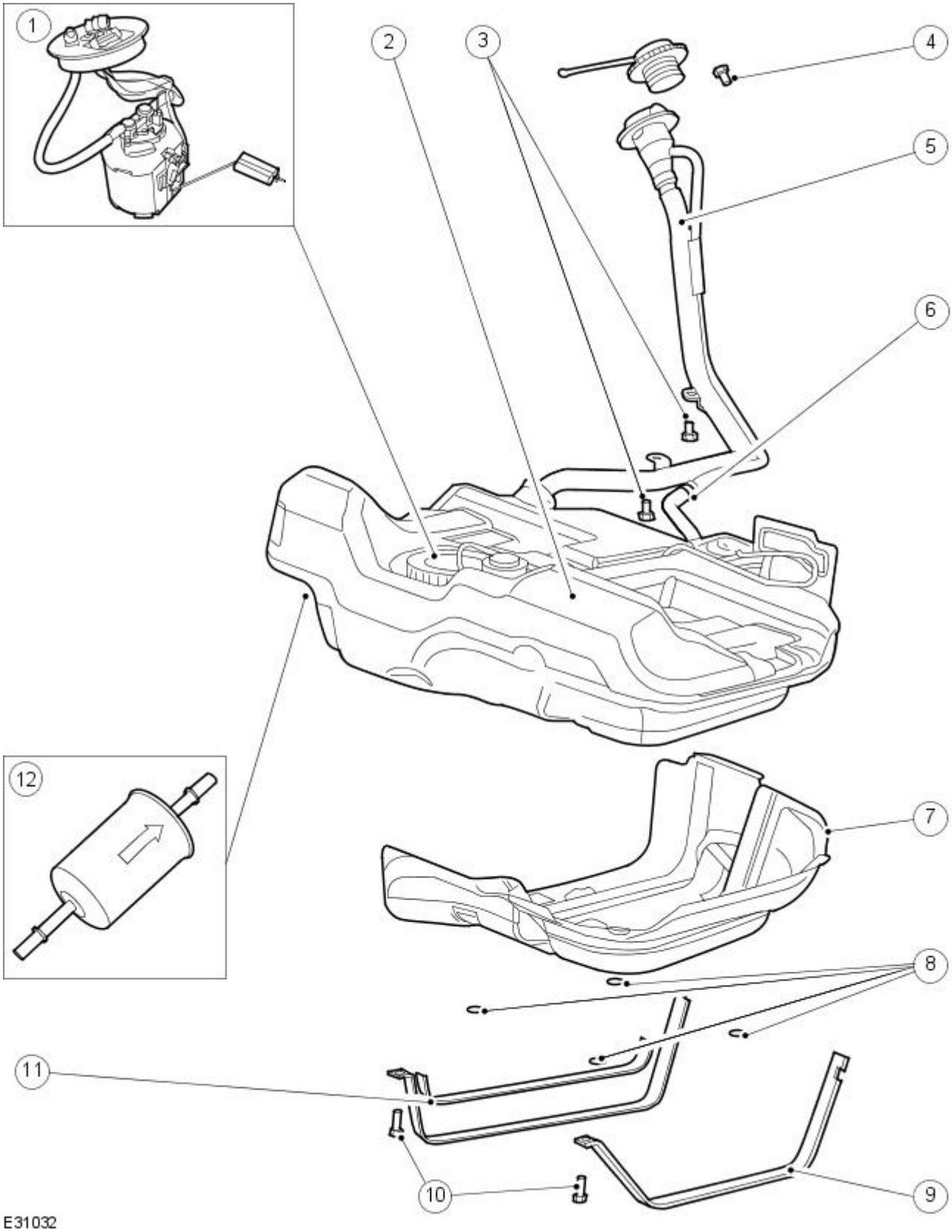

Item	Part Number	Description
1	-	Fuel pump module
2	-	Fuel tank
3	-	Lower fuel tank filler pipe retaining nut
4	-	Upper fuel tank filler pipe retaining nut
5	-	Fuel tank filler pipe
6	-	Fuel tank filler pipe breather hose
7	-	Fuel tank heat shield
8	-	Fuel tank heat shield retaining clips
9	-	Fuel tank support straps
10	-	Fuel tank support straps retaining bolts
11	-	Fuel tank support strap insulator
12	-	Fuel filter

Vehicles with diesel engine

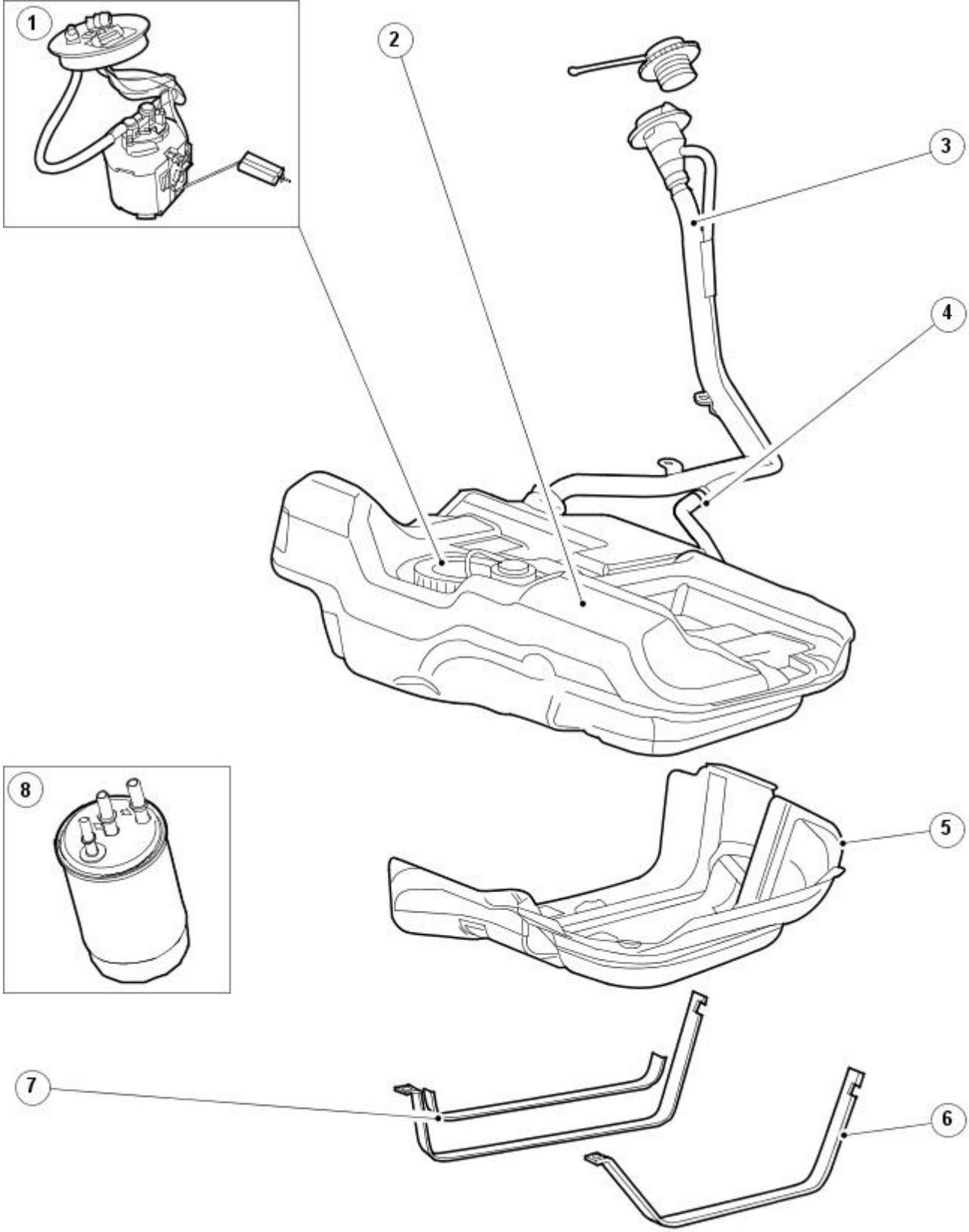

E49029

Item	Part Number	Description
1	-	Fuel level sensor
2	-	Fuel tank
3	-	Fuel tank filler pipe
4	-	Fuel tank filler pipe breather hose
5	-	Fuel tank heat shield
6	-	Fuel tank support straps
7	-	Fuel tank support strap insulator
8	-	Fuel filter

Vehicles with 2.5L or 3.0L engine

• NOTE: Federal market vehicle shown, non federal market vehicle similar.

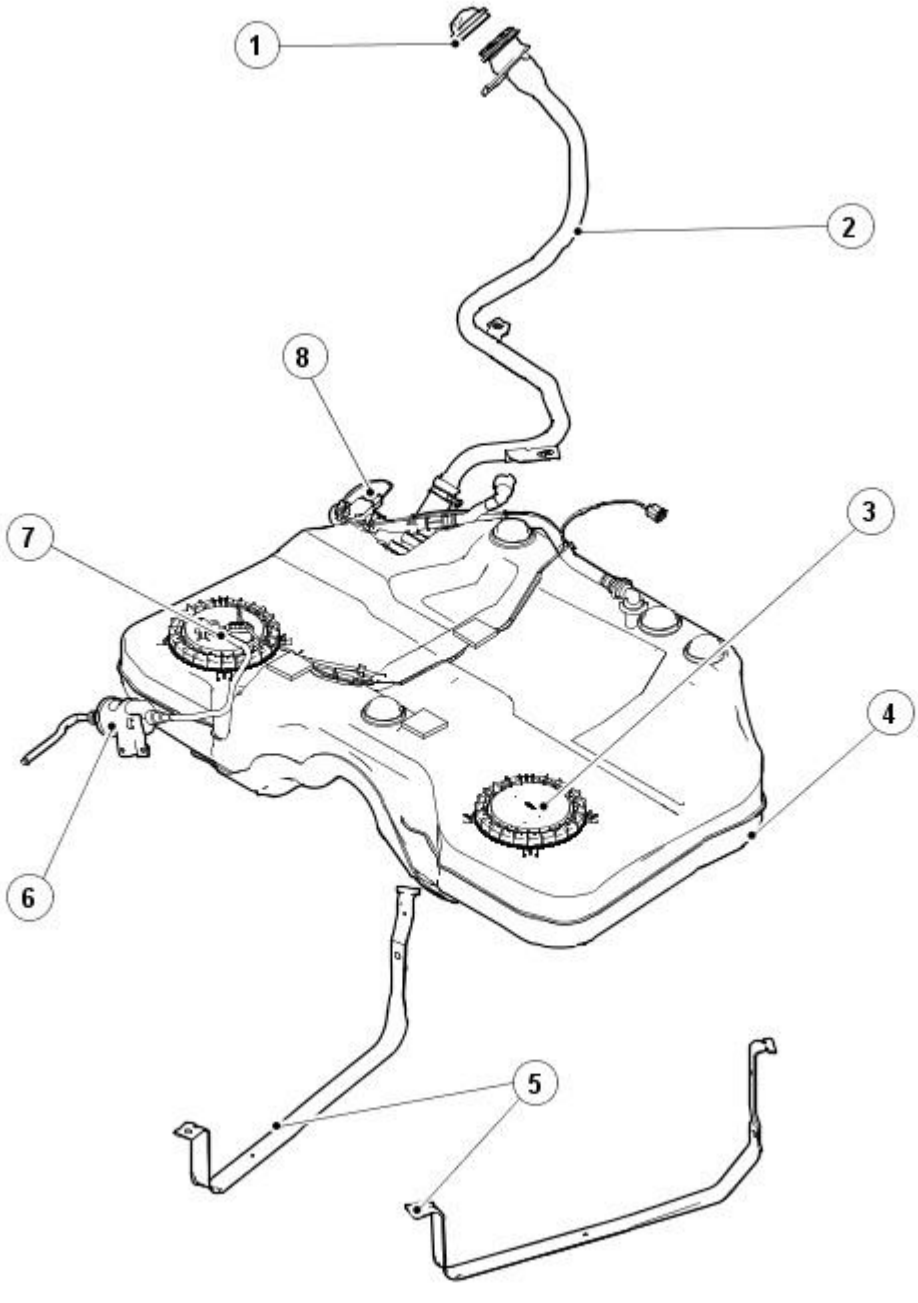

E49051

Item	Part Number	Description
1	—	Fuel filler cap
2	—	Fuel tank filler pipe
3	—	Fuel transfer pump
4	—	Fuel tank
5	—	Fuel tank support straps
6	—	Fuel filter
7	—	Fuel pump module
8	—	Fuel tank pressure sensor (Federal market vehicles only)

Fuel Tank

The fuel tank is of a plastic construction and is retained to the vehicle by two steel support straps. The fuel tank support straps are mounted onto the underside of the vehicle chassis towards the rear of the fuel tank and retained by bolts to the vehicle towards the front of the fuel tank. Fuel tank ventilation is achieved through two fuel tank roll-over valves into an evaporative emission canister which absorbs fuel tank vapor. The fuel tank roll-over valves are integral to the fuel tank and will prevent fuel loss from the fuel tank if the vehicle becomes inverted. A fuel level valve is also incorporated into the fuel tank to prevent fuel overfilling, this allows the fuel tank to maintain adequate space for expansion of the fuel.
For additional information, refer to: Evaporative Emissions (303-13 Evaporative Emissions, Description and Operation).
Federal market vehicles only are fitted with leak check diagnostics which detect leaks in the fuel vapor system using signals from a vapor pressure sensor mounted in the evaporative emission canister purge vapor line.

Fuel Filter - Vehicles with 2.0L, 2.5L or 3.0L engine

The fuel filter is of a conventional construction being that of a paper element sealed within a steel canister. The fuel filter is located in front of the fuel tank, on the right-hand side of the floor pan.

Fuel Filter - Vehicles with diesel engine

The fuel filter is located at the top of the bulkhead on the right-hand side of the vehicle. The fuel filter incorporates a fuel pre heat function, which utilizes a ball valve operated by a bimetallic strip. When the temperature is less than 15°C (59°F), the ball valve allows the warm fuel in the fuel return system to pass back through the fuel filter to the fuel pump to improve cold running. Once the temperature exceeds 31°C (88°F) a bimetallic strip closes the ball valve in the fuel filter and all of the fuel in the fuel return system is directed back to the fuel tank.

Fuel Tank Filler Pipe

The fuel tank filler pipe is of a steel construction and is retained to the vehicle by means of three retaining nuts, one retaining the filler neck to the body and two nuts retaining the filler pipe to the vehicle chassis. The fuel tank filler pipe is fitted with a screw turn filler cap, which seals the system.

Inertia Fuel Shutoff (IFS) Switch

The inertia fuel shutoff (IFS) switch is designed to cut power to the fuel pump in the event of an accident. The shutoff switch is located behind the right-hand cowl side trim panel.

Fuel pump - Vehicles with 2.0L, 2.5L or 3.0L engine

On all wheel drive vehicles, the fuel is pumped by a transfer pump and an electric turbine pump. Both pumps are fitted with fuel level sender units which are serviced separately. On two wheel drive vehicles, the fuel is pumped by a single electric turbine pump which is fitted with a separately serviced fuel level sender. The fuel pumps are fixed to the fuel tank by means of a locking ring and seal, which can only be accessed by removing the fuel tank.

On 2.0L vehicles the fuel tank is of a conventional design, a fuel pump module with mechanical pressure regulator and a local returnless circuit through the fuel filter is incorporated.

On 2.5L and 3.0L vehicles the fuel tank is of a saddle design, incorporating a fuel pump module and a transfer pump module. The transfer pump module (jet pump), located in the left-hand saddle, transfers low pressure fuel (high flow) to the right-hand saddle of the tank. The fuel pump module located in the right-hand saddle, supplies high pressure fuel (low flow) to the fuel pump on the engine.

Fuel Pump - Vehicles with diesel engine

For additional information, refer to: Fuel Charging and Controls (303-04B Fuel Charging and Controls - 2.0L Duratorq-TDCi/2.2L Duratorq-TDCi (110kW/150PS) - Puma, Description and Operation).

Fuel Tank and Lines - Fuel Tank and Lines

Diagnosis and Testing

Inspection and verification

1. **1.** Verify the customer concern.
2. **2.** Visually inspect for obvious signs of mechanical or electrical damage.

Visual inspection, vehicles with petrol engines

Mechanical	Electrical
• Fuel line(s) • Push connect fittings • Fuel leak(s) • Fuel filler cap • Fuel tank filler pipe • Fuel filter • Fuel tank • Fuel tank roll-over valve	• Inertia fuel shutoff (IFS) switch • Electrical connector(s) • Damaged or corroded wiring harness • Fuel pump module • Fuel transfer pump • Fuse(s)

Visual inspection, vehicles with diesel engines

Mechanical	Electrical
• Fuel line(s) • Fuel leak(s) • Fuel filler cap • Fuel tank filler pipe • Fuel filter • Fuel tank • Fuel tank roll-over valve	• Inertia fuel shutoff (IFS) switch

• WARNINGS:

Vehicles with diesel engine only. Do **NOT** carry out any work on the fuel system with the engine running. The fuel pressure within the system can be as high as 1600 bar (23,206 lb/in²). Failure to follow this instruction may result in personal injury.

Eye protection must be worn at all times when working on or near any fuel related components. Failure to follow this instruction may result in personal injury.

Vehicles with diesel engine only. The fuel system remains pressurized after the ignition is switched off. If communications with a suitable tester (able to read fuel rail pressure and temperature) can be established, wait until the tester indicates pressure of less than 20 bar (290 lb/in²), and temperature of less than 35° C (95° F) before working on the system. If communications with a suitable tester cannot be established, the fuel system must **NOT** be worked on for a period of fifteen minutes following the ignition being switched off. Failure to follow this instruction may result in personal injury.

This procedure involves fuel handling. Be prepared for fuel spillage at all times and always observe fuel handling precautions. Failure to follow this instruction may result in personal injury.

Vehicles with diesel engine only. After carrying out repairs, the fuel system must be checked visually for leaks. This should be done after the engine has been run, but with the engine switched **OFF**. Failure to follow this instruction may result in personal injury.

If fuel is taken internally, **DO NOT** induce vomiting. Seek immediate medical attention. Failure to follow this instruction may result in personal injury.

If fuel contacts the eyes, flush the eyes with cold water or eyewash solution and seek medical attention. Failure to follow this instruction may result in personal injury.

Wash hands thoroughly after handling, as prolonged contact may cause irritation. Should irritation develop, seek medical attention. Failure to follow this instruction may result in personal injury.

• CAUTIONS:

Vehicles with diesel engine only. Before disconnecting any part of the system, it is imperative that all dust, dirt and debris is removed from around components to prevent ingress of foreign matter into the fuel system. Failure to follow this instruction may result in damage to the vehicle.

Vehicles with diesel engine only. The fuel pipes between the injectors and the rail must be discarded after each use, and new pipes installed. Failure to follow this instruction may result in damage to the vehicle.

Vehicles with diesel engine only. It is essential that absolute cleanliness is observed when working with these components. Always install blanking plugs to any open orifices or lines. Failure to follow this instruction may result in damage to the vehicle.

Vehicles with diesel engine only. Make sure that the workshop area in which the vehicle is being worked on is as clean and dust-free as possible. Areas in which work on clutches, brakes or where welding or machining are carried out are not suitable in view of the risk of contamination to the fuel system. Failure to follow this instruction may result in damage to the vehicle.

Vehicles with diesel engine only. Do not interchange fuel injectors. Improper injector installation can cause misfires, poor running and severe engine damage.

Make sure that any protective clothing worn is clean and made from lint-free non-flocking material. Failure to follow this instruction may result in damage to the vehicle.

Make sure that any protective gloves worn are new and are of the non-powdered latex type. Failure to follow this instruction may result in damage to the vehicle.

Vehicles with diesel engine only. Make sure that clean, non-plated tools are used. Clean tools using a new brush that will not lose it's bristles and fresh cleaning fluid prior to starting work on the vehicle. Failure to follow this instruction may result in damage to the vehicle.

Use a steel-topped work bench and cover it with clean, lint-free, non-flocking material. Failure to follow this instruction may result in damage to the vehicle.

When probing connectors to take measurements in the course of the pinpoint tests, use the adaptor kit, part number 3548-1358-00. Failure to follow this instruction may result in damage to the vehicle.

• NOTE: This section contains references to Parameter Identifiers (PIDs). Where the Jaguar approved diagnostic system is not available, a scantool may be used to access these PIDs, all of which give information, and some of which can be used to both read information and to activate components. The format of the information may vary, depending on the tool used.

• NOTE: **Vehicles with diesel engine only.** As well as carrying out its normal function the glow plug indicator also acts as an engine check lamp which will flash continuously when a hard diagnostic trouble code (DTC) is detected by the ECM. Soft DTCs are also stored by the ECM but will only be identified if the system is checked for DTCs using the Jaguar approved diagnostic system.

• NOTE: If a DTC is detected, all DTCs must be cleared after the concern is repaired. Failure to clear all DTCs may cause driveability concerns.

• NOTE: **Vehicles with diesel engine only.** If the fuel level in the fuel tank drops below approximately four liters, rough running will occur. This is to signal to the driver that the vehicle requires refuelling in order to prevent the fuel system from running dry.

• NOTE: When performing voltage or resistance tests, always use a digital multimeter (DMM) accurate to 3 decimal places, and with an up-to-date calibration certificate. When testing resistance, always take the resistance of the DMM leads into account.

• NOTE: Check and rectify basic faults before beginning diagnostic routines involving pinpoint tests.

• NOTE: If DTCs are recorded and the symptom is not present when performing the pinpoint tests, an intermittent concern may be the cause. Always check for loose connections and corroded terminals.

3. **3.** If an obvious cause for an observed or reported concern is found, correct the cause (if possible) before proceeding to the next step.

Symptom chart (vehicles with petrol engine only)

Symptom	Possible source	Action
Engine cranks, but does not start	• IFS switch • Low/contaminated fuel • ECM malfunction	Check that the IFS switch is in the 'down' position, check the fuel level and condition, GO to Pinpoint Test F. Check for DTCs indicating fuel pump inactive. For ECM tests, REFER to: Electronic Engine Controls - 2.0L NA V6 - AJV6 (303-14A Electronic Engine Controls - 2.0L NA V6 - AJV6/2.5L NA V6 - AJV6/3.0L NA V6 - AJ27, Diagnosis and Testing) / Electronic Engine Controls - 2.5L NA V6 - AJV6/3.0L NA V6 - AJ27, VIN Range: E96603->J28492 (303-14A Electronic Engine Controls - 2.0L NA V6 - AJV6/2.5L NA V6 - AJV6/3.0L NA V6 - AJ27, Diagnosis and Testing).
Difficult to start	• Low/contaminated fuel • Purge valve • Fuel pump • Engine coolant temperature (ECT) sensor • Ignition system • Battery/charging system	Check the fuel level and condition, GO to Pinpoint Test F. For evaporative emission system tests, REFER to: Evaporative Emissions - 2.0L NA V6 - AJV6 (303-13 Evaporative Emissions, Diagnosis and Testing). and/or REFER to: Evaporative Emissions - 2.5L NA V6 - AJV6/3.0L NA V6 - AJ27 (303-13 Evaporative Emissions, Diagnosis and Testing). Check for fuel pump DTCs, refer to DTC table. For engine coolant temperature sensor tests, REFER to: Electronic Engine Controls - 2.0L NA V6 - AJV6 (303-14A Electronic Engine Controls - 2.0L NA V6 - AJV6/2.5L NA V6 - AJV6/3.0L NA V6 - AJ27, Diagnosis and Testing). and/or REFER to: Electronic Engine Controls - 2.5L NA V6 - AJV6/3.0L NA V6 - AJ27, VIN Range: E96603->J28492 (303-14A Electronic Engine Controls - 2.0L NA V6 - AJV6/2.5L NA V6 - AJV6/3.0L NA V6 - AJ27, Diagnosis and Testing). For ignition system tests, REFER to: Engine Ignition - 2.0L NA V6 - AJV6 (303-07A Engine Ignition - 2.0L NA V6 - AJV6/2.5L NA V6 - AJV6/3.0L NA V6 - AJ27, Diagnosis and Testing). and/or REFER to: Engine Ignition - 2.5L NA V6 - AJV6/3.0L NA V6 - AJ27 (303-07A Engine Ignition - 2.0L NA V6 - AJV6/2.5L NA V6 - AJV6/3.0L NA V6 - AJ27, Diagnosis and Testing). For charging system tests, REFER to: Battery (414-01 Battery, Mounting and Cables, Diagnosis and Testing). and/or REFER to: Generator (414-02 Generator and Regulator, Diagnosis and Testing).

Symptom	Possible source	Action
Difficult to start hot	• Injector leak • Fuel temperature sensor • IAT sensor • MAF sensor • Engine coolant temperature (ECT) sensor • Purge valve • Fuel pump • Ignition system • EGR valve stuck open	For fuel injector tests, REFER to: Fuel Charging and Controls - 2.0L NA V6 - AJV6 (303-04A Fuel Charging and Controls - 2.0L NA V6 - AJV6/2.5L NA V6 - AJV6/3.0L NA V6 - AJ27, Diagnosis and Testing). and/or REFER to: Fuel Charging and Controls - 2.5L NA V6 - AJV6/3.0L NA V6 - AJ27, VIN Range: E96603->J28492 (303-04A Fuel Charging and Controls - 2.0L NA V6 - AJV6/2.5L NA V6 - AJV6/3.0L NA V6 - AJ27, Diagnosis and Testing). For sensor tests, REFER to: Electronic Engine Controls - 2.0L NA V6 - AJV6 (303-14A Electronic Engine Controls - 2.0L NA V6 - AJV6/2.5L NA V6 - AJV6/3.0L NA V6 - AJ27, Diagnosis and Testing). and/or REFER to: Electronic Engine Controls - 2.5L NA V6 - AJV6/3.0L NA V6 - AJ27, VIN Range: E96603->J28492 (303-14A Electronic Engine Controls - 2.0L NA V6 - AJV6/2.5L NA V6 - AJV6/3.0L NA V6 - AJ27, Diagnosis and Testing). For evaporative emission system tests, REFER to: Evaporative Emissions - 2.0L NA V6 - AJV6 (303-13 Evaporative Emissions, Diagnosis and Testing). and/or REFER to: Evaporative Emissions - 2.5L NA V6 - AJV6/3.0L NA V6 - AJ27 (303-13 Evaporative Emissions, Diagnosis and Testing). Check for fuel pump DTCs, refer to DTC table. For ignition system tests, REFER to: Engine Ignition - 2.0L NA V6 - AJV6 (303-07A Engine Ignition - 2.0L NA V6 - AJV6/2.5L NA V6 - AJV6/3.0L NA V6 - AJ27, Diagnosis and Testing). and/or REFER to: Engine Ignition - 2.5L NA V6 - AJV6/3.0L NA V6 - AJ27 (303-07A Engine Ignition - 2.0L NA V6 - AJV6/2.5L NA V6 - AJV6/3.0L NA V6 - AJ27, Diagnosis and Testing). For EGR system tests, REFER to: Engine Emission Control (303-08 Engine Emission Control - 2.0L Duratorq-TDCi/2.2L Duratorq-TDCi (110kW/150PS) - Puma, Diagnosis and Testing).
Engine stalls soon after start	• Low/contaminated fuel • Breather system disconnected/restricted • ECM relay • MAF sensor • Engine coolant temperature (ECT) sensor • Ignition system • Fuel rail pressure sensor • Air filter restricted • Air leakage	Check the fuel level and condition, GO to Pinpoint Test F. For breather system tests, REFER to: Engine Emission Control (303-08 Engine Emission Control - 2.0L Duratorq-TDCi/2.2L Duratorq-TDCi (110kW/150PS) - Puma, Diagnosis and Testing). For ECM relaly and sensor tests, REFER to: Electronic Engine Controls - 2.0L NA V6 - AJV6 (303-14A Electronic Engine Controls - 2.0L NA V6 - AJV6/2.5L NA V6 - AJV6/3.0L NA V6 - AJ27, Diagnosis and Testing). and/or REFER to: Electronic Engine Controls - 2.5L NA V6 - AJV6/3.0L NA V6 - AJ27, VIN Range: E96603->J28492 (303-14A Electronic Engine Controls - 2.0L NA V6 - AJV6/2.5L NA V6 - AJV6/3.0L NA V6 - AJ27, Diagnosis and Testing). For ignition system tests, REFER to: Engine Ignition - 2.0L NA V6 - AJV6 (303-07A Engine Ignition - 2.0L NA V6 - AJV6/2.5L NA V6 - AJV6/3.0L NA V6 - AJ27, Diagnosis and Testing). and/or REFER to: Engine Ignition - 2.5L NA V6 - AJV6/3.0L NA V6 - AJ27 (303-07A Engine Ignition - 2.0L NA V6 - AJV6/2.5L NA V6 - AJV6/3.0L NA V6 - AJ27, Diagnosis and Testing). For fuel rail pressure sensor tests, REFER to: Fuel Charging and Controls - 2.5L NA V6 - AJV6/3.0L NA V6 - AJ27, VIN Range: E96603->J28492 (303-04A Fuel Charging and Controls - 2.0L NA V6 - AJV6/2.5L NA V6 - AJV6/3.0L NA V6 - AJ27, Diagnosis and Testing). Check the air filter element and intake system.
Engine hesitates/poor acceleration/pre-detonation at high engine speeds	• Low/contaminated fuel • Restricted pedal travel (carpet, etc) • Fuel pump • No fuel pump commands • Throttle sensors • APP sensor • HO2 sensors • Engine control module (ECM) • Ignition system • EGR valve stuck open • Air leakage • Fuel starvation	Check the fuel level and condition, GO to Pinpoint Test F. Check the accelerator pedal for full travel. Check for fuel pump and related DTCs. For sensor and ECM tests, REFER to: Electronic Engine Controls - 2.0L NA V6 - AJV6 (303-14A Electronic Engine Controls - 2.0L NA V6 - AJV6/2.5L NA V6 - AJV6/3.0L NA V6 - AJ27, Diagnosis and Testing). and/or REFER to: Electronic Engine Controls - 2.5L NA V6 - AJV6/3.0L NA V6 - AJ27, VIN Range: E96603->J28492 (303-14A Electronic Engine Controls - 2.0L NA V6 - AJV6/2.5L NA V6 - AJV6/3.0L NA V6 - AJ27, Diagnosis and Testing). For ignition system tests, REFER to: Engine Ignition - 2.0L NA V6 - AJV6 (303-07A Engine Ignition - 2.0L NA V6 - AJV6/2.5L NA V6 - AJV6/3.0L NA V6 - AJ27, Diagnosis and Testing). and/or REFER to: Engine Ignition - 2.5L NA V6 - AJV6/3.0L NA V6 - AJ27 (303-07A Engine Ignition - 2.0L NA V6 - AJV6/2.5L NA V6 - AJV6/3.0L NA V6 - AJ27, Diagnosis and Testing). For EGR system tests, REFER to: Engine Emission Control (303-08 Engine Emission Control - 2.0L Duratorq-TDCi/2.2L Duratorq-TDCi (110kW/150PS) - Puma, Diagnosis and Testing). Check the air intake system for leakage. For fuel starvation tests, GO to Pinpoint Test E.
Difficulty in fuelling vehicle	• Customer using incorrect filling procedure • Service station equipment • Obstructions in/damage to filler neck/pipe • Blockage in vent system • Canister close valve blockage • Purge valve malfunction • Water ingress into carbon	Refer to owner's handbook. Check if filling difficulty is consistent, or intermittent. Check for obstructions/damage at filler neck. Check the vent system (this will vary dependent on market). Check for DTCs indicating an evaporative emissions system valve malfunction. For evaporative emissions system tests, REFER to: Evaporative Emissions - 2.5L NA V6 - AJV6/3.0L NA V6 - AJ27 (303-13 Evaporative Emissions, Diagnosis and Testing). Check the condition of the carbon canister.

Symptom	Possible source	Action
	canister ● Snow or ice pack around the canister outlet or filter	
Fuel smells in/around the vehicle	● Filler cap incorrectly fitted ● Leaks from joints ● Leaks from module seals ● Leak from inlet/outlet pipes at purge valve ● Inoperative purge valve	Check that the filler cap is correctly fitted and secure (the filler cap must be tightened to at least three 'clicks'). Inspect the pipes and joints for evidence of leakage, using an HC detector. Inspect the fuel tank for evidence indicating a leak from the module seals. If such evidence is found, the fuel tank should be removed to check the seals. Check for DTCs indicating an evaporative emissions system purge valve malfunction. For evaporative emissions system tests, REFER to: Evaporative Emissions - 2.5L NA V6 - AJV6/3.0L NA V6 - AJ27 (303-13 Evaporative Emissions, Diagnosis and Testing).
Engine stops with fuel indicated on the gauge	● Fuel transfer malfunction (2.5/3.0 L only) ● Level sensor malfunction ● Transfer pipes split/kinked (2.5/3.0 L only) ● Blocked transfer pump module jet (2.5/3.0 L only) ● Non fuel-related fault	Check for DTCs indicating a failure to transfer fuel, refer to the DTC index. For fuel transfer test, GO to Pinpoint Test C. Check the internal transfer pipes for damage/kinking. Check the 2mm hole as detailed in bulletin A310-01. Check for DTCs indicating a non fuel-related fault. For a full list of DTCs, REFER to: Electronic Engine Controls - 2.0L NA V6 - AJV6 (303-14A Electronic Engine Controls - 2.0L NA V6 - AJV6/2.5L NA V6 - AJV6/3.0L NA V6 - AJ27, Diagnosis and Testing) / Electronic Engine Controls - 2.5L NA V6 - AJV6/3.0L NA V6 - AJ27, VIN Range: E96603->J28492 (303-14A Electronic Engine Controls - 2.0L NA V6 - AJV6/2.5L NA V6 - AJV6/3.0L NA V6 - AJ27, Diagnosis and Testing).
Fuel pump noise	● Fuel pump module malfunction	For a basic noise test, GO to Pinpoint Test D.

Symptom chart (vehicles with diesel engine only)

Symptom	Possible source	Action
Engine cranks, but does not start	● IFS switch ● Low/contaminated fuel ● Blocked fuel filter ● Low pressure circuit fault ● Fuel metering valve blocked/contaminated ● Pump failure	Check that the inertia switch has not tripped. Check fuel level/condition. For fuel system tests, REFER to: Fuel Charging and Controls (303-04B Fuel Charging and Controls - 2.0L Duratorq-TDCi/2.2L Duratorq-TDCi (110kW/150PS) - Puma, Diagnosis and Testing).
Difficult to start	● Low/contaminated fuel ● Blocked fuel filter ● Low pressure circuit fault ● Fuel metering valve blocked/contaminated ● Injector(s) failure/programming	Check fuel level/condition. For fuel system tests, REFER to: Fuel Charging and Controls (303-04B Fuel Charging and Controls - 2.0L Duratorq-TDCi/2.2L Duratorq-TDCi (110kW/150PS) - Puma, Diagnosis and Testing). Check the injector programming using the Jaguar approved diagnostic system.
Rough idle	● Low/contaminated fuel ● Blocked fuel filter ● Fuel metering valve blocked/contaminated ● Low pressure circuit fault ● Injector(s) failure/programming	Check fuel level/condition. For fuel system tests, REFER to: Fuel Charging and Controls (303-04B Fuel Charging and Controls - 2.0L Duratorq-TDCi/2.2L Duratorq-TDCi (110kW/150PS) - Puma, Diagnosis and Testing). Check the injector programming using the Jaguar approved diagnostic system.
Lack of power when accelerating	● Air intake circuit fault ● Catalyst blocked ● Low fuel pressure ● EGR valve fault ● Turbocharger fault	For fuel system tests, REFER to: Fuel Charging and Controls (303-04B Fuel Charging and Controls - 2.0L Duratorq-TDCi/2.2L Duratorq-TDCi (110kW/150PS) - Puma, Diagnosis and Testing). For exhaust system tests, REFER to: Exhaust System (309-00 Exhaust System, Diagnosis and Testing). For EGR tests, REFER to: Engine Emission Control (303-08 Engine Emission Control - 2.0L Duratorq-TDCi/2.2L Duratorq-TDCi (110kW/150PS) - Puma, Diagnosis and Testing). For turbocharger tests, REFER to: Turbocharger (303-04C Fuel Charging and Controls - Turbocharger, Diagnosis and Testing).
Engine stops/stalls	● Low/contaminated fuel ● Low pressure circuit fault ● Fuel metering valve blocked/contaminated ● Fuel metering valve leak ● High pressure leak	Check fuel level/condition. For fuel system tests, REFER to: Fuel Charging and Controls (303-04B Fuel Charging and Controls - 2.0L Duratorq-TDCi/2.2L Duratorq-TDCi (110kW/150PS) - Puma, Diagnosis and Testing).
Engine judders	● Low/contaminated fuel ● Low pressure circuit fault ● Fuel metering valve blocked/contaminated ● Fuel metering valve leak ● High pressure leak ● Pump fault	Check fuel level/condition. For fuel system tests, REFER to: Fuel Charging and Controls (303-04B Fuel Charging and Controls - 2.0L Duratorq-TDCi/2.2L Duratorq-TDCi (110kW/150PS) - Puma, Diagnosis and Testing).
Excessive fuel consumption	● Low pressure circuit fault ● Fuel metering valve leak ● Fuel temperature sensor leak ● High pressure leak ● Injector(s) failure/programming	Check fuel level/condition. For fuel system tests, REFER to: Fuel Charging and Controls (303-04B Fuel Charging and Controls - 2.0L Duratorq-TDCi/2.2L Duratorq-TDCi (110kW/150PS) - Puma, Diagnosis and Testing).

DTC index (for a full list of DTCs for both petrol and diesel engines, refer to sections 303.14 A or B)

DTC	Condition	Possible source	Action
P0441	Evaporative emissions system, incorrect purge flow	• Canister purge pipe; restricted, leaking or disconnected • Canister vent restricted • Canister purge pipes to engine; restricted, leaking or disconnected • Canister purge valve failure	For evaporative emissions system tests, REFER to: Evaporative Emissions - 2.0L NA V6 - AJV6 (303-13 Evaporative Emissions, Diagnosis and Testing) / Evaporative Emissions - 2.5L NA V6 - AJV6/3.0L NA V6 - AJ27 (303-13 Evaporative Emissions, Diagnosis and Testing).
P0444	Evaporative emissions system canister purge valve circuit; open circuit	• Canister purge valve disconnected • Canister purge valve to ECM drive circuit; open circuit, high resistance • Canister purge valve failure	For evaporative emissions system tests, REFER to: Evaporative Emissions - 2.0L NA V6 - AJV6 (303-13 Evaporative Emissions, Diagnosis and Testing) / Evaporative Emissions - 2.5L NA V6 - AJV6/3.0L NA V6 - AJ27 (303-13 Evaporative Emissions, Diagnosis and Testing).
P0445	Evaporative emissions system canister purge valve circuit; short circuit	• Canister purge valve to ECM drive circuit; short circuit to ground • Canister purge valve failure	For evaporative emissions system tests, REFER to: Evaporative Emissions - 2.0L NA V6 - AJV6 (303-13 Evaporative Emissions, Diagnosis and Testing) / Evaporative Emissions - 2.5L NA V6 - AJV6/3.0L NA V6 - AJ27 (303-13 Evaporative Emissions, Diagnosis and Testing).
P0460	Fuel level sensor range/performance	• ECM software level • Fuel level sensor • Fuel level sensor circuit • Instrument cluster	Refer to technical bulletin A310-02. For fuel level sensor circuit tests, GO to Pinpoint Test A.
P1234	No fuel pump commands received by ECM	• ECM to fuel pump control module and/or feedback circuits: open circuit, short circuit, high resistance • Fuel pump control module failure	For fuel pump module circuit tests, GO to Pinpoint Test B.
P1236	Fuel pump not activated when requested by the ECM	• ECM to fuel pump control module and/or feedback circuits: open circuit, short circuit, high resistance • Fuel pump control module failure	For fuel pump module circuit tests, GO to Pinpoint Test B.
P1338	Fuel pump feedback circuit high/low voltage	• ECM to fuel pump control module and/or feedback circuits: open circuit, short circuit, high resistance • Fuel pump control module failure	For fuel pump module circuit tests, GO to Pinpoint Test B.
B1202	Fuel level sensor 1 circuit fault	• Fuel level sensor 1 circuit; open circuit	For fuel level sensor circuit tests, GO to Pinpoint Test A.
B1204	Fuel level sensor 1 circuit fault	• Fuel level sensor 1 circuit; short circuit to ground	For fuel level sensor circuit tests, GO to Pinpoint Test A.
B2627	Fuel level sensor 2 circuit fault	• Fuel level sensor 1 circuit; open circuit	For fuel level sensor circuit tests, GO to Pinpoint Test A.
B2628	Fuel level sensor 2 circuit fault	• Fuel level sensor 1 circuit; short circuit to ground	For fuel level sensor circuit tests, GO to Pinpoint Test A.
B2879	Failure to transfer fuel	• Transfer pump malfunction • Internal transfer system	Carry out fuel transfer test, GO to Pinpoint Test C. Refer to bulletin A310-01.

Pinpoint tests

PINPOINT TEST A : P0460, B1202, B1204, B2627, B2628: FUEL LEVEL SENSORS

• NOTE: In the event of a fault with the level sensors, only the relevant module should be replaced. There is no requirement to replace the fuel tank.

TEST CONDITIONS	DETAILS/RESULTS/ACTIONS
A1: CHECK THE FUEL LEVEL SENSOR GROUND CIRCUITS	
	1 Disconnect the fuel level sensor connector(s): Vehicles with 2.5/3.0 L engine, ROW; • FT02 and FT03. Vehicles with 2.5/3.0 L engine, USA; • FT06. Vehicles with 2.0 L petrol engine; • CA415. Vehicles with 2.0/2.2 L diesel engines; • CA415.
	2 Turn the ignition switch to the **ON** position.
	3 Measure the resistance between: Vehicles with 2.5/3.0 L engine, ROW; • FT02, pin 03 (B) and GROUND. • FT03, pin 03 (B) and GROUND. Vehicles with 2.5/3.0 L engine, USA;

	• FT06, pin 02 (B) and GROUND. • FT06, pin 04 (B) and GROUND. Vehicles with 2.0 L petrol; • CA415, pin 04 (B) and GROUND. Vehicles with 2.0 /2.2 L diesel engines; • CA415, pin 04 (B) and GROUND.
	Is the resistance greater than 5 ohms? **Yes** REPAIR the high resistance circuit. For additional information, refer to the wiring diagrams. CLEAR the DTC, test the system for normal operation. **No** GO to A2.
A2: CHECK THE FUEL LEVEL SENSOR SIGNAL CIRCUIT FOR HIGH RESISTANCE	
	1 Disconnect the Instrument cluster connector, IP10.
	2 Measure the resistance between IP10, pin 07 (WU) and: Vehicles with 2.5/3.0 L engine, ROW; • FT02, pin 01 (WU). Vehicles with 2.5/3.0 L engine, USA; • FT06, pin 03 (WU). Vehicles with 2.0 L petrol; • CA415, pin 02 (WB). Vehicles with 2.0/2.2 L diesel engines; • CA415, pin 02 (WB).
	Is the resistance greater than 5 ohms? **Yes** REPAIR the high resistance circuit. For additional information, refer to the wiring diagrams. CLEAR the DTC, test the system for normal operation. **No** GO to A3.
A3: CHECK THE FUEL LEVEL SENSOR SIGNAL CIRCUIT FOR SHORT CIRCUIT TO GROUND	
	1 Measure the resistance between; Vehicles with 2.5/3.0 L engine, ROW; • FT02, pin 01 (WU) and GROUND. Vehicles with 2.5/3.0 L engine, USA; • FT06, pin 03 (WU) and GROUND. Vehicles with 2.0 L petrol engine; • CA415, pin 02 (WB) and GROUND. Vehicles with 2.0/2.2 L diesel engines; • CA415, pin 02 (WB) and GROUND.
	Is the resistance less than 10,000 ohms? **Yes** REPAIR the short circuit. For additional information, refer to the wiring diagrams. CLEAR the DTC, test the system for normal operation. **No** GO to A4.
A4: CHECK THE FUEL LEVEL SENSOR (2) SIGNAL CIRCUIT FOR HIGH RESISTANCE	
• NOTE: Vehicles with 2.0 L petrol or 2.0/2.2 L diesel engines are only fitted with one sensor.	
	1 Measure the resistance between IP10 pin 08 (WB) and: Vehicles with 2.5/3.0 L engine, ROW; • FT03, pin 01 (WB). Vehicles with 2.5/3.0 L engine, USA; • F06, pin 05 (WB).
	Is the resistance greater than 5 ohms? **Yes** REPAIR the high resistance circuit. For additional information, refer to the wiring diagrams. CLEAR the DTC, test the system for normal operation. **No** GO to A6.
A5: CHECK THE FUEL LEVEL SENSOR (2) SIGNAL CIRCUIT FOR SHORT CIRCUIT TO GROUND	
	1 Measure the resistance between; Vehicles with 2.5/3.0 L engine, ROW; • FT03, pin 01 (WB) and GROUND. Vehicles with 2.5/3.0 L engine, USA;

	• F06, pin 05 (WB) and GROUND.
	Is the resistance less than 10,000 ohms? **Yes** REPAIR the short circuit. For additional information, refer to the wiring diagrams. CLEAR the DTC, test the system for normal operation. **No** GO to A6.
A6: CHECK THE FUEL LEVEL SENSOR RANGE	
	1 Measure the resistance between: Vehicles with 2.5/3.0 L engine, ROW; • Pins 01 and 03 of the fuel pump module at FT02. Vehicles with 2.5/3.0 L engine, USA; • Pins 03 and 04 of the fuel pump module. Vehicles with 2.0 L petrol engine; • Pins 02 and 04 of the fuel pump module/level sensor. Vehicles with 2.0/2.2 L diesel engine; • Pins 02 and 04 of the fuel pump module/level sensor.
	Is the resistance between 11 ohms and 165 ohms? **Yes** **Vehicles with 2.0 L petrol or 2.0/2.2 L diesel engines**, Reflash the engine control module using the Jaguar approved diagnostic system, **Vehicles with 2.5/3.0 L engine**GO to A7. **No** INSTALL a new fuel level sensor. REFER to: Fuel Level Sensor - 2.0L Duratorq-TDCi/2.2L Duratorq-TDCi (110kW/150PS) - Puma (310-01 Fuel Tank and Lines, Removal and Installation). INSTALL a new fuel pump module, REFER to: Fuel Pump Module - 2.0L NA V6 - AJV6 (310-01 Fuel Tank and Lines, Removal and Installation) / Fuel Pump Module - 2.5L NA V6 - AJV6/3.0L NA V6 - AJ27 (310-01 Fuel Tank and Lines, Removal and Installation) / Fuel Pump Module - 2.0L NA V6 - AJV6 (310-01 Fuel Tank and Lines, Removal and Installation). CLEAR the DTC, test the system for normal operation.
A7: CHECK THE FUEL LEVEL SENSOR (2) RANGE	
• NOTE: Vehicles with 2.0 L petrol or 2.0/2.2 L diesel engines are only fitted with one sensor.	
	1 Measure the resistance between: Vehicles with 2.5/3.0 L engine, ROW; • Pins 01 and 03 of the fuel level sensor at FT03. Vehicles with 2.5/3.0 L engine, USA; • Pins 02 and 05 of the fuel level sensor.
	Is the resistance between 11 ohms and 165 ohms? **Yes** Reflash the engine control module using the Jaguar approved diagnostic system. **No** INSTALL a new fuel transfer pump module, REFER to: Fuel Transfer Pump (310-01 Fuel Tank and Lines, Removal and Installation). CLEAR the DTC, test the system for normal operation.

PINPOINT TEST B : P1234, P1236, P1338: FUEL PUMP CONTROL MODULE

TEST CONDITIONS	DETAILS/RESULTS/ACTIONS
B1: CHECK THE POWER SUPPLY TO THE FUEL PUMP MODULE	
	1 Disconnect the fuel pump module connector, CA105.
	2 Turn the ignition switch to the **ON** position.
	3 Measure the voltage between CA105, pin 09 (NG) and GROUND.
	Is the voltage greater than 10 volts? **Yes** GO to B2. **No** REPAIR the circuit between CA105 pin 09 (NG) and the ignition switch. This circuit includes the passenger junction box (fuse 17), ignition relay, and the inertia switch. For additional information, refer to the wiring diagrams. CLEAR the DTC, test the system for normal operation.
B2: CHECK THE GROUND CIRCUIT TO THE FUEL PUMP MODULE	
	1 Measure the resistance between CA105, pin 02 (B) and GROUND.
	Is the resistance greater than 5 ohms? **Yes** REPAIR the high resistance circuit. For additional information, refer to the wiring diagrams. CLEAR the DTC, test the system for normal operation. **No** GO to B3.
B3: CHECK THE SIGNAL GROUND CIRCUIT TO THE FUEL PUMP MODULE	
• NOTE: This test would be necessary if there were an EMC (Electro Magnetic Compatibility) issue with the vehicle.	
	1 Turn the ignition switch to the **CRANK** position.
	2 Measure the resistance between CA105, pin 04 (BG) and GROUND.
	Is the resistance greater than 5 ohms? **Yes** REPAIR the high resistance circuit. This circuit includes the ECM. For additional information, refer to the wiring diagrams. CLEAR the DTC, test the system for normal operation. ()

	No GO to B4.
B4: CHECK THE POWER SUPPLY CIRCUIT TO THE FUEL PUMP	
	1 Reconnect the fuel pump module connector, CA105.
	2 Disconnect the fuel pump connector: Vehicles with 2.5/3.0 L engine, ROW; • FT02. Vehicles with 2.5/3.0 L engine, USA; • FT06.
	3 Turn the ignition switch to the **ON** position.
	4 Measure the voltage between: Vehicles with 2.5/3.0 L engine, ROW; • FT02, pin 02 (R) and GROUND. Vehicles with 2.5/3.0 L engine, USA; • FT06, pin 06 (R) and GROUND.
	Is the voltage less than 10 volts? **Yes** INSTALL a new fuel pump module. REFER to: Fuel Pump Module - 2.0L NA V6 - AJV6 (310-01 Fuel Tank and Lines, Removal and Installation) / Fuel Pump Module - 2.5L NA V6 - AJV6/3.0L NA V6 - AJ27 (310-01 Fuel Tank and Lines, Removal and Installation). CLEAR the DTC, test the system for normal operation. **No** GO to B5.
B5: CHECK THE SIGNAL GROUND CIRCUIT FOR CONTINUITY	
	1 Disconnect the fuel pump module connector, CA105.
	2 Measure the resistance between CA105, pin 03 (Y) and: Vehicles with 2.5/3.0 L engine, ROW; • FT02, pin 04 (Y). Vehicles with 2.5/3.0 L engine, USA; • FT06, pin 01 (Y).
	Is the resistance greater than 5 ohms? **Yes** REPAIR the high resistance circuit. For additional information, refer to the wiring diagrams. CLEAR the DTC, test the system for normal operation. **No** INSTALL a new fuel pump module. REFER to: Fuel Pump Module - 2.0L NA V6 - AJV6 (310-01 Fuel Tank and Lines, Removal and Installation) / Fuel Pump Module - 2.5L NA V6 - AJV6/3.0L NA V6 - AJ27 (310-01 Fuel Tank and Lines, Removal and Installation). CLEAR the DTC, test the system for normal operation.

PINPOINT TEST C : FUEL TRANSFER TEST

WARNING: Use extreme care when carrying out the fuel transfer test not to endanger other road users or infringe any road traffic regulations. Ideally, this should be carried out away from public roads.

• NOTE: Make sure the fuel tank is between one quarter and half full as indicated by the fuel gauge before beginning this test.

• NOTE: If the **'F2****'** value in step 6 of this test is **'255'**, suspect an open or short circuit through the level sensor.

TEST CONDITIONS	DETAILS/RESULTS/ACTIONS
C1: CHECK THE 'F2**' VALUES**	
	1 Turn the ignition switch to the **OFF** position.
	2 Depress the trip button on the indicator stalk and turn the ignition switch to the **ON** position.
	3 Continue to hold the trip button in until **'TEST'** appears on the instrument cluster display.
	4 Release the trip button.
	5 Press the trip button repeatedly until **'F2****'** is displayed (this is the sender value of the transfer fuel pump module).
	6 Start the engine and drive the vehicle in a tight right-hand circle to transfer fuel from the fuel pump module side of the fuel tank to the transfer pump module side.
	7 Monitor the **'F2****'** value (with assistance, if necessary), and once the value is greater than 60, bring the vehicle to rest.
	8 Monitor the **'F2****'** value over approximately 3 minutes.
	Does the **'F2****'** value decrease steadily? **Yes** If the **'F2****'** value decreases steadily, this indicates that fuel is transferring. **No** If the **'F2****'** value does not decrease, or increases, return to the symptom chart and follow the actions listed for 'engine stops with fuel indicated on the gauge'.

PINPOINT TEST D : FUEL PUMP NOISE (VEHICLES WITH 2.5/3.0L ENGINES ONLY)

• NOTE: A certain amount of 'swishing' from the fuel tank is normal as fuel is transferred around the fuel modules.

TEST CONDITIONS	DETAILS/RESULTS/ACTIONS
D1: VERIFY THAT THE FUEL PUMP IS THE SOURCE OF THE NOISE	
	1 Apply the parking brake.

	2 Make sure the gear selector is in the **NEUTRAL** position for vehicles fitted with manual transmission, **PARK** position for vehicles fitted with automatic transmission.
	3 Start the engine and allow to idle.
	4 While the engine is idling, disconnect the main tank harness and monitor the noise (the engine will continue to run briefly to allow this test to be performed).
	Does the noise continue? **Yes** The noise is not caused by the fuel pumps. Clear any DTCs, recheck the system. **No** INSTALL a new fuel pump module, REFER to: Fuel Pump Module - 2.5L NA V6 - AJV6/3.0L NA V6 - AJ27 (310-01 Fuel Tank and Lines, Removal and Installation). CLEAR any DTCs, test the system for normal operation.

PINPOINT TEST E : FUEL STARVATION

TEST CONDITIONS	DETAILS/RESULTS/ACTIONS
E1: CHECK FUEL PRESSURE	
• NOTE: **Petrol vehicles only.**	
	WARNING: This procedure involves fuel handling. Be prepared for fuel spillage at all times and always observe fuel handling precautions. Failure to follow these instructions may result in personal injury. • NOTE: **Vehicles built to Vin: D86654.** The fuel pressure can be tested using the Jaguar approved diagnostic system datalogger facility, or by the use of a suitable gauge from the schraeder connector on the fuel rail. • NOTE: **Vehicles built from Vin: D86655.** The fuel pressure can be tested using the Jaguar approved diagnostic system datalogger facility, or by the use of a suitable gauge from the schraeder connector on the special tool fitted to the fuel rail. REFER to: Fuel System Pressure Check (310-00 Fuel System - General Information, General Procedures). • NOTE: The fuel pressure should rise to nominal pressure (320 - 380 Kpa [46 - 55 lb/in²]) within 2 seconds of starting. 1 Install the fuel pressure gauge to the fuel Schraeder valve.
	2 Apply the parking brake.
	3 Make sure the gear selector is in the **NEUTRAL** position for vehicles fitted with manual transmission, **PARK** position for vehicles fitted with automatic transmission.
	4 Start the engine. ● Make sure there are no leaks from the gauge connections
	5 Hold the engine at a steady light throttle and monitor the fuel pressure.
	Does the fuel pressure decrease as the throttle is held steady? **Yes** CHECK the following; Visual inspections from this sectionSender function, GO to Pinpoint Test A. If this fails to resolve the issue, install a new fuel pump module, REFER to: Fuel Pump Module - 2.0L NA V6 - AJV6 (310-01 Fuel Tank and Lines, Removal and Installation) / Fuel Pump Module - 2.5L NA V6 - AJV6/3.0L NA V6 - AJ27 (310-01 Fuel Tank and Lines, Removal and Installation). and transfer pump, REFER to: Fuel Transfer Pump (310-01 Fuel Tank and Lines, Removal and Installation). Clean and flush any heavy contamination from the fuel tank. Clear any DTCs, test the system for normal operation. **No** CHECK the ECM for DTCs indicating another cause for the problem.

PINPOINT TEST F : FUEL CONTAMINATION

TEST CONDITIONS	DETAILS/RESULTS/ACTIONS
F1: CHECK FOR THE PRESENCE OF CONTAMINANTS IN THE FUEL	
	1 Extract approximately 1 liter of fuel from the rail into a suitable clear container.
	2 Allow to settle for 2 minutes and check for separation of the fuel into layers.
	Is there visible separation of the fuel? **Yes** REMOVE the fuel tank. Drain off the fuel. Clean and flush the fuel tank and lines. Refill with fresh fuel. Clear any DTCs, test the system for normal operation. **No** CHECK the ECM for DTCs indicating another cause for the problem.

Fuel Tank and Lines - Fuel Filter2.0L Duratorq-TDCi / 2.2L Duratorq-TDCi (110kW / 150PS) - Puma

Removal and Installation

Special Tool(s)	
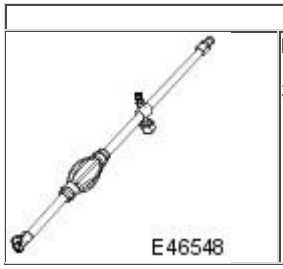	Hand Pressure Pump with Adapter Kit 310-110

Removal

• WARNINGS:

Do not smoke or carry lighted tobacco or open flame of any type when working on or near any fuel related components. Highly flammable mixtures are always present and can ignite. Failure to follow these instructions may result in personal injury.

This procedure involves fuel handling. Be prepared for fuel spillage at all times and always observe fuel handling precautions. Failure to follow these instructions may result in personal injury.

• CAUTIONS:

Diesel fuel injection equipment is manufactured to very precise tolerances and fine clearances. It is therefore essential that absolute cleanliness is observed when working with these components. Always fit blanking plugs to any open orifices or lines.

Always carry out the cleaning process before carrying out any repairs to the fuel injection system components. Failure to follow these instructions may result in foreign matter ingress to the fuel injection system.

1. CAUTION: The generator must be protected from contamination. Failure to follow this instruction may cause premature failure of the generator.

Protect the generator with lint-free material to prevent contamination.

2. Disconnect the fuel pump to fuel filter fuel return line from the fuel filter.
For additional information, refer to: Quick Release Coupling - Push Connect (310-00 Fuel System - General Information, General Procedures).

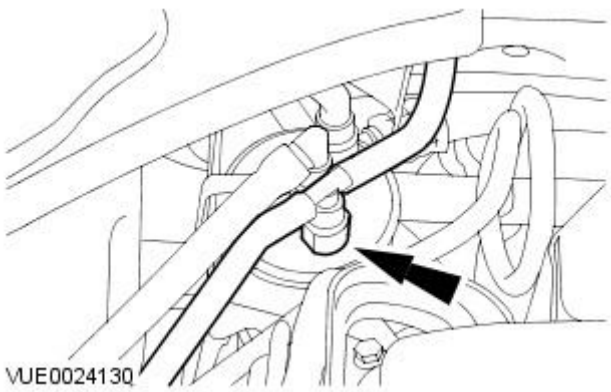

3. Disconnect the fuel tank to fuel filter fuel supply line from the fuel filter.
For additional information, refer to: Quick Release Coupling - Push Connect (310-00 Fuel System - General Information, General Procedures).

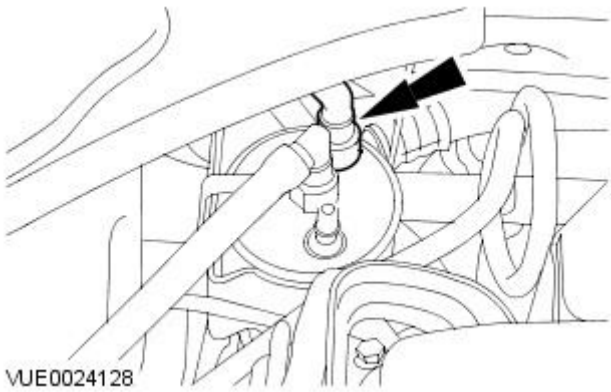

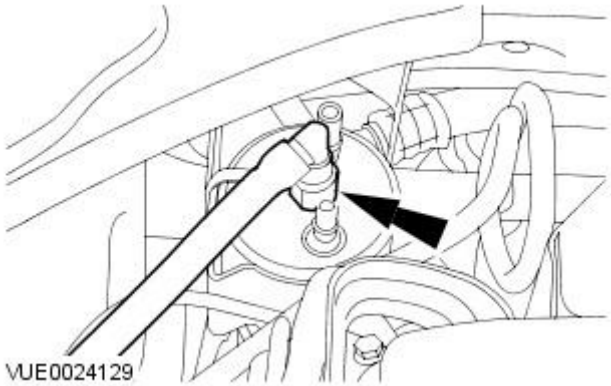

4. Disconnect the fuel filter to fuel pump fuel supply line from the fuel filter.
For additional information, refer to: Quick Release Coupling - Push Connect (310-00 Fuel System - General Information, General Procedures).

- Install a blanking plug to the fuel pump fuel supply line.

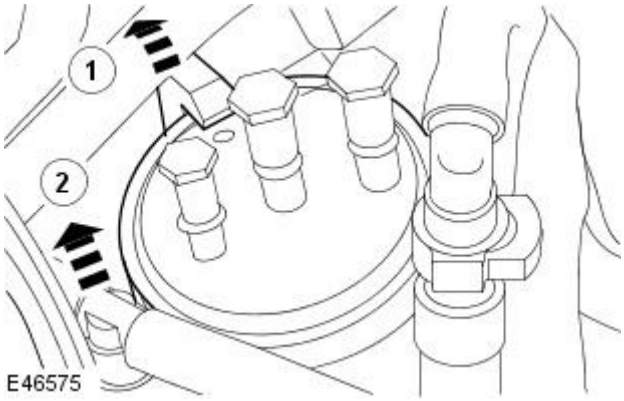

5. Remove the fuel filter

1. Detach the fuel filter retaining clip.
2. Remove the fuel filter.

Installation

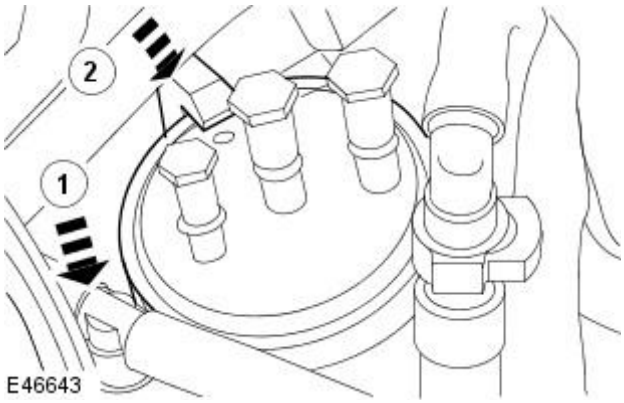

1. WARNINGS:

Do not smoke or carry lighted tobacco or open flame of any type when working on or near any fuel related components. Highly flammable mixtures are always present and can ignite. Failure to follow these instructions may result in personal injury.

This procedure involves fuel handling. Be prepared for fuel spillage at all times and always observe fuel handling precautions. Failure to follow these instructions may result in personal injury.

CAUTION: Diesel fuel injection equipment is manufactured to very precise tolerances and fine clearances. It is therefore essential that absolute cleanliness is observed when working with these components. Always fit blanking plugs to any open orifices or lines.

• NOTE: Make sure that the fuel filter is fully installed into the fuel filter retaining bracket.

Install the fuel filter.

1. Install the fuel filter.
2. Attach the fuel filter retaining clip.

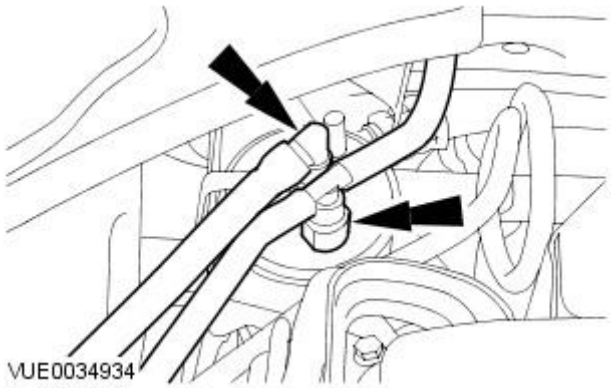

2. Connect the fuel pump to fuel filter fuel supply and fuel return lines to the fuel filter.
For additional information, refer to: Quick Release Coupling - Push Connect (310-00 Fuel System - General Information, General Procedures).

- Remove the blanking plugs.

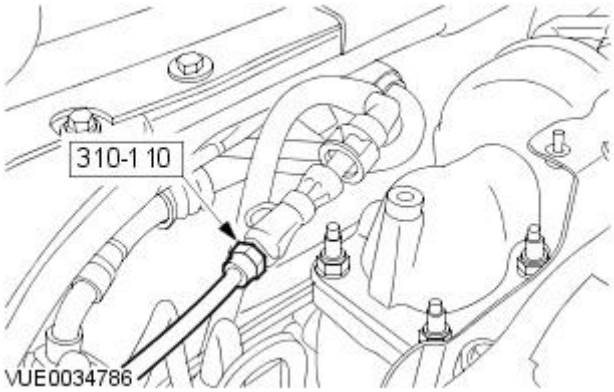

3. NOTE: Make sure that the hand primer arrow indicating the fuel flow is pointing towards the fuel filter.

Install the hand pressure pump special tool between the fuel filter and the fuel filter fuel supply line.

4. NOTE: Once the hand pressure pump special tool bellow has become firm hold the pressure for five minutes.

Operate the hand pressure pump special tool until fuel starts to flow through the fuel filter and the special tool becomes firm.

5. Remove the hand pressure pump special tool.

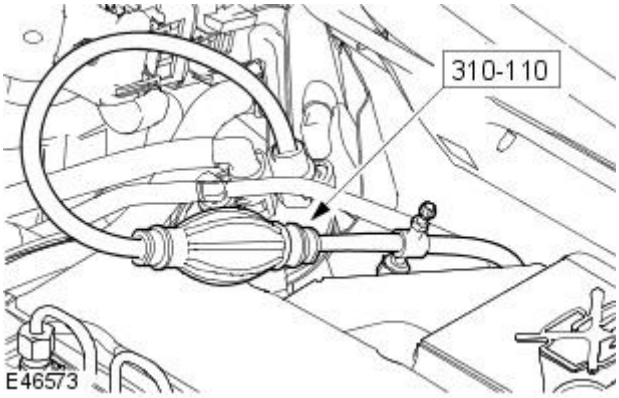

6. Connect the fuel tank to fuel filter fuel supply line to the fuel filter. For additional information, refer to: Quick Release Coupling - Push Connect (310-00 Fuel System - General Information, General Procedures).

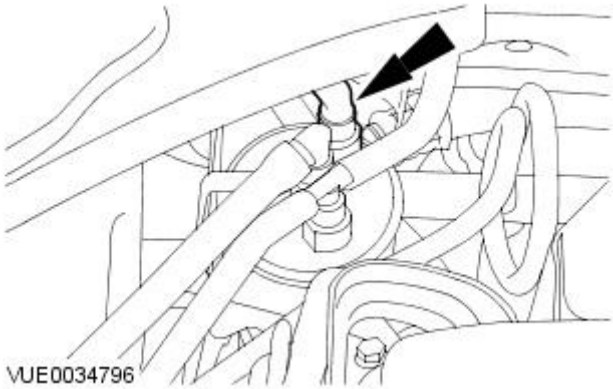

7. Remove the lint-free material from the generator.

Fuel Tank and Lines - Fuel Filter2.0L NA V6 - AJV6 / 2.5L NA V6 - AJV6 / 3.0L NA V6 - AJ27

Removal and Installation

Removal

1. WARNINGS:

Place the vehicle in a quarantined area and arrange "No Smoking/Petrol Fumes" signs about the vehicle.

Do not smoke or carry lighted tobacco or open flame of any type when working on or near any fuel related components. Highly flammable vapors are always present and may ignite. Failure to follow these instructions may result in personal injury.

Do not carry or operate cellular phones when working on or near any fuel related components. Highly flammable vapours are always present and may ignite. Failure to follow these instructions may result in personal injury.

This procedure involves fuel handling. Be prepared for fuel spillage at all times and always observe fuel handling precautions. Failure to follow these instructions may result in personal injury.

Disconnect the battery ground cable. For additional information, refer to Section 414-01 Battery, Mounting and Cables.

2. De-pressurize the fuel system. For additional information, refer to Section 310-00 Fuel System - General Information.

3. Raise and support the vehicle. For additional information, refer to Section 100-02 Jacking and Lifting.

4. Disconnect the fuel line quick release couplings. For additional information, refer to Section 310-00 Fuel System - General Information.

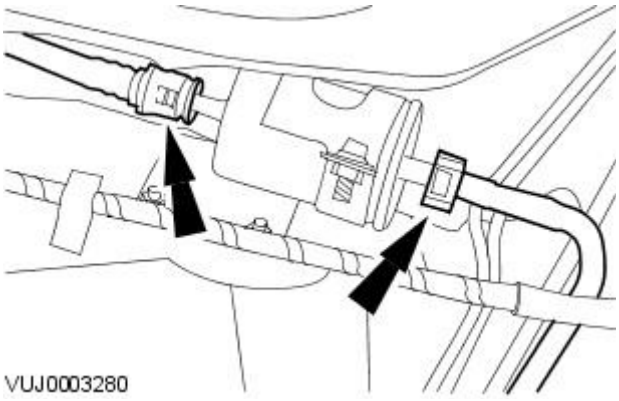

VUJ0003280

5. Remove the fuel filter and bracket assembly.

1. Loosen the fuel filter bracket retaining bolt.
2. Remove the retaining bracket nuts.
3. Remove the fuel filter and bracket assembly.

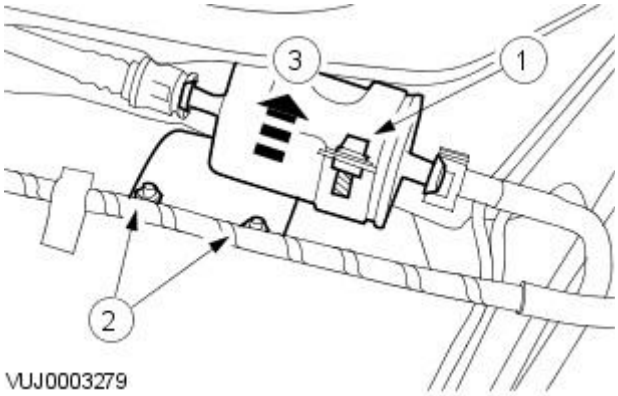

VUJ0003279

6. Remove the fuel filter.

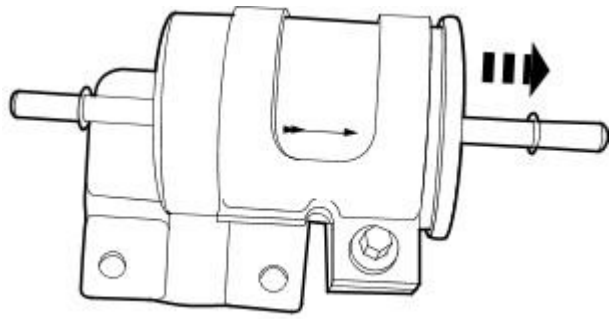

VUJ0003439

Installation

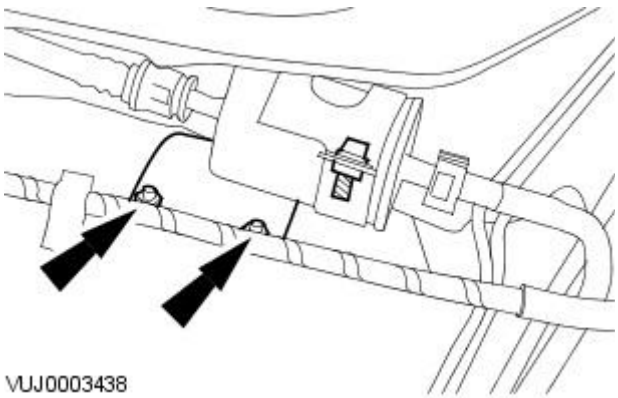

1. WARNINGS:

Do not smoke or carry lighted tobacco or open flame of any type when working on or near any fuel related components. Highly flammable vapors are always present and may ignite. Failure to follow these instructions may result in personal injury.

Do not carry or operate cellular phones when working on or near any fuel related components. Highly flammable vapours are always present and may ignite. Failure to follow these instructions may result in personal injury.

This procedure involves fuel handling. Be prepared for fuel spillage at all times and always observe fuel handling precautions. Failure to follow these instructions may result in personal injury.

• NOTE: Observe the direction of the flow arrow.

To install, reverse the removal procedure.

- Tighten to 4 Nm.

Fuel Tank and Lines - Fuel Level Sender2.0L NA V6 - AJV6

Removal and Installation

Removal

• WARNINGS:

Do not smoke or carry lighted tobacco or an open flame of any type when working on or near any fuel related components. Highly flammable vapors are always present and may ignite. Failure to follow these instructions may result in personal injury.

Do not carry or operate cellular phones when working on or near any fuel related components. Highly flammable vapors are always present and may ignite. Failure to follow these instructions may result in personal injury.

This procedure involves fuel handling. Be prepared for fuel spillage at all times and always observe fuel handling precautions. Failure to follow these instructions may result in personal injury.

1. Remove the fuel pump module.
For additional information, refer to: Fuel Pump Module - 2.0L NA V6 - AJV6 (310-01 Fuel Tank and Lines, Removal and Installation).

2. NOTE: Note the position of the tie straps securing the harness to the fuel pipes.

Remove the tie straps.

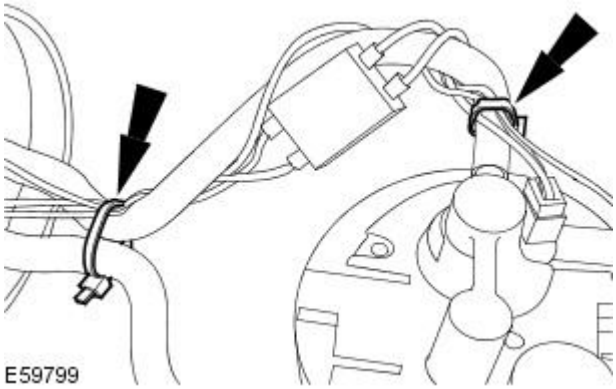

3. NOTE: Vehicle with single electrical connector shown, vehicles with multiple electrical connectors similar.

Disconnect the electrical connector from the fuel pump module flange.

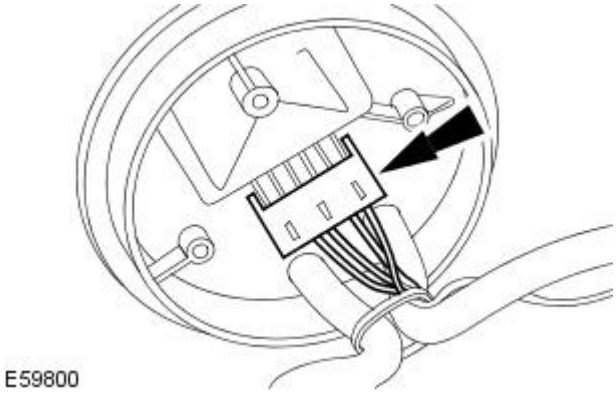

4. Disconnect the electrical connector from the fuel pump.

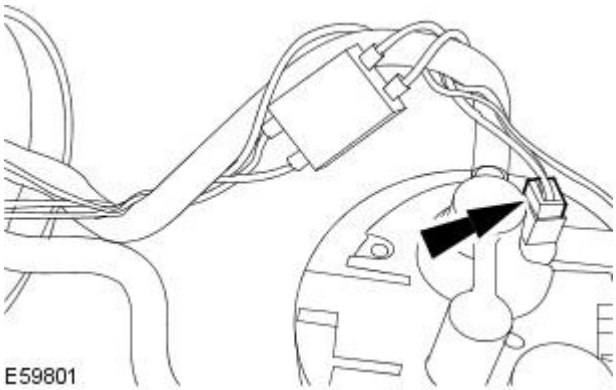

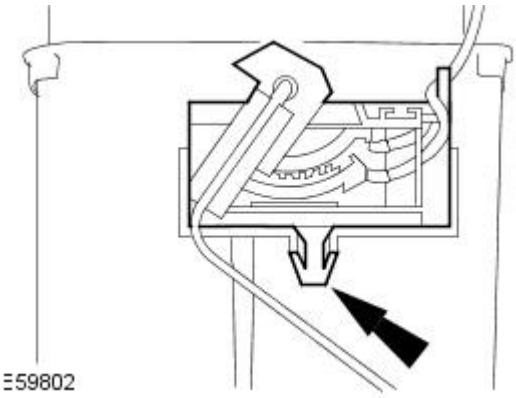

5. Remove the fuel level sender.

Installation

• WARNINGS:

Do not smoke or carry lighted tobacco or an open flame of any type when working on or near any fuel related components. Highly flammable vapors are always present and may ignite. Failure to follow these instructions may result in personal injury.

Do not carry or operate cellular phones when working on or near any fuel related components. Highly flammable vapors are always present and may ignite. Failure to follow these instructions may result in personal injury.

This procedure involves fuel handling. Be prepared for fuel spillage at all times and always observe fuel handling precautions. Failure to follow these instructions may result in personal injury.

CAUTION: Make sure the float or arm are not damaged while installing the fuel pump module.

1. To install, reverse the removal procedure.

Fuel Tank and Lines - Fuel Level Sender2.0L Duratorq-TDCi / 2.2L Duratorq-TDCi (110kW / 150PS) - Puma

Removal and Installation

Removal

• WARNINGS:

Do not smoke or carry lighted tobacco or an open flame of any type when working on or near any fuel related components. Highly flammable vapors are always present and may ignite. Failure to follow these instructions may result in personal injury.

Do not carry or operate cellular phones when working on or near any fuel related components. Highly flammable vapors are always present and may ignite. Failure to follow these instructions may result in personal injury.

This procedure involves fuel handling. Be prepared for fuel spillage at all times and always observe fuel handling precautions. Failure to follow these instructions may result in personal injury.

1. Remove the fuel level sensor.
For additional information, refer to: Fuel Level Sensor - 2.0L Duratorq-TDCi/2.2L Duratorq-TDCi (110kW/150PS) - Puma (310-01 Fuel Tank and Lines, Removal and Installation).

2. NOTE: Note the position of the tie straps securing the harness to the fuel pipes.

Remove the tie straps.

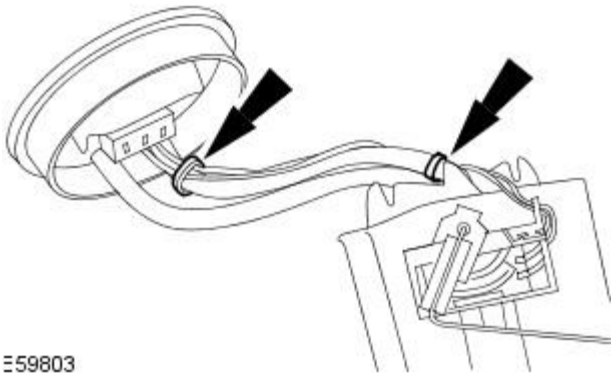

E59803

3. NOTE: Vehicle with single electrical connector shown, vehicles with multiple electrical connectors similar.

Disconnect the electrical connector from the fuel level sensor flange.

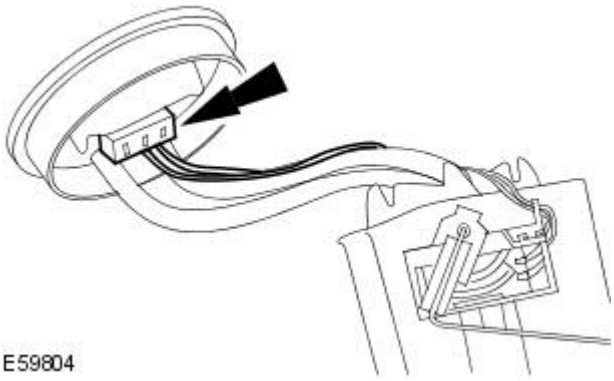

E59804

4. Remove the fuel level sender.

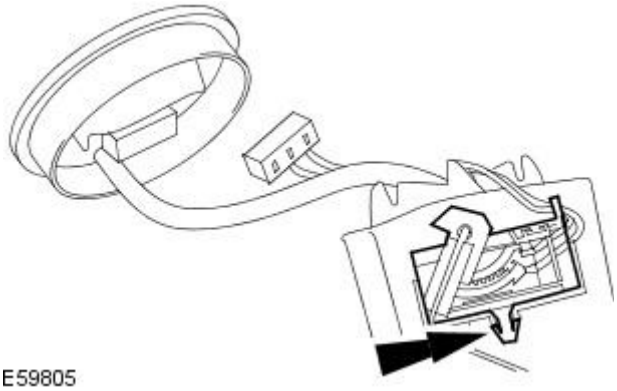

E59805

Installation

• WARNINGS:

Do not smoke or carry lighted tobacco or an open flame of any type when working on or near any fuel related components. Highly flammable vapors are always present and may ignite. Failure to follow these instructions may result in personal injury.

Do not carry or operate cellular phones when working on or near any fuel related components. Highly flammable vapors are always present and may ignite. Failure to follow these instructions may result in personal injury.

This procedure involves fuel handling. Be prepared for fuel spillage at all times and always observe fuel handling precautions. Failure to follow these instructions may result in personal injury.

1. To install, reverse the removal procedure.

Fuel Tank and Lines - Fuel Level Sender LH2.5L NA V6 - AJV6 / 3.0L NA V6 - AJ27

Removal and Installation

Removal

• WARNINGS:

Do not smoke or carry lighted tobacco or an open flame of any type when working on or near any fuel related components. Highly flammable vapors are always present and may ignite. Failure to follow these instructions may result in personal injury.

Do not carry or operate cellular phones when working on or near any fuel related components. Highly flammable vapors are always present and may ignite. Failure to follow these instructions may result in personal injury.

This procedure involves fuel handling. Be prepared for fuel spillage at all times and always observe fuel handling precautions. Failure to follow these instructions may result in personal injury.

1. NOTE: All vehicles.

Remove the transfer pump.
For additional information, refer to: Fuel Transfer Pump (310-01 Fuel Tank and Lines, Removal and Installation).

2. NOTE: Non federal market vehicles only.

Disconnect the fuel level sender electrical connector.

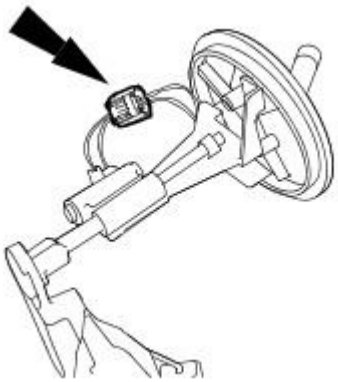

E59829

3. NOTE: Non federal market vehicles only.

Remove the fuel level sender.

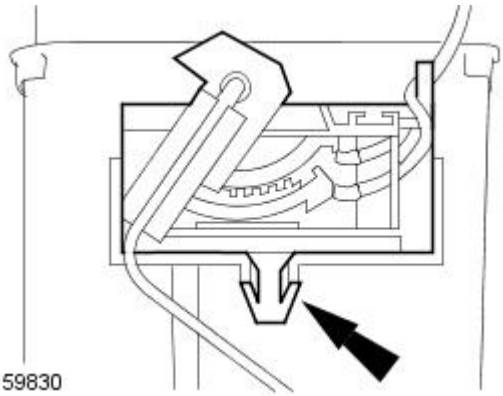

E59830

4. NOTE: Federal market vehicles only.

• NOTE: Note the position of the tie straps securing the harness to the fuel pipes.

Remove the tie straps.

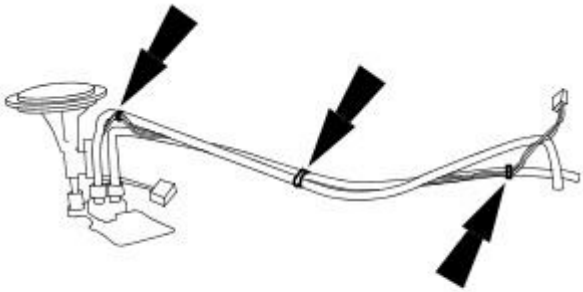

E60159

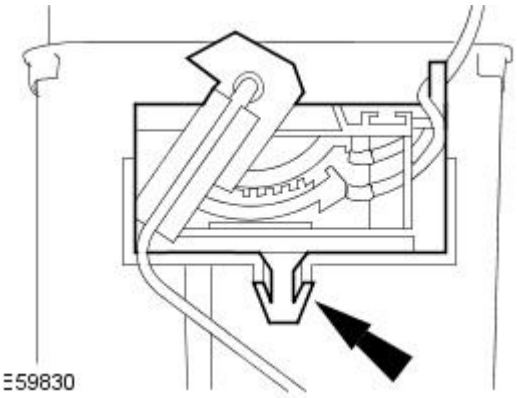

5. NOTE: Federal market vehicles only.

Remove the fuel level sender and harness.

Installation

• WARNINGS:

Do not smoke or carry lighted tobacco or an open flame of any type when working on or near any fuel related components. Highly flammable vapors are always present and may ignite. Failure to follow these instructions may result in personal injury.

Do not carry or operate cellular phones when working on or near any fuel related components. Highly flammable vapors are always present and may ignite. Failure to follow these instructions may result in personal injury.

This procedure involves fuel handling. Be prepared for fuel spillage at all times and always observe fuel handling precautions. Failure to follow these instructions may result in personal injury.

1. To install, reverse the removal procedure.

Fuel Tank and Lines - Fuel Level Sender RH2.5L NA V6 - AJV6 / 3.0L NA V6 - AJ27

Removal and Installation

Removal

• WARNINGS:

Do not smoke or carry lighted tobacco or an open flame of any type when working on or near any fuel related components. Highly flammable vapors are always present and may ignite. Failure to follow these instructions may result in personal injury.

Do not carry or operate cellular phones when working on or near any fuel related components. Highly flammable vapors are always present and may ignite. Failure to follow these instructions may result in personal injury.

This procedure involves fuel handling. Be prepared for fuel spillage at all times and always observe fuel handling precautions. Failure to follow these instructions may result in personal injury.

1. Remove the fuel pump module.
   For additional information, refer to: Fuel Pump Module - 2.5L NA V6 - AJV6/3.0L NA V6 - AJ27 (310-01 Fuel Tank and Lines, Removal and Installation).
2. Disconnect the fuel level sender electrical connector.

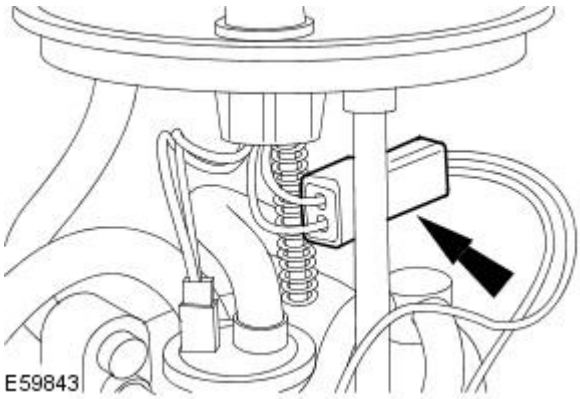

3. Remove the fuel level sender.

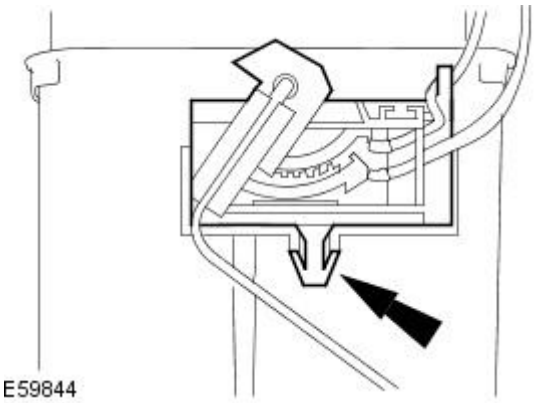

Installation

• WARNINGS:

Do not smoke or carry lighted tobacco or an open flame of any type when working on or near any fuel related components. Highly flammable vapors are always present and may ignite. Failure to follow these instructions may result in personal injury.

Do not carry or operate cellular phones when working on or near any fuel related components. Highly flammable vapors are always present and may ignite. Failure to follow these instructions may result in personal injury.

This procedure involves fuel handling. Be prepared for fuel spillage at all times and always observe fuel handling precautions. Failure to follow these instructions may result in personal injury.

1. To install, reverse the removal procedure.

Fuel Tank and Lines - Fuel Level Sensor2.0L Duratorq-TDCi/2.2L Duratorq-TDCi (110kW/150PS) - Puma

Removal and Installation

Special Tool(s)	
E49162	Remove/Install fuel pump/transfer pump locking ring 310-127

Removal

• WARNINGS:

Do not smoke or carry lighted tobacco or an open flame of any type when working on or near any fuel related components. Highly flammable vapors are always present and may ignite. Failure to follow these instructions may result in personal injury.

Do not carry or operate cellular phones when working on or near any fuel related components. Highly flammable vapors are always present and may ignite. Failure to follow these instructions may result in personal injury.

This procedure involves fuel handling. Be prepared for fuel spillage at all times and always observe fuel handling precautions. Failure to follow these instructions may result in personal injury.

1. Remove the fuel tank.
   For additional information, refer to: Fuel Tank - 2.0L Duratorq-TDCi/2.2L Duratorq-TDCi (110kW/150PS) - Puma (310-01 Fuel Tank and Lines, Removal and Installation).
2. Disconnect the fuel lines.
   For additional information, refer to: Quick Release Coupling - Push Connect (310-00 Fuel System - General Information, General Procedures).

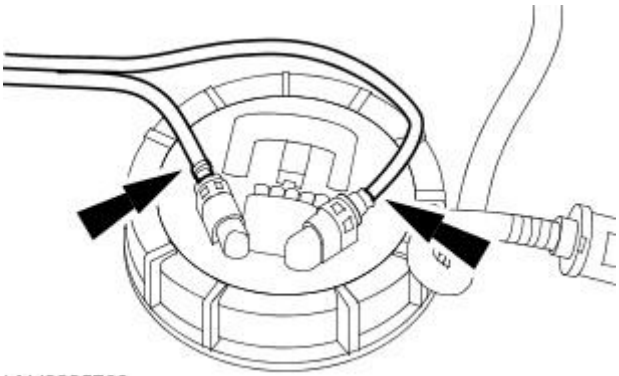

VUJ0005763

3. NOTE: Note the orientation of the fuel level sensor before removal.

   Using the special tool, remove the locking ring.

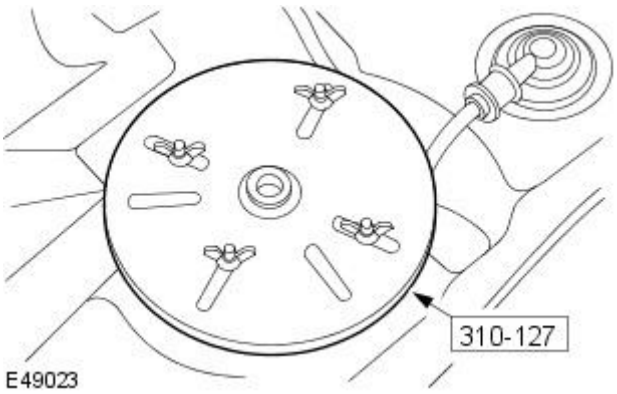

E49023

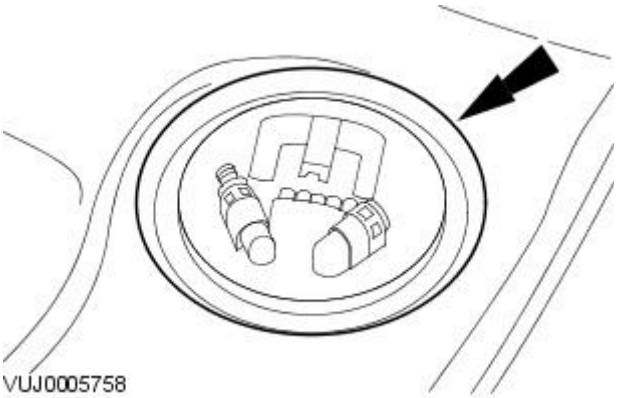

4. Detach the top of the fuel level sensor.

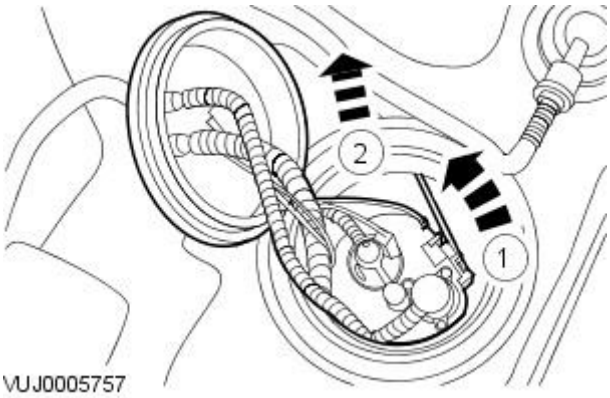

5. CAUTION: Make sure the float or arm are not damaged while removing the fuel level sensor.

Remove the fuel level sensor.

1. Rotate the lower part of the fuel level sensor.
2. Remove the fuel level sensor.

- Remove and discard the seal.

Installation

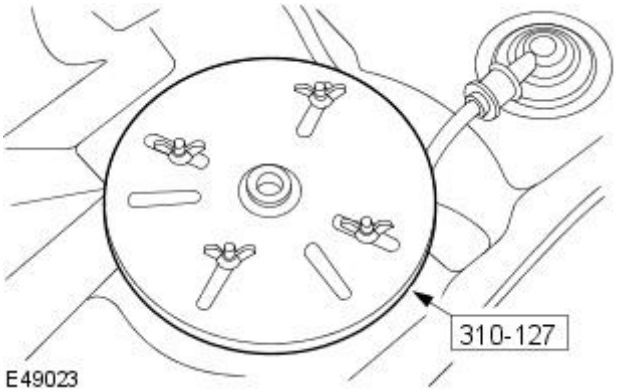

1. WARNINGS:

Do not smoke or carry lighted tobacco or an open flame of any type when working on or near any fuel related components. Highly flammable vapors are always present and may ignite. Failure to follow these instructions may result in personal injury.

Do not carry or operate cellular phones when working on or near any fuel related components. Highly flammable vapors are always present and may ignite. Failure to follow these instructions may result in personal injury.

This procedure involves fuel handling. Be prepared for fuel spillage at all times and always observe fuel handling precautions. Failure to follow these instructions may result in personal injury.

CAUTION: Make sure the float or arm are not damaged while installing the fuel level sensor.

• NOTE: Install a new seal.

• NOTE: Make sure the fuel level sensor is correctly orientated.

To install, reverse the removal procedure.

- Tighten to 85 Nm.

Fuel Tank and Lines - Fuel Pump Module2.0L NA V6 - AJV6

Removal and Installation

Special Tool(s)	
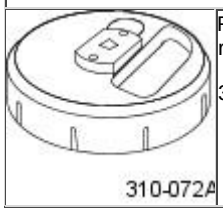	Remove/Install fuel pump/transfer pump locking ring 310-072A

Removal

• WARNINGS:

Do not smoke or carry lighted tobacco or an open flame of any type when working on or near any fuel related components. Highly flammable vapors are always present and may ignite. Failure to follow these instructions may result in personal injury.

Do not carry or operate cellular phones when working on or near any fuel related components. Highly flammable vapors are always present and may ignite. Failure to follow these instructions may result in personal injury.

This procedure involves fuel handling. Be prepared for fuel spillage at all times and always observe fuel handling precautions. Failure to follow these instructions may result in personal injury.

1. Remove the fuel tank.
For additional information, refer to: Fuel Tank - 2.0L NA V6 - AJV6 (310-01 Fuel Tank and Lines, Removal and Installation).

2. Disconnect the fuel lines.
For additional information, refer to: Quick Release Coupling - Push Connect (310-00 Fuel System - General Information, General Procedures).

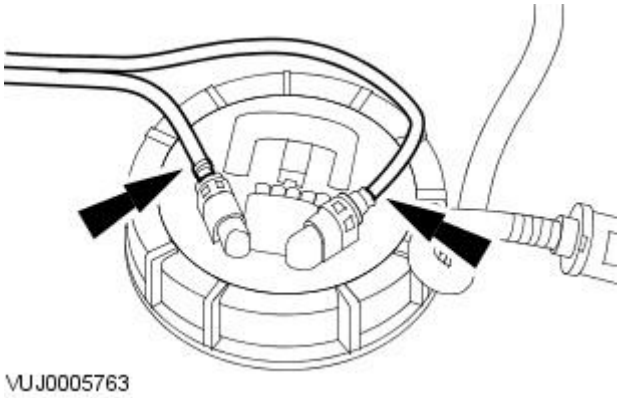

3. NOTE: Note the orientation of the fuel pump module before removal.

Using the special tool, remove the locking ring.

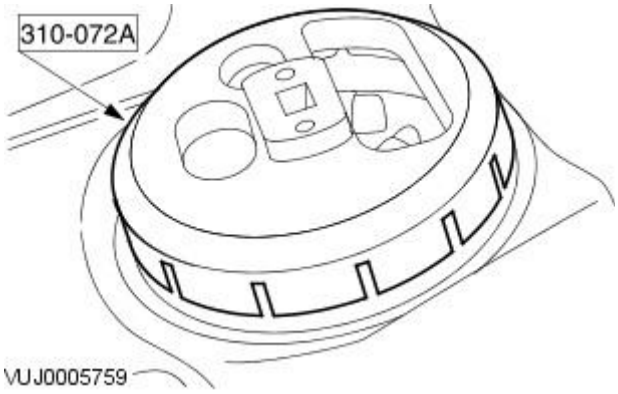

4. Detach the top of the fuel pump module.

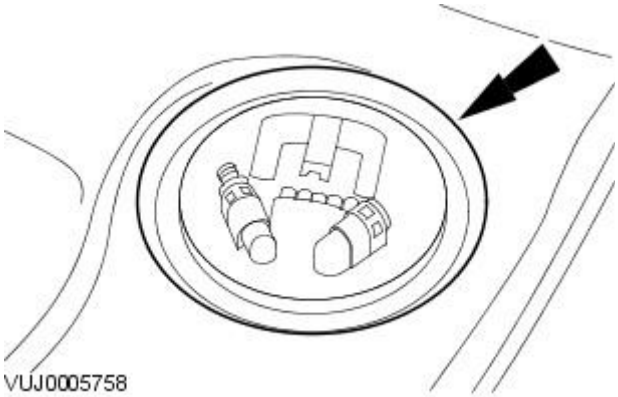

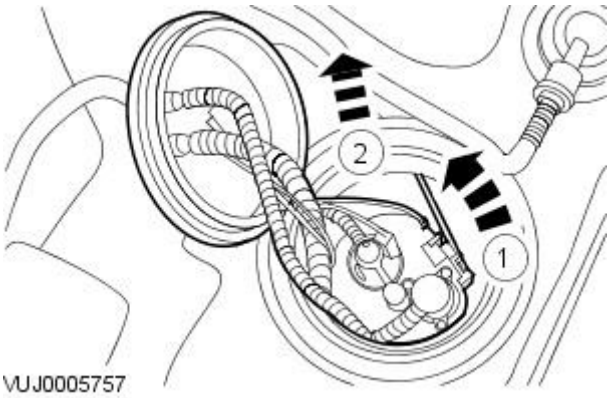

5. CAUTION: Make sure the float or arm are not damaged while removing the fuel pump module.

Remove the fuel pump module.

1. Rotate the lower part of the fuel pump module.
2. Remove the fuel pump module.

- Remove and discard the seal.

Installation

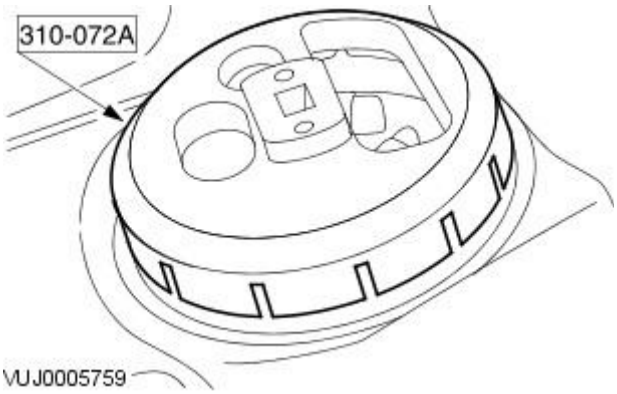

1. WARNINGS:

Do not smoke or carry lighted tobacco or an open flame of any type when working on or near any fuel related components. Highly flammable vapors are always present and may ignite. Failure to follow these instructions may result in personal injury.

Do not carry or operate cellular phones when working on or near any fuel related components. Highly flammable vapors are always present and may ignite. Failure to follow these instructions may result in personal injury.

This procedure involves fuel handling. Be prepared for fuel spillage at all times and always observe fuel handling precautions. Failure to follow these instructions may result in personal injury.

CAUTION: Make sure the float or arm are not damaged while installing the fuel pump module.

• NOTE: Make sure the fuel pump module is correctly orientated.

To install, reverse the removal procedure.

- Install a new seal.
- Tighten to 85 Nm.

Fuel Tank and Lines - Fuel Pump Module2.5L NA V6 - AJV6 / 3.0L NA V6 - AJ27

Removal and Installation

Special Tool(s)	
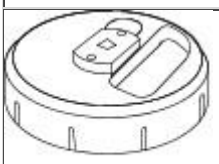	Remove/Install fuel pump/transfer pump locking ring (Non federal market vehicles only) 310-072A
	Remove/Install fuel pump/transfer pump locking ring (Federal market vehicles only) 310-147

Removal

• WARNINGS:

Place the vehicle in a quarantined area and arrange "No Smoking/Petrol Fumes" signs about the vehicle.

Before any work is carried out on the fuel system, ground the vehicle to earth and maintain the ground connection until the work is complete.

Do not smoke or carry lighted tobacco or open flame of any type when working on or near any fuel related components. Highly flammable vapors are always present and may ignite. Failure to follow these instructions may result in personal injury.

The fuel system remains pressurized for a long time after the ignition is switched off. The fuel pressure must be relieved before attempting any repairs. Failure to follow these instructions may result in personal injury.

After carrying out repairs, the fuel system must be checked visually for leaks. Failure to follow these instructions may result in personal injury.

This procedure involves fuel handling. Be prepared for fuel spillage at all times and always observe fuel handling precautions. Failure to follow these instructions may result in personal injury.

If taken internally do not induce vomiting, seek immediate medical attention. Failure to follow these instructions may result in personal injury.

If fuel contacts the eyes, flush the eyes with cold water or eyewash solution and seek medical attention.

Wash hands thoroughly after handling, as prolonged contact may cause irritation. Should irritation develop, seek medical attention.

• NOTE: Non federal market vehicles, refer to steps 1 to 8.

• NOTE: Federal market vehicles, refer to steps 9 to 19.

1. NOTE: Non federal market vehicles only.

Remove the fuel transfer pump.
For additional information, refer to: Fuel Transfer Pump (310-01 Fuel Tank and Lines, Removal and Installation).

2. NOTE: Non federal market vehicles only.

Disconnect the electrical connector.

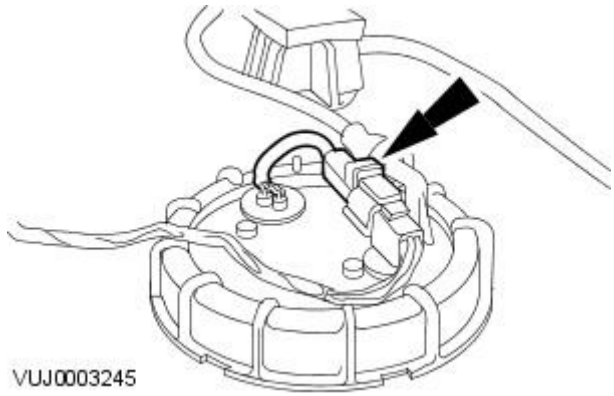

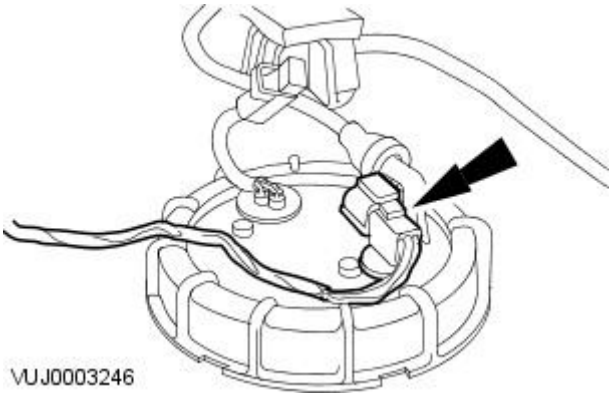

3. NOTE: Non federal market vehicles only.

Detach the electrical connector.

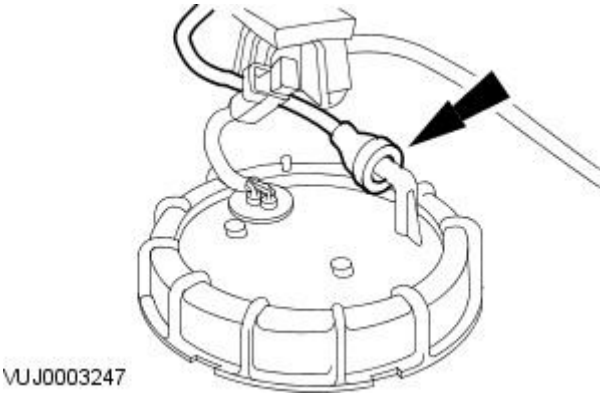

4. NOTE: Non federal market vehicles only.

Disconnect the fuel supply pipe.
For additional information, refer to: Quick Release Coupling - Push Connect (310-00 Fuel System - General Information, General Procedures).

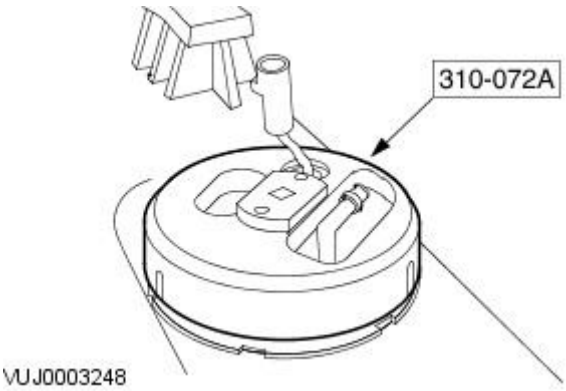

5. NOTE: Non federal market vehicles only.

- NOTE: Note the orientation of the fuel pump module before removal.

Using the special tool, remove the locking ring.

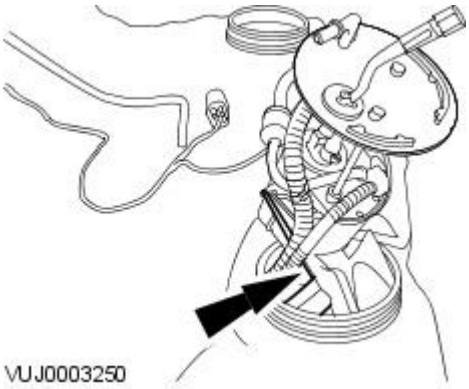

6. CAUTION: Make sure the float or arm are not damaged while removing the fuel pump module.

- NOTE: Non federal market vehicles only.

Guide the fuel pump module through the aperture.

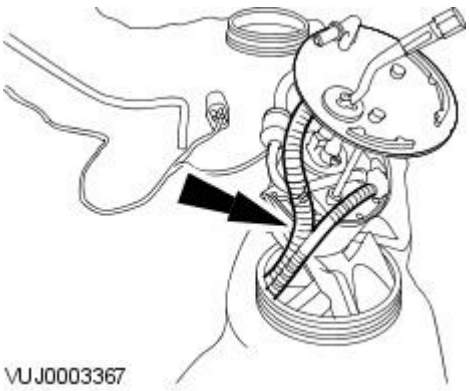

7. CAUTION: Make sure damage to the fuel crossover pipes does not occur.

- NOTE: Non federal market vehicles only.

Guide the crossover pipes through the aperture.

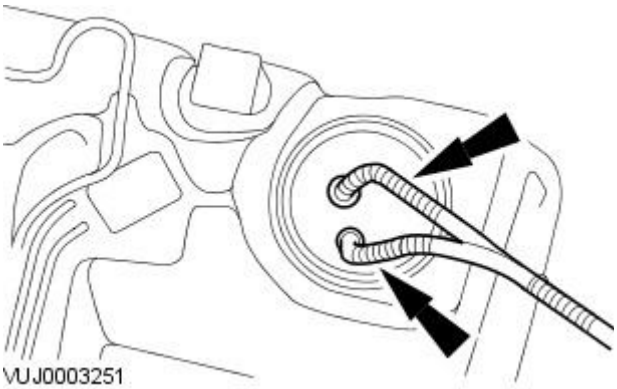

8. NOTE: Non federal market vehicles only.

Remove the fuel pump module and crossover pipes.

- Remove and discard the O-ring seal.

9. NOTE: Federal market vehicles only.

Remove the fuel tank.
For additional information, refer to: Fuel Tank - 2.5L NA V6 - AJV6/3.0L NA V6 - AJ27 (310-01 Fuel Tank and Lines, Removal and Installation).

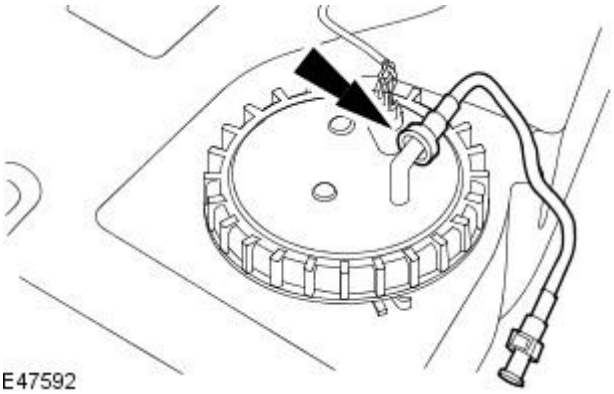

10. NOTE: Federal market vehicles only.

Remove the fuel supply pipe.
For additional information, refer to: Quick Release Coupling - Push Connect (310-00 Fuel System - General Information, General Procedures).

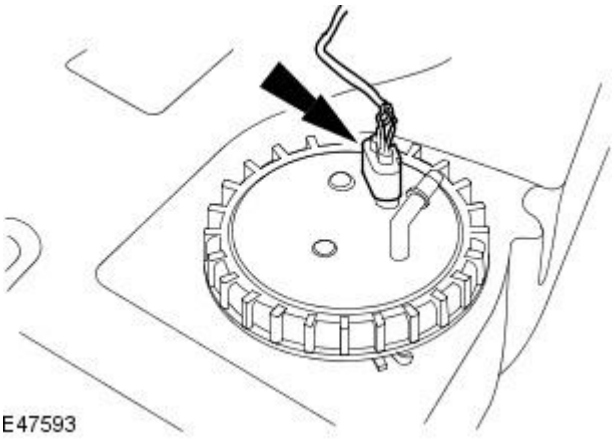

11. NOTE: Federal market vehicles only.

Disconnect the electrical connector.

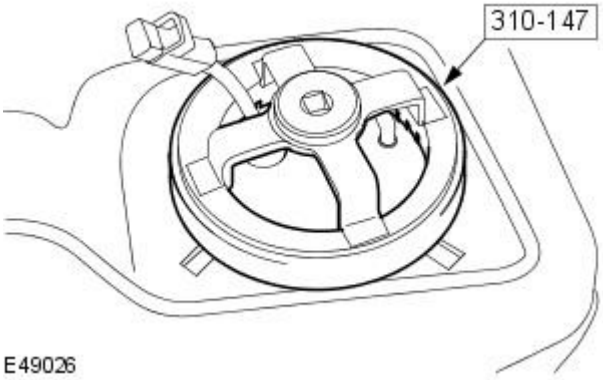

12. NOTE: Federal market vehicles only.

• NOTE: Note the orientation of the fuel pump module before removal.

Using the special tool, remove the locking ring.

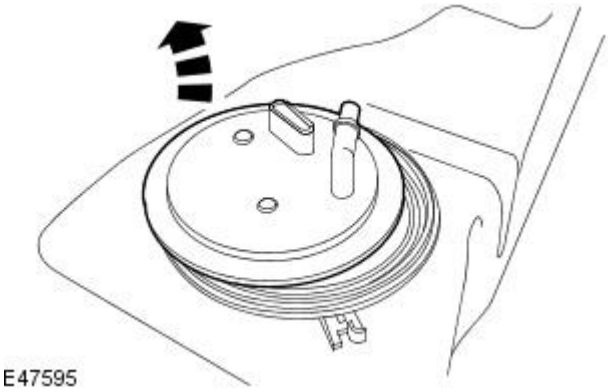

13. NOTE: Federal market vehicles only.

Detach the fuel pump module flange from the fuel pump module base.

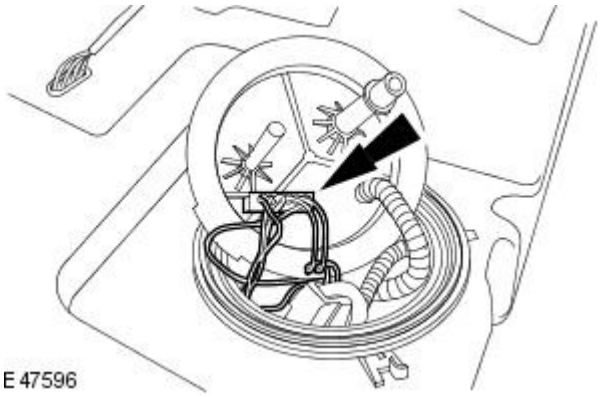

14. NOTE: Federal market vehicles only.

Disconnect the electrical connector.

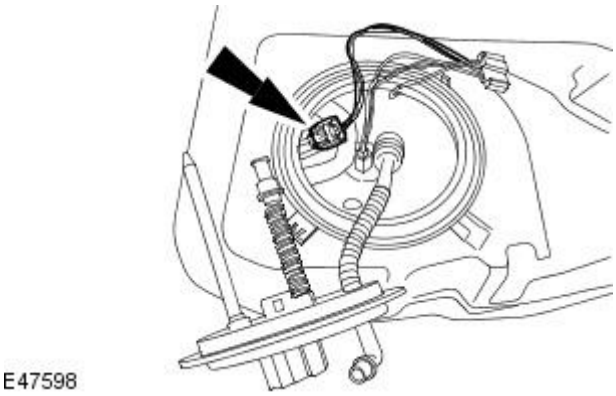

15. NOTE: Federal market vehicles only.

Disconnect the electrical connector.

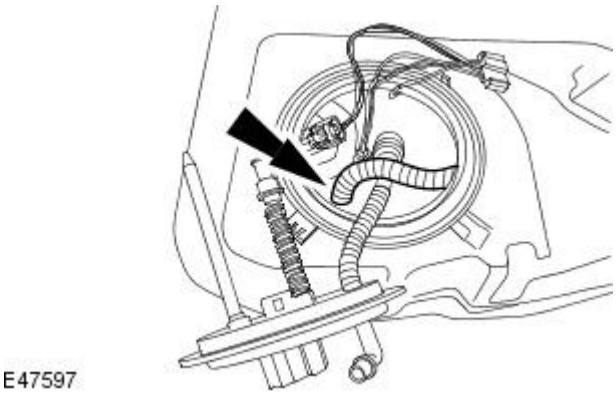

16. Detach the fuel crossover pipe from the fuel pump module base.

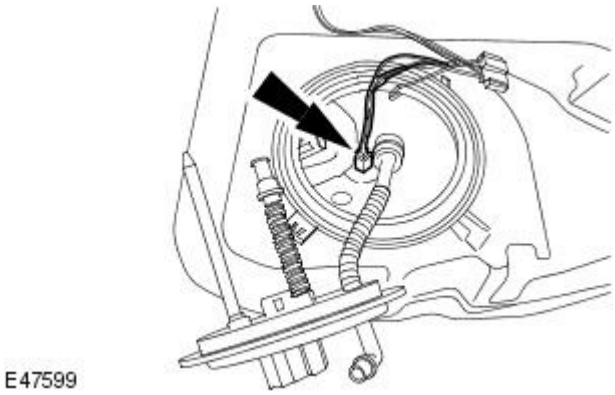

17. NOTE: Federal market vehicles only.

Disconnect the electrical connector.

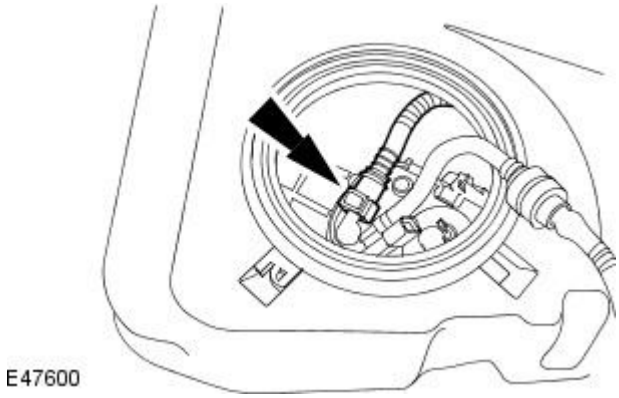

18. NOTE: Federal market vehicles only.

Disconnect the fuel crossover pipe from the fuel pump module base.

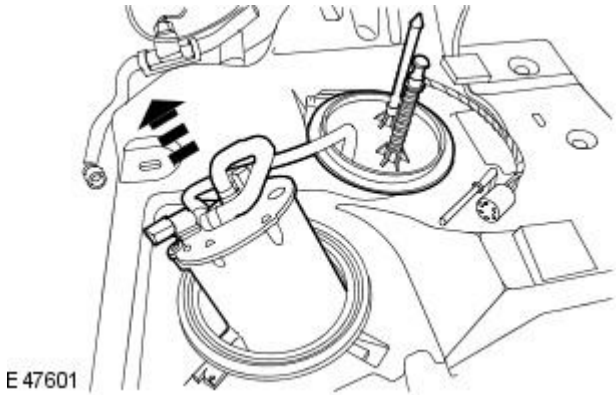

19. CAUTION: Make sure the float or arm are not damaged while removing the fuel pump module.

• NOTE: Federal market vehicles only.

Remove the fuel pump module.

- Remove the fuel pump module base from the fuel tank.

Installation

• WARNINGS:

Place the vehicle in a quarantined area and arrange "No Smoking/Petrol Fumes" signs about the vehicle.

Before any work is carried out on the fuel system, ground the vehicle to earth and maintain the ground connection until the work is complete.

Do not smoke or carry lighted tobacco or open flame of any type when working on or near any fuel related components. Highly flammable vapors are always present and may ignite. Failure to follow these instructions may result in personal injury.

The fuel system remains pressurized for a long time after the ignition is switched off. The fuel pressure must be relieved before attempting any repairs. Failure to follow these instructions may result in personal injury.

After carrying out repairs, the fuel system must be checked visually for leaks. Failure to follow these instructions may result in personal injury.

This procedure involves fuel handling. Be prepared for fuel spillage at all times and always observe fuel handling precautions. Failure to follow these instructions may result in personal injury.

If taken internally do not induce vomiting, seek immediate medical attention. Failure to follow these instructions may result in personal injury.

If fuel contacts the eyes, flush the eyes with cold water or eyewash solution and seek medical attention.

Wash hands thoroughly after handling, as prolonged contact may cause irritation. Should irritation develop, seek medical attention.

• NOTE: Federal market vehicles, refer to step 1.

• NOTE: Non federal market vehicles, refer to step 2.

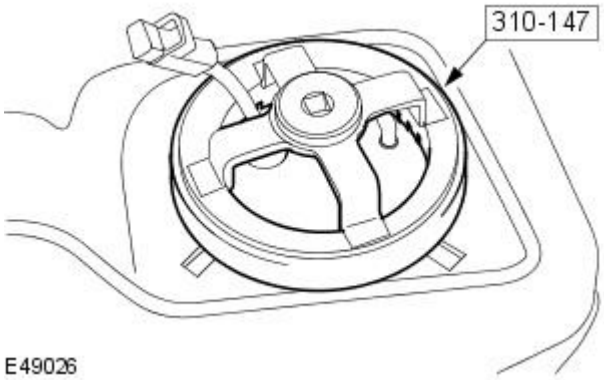

1. CAUTION: Make sure the float or arm are not damaged while installing the fuel pump module.

• NOTE: Federal market vehicles only.

• NOTE: Make sure the fuel pump module is correctly orientated.

To install, reverse the removal procedure.

- Install a new O-ring seal.
- Tighten to 120 Nm.

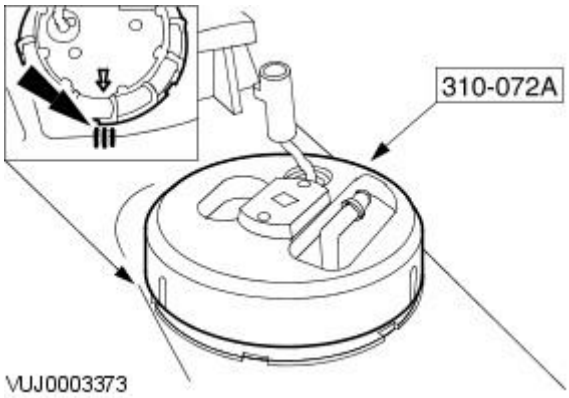

2. CAUTIONS:

Make sure the float or arm are not damaged while installing the fuel pump module.

Make sure the fuel cross over pipes are not damaged while installing the fuel pump module.

• NOTE: Non federal market vehicles only.

• NOTE: Make sure the fuel pump module is correctly orientated.

To install, reverse the removal procedure.

- Install a new O-ring seal.
- Tighten to 70 Nm.

Fuel Tank and Lines - Fuel Tank2.0L NA V6 - AJV6

Removal and Installation

Removal

• WARNINGS:

Place the vehicle in a well ventilated, quarantined area and arrange **No Smoking / Petrol Fumes** signs about the vehicle.

Before any work is carried out on the fuel system, ground the vehicle to earth and maintain the ground connection until the work is complete.

Do not smoke or carry lighted tobacco or an open flame of any type when working on or near any fuel related components. Highly flammable vapors are always present and may ignite. Failure to follow these instructions may result in personal injury.

Do not carry or operate cellular phones when working on or near any fuel related components. Highly flammable vapors are always present and may ignite. Failure to follow these instructions may result in personal injury.

This procedure involves fuel handling. Be prepared for fuel spillage at all times and always observe fuel handling precautions. Failure to follow these instructions may result in personal injury.

1. De-pressurize the fuel system.
   For additional information, refer to: Fuel System Pressure Release (310-00 Fuel System - General Information, General Procedures).
2. Remove the rear seat cushion.
   For additional information, refer to: Rear Seat Cushion (501-10 Seating, Removal and Installation).
3. Detach the wiring harness grommet.

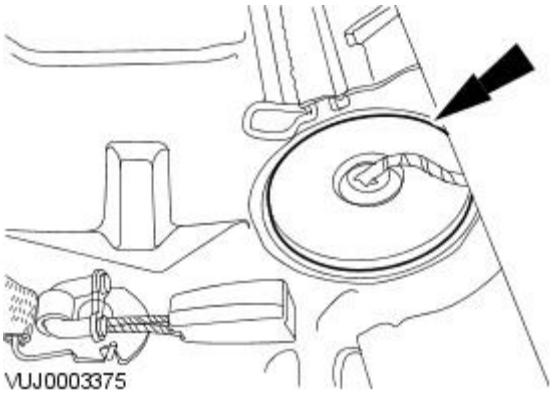

4. Disconnect the electrical connector.

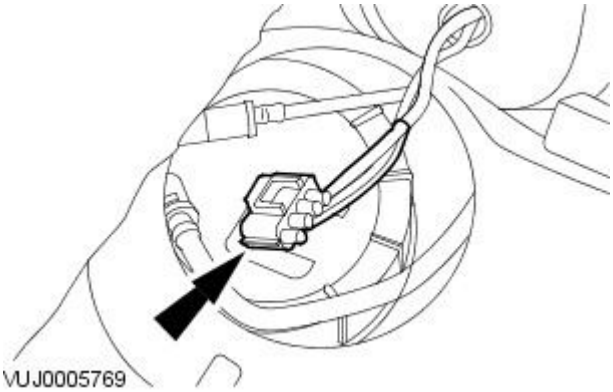

5. Drain the fuel tank.
   For additional information, refer to: Fuel Tank Draining - 2.0L NA V6 - AJV6/2.5L NA V6 - AJV6/3.0L NA V6 - AJ27 (310-00 Fuel System - General Information, General Procedures).
6. Raise and support the vehicle.
   For additional information, refer to: Lifting (100-02 Jacking and Lifting, Description and Operation).

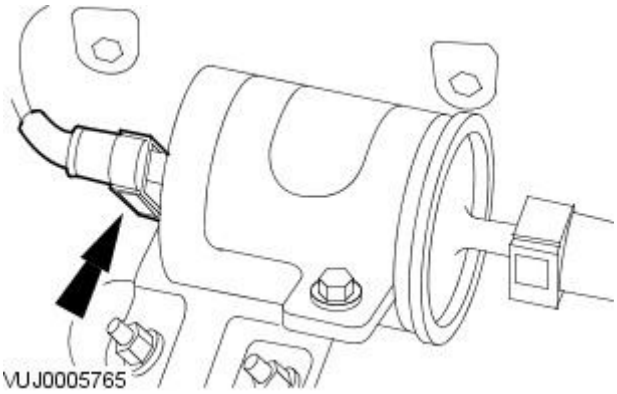

7. Disconnect the fuel filter line quick release coupling.
For additional information, refer to: Quick Release Coupling - Push Connect (310-00 Fuel System - General Information, General Procedures).

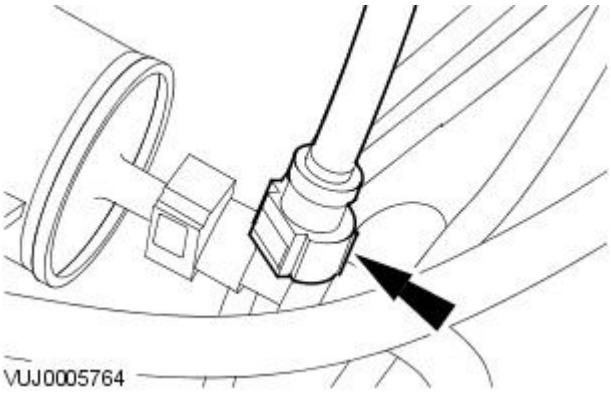

8. Disconnect the fuel filter line quick release coupling.
For additional information, refer to: Quick Release Coupling - Push Connect (310-00 Fuel System - General Information, General Procedures).

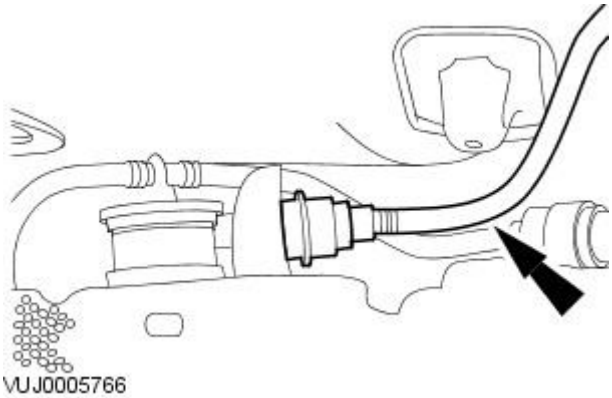

9. Disconnect the evaporative emission canister hose.
For additional information, refer to: Quick Release Coupling - Push Connect (310-00 Fuel System - General Information, General Procedures).

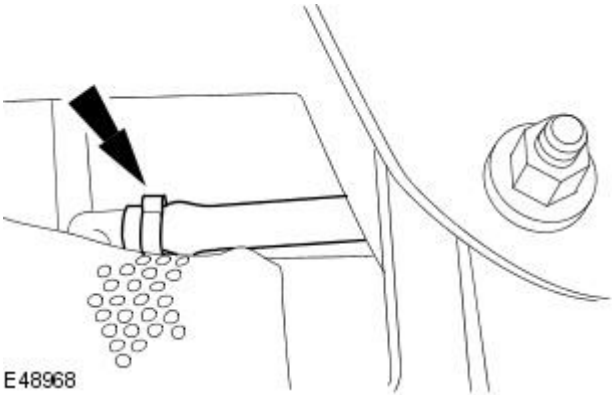

10. Detach the breather hose from the fuel tank.

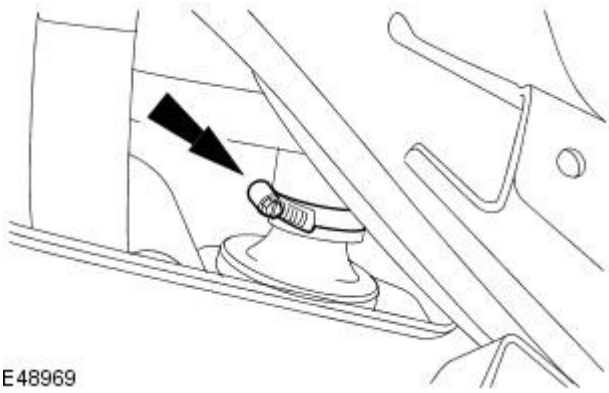

11. NOTE: Note the orientation of the fuel tank filler pipe to fuel tank hose retaining clip before loosening.

Loosen the fuel tank filler pipe to fuel tank hose retaining clip.

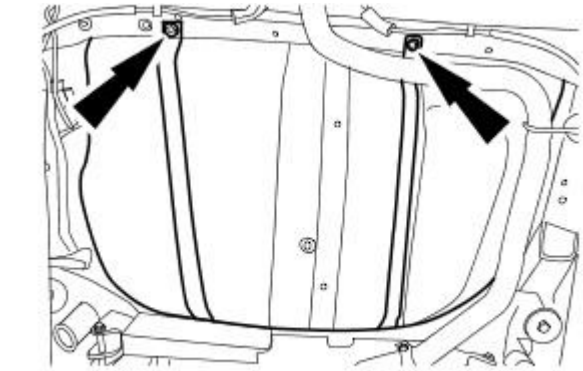
E48970

12. NOTE: An assistant will be required to remove the fuel tank.

Remove the fuel tank.

- Remove the fuel tank support straps.

Installation

• WARNINGS:

Do not smoke or carry lighted tobacco or an open flame of any type when working on or near any fuel related components. Highly flammable vapors are always present and may ignite. Failure to follow these instructions may result in personal injury.

Do not carry or operate cellular phones when working on or near any fuel related components. Highly flammable vapors are always present and may ignite. Failure to follow these instructions may result in personal injury.

This procedure involves fuel handling. Be prepared for fuel spillage at all times and always observe fuel handling precautions. Failure to follow these instructions may result in personal injury.

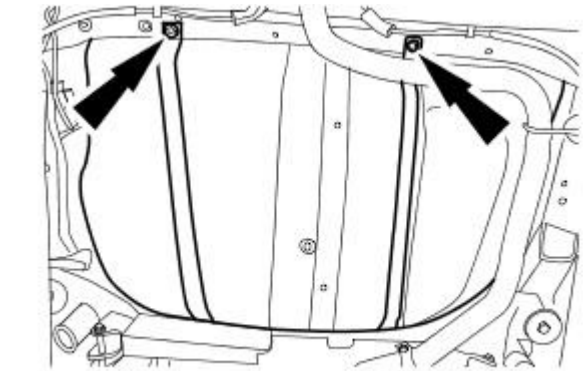
E48970

1. NOTE: An assistant will be required to install the fuel tank.

• NOTE: Make sure the fuel filler pipe hose is connected to the fuel tank as it is installed.

Install the fuel tank.

- Install the fuel tank support straps.
- Tighten to 25 Nm.

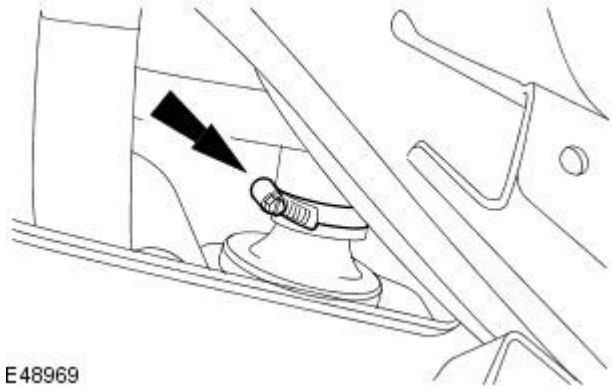
E48969

2. NOTE: Make sure the fuel tank filler pipe to fuel tank hose retaining clip is correctly orientated.

Tighten the fuel tank filler pipe to fuel tank hose retaining clip.

- Tighten to 3 Nm.

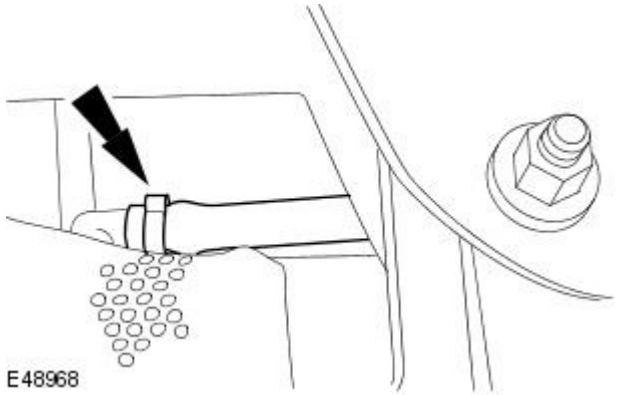
E48968

3. Attach the breather hose from the fuel tank.

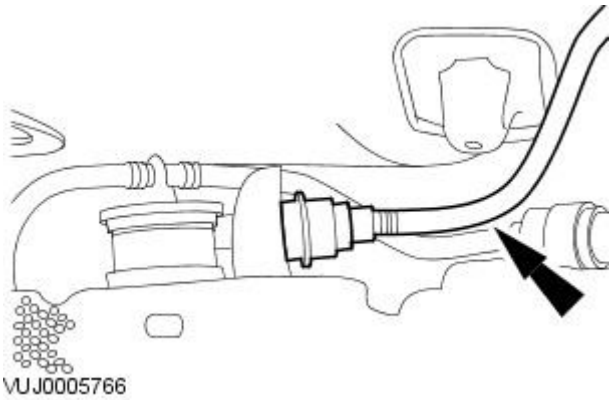

4. Connect the evaporative emission canister hose.
   For additional information, refer to: Quick Release Coupling - Push Connect (310-00 Fuel System - General Information, General Procedures).

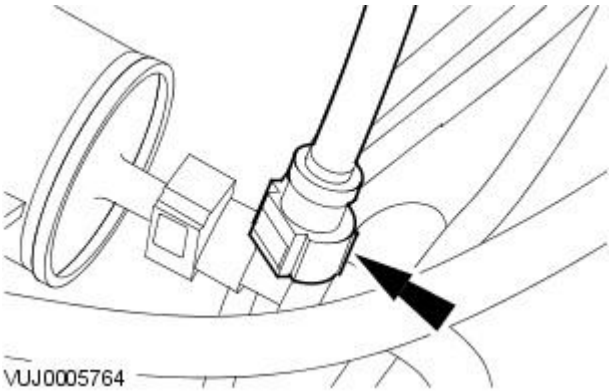

5. Connect the fuel filter line quick release coupling.
   For additional information, refer to: Quick Release Coupling - Push Connect (310-00 Fuel System - General Information, General Procedures).

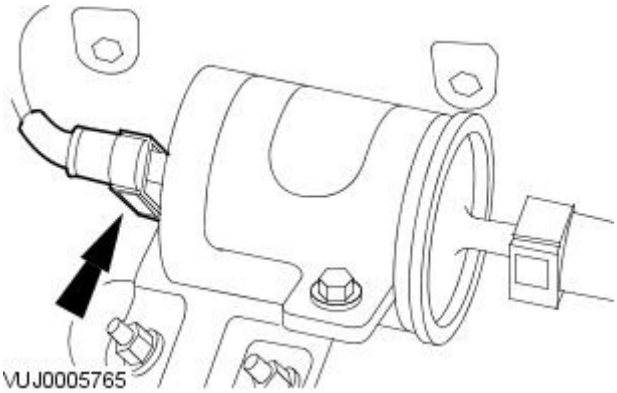

6. Connect the fuel filter line quick release coupling.
   For additional information, refer to: Quick Release Coupling - Push Connect (310-00 Fuel System - General Information, General Procedures).

7. Lower the vehicle.
8. Fill the fuel tank with fuel.
9. Connect the electrical connector.

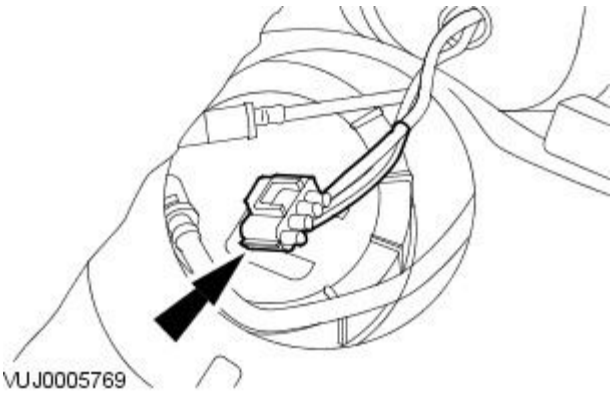

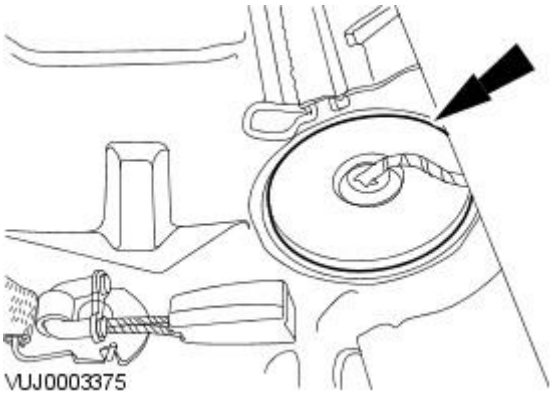

10. Attach the wiring harness grommet.

11. Install the rear seat cushion.
For additional information, refer to: Rear Seat Cushion (501-10 Seating, Removal and Installation).

12. Connect the battery ground cable.
For additional information, refer to: Battery Connect (414-01 Battery, Mounting and Cables, General Procedures).

Fuel Tank and Lines - Fuel Tank2.0L Duratorq-TDCi / 2.2L Duratorq-TDCi (110kW / 150PS) - Puma

Removal and Installation

Removal

• WARNINGS:

Place the vehicle in a well ventilated, quarantined area and arrange **No Smoking** signs about the vehicle.

Do not smoke or carry lighted tobacco or an open flame of any type when working on or near any fuel related components. Failure to follow these instructions may result in personal injury.

Before any work is carried out on the fuel system, ground the vehicle to earth and maintain the ground connection until the work is complete. Failure to follow this instruction may result in personal injury.

This procedure involves fuel handling. Be prepared for fuel spillage at all times and always observe fuel handling precautions. Failure to follow these instructions may result in personal injury.

After carrying out repairs, the fuel system must be checked for leaks. Failure to follow this instruction may result in personal injury.

1. Remove the rear seat cushion.
   For additional information, refer to: Rear Seat Cushion (501-10 Seating, Disassembly and Assembly).
2. Detach the wiring harness grommet.

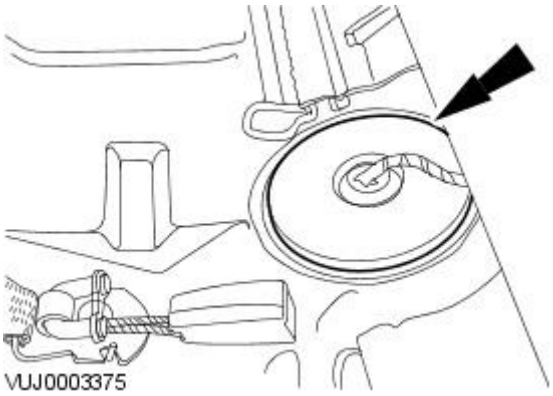

3. Disconnect the electrical connector.

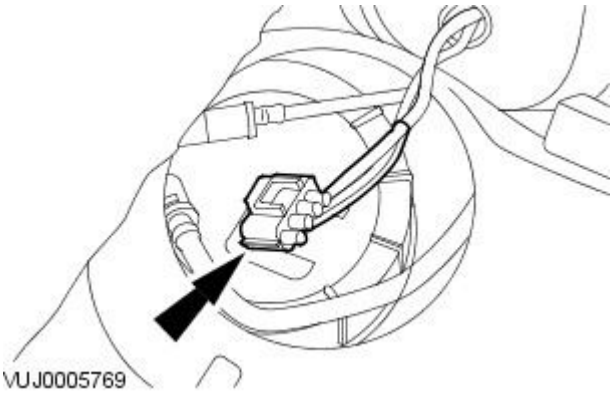

4. Drain the fuel tank.
   For additional information, refer to: Fuel Tank Draining - 2.0L Duratorq-TDCi/2.2L Duratorq-TDCi (110kW/150PS) - Puma (310-00 Fuel System - General Information, General Procedures).
5. Disconnect the fuel return line.

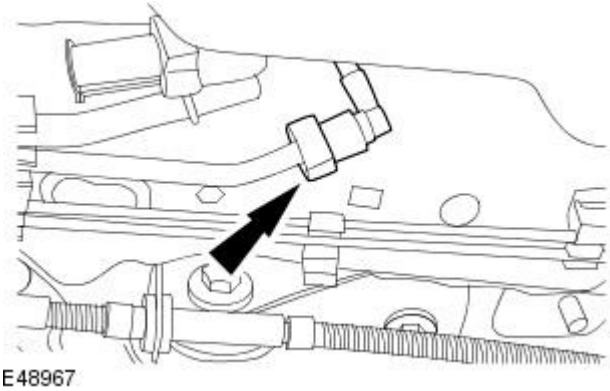

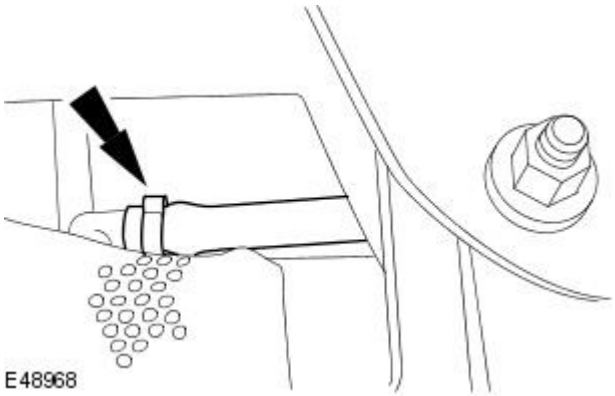

6. Detach the breather hose from the fuel tank.

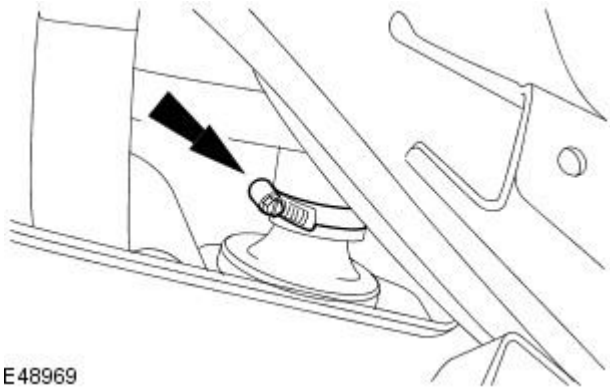

7. NOTE: Note the orientation of the fuel tank filler pipe to fuel tank hose retaining clip before loosening.

Loosen the fuel tank filler pipe to fuel tank hose retaining clip.

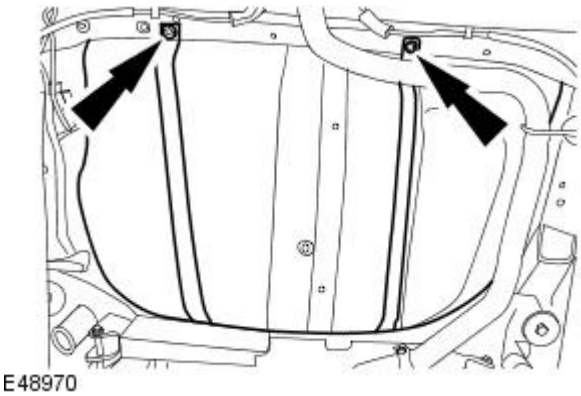

8. NOTE: An assistant will be required to remove the fuel tank.

Remove the fuel tank.

- Remove the fuel tank support straps.

Installation

• WARNINGS:

Place the vehicle in a well ventilated, quarantined area and arrange **No Smoking** signs about the vehicle.

Do not smoke or carry lighted tobacco or an open flame of any type when working on or near any fuel related components. Failure to follow these instructions may result in personal injury.

Before any work is carried out on the fuel system, ground the vehicle to earth and maintain the ground connection until the work is complete.

This procedure involves fuel handling. Be prepared for fuel spillage at all times and always observe fuel handling precautions. Failure to follow these instructions may result in personal injury.

After carrying out repairs, the fuel system must be checked for leaks. Failure to follow this instruction may result in personal injury.

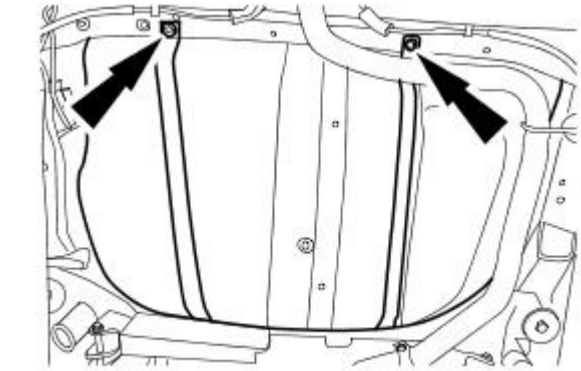

E48970

1. NOTE: An assistant will be required to install the fuel tank.

• NOTE: Make sure the fuel filler pipe hose is connected to the fuel tank as it is installed.

Install the fuel tank.

- Install the fuel tank support straps.
- Tighten to 25 Nm.

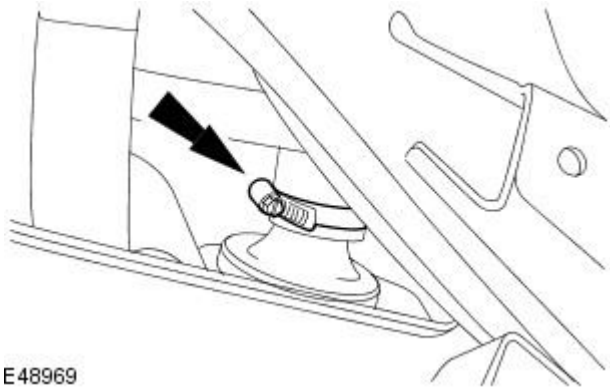

E48969

2. NOTE: Make sure the fuel tank filler pipe to fuel tank hose retaining clip is correctly orientated.

Tighten the fuel tank filler pipe to fuel tank hose retaining clip.

- Tightyen to 3 Nm.

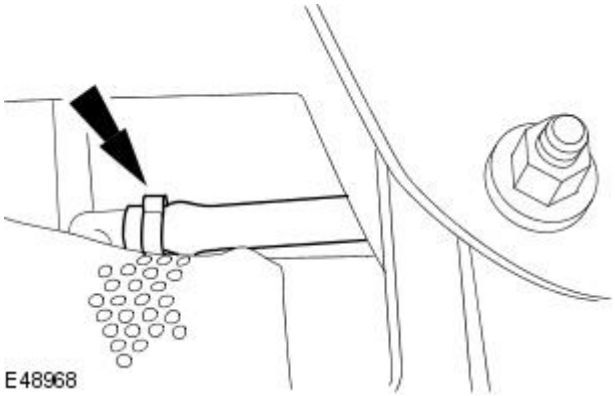

E48968

3. Attach the breather hose to the fuel tank.

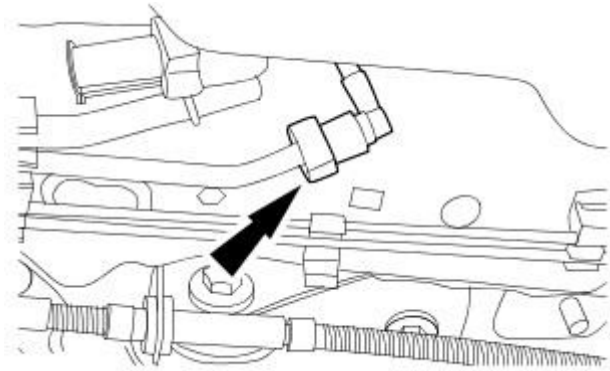

E48967

4. Connect the fuel return line.

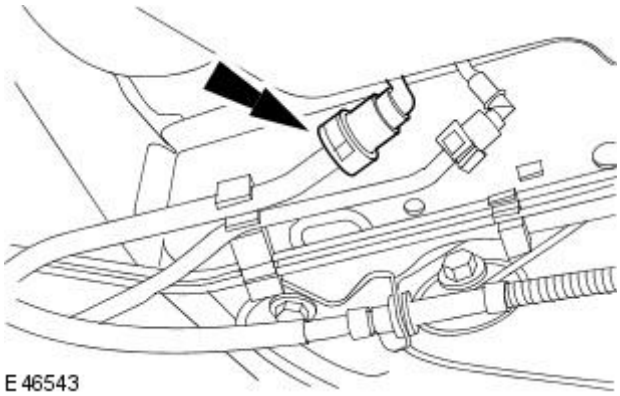

E46543

5. Connect the fuel supply line.

6. Lower the vehicle.
7. Fill the fuel tank with fuel.
8. Connect the electrical connector.

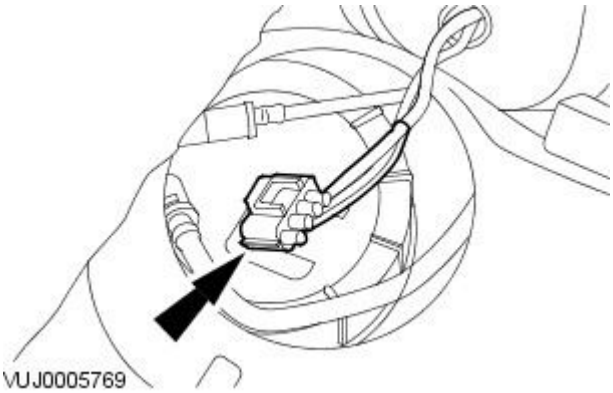

9. Attach the wiring harness grommet.

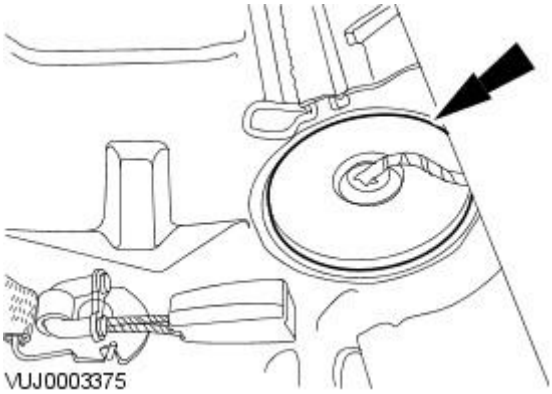

10. Install the rear seat cushion.
For additional information, refer to: Rear Seat Cushion (501-10 Seating, Disassembly and Assembly).
11. Connect the battery ground cable.
For additional information, refer to: Battery Connect (414-01 Battery, Mounting and Cables, General Procedures).

Fuel Tank and Lines - Fuel Tank2.5L NA V6 - AJV6 / 3.0L NA V6 - AJ27

Removal and Installation

Special Tool(s)	
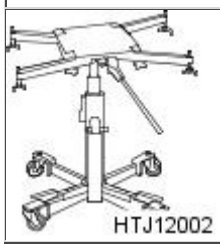 HTJ12002	Powertrain Assembly Jack HTJ1200-2

Removal

• WARNINGS:

Place the vehicle in a well ventilated, quarantined area and arrange **No Smoking / Petrol Fumes** signs about the vehicle.

Before any work is carried out on the fuel system, ground the vehicle to earth and maintain the ground connection until the work is complete.

Do not smoke or carry lighted tobacco or an open flame of any type when working on or near any fuel related components. Highly flammable vapors are always present and may ignite. Failure to follow these instructions may result in personal injury.

Do not carry or operate cellular phones when working on or near any fuel related components. Highly flammable vapors are always present and may ignite. Failure to follow these instructions may result in personal injury.

This procedure involves fuel handling. Be prepared for fuel spillage at all times and always observe fuel handling precautions. Failure to follow these instructions may result in personal injury.

• NOTE: Non federal market vehicles, refer to steps 29 and 32.

• NOTE: Federal market vehicles, refer to steps 23, 24, 28 and 31.

1. NOTE: All vehicles

Disconnect the battery ground cable.
For additional information, refer to: Battery Disconnect and Connect (414-01 Battery, Mounting and Cables, General Procedures).

2. Remove the fuel filler cap.

3. De-pressurize the fuel system.
For additional information, refer to: Fuel System Pressure Release (310-00 Fuel System - General Information, General Procedures).

4. Remove the rear seat cushion.
For additional information, refer to: Rear Seat Cushion (501-10 Seating, Removal and Installation).

5. Detach the wiring harness grommet.

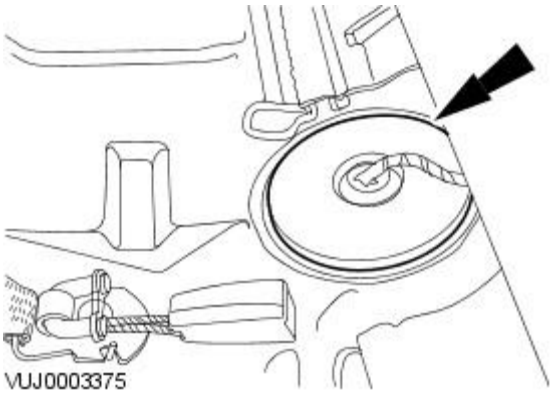

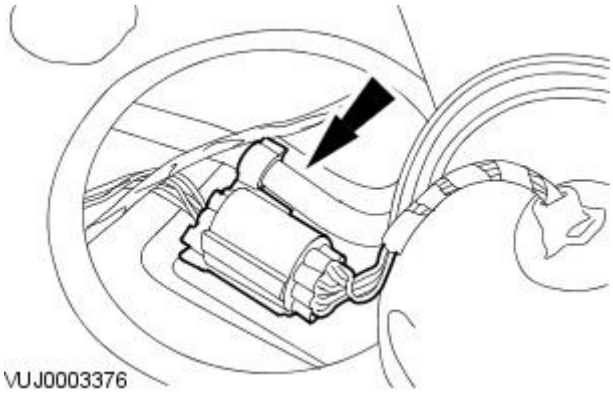

6. Detach the electrical connector.

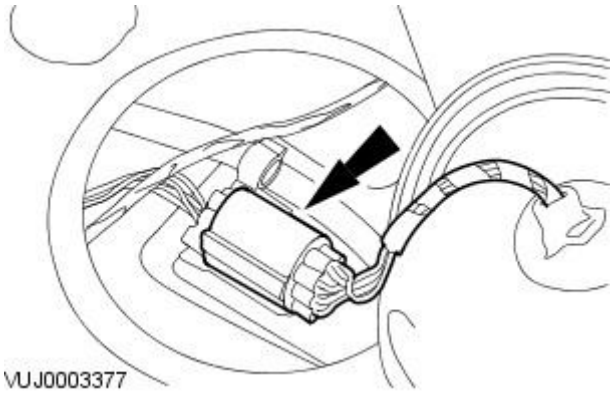

7. Disconnect the electrical connector.

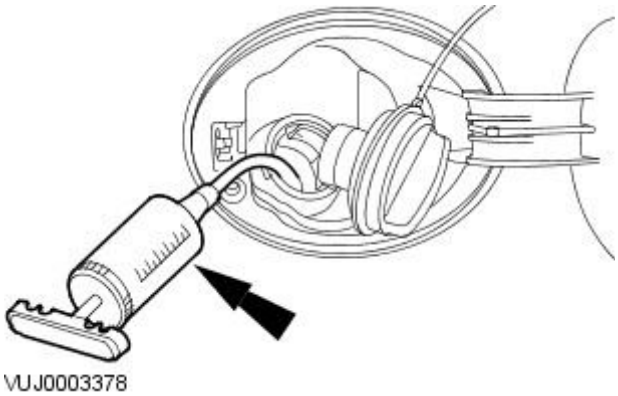

8. Using a suitable suction device drain the fuel tank filler pipe.

9. NOTE: To prevent the vehicle becoming unstable when the fuel tank has been removed, install the vehicle tie down straps.

Raise and support the vehicle.
For additional information, refer to: Lifting (100-02 Jacking and Lifting, Description and Operation).

10. Remove the driveshaft.
For additional information, refer to: Driveshaft (205-01 Driveshaft, Removal and Installation).

11. Remove the front muffler.
For additional information, refer to: Front Muffler - 2.0L NA V6 - AJV6/2.5L NA V6 - AJV6/3.0L NA V6 - AJ27 (309-00 Exhaust System, Removal and Installation).

12. Using the special tool, support the axle assembly.

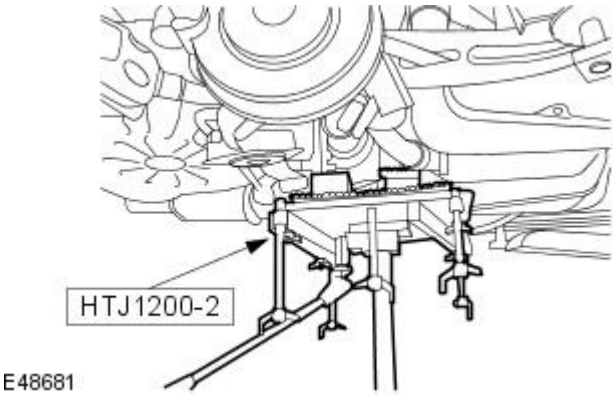

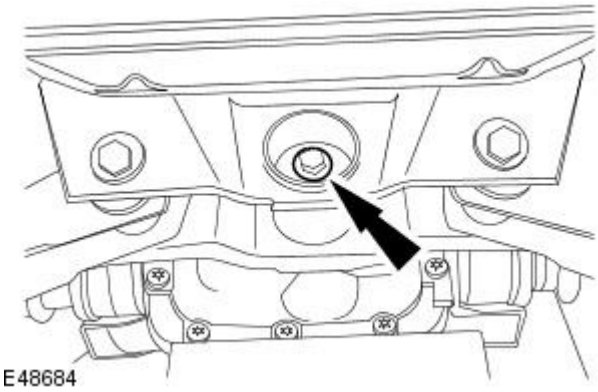

13. Remove the axle assembly rear retaining bolt.

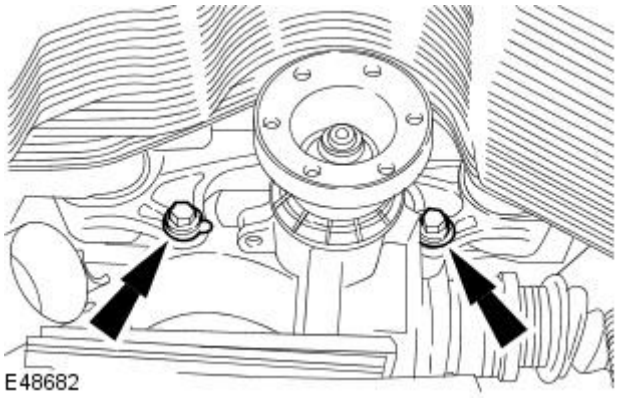

14. Remove the axle assembly front retaining bolts.

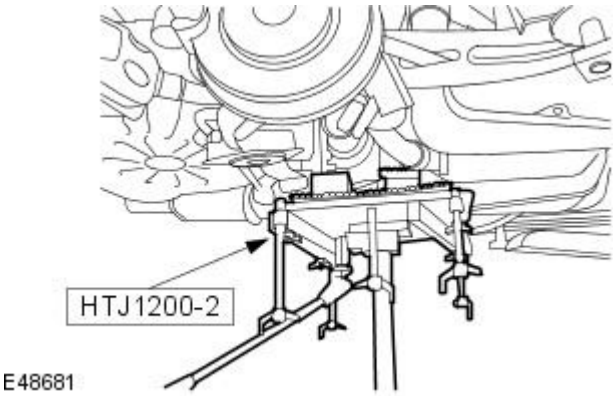

15. Using the special tool, lower the axle assembly approximately 75 mm (2.95 inches).

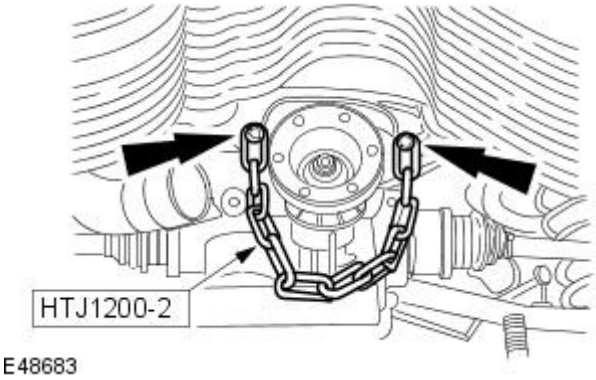

16. Install the chain supplied with the special tool HTJ1200-2 to the axle assembly front support bracket.

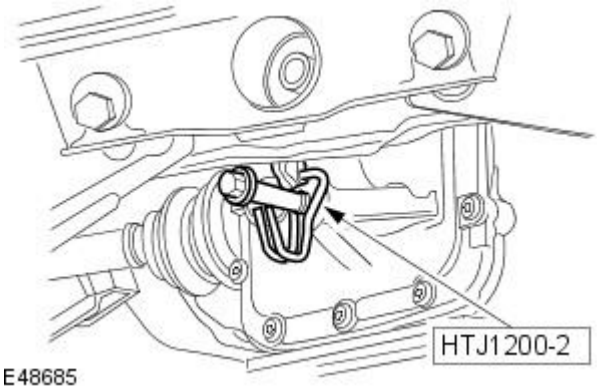

17. Install the securing strap supplied with the special tool HTJ1200-2 to the axle assembly.

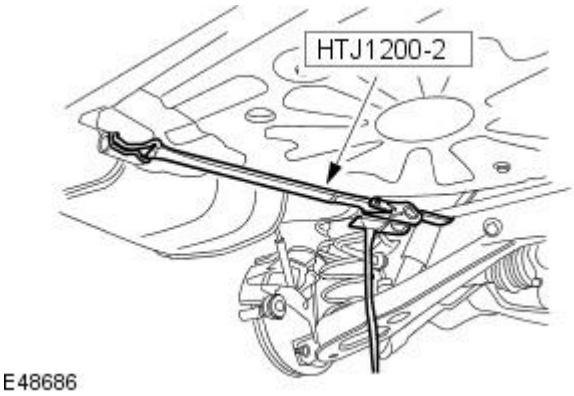

18. Attach the securing strap supplied with the special tool HTJ1200-2 to the rear towing eye thread and support the rear of the axle assembly.

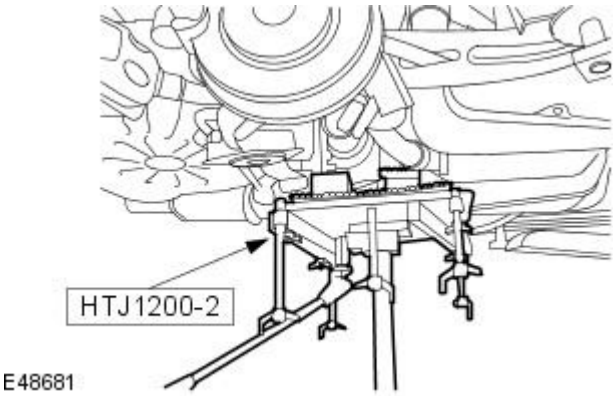

19. Remove the special tool.

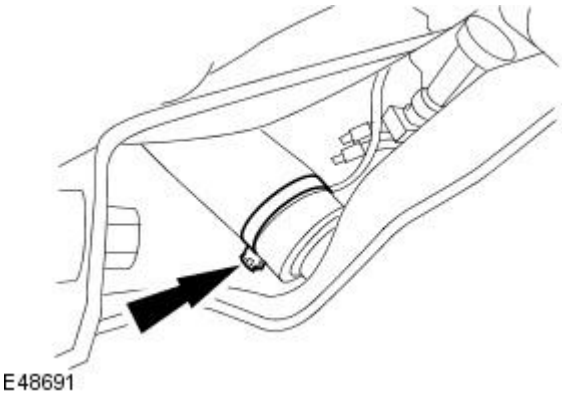

20. NOTE: Note the orientation of the fuel tank filler pipe to fuel tank hose retaining clip before loosening.

Loosen the fuel tank filler pipe to fuel tank hose retaining clip.

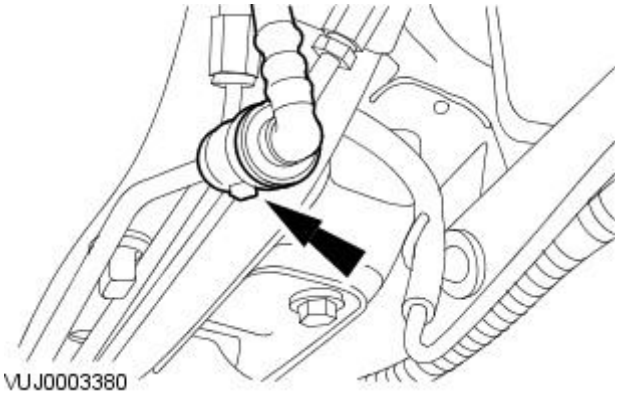

21. Disconnect the evaporative emission canister purge hose quick release coupling.
For additional information, refer to: Quick Release Coupling - Push Connect (310-00 Fuel System - General Information, General Procedures).

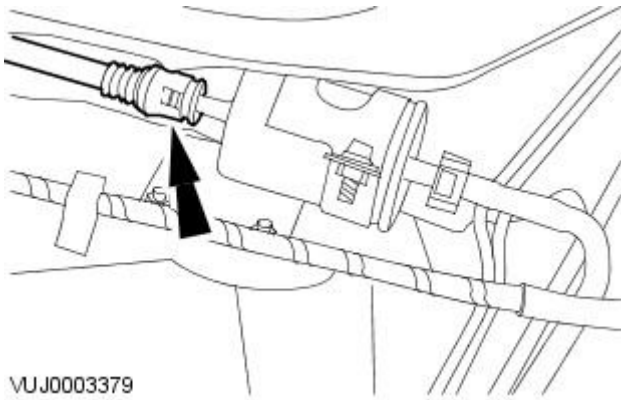

22. Disconnect the fuel filter line quick release coupling.
For additional information, refer to: Quick Release Coupling - Push Connect (310-00 Fuel System - General Information, General Procedures).

- Install blanking plugs to the male and female connectors.

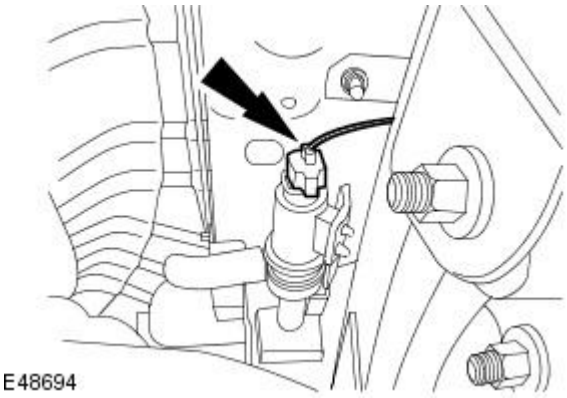

23. NOTE: Federal market vehicles only.

Disconnect the evaporative emission canister close valve electrical connector.

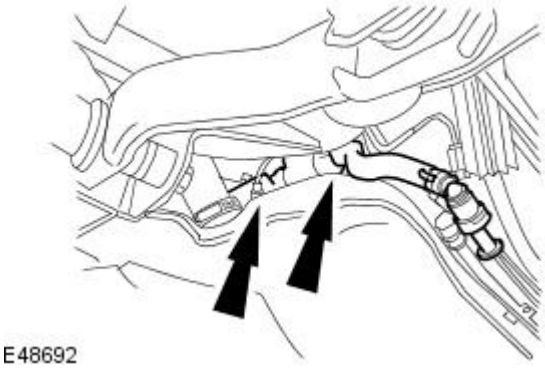

24. NOTE: Federal market vehicles only.

Detach the evaporative emission canister purge hose from the fuel tank retaining clips.

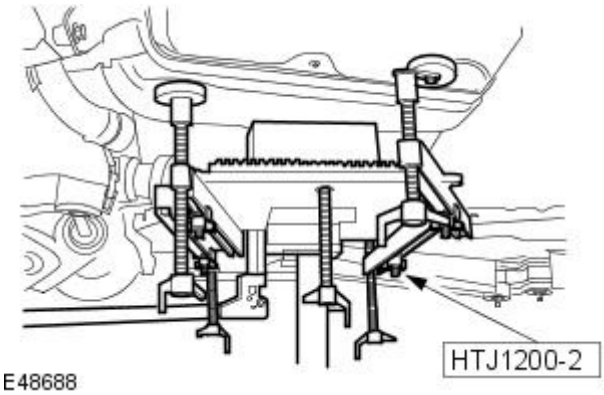

25. CAUTION: Use packing blocks supplied with the special tool HTJ1200-2 to prevent damage to the underside of the fuel tank. Failure to follow this instruction may result in damage to the fuel tank.

- NOTE: All vehicles

Using the special tool, support the fuel tank.

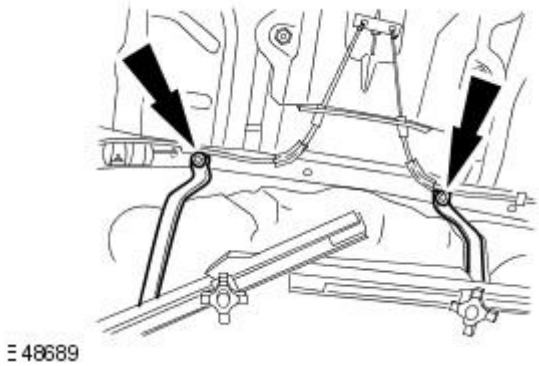

26. Remove the fuel tank support straps retaining bolts.

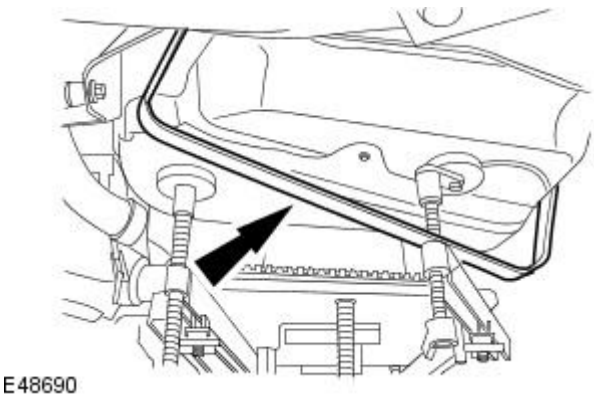

27. NOTE: Right-hand shown, left-hand similar.

Remove the fuel tank support straps.

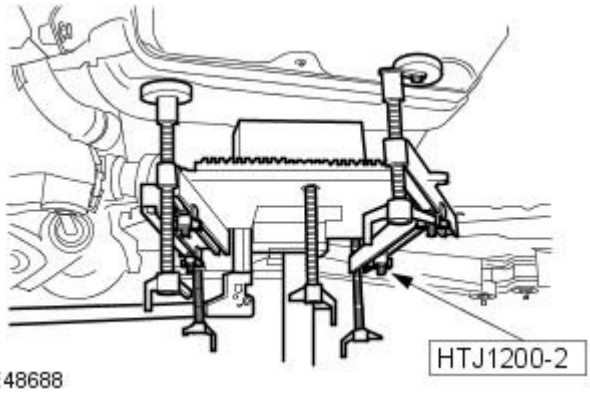

E48688

28. NOTE: Federal market vehicles only.

Using the special tool, lower the fuel tank approximately 100 mm (3.94 inches).

- Detach the fuel filler pipe hose from the fuel tank.
- Install blanking plugs to the fuel tank and fuel filler pipe hose.

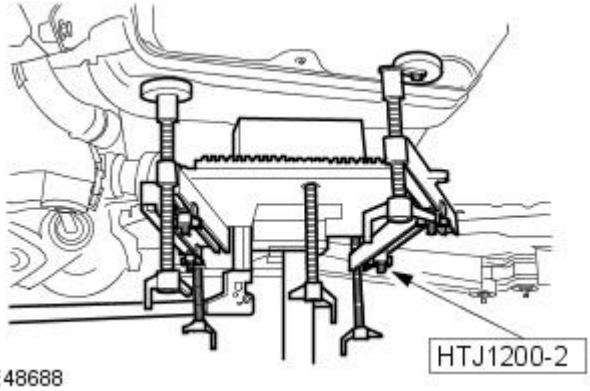

E48688

29. NOTE: Non federal market vehicles only.

Using the special tool, lower the fuel tank approximately 75 mm (2.95 inches).

- Detach the fuel filler pipe hose from the fuel tank.
- Install blanking plugs to the fuel tank and fuel filler pipe hose.

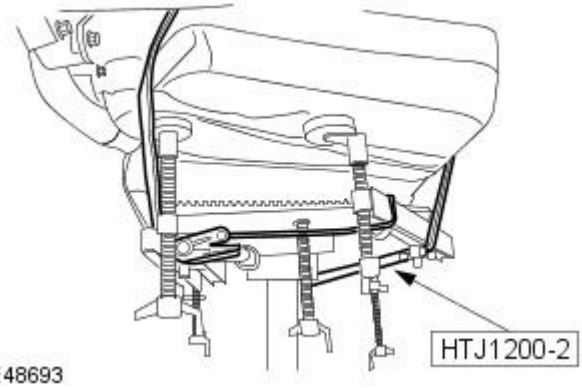

E48693

30. NOTE: All vehicles

Install the securing strap supplied with the special tool HTJ1200-2 to secure the fuel tank to the special tool.

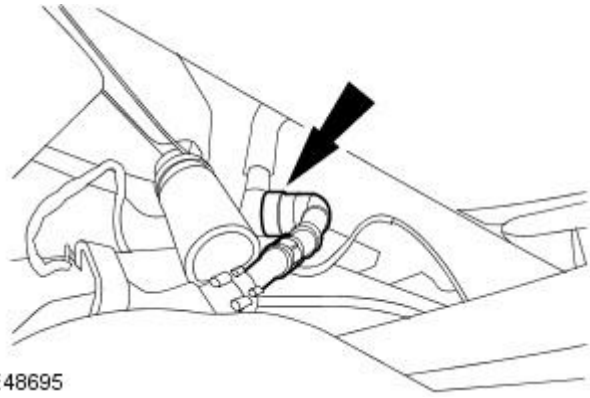
E48695

31. NOTE: Federal market vehicles only.

Disconnect the evaporative emission canister hose from the evaporative emission canister.

E49114

32. NOTE: Non federal market vehicles only.

Disconnect the evaporative emission canister hose from the evaporative emission canister.

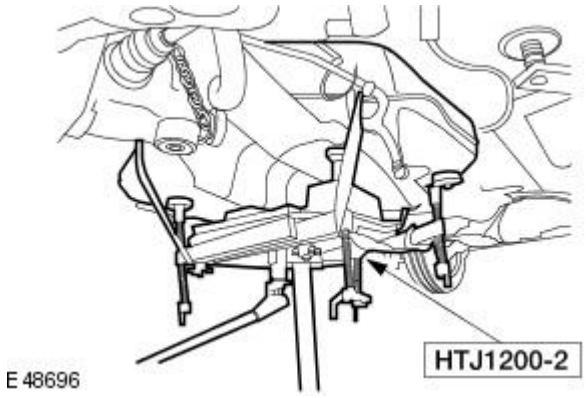

33. WARNING: The fuel tank cannot be drained in vehicle. Due to the heavy weight, make sure that the fuel tank is securely attached to the powertrain assembly jack when removing. Failure to follow this instruction may result in personal injury.

• NOTE: All vehicles

Using the special tool, remove the fuel tank.

Installation

• WARNINGS:

Do not smoke or carry lighted tobacco or an open flame of any type when working on or near any fuel related components. Highly flammable vapors are always present and may ignite. Failure to follow these instructions may result in personal injury.

Do not carry or operate cellular phones when working on or near any fuel related components. Highly flammable vapors are always present and may ignite. Failure to follow these instructions may result in personal injury.

Due to the heavy weight, make sure that the fuel tank is securely attached to the powertrain assembly jack when installing.

This procedure involves fuel handling. Be prepared for fuel spillage at all times and always observe fuel handling precautions. Failure to follow these instructions may result in personal injury.

• NOTE: Non federal vehicles, refer to steps 2 and 3.

• NOTE: Federal vehicles, refer to steps 1, 4, 10 and 11.

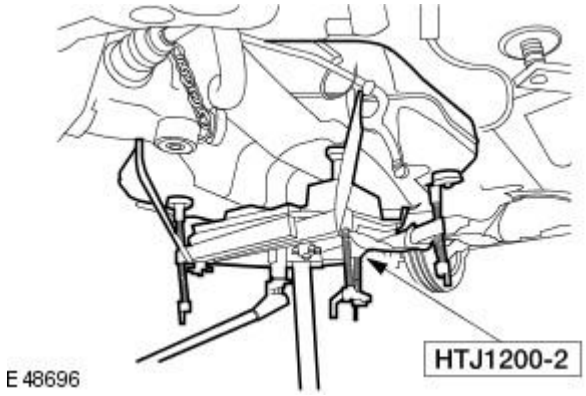

1. NOTE: Federal market vehicles only.

Using the special tool, position the fuel tank approximately 100 mm (3.94 inches) lower than the fully installed position.

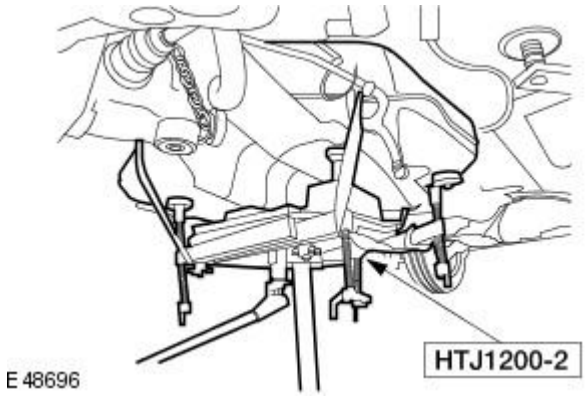

2. NOTE: Non federal market vehicles only.

Using the special tool, position the fuel tank approximately 75 mm (2.95 inches) lower than the fully installed position.

3. NOTE: Non federal market vehicles only.

Connect the evaporative emission canister hose to the evaporative emission canister.

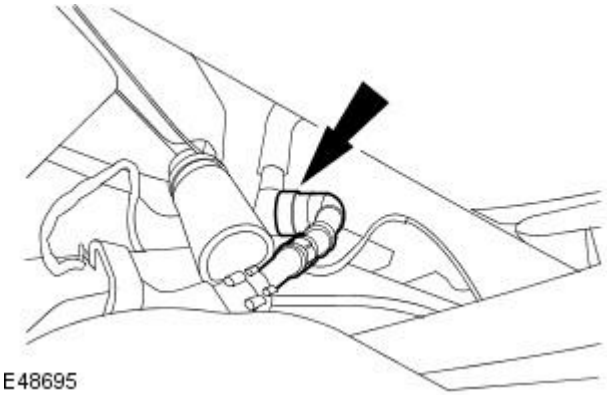

4. NOTE: Federal market vehicles only.

Connect the evaporative emission canister hose to the evaporative emission canister.

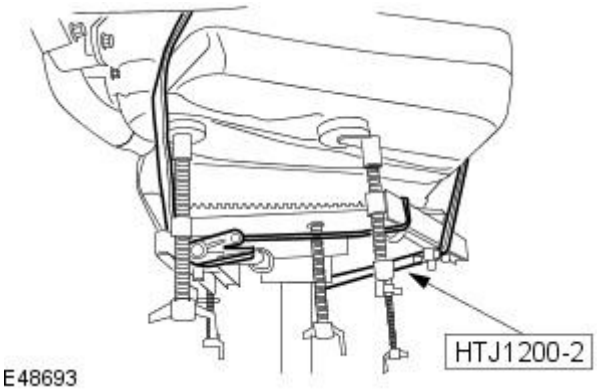

5. NOTE: All vehicles

Remove the securing strap from the fuel tank and the special tool.

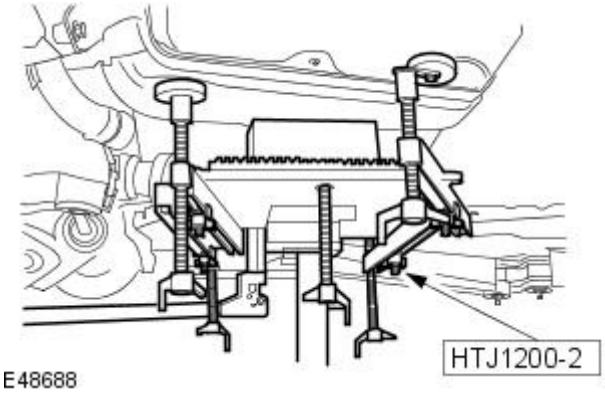

6. NOTE: Remove the blanking plugs from the fuel tank and fuel filler pipe hose.

• NOTE: Make sure the fuel filler pipe hose is connected to the fuel tank as it is installed.

Using the special tool, install the fuel tank.

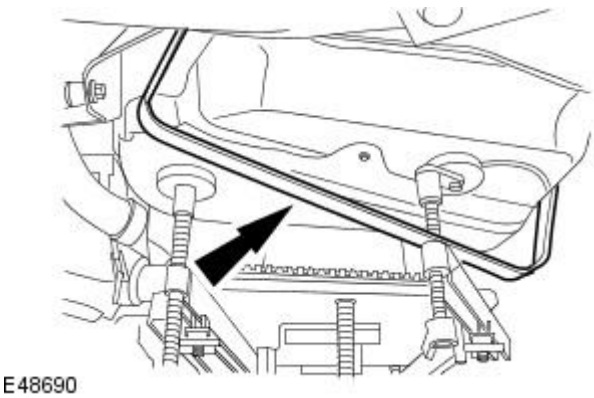

7. NOTE: Right-hand shown, left-hand similar.

Install the fuel tank support straps.

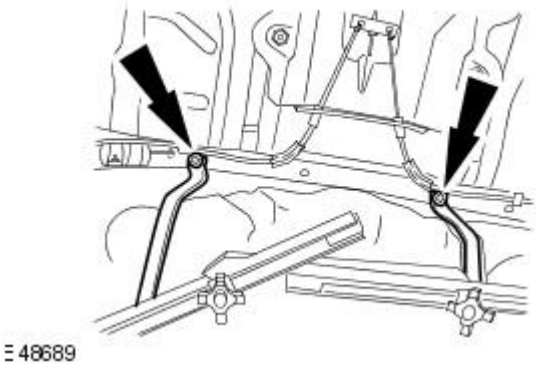

8. Install the fuel tank support straps retaining bolts.

- Tighten to 25 Nm.

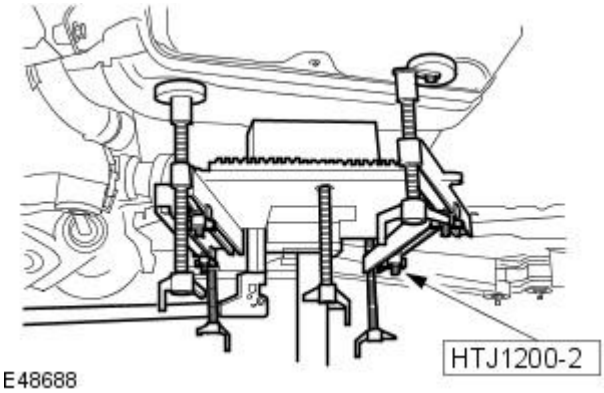

9. Remove the special tool.

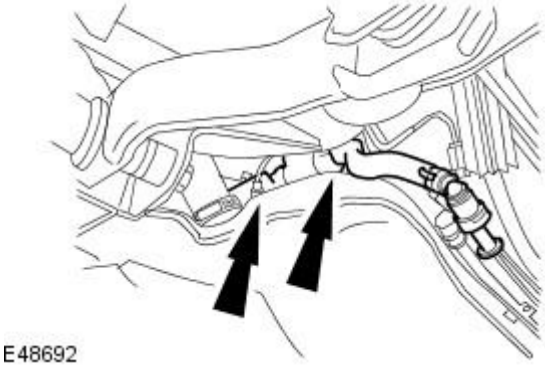

10. NOTE: Federal market vehicles only.

Attach the evaporative emission canister purge hose to the fuel tank retaining clips.

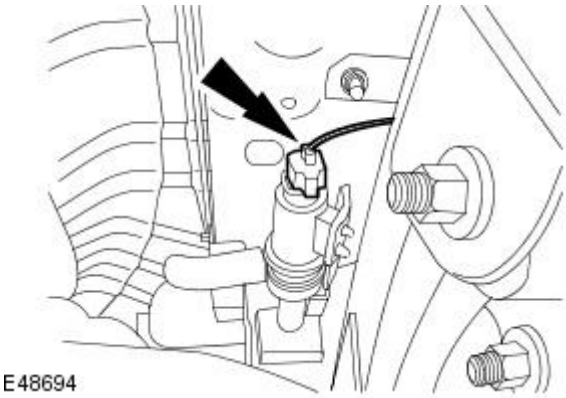

11. NOTE: Federal market vehicles only.

Connect the evaporative emission canister close valve electrical connector.

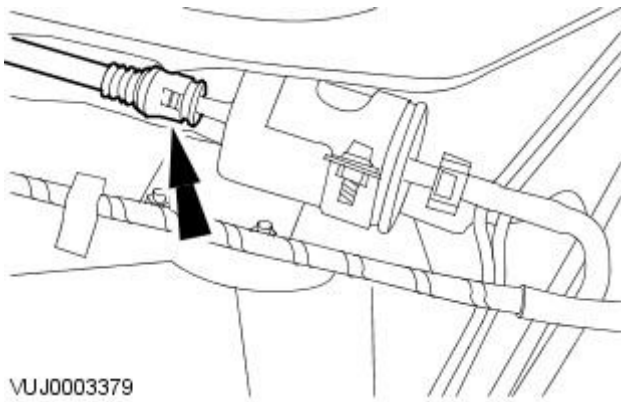

12. NOTE: All vehicles

- NOTE: Remove the blanking plugs.

Connect the fuel filter line quick release coupling.
For additional information, refer to: Quick Release Coupling - Push Connect (310-00 Fuel System - General Information, General Procedures).

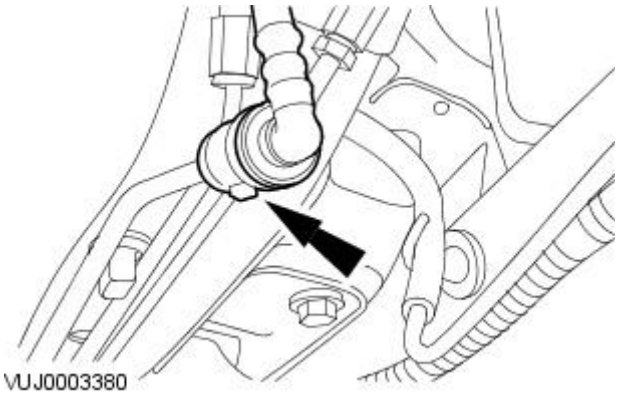

13. Connect the evaporative emission canister purge hose quick release coupling.
For additional information, refer to: Quick Release Coupling - Push Connect (310-00 Fuel System - General Information, General Procedures).

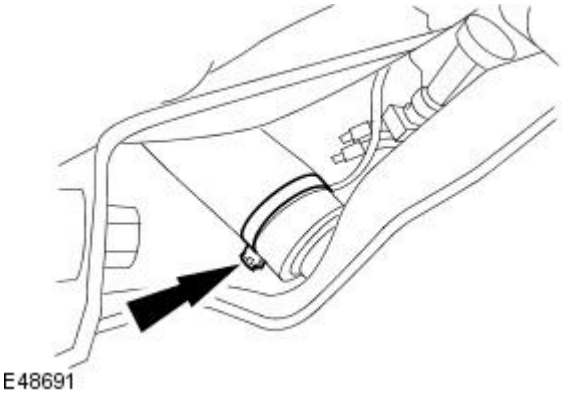

14. NOTE: Make sure the fuel tank filler pipe to fuel tank hose retaining clip is correctly orientated.

Tighten the fuel tank filler pipe to fuel tank hose retaining clip.

- Tighten to 3 Nm.

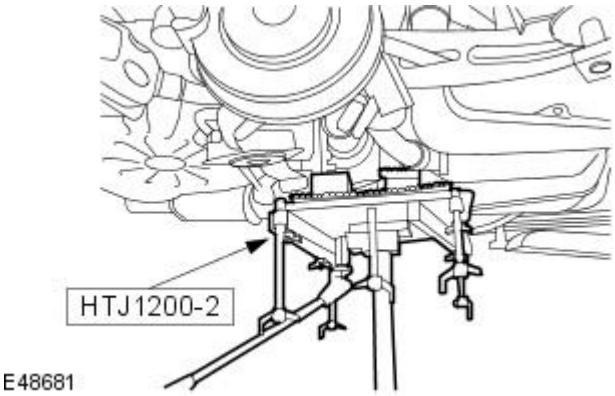

15. Using the special tool, support the axle assembly.

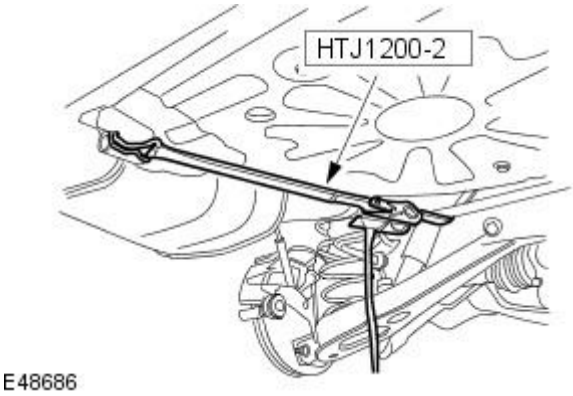

16. Detach the securing strap from the rear towing eye thread.

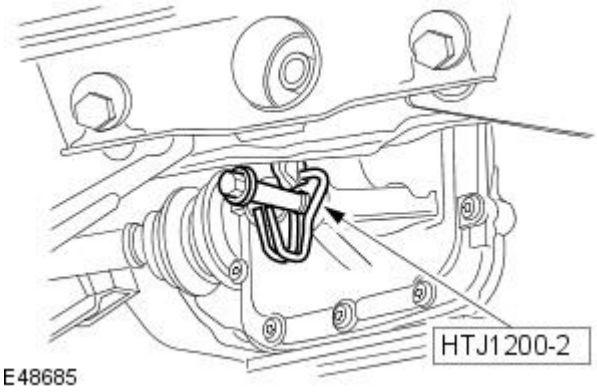

17. Remove the securing strap from the axle assembly.

- Discard the axle assembly rear retaining bolt.

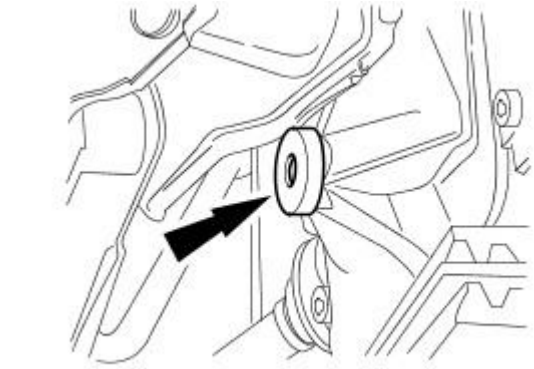
E48687

18. Remove and discard the axle assembly washer.

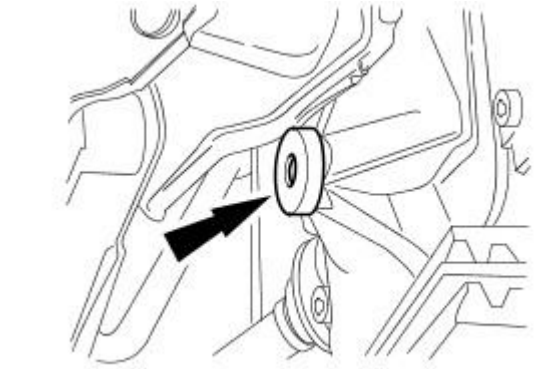
E48687

19. Install a new axle assembly washer.

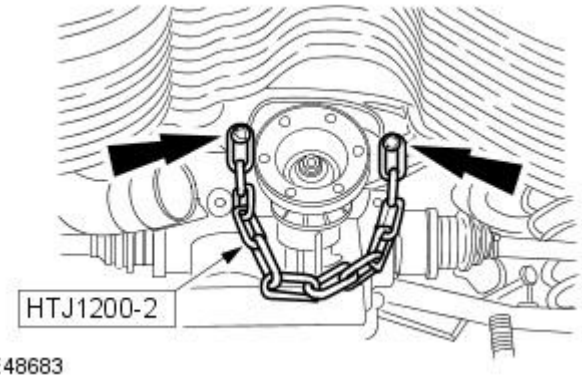

E48683

20. Remove the chain from the axle assembly front support bracket.

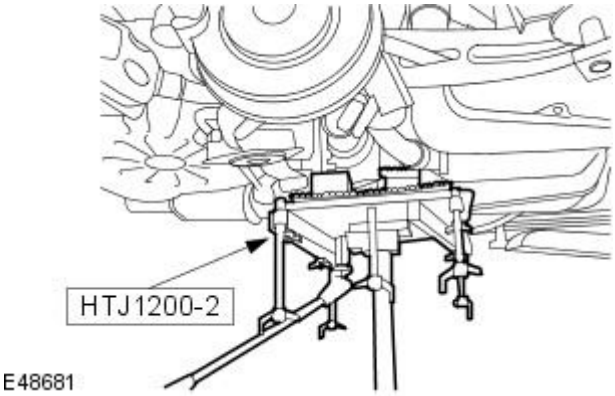

E48681

21. Using the special tool, install the axle assembly.

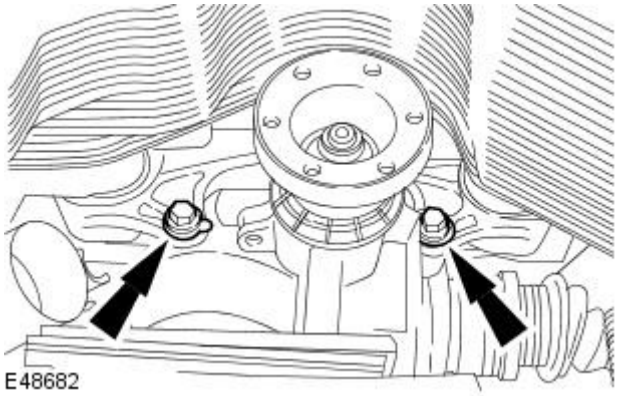
E48682

22. Loosely install the axle assembly front retaining bolts.

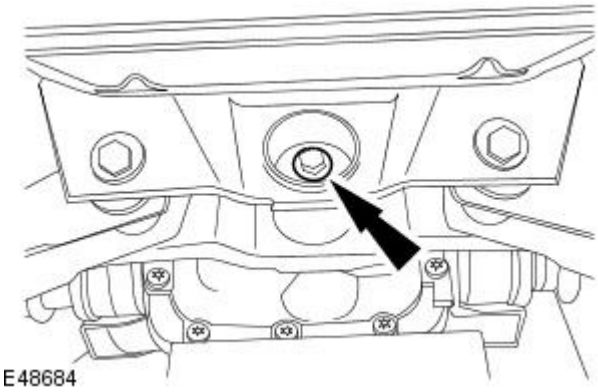

23. Loosely install a new axle assembly rear retaining bolt.

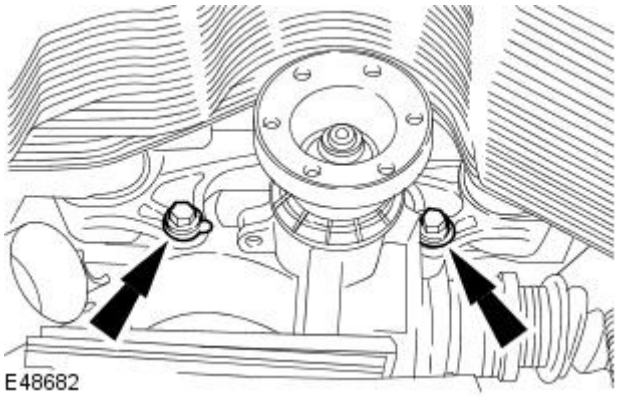

24. Tighten to 90 Nm.

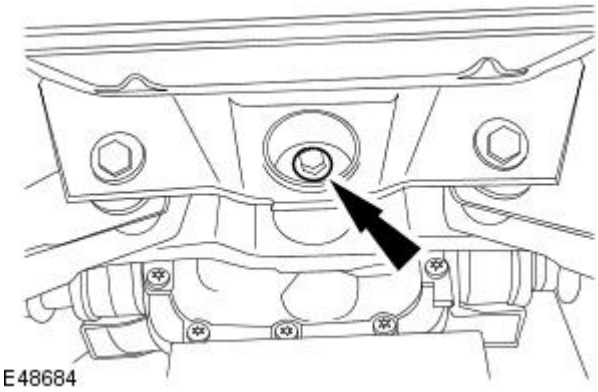

25. Tighten to 110 Nm.

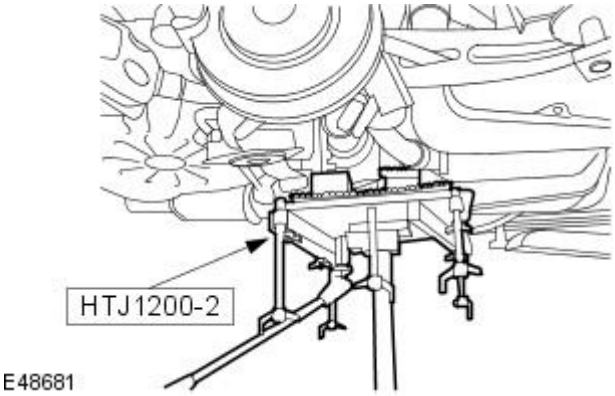

26. Remove the special tool.

27. Install the front muffler.
For additional information, refer to: Front Muffler - 2.0L NA V6 - AJV6/2.5L NA V6 - AJV6/3.0L NA V6 - AJ27 (309-00 Exhaust System, Removal and Installation).

28. Install the driveshaft.
For additional information, refer to: Driveshaft (205-01 Driveshaft, Removal and Installation).

29. NOTE: Remove the the vehicle tie down straps.

Lower the vehicle.

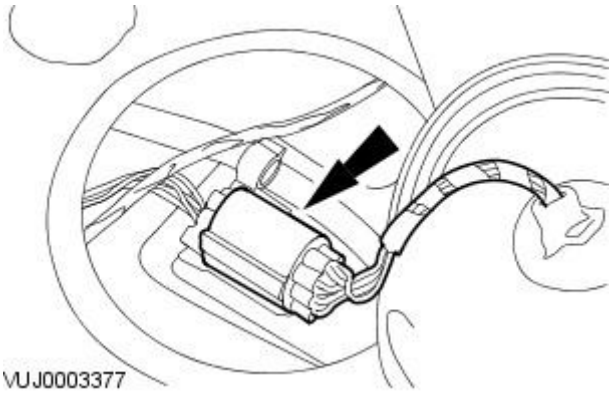

30. Connect the electrical connector.

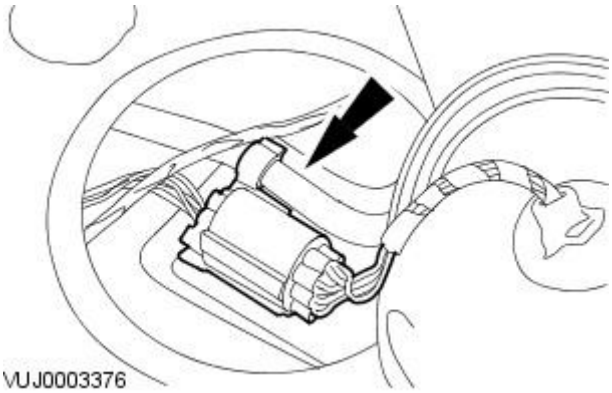

31. Attach the electrical connector.

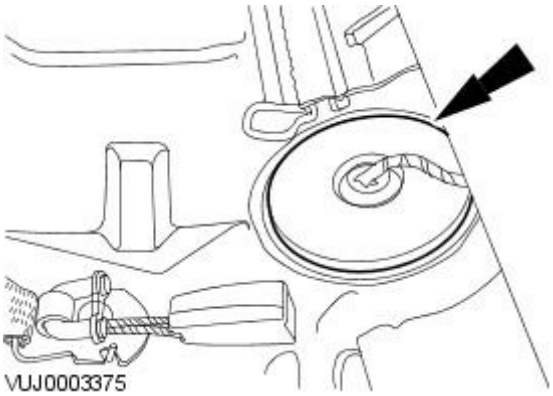

32. Attach the wiring harness grommet.

33. Install the rear seat cushion.
For additional information, refer to: Rear Seat Cushion (501-10 Seating, Removal and Installation).

34. Fill the fuel tank with the fuel drained from the fuel filler pipe.

35. Install the fuel filler cap.

36. Connect the battery ground cable.
For additional information, refer to: Battery Connect (414-01 Battery, Mounting and Cables, General Procedures).

Fuel Tank and Lines - Fuel Tank Filler Pipe

Removal and Installation

Removal

1. WARNINGS:

Place the vehicle in a quarantined area and arrange "No Smoking/Petrol Fumes" signs about the vehicle.

Do not smoke or carry lighted tobacco or open flame of any type when working on or near any fuel related components. Highly flammable vapors are always present and may ignite. Failure to follow these instructions may result in personal injury.

Do not carry or operate cellular phones when working on or near any fuel related components. Highly flammable vapours are always present and may ignite. Failure to follow these instructions may result in personal injury.

This procedure involves fuel handling. Be prepared for fuel spillage at all times and always observe fuel handling precautions. Failure to follow these instructions may result in personal injury.

Disconnect the battery ground cable. For additional information, refer to Section 414-01 Battery, Mounting and Cables.

2. Remove the fuel filler cap.

3. Using a suitable suction device drain the fuel tank filler pipe.

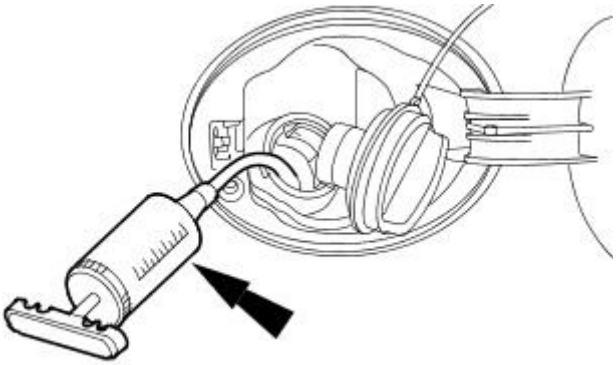

VUJ0003378

4. Remove the rear subframe. For additional information, refer to Section 502-00 Uni-Body, Subframe and Mounting System.

5. Detach the fuel tank filler pipe.

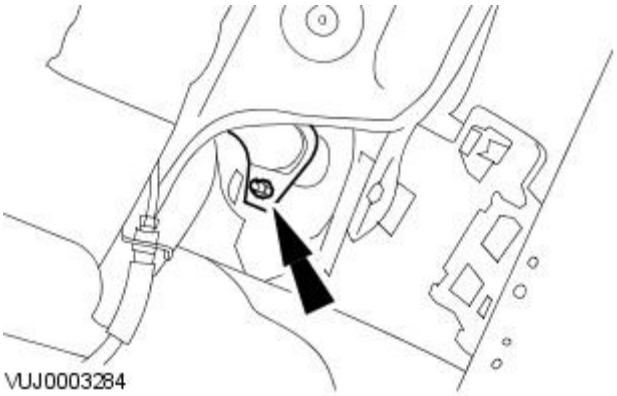

VUJ0003284

6. Detach the fuel tank filler pipe hose from the fuel tank.

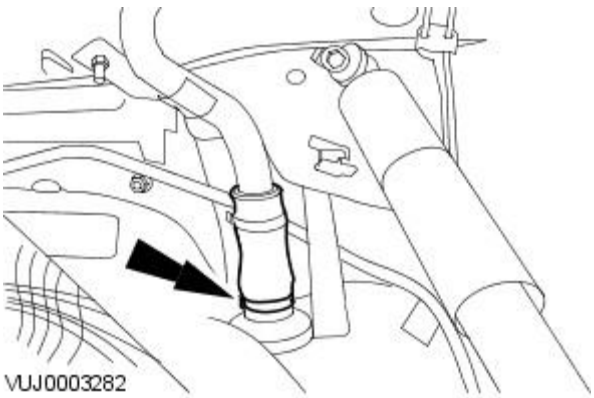

VUJ0003282

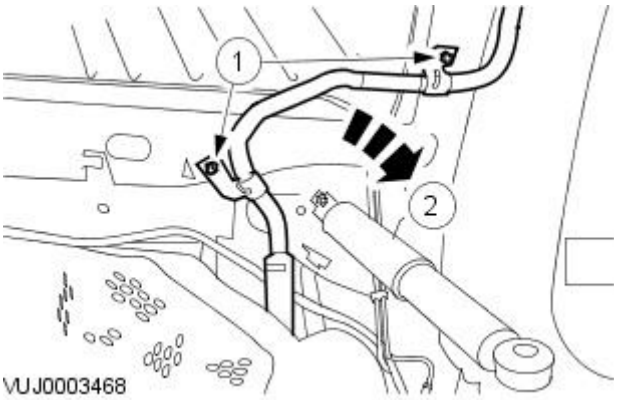

7. Remove the fuel tank filler pipe and hose.

1. Remove the retaining nuts.
2. Remove the fuel tank filler pipe and hose.

Installation

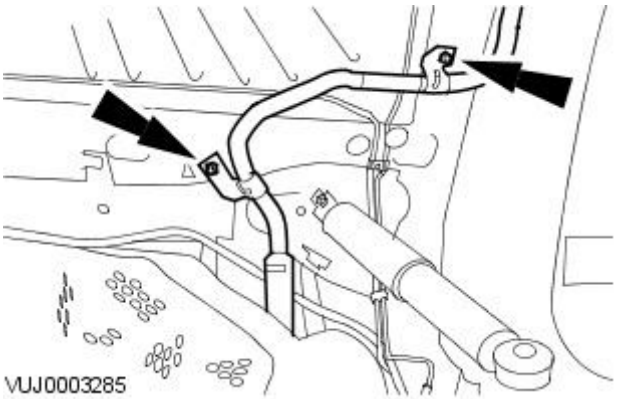

1. WARNINGS:

Do not smoke or carry lighted tobacco or open flame of any type when working on or near any fuel related components. Highly flammable vapors are always present and may ignite. Failure to follow these instructions may result in personal injury.

Do not carry or operate cellular phones when working on or near any fuel related components. Highly flammable vapours are always present and may ignite. Failure to follow these instructions may result in personal injury.

This procedure involves fuel handling. Be prepared for fuel spillage at all times and always observe fuel handling precautions. Failure to follow these instructions may result in personal injury.

To install, reverse the removal procedure.

- Tighten to 4 Nm.

2. Tighten to 4 Nm.

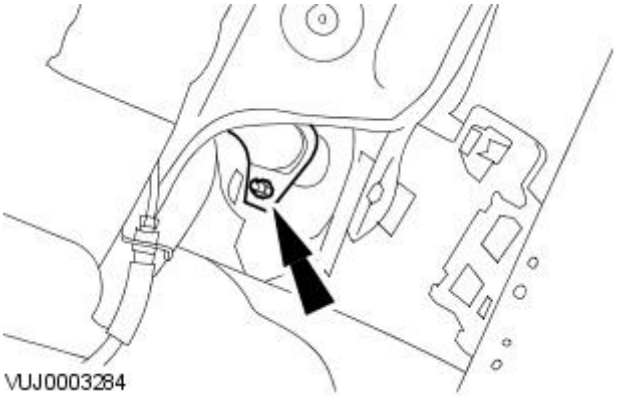

Fuel Tank and Lines - Gas Fuel Tank Pressure Sensor

Removal and Installation

Removal

• NOTE: The fuel tank pressure sensor is fitted to federal market vehicles only.

1. WARNINGS:

Do not smoke or carry lighted tobacco or an open flame of any type when working on or near any fuel related components. Highly flammable vapors are always present and may ignite. Failure to follow these instructions can result in personal injury.

Do not carry or operate cellular phones when working on or near any fuel related components. Highly flammable vapors are always present and may ignite. Failure to follow these instructions may result in personal injury.

This procedure involves fuel handling. Be prepared for fuel spillage at all times and always observe fuel handling precautions. Failure to follow these instructions may result in personal injury.

Remove the fuel tank.
For additional information, refer to: Fuel Tank - 2.5L NA V6 - AJV6/3.0L NA V6 - AJ27 (310-01 Fuel Tank and Lines, Removal and Installation).

2. NOTE: The fuel tank pressure sensor is supplied as an assembly with the evaporative emission hoses.

Remove the fuel tank pressure sensor assembly.

1. Disconnect the electrical connector.
2. Detach the wiring harness.
3. Remove the fuel tank pressure sensor assembly.

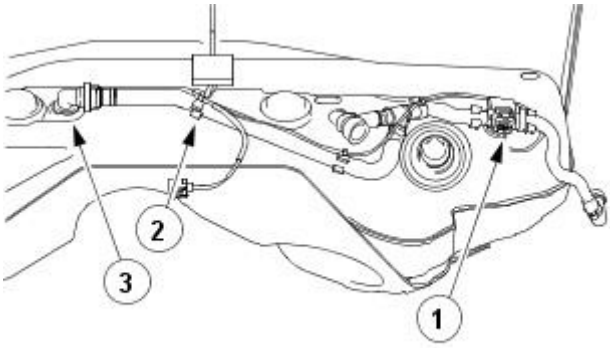

E49044

Installation

1. WARNINGS:

Do not smoke or carry lighted tobacco or open flame of any type when working on or near any fuel related components. Highly flammable vapors are always present and may ignite. Failure to follow these instructions can result in personal injury.

Do not carry or operate cellular phones when working on or near any fuel related components. Highly flammable vapors are always present and may ignite. Failure to follow these instructions may result in personal injury.

This procedure involves fuel handling. Be prepared for fuel spillage at all times and always observe fuel handling precautions. Failure to follow these instructions may result in personal injury.

To install, reverse the removal procedure.

Fuel Tank and Lines - Fuel Transfer Pump

Removal and Installation

Special Tool(s)	
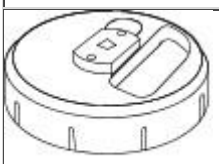	Remove/Install fuel pump/transfer pump locking ring (Non federal market vehicles only) 310-072A
	Remove/Install fuel pump/transfer pump locking ring (Federal market vehicles only) 310-147

Removal

• WARNINGS:

Place the vehicle in a quarantined area and arrange "No Smoking/Petrol Fumes" signs about the vehicle.

Before any work is carried out on the fuel system, ground the vehicle to earth and maintain the ground connection until the work is complete.

Do not smoke or carry lighted tobacco or open flame of any type when working on or near any fuel related components. Highly flammable vapors are always present and may ignite. Failure to follow these instructions may result in personal injury.

The fuel system remains pressurized for a long time after the ignition is switched off. The fuel pressure must be relieved before attempting any repairs. Failure to follow these instructions may result in personal injury.

After carrying out repairs, the fuel system must be checked visually for leaks. Failure to follow these instructions may result in personal injury.

This procedure involves fuel handling. Be prepared for fuel spillage at all times and always observe fuel handling precautions. Failure to follow these instructions may result in personal injury.

If taken internally do not induce vomiting, seek immediate medical attention. Failure to follow these instructions may result in personal injury.

If fuel contacts the eyes, flush the eyes with cold water or eyewash solution and seek medical attention.

Wash hands thoroughly after handling, as prolonged contact may cause irritation. Should irritation develop, seek medical attention.

• NOTE: Non federal market vehicles, refer to steps 1 to 6.

• NOTE: Federal market vehicles, refer to steps 7 to 10.

1. NOTE: Non federal market vehicles only.

Remove the fuel tank.
For additional information, refer to: Fuel Tank - 2.5L NA V6 - AJV6/3.0L NA V6 - AJ27 (310-01 Fuel Tank and Lines, Removal and Installation).

2. NOTE: Non federal market vehicles only.

Disconnect the electrical connector.

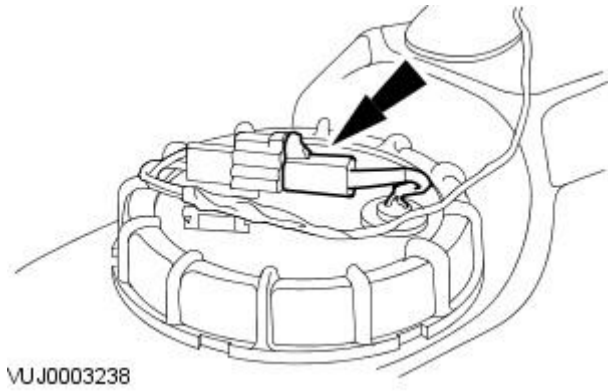

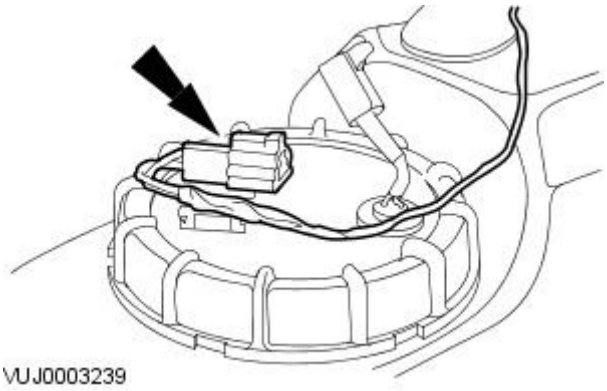

3. NOTE: Non federal market vehicles only.

Detach the electrical connector.

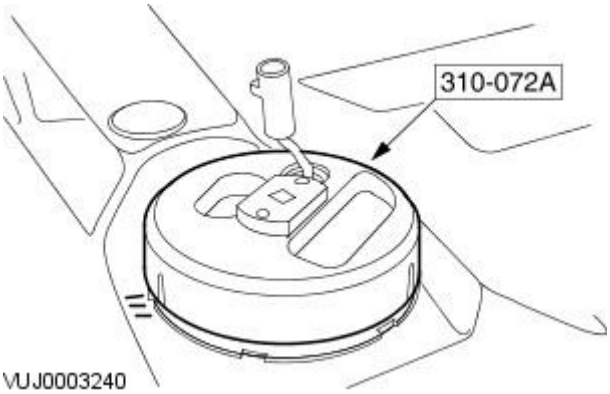

4. NOTE: Non federal market vehicles only.

• NOTE: Note the orientation of the fuel transfer pump before removal.

Using the special tool, remove the locking ring.

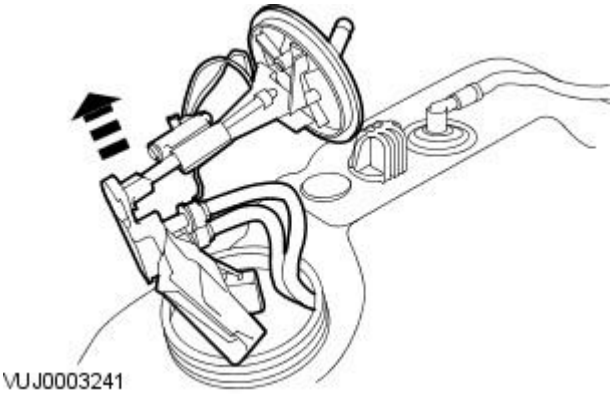

5. CAUTION: Make sure the float or arm are not damaged while removing the fuel transfer pump.

• NOTE: Non federal market vehicles only.

Detach the fuel transfer pump from the fuel tank.

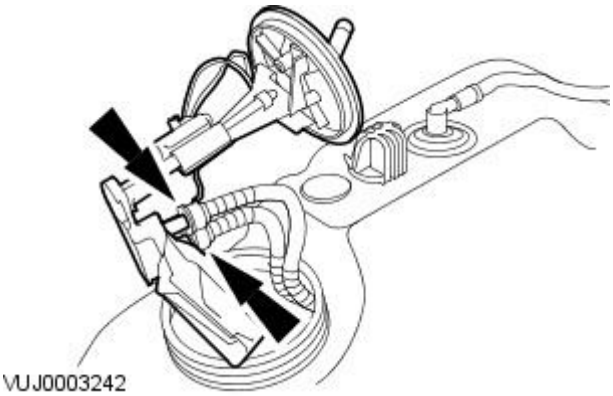

6. NOTE: Non federal market vehicles only.

Remove the fuel transfer pump.

- Disconnect the fuel crossover pipes.
- Remove and discard the O-ring seal.

7. NOTE: Federal market vehicles only.

Remove the fuel pump module.
For additional information, refer to: Fuel Pump Module - 2.5L NA V6 - AJV6/3.0L NA V6 - AJ27 (310-01 Fuel Tank and Lines, Removal and Installation).

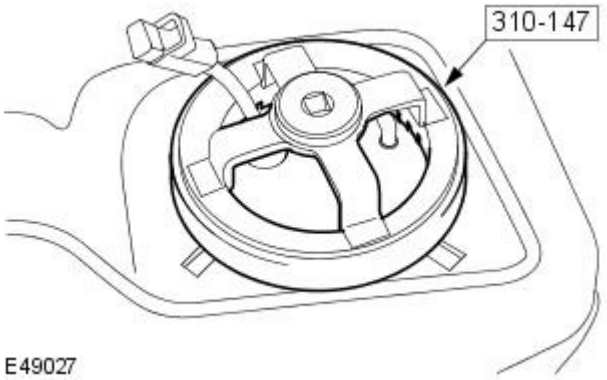

8. NOTE: Federal market vehicles only.

• NOTE: Note the orientation of the fuel transfer pump before removal.

Using the special tool, remove the locking ring.

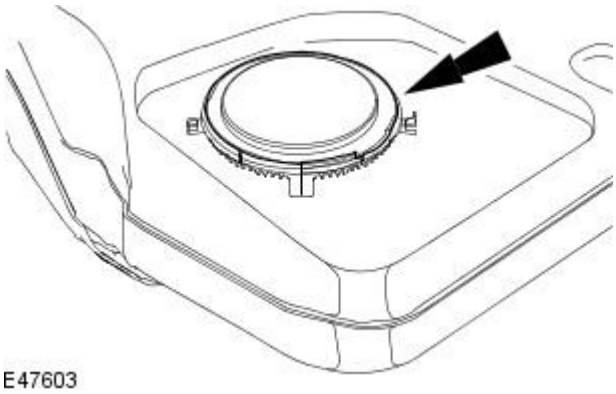

9. CAUTION: Make sure the float or arm are not damaged while removing the fuel transfer pump.

• NOTE: Federal market vehicles only.

Detach the fuel transfer pump from the fuel tank.

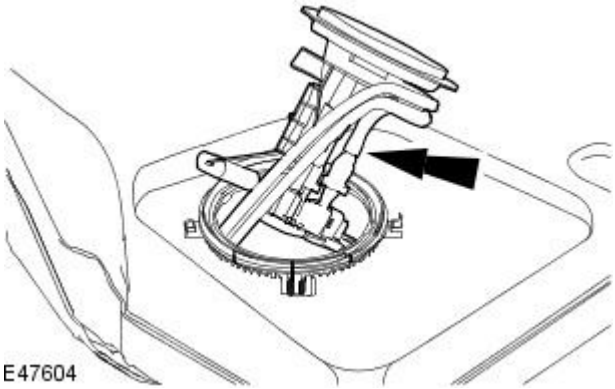

10. NOTE: Federal market vehicles only.

Remove the fuel transfer pump and fuel crossover pipes.

- Remove and discard the O-ring seal.

Installation

• WARNINGS:

Place the vehicle in a quarantined area and arrange "No Smoking/Petrol Fumes" signs about the vehicle.

Before any work is carried out on the fuel system, ground the vehicle to earth and maintain the ground connection until the work is complete.

Do not smoke or carry lighted tobacco or open flame of any type when working on or near any fuel related components. Highly flammable vapors are always present and may ignite. Failure to follow these instructions may result in personal injury.

The fuel system remains pressurized for a long time after the ignition is switched off. The fuel pressure must be relieved before attempting any repairs. Failure to follow these instructions may result in personal injury.

After carrying out repairs, the fuel system must be checked visually for leaks. Failure to follow these instructions may result in personal injury.

This procedure involves fuel handling. Be prepared for fuel spillage at all times and always observe fuel handling precautions. Failure to follow these instructions may result in personal injury.

If taken internally do not induce vomiting, seek immediate medical attention. Failure to follow these instructions may result in personal injury.

If fuel contacts the eyes, flush the eyes with cold water or eyewash solution and seek medical attention.

Wash hands thoroughly after handling, as prolonged contact may cause irritation. Should irritation develop, seek medical attention.

• NOTE: Federal market vehicles, refer to step 1.

• NOTE: Non federal market vehicles, refer to step 2.

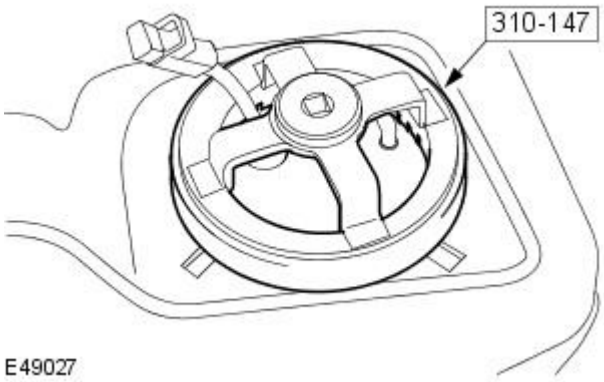

1. CAUTION: Make sure the float or arm are not damaged while installing the fuel pump module.

• NOTE: Federal market vehicles only.

• NOTE: Make sure the fuel transfer pump is correctly orientated.

To install, reverse the removal procedure.

- Install a new O-ring seal.
- Tighten to 120 Nm.

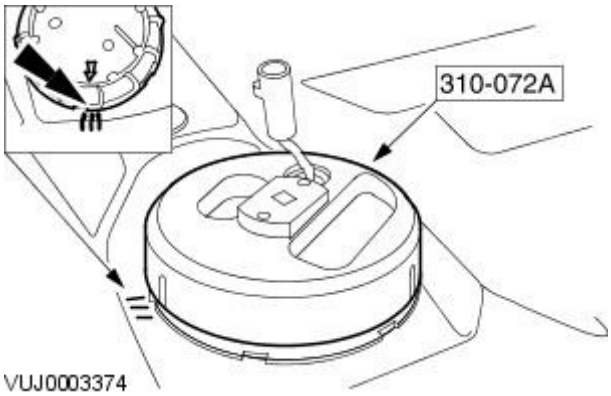

2. CAUTIONS:

Make sure the float or arm are not damaged while installing the fuel pump module.

Make sure the fuel crossover pipes are not damaged while installing the fuel pump module.

• NOTE: Non federal market vehicles only.

• NOTE: Make sure the fuel transfer pump is correctly orientated.

To install, reverse the removal procedure.

- Install a new O-ring seal.
- Tighten to 70 Nm.

Fuel Tank and Lines - Inertia Fuel Shutoff (IFS) Switch

Removal and Installation

Removal

1. Remove the cowl side trim panel. For additional information, refer to Section 501-05 Interior Trim and Ornamentation.
2. Disconnect the electrical connector.

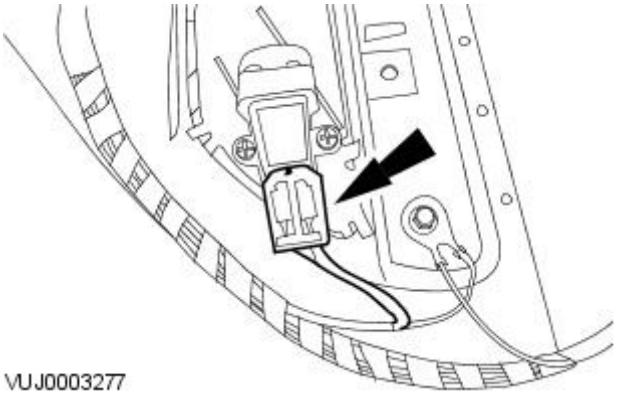

3. Remove the inertia fuel shutoff (IFS) switch.

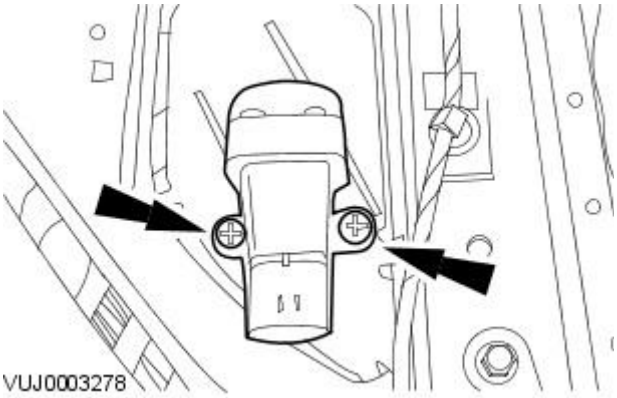

Installation

1. To install, reverse the removal procedure.

Fuel Tank and Lines - Fuel Tank Filler Pipe Hose

Removal and Installation

Removal

1. WARNINGS:

Place the vehicle in a quarantined area and arrange "No Smoking/Petrol Fumes" signs about the vehicle.

Do not smoke or carry lighted tobacco or open flame of any type when working on or near any fuel related components. Highly flammable vapors are always present and may ignite. Failure to follow these instructions may result in personal injury.

Do not carry or operate cellular phones when working on or near any fuel related components. Highly flammable vapours are always present and may ignite. Failure to follow these instructions may result in personal injury.

This procedure involves fuel handling. Be prepared for fuel spillage at all times and always observe fuel handling precautions. Failure to follow these instructions may result in personal injury.

Disconnect the battery ground cable. For additional information, refer to For additional information, refer to: Battery Disconnect and Connect (414-01 Battery, Mounting and Cables, General Procedures).
.

2. Remove the fuel filler cap.

3. Using a suitable suction device drain the fuel tank filler pipe.

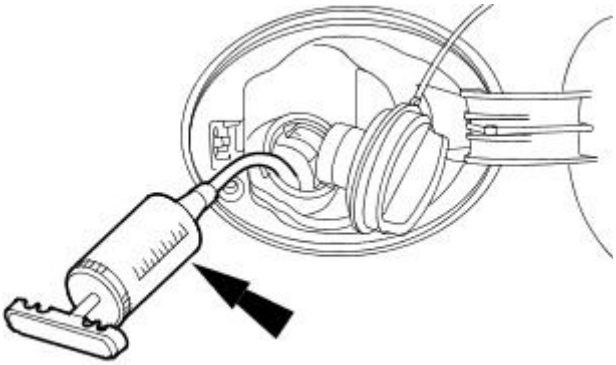

VUJ0003378

4. Raise and support the vehicle.
For additional information, refer to: Lifting (100-02 Jacking and Lifting, Description and Operation).

5. NOTE: Subframe shown removed for clarity.

Remove the fuel filler neck link hose.

- Release the two band clamps.
- Remove the fuel filler neck nut.

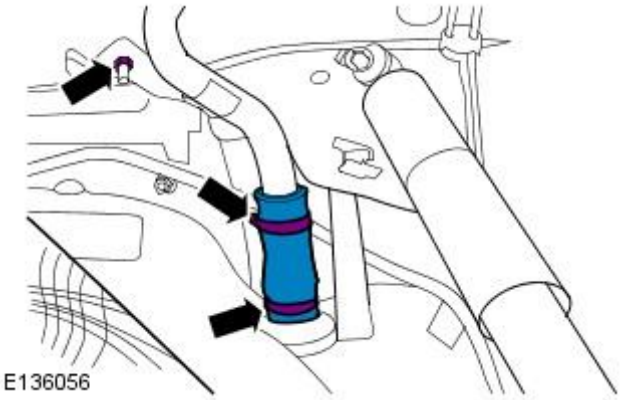

E136056

Installation

1. WARNINGS:

Do not smoke or carry lighted tobacco or open flame of any type when working on or near any fuel related components. Highly flammable vapors are always present and may ignite. Failure to follow these instructions may result in personal injury.

Do not carry or operate cellular phones when working on or near any fuel related components. Highly flammable vapours are always present

and may ignite. Failure to follow these instructions may result in personal injury.

This procedure involves fuel handling. Be prepared for fuel spillage at all times and always observe fuel handling precautions. Failure to follow these instructions may result in personal injury.

To install, reverse the removal procedure.

Published: 11-May-2011

Acceleration Control -

Torque Specifications

Description	Nm	lb-ft	lb-in
Accelerator pedal	9	-	80

Acceleration Control - Acceleration Control

Description and Operation

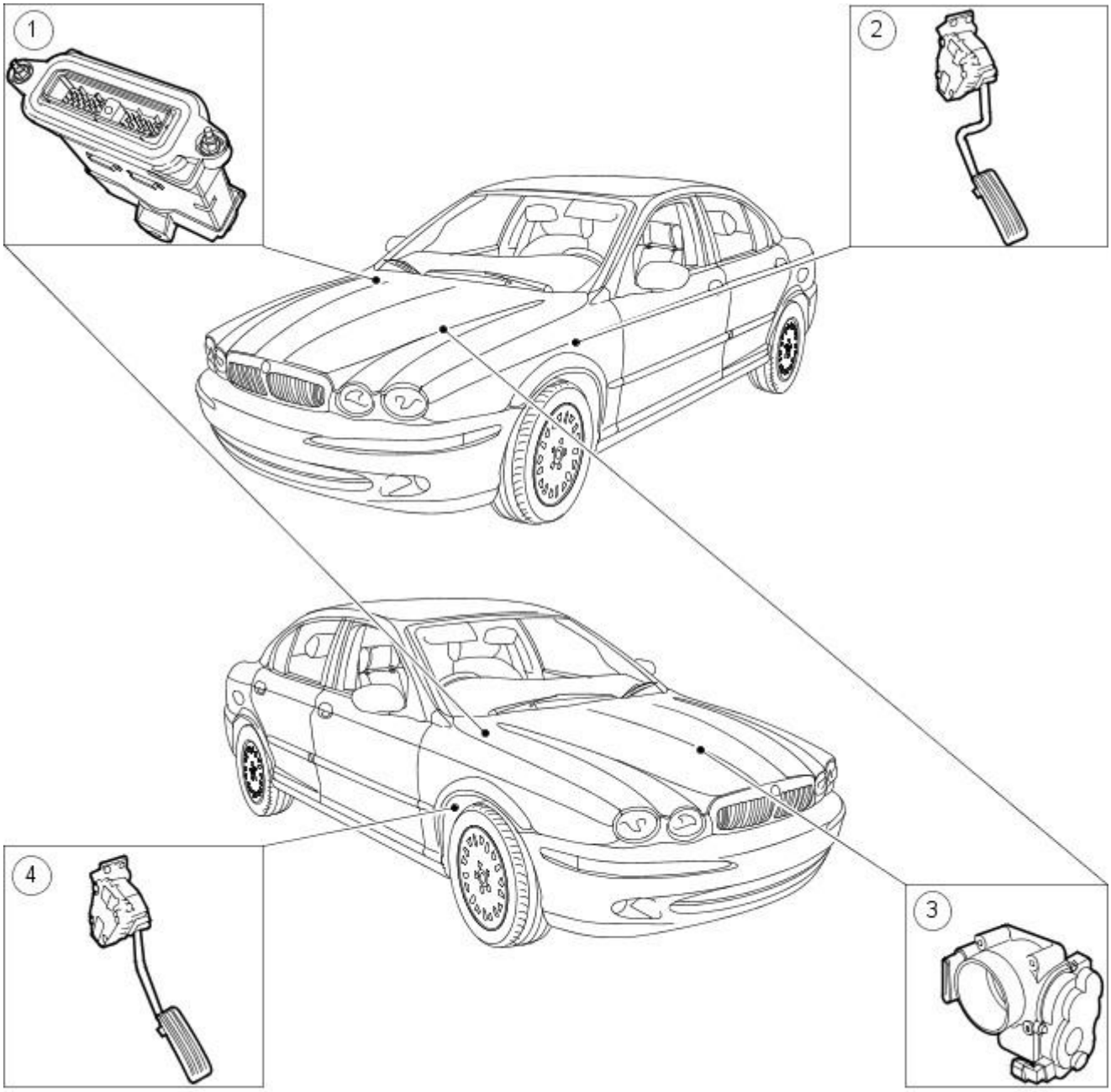

VUJ0004039

Item	Part Number	Description
1	—	Engine control module (ECM)
2	—	Accelerator pedal (left-hand drive vehicles)
3	—	Throttle body
4	—	Accelerator pedal (right-hand drive vehicles)

Vehicles with 2.0L engine

The acceleration control consists of the pedal and shaft assembly, accelerator cable and accelerator cable bracket.

WARNING: Make sure surrounding components such as wiring, hoses, sound insulation and floor carpeting are not contacting the sliding inner cable or the accelerator pedal and shaft. Failure to follow these instructions may result in personal injury.

The throttle is controlled by an accelerator cable attached to the accelerator pedal and shaft. The accelerator pedal and shaft should travel smoothly from the idle to the wide-open throttle positions. Hesitation on return or prevention of return to the idle position must not occur.

Vehicles with 2.5L, 3.0L or diesel engine

The accelerator pedal demand sensor provides an analogue voltage to the ECM which is proportional to the accelerator pedal position. A throttle position sensor provides a signal to the ECM which monitors throttle plate position.

After receiving these signals and monitoring the wheel speed signal output, coolant temperature, rotary switch status (automatic transmission) and inertia switch confirmation, the ECM then issues a throttle request signal. A motor within the throttle body rotates the throttle plate to a position which is relative to the position demanded.

Acceleration Control - Acceleration Control

Diagnosis and Testing

1. **1.** Verify the customer concern by operating the system.
2. **2.** Visually inspect for obvious signs of mechanical or electrical damage.
3. **3.** If an obvious cause for an observed or reported concern is found, correct the cause (if possible) before proceeding to the next step.
4. **4.** If the concern is not visually evident, use a fault code reader to retrieve the fault codes before proceeding to the Symptom Chart.

Symptom Chart

Symptom	Possible Sources	Action
DTC P1240, P1241, P1242	* Accelerator pedal power supply circuit out of range	* GO to Pinpoint Test A.
DTC P1122, P1123, P1215, P1216, P1344	* Accelerator pedal demand sensor output circuit out of range	* GO to Pinpoint Test B.
DTC P0121, P0122, P0123	* Throttle position sensor circuit out of range	* GO to Pinpoint Test C.
DTC P1251, P1658, P1631, P1657	* Throttle motor relay failure	* GO to Pinpoint Test D.
DTC P1243	* Accelerator pedal demand sensor ground; open circuit	* GO to Pinpoint Test E.
DTC P1506, P1507, P1611, P1633	* Engine control module (ECM) failure	* INSTALL a new ECM. For additional information, refer toSection 303-14A Electronic Engine ControlsSection 303-14B Electronic Engine Controls.
DTC P1254, P1250	* Throttle limp home spring malfunction.	* INSTALL a new throttle motor. For additional information refer toSection 303-14A Electronic Engine ControlsSection 303-14B Electronic Engine Controls.

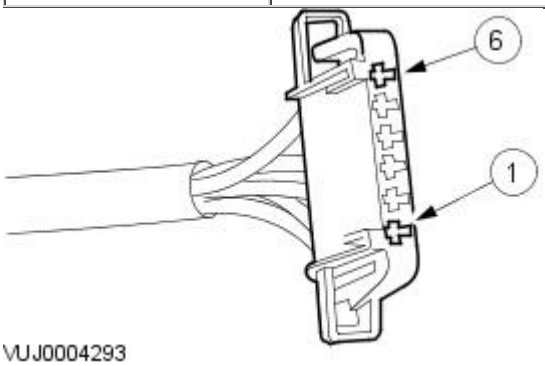

VUJ0004293

Accelerator Pedal Demand Sensor Electrical Connector (PA1, Harness Side)

Pin Number	Circuit Function	Circuit Color
1	Sensor Ground	Black/Green
2	Sensor Ground	Black/Green
3	Output Signal	Red
4	Sensor Power Supply (5 volts)	Orange/Yellow
5	Sensor Power Supply (5 volts)	Yellow
6	Output Signal	Yellow

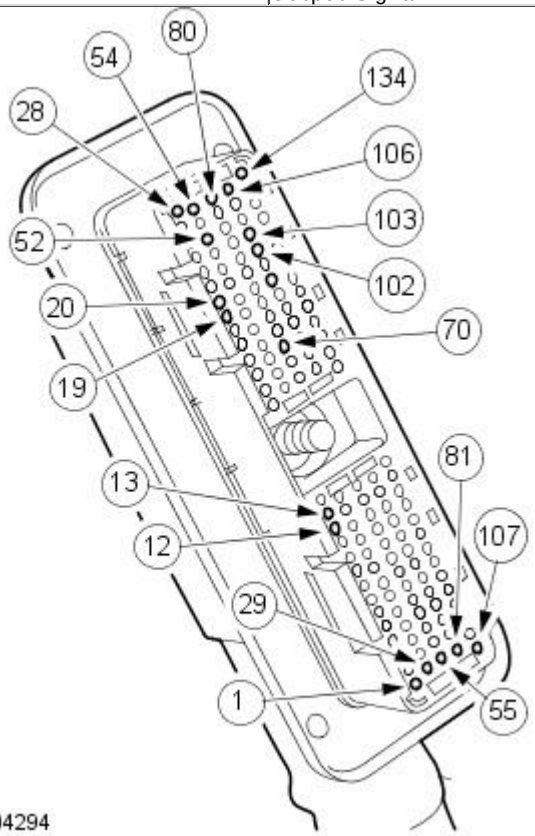

VUJ0004294

Engine Control Module (ECM) Electrical Connector (EN16, Harness Side)

Pin Number	Circuit Function	Circuit Color
12	Output (5 volts)	Orange/Yellow
13	Output (5 volts)	Yellow
19	Ground	Black/Green
20	Ground	Black/Green
52	Throttle Relay Ground	Green/Red
75	Input	Purple
76	Input	Yellow
80	Throttle motor	Green
102	Input	Red
103	Input	Yellow
106	Throttle motor	Red
134	Power Supply (12 volts)	Red/White

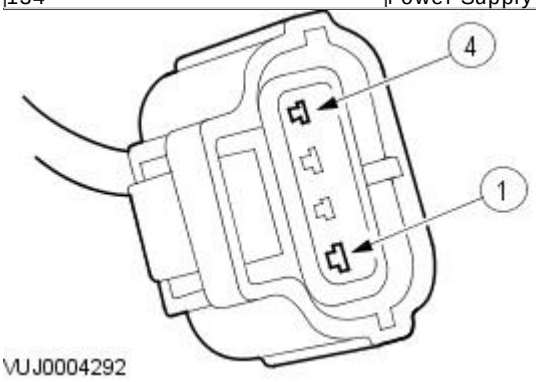

Throttle Position Sensor Electrical Connector (EN13, Harness Side)

Pin Number	Circuit Function	Circuit Color
1	Sensor Ground	Black/Green
2	Output Signal	Yellow
3	Output Signal	Purple
4	Sensor Power Supply (5 volts)	Orange/Yellow

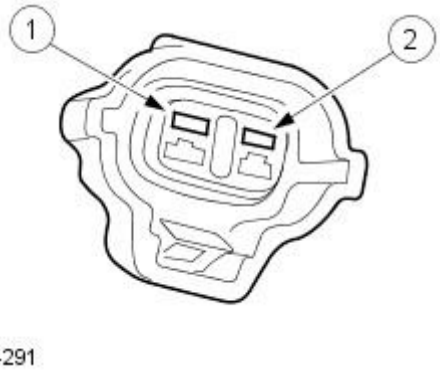

Throttle Motor Electrical Connector (EN10, Harness Side)

Pin Number	Circuit Function	Circuit Color
80	Throttle motor	Green
106	Throttle motor	Red

PINPOINT TEST A : DTC P1240, P1241, P1242	
TEST CONDITIONS	**DETAILS/RESULTS/ACTIONS**
A1: CHECK THE POWER SUPPLY TO THE ACCELERATOR PEDAL DEMAND SENSOR	
	1 TURN the ignition switch to the RUN position.
	2 Measure the voltage between electrical connector PA1-5 and ground.
	3 Measure the voltage between electrical connector PA1-4 and ground.
	Is the voltage less than 4.5 volts? **Yes** GO to A2. . **No** DIAGNOSE the electronic engine control system. For additional information, refer toSection 303-14A Electronic Engine ControlsSection 303-14B Electronic Engine Controls.
A2: CHECK CONTINUITY OF THE ACCELERATOR PEDAL DEMAND SENSOR POWER SUPPLY CIRCUIT	
	1 Turn the ignition switch to the OFF position.
	2 Disconnect the ECM electrical connector EN16 and the accelerator pedal electrical connector PA1.
	3 Measure the resistance between EN16-13 and PA1-5.
	4 Measure the resistance between EN16-12 and PA1-4.
	Is the resistance less than 5 ohms? **Yes** GO to A3. . **No** REPAIR the power supply circuit from the ECM to the accelerator pedal. CLEAR the DTC. TEST the system for normal operation.
A3: CHECK THE ACCELERATOR PEDAL DEMAND SENSOR POWER SUPPLY FOR A SHORT CIRCUIT TO GROUND	
	1 Measure the resistance between PA1-5 and ground.
	2 Measure the resistance between PA1-4 and ground.

	Is the resistance greater than 10,000 ohms? **Yes** DIAGNOSE the electronic engine control system. For additional information, refer toSection 303-14A Electronic Engine ControlsSection 303-14B Electronic Engine Controls. **No** REPAIR the power supply circuit from the ECM to the accelerator pedal. CLEAR the DTC. TEST the system for normal operation.

PINPOINT TEST B : DTC P1122, P1123, P1215, P1216, P1344	
TEST CONDITIONS	**DETAILS/RESULTS/ACTIONS**
B1: CHECK THE ACCELERATOR PEDAL DEMAND SENSOR OUTPUT	
	1 Turn the ignition switch to the RUN position.
	2 Measure the voltage between electrical connector PA1-6 and ground with the accelerator pedal released and with the accelerator pedal at full throttle.
	3 Measure the voltage between electrical connector PA1-3 and ground with the accelerator pedal released and with the accelerator pedal at full throttle.
	Does the voltage vary between 0.3 volts and 5 volts? **Yes** GO to B4. . **No** GO to B2. .
B2: CARRY OUT AN ACCELERATOR PEDAL POSITION SENSOR COMPONENT CHECK	
	1 Remove the accelerator pedal. For additional information, refer to Pedal.
	2 Measure the resistance between pin 1 and pin 6 of the accelerator pedal.
	3 Measure the resistance between pin 2 and pin 3 of the accelerator pedal.
	Is the resistance between pin 1 and pin 6 between 546 and 1134 ohms, and between pin 2 and pin 3 between 975 and 2025 ohms? **Yes** GO to B3. . **No** INSTALL a new accelerator pedal. For additional information, refer to Pedal. CLEAR the DTC. TEST the system for normal operation.
B3: CHECK THE ACCELERATOR PEDAL DEMAND SENSOR CIRCUIT FOR A SHORT TO GROUND	
	1 Disconnect the ECM electrical connector EN16.
	2 Measure the resistance between electrical connector PA1-6 and ground.
	3 Measure the resistance between electrical connector PA1-3 and ground.
	Is the resistance greater than 10,000 ohms? **Yes** GO to B4. . **No** REPAIR the accelerator pedal demand sensor circuit from the ECM to the accelerator pedal. CLEAR the DTC. TEST the system for normal operation.
B4: CHECK THE ACCELERATOR PEDAL DEMAND SENSOR CIRCUIT FOR OPEN CIRCUIT	
	1 Disconnect the ECM electrical connector EN16 and the accelerator pedal electrical connector PA1.
	2 Measure the resistance between EN16-103 and PA1-6.
	3 Measure the resistance between EN16-102 and PA1-3.
	Is the resistance less than 5 ohms? **Yes** DIAGNOSE the electronic engine control system. For additional information, refer toSection 303-14A Electronic Engine ControlsSection 303-14B Electronic Engine Controls. **No** REPAIR the accelerator pedal demand sensor circuit from the ECM to the accelerator pedal. CLEAR the DTC. TEST the system for normal operation.

PINPOINT TEST C : DTC P0121, P0122, P0123	
TEST CONDITIONS	**DETAILS/RESULTS/ACTIONS**
C1: CHECK THE POWER SUPPLY TO THE THROTTLE POSITION SENSOR	
	1 Turn the ignition switch the to the RUN position.
	2 Measure the voltage between the throttle position sensor electrical connector EN13-4 and ground.
	Is the voltage less than 4.5 volts? **Yes** GO to C2. . **No** GO to C4. .
C2: CHECK THE THROTTLE POSITION SENSOR POWER SUPPLY CIRCUIT FOR OPEN CIRCUIT	
	1 Turn the ignition switch to the OFF position.
	2 Disconnect the ECM electrical connector EN16 and the throttle position sensor electrical connector EN13.
	3 Measure the resistance between EN16-12 and EN13-4.
	Is the resistance less than 5 ohms? **Yes** GO to C3. . **No** REPAIR the throttle position sensor power supply circuit from the ECM to the throttle position sensor. CLEAR the DTC. TEST the system for normal operation.
C3: CHECK THE THROTTLE POSITION SENSOR POWER SUPPLY CIRCUIT FOR A SHORT TO GROUND	
	1 Measure the resistance between EN13-4 and ground.
	Is the resistance greater than 10,000 ohms? **Yes** DIAGNOSE the electronic engine control system. For additional information, refer toSection 303-14A Electronic Engine ControlsSection 303-14B Electronic Engine Controls. **No** REPAIR the throttle position sensor power supply circuit from the ECM to the throttle position sensor. CLEAR the DTC. TEST the system for normal operation.
C4: CHECK THE THROTTLE POSITION SENSOR GROUND CIRCUIT	

	1 Turn the ignition switch to the OFF position.
	2 Disconnect the throttle position sensor electrical connector EN13.
	3 Measure the resistance between EN13-1 and ground.
	Is the resistance less than 5 ohms? **Yes** GO to C6. . **No** GO to C5. .
C5: CHECK THE THROTTLE POSITION SENSOR GROUND WIRE FOR OPEN CIRCUIT	
	1 Disconnect the ECM electrical connector EN16 and the throttle position sensor electrical connector EN13.
	2 Measure the resistance between EN16-13 and EN13-1.
	Is the resistance less than 5 ohms? **Yes** GO to C6. . **No** REPAIR the throttle position sensor ground circuit from the ECM to the throttle position sensor. CLEAR the DTC. TEST the system for normal operation.
C6: CHECK THE THROTTLE POSITION SENSOR	
	1 Measure the resistance between EN13-2 and EN13-4.
	2 Measure the resistance between EN13-3 and EN13-4.
	Are the resistor values the same? **Yes** GO to C7. . **No** INSTALL a new throttle position sensor. For additional information refer toSection 303-14A Electronic Engine ControlsSection 303-14B Electronic Engine Controls.
C7: CHECK CONTINUITY OF THE THROTTLE POSITION SENSOR OUTPUT CIRCUIT	
	1 Measure the resistance between EN16-75 and EN13-3.
	2 Measure the resistance between EN16-76 and EN13-2.
	Is the resistance less than 5 ohms? **Yes** GO to C8. . **No** REPAIR the circuit from the ECM to the throttle position sensor. CLEAR the DTC. TEST the system for normal operation.
C8: CHECK THE THROTTLE POSITION SENSOR OUTPUT CIRCUIT FOR A SHORT TO GROUND	
	1 Measure the resistance between EN13-3 and ground.
	2 Measure the resistance between EN13-2 and ground.
	Is the resistance greater than 10,000 ohms? **Yes** DIAGNOSE the electronic engine control system. For additional information, refer toSection 303-14A Electronic Engine ControlsSection 303-14B Electronic Engine Controls. **No** REPAIR the circuit from the ECM to the throttle position sensor. CLEAR the DTC. TEST the system for normal operation.

PINPOINT TEST D : DTC P1251, P1658, P1631, P1657	
TEST CONDITIONS	**DETAILS/RESULTS/ACTIONS**
D1: CHECK THE THROTTLE MOTOR RELAY	
	1 Turn the ignition switch to the RUN position.
	Does the throttle relay make an audible click? **Yes** GO to D2. . **No** GO to D8. .
D2: CHECK THE ECM POWER SUPPLY FROM THE THROTTLE MOTOR RELAY	
	1 Measure the voltage between the throttle motor relay connector JB34-138 and ground.
	Is the voltage greater than 10 volts? **Yes** GO to D3. . **No** GO to D4. .
D3: CHECK CONTINUITY OF THE ECM POWER SUPPLY WIRE FROM THE THROTTLE MOTOR RELAY	
	1 Turn the ignition switch to the OFF position.
	2 Disconnect the ECM electrical connector EN16 and remove the throttle motor relay.
	3 Measure the resistance between the throttle motor relay electrical connector JB34-138 and the ECM electrical connector EN16-134.
	Is the resistance less than 5 ohms? **Yes** DIAGNOSE the electronic engine control system. For additional information, refer toSection 303-14A Electronic Engine ControlsSection 303-14B Electronic Engine Controls. **No** REPAIR the ECM power supply wire from the throttle motor relay. CLEAR the DTC. TEST the system for normal operation.
D4: CHECK FUSE 33 IN THE ENGINE COMPARTMENT FUSE BOX.	
	1 Check the fuse.
	Is the fuse OK? **Yes** GO to D5. . **No** GO to D6. .
D5: CHECK THE THROTTLE MOTOR RELAY POWER SUPPLY CIRCUIT	
	1 Remove the throttle motor relay.
	2 Measure the voltage between the throttle motor relay connector JB34-139 and ground.

	Is the voltage less than 10 volts? **Yes** REPAIR the throttle motor relay power supply circuit. CLEAR the DTC. TEST the system for normal operation. **No** INSTALL a new throttle motor relay. CLEAR the DTC. TEST the system for normal operation.
D6: CHECK FUSE 33 FOR A SHORT TO GROUND	
	1 Measure the resistance between fuse 33 and ground.
	Is the resistance greater than 10,000 ohms? **Yes** INSTALL a new fuse. CLEAR the DTC. TEST the system for normal operation. **No** REPAIR short to ground between engine compartment fuse box and the throttle motor relay. INSTALL a new fuse. CLEAR the DTC. TEST the system for normal operation.
D7: CHECK FUSE 36 IN THE ENGINE COMPARTMENT FUSE BOX	
	1 Check the fuse.
	Is the fuse OK? **Yes** GO to D7. . **No** GO to D10. .
D8: CHECK THE POWER SUPPLY CIRCUIT TO THE THROTTLE MOTOR RELAY COIL	
	1 Turn the ignition switch to the RUN position.
	2 Measure the voltage between the throttle motor relay connector JB34-137 and ground.
	Is the voltage greater than 10 volts? **Yes** GO to D11. . **No** GO to D9. .
D9: CHECK CONTINUITY OF THE POWER SUPPLY CIRCUIT TO THE THROTTLE MOTOR RELAY COIL	
	1 Disconnect the ECM electrical connector EN16 and remove the throttle motor relay.
	2 Measure the resistance between the throttle motor relay electrical connector JB34-137 and the ECM electrical connector EN16-52.
	Is the resistance less than 5 ohms? **Yes** GO to D11. . **No** REPAIR the throttle motor relay coil power supply circuit from the engine compartment fuse box. CLEAR the DTC. TEST the system for normal operation.
D10: CHECK FUSE 36 OF THE PASSENGER COMPARTMENT FUSE BOX FOR A SHORT TO GROUND	
	1 Measure the resistance between fuse 36 of the passenger compartment fuse box and ground.
	Is the resistance less than 10,000 ohms? **Yes** REPAIR short to ground between the engine compartment fuse box and the throttle motor relay coil. CLEAR the DTC. TEST the system for normal operation. **No** INSTALL a new fuse. CLEAR the DTC. TEST the system for normal operation.
D11: CHECK CONTINUITY OF THE THROTTLE MOTOR RELAY COIL	
	1 Remove the throttle motor relay (if not already removed).
	2 Measure the resistance between terminal 1 and terminal 2 of the throttle motor relay.
	Is the resistance between 70 and 90 ohms? **Yes** GO to D12. . **No** INSTALL a new throttle motor relay. CLEAR the DTC. TEST the system for normal operation.
D12: CHECK CONTINUITY OF THE THROTTLE MOTOR RELAY GROUND CIRCUIT	
	1 Disconnect the ECM electrical connector EN16.
	2 Measure the resistance between the throttle motor relay electrical connector JB34-135 and the ECM electrical connector EN16-52.
	Is the resistance less than 5 ohms? **Yes** DIAGNOSE the electronic engine control system. For additional information, refer toSection 303-14A Electronic Engine ControlsSection 303-14B Electronic Engine Controls. **No** REPAIR the throttle motor relay ground circuit from the ECM to the engine compartment fuse box. CLEAR the DTC. TEST the system for normal operation.

PINPOINT TEST E : DTC P1254, P1250	
TEST CONDITIONS	**DETAILS/RESULTS/ACTIONS**
E1: CHECK THE ACCELERATOR PEDAL DEMAND SENSOR GROUND CIRCUIT	
	1 Disconnect the ECM electrical connector EN16 and the accelerator pedal electrical connector PA1.
	2 Measure the resistance between EN16-19 and PA1-1.
	3 Measure the resistance between EN16-20 and PA1-2.
	Is the resistance less than 5 ohms? **Yes** DIAGNOSE the electronic engine control system. For additional information, refer toSection 303-14A Electronic Engine ControlsSection 303-14B Electronic Engine Controls. **No** REPAIR the accelerator pedal demand sensor ground circuit from the accelerator pedal to the ECM. CLEAR the DTC. TEST the system for normal operation.

Acceleration Control - Accelerator Cable Adjustment2.0L NA V6 - AJV6

General Procedures

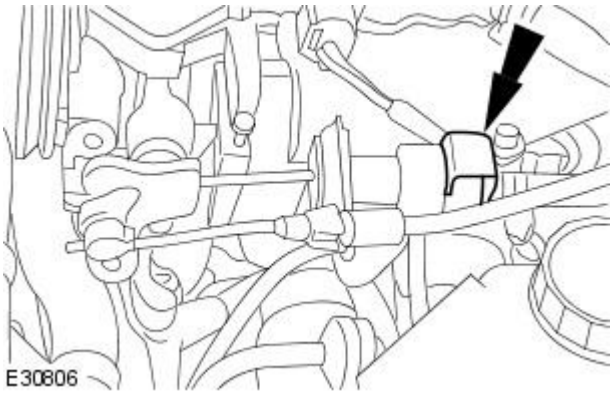

1. Remove the primary cable retaining clip.

2. NOTE: Make sure the accelerator cable is seated fully in the retaining bracket.

Fully depress the accelerator pedal and hold down.

3. NOTE: Make sure the throttle actuator is in the fully open position.

Install the retaining clip.

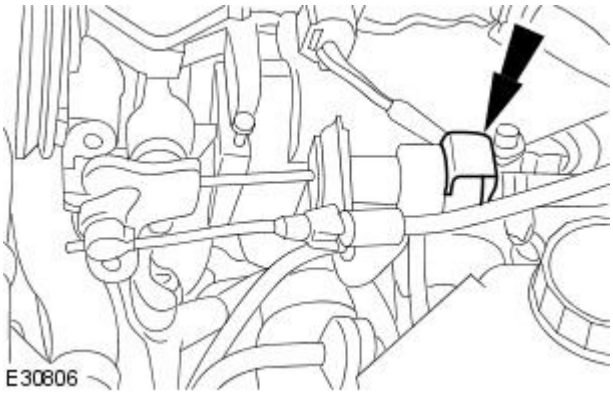

4. Release the accelerator pedal.

5. Fully depress the accelerator pedal and hold down.

6. If the accelerator actuator is not in the fully open position, repeat the above procedure.

Acceleration Control - Accelerator Cable2.0L NA V6 - AJV6

Removal and Installation

Removal

1. Disconnect the battery ground cable.
For additional information, refer to Section 414-01 Battery, Mounting and Cables.

2. Detach the accelerator cable.

1. Position the accelerator actuator to the fully open position.
2. Detach the accelerator cable.

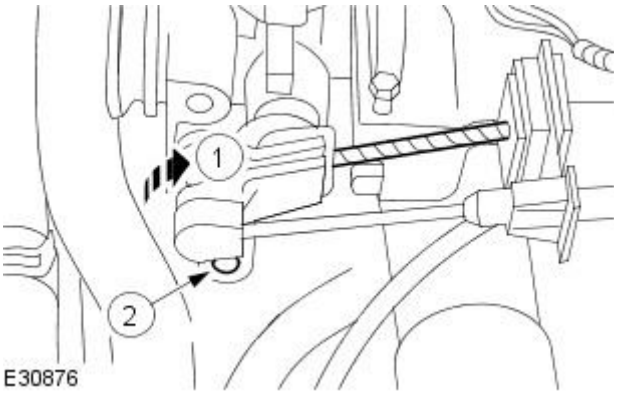

3. Detach the outer accelerator cable.

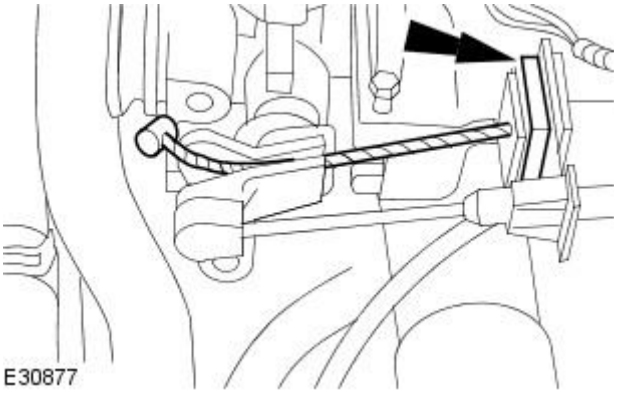

4. Detach the accelerator cable from the accelerator pedal.

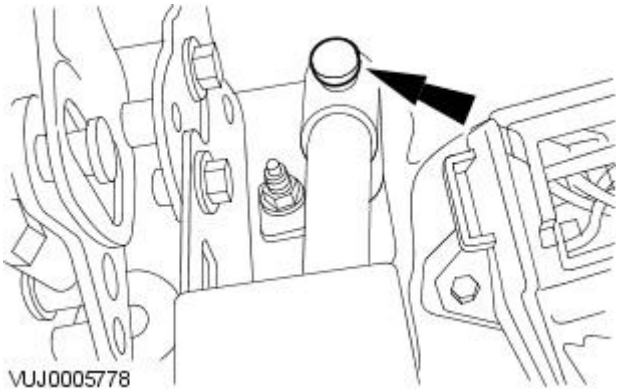

5. Disconnect the engine control module (ECM) electrical connector.

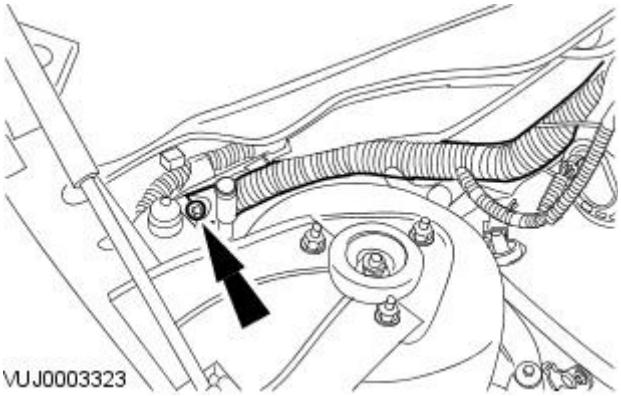

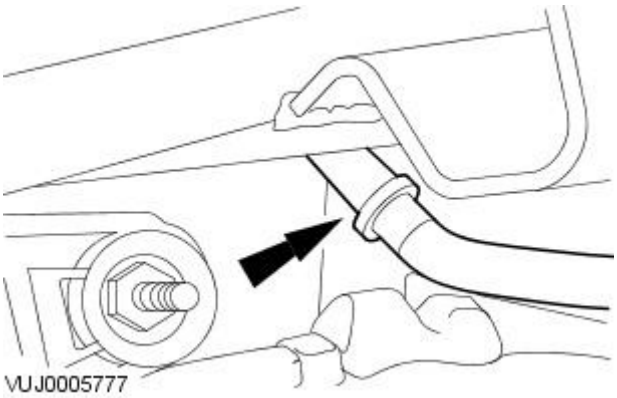

6. Remove the accelerator cable.

- Detach the accelerator cable grommet.

Installation

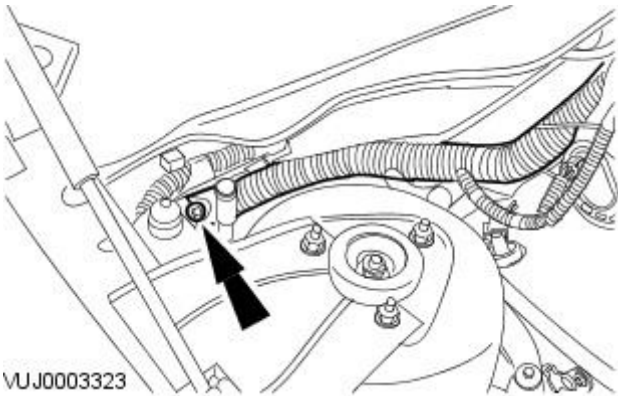

1. To install, reverse the removal procedure.

2. Tighten to 5 Nm.

3. Adjust the accelerator cable.
For additional information, refer to Accelerator Cable Adjustment-2.0L in this section.

Acceleration Control - Accelerator Pedal

Removal and Installation

Removal

Vehicles with 2.0L engine

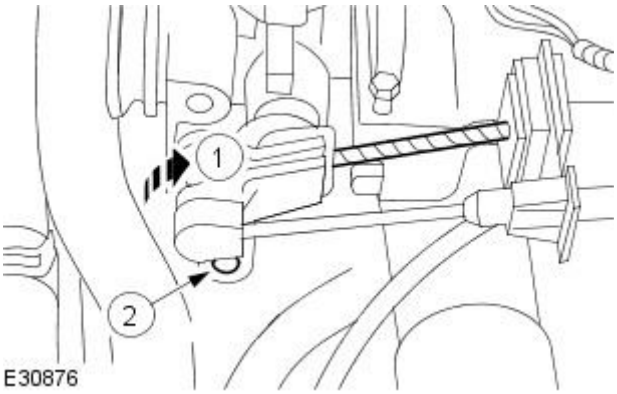

1. Detach the accelerator cable.

1. Position the accelerator actuator to the fully open position.
2. Detach the accelerator cable.

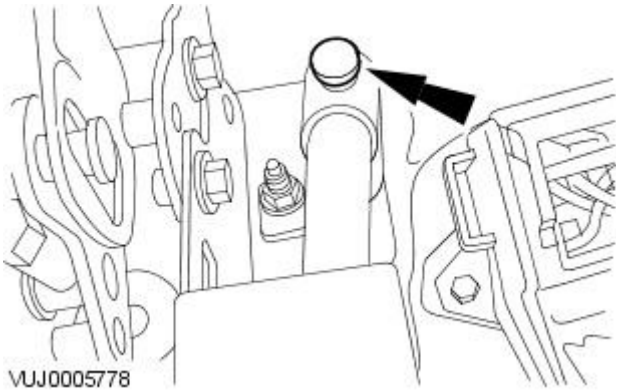

2. Detach the accelerator cable.

Vehicles with 2.5L, 3.0L or diesel engine

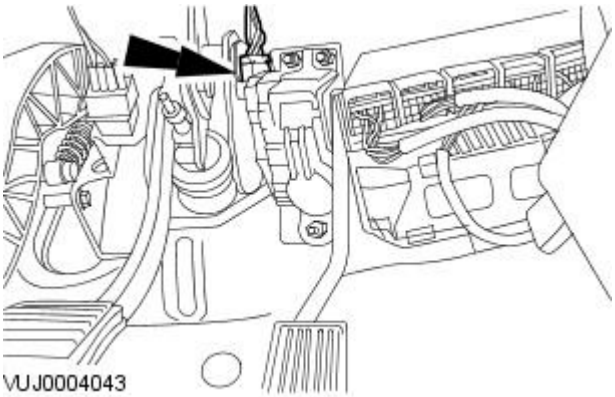

3. Disconnect the accelerator pedal electrical connector.

All vehicles

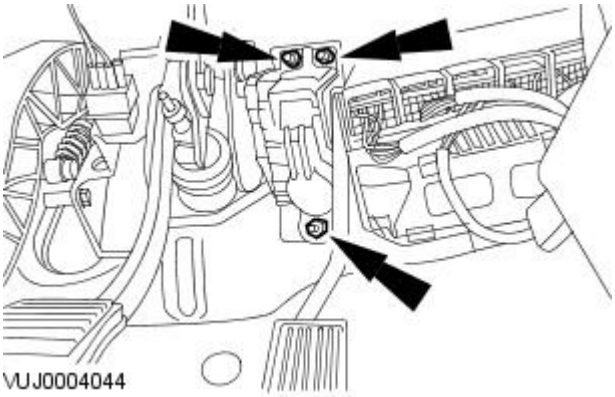

4. NOTE: Vehicles with 2.5L, 3.0L or diesel engine shown, 2.0L similar.

Remove the accelerator pedal retaining nuts.

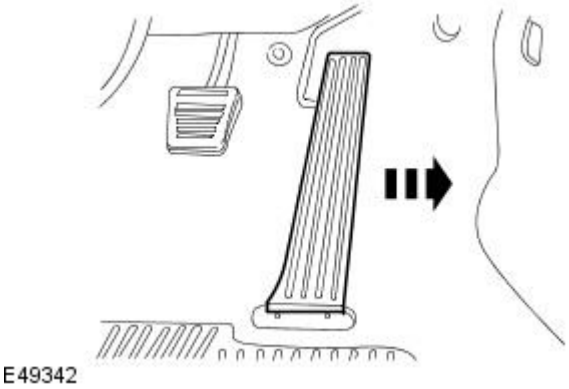

5. Remove the accelerator pedal.

Installation

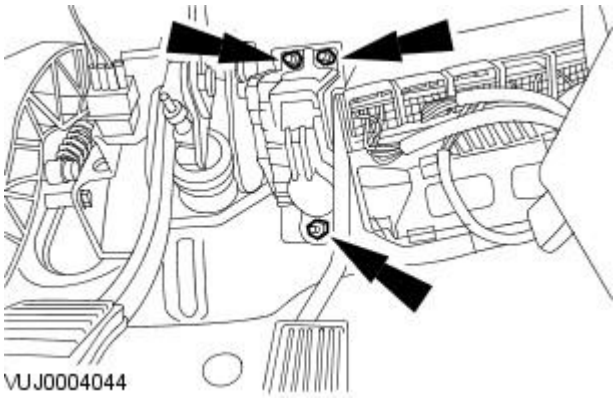

1. NOTE: Vehicles with 2.5L, 3.0L or diesel engine shown, 2.0L similar.

To install, reverse the removal procedure.

- Tighten to 9 Nm.

Speed Control -

Torque Specifications

Description	Nm	lb-ft	lb-in
Cruise control switch retaining screws	3	-	27

Speed Control - Speed Control

Description and Operation

2.0L vehicles

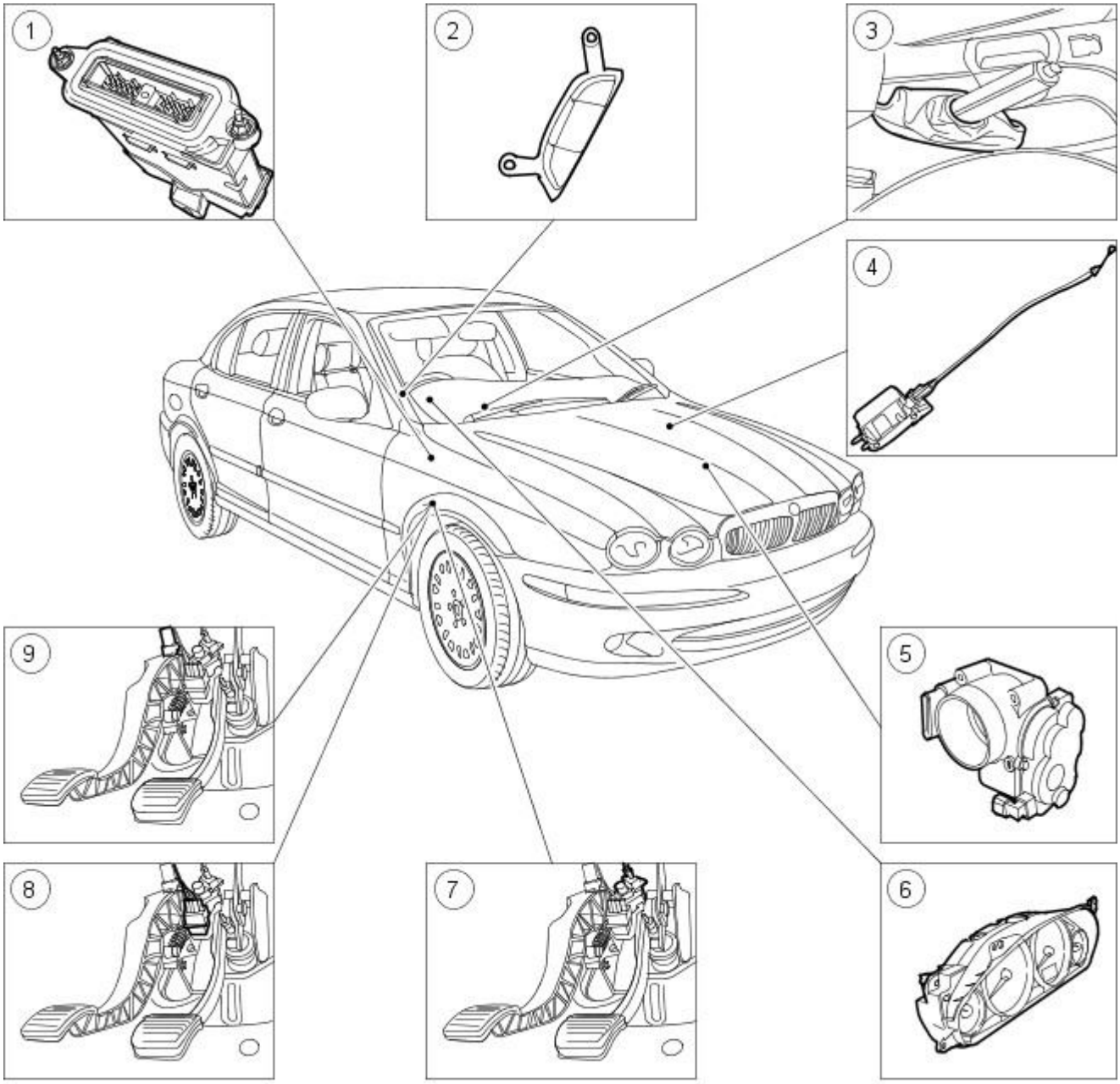

E31059

Item	Part Number	Description
1	—	Engine control module (ECM)
2	—	Cruise control switch
3	—	Handbrake switch
4	—	Cruise control module
5	—	Throttle body
6	—	Instrument cluster (IC)
7	-	Speed control deactivator switch (brake pedal position primary switch, black)
8	-	Speed control deactivator switch (brake pedal position secondary switch)
9	-	Speed control deactivator switch (clutch pedal position switch, red, vehicles fitted with manual transmission)

Vehicles with 2.5L, 3.0L or diesel engine

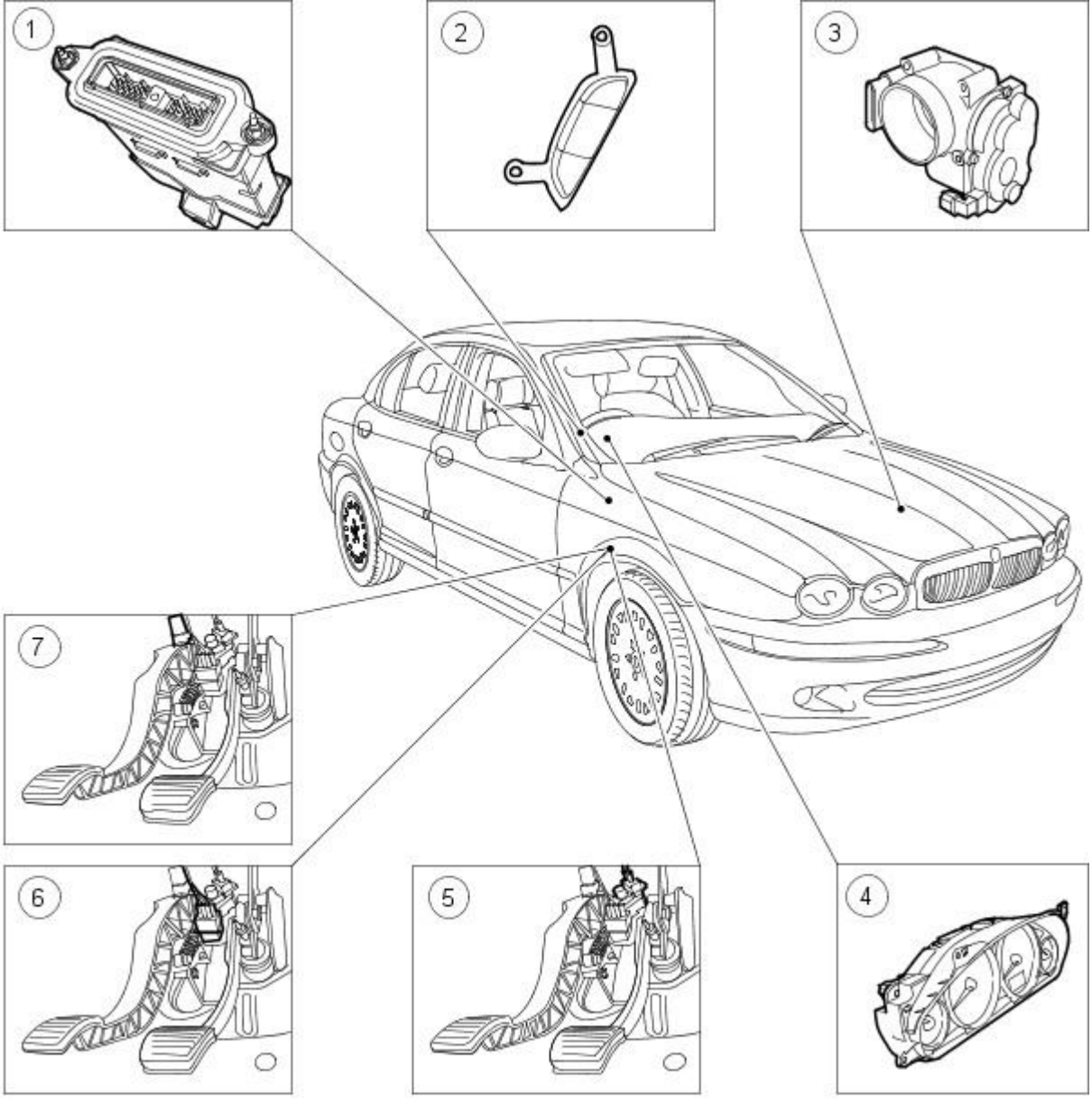

VUJ0004372

Item	Part Number	Description
1	—	Engine control module (ECM)
2	—	Cruise control switch
3	—	Throttle body
4	—	Instrument cluster (IC)
5	—	Speed control deactivator switch (brake pedal position secondary switch, green)
6	—	Speed control deactivator switch (brake pedal position primary switch, black)
7	—	Speed control deactivator switch (clutch pedal position switch, red, vehicles fitted with manual transmission)

System operation

The speed control system operates between the following speeds:

- On vehicles with 2.0L engine the speed range is 40km/h (25mile/h) and 192km/h (120mile/h). On vehicles with 2.5L, 3.0L or diesel engine the speed range is 40km/h (25mile/h) and 180km/h (112mile/h).

The speed control system is designed to maintain a selected vehicle speed between these two parameters.

Vehicles with 2.0L engine

Any of the deactivator switches operated by the handbrake, footbrake or clutch pedal (vehicles fitted with manual transmission) or by information sent by the engine control module (ECM) to the cruise control module will interrupt the speed control operation. This will allow the system to go into STANDBY mode. Operating the RESUME switch with the system in STANDBY mode will allow the vehicle to accelerate until the last set speed is resumed, providing the vehicle speed remains between the upper and lower operating limits of the speed control system.

Vehicles with 2.5L, 3.0L or diesel engine

Any of the deactivator switches operated by the brake or clutch pedal (vehicles fitted with manual transmission) will interrupt the speed control operation by switching the signal to the ECM. This will allow the system to go into STANDBY mode. Operating the RESUME switch with the system in STANDBY mode will allow the vehicle to accelerate until the last set speed is resumed, providing the vehicle speed remains between the upper and lower operating limits of the speed control system.

Vehicle Speed Signal

The vehicle speed signal for the speed control system comes from the anti-lock control system (ABS) through the control area network (CAN) via the (EMS).

Actuator Switches

ON Switch

When the ON switch is operated the speed control system is activated and providing the vehicle is travelling at a speed greater than 40km/h (25mile/h), the speed control system will accept the speed inputs. The instrument cluster (IC) will inform the driver that the speed control has been activated.

OFF Switch

When the OFF switch is operated the speed control system is deactivated and the speed setting stored in the ECM memory will be erased. The speed control warning in the IC will be extinguished.

RESUME Switch

When the RESUME switch is operated with the system in STANDBY mode, providing the vehicle speed is above, 40km/h (25mile/h) the vehicle will accelerate until the last set speed is reached.

The RESUME switch will not function if:

- The OFF switch has been operated.
- The ignition switch has been turned to the OFF position.
- The vehicle speed is below 40km/h (25mile/h).
- There is a loss of drive between the driveline system and the road wheels.
- The diagnostic system has detected a fault with the speed control system.

CANCEL Switch

When the CANCEL switch is operated with the vehicle speed control system active, the system will enter STANDBY mode.

SET Switch

When the SET switch is operated, providing the vehicle is travelling above 40km/h (25mile/h) the system allows the vehicle speed to be maintained to ± 2km/h (1 mile/h). When the vehicle speed control system is active, operating the SET switch will increase or decrease the vehicle speed respectively until the switch is released. If the SET switch is operated momentarily, the vehicle speed will increase or decrease in 2km/h (1 mile/h) increments.

Handbrake switch (vehicles with 2.0L engine only)

If the handbrake is operated when the speed control system is active, the cruise control module will receive a signal from the handbrake position switch via the (EMS). This will put the system into STANDBY mode and allow the vehicle to return to a speed demanded by the throttle pedal position.

Brake Pedal Position Switches

Vehicles with 2.0L engine

If the brake pedal is operated when the speed control system is active, the cruise control module will receive a signal from the brake pedal position primary and secondary switches. This will put the system into STANDBY mode and allow the vehicle to return to a speed demanded by the throttle pedal position.

Vehicles with 2.5L, 3.0L or diesel engine

If the brake pedal is operated when the speed control system is active, the ECM will receive a signal from the brake pedal position primary and secondary switches. This will put the system into STANDBY mode and allow the vehicle to return to a speed demanded by the throttle pedal position.

The brake pedal position primary switch is also used to operate the stop lamps.

Clutch Pedal Position Switch (vehicles fitted with manual transmission)

Vehicles with 2.0L or diesel engine

If the clutch pedal is operated when the speed control system is active, the cruise control module will receive a signal from the clutch pedal position (CPP) switch. This will put the system into STANDBY mode and allow the vehicle to return to a speed demanded by the throttle pedal.

Vehicles with 2.5L, 3.0L or diesel engine

If the clutch pedal is operated when the speed control system is active, the ECM will receive a signal from the clutch pedal position (CPP) switch. This will put the system into STANDBY mode and allow the vehicle to return to a speed demanded by the throttle pedal.

Throttle Body

The throttle body moves the throttle plate to a position demanded by the throttle pedal or the speed control system.

Cruise control module (vehicles with 2.0L engine only)

The cruise control module receives information from the sensors and the ECM, which enables it to hold the throttle lever in a set position, this is achieved via a cable which is attached to the throttle lever. The cruise control actuator cable is permanently attached to the cruise control module and cannot be replaced or adjusted.

Published: 11-May-2011

Speed Control - Speed Control2.0L NA V6 - AJV6

Diagnosis and Testing

The complexity of the electronics involved with the vehicle speed control system and the communication network which is connected to the system, preclude the use of workshop general electrical test equipment. For diagnosis and testing of the vehicle speed control system, refer to the Jaguar approved diagnostic system.

Inspection and Verification

1. **1.** Verify the customer concern.
2. **2.** Visually inspect for obvious signs of mechanical or electrical damage.

Visual Inspection Chart

Mechanical	Electrical
• Throttle body mechanism	• Module • Switch(es) • Instrument cluster

3. **3.** If an obvious cause for an observed or reported concern is found, correct the cause (if possible) before proceeding to the next step.
4. **4.** If the cause is not visually evident, verify the symptom and refer to the Jaguar approved diagnostic system.
5. **5.** The DTC summaries are generated to support the Jaguar approved diagnostic system, but also provide the basis for diagnosis of OBD related concerns using a suitable generic scan tool, in conjunction with the electrical guides. Until the DTC summaries and electrical guides are available, the speed control system can only be accurately diagnosed using the Jaguar approved diagnostic system. For additional information, refer to Dealer technical support.

Speed Control - Speed Control2.5L NA V6 - AJV6 / 3.0L NA V6 - AJ27

Diagnosis and Testing

The complexity of the electronics involved with the vehicle speed control system and the communication network which is connected to the system, preclude the use of workshop general electrical test equipment. For diagnosis and testing of the vehicle speed control system, refer to the Jaguar approved diagnostic system.

The Jaguar approved diagnostic system tests and analyses all functions of the vehicle speed control system. The following DTCs may be tested using a suitable meter.

Inspection and Verification

1. **1.** Verify the customer concern.
2. **2.** Visually inspect for obvious signs of mechanical or electrical damage.

Visual Inspection Chart

Mechanical	Electrical
• Throttle body mechanism	• Throttle body actuator • Module • Switch(es) • Instrument cluster

3. **3.** If an obvious cause for an observed or reported concern is found, correct the cause (if possible) before proceeding to the next step.
4. **4.** If the cause is not visually evident, verify the symptom and refer to the Jaguar approved diagnostic system.

Diagnostic Trouble Code (DTC) Index

DTC	Description	Possible Source	Action
P0568	Speed control input signal low/high resistance, open circuit.	• Speed control switches internal steering wheel circuit, open circuit, high resistance. • Cassette reel open circuit, high resistance. • Cassette reel to engine control module (ECM) circuit, open circuit, high resistance	GO to Pinpoint Test A.
P0565	Speed control ON/OFF switch fault.	• Speed control switches internal steering wheel circuit, short to ground. • Cassette reel short to ground. • Cassette reel to ECM circuit short to ground. • ON/OFF switch failure. (Stuck on)	GO to Pinpoint Test B.
P0566	Speed control CANCEL switch fault.	• Speed control switches internal steering wheel circuit, short to ground. • Cassette reel short to ground. • Cassette reel to ECM circuit short to ground • CANCEL switch failure. (Stuck on).	GO to Pinpoint Test C.
P0567	Speed control RESUME switch fault.	• Speed control switches internal steering wheel circuit, short to ground. • Cassette reel short to ground. • Cassette reel to ECM circuit short to ground. • RESUME switch failure. (Stuck on)	GO to Pinpoint Test D.
P0569	Speed control SET/- switch fault.	• Speed control switches internal steering wheel circuit, short to ground. • Cassette reel short to ground. • Cassette reel to ECM circuit short to ground. • SET/- switch failure.	GO to Pinpoint Test E.
P0570	Speed control SET/+ switch fault.	• Speed control switches internal steering wheel circuit, short to ground. • Cassette reel short to ground. • Cassette reel to ECM circuit short to ground. • SET/+ switch failure.	GO to Pinpoint Test F.
P0831	Clutch cancel switch, low voltage. (Switch normally closed).	• Switch supply open circuit. • Switch to ECM circuit open circuit or high resistance. • Switch failure.	GO to Pinpoint Test G.
P0832	Clutch cancel switch, high voltage. (Switch normally closed).	• Switch short circuit to battery. • Switch failure.	GO to Pinpoint Test G.
P0834	Clutch pedal safety switch, low voltage. (Switch normally open).	• Clutch pedal safety switch supply circuit open circuit. • Clutch pedal safety switch to ECM circuit open circuit/high resistance. • Switch failure.	GO to Pinpoint Test H.
P0835	Clutch pedal safety switch, high voltage. (Switch normally open).	• Clutch pedal safety switch to ECM circuit short circuit to battery. • Switch failure.	GO to Pinpoint Test H.
P1571	Brake ON/OFF switch, brake cancel switch malfunction.	• Brake ON/OFF switch to ECM circuit open circuit, short circuit to ground, high resistance. • Brake ON/OFF switch power supply circuit open circuit. • Brake ON/OFF switch failure. • Brake cancel switch to ECM circuit open circuit, short circuit	GO to Pinpoint Test I.

DTC	Description	Possible Source	Action
		to ground, high resistance. • Brake cancel switch power supply circuit open circuit. • Brake cancel switch failure.	

Pinpoint Tests

PINPOINT TEST A : P0568. CHECK SPEED CONTROL INPUT WIRE FOR OPEN CIRCUIT/HIGH RESISTANCE	
TEST CONDITIONS	**DETAILS/RESULTS/ACTIONS**
A1: CHECK INTERNAL STEERING WHEEL CIRCUIT FOR OPEN CIRCUIT/HIGH RESISTANCE (INPUT)	
	1 Disconnect steering wheel internal connector, SW5.
	2 Disconnect steering wheel connector, SW4.
	3 Measure the resistance between SW5, pin 4 (YR) and SW4, pin 1 (YR).
	Is the resistance less than 5 ohms? **Yes** GO to A3. **No** INSTALL a new steering wheel assembly. REFER to Section 211-04 Steering Column. CLEAR the DTC. TEST the system for normal operation.
A2: CHECK INTERNAL STEERING WHEEL CIRCUIT FOR OPEN CIRCUIT/HIGH RESISTANCE (SIGNAL)	
	1 Measure the resistance between SW5, pin 2 (B) and SW4, pin 3.
	Is the resistance less than 5 ohms? **Yes** GO to A3. **No** INSTALL a new steering wheel assembly. REFER to Section 211-04 Steering Column. CLEAR the DTC. TEST the system for normal operation.
A3: CHECK STEERING WHEEL CASSETTE FOR OPEN CIRCUIT/HIGH RESISTANCE (INPUT)	
	1 Disconnect steering wheel Cassette connector, IP34.
	2 Reconnect steering wheel internal connector, SW5.
	3 Measure the resistance between SW5, pin 4 (YR) and IP34, pin 8 (YR).
	Is the resistance less than 5 ohms? **Yes** GO to A4. **No** INSTALL a new steering wheel Cassette assembly. REFER to Section 211-04 Steering Column. CLEAR the DTC. TEST the system for normal operation.
A4: CHECK STEERING WHEEL CASSETTE FOR OPEN CIRCUIT/HIGH RESISTANCE (SIGNAL)	
	1 Disconnect steering wheel cassette connector, IP34.
	2 Measure the resistance between SW5, pin 2 (B) and IP34, pin 6 (YG).
	Is the resistance less than 5 ohms? **Yes** GO to A5. **No** INSTALL a new steering wheel cassette assembly. REFER to Section 211-04 Steering Column. CLEAR the DTC. TEST the system for normal operation.
A5: CHECK INPUT LEAD FROM ECM TO STEERING WHEEL CASSETTE FOR OPEN CIRCUIT/HIGH RESISTANCE	
	1 Disconnect ECM electrical connector, EN16.
	2 Measure the resistance between IP34, pin 8 (YR) and EN16, pin 47 (YR).
	Is the resistance less than 5 ohms? **Yes** GO to A6. **No** Repair the circuit between EN16, pin 47 and IP34, pin 8. For additional information, refer to wiring diagrams. CLEAR the DTC. TEST the system for normal operation.
A6: CHECK SIGNAL LEAD FROM ECM TO STEERING WHEEL CASSETTE FOR OPEN CIRCUIT/HIGH RESISTANCE	
	1 Measure the resistance between IP34, pin 6 (YG) and EN16, pin 48 (YG).
	Is the resistance less than 5 ohms? **Yes** GO to B1. **No** Repair the circuit between EN16, pin 48 and IP34, pin 6. For additional information, refer to wiring diagrams. CLEAR the DTC. TEST the system for normal operation.

PINPOINT TEST B : P0565. SPEED CONTROL ON/OFF SWITCH MALFUNCTION	
TEST CONDITIONS	**DETAILS/RESULTS/ACTIONS**
B1: CHECK SWITCH FUNCTION OF ON/OFF SWITCH	
	1 Connect an Ohmmeter between pins 1 and 3 of the Speed Control switchpack.
	2 Set the switch to the ON position.
	Does the resistance vary by 2200 ohms? **Yes** GO to B2. **No** INSTALL a new switchpack. REFER to Speed Control Switch in this section. CLEAR the DTC. TEST the system for normal operation.
B2: CHECK SWITCH FUNCTION OF ON/OFF SWITCH	
	1 Set the switch to the OFF position.

	Is the resistance 0 ohms? **Yes** No electrical fault in switchpack. RECHECK DTCs. **No** INSTALL a new switchpack. REFER to Speed Control Switch in this section. CLEAR the DTC. TEST the system for normal operation.

PINPOINT TEST C : P0566. SPEED CONTROL CANCEL SWITCH MALFUNCTION	
TEST CONDITIONS	**DETAILS/RESULTS/ACTIONS**
C1: CHECK SWITCH FUNCTION OF CANCEL SWITCH	
	1 Connect an Ohmmeter between pins 1 and 3 of the Speed Control switchpack.
	2 Operate the Cancel switch.
	Does the resistance vary by 4200 ohms? **Yes** No electrical fault in switchpack. RECHECK DTCs. **No** INSTALL a new switchpack. REFER to Speed Control Switch in this section. CLEAR the DTC. TEST the system for normal operation.

PINPOINT TEST D : P0567. SPEED CONTROL RESUME SWITCH MALFUNCTION	
TEST CONDITIONS	**DETAILS/RESULTS/ACTIONS**
D1: CHECK SWITCH FUNCTION OF RESUME SWITCH	
	1 Connect an Ohmmeter between pins 1 and 3 of the Speed Control switchpack.
	2 Operate the Resume switch.
	Does the resistance vary by 3200 ohms? **Yes** No electrical fault in switchpack. RECHECK DTCs. **No** INSTALL a new switchpack. REFER to Speed Control Switch in this section. CLEAR the DTC. TEST the system for normal operation.

PINPOINT TEST E : P0569. SPEED CONTROL SET/- SWITCH MALFUNCTION	
TEST CONDITIONS	**DETAILS/RESULTS/ACTIONS**
E1: CHECK SWITCH FUNCTION OF SET/- SWITCH	
	1 Connect an Ohmmeter between pins 1 and 3 of the Speed Control switchpack.
	2 Operate the Set /- switch.
	Does the resistance vary by 4000 ohms? **Yes** No electrical fault in switchpack. RECHECK DTCs. **No** INSTALL a new switchpack. REFER to Speed Control Switch in this section. CLEAR the DTC. TEST the system for normal operation.

PINPOINT TEST F : P0570. SPEED CONTROL SET/+ SWITCH MALFUNCTION	
TEST CONDITIONS	**DETAILS/RESULTS/ACTIONS**
F1: CHECK SWITCH FUNCTION OF SET/+ SWITCH	
	1 Connect an Ohmmeter between pins 1 and 3 of the Speed Control switchpack.
	2 Operate the Set /+ switch.
	Does the resistance vary by 3700 ohms? **Yes** No electrical fault in switchpack. RECHECK DTCs. **No** INSTALL a new switchpack. REFER to Speed Control Switch in this section. CLEAR the DTC. TEST the system for normal operation.

PINPOINT TEST G : P0831, P0832. CLUTCH CANCEL SWITCH, HIGH/LOW VOLTAGE	
TEST CONDITIONS	**DETAILS/RESULTS/ACTIONS**
G1: CHECK THE POWER SUPPLY CIRCUIT TO THE CLUTCH CANCEL SWITCH	
	1 Disconnect the clutch cancel switch electrical connector, PA4.
	2 Turn the ignition switch to the ON position.
	3 Measure the voltage between PA4, pin 1 (RW) and GROUND.
	Is the voltage greater than 10 volts? **Yes** GO to G2. **No** REPAIR the circuit between the clutch cancel switch electrical connector, PA4, pin 1 (RW) and the ignition switch. For additional information, refer to wiring diagrams. CLEAR the DTC. TEST the system for normal operation. (This circuit includes the ignition relay and the inertia switch)
G2: CHECK THE POWER SUPPLY CIRCUIT TO THE CLUTCH CANCEL SWITCH FOR SHORT CIRCUIT TO BATTERY	
	1 Disconnect the clutch cancel switch electrical connector, PA4.
	2 Turn the ignition switch to the OFF position.
	3 Measure the voltage between PA4, pin 1 (RW) and GROUND.
	Is the voltage greater than 1 volt? **Yes** Repair the short circuit. For additional information, refer to wiring diagrams. CLEAR the DTC. TEST the system for normal operation. **No** GO to G3.
G3: CHECK THE SWITCH ACTION OF THE CLUTCH CANCEL SWITCH	

	1 Connect an ohmmeter between pins 1 and 3 of the clutch cancel switch.
	2 Operate the clutch pedal up and down, while observing the resistance reading.
	Does the resistance switch between open and closed circuit as the pedal is operated? **Yes** GO to G4. **No** INSTALL a new clutch cancel switch. CLEAR the DTC. TEST the system for normal operation.
G4: CHECK THE SWITCH ACTION OF THE CLUTCH CANCEL SWITCH	
	1 Disconnect the ECM electrical connector, EN16.
	2 Reconnect the clutch cancel switch electrical connector, PA4.
	3 Connect a voltmeter between ECM electrical connector EN16, pin 33 (WG) and GROUND.
	4 Turn the ignition switch to the ON position.
	5 Operate the clutch pedal up and down, while observing the voltage reading.
	Does the voltage switch between 0 volts and battery voltage as the pedal is operated? **Yes** INSTALL a new ECM. REFER to Section 303-14A Electronic Engine Controls / 303-14B Electronic Engine Controls. Before replacing a ECM, contact Dealer technical support. CLEAR the DTC. TEST the system for normal operation. **No** GO to G5.
G5: CHECK THE CLUTCH CANCEL SWITCH SIGNAL WIRE FOR CONTINUITY	
	1 Turn the ignition switch to the OFF position.
	2 Disconnect clutch cancel switch electrical connector, PA4.
	3 Measure the resistance between clutch cancel switch electrical connector PA4, pin 3 (W) and ECM electrical connector EN16, pin 33 (WG).
	Is the resistance less than 5 ohms? **Yes** No electrical fault in circuit. RECHECK DTCs. **No** REPAIR the circuit between clutch cancel switch electrical connector PA4, pin 3 (W) and ECM electrical connector EN16, pin 33 (WG). For additional information, refer to wiring diagrams. CLEAR the DTC. TEST the system for normal operation.

PINPOINT TEST H : P0834, P0835. CLUTCH PEDAL SAFETY SWITCH, HIGH/LOW VOLTAGE	
TEST CONDITIONS	**DETAILS/RESULTS/ACTIONS**
H1: CHECK THE POWER SUPPLY CIRCUIT TO THE CLUTCH PEDAL SAFETY SWITCH	
	1 Disconnect the clutch pedal safety switch electrical connector, PA5.
	2 Turn the ignition switch to the ON position.
	3 Measure the voltage between PA5, pin 1 (RW) and GROUND.
	Is the voltage greater than 10 volts? **Yes** GO to H3. **No** REPAIR the circuit between the clutch pedal safety switch electrical connector, PA5, pin 1 (RW) and the ignition switch. For additional information, refer to wiring diagrams. CLEAR the DTC. TEST the system for normal operation.
H2: CHECK THE POWER SUPPLY CIRCUIT TO THE CLUTCH PEDAL SAFETY SWITCH FOR SHORT CIRCUIT TO BATTERY	
	1 Disconnect the clutch pedal safety switch electrical connector, PA5.
	2 Turn the ignition switch to the OFF position.
	3 Measure the voltage between PA5, pin 1 (RW) and GROUND.
	Is the voltage greater than 1 volt? **Yes** REPAIR the short circuit. For additional information, refer to wiring diagrams. CLEAR the DTC. TEST the system for normal operation. **No** GO to H3.
H3: CHECK THE SWITCH ACTION OF THE CLUTCH PEDAL SAFETY SWITCH	
	1 Connect an ohmmeter between pins 1 and 2 of the clutch pedal safety switch.
	2 Operate the clutch pedal up and down, while observing the resistance reading.
	Does the resistance switch between open and closed circuit as the pedal is operated? **Yes** GO to H4. **No** INSTALL a new clutch pedal safety switch. CLEAR the DTC. TEST the system for normal operation.
H4: CHECK THE SWITCH ACTION OF THE CLUTCH PEDAL SAFETY SWITCH	
	1 Disconnect the ECM electrical connector, EN16.
	2 Reconnect the clutch pedal safety switch electrical connector, PA5.
	3 Connect a voltmeter between ECM electrical connector EN16, pin 31 (B) and GROUND.
	4 Turn the ignition switch to the ON position.
	5 Operate the clutch pedal up and down, while observing the voltage reading.
	Does the voltage switch between 0 volts and battery voltage as the pedal is operated? **Yes** INSTALL a new ECM. REFER to Section 303-14A Electronic Engine Controls / 303-14B Electronic Engine Controls. Before replacing a ECM, contact Dealer technical support. CLEAR the DTC. TEST the system for normal operation. **No** GO to H5.
H5: CHECK THE CLUTCH PEDAL SAFETY SWITCH SIGNAL WIRE FOR CONTINUITY	
	1 Turn the ignition switch to the OFF position.
	2 Disconnect the clutch pedal safety switch electrical connector, PA5.
	3 Measure the resistance between clutch pedal safety switch electrical connector PA5, pin 2 (W) and ECM electrical connector EN16, pin 31 (B).
	Is the resistance less than 5 ohms? **Yes** No electrical fault in circuit. RECHECK DTCs. **No** REPAIR the circuit between clutch pedal safety switch electrical connector PA5, pin 2 (W) and ECM electrical connector

	EN16, pin 31 (B). For additional information, refer to wiring diagrams. CLEAR the DTC. TEST the system for normal operation.

PINPOINT TEST I : P1571. BRAKE ON/OFF SWITCH / BRAKE CANCEL SWITCH MALFUNCTION	
TEST CONDITIONS	**DETAILS/RESULTS/ACTIONS**
I1: CHECK THE POWER SUPPLY CIRCUIT TO THE BRAKE ON/OFF SWITCH	
	1 Disconnect the brake ON/OFF switch electrical connector, PA3.
	2 Turn the ignition switch to the ON position.
	3 Measure the voltage between PA3, pin 3 (NR) and GROUND.
	Is the voltage greater than 10 volts? **Yes** GO to I2. **No** REPAIR the circuit between the brake ON/OFF switch electrical connector, PA3, pin 3 (NR) and the ignition switch. For additional information, refer to wiring diagrams. CLEAR the DTC. TEST the system for normal operation. (This circuit icludes the inertia switch, ignition relay, and the central junction fuse box)
I2: CHECK THE POWER SUPPLY CIRCUIT TO THE BRAKE ON/OFF SWITCH FOR SHORT CIRCUIT TO BATTERY	
	1 Turn the ignition switch to the OFF position.
	2 Measure the voltage between PA3, pin 3 (NR) and GROUND.
	Is the voltage greater than 1 volt? **Yes** Repair the short circuit. For additional information, refer to wiring diagrams. CLEAR the DTC. TEST the system for normal operation. **No** GO to I3.
I3: CHECK THE BRAKE ON/OFF SWITCH SIGNAL WIRE FOR CONTINUITY	
	1 Disconnect the ECM electrical connector, EN16.
	2 Measure the resistance between the ECM electrical connector, EN16, pin 8 (GO) and brake ON/OFF switch electrical connector PA3, pin 1 (GW).
	Is the resistance less than 5 ohms? **Yes** GO to I4. **No** REPAIR the circuit between the ECM electrical connector, EN16, pin 8 (GO) and brake ON/OFF switch electrical connector PA3, pin 1 (GW). For additional information, refer to wiring diagrams. CLEAR the DTC. TEST the system for normal operation.
I4: CHECK THE SWITCH ACTION OF THE BRAKE ON/OFF SWITCH	
	1 Measure the resistance between pins 1 and 3 of the brake ON/OFF switch, with the brake pedal at rest.
	Is the switch open circuit? **Yes** GO to I5. **No** INSTALL a new brake ON/OFF Switch. CLEAR the DTC. TEST the system for normal operation.
I5: CHECK THE SWITCH ACTION OF THE BRAKE ON/OFF SWITCH	
	1 Measure the resistance between pins 1 and 3 of the brake ON/OFF switch, with the brake pedal depressed.
	Is the resistance less than 5 ohms? **Yes** INSTALL a new ECM. REFER to Section 303-14A Electronic Engine Controls / 303-14B Electronic Engine Controls. Before replacing a ECM, contact Dealer technical support. CLEAR the DTC. TEST the system for normal operation. **No** INSTALL a new brake ON/OFF switch. CLEAR the DTC. TEST the system for normal operation.
I6: CHECK THE POWER SUPPLY CIRCUIT TO THE BRAKE CANCEL SWITCH	
	1 Disconnect the brake cancel switch electrical connector, PA2.
	2 Turn the ignition switch to the ON position.
	3 Measure the voltage between PA2, pin 2 (NR) and GROUND.
	Is the voltage greater than 10 volts? **Yes** GO to I7. **No** REPAIR the circuit between the brake cancel switch electrical connector, PA2, pin 2 (NR) and the Ignition Switch. For additional information, refer to wiring diagrams. CLEAR the DTC. TEST the system for normal operation. (This circuit includes the inertia switch, ignition relay, and the central junction fuse box)
I7: CHECK THE POWER SUPPLY CIRCUIT TO THE BRAKE CANCEL SWITCH FOR SHORT CIRCUIT TO BATTERY	
	1 Disconnect the brake cancel switch electrical connector, PA2.
	2 Turn the ignition switch to the OFF position.
	3 Measure the voltage between PA2, pin 2 (NR) and GROUND.
	Is the voltage greater than 1 volt? **Yes** Repair the short circuit. For additional information, refer to wiring diagrams. CLEAR the DTC. TEST the system for normal operation. **No** GO to I8.
I8: CHECK THE BRAKE CANCEL SWITCH SIGNAL WIRE FOR CONTINUITY	
	1 Disconnect the ECM electrical connector, EN16.
	2 Measure the resistance between the ECM electrical connector, EN16, pin 9 (U) and brake cancel switch electrical connector PA2, pin 1 (U).
	Is the resistance less than 5 ohms? **Yes** GO to I9. **No** REPAIR the circuit between the ECM electrical connector, EN16, pin 9 (U) and brake cancel switch electrical connector PA2, pin 1 (U). For additional information, refer to wiring diagrams. CLEAR the DTC. TEST the system for normal operation.
I9: CHECK THE SWITCH ACTION OF THE BRAKE CANCEL SWITCH	
	1 Measure the resistance between pins 1 and 2 of the brake cancel switch, with the brake pedal at rest.

	Is the switch open circuit? **Yes** GO to I10. **No** INSTALL a new brake cancel switch. CLEAR the DTC. TEST the system for normal operation.
I10: CHECK THE SWITCH ACTION OF THE BRAKE CANCEL SWITCH	
	1 Measure the resistance between pins 1 and 2 of the brake cancel switch, with the brake pedal depressed.
	Is the resistance less than 5 ohms? **Yes** INSTALL a new ECM. REFER to Section 303-14A Electronic Engine Controls / 303-14B Electronic Engine Controls. Before replacing a ECM, contact Dealer technical support. CLEAR the DTC. TEST the system for normal operation. **No** INSTALL a new brake cancel switch. CLEAR the DTC. TEST the system for normal operation.

Speed Control - Speed Control Deactivator Switch

Removal and Installation

Removal

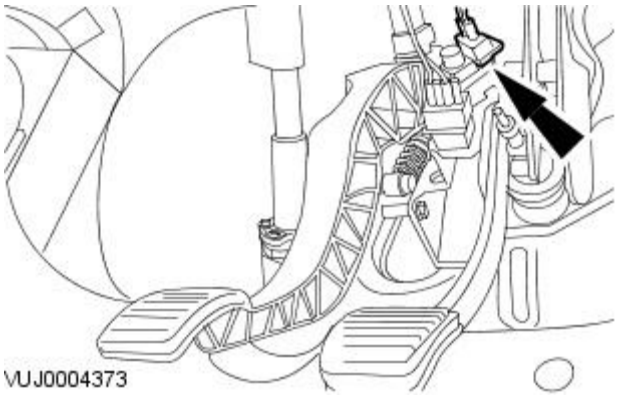

1. Disconnect the speed control deactivator switch electrical connector.

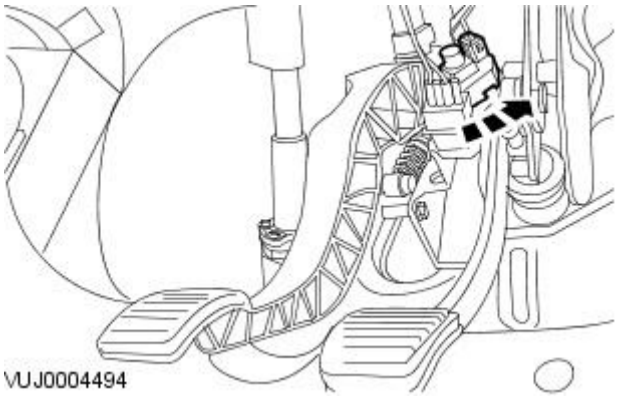

2. Remove the speed control deactivator switch.

- Turn the speed control deactivator switch 45 degrees counter clockwise.

Installation

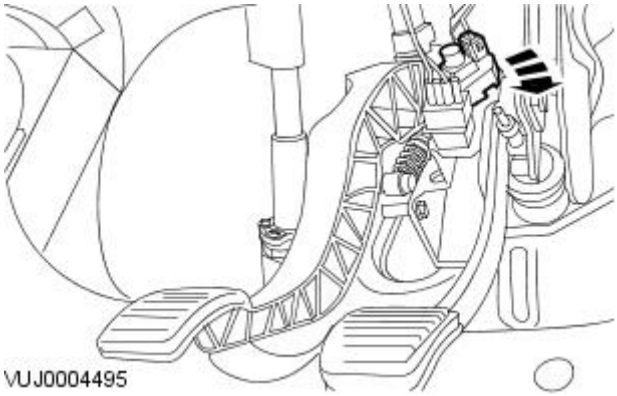

1. NOTE: Operate the brake pedal to allow the speed control deactivator switch plunger to remain in the fully extended position during installation.

• NOTE: Releasing and then pulling back on the brake pedal until the pedal reaches the stop in the brake booster, will adjust the speed control de-activator switch plunger to the required setting.

Install the speed control deactivator switch.

- Turn the speed control deactivator switch 45 degrees clockwise.

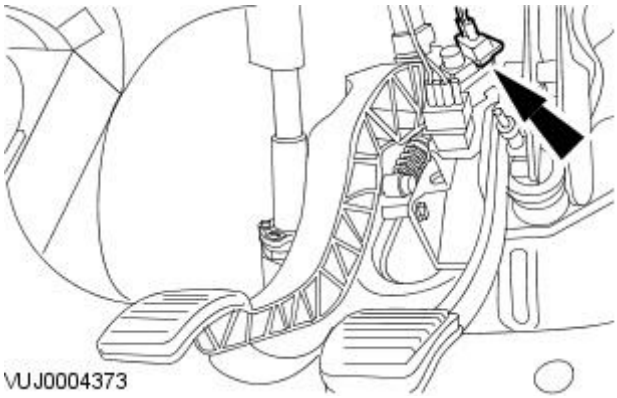

2. Connect the speed control deactivator switch electrical connector.

Speed Control - Speed Control Module

Removal and Installation

Removal

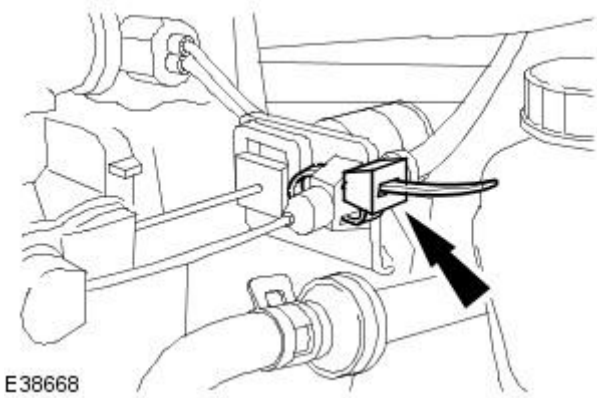

1. Remove the speed control module cable retaining tie strap.

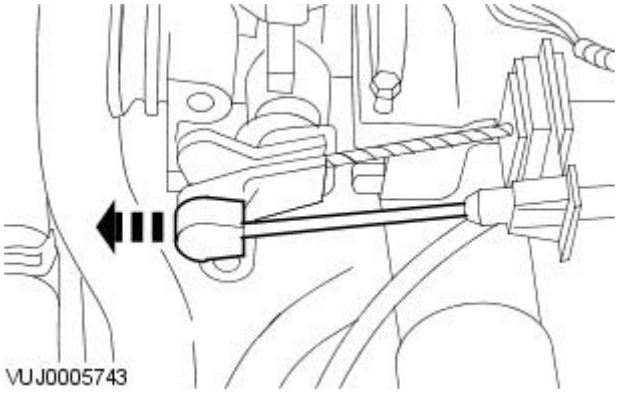

2. Detach the inner cable.

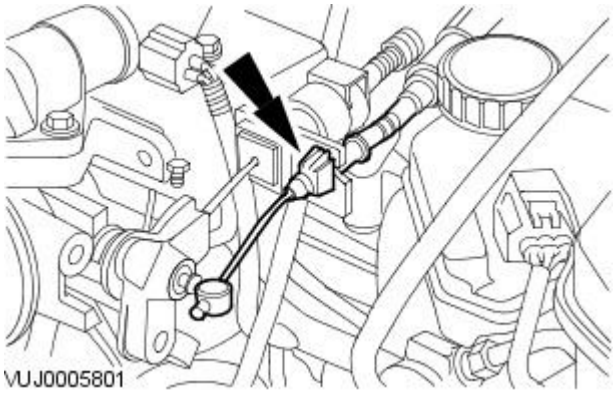

3. Detach the outer cable.

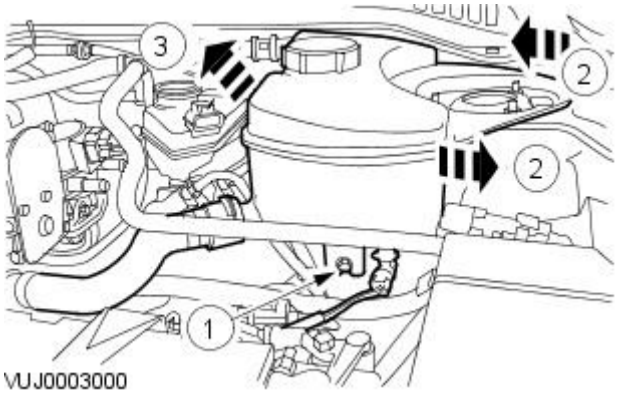

4. Detach the coolant expansion tank.

1. Remove the coolant expansion tank retaining bolt.
2. Turn the coolant expansion tank counter clockwise.
3. Detach the coolant expansion tank.

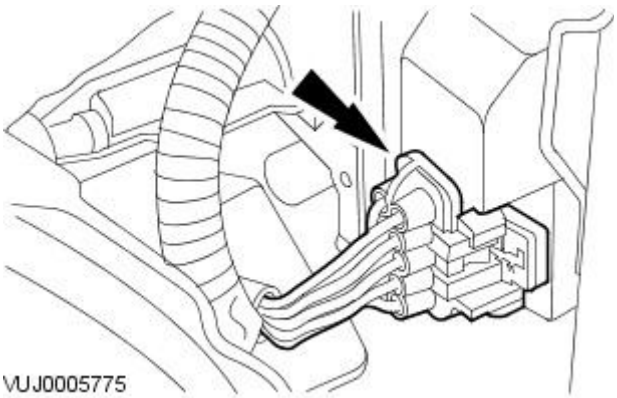

5. Disconnect the electrical connector.

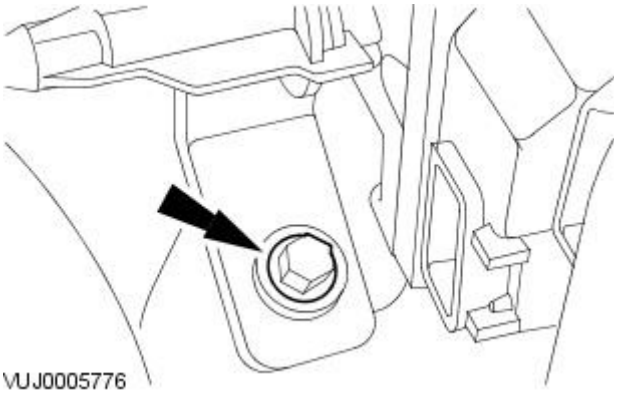

6. Remove the module retaining bolt.

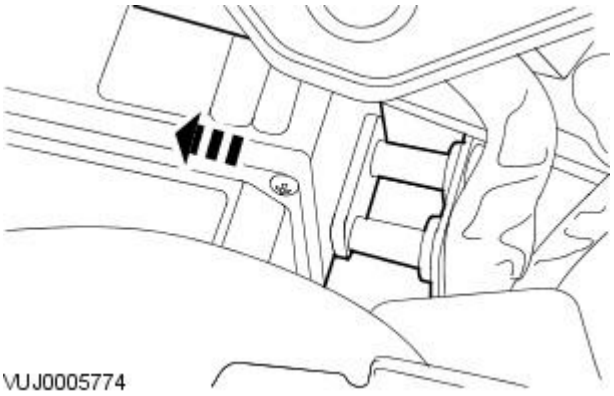

7. Remove the module.

Installation

1. To install, reverse the removal procedure.

2. Tighten to 4 Nm.

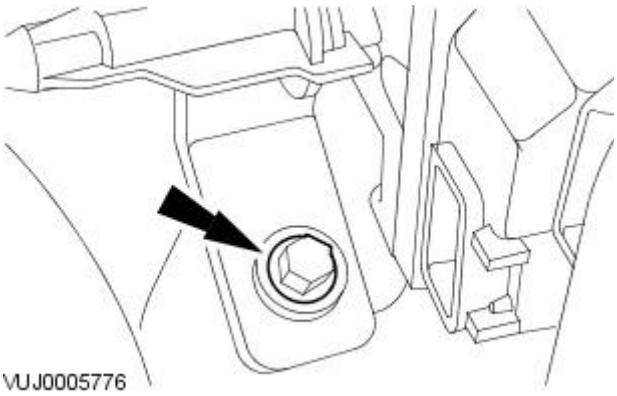

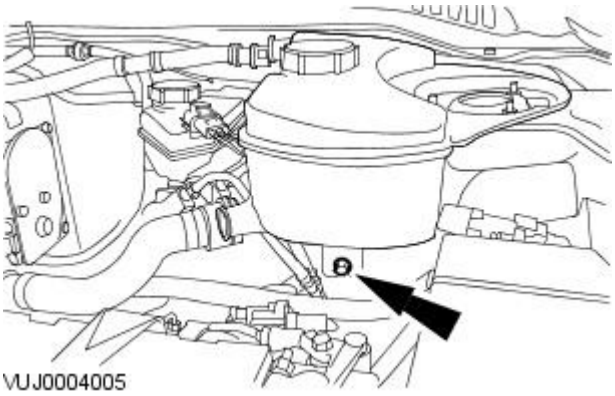

3. Tighten to 3 Nm.

Speed Control - Speed Control Switch

Removal and Installation

Removal

1. Remove the steering wheel.
   For additional information, refer to: Steering Wheel (211-04 Steering Column, Removal and Installation).
2. Remove the steering wheel finisher trim panel.

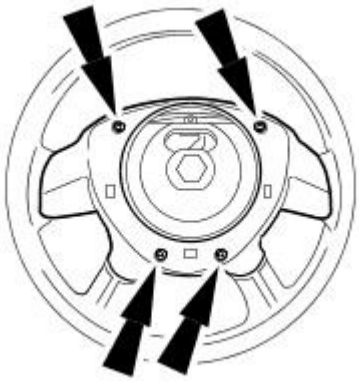

E49217

3. Disconnect the speed control switch electrical connector.

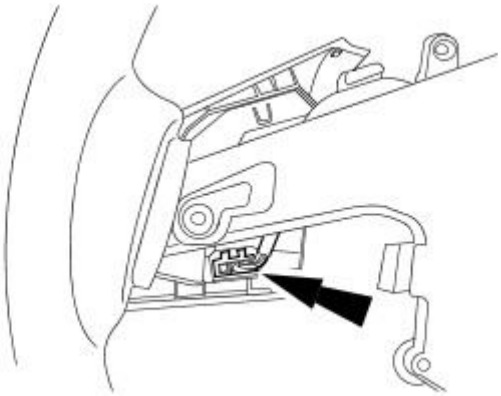

E49218

4. Remove the speed control switch.

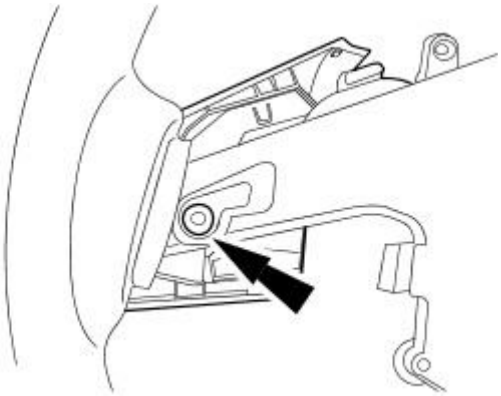

E49219

Installation

1. To install, reverse the removal procedure.
   - Tighten to 4 Nm.

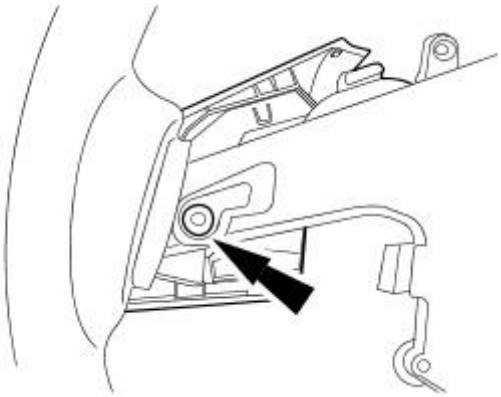

E49219

Climate Control System - General Information -

General Specifications

Item	Specification
Refrigerant	HFC 134a
Compressor oil	Polyalkyleneglycol
System oil quantity	Total system oil quantity = 160ml. New compressor supplied with 90ml, plus additonal 70ml of oil added online = 160ml

Refridgerant oil adding capacities for replacment parts.

• NOTE: Rotate the A/C compressor shaft at least 6 to 8 turns when draining the refrigerant oil.

Item	Specification
Air conditioning compressor	1. Drain old Air conditioning (A/C) compressor. With drain plug removed and ports uncapped, rotate shaft to remove A/C compressor oil and measure the amount of oil captured. 2. Drain new A/C compressor into a clean vessel. With drain plug removed and ports uncapped, rotate shaft to remove oil. Then add back a quantity of the new oil that is identical to the quantity of oil removed from the old A/C compressor. However, if this quantity is less than 30ml, then make it up to 30ml.
Air conditioning condenser	Add30 ml.
Accumulator/dehydrator	Transfer the oil from the accumulator/dehydrator being removed to a measuring cylinder. Fill the new accumulator with the same quantity of fresh oil plus 90 ml.
Air conditioning lines, if air conditioning has been operational.	Add 10 ml per AC line.

Climate Control System - General Information - Climate Control System

Description and Operation

The purpose of the air distribution system is to route air to the designated registers. This is accomplished when air enters the plenum through the fresh/recirculated air inlet and is routed to the desired outlets by the use of air distribution doors.

The air distribution system contains the heater core, A/C evaporator core, blower motor, and all of the distribution doors. All of the air is mixed and distributed inside of the plenum assembly, depending on the distribution door positions.

For additional information on the air distribution and filtering system, refer to Section 412-01 Air Distribution and Filtering.

Heating/Defrosting

The heater system is a blended air system, receiving outside air through the air inlet, which is connected to the upper cowl. Air is directed through and/or around the heater core and mixed and discharged through outlets in the plenum assembly to the floor, panel or defrost nozzles, as desired.

For additional information on heating and defrosting, refer toSection 412-02A Heating and VentilationSection 412-02B Auxiliary Heating.

Heater Core

The heater core consists of a number of fins and tubes in an arrangement to extract heat from the engine coolant and transfer that heat to the air that passes through the heater core.

Blower motor

The blower motor pulls air from the air inlet and forces it into the plenum assembly where it is mixed and distributed. The blower motor is controlled electronically by the NAV/EATC controller.

Air Conditioning

The R-134a air conditioning system uses a hydrofluorocarbon (HFC) non-CFC based refrigerant, R-134a requires the use of Jaguar refrigerant oil or equivalent meeting Jaguar specification. Do not use R-12 tools and equipment when repairing a R-134a system unless specified in the workshop manual. Never mix R-12 and R-134a refrigerants and oils. They are not compatible.

A/C System

The A/C system is a multi-piece, single case design, with an integral blower. The system allows the operator to control the temperature by delivering heated or cooled air to maintain a constant temperature. In addition, during A/C operation, it reduces the relative humidity of air inside the vehicle. Controls are provided to adjust the temperature and system functions, included blower motor speeds for desired airflow. Outside air is drawn from the cowl air inlet just below the windshield during all system operations except for MAX A/C cooling (when recirculated air is used) and OFF. For additional information on the air conditioning, refer toSection 412-03 Air Conditioning.

Control System Inputs

The climate control system inputs are selected from the climate control head.

Control System Outputs

The air distribution and air temperature blend doors are all controlled by electronic stepper motors. For additional information, refer toSection 412-04 Control Components.

Climate Control System - General Information - Climate Control System

Diagnosis and Testing

Principle of Operation

REFER to: Climate Control System (412-00 Climate Control System - General Information, Description and Operation).

Inspection and Verification

CAUTION: Diagnosis by substitution from a donor vehicle is **NOT** acceptable. Substitution of control modules does not guarantee confirmation of a fault, and may also cause additional faults in the vehicle being tested and/or the donor vehicle.

1. **1.** Verify the customer concern.
2. **2.** Visually inspect for obvious signs of mechanical or electrical damage.

• NOTE: All Climate Control System tests should be run in an ambient temperature of at least 10°c (50°F)

Visual Inspection Chart

Mechanical	Electrical
• Refrigerant circuit (fill level, leakage, flow restriction) • Condenser air flow (obstructions) • Evaporator air flow (obstructions) • air distribution housing condensate drain hose (not trapped) • Pollen filter (restricted flow) • Drive belt damage • Heater control flaps • Air conditioning compressor • Air outlet ducts (obstructions)	• Battery condition (fully charged and correctly connected) • Fuse(s) • Electrical connector(s) • Wiring harness for damage or corrosion • Blower motor • Cooling fan motor

3. **3.** If an obvious cause for an observed or reported concern is found, correct the cause (if possible) before proceeding to the next step.
4. **4.** If the cause is not visually evident, verify the symptom and refer to the Jaguar Approved Diagnostic System.

DTC Index

CAUTION: When probing connectors to take measurements in the course of the pinpoint tests, use the adaptor kit, part number 3548-1358-00

• NOTE: If the refrigerant compressor or Climate Control ECU is suspect and the vehicle remains under manufacturer warranty, refer to the Warranty Policy and Procedures manual (section B1.2), or determine if any prior approval programme is in operation, prior to the installation of a new component.

• NOTE: When performing voltage or resistance tests, always use a digital multimeter (DMM) accurate to three decimal places and with a current calibration certificate. When testing resistance, always take the resistance of the DMM leads into account.

• NOTE: Check and rectify basic faults before beginning diagnostic routines involving pinpoint tests.

• NOTE: If DTCs are recorded and, after performing the pinpoint tests, a fault is not present, an intermittent concern may be the cause. Always check for loose connections and corroded terminals.

DTC	Description	Possible Cause	Action
B1200	Climate Control Pushbutton Circuit Failure	• This DTC is logged when a Climate Control bezel button is pressed continuously for more than 5 minutes when the ignition is on	Check for objects pressing against the control buttons. Check for contamination of the buttons which could cause them to stick. (E.g.: spilt food or drink) If there are no apparent external reasons for a button to stick - then suspect an internal fault and install a new combined Climate Control panel / electronic control unit as required. Clear the DTC and recheck operation of system to ensure the DTC does not reset after 5 minutes
B1239	Air Flow Blend Door Driver Circuit Failure	• NOTE: Fault is checked for whilst the motor is running. • Short circuit (to ground or power) on any of the motor control lines • Open circuit on any of the motor control lines • Short to ground on the motor supply wire	• NOTE: check that the blend door is not mechanically jammed by a foreign body inside the air distribution housing Refer to the electrical circuit diagrams and check the integrity of the wiring between the blend door actuator motor and the climate control ECU. Check the motor power feed line for short to ground. Check the four control lines for open/short circuits. If no wiring defects are found install a new actuator motor. Clear the DTC and recheck that the DTC does not reset by operating the system
B1242	Air Flow Recirculation Door Driver Circuit Failure	• NOTE: Fault is checked for when the motor is not running. • Open circuit or short circuit to ground or power on either drive line	• NOTE: check that the recirculation door is not mechanically jammed by a foreign body inside the air distribution housing Refer to the electrical circuit diagrams and check the integrity of the wiring between the recirculation door actuator motor and the climate control ECU. Check both control lines for open/short circuits. If no wiring defects are found install a new actuator motor. Clear the DTC and recheck that the DTC does not reset by operating the system
B1251	Air Temperature Internal Sensor Circuit Open	• In car temp sensor feed open circuit	Refer to the relevant circuit diagram and check the integrity of the wiring between the air temperature internal sensor and the Climate Control System ECU. Check for open circuits on the Incar Sensor Input and Sensor Ground lines between the sensor and the Climate Control ECU. If no wiring defects are found install a new Air Temperature Internal Sensor. Clear the DTC and operate the system to check that the DTC does not reset.

DTC	Description	Possible Cause	Action
B1253	Air Temperature Internal Sensor Circuit Short to Ground	• In car temp sensor feed short to ground	Refer to the relevant circuit diagram and check the integrity of the wiring between the air temperature internal sensor and the Climate Control System ECU. Check for short circuits to ground on the Incar Sensor Input line between the sensor and the Climate Control ECU. If no wiring defects are found install a new Air Temperature Internal Sensor. Clear the DTC and operate the system to check that the DTC does not reset.
B1255	Air Temperature External Sensor Circuit Open	• Ambient temp sensor feed open circuit	Refer to the relevant circuit diagram and check the integrity of the wiring between the air temperature external sensor and the Climate Control System ECU. Check for open circuits on the Ambient Sensor line and the Sensor Ground line between the sensor and the Climate Control ECU. If no wiring defects are found install a new Ambient Temperature External Sensor. Clear the DTC and operate the system to check that the DTC does not reset.
B1257	Air Temperature External Sensor Circuit Short To Ground	• Ambient sensor feed short to ground	Refer to the relevant circuit diagram and check the integrity of the wiring between the air temperature external sensor and the Climate Control System ECU. Check for shorts to ground on the Ambient Sensor line between the sensor and the Climate Control ECU. If no wiring defects are found install a new Ambient Temperature External Sensor. Clear the DTC and operate the system to check that the DTC does not reset.
B1261	Solar Radiation Sensor Circuit Short To Ground	• Sunload sensor short	This component is not fitted after 2005 model year. The circuit should be open in vehicles after 2005my
B1262	Servo Motor Defrost Circuit Failure	• NOTE: Fault is checked for whilst the motor is running • Short circuit (to ground or power) on any of the motor control lines • Open circuit on any of the motor control lines • Short to ground on the motor supply wire	• NOTE: check that the defrost door is not mechanically jammed by a foreign body inside the air distribution housing Refer to the relevant circuit diagram and check the integrity of the wiring between the Defrost Door Servo motor and the Climate Control System ECU. Check the Defrost Power line for a short to ground. Check each of the four control lines for open circuits, or shorts to power or ground. If no wiring defects are found install a new Defrost Door actuator motor. Clear the DTC and operate the system to check that the DTC does not reset.
B1263	Panel Door Circuit Failure	• NOTE: Fault is checked for whilst the motor is running • Short circuit (to ground or power) on any of the motor control lines • Open circuit on any of the motor control lines • Short to ground on the motor supply wire •	• NOTE: check that the panel door is not mechanically jammed by a foreign body inside the air distribution housing Refer to the relevant circuit diagram and check the integrity of the wiring between the Panel Door Servo motor and the Climate Control System ECU. Check the Panel/Floor Power line for a short to ground. Check each of the four control lines for open circuits, or shorts to power or ground. If no wiring defects are found install a new Panel/floor actuator motor. Clear the DTC and operate the system to check that the DTC does not reset.
B1342	ECU is Faulted	• DTC set when ECU fails EEPROM checksum test • DTC set when ECU fails EEPROM write test • DTC set when ECU fails EEPROM / ROM matching software revision check	Check the battery is fully charged and the supply leads are correctly connected. Refer to the relevant circuit diagram and check the integrity of the wiring between the Climate Control ECU and Power and ground distribution components. Check the power supply lines and fuses for open circuits and volt drops. Check the ground connections for open circuits and volt drops. Repair power supply and ground connections as required. Clear the DTC and operate the system to check if the DTC does reset. If the DTC is reset install a new Climate Control ECU.
B1676	Battery Pack Voltage Out Of Range	• battery voltage outside 9 - 16 volts range	Check the battery is fully charged and the supply leads are correctly connected. Refer to the relevant circuit diagram and check the integrity of the wiring between the Climate Control ECU and the Front Power Distribution Box and ground distribution components. Check the power supply lines and fuses for open circuits and volt drops. Check the ground connections for open circuits and volt drops. Repair power supply and ground connections as required.
B2672	Discharge Air Temperature Sensor Circuit Open	• Discharge Air Temperature Sensor Open Circuit	Refer to the relevant circuit diagram and check the integrity of the wiring between the discharge air temperature sensor and the Climate Control System ECU. Check for open circuits on the Discharge Sensor line and the sensor ground line between the sensor and the Climate Control ECU. If no wiring defects are found install a new Discharge Air Temperature Sensor. Clear the DTC and operate the system to check that the DTC does not reset.
B2673	Discharge Air Temperature Sensor Circuit Short to Ground	• Discharge Air Temperature Sensor Circuit Short to Ground	Refer to the relevant circuit diagram and check the integrity of the wiring between the discharge air temperature sensor and the Climate Control System ECU. Check for short circuits on the Discharge Sensor line between the sensor and the Climate Control ECU. If no wiring defects are found install a new Discharge Air Temperature Sensor. Clear the DTC and operate the system to check that the DTC does not reset.
B2308	Interior Air Temperature Inlet Motor Failure	• motor stalled • motor open or short circuit	Check the air inlet path is clear and no foreign objects are present in the air intake orifice. Check the integrity of the wiring between the Interior Air Temperature Sensor Aspirator Motor and the power distribution components. Refer to the appropriate wiring diagram and inspect fuses and relays to confirm power is present at the motor. Check the aspirator motor ground connection to the climate control ECU for open circuits. If no wiring faults are found replace the interior air temperature sensor. Clear the DTC and operate the system to check that the DTC does not reset.
B2516	Blower Motor Failure	• NOTE: This DTC is only relavent to the ATC version of the climate control system. • motor stalled • motor open or short circuit • Wiring harness fault	Validate the fault on the car. Check the blower motor is not stalled by a foreign object. Refer to the relevant circuit diagram and check the integrity of the wiring between the blower motor and the power distribution components. Check the fuses and relay which supply the motor. Check the motor supply lines between the Passenger Junction Box and motor for open or short circuits to ground. Check the motor ground lines to the ground point on the cross car beam for open circuits. Repair harness faults using approved repair kit. replace blower motor if there are no harness faults

DTC	Description	Possible Cause	Action
B1946	Climate Control A/C Post Evaporator Sensor Circuit Failure	• Evaporator temperature sensor feed open circuit	Refer to the relevant circuit diagram and check the integrity of the wiring between the Climate Control A/C Post Evaporator Sensor and the Climate Control System ECU. Check for open circuits on the Evap Sensor line between the sensor and the Climate Control ECU. Check the sensor ground line for open circuits. If no wiring defects are found install a new Climate Control A/C Post Evaporator Sensor. Clear the DTC and operate the system to check that the DTC does not reset.
B1947	Climate Control A/C Post Evaporator Sensor Circuit Short To Ground	• Evaporator sensor feed short to ground	Refer to the relevant circuit diagram and check the integrity of the wiring between the Climate Control A/C Post Evaporator Sensor and the Climate Control System ECU. Check for short circuits to ground on the Evap Sensor line between the sensor and the Climate Control ECU. If no wiring defects are found install a new Climate Control A/C Post Evaporator Sensor. Clear the DTC and operate the system to check that the DTC does not reset.
U1900	CAN Communication Bus Fault - Receive Error	• Communication on CAN network fault	Refer to the relevant wiring diagram and check the CAN bus wiring for open circuits, shorts to power or ground. Check termination resistance is correct. Repair harness as required using approved harness repair kit
B2477	Module Configuration Failure	• 'Configuration never programmed' or 'Configuration write failure'	Not used on X400 or set on delivered modules

Auxiliary Heaters

There are two types of auxilliary heater fitted to diesel powered vehicles according to it's intended market. An electric booster heater, which is a standard fitment, or a fuel fired booster heater which is fitted for specific extreme cold climate markets.

The electric booster heater uses 3 glowplugs mounted in a housing connected into the coolant circuit, the glowplugs are controlled automatically by the engine management system.

The fuel fired booster heater uses a separate combustion housing and heat exchanger to heat the coolant by burning diesel drawn from the vehicle fuel tank. The fuel fired booster heater is controlled automatically by an electronic control unit which also uses data from the engine management system.

Inspection and Verification

CAUTION: Diagnosis by substitution from a donor vehicle is **NOT** acceptable. Substitution of control modules does not guarantee confirmation of a fault, and may also cause additional faults in the vehicle being tested and/or the donor vehicle.

1. **1.** Verify the customer concern.
2. **2.** Visually inspect for obvious signs of mechanical or electrical damage.

Visual Inspection Chart

Mechanical	Electrical
• Air inlet ducting to fuel burning heater free of obstructions • Exhaust outlet from fuel burning heater free of obstructions • Fuel supply lines to fuel burning heater not damaged (leaks, blockages) • Coolant hoses correctly connected • Cooling system filled and bled correctly	• Battery condition (fully charged and correctly connected) • Fuse(s) and relay(s) • Electrical connector(s) • Wiring harness for damage or corrosion • auxilliary water pump functional

3. **3.** If an obvious cause for an observed or reported concern is found, correct the cause (if possible) before proceeding to the next step.
4. **4.** If the cause is not visually evident, verify the symptom and refer to the Jaguar Approved Diagnostic System.

DTC Index

CAUTION: When probing connectors to take measurements in the course of the pinpoint tests, use the adaptor kit, part number 3548-1358-00

• NOTE: If the Fuel Burning Heater is suspect and the vehicle remains under manufacturer warranty, refer to the Warranty Policy and Procedures manual (section B1.2), or determine if any prior approval programme is in operation, prior to the installation of a new component.

• NOTE: When performing voltage or resistance tests, always use a digital multimeter (DMM) accurate to three decimal places and with a current calibration certificate. When testing resistance, always take the resistance of the DMM leads into account.

• NOTE: Check and rectify basic faults before beginning diagnostic routines involving pinpoint tests.

• NOTE: If DTCs are recorded and, after performing the pinpoint tests, a fault is not present, an intermittent concern may be the cause. Always check for loose connections and corroded terminals.

DTC	Description	Possible Cause	Action
B2462	Aux. Heater Flame Out Fault	• Fuel supply lines to the auxilliary heater crushed, blocked, leaking • Internal fault within auxilliary heater unit	Check fuel supply lines to the auxilliary heater are free from damage, leaks or air ingress.Rectify any restrictions, leaks of air ingress. Clear DTC and test the system to verify the repair.
B1317	Battery voltage high	• Charging system fault	Check charging system REFER to: Charging System - 2.0L Duratorq-TDCi/2.2L Duratorq-TDCi (110kW/150PS) - Puma (414-00 Battery and Charging System - General Information, Diagnosis and Testing).

DTC	Description	Possible Cause	Action
B1318	Battery Voltage Low	• Battery discharged • Wiring harness fault • Charging system fault	Check battery is fully charged. Using the appropriate circuit diagrams: Check power supply circuits from front power distribution box to the fuel fired heater unit. Using the appropriate circuit diagrams: check ground connections to the fuel fired heater unit. Repair any wiring faults using the approved harness repair kit. Clear the DTC and test the system to verify the repair. Check charging system REFER to: Charging System - 2.0L Duratorq-TDCi/2.2L Duratorq-TDCi (110kW/150PS) - Puma (414-00 Battery and Charging System - General Information, Diagnosis and Testing).

Published: 11-May-2011

Climate Control System - General Information - Air Conditioning (A/C) Compressor Leak Detection

General Procedures

1. Remove the A/C compressor from the vehicle. For additional information, refer to Section 412-03 Air Conditioning.
2. Install A/C pressure test adaptor to the A/C compressor using the existing manifold bolt.
3. Connect the high and low pressure lines of R-134a manifold gauge set to the fittings on A/C pressure test adaptor.
4. Attach the center hose of R-134a manifold gauge set to a refrigerant container standing in an upright position.
5. Hand rotate the compressor shaft ten revolutions to distribute the oil inside the A/C compressor.
6. Open the low and high pressure gauge valves and the valve on the refrigerant container to allow the refrigerant vapor to flow into the A/C compressor.
7. Use R-134a automatic calibration halogen leak detector to check for leaks at the compressor shaft seal and the compressor center seal.
8. If a shaft seal leak is found, install a new shaft seal. If a leak is found at the compressor center seal, install a new A/C compressor.
9. When the leak test is finished, close the manifold gauge valves and the valve on the refrigerant container.
10. Slowly remove the gauge set hoses from A/C pressure test adapter. Allow the refrigerant in the compressor to escape.
11. Install the A/C compressor on the vehicles. For additional information, refer to Section 412-03 Air Conditioning
12. Evacuate, charge and leak test the system.

Climate Control System - General Information - Air Conditioning (A/C) System Flushing

General Procedures

1. WARNING: Use extreme care and observe all safety precautions related to the use of refrigerants. Warning: Due to refrigerant hazards, always wear safety goggles and non-penetrable gloves when working on or flushing A/C systems. Failure to follow this instruction may result to personal injury.

• CAUTIONS:

The A/C refrigerant analyzer must be used before the recovery of any vehicle's A/C refrigerant. Failure to do so puts shop bulk refrigerant at risk of contamination. If the vehicle A/C refrigerant is contaminated, refer the customer to return to the repair facility that performed the last A/C repair. If the customer wishes to pay the additional cost, use the A/C recovery equipment that is designated for recovering contaminated A/C refrigerant. All contaminated A/C refrigerant must be disposed of as hazardous waste. For all equipment, follow the equipment manufacturers procedures and instructions. Failure to follow this instruction may result to personal injury.

Suction accumulator/drier, muffler, hoses, thermal expansion valve, and fixed orifice tube should be removed when flushing the A/C system. Internal plumbing of these devices makes it impossible to correctly remove any residual flushing agent. Except for the hoses, these components are typically discarded after A/C system contamination. Hoses can normally be reused unless they are clogged with debris. The flushing solvent and filter used in the A/C Flusher are intended for use on one vehicle only. They may be used to flush both the A/C condenser core and the A/C evaporator core on an individual vehicle, but under no circumstances should they be used on more than one vehicle.

• NOTE: Prior to using A/C Flusher for the first time, review its operating instructions. Failure to follow this instruction may result to personal injury.

This procedure allows the specified components to be cleaned and flushed while installed in their normal in-vehicle location. The types of contamination flushed include particle matter that results from A/C compressor and/or desiccant failure within the suction accumulator/drier and gummy residue that may form when refrigerant oil is overheated during A/C compressor seizure. The flushing process is a two-step procedure that involves the use of an A/C Flusher to:

- Circulate the flushing solvent through the heat exchanger in the reverse direction of normal refrigerant flow (back-flushing). Particulate matter picked up during flushing is filtered from the returning solvent before the solvent is returned to the reservoir for continued circulation.
- Remove the flushing solvent from the heat exchanger. In this step of the procedure, pressurized air 621-862 kPa (90-125 psi) is used to push and/or evaporate any remaining flush solvent from the heat exchanger.

2. Reclaim the refrigerant. For additional information, refer to Discharging and Recovery.

3. Disconnect refrigerant lines from the heat exchanger(s) to be flushed. For additional information, refer to Section 412-03 Air Conditioning

4. Connect A/C flusher and A/C flusher fitting kit to the heat exchanger to be flushed. Do not flush through the A/C evaporator core orifice, mufflers or lines. Internal plumbing and material make-up of these components make it impossible to correctly remove debris and/or residual flushing solvent.

5. Use flushing solvent to flush the heat exchanger for a minimum of 15 minutes. The flush solvent may be used for one or both heat exchangers in the A/C system. However, the flush solvent is intended for one vehicle only. The filter used on the flushing unit is also intended for use on one vehicle only.

6. Flush component for a minimum of 15 minutes.

7. Apply 621-862 kPa (90-125 psi) pressurized air to the component for a minimum of 30 minutes. The 30 minute purge time is required to force and/or evaporate all residual flush solvent from the A/C system component. Failure to successfully remove all residual solvent within the component can result in system damage when reconnected and operated. Dispose of used flush solvent and filter in accordance with local, state and federal ordinances.

8. NOTE: A/C system filtering as described in this section is optional if system flushing is performed. However, filter kit use is recommended after flushing if A/C system contamination is extensive.

Install new suction accumulator/drier and A/C evaporator core orifice on any vehicle being repaired for A/C compressor or desiccant failure.

9. Install new refrigerant lines if clogged with debris.
10. Reconnect the heat exchanger being flushed.
11. Add additional refrigerant oil as required. For additional information, refer to Refrigerant Oil Adding.
12. Evacuate, charge and leak test A/C system.
13. Check A/C system for correct operation.

Climate Control System - General Information - Air Conditioning (A/C) System Recovery, Evacuation and Charging

General Procedures

1. WARNINGS:

A/C refrigerant can be extremely hazardous and failure to follow the equipment manufacturers instructions may result in personal injury.

Jaguar Cars Limited recommend the use of a charging station to carry out recover, evacuation and charging of the refrigerant system. Follow the manufactures equipment procedures and instructions. Failure to follow these instructions may result in personal injury.

• CAUTIONS:

The A/C refrigerant analyzer must be used before the recovery of any vehicle's A/C refrigerant. Failure to do so puts shop bulk refrigerant at risk of contamination. If the vehicle A/C refrigerant is contaminated, refer the customer to return to the repair facility that carried out the last A/C repair. If the customer wishes to pay the additional cost, use the A/C recovery equipment that is designated for recovering contaminated A/C refrigerant. All contaminated A/C refrigerant must be disposed of as hazardous waste. For all equipment, follow the equipment manufacturers procedures and instructions.

Do not add R-12 refrigerant to an A/C system that requires the use of R-134a refrigerant. These two types of refrigerant should never be mixed. Doing so may cause damage to the A/C system.

Connect the charging station. For additional information, refer to the manufactures equipment instructions.

2. Recover the refrigerant. For additional information, refer to the manufactures equipment instructions.

3. Carry out the required repair procedure.
For additional information, refer to Section 412-03 Air Conditioning.

4. Add the required amount of oil to the A/C system depending on the repair procedure.
For additional information, refer to Refrigerant Oil Adding - in this section.

5. Evacuate the A/C system. For additional information, refer to the manufactures equipment instructions.

6. Check the A/C system for a sufficient vacuum. For additional information, refer to the manufactures equipment instructions.

7. Charge the A/C system with refrigerant.

8. Check the A/C system for correct operation.

9. Carry out a leak detection test.
For additional information, refer to Leak Detection - in this section.

Published: 11-May-2011

Climate Control System - General Information - Contaminated Refrigerant Handling

General Procedures

1. If contaminated refrigerant is detected DO NOT recover the refrigerant into your R-134a OR R-12 recovery/recycling equipment. Take the follow actions:

1. Repeat the test to verify contaminated refrigerant is present.
2. Advise the customer of the contaminated A/C system and any additional cost to repair the system. The customer may wish to return to the repair facility performing the last A/C repair.
3. Recover the contaminated refrigerant using suitable recovery only equipment designed for capturing and storing contaminated refrigerant. This equipment must only be used to recover contaminated refrigerant to prevent the spread to other vehicles. As an alternative, contact an A/C repair facility in your area with the proper equipment to perform the repair.

Climate Control System - General Information - Discharging and Recovery

General Procedures

1. WARNING: Use extreme care and observe all safety precautions related to the use of refrigerants. Failure to follow this instruction may result in personal injury.

• CAUTIONS:

If a refrigerant recovery or recycling station is used, the following general procedures should be observed in addition to the operating instructions provided by the equipment manufacturers. Failure to follow this instruction may result in personal injury.

The A/C Refrigerant Analyzer must be used before the recovery of any vehicle's A/C refrigerant. Failure to do so puts shop bulk refrigerant at risk of contamination. If the vehicle A/C refrigerant is contaminated, refer the customer to return to the repair facility that performed the last A/C repair. If the customer wishes to pay the additional cost, use the A/C recovery equipment that is designated for recovering contaminated A/C refrigerant. All contaminated A/C refrigerant must be disposed of as hazardous waste. For all equipment, follow the equipment manufacturers procedures and instructions. Failure to follow this instruction may result in personal injury.

• NOTE: Hoses should have shut off devices or check valves within 305mm (12 in) of the hose end to minimize the introduction of non-condensable gases (air) into the recovery station, as well as to minimize the amount of refrigerant released when the hoses are disconnected.

• NOTE: Follow the equipment manufacturers procedures and instructions. Failure to follow this instruction may result in personal injury.

Connect R-134a A/C refrigerant center hose(s) to the vehicle gauge ports and R-134a A/C refrigerant center inlet fittings.

2. Turn on the power to R-134a A/C refrigerant center to start the recovery process. Allow R-134a A/C refrigerant center to recover refrigerant from the system until the station pressure goes into a vacuum. On some equipment, the pump will be shut off automatically by a low-pressure switch in the electrical system. On other units, it may be necessary to manually turn off the pump.

3. Once R-134a A/C refrigerant center has recovered the vehicle A/C system refrigerant, close R-134a A/C refrigerant center inlet valve (if equipped). Then switch off the power supply.

4. Allow the vehicle A/C system to remain closed for about two minutes. Observe the system vacuum level as shown on the gauge. If the pressure does not rise, disconnect R-134a A/C refrigerant center hose(s).

5. If the system pressure rises, repeat Steps 2-4 until the vacuum level remains stable for two minutes.

6. Carry out the required operations, then evacuate and recharge the A/C system. For additional information, refer to Evacuation and Charging.

Climate Control System - General Information - Electronic Leak Detection

General Procedures

1. WARNING: Good ventilation is necessary in the area where A/C leak testing is to be carried out. If the surrounding air is contaminated with refrigerant gas, the leak detector will indicate this gas all the time. Odors from other chemicals such as antifreeze, diesel fuel, disc brake cleaner, or other cleaning solvents can cause the same problem. A fan, even in a well ventilated area, is very helpful in removing small traces of contamination from the air that might affect the leak detector. Failure to follow this instruction may result in personal injury.

Attach R-134a manifold gauge set to the service gauge port valves.

- Leave both R-134a manifold gauge set valves closed.
- Both gauges should indicate 413-551 kPa (60-80 psi) at 24°C (75°F) with the engine off.
- If little or no pressure is indicated, charge the refrigerant system. For additional information, refer to Discharging and Recovery.

2. Use R134-a Automatic calibration halogen leak detector to leak test the refrigerant system. Follow the instructions included with leak detector for handling and operation techniques.

3. If a leak is found, reclaim the refrigerant. For additional information, refer to Discharging and Recovery.

Published: 11-May-2011

Climate Control System - General Information - Inspection and Assembly Requirements

General Procedures

1. NOTE: Any time a hose or component connection leak is observed, the component and fitting must be separated, cleaned and a new O-ring and connector should be lubricated.

O-ring seal surfaces must be free of dirt, lint, burrs and scratches. The O-ring and connector should be lubricated.

Published: 11-May-2011

Climate Control System - General Information - Leak Detection

General Procedures

1. NOTE: On vehicles with R-134a Leak Trace Dye incorporated into the A/C system. The exact location of leaks can be pinpointed by the bright yellow-green glow of the tracer dye. Since more than one leak may exist, always inspect each component. If it is necessary to add dye, use Dye Injector. A/C systems require 7.39 ml (0.25 oz.) of Fluoro-Light/P Fluorescent Tracer Dye 164-R3712.

• NOTE: Some vehicles may have signs of refrigerant oil at the spring lock couplers. This may be caused from the assembly process which applies to the fittings before installation to aid in assembly. When a spring lock coupler is suspected of leaking,always wipe the fitting clean and verify the leak with R-134a Automatic Calibration Halogen Leak Detector.

Check for leaks using 120 Watt UV Spot Lamp.

2. Scan all components, fittings and lines of the A/C system.

3. After the leak is repaired, remove any traces of leak dye with a general purpose oil solvent.

4. Verify the repair by operating the system for a short time and inspecting with the UV lamp.

Climate Control System - General Information - Refrigerant Oil Adding

General Procedures

1. A new replacement A/C compressor contains 150 ml (5 oz.) refrigerant oil. If the amount of oil drained from the removed A/C compressor is between 90 and 150 ml (3 to 5 oz.), pour the same amount plus 28 ml (1 oz.) of clean oil into the new A/C compressor. If the amount of oil drained from the old A/C compressor is greater than 150 ml (5 oz.), pour only 150 ml (5 oz.) of clean refrigerant oil into the new A/C compressor. If the amount of refrigerant oil drained from the old A/C compressor is less than 90 ml (3 oz.), pour 90 ml (3 oz.) of clean refrigerant oil into the new compressor.
   - When replacing components of the air conditioning refrigerant system, add oil to the replacement components.

Climate Control System - General Information - Refrigerant System Tests

General Procedures

1. WARNING: Use extreme care and observe all safety precautions related to the use of refrigerants. The A/C refrigerant analyzer must be used before the recovery of any vehicle's A/C refrigerant. Failure to do so puts shop bulk refrigerant at risk of contamination. If the vehicle A/C refrigerant is contaminated, refer the customer to return to the repair facility that carried out the last A/C repair. If the customer wishes to pay the additional cost, use the A/C recovery equipment that is designated for recovering contaminated A/C refrigerant. All contaminated A/C refrigerant must be disposed of as hazardous waste. For all equipment, follow the equipment manufacturers procedures and instructions. Failure to follow this instruction may result in personal injury.

• NOTE: Jaguar Cars Ltd supports the efficient usage, recovery and recycling of the refrigerant used in passenger car air conditioners. Jaguar Cars Ltd recommends the use of UL-approved recovery/recycling device such as R-134a A/C refrigerant center (which meets SAE Standard J 1991) during any A/C system repair and recharge procedure which requires that the system be evacuated.

Use R-134a A/C refrigerant centre to evacuate and recover the A/C system.

- Follow the equipment manufacture procedures and instructions for use of equipment.

Air Distribution and Filtering - Air Distribution and Filtering

Description and Operation

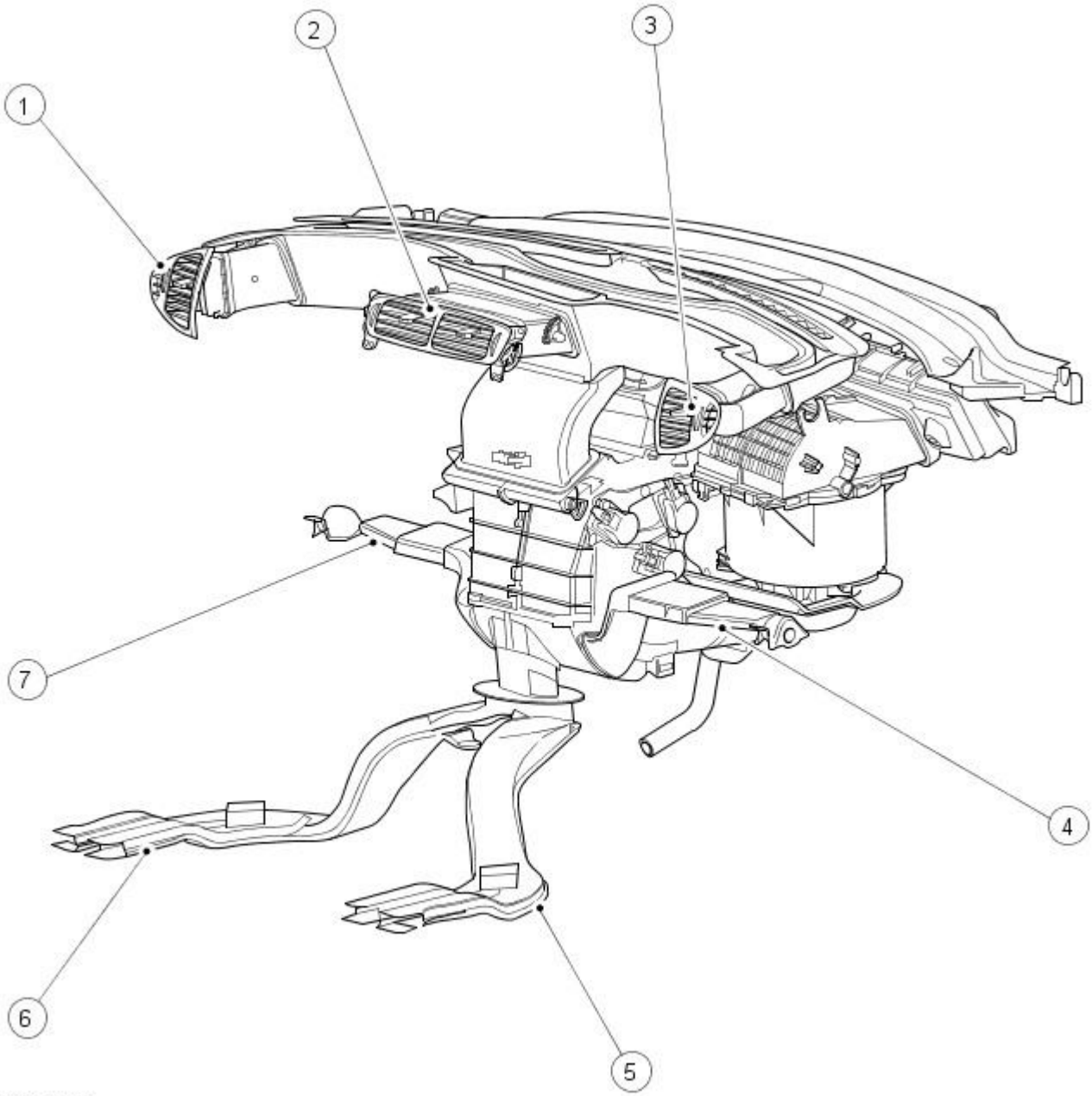

VUJ0004273

Item	Part Number	Description
1	—	Left-hand side register
2	—	Center register
3	—	Right-hand side register
4	—	Right-hand side front floor duct
5	—	Right-hand side rear floor duct
6	—	Left-hand side rear floor duct
7	—	Left-hand side front floor duct

The purpose of the air distribution system is to route air to the designated registers. This is accomplished when air enters the plenum through the fresh/recirculated air inlet and is routed to the desired outlets by use of distribution doors. The incoming stream of fresh air is passed through a pollen filter.

The air distribution system consists of the heater core, air conditioning (A/C) evaporator core, A/C blower motor and all of the distribution doors. All of the air is mixed and distributed inside of the plenum chamber, depending on the distribution door positions.

Air ducts route air to specified areas of the air distribution system. These areas are the floor ducts, side window registers, windshield demister, instrument panel vents and instrument panel center registers.

Published: 11-May-2011

Air Distribution and Filtering - Air Distribution and Filtering

Diagnosis and Testing

For additional information, refer toSection 412-00 Climate Control System - General Information

Air Distribution and Filtering - Center Registers

Removal and Installation

Removal

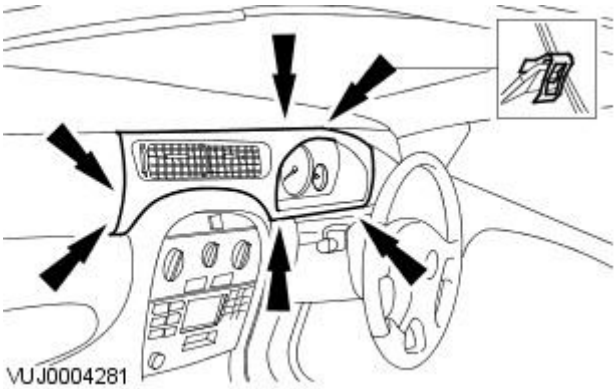

1. Remove the instrument panel veneer trim.

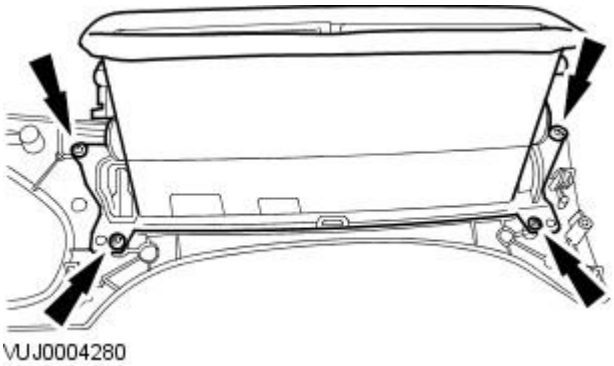

2. Remove the center registers.

- Remove the center register retaining screws.

Installation

1. To install, reverse the removal procedure.

Air Distribution and Filtering - Driver Side Register

Removal and Installation

Removal

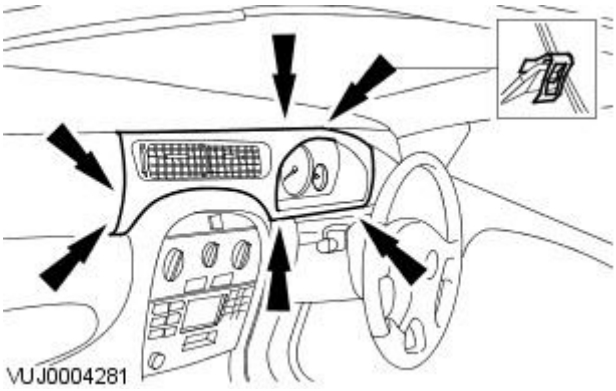

1. Remove the instrument panel veneer trim.

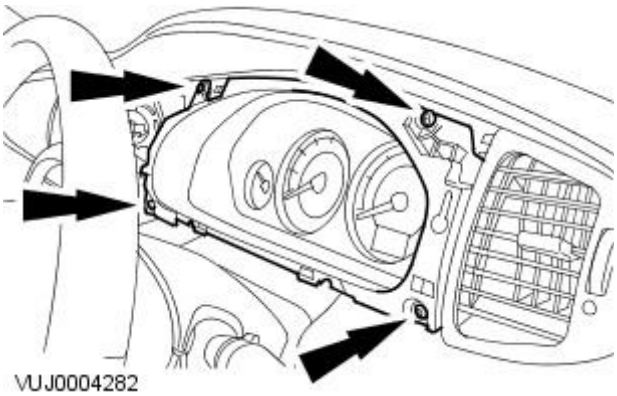

2. Remove the instrument panel surround.

- Remove the instrument panel surround retaining screws.

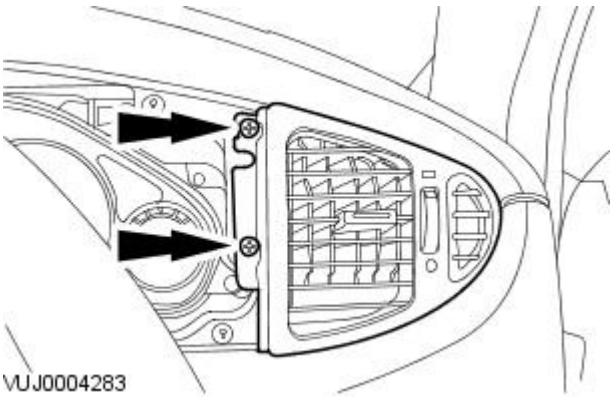

3. Remove the driver side register.

- Remove the driver side register retaining screws.

Installation

1. To install, reverse the removal procedure.

Air Distribution and Filtering - Front Footwell Duct LH

Removal and Installation

Removal

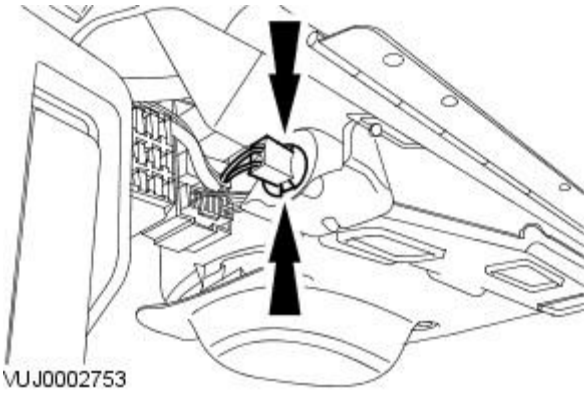

1. Detach the footwell lamp.

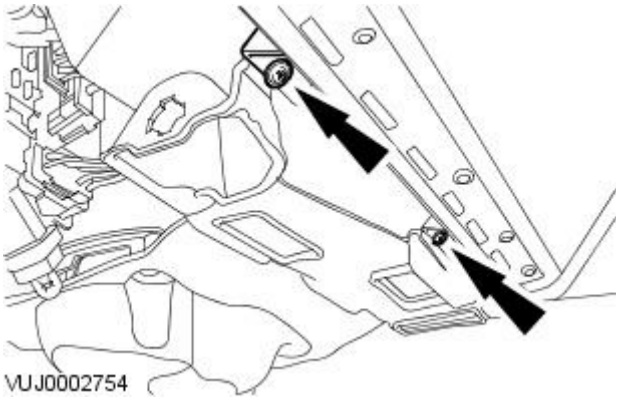

2. Detach the floor register.

- Remove the floor register retaining screws

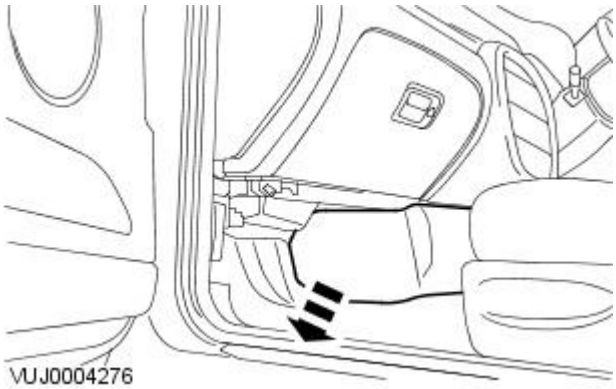

3. Detach the front of the center consul side trim.

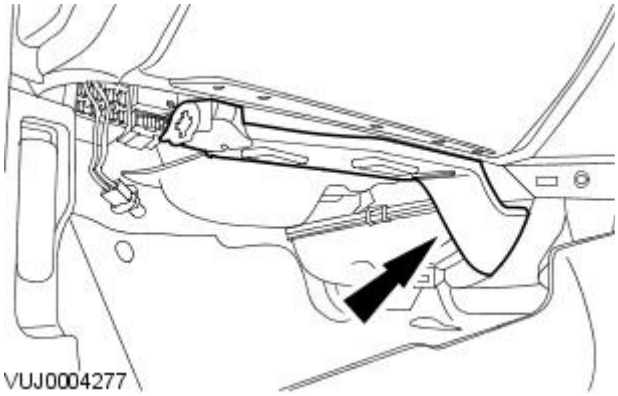

4. Remove the register.

Installation

1. To install, reverse the removal procedure.

Air Distribution and Filtering - Front Footwell Duct RH

Removal and Installation

Removal

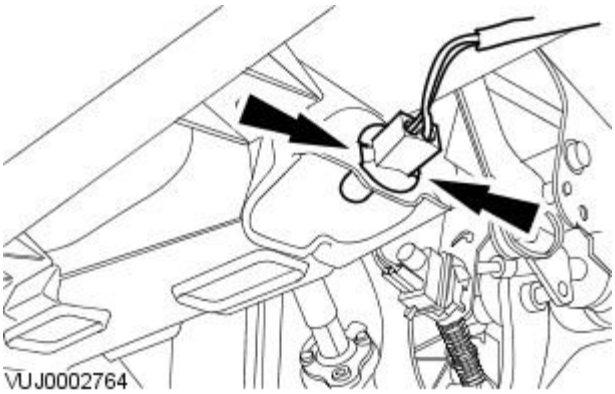

1. Detach the footwell lamp.

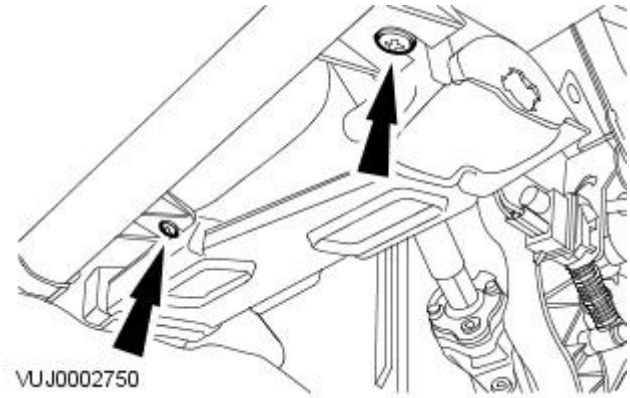

2. Detach the floor register.

- Remove the floor register retaining screws.

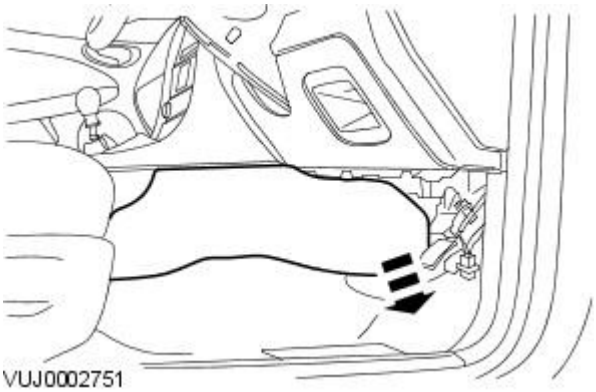

3. Detach the front of the center consul side trim.

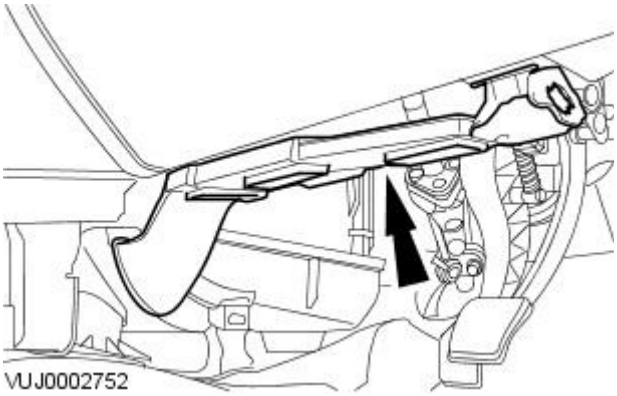

4. Remove the register.

Installation

1. To install, reverse the removal procedure.

Air Distribution and Filtering - Passenger Side Register

Removal and Installation

Removal

1. WARNING: To avoid accidental deployment and possible personal injury, the back up power supply must be depleted before repairing or replacing any airbag supplemental restraint system (SRS) components. To deplete the back up power supply energy, disconnect the battery ground cable and wait for one minute. Failure to follow this instruction may result in personal injury.

Disconnect the battery ground cable. For additional information, refer to Section 414-01 Battery, Mounting and Cables.

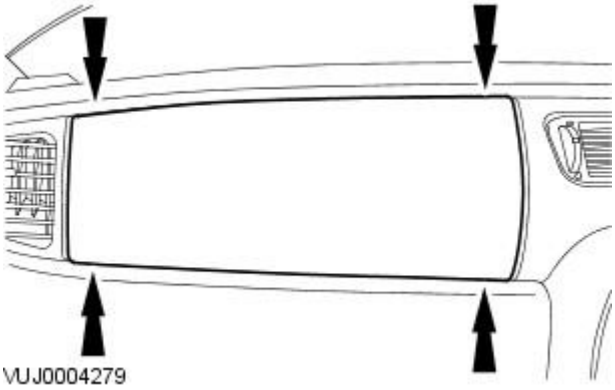

2. CAUTION: The passenger side air bag door is retained to the air bag by a securing strap.

Detach the passenger side air bag door.

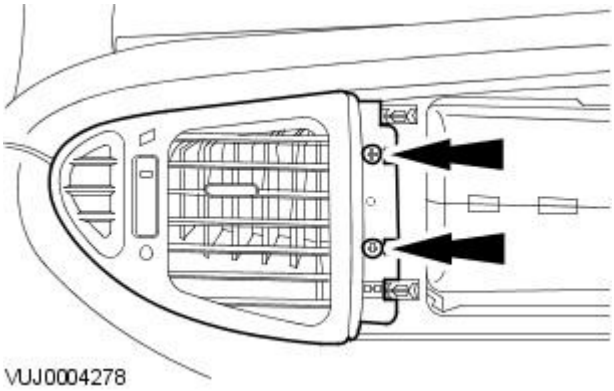

3. Remove the passenger side register.

- Remove the passenger side register retaining screws.

Installation

1. To install, reverse the removal procedure.

Air Distribution and Filtering - Pollen Filter

Removal and Installation

Removal

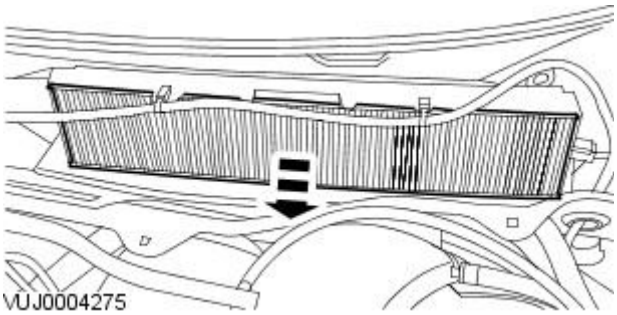

1. Remove the cowl vent screen.
   For additional information, refer to: Cowl Vent Screen (501-02 Front End Body Panels, Removal and Installation).
2. Remove the pollen filter.

Installation

1. To install, reverse the removal procedure.

Heating and Ventilation -

Lubricants, Fluids, Sealers and Adhesives

	Specification
In vehicle cross beam bonding	WSKM2G379-A1
In vehicle cross beam solvent wipe	WSKM14J251-A1

Torque Specifications

Description	Nm	lb-ft	lb-in
Evaporator core housing to in vehicle cross beam retaining bolts.	5	-	44
Blower motor housing to in vehicle cross beam retaining bolt.	7	-	62
In vehicle cross beam to vehicle body retaining bolts.	25	18	-
Evaporator core housing nut and washer assembly.	1	-	9
Pollen filter housing retaining nuts.	7	-	52

Heating and Ventilation - Heating and Ventilation

Description and Operation

The heating and defrosting system is a blended air system and consists of a heater core, a blower motor, distribution doors and an evaporator core.

Air is directed through the heater core for heating and around for cooling, mixed and discharged through outlets in the plenum assembly to the floor, instrument panel registers or defrost nozzles as required

The heating and defrosting system:

- controls the vehicle air temperature and, during A/C operation, reduces the relative humidity of the air inside the vehicle.
- delivers heated or cooled air to maintain the vehicle interior temperature and comfort level.
- controls the A/C blower motor speed.

The blower motor draws outside air through the air inlet filter and duct during all system operations except for MAX A/C cooling (when recirculated air is used).

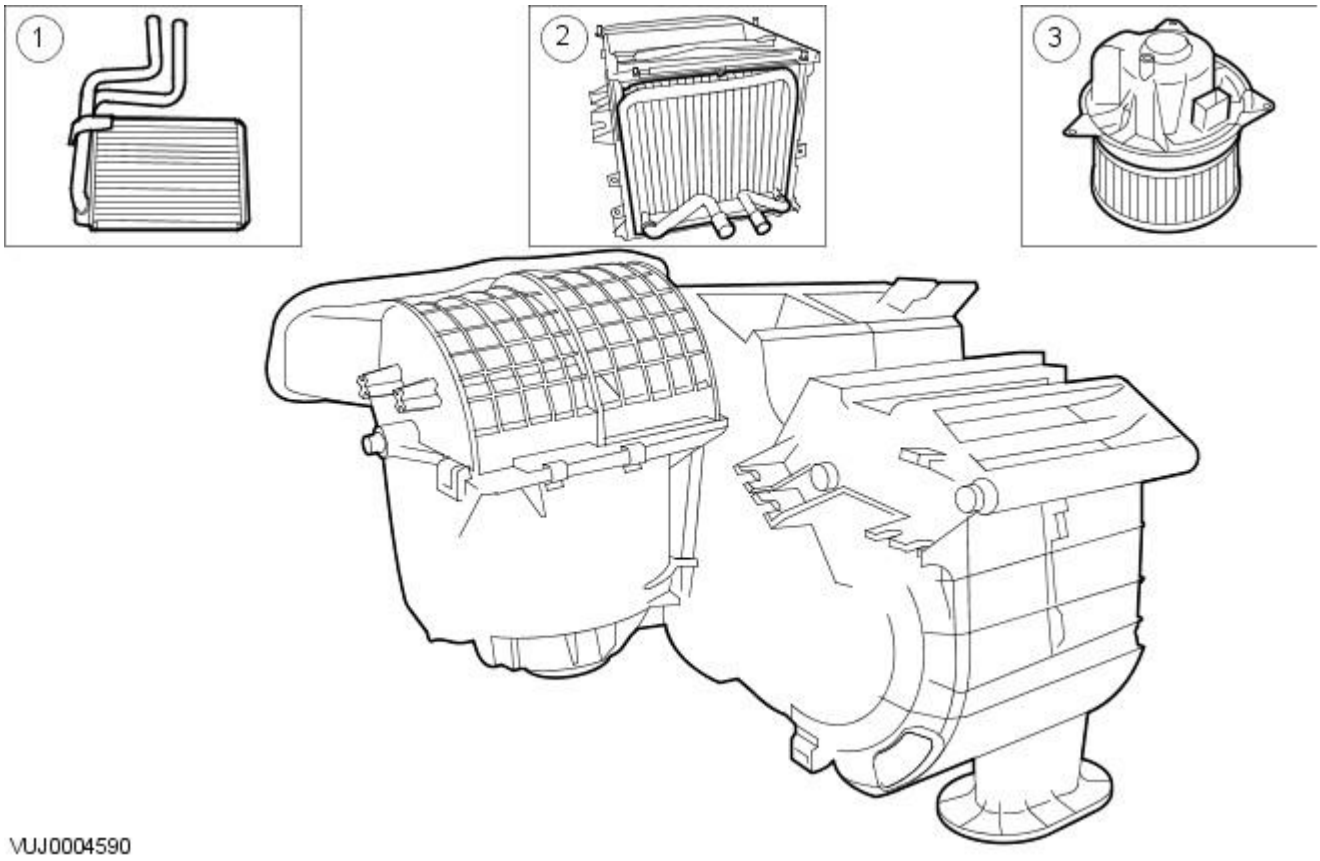

Item	Part Number	Description
1	—	Heater core
2	—	Evaporator core
3	—	Blower motor

Heater Core

The heater core consists of fins and tubes arranged to extract heat from the engine coolant and transfer it to air passing through the heater core. Air passing through the heater core is then directed to the relevant register.

Blower Motor

The HVAC blower motor pulls air from the air inlet and forces it into the evaporator housing and plenum assembly which is attached to the instrument panel where it is mixed and distributed.

Published: 11-May-2011

Heating and Ventilation - Heating and Ventilation

Diagnosis and Testing

For additional information, refer to Section 412-00 Climate Control System - General Information.

Heating and Ventilation - Blower Motor

Removal and Installation

Removal

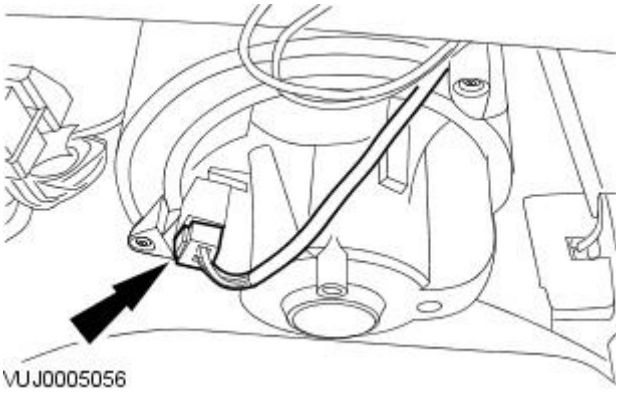

1. Remove the blower motor lower cover.
2. Disconnect the electrical connector.

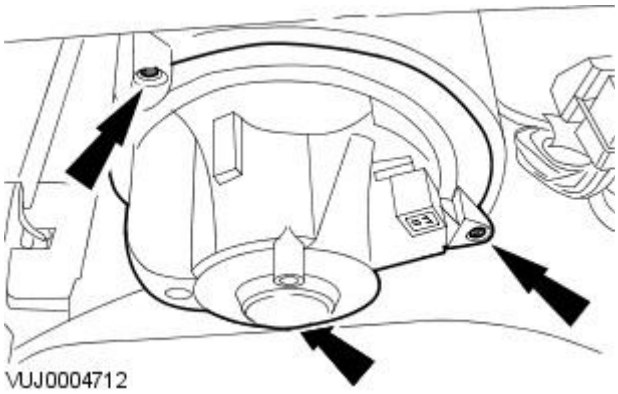

3. Remove the blower motor.
   - Remove the blower motor retaining screws.

Installation

1. To install, reverse the removal procedure.

Heating and Ventilation - Evaporator Core Housing

Removal and Installation

Removal

1. Disconnect the battery ground cable.
2. Recover the refrigerant. For additional information, refer to Section 412-00 Climate Control System - General Information.
3. Drain the cooling system. For additional information, refer to Section 303-03A Engine CoolingSection 303-03B Engine Cooling.
4. Disconnect the drain tube from the heater core.

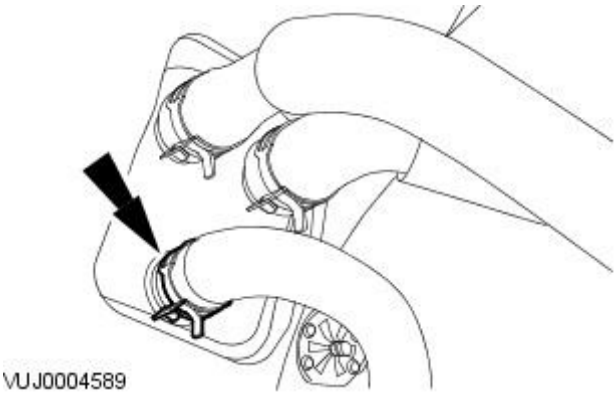

5. Disconnect the heater hose from the heater core.

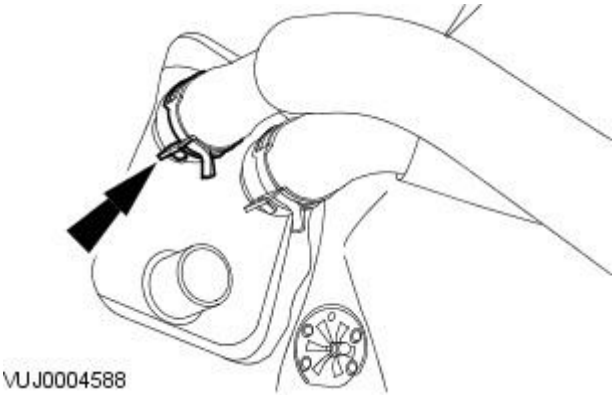

6. Disconnect the heater hose from the heater core.

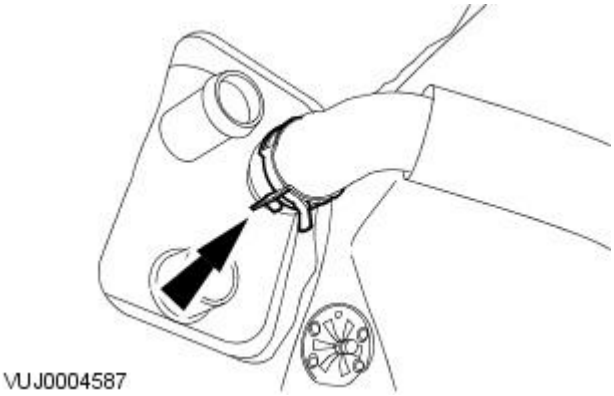

7. Lower the vehicle.
8. Remove the refrigerant line retaining clip.

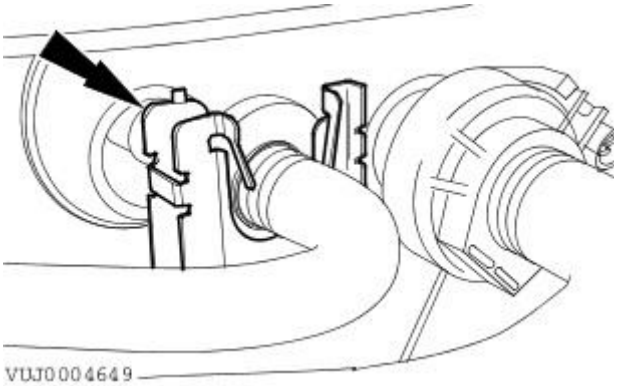

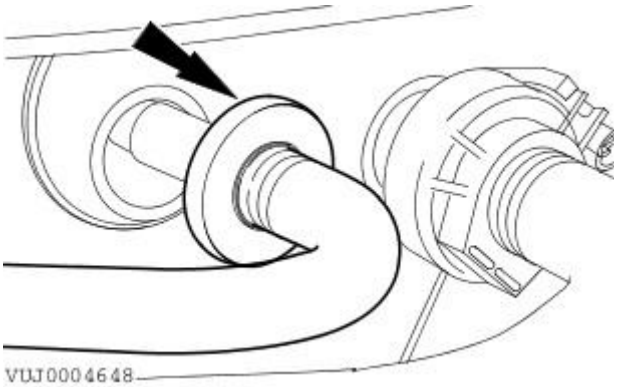

9. Using a suitable tool disconnect the refrigerant line.

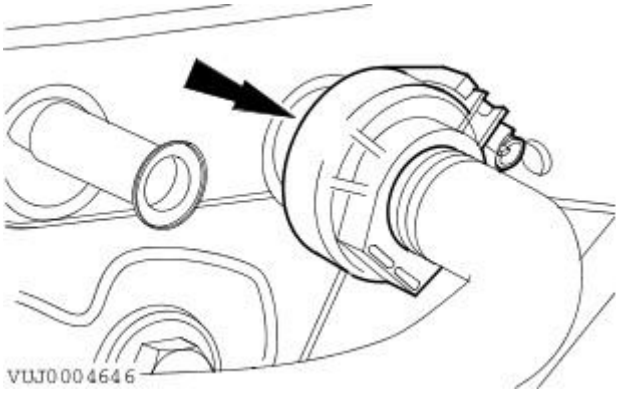

10. Remove the refrigerant line retaining clip.

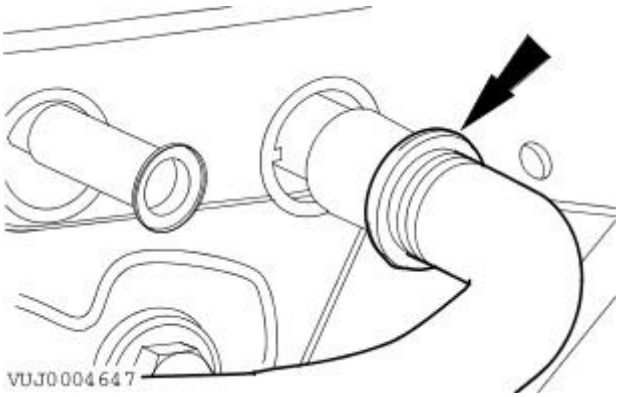

11. Using a suitable tool disconnect the refrigerant line.

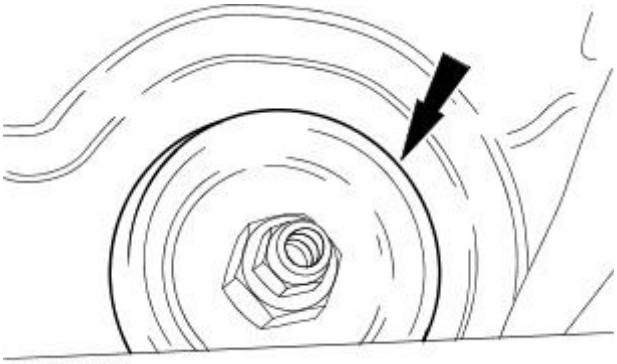

12. Remove the evaporator core housing lower securing nut.

13. Remove the instrument panel. For additional information, refer to Section 501-12 Instrument Panel and Console.

14. Remove the center register air duct.

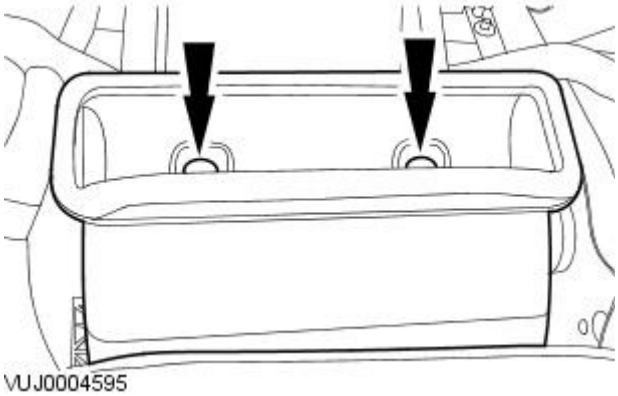

15. Disconnect the electrical connectors.

1. On manual A/C only.
2. All vehicles.

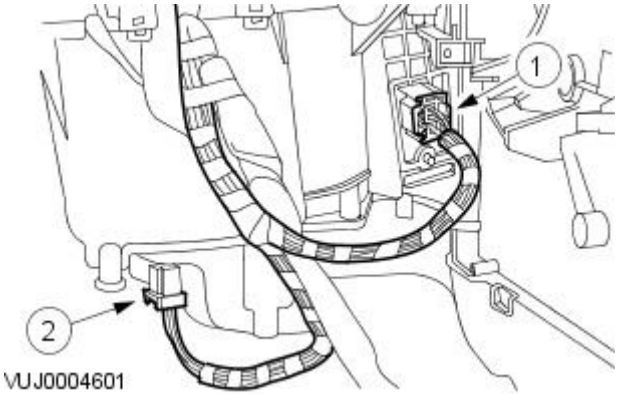

16. Disconnect the electrical connector.

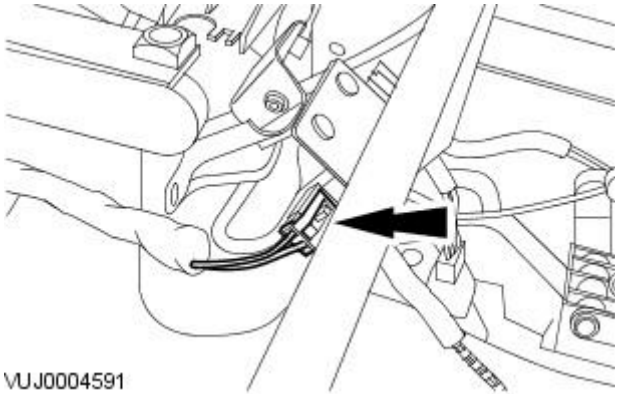

17. Remove the glove box mounting frame.

- Remove the retaining bolts.

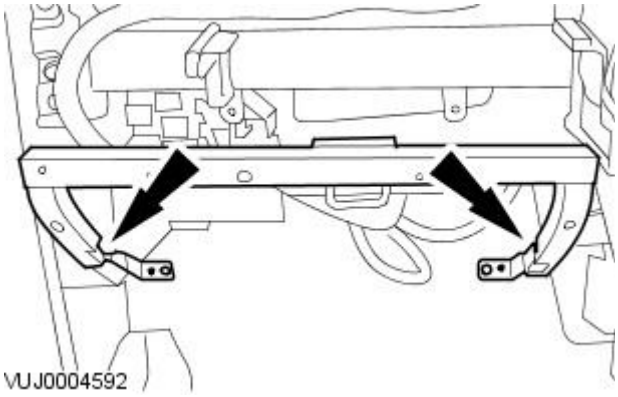

18. Disconnect the electrical connector.

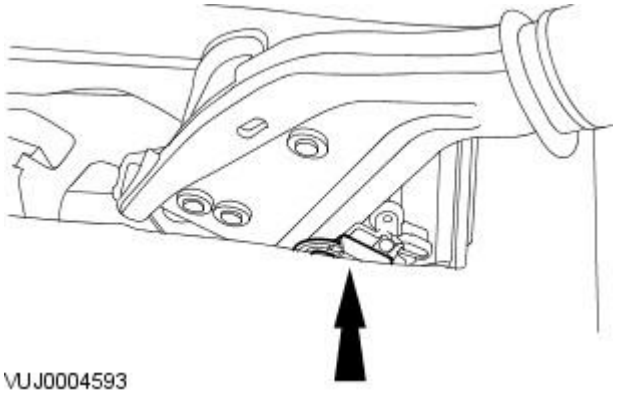

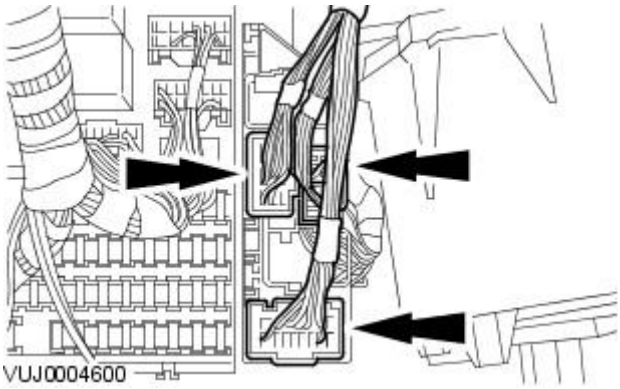

19. Disconnect the electrical connectors.

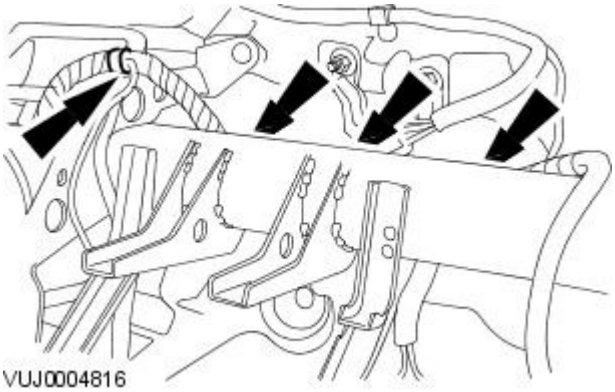

20. Detach the wiring harness.

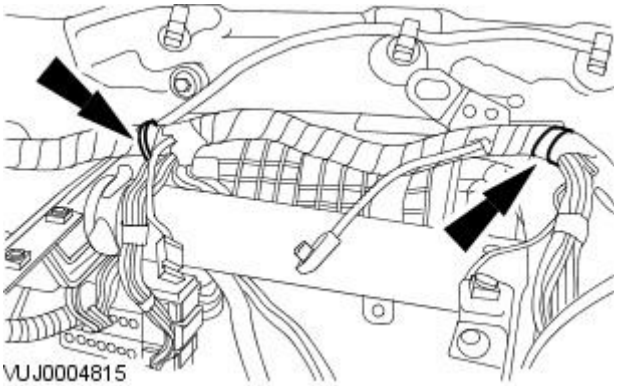

21. Detach the wiring harness.

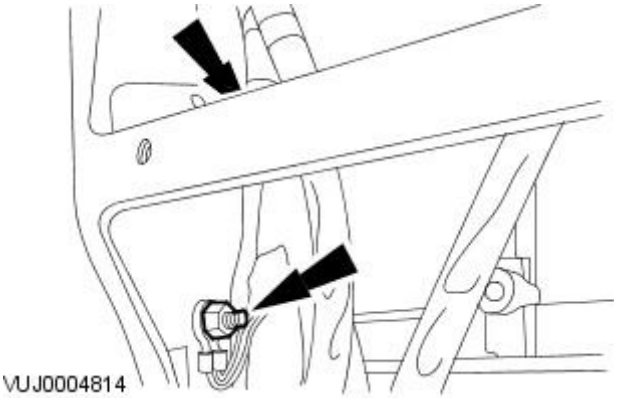

22. Detach the wiring harness.

- Remove the earth lead retaining bolt.
- Detach the wiring harness.

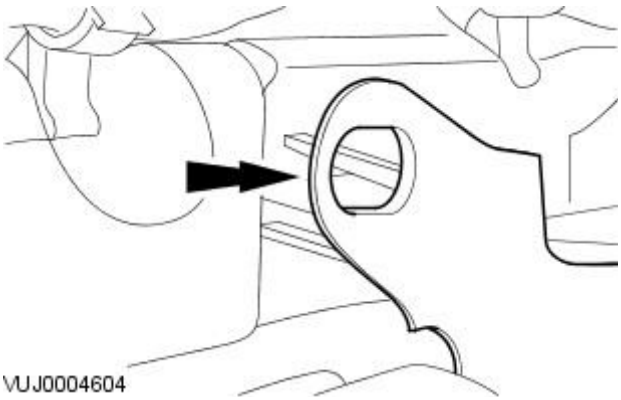

23. Using a suitable tool cut the bonding on the in vehicle cross beam.

- Left-hand side shown, right-hand side similar.

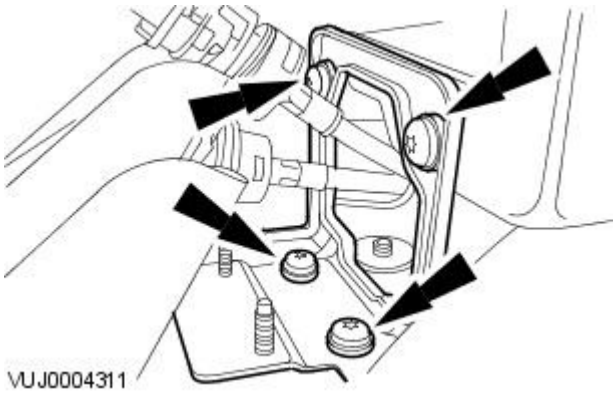

24. Detach the center of the in vehicle cross beam.

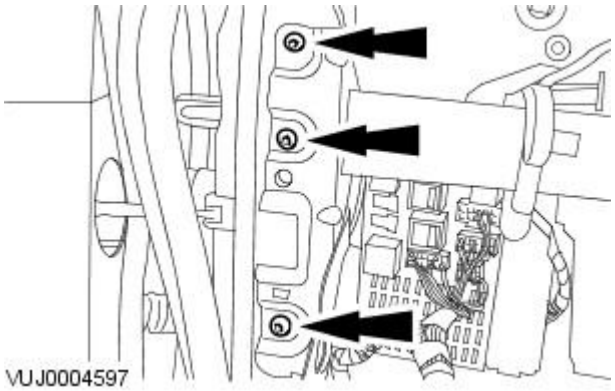

25. Remove the in vehicle cross beam retaining bolts.

- Left-hand side shown, right-hand side similar.

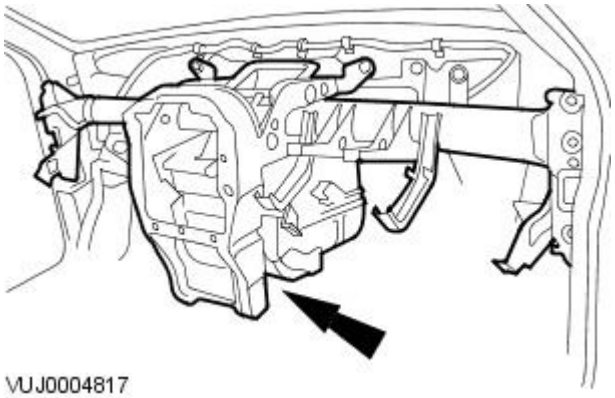

26. Remove the in vehicle cross beam and the evaporator core housing.

Installation

1. NOTE: Remove the PU bonding from the in vehicle cross beam.

• NOTE: Clean the in vehicle cross beam locator and the vehicle body locating pegs with a solvent wipe, part number WSKM14J251-A1.

• NOTE: Apply the PU bonding, part number WSKM2G379-A1 to the in vehicle cross beam locating pegs.

To install, reverse the removal procedure.

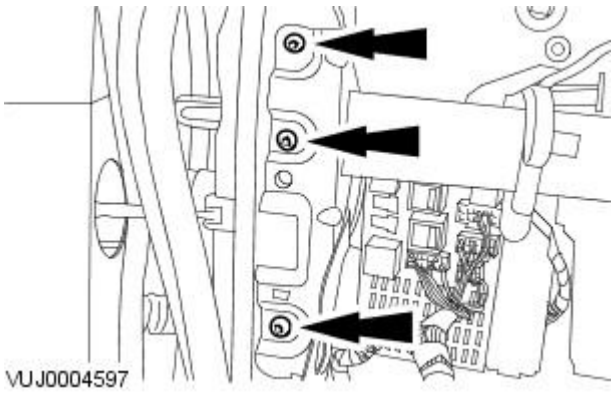

2. Tighten to 25 Nm.

- Left-hand side shown, right-hand side similar.

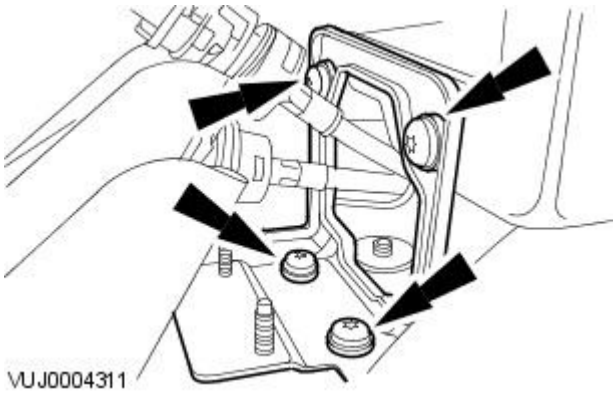

3. Tighten to 25 Nm.

Heating and Ventilation - Heater Core

Removal and Installation

Removal

1. NOTE: If a leak is suspected, the heater core must be leak tested in the vehicle before removal. For additional information, refer to Section 412-00 Climate Control System - General Information.

Drain the cooling system. For additional information, refer to Section 303-03A Engine CoolingSection 303-03B Engine Cooling.

2. Disconnect the drain tube from the heater core.

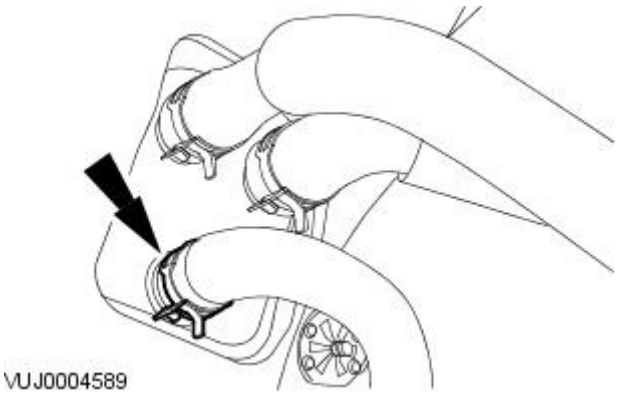

VUJ0004589

3. Disconnect the heater hose from the heater core.

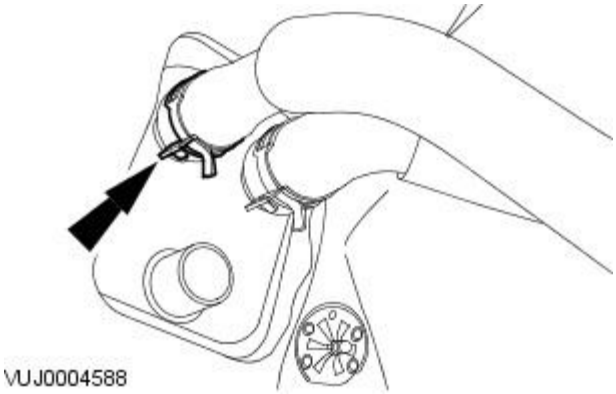

VUJ0004588

4. Disconnect the heater hose from the heater core.

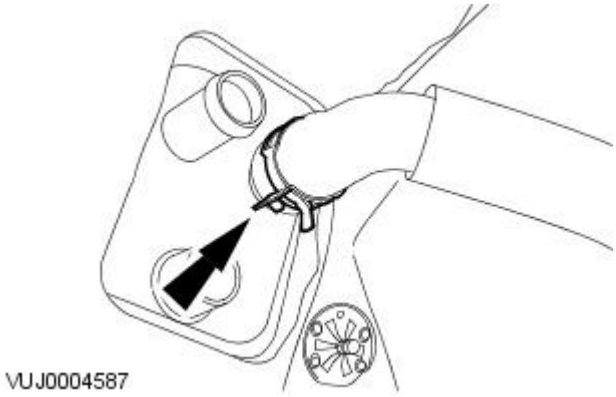

VUJ0004587

5. Remove the center console. For additional information, refer to Section 501-12 Instrument Panel and Console.

6. Position the heater core air duct up.

1. Remove the heater core air duct retaining screw.
2. Position the heater core air duct up.

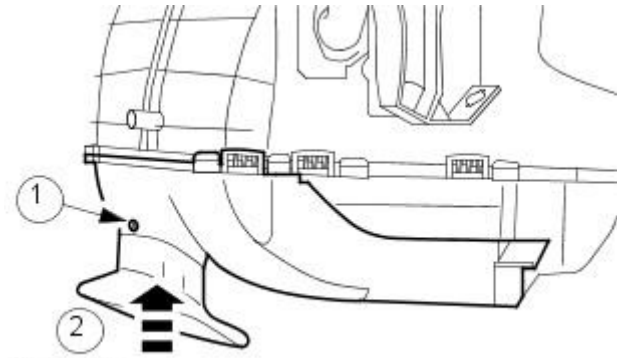

VUJ0004713

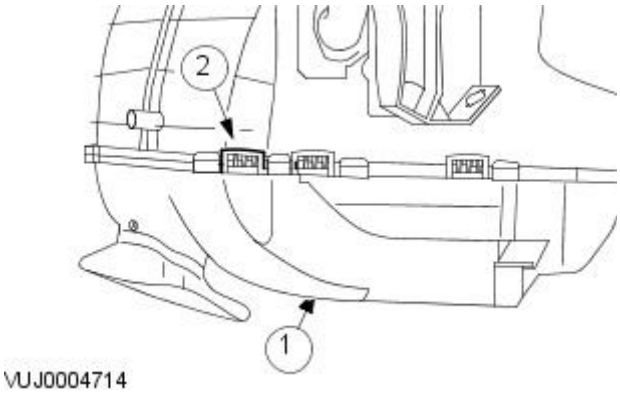

7. Remove the heater core air duct housing.

1. Remove the heater core air duct housing retaining screws.
2. Remove the heater core air duct housing.

- Release the retaining tabs.
- Right-hand side shown, left-hand side similar.

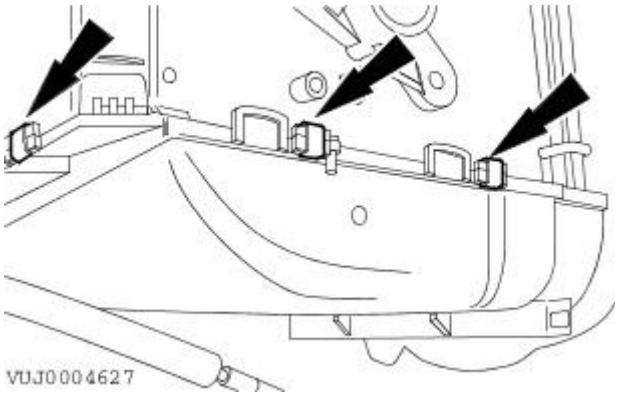

8. Remove the heater core housing retaining clips.

- Right-hand side shown, left-hand side similar.

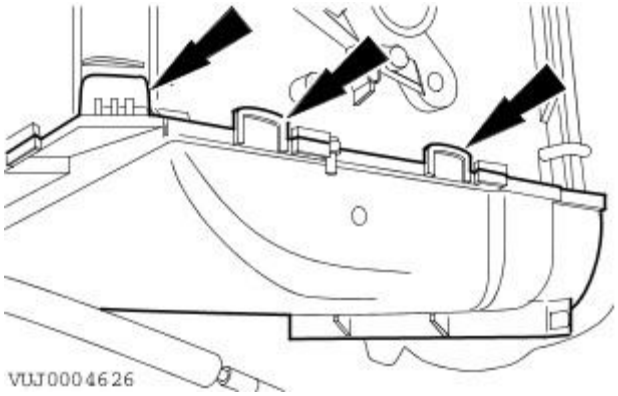

9. Remove the heater core housing

- Release the heater core housing retaining tabs.
- Right-hand side shown, left-hand side similar.

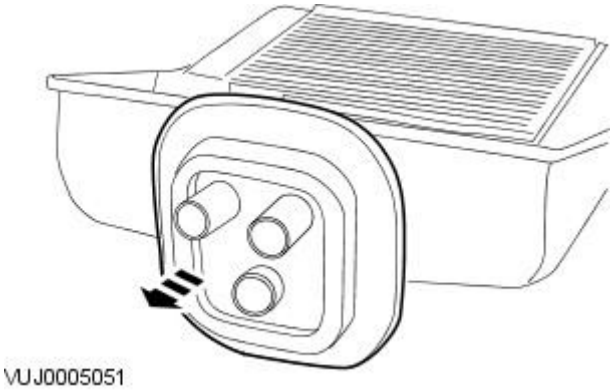

10. Remove the seal.

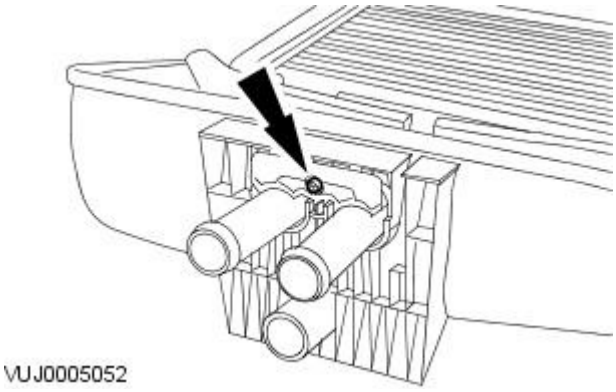

11. Remove the heater core retaining screw.

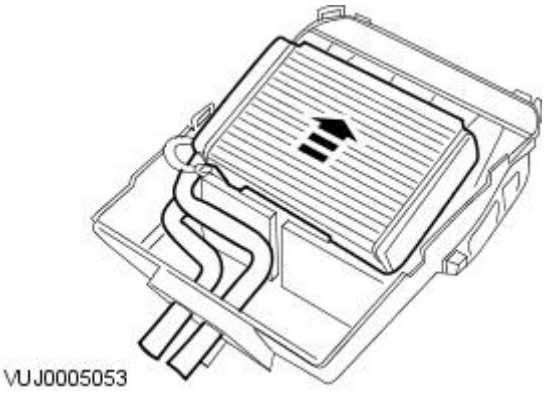

12. Remove the heater core.

Installation

1. To install, reverse the removal procedure.

Heating and Ventilation - Evaporator Core Housing

Disassembly and Assembly

Disassembly

1. Remove the evaporator core housing. For additional information, refer to Evaporator Core Housing.
2. Detach the blower motor from the in vehicle cross beam..

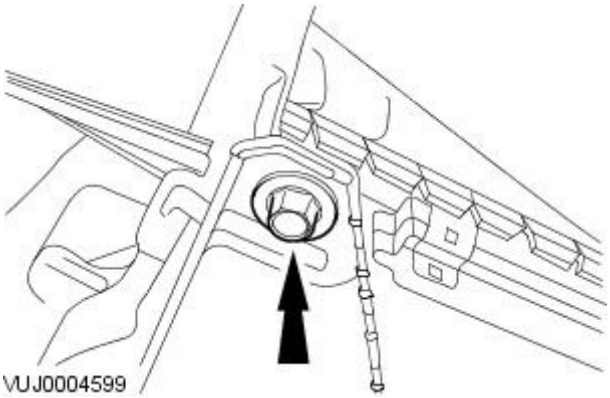

3. Remove the evaporator core housing from the in vehicle cross beam.

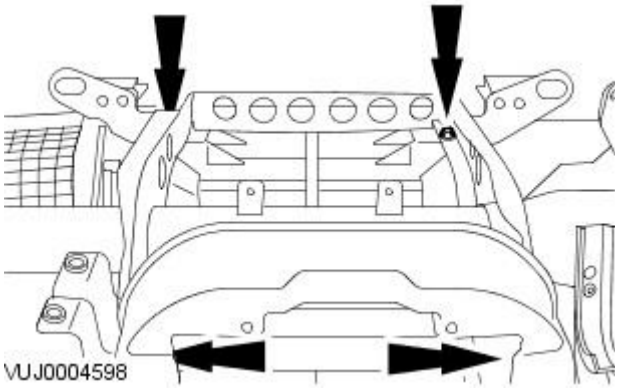

4. Remove the heater core retaining clips.

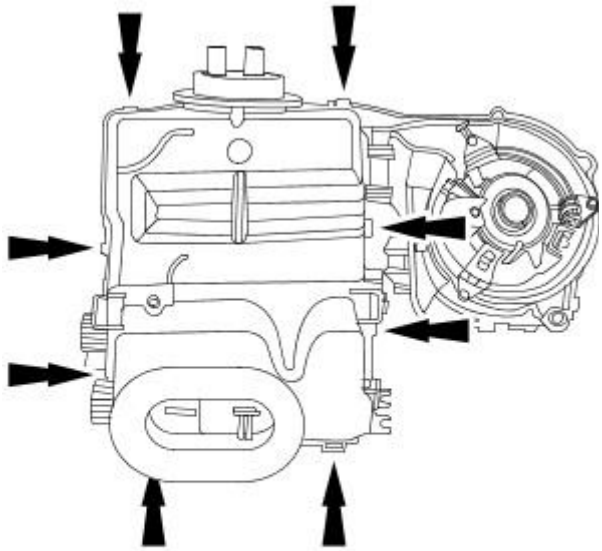

VUJ0004574

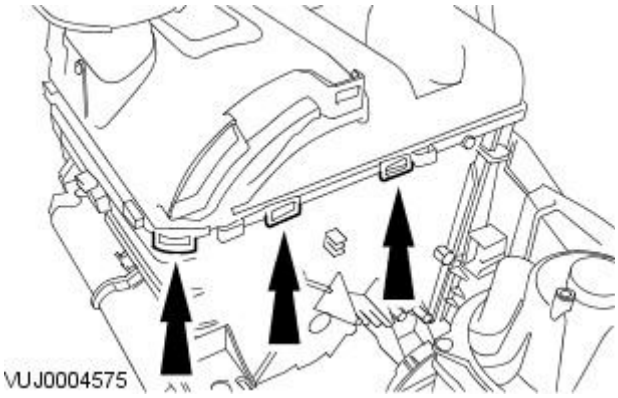

5. Release the heater core housing retaining tabs.

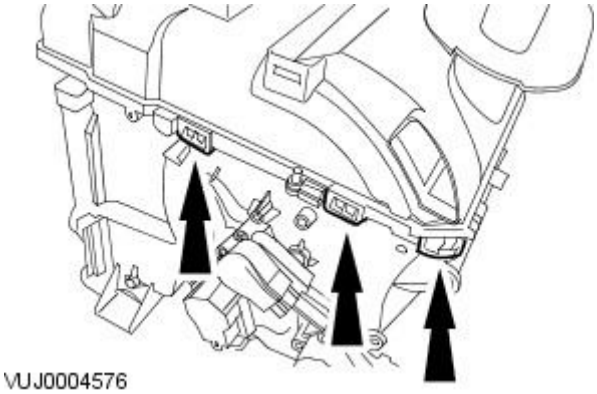

6. Remove the heater core housing.

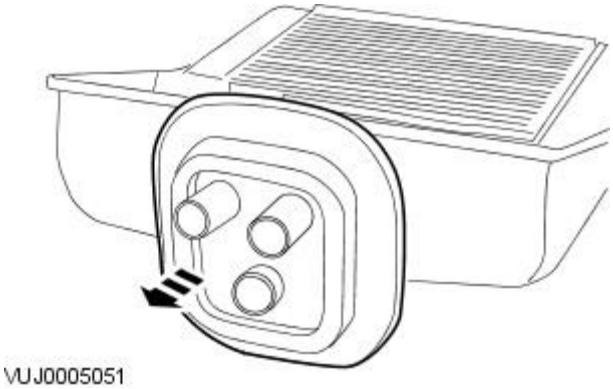

7. Remove the rubber seal.

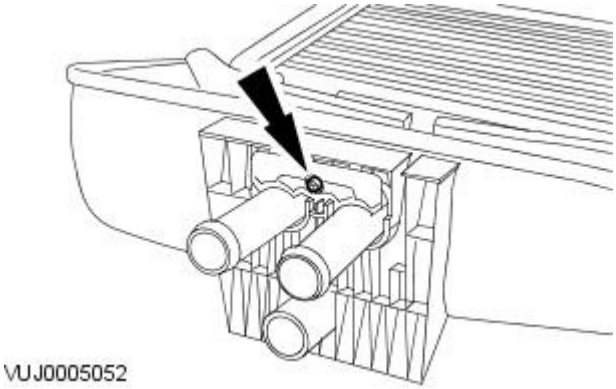

8. Remove the heater core retaining bolt.

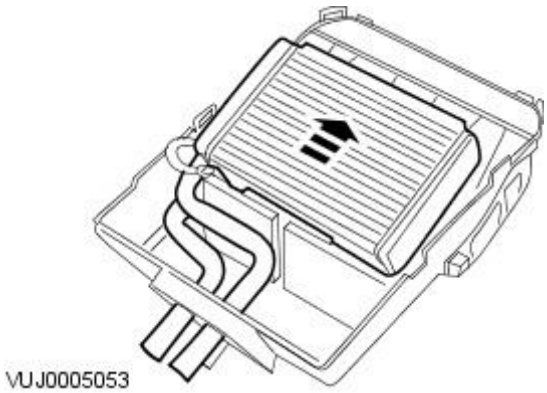

9. Remove the heater core.

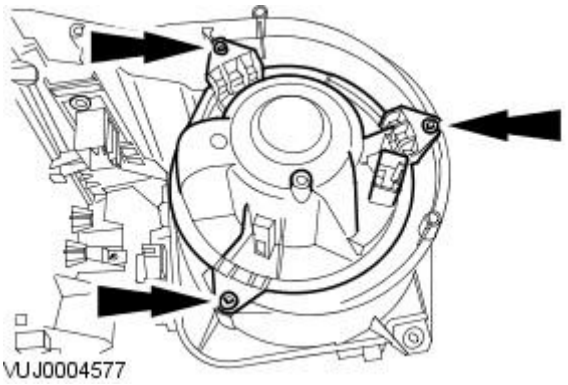

10. Remove the blower motor.

- Remove the blower motor retaining screws.

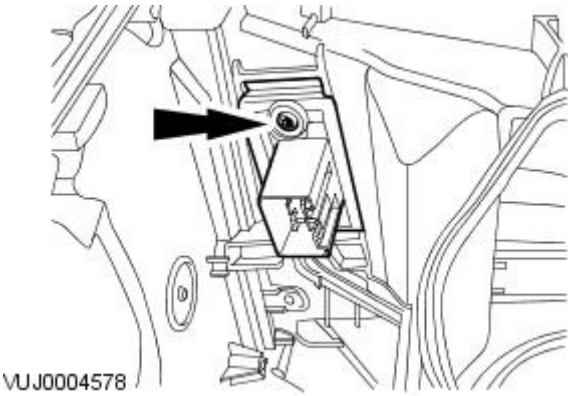

11. Remove the manual control blower motor resistor.

- Remove the manual control blower motor resistor retaining screw.

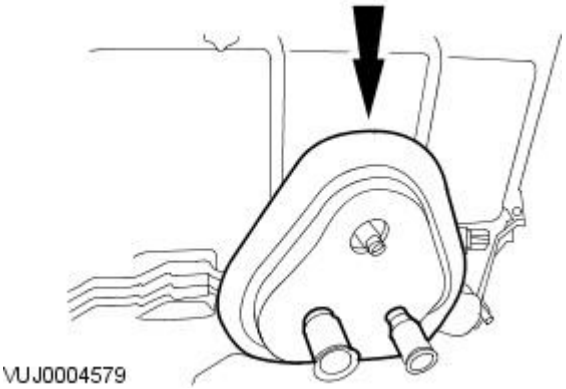

12. Remove the rubber seal.

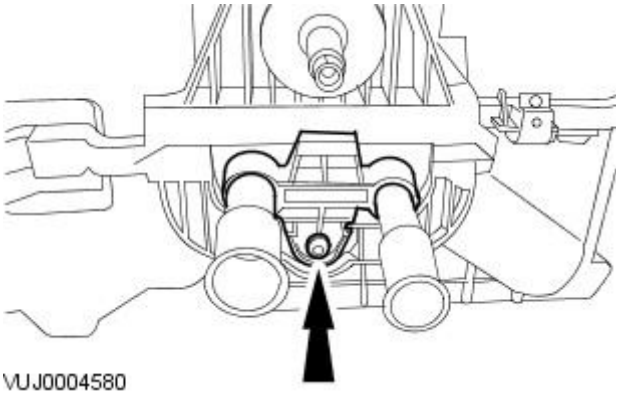

13. Remove the evaporator core retaining screw.

14. Remove the evaporator core upper housing.

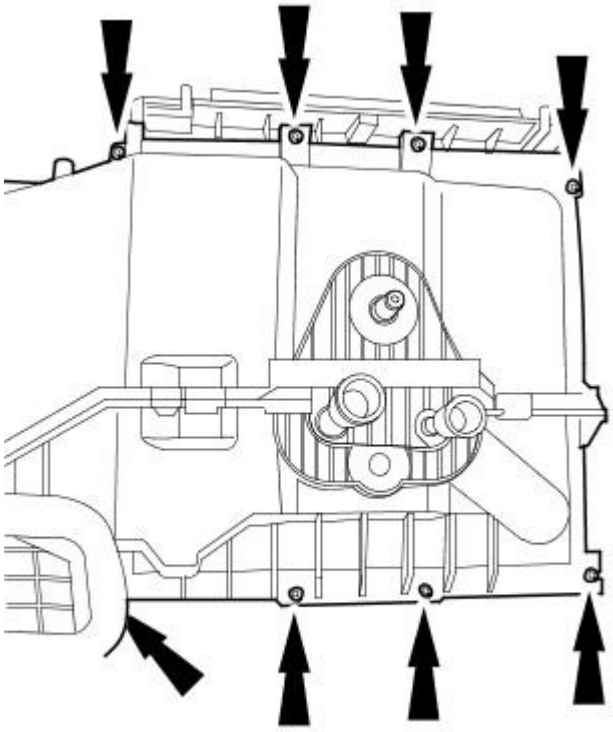

VUJ0004581

15. Remove the evaporator core.

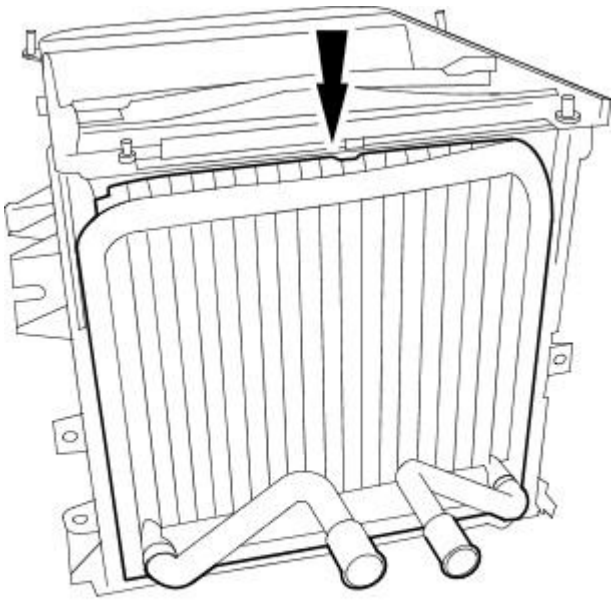

VUJ0004582

Assembly

1. To assemble, reverse the disassembly procedure.

2. Tighten to 7 Nm.

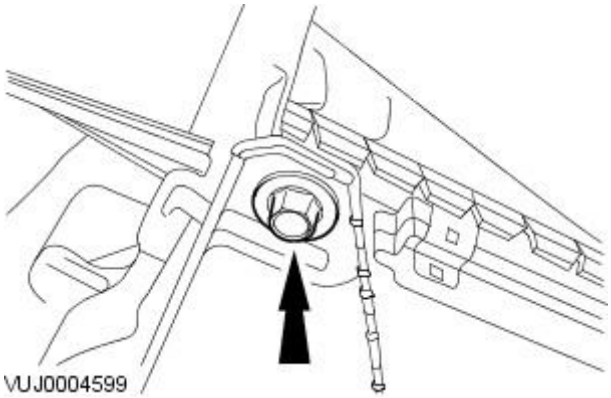

VUJ0004599

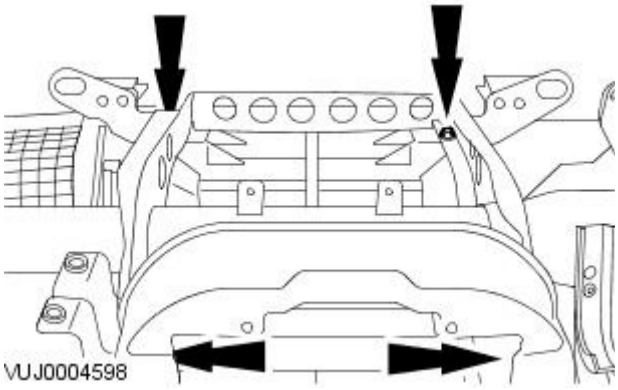

3. Tighten to 5 Nm.

Auxiliary Heating -

Torque Specifications

Description	Nm	lb-ft	lb-in
Electric booster heater retaining nuts	10	-	89
Heating element electrical connector retaining nuts	4	-	35

Auxiliary Heating - Electric Booster Heater

Description and Operation

Due to the high-efficiency of the diesel engine, there is insufficient waste-heat available to the heater core. An auxiliary electrical booster heater is installed as standard. When the specified operating conditions are met, the heater is activated to raise the temperature of the coolant before it enters the heater core.

The heater is located at the lower left-hand side of the bulkhead and is integral to the cooling system.

The heater comprimises of an aluminum housing into which three glow-plug elements are located. Each element has a heating capability of 300 Watts.

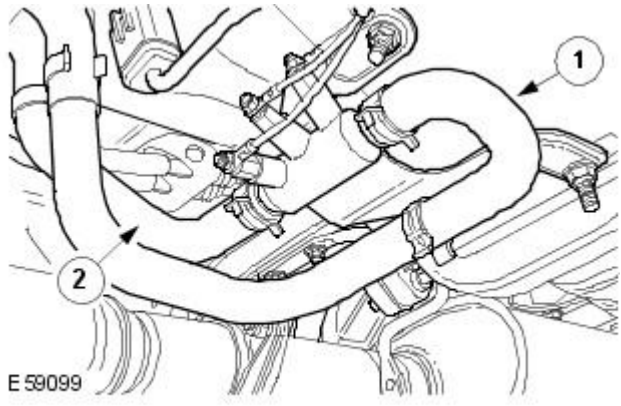

Item	Part Number	Description
1	-	Coolant inlet hose
2	-	Coolant outlet hose

The powertrain control module (PCM) determines which (if any) of the elements within the auxiliary heater are activated depending on the following:

- cylinder head temperature (CHT)
- air charge temperature (ACT)
- load condition of the generator

The auxiliary heater will:

- not activate should the ACT be greater than 5°C
- only be activated when the CHT is below 75°C and the ACT is below 5°C
- be de-activated should the CHT rise above 75°C
- not activate if the generator saturation is above 90%

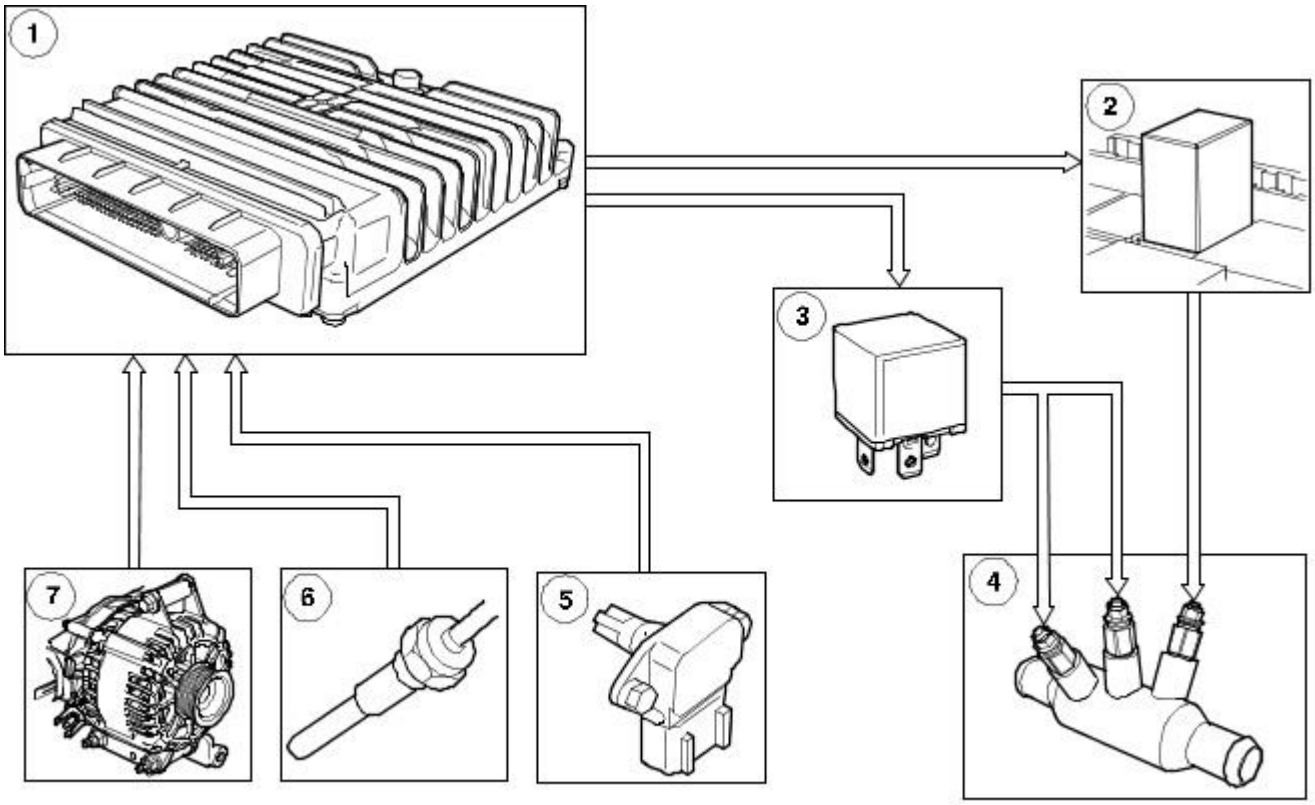

E59100

Item	Part Number	Description
1	-	PCM
2	-	Relay 1
3	-	Relay 2
4	-	Heater

5	-	TMAP sensor
6	-	CHT sensor
7	-	Generator

Provided the temperature conditions are satisfied and depending on the load condition of the generator, the PCM will cause one of the following to occur:

- activation of relay 1
- activation of relay 2
- activation of both relays
- no activation of either relay

The PCM software includes a calibrated map, which is used in conjunction with generator load to define the heater switching-points relative to actual generator speed.

At all times during heater operation, the system is designed to allow as manyglow-plug elements as possible to be activated, without causing the generator to become saturated.

Published: 11-May-2011

Auxiliary Heating - Fuel Fired Booster Heater

Description and Operation

For markets that experience extremely low temperatures, a fuel fired booster heater is installed in place of the electrical booster heater.

The fuel fired booster heater only operates when the engine is running. The fuel fired booster heater is located at the lower left-hand side of the bulkhead and is integral to the cooling system.

The fuel fired booster heater provides the following:

- automatic operation
- quickly boosts the engine up to it's optimum operating temperature range
- reduces engine wear by keeping the engine at its optimum operating temperature
- helps to create a warm and comfortable vehicle interior
- provides greater heat levels for quicker defrosting of glass
- compact design and engine compartment mounting.

Fuel Fired Booster Heater System

The system consists of a fuel fired booster heater unit and fuel pump.

The fuel fired booster heater takes its coolant feed from the engine exhaust gas recirculation (EGR) system.

The fuel fired booster heater fuel pump is located above the heater and connected to the engine fuel-return line. The pump delivers metered quantities of fuel into the combustion chamber. A pressure-regulating valve is installed between the fuel intake and the pump to reduce the fuel pressure down to below 0.2 bar.

The fuel fired booster heater incorporates an electronic control module, this unit controls the operation of the fuel fired booster heater.

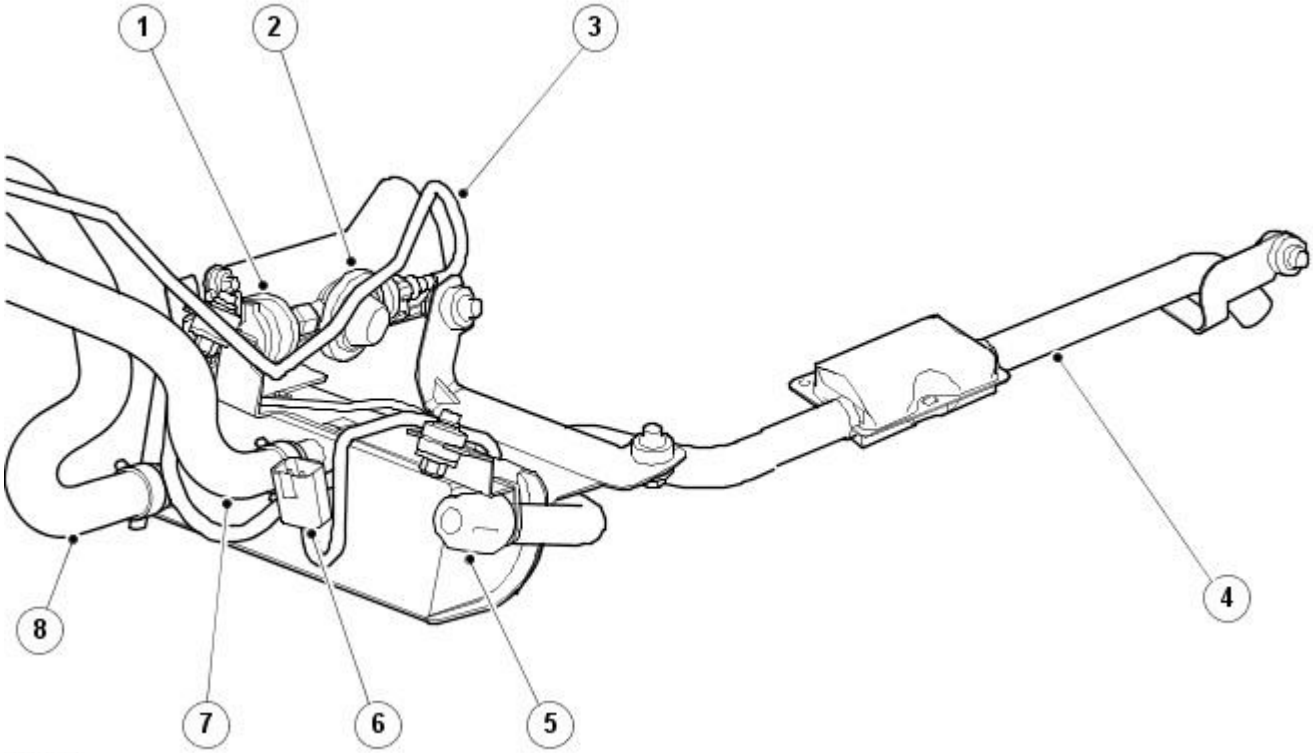

E64307

Item	Part Number	Description
1	-	Fuel pump
2	-	Regulating valve
3	-	Fuel feed pipe
4	-	Exhaust
5	-	Air intake
6	-	Electrical connector
7	-	Coolant inlet pipe
8	-	Coolant outlet pipe

Fuel Fired Booster Heater Unit Components

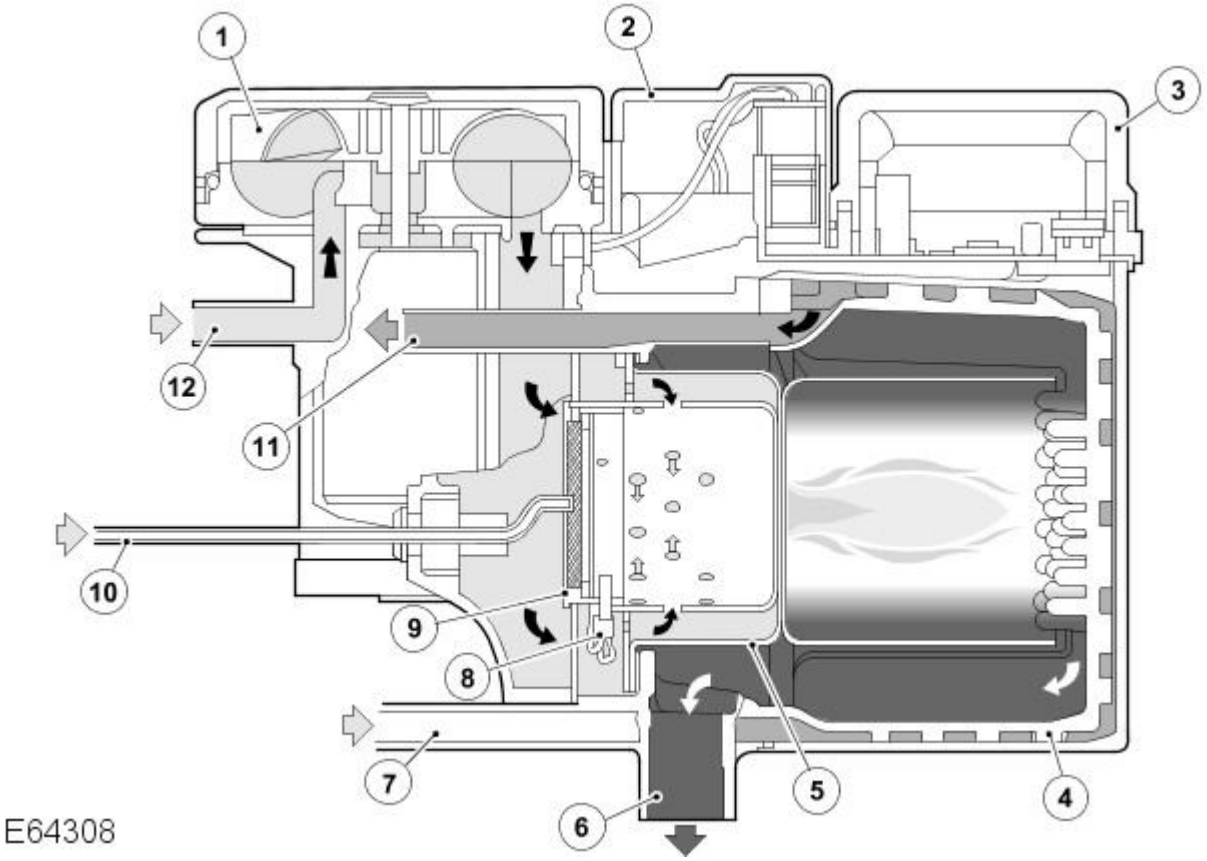

Item	Part Number	Description
1	-	Combustion air fan
2	-	Burner housing
3	-	Electronic control module
4	-	Heat exchanger
5	-	Burner insert
6	-	Exhaust
7	-	Coolant inlet
8	-	Glow plug / flame sensor
9	-	Evaporator
10	-	Fuel inlet
11	-	Coolant outlet
12	-	Air intake

Combustion Air Fan

The combustion air fan uses a permanent magnet motor with a fan wheel, which is driven by a pulse width modulated (PWM) voltage supply.

The combustion air fan delivers and regulates the flow of air into the fuel fired booster heater to support combustion of the fuel supplied by the fuel fired booster heater fuel pump. The combustion air fan is also used to purge and cool the fuel fired booster heater unit. A canister type muffler in the air inlet supply line is used to reduce operating noise.

Burner Housing

The burner housing incorporates the burner insert connections for the coolant ports and exhaust pipe. Exhaust gases are directed to atmosphere through a pipe and muffler.

Burner Insert

The burner insert incorporates the fuel combustion chamber, heat exchanger, evaporator and combined glow plug and flame sensor. Fuel from the fuel fired booster heater pump is supplied to a venturi, where it enters the combustion chamber to mix with air from the combustion air fan.

When commanded by the fuel fired booster heater electronic control module the glow plug supplies a temperature of approximately 1500 °C to provide the ignition source for the fuel/air mixture. The fuel fired booster heater electronic control module establishes combustion by monitoring the flame sensor. It measures the heat from the flame by converting the resistance value of the glow plug into a voltage signal.

Heat Exchanger

The heat exchanger transfers the heat generated by the combustion process into the vehicles coolant.

Two sensors located in the heat exchanger provide the fuel fired booster heater electronic control module with temperature values for the heat exchanger's casing temperature and coolant temperature.

The values from the sensors are used for fuel fired booster heater system adaptation between full-load, part-load and stand-by.

Electronic Control Module

The electronic control module controls and monitors the combustion operation. The module is ventilated by a hose routed from the air storage compartment of the burner.

Temperature Sensor

The temperature sensor located in the heat exchanger provides an electrical resistance signal to the electronic control module to indicate the coolant temperature status.

Overheat Protection

Overheat protection is controlled by a temperature resistor located in the heat exchanger. This protects against excessive operating temperatures. Overheat protection responds at a coolant temperature in excess of 125 °C and switches the fuel fired booster heater from '**stand-by**' to '**OFF**'.

Fuel Pump

The fuel fired booster heater electronic control module outputs a PWM voltage signal to activate the pump. When the pump is de-energized it provides a positive shut-off of the fuel supply.

Fuel Fired Heater Operation

The powertrain control module (PCM) determines the ignition of the heater by a solid-state relay, which switches battery voltage to the heater control module as appropriate.

An electronic control module incorporated into the fuel fired booster heater controls the operation of the fuel fired booster heater system. The module monitors the ambient air temperature sensor and cylinder head temperature sensor. Two further sensors located in the heat exchanger provide the module with an input of the heat exchanger's casing temperature and coolant temperature.

Ambient air temperature sensor

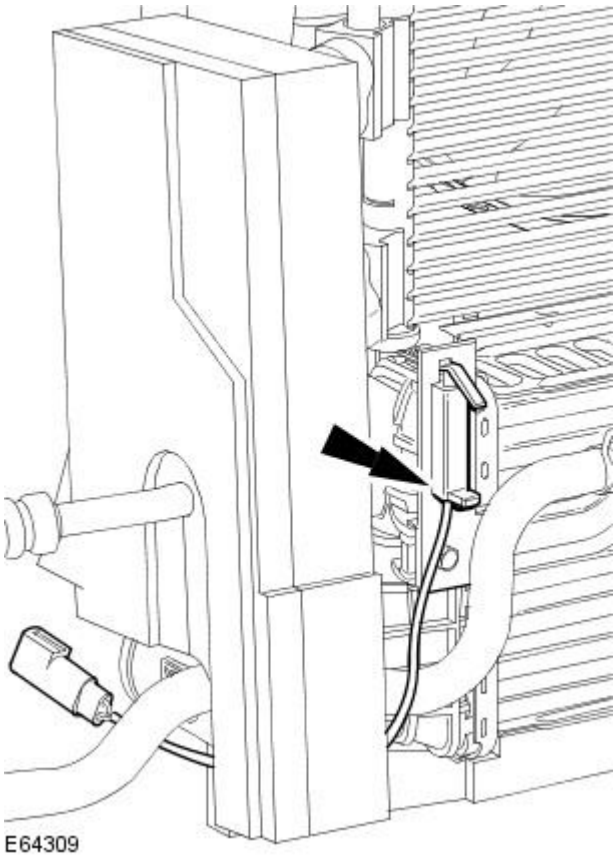

The values from the sensors are used for fuel fired booster heater system adaptation between full-load, part-load and stand-by.

To minimize drain on the battery, the fuel fired booster heater switches from full-load to part-load, on the coolant reaching 87 °C. The fuel fired booster heater will not operate if the battery voltage is below 10.2 volts.

Part-load operation offers the following benefits:

- Low noise output
- Low power operation
- Low fuel consumption

Switch On / Starting

During engine startup the fuel fired booster heater goes into stand-by. If the coolant circuit temperature is below 87 °C and the ambient temperature is below 5 °C the fuel fired booster heater starting sequence commences.

The glow plug is activated and after a delay the fuel pump commences operation and the fuel is ignited.

The combustion air fan operation is then initiated. The combustion air fan speed is increased in two ramps to nearly full-load operation. After a stabilization phase the combustion air fan speed is again increased to full-load and the glow plug is deactivated.

After these events have been completed the fuel fired booster heater enters Automatic Heating Operation.

Automatic Heating Operation

During automatic heating operation the glow plug functions as the flame sensor to monitor the flame condition. In the event of a no flame condition, a restart is automatically initiated.

If the no flame condition persists, fuel delivery is stopped and the fuel fired booster heater enters an error lockout with a timed shutdown of the combustion air fan to cool the fuel fired booster heater unit.

Auxiliary Heating - Auxiliary Heater

Diagnosis and Testing

Principle of operation

There are two types of auxiliary heater, the **electric booster heater**, which is fitted as standard, and the **fuel fired booster heater**, which is an option. For additional information on the fuel fired booster heater.
REFER to: Fuel Fired Booster Heater (412-02B Auxiliary Heating, Diagnosis and Testing).

The electric booster heater functions in the following way:

Automatic activation occurs if:

- The ambient temperature is below five degrees C (41 degrees F)
- The cylinder head temperature is below 71 degrees C (160 degrees F)
- The engine is running
- The generator is charging

The coolant is heated by three glowplugs mounted in their own housing through which the coolant passes as it circulates.

Depending on the conditions detected, the control module will activate the appropriate number of glowplugs to achieve the desired level of heating.

The system will deactivate once the cylinder head temperature reaches 85 degrees C (185 degrees F), but will automatically reactivate if the temperature drops below 71 degrees C (160 degrees F) for whatever reason.

Inspection and Verification

1. **1.** Verify the customer concern.
2. **2.** Visually inspect for obvious signs of mechanical or electrical damage.

Visual inspection chart

Mechanical	Electrical
• Coolant level • Heater unit and connections	• Fuses • Relays • Harnesses • Connectors • ECM • Cylinder head temperature (CHT) sensor • Charging system

3. **3.** If an obvious cause for an observed or reported concern is found, correct the cause (if possible) before proceeding to the next step
4. **4.** If the cause is not visually evident, verify the symptom and refer to the diagnostic trouble code (DTC) index.

Diagnostic Trouble Code (DTC) index

DTC	Description	Possible causes	Action
P0380	Auxiliary heater circuit(s)	• Auxiliary heater relay circuit • Auxiliary heater control circuit	For auxiliary heater circuit tests. GO to Pinpoint Test A.
P1543	Auxiliary heater 1 circuit	• Auxiliary heater 1 relay circuit • Auxiliary heater 1 control circuit	For auxiliary heater 1 circuit tests. GO to Pinpoint Test B.
P1544	Auxiliary heater 2 circuit	• Auxiliary heater 2 relay circuit • Auxiliary heater 2 control circuit	For auxiliary heater 2 circuit tests. GO to Pinpoint Test C.
B2449	Auxiliary heater short circuit	• Auxiliary heater circuit: short circuit to ground	For auxiliary heater circuit tests. GO to Pinpoint Test A. GO to Pinpoint Test B. GO to Pinpoint Test C.
B2450	Auxiliary heater interrupted	• Auxiliary heater circuit: open circuit	For auxiliary heater circuit tests. GO to Pinpoint Test A. GO to Pinpoint Test B. GO to Pinpoint Test C.

Pinpoint Tests

CAUTION: When probing connectors to take measurements in the course of the pinpoint tests, use the adaptor kit, part number 3548-1358-00. Failure to follow this instruction may result in damage to the vehicle.

• NOTE: This section contains references to Parameter Identifiers (PIDs). Where the Jaguar approved diagnostic system is not available, a scantool may be used to access these PIDs, all of which give information, and some of which can be used to both read information and to activate components. The format of the information may vary, depending on the tool used.

• NOTE: When performing voltage or resistance tests, always use a digital multimeter (DMM) accurate to 3 decimal places, and with an up-to-date calibration certificate. When testing resistance, always take the resistance of the DMM leads into account.

• NOTE: Check and rectify basic faults before beginning diagnostic routines involving pinpoint tests.

• NOTE: If a DTC is detected, all DTCs must be cleared after the concern is repaired. Failure to clear all DTCs may cause driveability concerns.

PINPOINT TEST A : AUXILIARY HEATER RELAY 1	
TEST CONDITIONS	DETAILS/RESULTS/ACTIONS
A1: CHECK THE AUXILIARY HEATER RELAY CIRCUIT FOR SHORT CIRCUIT TO POWER	

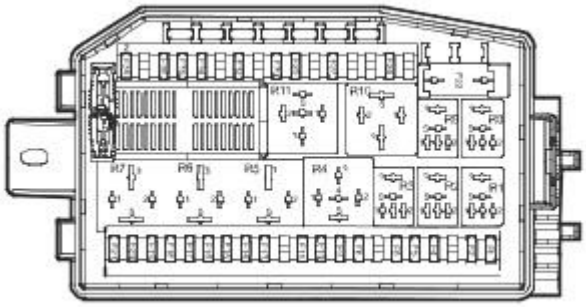

Auxiliary heater 1 fuse connector

Circuit	Pin
Auxiliary heater relay 1 output	01
Auxiliary heater 1 control	02

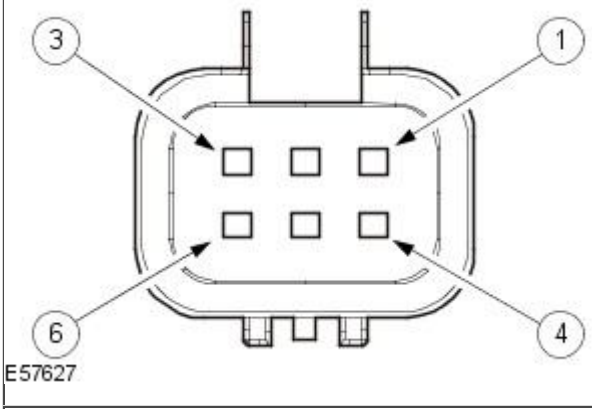

Auxiliary heater 1 connector

Circuit	Pin
Auxiliary heater relay 1 control	01

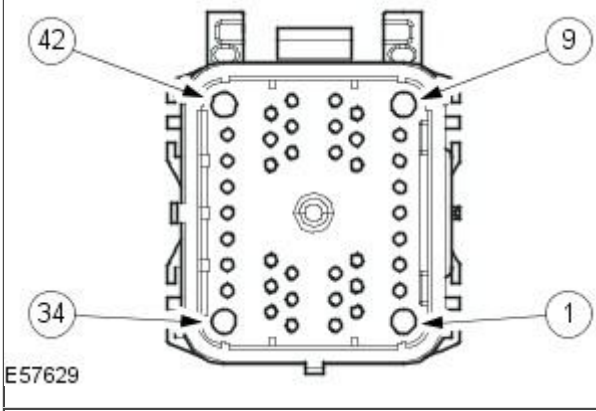

Junction box connector

Circuit	Pin
Auxiliary heater relay 1 control	38

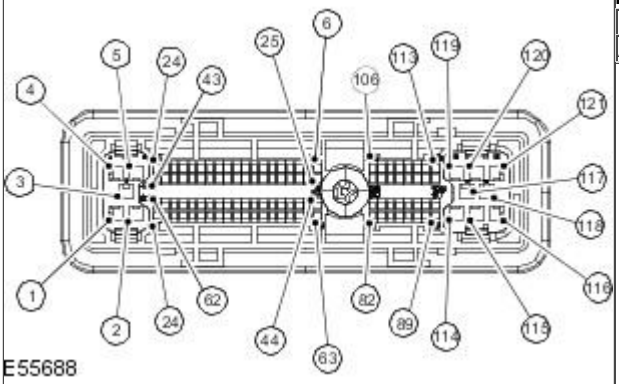

Engine control module connector

Circuit	Pin
Auxiliary heater 1 control	61

1	Key off.
2	Auxiliary heater fuse removed.
3	Measure the resistance between:

Auxiliary heater fuse connector	Vehicle battery
Auxiliary heater 1 control, pin 02	Positive post

Is the resistance greater than 10 ohms?

Yes

GO to A3.

No

GO to A2.

A2: CHECK WHETHER THE SHORT CIRCUIT TO POWER IS IN THE HARNESS OR THE AUXILIARY HEATER UNIT

1	Auxiliary heater 1 connector disconnected.
2	Measure the resistance between:

Auxiliary heater fuse connector	Vehicle battery
Auxiliary heater 1 control, pin 02	Positive post

Is the resistance greater than 10 ohms?

Yes

SUSPECT:- Auxiliary heater 1 assembly

No

REPAIR the short circuit. For additional information, refer to the wiring diagrams.

A3: CHECK THE AUXILIARY HEATER 1 CIRCUIT CONTINUITY

1. Auxiliary heater 1 connector disconnected.
2. Measure the resistance between:

Auxiliary heater fuse connector	Vehicle battery
Auxiliary heater 1 control, pin 02	Negative post

Is the resistance between 0.5 ohms and 10 ohms?

Yes

GO to A6.

No

GO to A4.

A4: CHECK THE AUXILIARY HEATER CONTROL CIRCUIT FOR SHORT CIRCUIT TO GROUND

1. Key off.
2. Auxiliary heater connector disconnected.
3. Key on, engine off.
4. Measure the resistance between:

Auxiliary heater 1 fuse connector	Vehicle battery
Auxiliary heater 1 control, pin 02	Negative post

Is the resistance greater than 10 ohms?

Yes

GO to A5.

No

REPAIR the short circuit. For additional information, refer to the wiring diagrams.

A5: CHECK THE AUXILIARY HEATER 1 CIRCUIT(S) FOR OPEN CIRCUIT IN THE HARNESS

1. Measure the resistance between:

Auxiliary heater 1 fuse connector	Auxiliary heater 1 assembly connector, harness side
Auxiliary heater 1 control, pin 02	Auxiliary heater 1 control, pin 01

Is the resistance less than 10 ohms?

Yes

SUSPECT:- Auxiliary heater 1 assembly- Auxiliary heater 1 ground

No

REPAIR the open circuit. For additional information, refer to the wiring diagrams.

A6: CHECK THE AUXILIARY HEATER 1 CONTROL LINE 'ON' STATE

1. Scan tool connected.
2. Access the ECM and control the auxiliary heater 1 relay PID.
3. Activate the auxiliary heater 1.
4. Measure the voltage between:

Auxiliary heater 1 fuse connector	Vehicle battery
Auxiliary heater relay 1 output, pin 01	Negative post

Is the voltage between 9 volts and 15 volts?

Yes

GO to A10.

No

GO to A7.

A7: CHECK THE AUXILIARY HEATER 1 CONTROL LINE FOR SHORT TO GROUND

1. Measure the resistance between:

Auxiliary heater 1 fuse connector	Vehicle battery
Auxiliary heater relay 1 output, pin 01	Negative post

Is the resistance greater than 10 ohms?

Yes

GO to A8.

No

REPAIR the short circuit. For additional information, refer to the wiring diagrams.

A8: CHECK THE ECM CONTROL LINE 'ON' STATE

1. Key off.
2. Junction box connector disconnected.
3. Key on, engine off.
4. Scan tool connected.
5. Access the ECM and control the auxiliary heater 1 relay PID.
6. Activate the auxiliary heater 1.
7. Measure the resistance between:

Junction box harness connector, component side	Vehicle battery
Auxiliary heater relay 1 control, Pin 38	Negative post

Is the resistance less than 10 ohms?

Yes

SUSPECT:- Short circuit to power in the harness between the junction box harness and the fuse box connectors- Open circuit in the harness between the junction box harness and the fuse box connectors- Fusebox assembly

No

GO to A9.

A9: CHECK THE ECM CONTROL LINE FOR SHORT CIRCUIT TO POWER

1. Measure the resistance between:

Junction box harness connector, component side	Vehicle battery
Auxiliary heater relay 1 control, Pin 38	Positive post

Is the resistance greater than 10 ohms?

Yes

GO to A14.

No

GO to A13.

A10: CHECK THE AUXILIARY HEATER 1 CONTROL LINE 'OFF' STATE

• NOTE: It is assumed the ignition is still on from the previous step, if not, please make sure the ignition is returned to the 'key on engine off' state.

1. Scan tool connected.
2. Access the ECM and control the auxiliary heater 1 relay PID.
3. De-activate the auxiliary heater 1.
4. Measure the resistance between:

Auxiliary heater 1 fuse connector	Vehicle battery
Auxiliary heater relay 1 output, pin 01	Positive post

Is the resistance greater than 10 ohms?

Yes

An intermittent fault may be present in the wiring harness. Visually check for chaffed wires or other physical damage to the harness. If no fault is found in the circuit, suspect the following component(s):- Fuse- ECM connector- Fusebox assembly- ECM

No

GO to A11.

A11: ELIMINATE THE ECM FROM THE POSSIBLE CAUSES

1. Key off.
2. ECM connector disconnected.
3. Key on, engine off.
4. Measure the resistance between:

Auxiliary heater 1 fuse connector	Vehicle battery
Auxiliary heater relay 1 output, pin 01	Negative post

Is the resistance greater than 10 ohms?

Yes

SUSPECT:- ECM

No

GO to A12.

A12: CHECK THE ECM CONTROL LINE FOR SHORT CIRCUIT TO GROUND

1. Measure the resistance between:

ECM connector, harness side	Vehicle battery
Engine coolant heater relay 1 control, pin 61	Negative post

Is the resistance greater than 10 ohms?

Yes

SUSPECT:- Fusebox assembly

No

REPAIR the short circuit. For additional information, refer to the wiring diagrams.

A13: CHECK WHETHER THE SHORT CIRCUIT TO POWER IS IN THE ECM HARNESS OR THE MODULE

1. Key off.
2. ECM connector disconnected.
3. Key on, engine off.
4. Measure the resistance between:

Junction box connector, harness side	Vehicle battery
Engine coolant heater relay 1 control, pin 38	Positive post

Is the resistance greater than 10 ohms?

Yes

SUSPECT:- ECM

No

REPAIR the short circuit. For additional information, refer to the wiring diagrams.

A14: CHECK THE ECM CONTROL LINE FOR CONTINUITY

1. Key off.
2. ECM connector disconnected.
3. Measure the resistance between:

Junction box connector, harness side	ECM connector, harness side
Auxiliary heater relay 1 control, pin 38	Auxiliary heater relay 1 control, pin 61

Is the resistance less than 10 ohms?

Yes

SUSPECT:- ECM connector- ECM

No

REPAIR the open circuit, For additional information, refer to the wiring diagrams.

PINPOINT TEST B : AUXILIARY HEATER RELAY 2

TEST CONDITIONS	DETAILS/RESULTS/ACTIONS

B1: CHECK THE AUXILIARY HEATER 2 CONTROL LINE 'ON' STATE

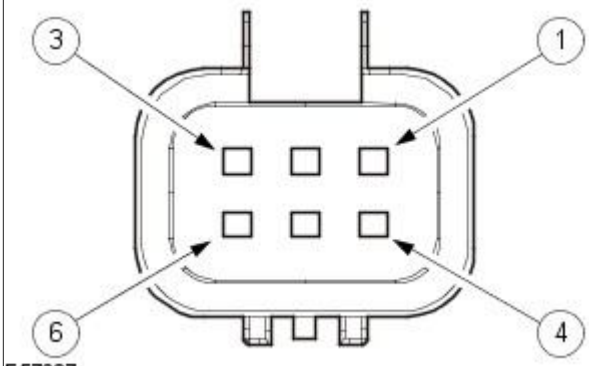

Auxiliary heater connector

Circuit	Pins
Auxiliary heater control	03/05

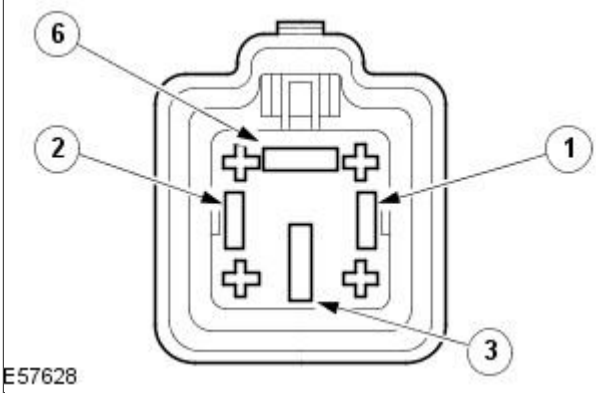

Auxiliary heater relay 2 connector

Circuit	Pin
Auxiliary heater relay 2 control	02
Ignition supply	01
Permanent 12 volt supply	03
Auxiliary heater 2 control	05

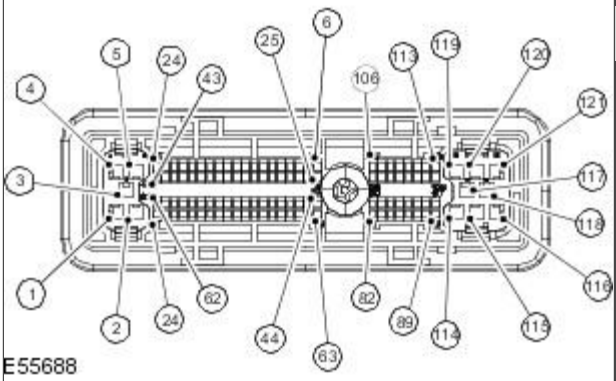

Engine control module connector

Circuit	Pin
Auxiliary heater relay 2 control	62

1. Key off.
2. Auxiliary heater connector disconnected.
3. Key on, engine off.
4. Scan tool connected.
5. Access the ECM and control the auxiliary heater relay 2 PID.
6. Activate the auxiliary heater 2.
7. Measure the voltage between:

Auxiliary heater connector, harness side	Vehicle battery
Auxiliary heater 2 control, pins 03 and 05	Negative post

Is the voltage between 9 volts and 15 volts?

Yes

GO to B7.

No

GO to B2.

B2: CHECK THE AUXILIARY HEATER 2 CONTROL LINE FOR SHORT CIRCUIT TO GROUND

1. Key off.
2. Auxiliary heater 2 relay connector disconnected.
3. Key on, engine off.
4. Measure the resistance between:

Auxiliary heater connector, harness side	Vehicle battery
Auxiliary heater 2 control, pins 03 and 05	Negative post

Is the resistance greater than 10 ohms?

Yes

GO to B3.

No

REPAIR the short circuit. For additional information, refer to the wiring diagrams.

B3: CHECK THE AUXILIARY HEATER 2 CONTROL LINE FOR CONTINUITY

1. Measure the resistance between:

Auxiliary heater connector, harness side	Auxiliary heater 2 relay connector, harness side
Auxiliary heater 2 control, pins 03 and 05	Auxiliary heater 2 control, pin 05

Is the resistance less than 10 ohms?

Yes

GO to B4.

No

REPAIR the open circuit. For additional information, refer to the wiring diagrams.

B4: CHECK THE SUPPLIES TO THE AUXILIARY HEATER 2 RELAY

1. Key off.
2. Measure the voltage between:

Auxiliary heater 2 relay connector, harness side	Vehicle battery
Permanent 12 volt supply, pin 03	Negative post

3. Key on, engine off.
4. Measure the voltage between:

Auxiliary heater 2 relay connector, harness side	Vehicle battery
Ignition supply, pin 01	Negative post

Are the voltages between 9 volts and 15 volts?

Yes

GO to B5.

No

NO supply to the auxiliary heater 2 circuit. For additional information, refer to the wiring diagrams.

B5: CHECK THE ECM CONTROL LINE 'ON' STATE

1. Scan tool connected.
2. Access the ECM and control the auxiliary heater relay 2 PID.
3. Activate the auxiliary heater 2.
4. Measure the resistance between:

Auxiliary heater 2 relay connector, harness side	Vehicle battery
Auxiliary heater relay 2 control, pin 02	Negative post

Is the resistance less than 10 ohms?

Yes

SUSPECT:- Auxiliary heater 2 relay connector- Auxiliary heater 2 relay

No

GO to B6.

B6: CHECK THE ECM CONTROL LINE FOR SHORT CIRCUIT TO POWER

1. Measure the resistance between:

Auxiliary heater 2 relay connector, harness side	Vehicle battery
Auxiliary heater relay 2 control, pin 02	Positive post

Is the resistance greater than 10 ohms?

Yes

GO to B12.

No

GO to B11.

B7: CHECK THE AUXILIARY HEATER 2 CONTROL LINE 'OFF' STATE

• NOTE: It is assumed the ignition is still on from the previous step, if not, please make sure the ignition is returned to the 'key on engine off' state.

1. Scan tool connected.
2. Access the ECM and control the auxiliary heater heater relay 2 PID.
3. De-activate the auxiliary heater 2.
4. Measure the resistance between:

Auxiliary heater connector, harness side	Vehicle battery
Auxiliary heater 2 control, pins 03 and 05	Positive post

Is the resistance greater than 10 ohms?

Yes

An intermittent fault may be present in the wiring harness. Visually check for chaffed wires or other physical damage to the harness. If no fault is found in the circuit, suspect the following component(s):- Auxiliary heater ground circuit- Auxiliary heater

No

GO to B8.

B8: CHECK THE AUXILIARY HEATER 2 CIRCUIT FOR SHORT CIRCUIT TO POWER IN THE HARNESS

1. Key off.
2. Auxiliary heater relay 2 connector disconnected.
3. Key on, engine off.
4. Measure the resistance between:

Auxiliary heater relay 2 connector, harness side	Vehicle battery
Auxiliary heater 2 control, pin 05	Positive post

Is the resistance greater than 10 ohms?

Yes

GO to B9.

No

REPAIR the short circuit. For additional information, refer to the wiring diagrams.

B9: CHECK THE ECM CONTROL LINE FOR SHORT CIRCUIT TO GROUND

1. Measure the resistance between:

Auxiliary heater relay 2 connector, harness side	Vehicle battery
Auxiliary heater 2 control, pin 02	Negative post

Is the resistance greater than 10 ohms?

Yes

SUSPECT:- Auxiliary heater relay 2

No

GO to B10.

B10: CHECK WHETHER THE SHORT CIRCUIT TO GROUND IS IN THE ECM HARNESS OR THE MODULE

1. Key off.
2. ECM connector disconnected.

	3 Key on, engine off. 4 Measure the resistance between: **Auxiliary heater relay 2 connector, harness side** / **Vehicle battery** Auxiliary heater 2 control, pin 02 / Negative post
	Is the resistance greater than 10 ohms? **Yes** SUSPECT:- ECM **No** REPAIR the short circuit. For additional information, refer to the wiring diagrams.
B11: CHECK WHETHER THE SHORT CIRCUIT TO POWER IS IN THE ECM HARNESS OR THE MODULE	
	1 Key off. 2 ECM connector disconnected. 3 Key on, engine off. 4 Measure the resistance between: **Auxiliary heater relay 2 connector, harness side** / **Vehicle battery** Auxiliary heater 2 control, pin 02 / Positive post
	Is the resistance greater than 10 ohms? **Yes** SUSPECT:- ECM **No** REPAIR the short circuit. For additional information, refer to the wiring diagrams.
B12: CHECK THE ECM CONTROL LINE FOR CONTINUITY	
	1 Key off. 2 ECM connector disconnected. 3 Measure the resistance between: **Auxiliary heater relay 2 connector, harness side** / **ECM connector, harness side** Auxiliary heater 2 control, pin 02 / Auxiliary heater 2 control, pin 62
	Is the resistance less than 10 ohms? **Yes** SUSPECT:- ECM connector- ECM **No** REPAIR the open circuit. For additional information, refer to the wiring diagrams.

PINPOINT TEST C : AUXILIARY HEATER CIRCUIT TESTS

TEST CONDITIONS	DETAILS/RESULTS/ACTIONS
C1: CHECK THE AUXILIARY HEATER CIRCUITS FOR SHORT CIRCUIT TO POWER	
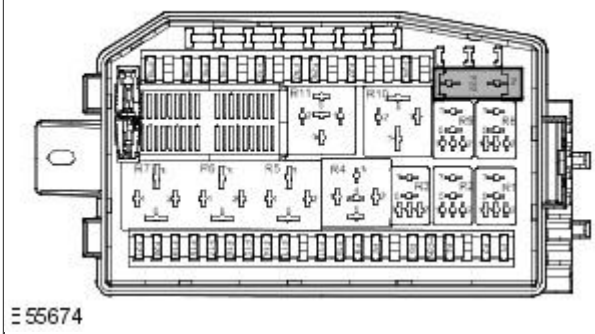	**Auxiliary heater fuse connector** **Circuit** / **Pin** Auxiliary heater relay output / 01 Auxiliary heater control / 02
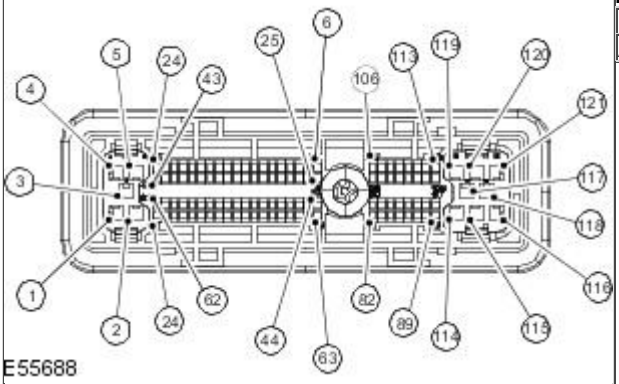	**Engine control module** **Circuit** / **Pin** Auxiliary heater control / 20

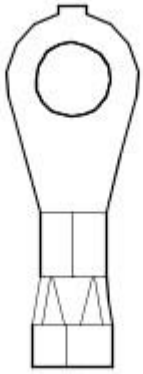

E55678

Auxiliary heater connector

Circuit	Pin
Auxiliary heater control	01

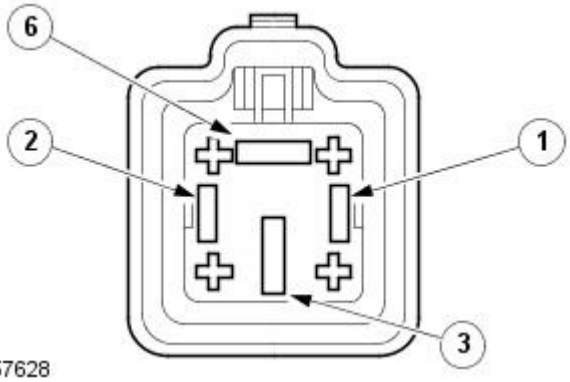

E57628

Auxiliary heater relay connector

Circuit	Pin
Auxiliary heater relay control	02
Permanent 12 volt supply	03
ECM relay controlled 12 volt supply	01
Auxiliary heater relay output	05

1 Key off.
2 Auxiliary heater fuse removed.
3 Key on, engine off.
4 Measure the resistance between:

Auxiliary heater fuse connector, harness side	Vehicle battery
Auxiliary heater control, pin 02	Positive post

Is the resistance greater than 10 ohms?
Yes
GO to C3.
No
GO to C2.

C2: CHECK WHETHER THE SHORT CIRCUIT TO POWER IS IN THE HARNESS OR THE AUXILIARY HEATER

1 Auxiliary heater connector disconnected.
2 Measure the resistance between:

Auxiliary heater fuse connector, harness side	Vehicle battery
Auxiliary heater control, pin 02	Positive post

Is the resistance greater than 10 ohms?
Yes
SUSPECT:- Auxiliary heater assembly
No
REPAIR the short circuit. For additional information, refer to the wiring diagrams.

C3: CHECK THE AUXILIARY HEATER CIRCUIT CONTINUITY

1 Measure the resistance between:

Auxiliary heater fuse connector, harness side	Vehicle battery
Auxiliary heater control, pin 02	Negative post

Is the resistance between 0.5 ohms and 10 ohms?
Yes
GO to C6.
No
GO to C4.

C4: CHECK THE AUXILIARY HEATER CIRCUIT FOR SHORT CIRCUIT TO GROUND

1 Auxiliary heater connector disconnected.
2 Measure the resistance between:

Auxiliary heater fuse connector, harness side	Vehicle battery
Auxiliary heater control, pin 02	Negative post

Is the resistance greater than 10 ohms?
Yes
GO to C5.
No
REPAIR the short circuit. For additional information, refer to the wiring diagrams.

C5: CHECK THE AUXILIARY HEATER CIRCUIT(S) FOR OPEN CIRCUIT IN THE HARNESS

1 Measure the resistance between:

Auxiliary heater connector, harness side	Auxiliary heater fuse connector, harness side
Auxiliary heater control, pin 01	Auxiliary heater control, pin 02

Is the resistance less than 10 ohms?
Yes
SUSPECT:- Auxiliary heater assembly- Auxiliary heater assembly ground
No
REPAIR the open circuit. For additional information, refer to the wiring

diagrams.

C6: CHECK THE AUXILIARY HEATER CONTROL LINE 'ON' STATE

1. Scan tool connected.
2. Access the ECM and control the auxiliary heater control PID.
3. Activate the auxiliary heater.
4. Measure the voltage between:

Auxiliary heater fuse connector, harness side	Vehicle battery
Glow plug relay output, pin 01	Negative post

Is the voltage between 9 volts and 15 volts?

Yes

GO to C12.

No

GO to C7.

C7: CHECK THE AUXILIARY HEATER CONTROL LINE FOR SHORT CIRCUIT TO GROUND

1. Key off.
2. Auxiliary heater relay connector disconnected.
3. Key on, engine off.
4. Measure the resistance between:

Auxiliary heater fuse connector, harness side	Vehicle battery
Auxiliary heater relay output, pin 01	Negative post

Is the resistance greater than 10 ohms?

Yes

GO to C8.

No

INSTALL a new front power distribution box.

C8: CHECK THE AUXILIARY HEATER CONTROL LINE FOR CONTINUITY

1. Measure the resistance between:

Auxiliary heater fuse connector, harness side	Auxiliary heater relay connector, harness side
Auxiliary heater relay output, pin 01	Auxiliary heater relay output, pin 05

Is the resistance less than 10 ohms?

Yes

GO to C9.

No

REPAIR the open circuit. For additional information, refer to the wiring diagrams.

C9: CHECK THE SUPPLIES TO THE AUXILIARY HEATER RELAY

1. Measure the voltage between:

Auxiliary heater relay connector, harness side	Vehicle battery
ECM relay controlled 12 volt supply, pin 01	Negative post
Permanent 12 volt supply, pin 03	Negative post

Are the voltages between 9 volts and 15 volts?

Yes

GO to C10.

No

REPAIR the supply to the auxiliary heater. For additional information, refer to the wiring diagrams.

C10: CHECK THE ECM CONTROL LINE 'ON' STATE

1. Scan tool connected.
2. Access the ECM and control the auxiliary heater PID.
3. Activate the auxiliary heater.
4. Measure the resistance between:

Auxiliary heater relay connector, harness side	Vehicle battery
Auxiliary heater relay control, pin 02	Negative post

Is the resistance less than 10 ohms?

Yes

SUSPECT:- Auxiliary heater connector- Auxiliary heater assembly

No

GO to C11.

C11: CHECK THE ECM CONTROL LINE FOR SHORT CIRCUIT TO POWER

1. Measure the resistance between:

Auxiliary heater relay connector, harness side	Vehicle battery
Auxiliary heater relay control, pin 02	Negative post

Is the resistance greater than 10 ohms?

Yes

GO to C17.

No

GO to C16.

C12: CHECK THE AUXILIARY HEATER CONTROL LINE 'OFF' STATE

1. Scan tool connected.
2. Access the ECM and control the auxiliary heater PID.
3. De-activate the auxiliary heater.
4. Measure the resistance between:

Auxiliary heater fuse connector, harness side	Vehicle battery
Auxiliary heater relay output, pin 01	Positive post

Is the resistance greater than 10 ohms?

Yes

An intermittent fault may be present in the wiring harness. Visually check for chaffed wires or other physical damage to the harness. If no fault is found in the circuit, suspect the following component(s):- Auxiliary heater fuse connector- Auxiliary heater fuse

No

GO to C13.

C13: CHECK THE AUXILIARY HEATER CIRCUIT FOR SHORT CIRCUIT TO POWER IN THE HARNESS

1 Key off.
2 Auxiliary heater relay connector disconnected.
3 Key on, engine off.
4 Measure the resistance between:

Auxiliary heater fuse connector, harness side	Vehicle battery
Auxiliary heater relay output, pin 01	Positive post

Is the resistance greater than 10 ohms?
Yes
GO to C14.
No
INSTALL a new front power distribution box.

C14: CHECK THE ECM CONTROL LINE FOR SHORT CIRCUIT TO GROUND

1 Measure the resistance between:

Auxiliary heater relay connector, harness side	Vehicle battery
Auxiliary heater relay control, pin 02	Negative post

Is the resistance greater than 10 ohms?
Yes
SUSPECT:- Auxiliary heater relay
No
GO to C15.

C15: CHECK WHETHER THE SHORT CIRCUIT TO GROUND IS IN THE ECM HARNESS OR THE MODULE

1 Key off.
2 ECM connector disconnected.
3 Key on, engine off.
4 Measure the resistance between:

Auxiliary heater relay connector, harness side	Vehicle battery
Auxiliary heater relay control, pin 02	Negative post

Is the resistance greater than 10 ohms?
Yes
SUSPECT:- ECM
No
REPAIR the short circuit. For additional information, refer to the wiring diagrams.

C16: CHECK WHETHER THE SHORT CIRCUIT TO POWER IS IN THE ECM HARNESS OR THE MODULE

1 Key off.
2 ECM connector disconnected.
3 Key on, engine off.
4 Measure the resistance between:

Auxiliary heater relay connector, harness side	Vehicle battery
Auxiliary heater relay control, pin 02	Positive post

Is the resistance greater than 10 ohms?
Yes
SUSPECT:- ECM
No
REPAIR the short circuit. For additional information, refer to the wiring diagrams.

C17: CHECK THE ECM CONTROL LINE FOR CONTINUITY

1 Key off.
2 ECM connector disconnected.
3 Measure the resistance between:

Auxiliary heater relay connector, harness side	ECM connector, harness side
Auxiliary heater relay control, pin 02	Auxiliary heater control, pin 20

Is the resistance less than 10 ohms?
Yes
SUSPECT:- ECM- ECM connector
No
REPAIR the open circuit. For additional information, refer to the wiring diagrams.

Auxiliary Heating - Fuel Fired Booster Heater

Diagnosis and Testing

Principle of operation

The fuel fired booster heater is available as an option in place of the electric version, and is likely to be more common in extreme climates.

The system performs the same function as the electric booster heater, and functions in the following way:

Automatic activation occurs if:

- The ambient temperature is below five degrees C (41 degrees F)
- The coolant temperature is below 75 degrees C (167 degrees F)
- The engine is running
- The generator is charging

When these operating conditions are detected by the control module, the glow plug preheats the heater chamber and the fuel fired heater pump supplies fuel.

The fuel is ignited and the heater continues to operate until:

The system deactivates automatically when the coolant temperature reaches 85 degrees C (185 degrees F), or when a malfunction is detected.

The system will shut down if:

- There is no ignition for the fuel injected by the fuel fired heater pump within 90 seconds
- The flame is extinguished during operation and a new ignition attempt fails
- The internal sensor indicates an overheat condition
- The operating voltage falls below 9 volts or above 15 volts
- A circuit fault is detected
- The air flow is blocked

Inspection and Verification

1. **1.** Verify the customer concern.
2. **2.** Visually inspect for obvious signs of mechanical or electrical damage.

Mechanical	Electrical
• Fuel supply • Coolant level • Pipework • Heater unit for damage, etc • Blockages/Restrictions to the air flow	• Fuses • Connectors • Harness • Control module • Charging system • Fuel fired heater pump

3. **3.** If an obvious cause for an observed or reported concern is found, correct the cause (if possible) before proceeding to the next step
4. **4.** If the cause is not visually evident, verify the symptom and refer to the symptom chart.

Diagnostic Trouble Code (DTC) index

DTC	Description	Possible causes	Action
P1937	Fuel fired heater control circuit	• Fuel fired heater circuit(s): open circuit • Fuel fired heater circuit(s): short circuit to power • Fuel fired heater circuit(s): short circuit to ground	For fuel fired heater circuit tests, GO to Pinpoint Test A.

Pinpoint Tests

CAUTION: When probing connectors to take measurements in the course of the pinpoint tests, use the adaptor kit, part number 3548-1358-00. Failure to follow this instruction may result in damage to the vehicle.

• NOTE: This section contains references to Parameter Identifiers (PIDs). Where the Jaguar approved diagnostic system is not available, a scantool may be used to access these PIDs, all of which give information, and some of which can be used to both read information and to activate components. The format of the information may vary, depending on the tool used.

• NOTE: When performing voltage or resistance tests, always use a digital multimeter (DMM) accurate to 3 decimal places, and with an up-to-date calibration certificate. When testing resistance, always take the resistance of the DMM leads into account.

• NOTE: Check and rectify basic faults before beginning diagnostic routines involving pinpoint tests.

• NOTE: If a DTC is detected, all DTCs must be cleared after the concern is repaired. Failure to clear all DTCs may cause driveability concerns.

PINPOINT TEST A : FUEL FIRED HEATER CONTROL CIRCUIT	
TEST CONDITIONS	DETAILS/RESULTS/ACTIONS
A1: CHECK THE FUEL FIRED HEATER CONTROL RELAY SUPPLY	

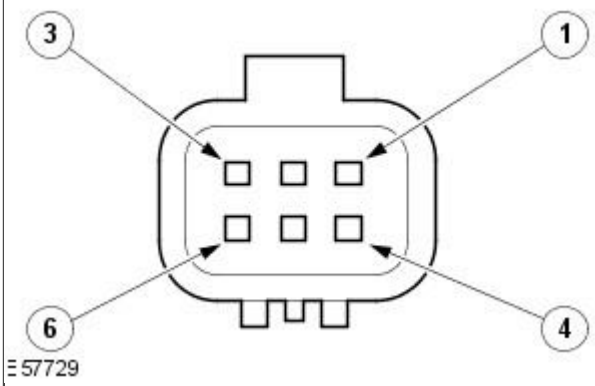

Fuel fired heater module connector

Circuit	Pin
Fuel fired heater module ground	02
Fuel fired heater module ignition supply	04
Fuel fired heater module power	01
Fuel fired heater module signal	05

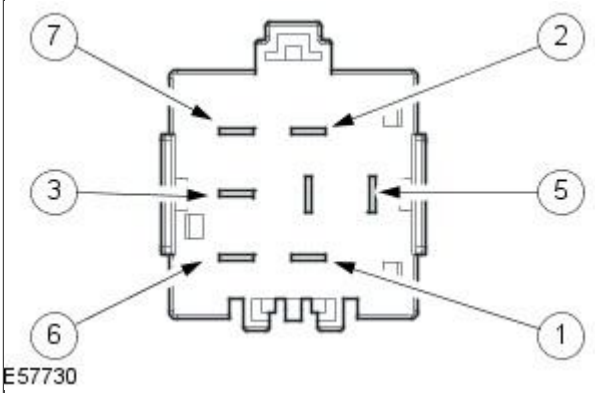

Fuel fired heater module relay connector

Circuit	Pin
Fuel fired heater module signal	05
Fuel fired heater module relay signal	01
Fuel fired heater module relay power	03

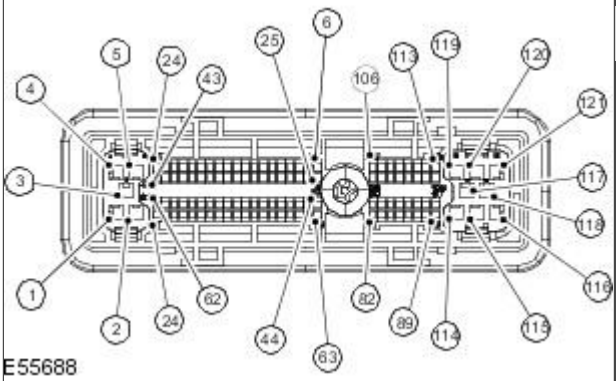

Engine Control Module (ECM) connector

Circuit	Pin
Fuel fired heater module relay signal	80

1. Fuel fired heater relay connector disconnected.
2. Key on, engine off.
3. Measure the voltage between:

Fuel fired heater relay connector, harness side	Vehicle battery
Fuel fired heater module relay power, pin 03	Negative post

Is the voltage between 9 volts and 15 volts?

Yes

GO to A2.

No

NO supply to the fuel fired heater module relay. REPAIR the circuit as necessary. For additional information, refer to the wiring diagrams.

A2: CHECK THE CONTROL LINE FOR SHORT CIRCUIT TO GROUND

1. Measure the resistance between:

Fuel fired heater relay connector, harness side	Vehicle battery
Fuel fired heater module relay signal, pin 01	Negative post

Is the resistance greater than 100 Kohms?

Yes

GO to A4.

No

GO to A3.

A3: CHECK WHETHER THE SHORT CIRCUIT TO GROUND IS IN THE FUEL FIRED HEATER MODULE RELAY HARNESS OR CONTROL MODULE

1. Key off.
2. ECM connector disconnected.
3. Key on, engine off.
4. Measure the resistance between:

Fuel fired heater relay connector, harness side	Vehicle battery
Fuel fired heater module relay signal, pin 01	Negative post

Is the resistance greater than 100 Kohms?

Yes

SUSPECT:- ECM

No

REPAIR the short circuit. For additional information, refer to the wiring diagrams.

A4: CHECK THE CONTROL LINE FOR SHORT CIRCUIT TO POWER

1 Measure the resistance between:

Fuel fired heater relay connector, harness side	Vehicle battery
Fuel fired heater module relay signal, pin 01	Positive post

Is the resistance greater than 100 Kohms?

Yes

GO to A6.

No

GO to A5.

A5: CHECK WHETHER THE SHORT CIRCUIT TO POWER IS IN THE FUEL FIRED HEATER MODULE RELAY HARNESS OR CONTROL MODULE

1 Key off.

2 ECM connector disconnected.

3 Key on, engine off.

4 Measure the resistance between:

Fuel fired heater relay connector, harness side	Vehicle battery
Fuel fired heater module relay signal, pin 01	Positive post

Is the resistance greater than 100 Kohms?

Yes

SUSPECT:- ECM

No

REPAIR the short circuit. For additional information, refer to the wiring diagrams.

A6: CHECK THE FUEL FIRED HEATER MODULE SIGNAL LINE FOR SHORT CIRCUIT TO GROUND

1 Measure the resistance between:

Fuel fired heater relay connector, harness side	Vehicle battery
Fuel fired heater module signal, pin 05	Negative post

Is the resistance greater than 100 Kohms?

Yes

GO to A8.

No

GO to A7.

A7: CHECK WHETHER THE SHORT CIRCUIT TO GROUND IS IN THE HARNESS OR THE FUEL FIRED HEATER ASSEMBLY

1 Key off.

2 Fuel fired heater assembly connector disconnected.

3 Key on, engine off.

4 Measure the resistance between:

Fuel fired heater relay connector, harness side	Vehicle battery
Fuel fired heater module signal, pin 05	Negative post

Is the resistance greater than 100 Kohms?

Yes

INSTALL a new fuel fired heater assembly.

No

REPAIR the short circuit. For additional information, refer to the wiring diagrams.

A8: CHECK THE FUEL FIRED HEATER MODULE SIGNAL LINE FOR SHORT CIRCUIT TO POWER

1 Measure the resistance between:

Fuel fired heater relay connector, harness side	Vehicle battery
Fuel fired heater module signal, pin 05	Negative post

Is the resistance greater than 100 Kohms?

Yes

GO to A10.

No

GO to A9.

A9: CHECK WHETHER THE SHORT CIRCUIT TO POWER IS IN THE HARNESS OR THE FUEL FIRED HEATER ASSEMBLY

1 Key off.

2 Fuel fired heater assembly connector disconnected.

3 Key on, engine off.

4 Measure the resistance between:

Fuel fired heater relay connector, harness side	Vehicle battery
Fuel fired heater module signal, pin 05	Positive post

Is the resistance greater than 100 Kohms?

Yes

INSTALL a new fuel fired heater assembly.

No

REPAIR the short circuit. For additional information, refer to the wiring diagrams.

A10: CHECK THE FUEL FIRED HEATER SIGNAL LINE FOR OPEN CIRCUIT

1 Key off.

2 Fuel fired heater assembly connector disconnected.

3 Key on, engine off.

4 Measure the resistance between:

Fuel fired heater relay connector, harness side	Fuel fired heater connector, harness side
Fuel fired heater module signal, pin 05	Fuel fired heater module signal, pin 05

Is the resistance less than 10 ohms?

Yes

GO to A11.

No

REPAIR the open circuit. For additional information, refer to the wiring diagrams.

A11: CHECK THE POWER TO THE FUEL FIRED HEATER MODULE

1 Measure the voltage between:

Fuel fired heater connector, harness side	Vehicle battery
Fuel fired heater module power, pin 01	Negative post

Is the voltage between 9 volts and 15 volts?

Yes

GO to A12.

No

NO supply to the fuel fired heater module circuit. REPAIR the circuit as necessary. For additional information, refer to the wiring diagrams.

A12: CHECK THE IGNITION SUPPLY TO THE FUEL FIRED HEATER MODULE

1. Key on, engine off.
2. Measure the voltage between:

Fuel fired heater connector, harness side	Vehicle battery
Fuel fired heater module ignition supply, pin 04	Negative post

Is the voltage between 9 volts and 15 volts?

Yes

GO to A13.

No

NO ignition supply to the fuel fired heater module circuit. REPAIR the circuit as necessary. For additional information, refer to the wiring diagrams.

A13: CHECK THE FUEL FIRED HEATER MODULE GROUND CIRCUIT

1. Measure the resistance between:

Fuel fired heater connector, harness side	Vehicle battery
Fuel fired heater module ground, pin 02	Negative post

Is the resistance less than 10 ohms?

Yes

GO to A14.

No

REPAIR the open circuit. For additional information, refer to the wiring diagrams.

A14: CHECK THE CONTROL LINE FOR CONTINUITY

1. ECM connector disconnected.
2. Measure the resistance between:

Fuel fired heater relay connector, harness side	ECM connector, harness side
Fuel fired heater module relay signal, pin 01	Fuel fired heater module relay signal, pin 80

Is the resistance less than 10 ohms?

Yes

An intermittent fault may be present in the wiring harness. Visually check for chaffed wires or other physical damage to the harness. If no fault is found in the circuit, suspect the following component(s):- Fuel fired heater relay- Fuel fired heater assembly- ECM

No

REPAIR the open circuit. For additional information, refer to the wiring diagrams.

Auxiliary Heating - Electric Booster Heater

Removal and Installation

Removal

1. Remove the air deflector.
   For additional information, refer to: Air Deflector - 2.0L Duratorq-TDCi/2.2L Duratorq-TDCi (110kW/150PS) - Puma (501-02 Front End Body Panels, Removal and Installation).
2. Detach the wiring harness.

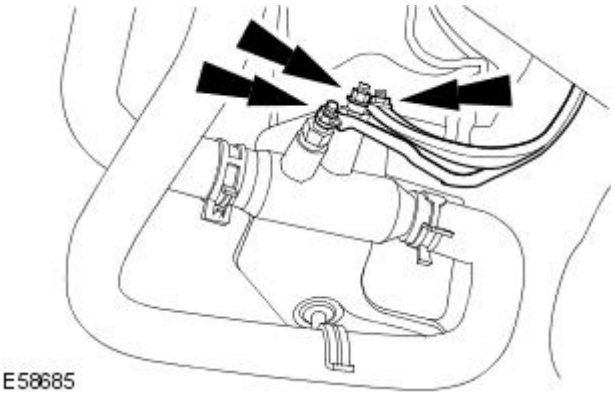

3. Detach the coolant hose.

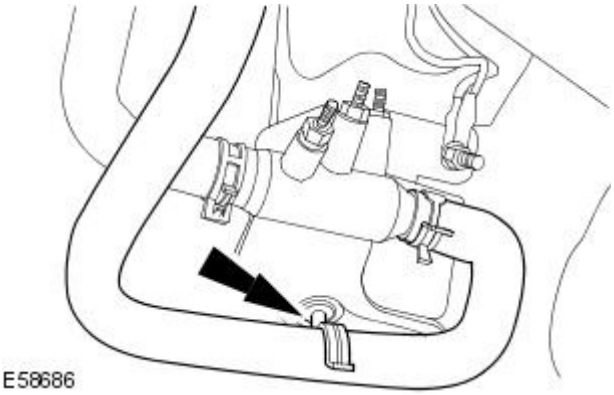

4. NOTE: Clamp the hoses to minimize coolant loss.

   Disconnect the coolant hoses.

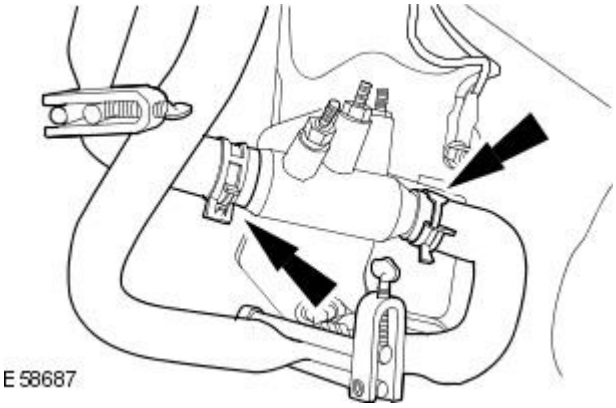

5. Remove the electric booster heater.
   - Detach the wiring harness.

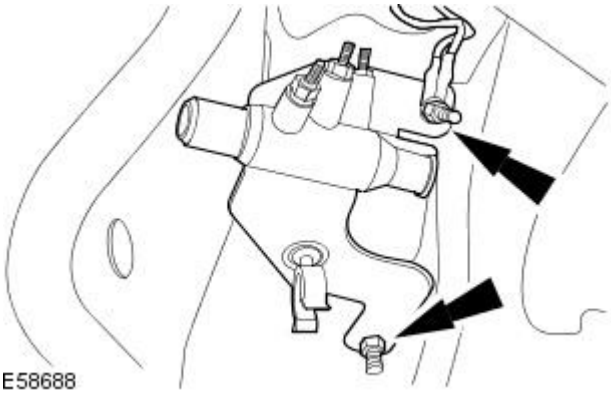

Installation

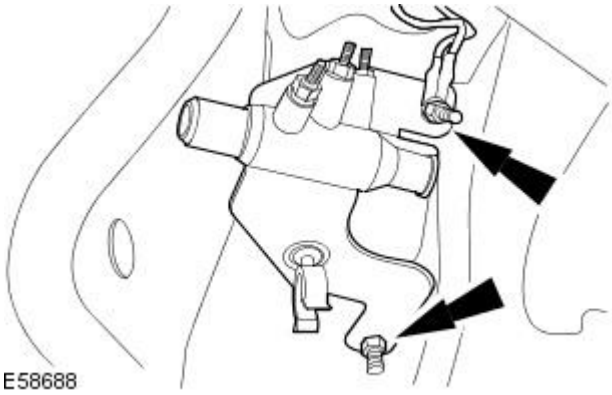

1. To install, reverse the removal procedure.

- Tighten to 10 Nm.

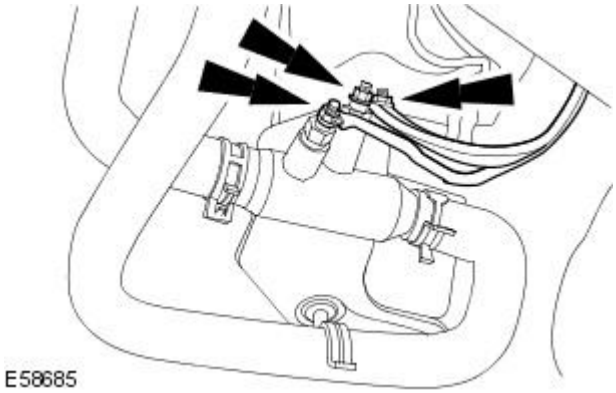

2. Tighten to 4 Nm.

3. Check and top up the coolant if necessary.

Auxiliary Heating - Fuel Fired Booster Heater

Removal and Installation

Removal

1. Remove the air deflector.
   For additional information, refer to: Air Deflector - 2.0L Duratorq-TDCi/2.2L Duratorq-TDCi (110kW/150PS) - Puma (501-02 Front End Body Panels, Removal and Installation).
2. Disconnect the fuel fired booster heater electrical connector.

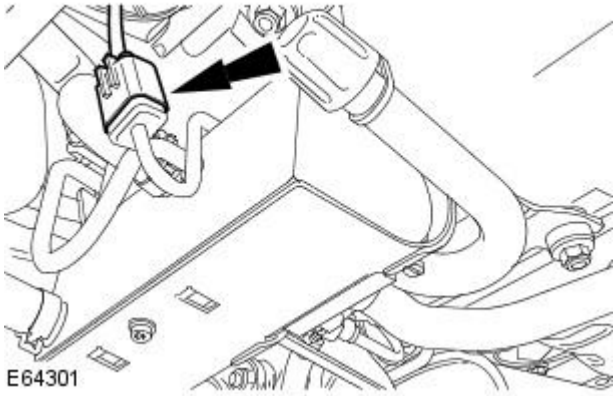

3. Disconnect the fuel fired booster heater fuel line.

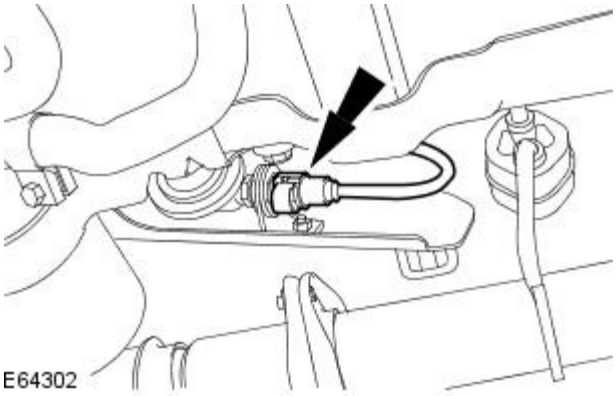

4. Detach the coolant hose.

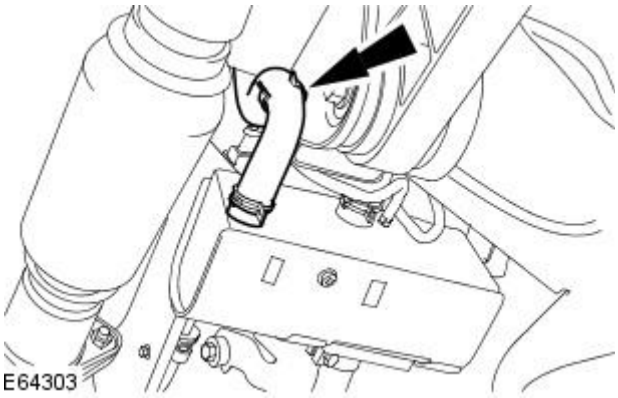

5. NOTE: Clamp the hose to minimize coolant loss.

   Disconnect the coolant hose.

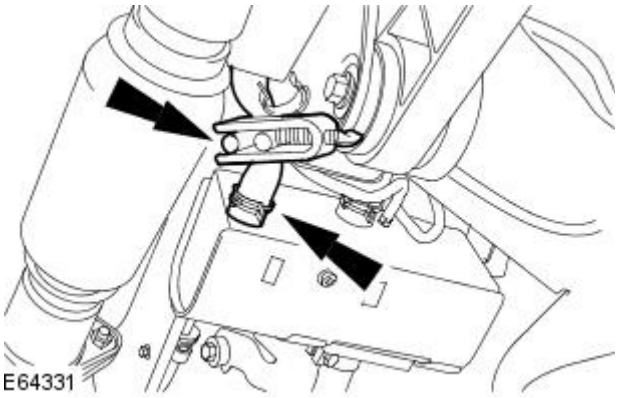

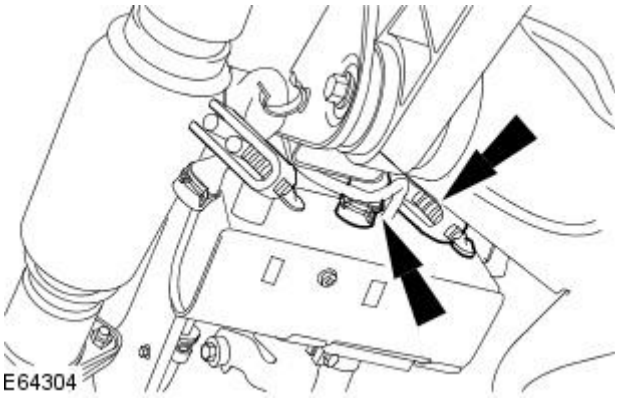

6. NOTE: Clamp the hose to minimize coolant loss.

Disconnect the coolant hose.

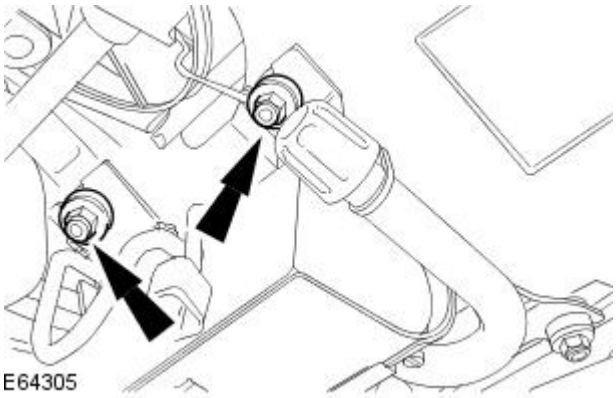

7. Remove the retaining bolts.

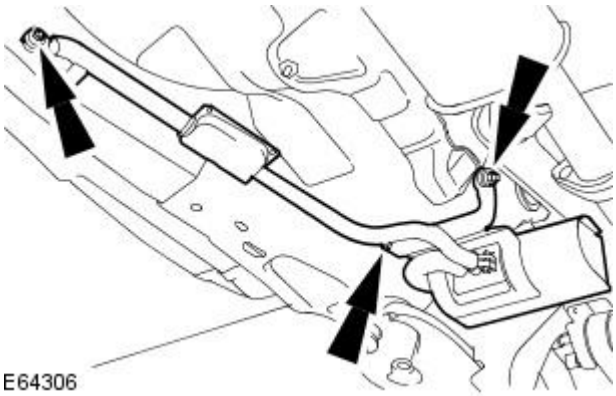

8. Remove the fuel fired booster heater.

- Remove the retaining bolts.

Installation

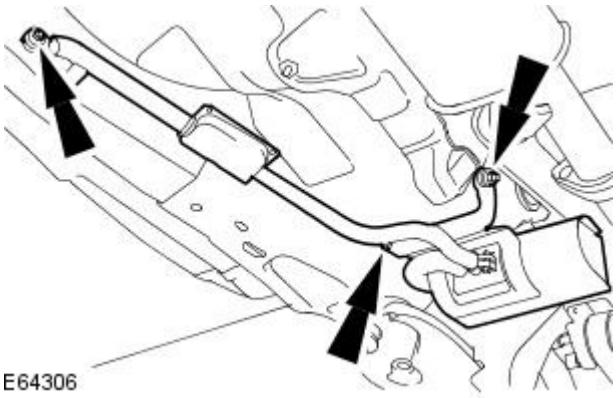

1. Install the fuel fired booster heater.

- Install the retaining bolts.

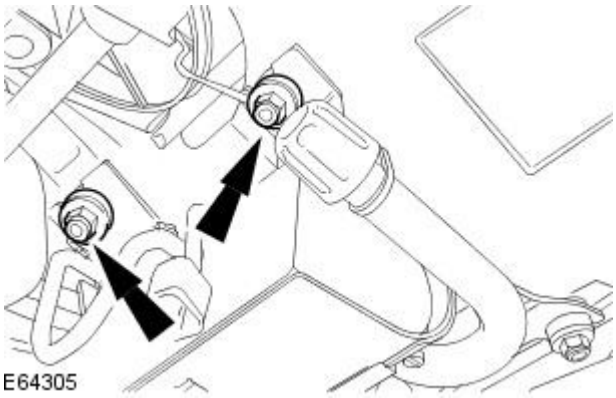

2. Install the retaining bolts.

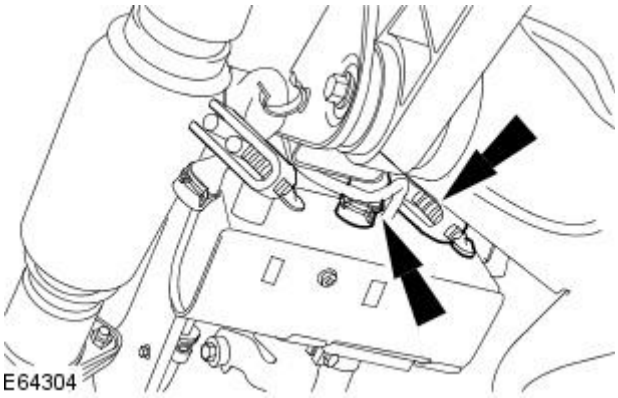

3. Connect the coolant hose.

- Remove the hose clamp.

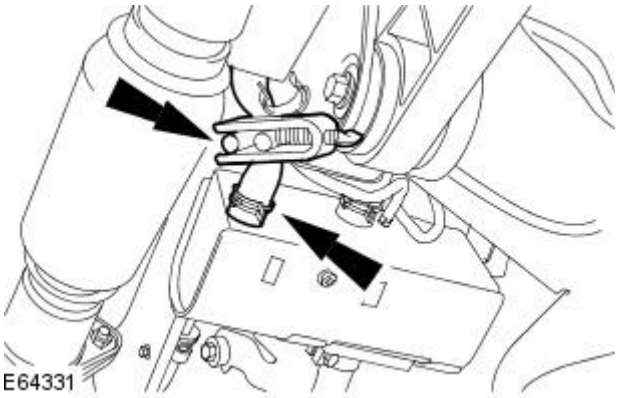

4. Connect the coolant hose.

- Remove the hose clamp.

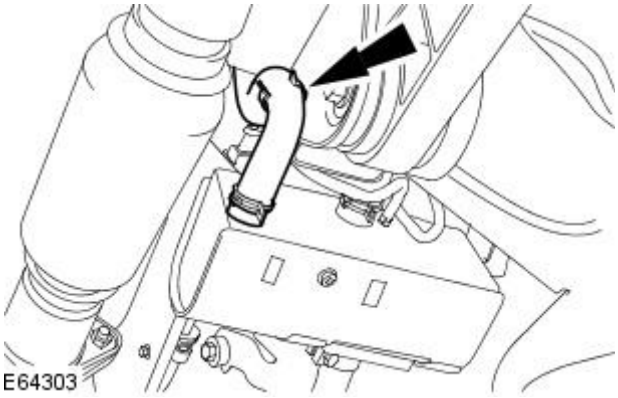

5. Attach the coolant hose.

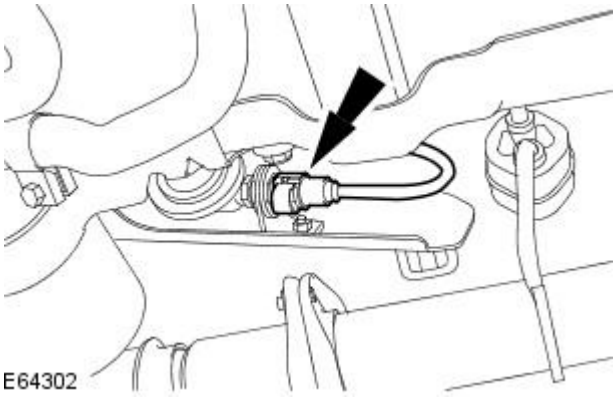

6. Connect the fuel fired booster heater fuel line.

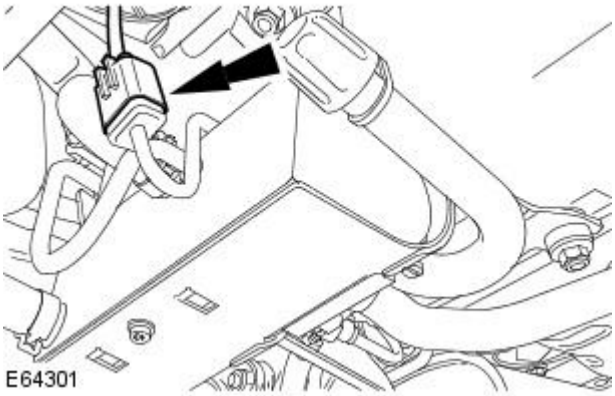

7. Connect the fuel fired booster heater electrical connector.

8. Install the air deflector.
   For additional information, refer to: Air Deflector - 2.0L Duratorq-TDCi/2.2L Duratorq-TDCi (110kW/150PS) - Puma (501-02 Front End Body Panels, Removal and Installation).

9. Check and top up the coolant if necessary.

Published: 11-May-2011

Air Conditioning -

Torque Specifications

Description	Nm	lb-ft	lb-in
Air conditioning (A/C) clutch retaining nut	26	19	-
A/C compressor retaining bolts	25	18	-
A/C compressor manifold and tube retaining bolt	20	15	-
A/C condenser core retaining bolts	7	-	62

General Specifications

Item	Specification
A/C clutch air gap	0.35 mm – 0.75 mm (0.014 in – 0.03 in)

Air Conditioning - Air Conditioning

Description and Operation

The air conditioning (A/C) system is a clutch cycling, fixed orifice tube type.

The A/C compressor is driven by the engine. The A/C compressor primes the gaseous refrigerant out of the suction accumulator and compresses it. The refrigerant heats up and is passed to the condenser core under high pressure.

At this point heat is drawn from the refrigerant by the air being forced past the cooling fins. Because of this heat loss, the refrigerant liquefies and leaves the condenser core.

An evaporator core orifice, which separates the refrigerant at high pressure from that at low pressure, is located between the condenser core and the evaporator core. This evaporator core orifice slows down the flow of the refrigerant from the A/C compressor, so that the pressure builds up in the condenser core.

After passing through the evaporator core orifice the liquid refrigerant expands in the circuit to the evaporator core. In the evaporator core the liquid refrigerant converts back into the gaseous state and this causes heat to be extracted from the air coming into the vehicle. The air therefore cools down and the moisture it contained is given up at the evaporator core. The refrigerant enters the suction accumulator and is primed up again by the A/C compressor.

The system is protected by the pressure transducer. The pressure transducer is used to control over pressure in the high side of the A/C system.

A/C Compressor and Clutch Assembly

• NOTE: Internal A/C compressor components are not serviced separately. The A/C scroll compressor is serviced only as an assembly.

The compressor has a variable capacity via an internal valve, which can by-pass volume through the compressor when required. Compressor output varies from 100% to 30% depending on refrigerant demand, the variation being governed by the internal valve within the compressor housing. The compressor has protection in the form of a pressure relief valve and a sensing element for over temperature conditions.

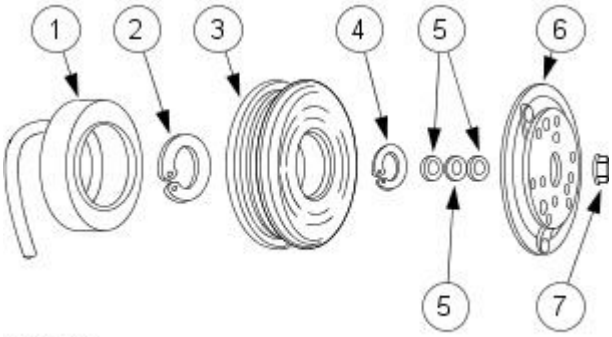

A0000907

Item	Part Number	Description
1	—	A/C clutch field coil
2	—	Field coil snap ring
3	—	A/C clutch pulley
4	—	Pulley snap ring
5	—	A/C clutch hub spacer
6	—	A/C clutch
7	—	A/C clutch nut

The magnetic A/C clutch has the following characteristics:

- It drives the compressor shaft.
- When battery positive voltage is applied to the A/C clutch field coil, the clutch disc and hub assembly is drawn toward the A/C clutch pulley.
- The magnetic force locks the clutch disc and hub assembly and the A/C clutch pulley together as one unit, causing the compressor shaft to rotate.
- When battery positive voltage is removed from the A/C clutch field coil, springs in the clutch disc and hub assembly move the clutch disc away from the A/C clutch pulley.

A/C Condenser Core

The A/C condenser core has the following characteristics:

- It is an aluminum fin and tube design heat exchanger located in front of the vehicle radiator.
- It cools compressed refrigerant gas by allowing air to pass over fins and tubes to extract heat and by condensing gas to liquid refrigerant as it is cooled.

A/C Evaporator Core

The A/C evaporator core is mounted within the passenger compartment and is situated with the heater core in a single housing.

Suction/Accumulator

The suction/accumulator is mounted under the right-hand front wheel arch liner.

The suction/accumulator is connected to the low pressure side of the A/C system and is used to make sure only refrigerant gas is passed to the compressor and not liquid.

The suction/accumulator also removes moisture from the refrigerant.

A/C Pressure transducer

The pressure transducer is used to control over pressure in the high side of the A/C system.

Fixed orifice tube

The fixed orifice tube system allows the compressed liquid to expand, by metering the liquid into the low pressure area of the evaporator.

The low pressure being created by the restriction of the fixed orifice tube and the suction of the scroll type compressor.

The liquid begins to change state by transferring from a high pressure liquid into a low pressure gas immediately it leaves the fixed orifice tube.

Service Gauge Port Valves

The service gauge port valves are located on the right-hand side at the rear of the engine bay.

The fitting is an integral part of the refrigerant line or component.

- Special couplings are necessary for both the high side and low side service gauge ports.

Published: 11-May-2011

Air Conditioning - Air Conditioning

Diagnosis and Testing

For additional information refer toSection 412-00 Climate Control System - General Information.

Air Conditioning - Air Conditioning (A/C) Compressor2.0L NA V6 - AJV6/2.5L NA V6 - AJV6/3.0L NA V6 - AJ27

Removal and Installation

Removal

1. Reclaim the refrigerant. For additional information, refer toSection 412-00 Climate Control System - General Information.
2. Raise and support the vehicle. For additional information, refer to Section 100-02 Jacking and Lifting.
3. Detach the accessory drivebelt.
   1. Using the special tool, rotate the belt tensioner counter clockwise.
   2. Detach the accessory drivebelt

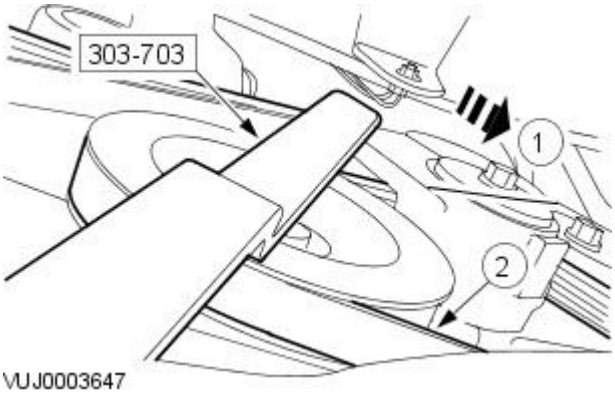

4. Disconnect the electrical connector.

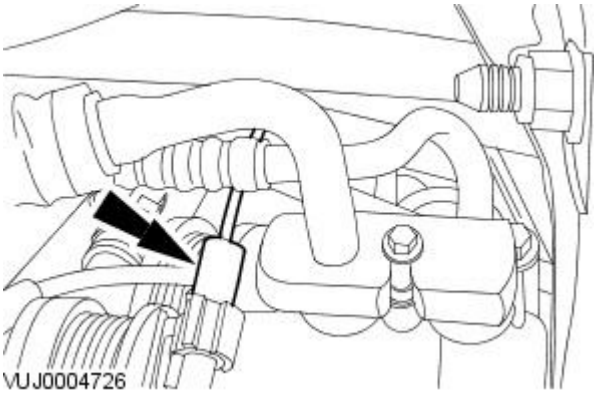

5. NOTE: Seal the tube and the compressor with plugs

   Detach the compressor supply and return tubes.

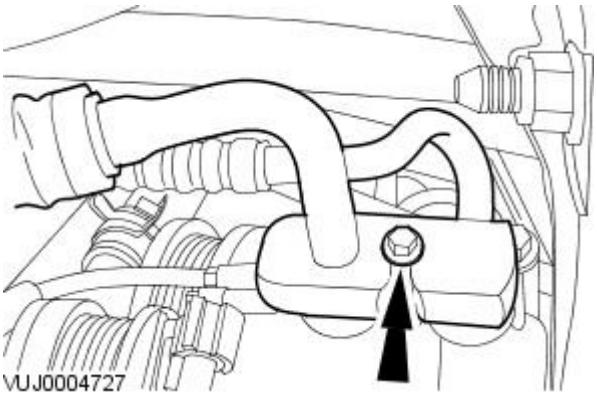

6. Remove and discard the compressor O-rings.

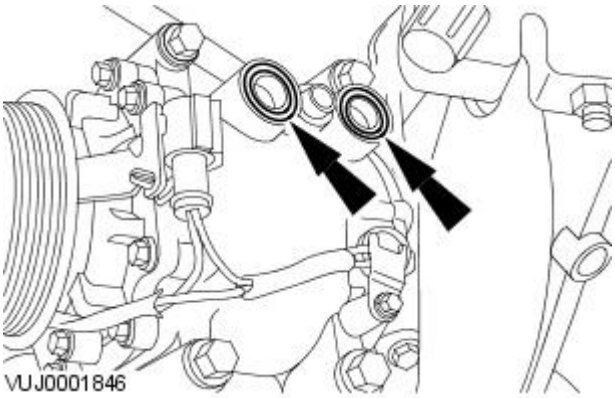

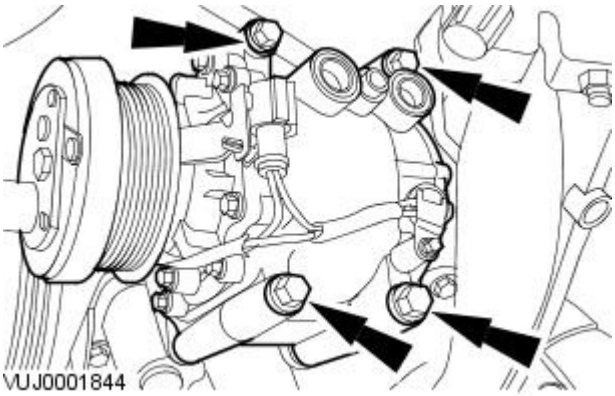

7. Remove the compressor.

Installation

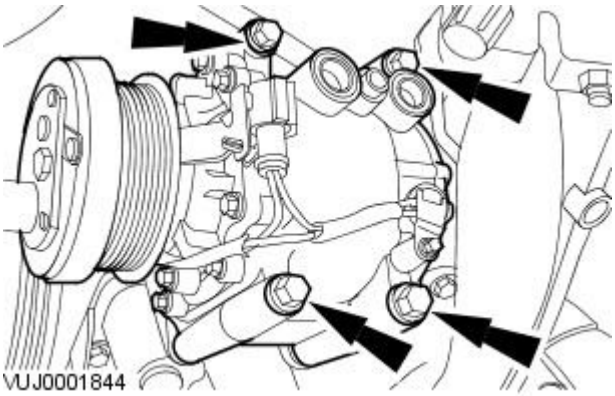

1. NOTE: Install new O-ring seals.

• NOTE: Coat the refrigerant line O-ring seals in clean refrigerant oil prior to installation.

• NOTE: 5oz of oil are contained in the new compressor. The air conditioning system requires a total of 7oz of oil.

To install, reverse the removal procedure.

- Tighten to 25 Nm.

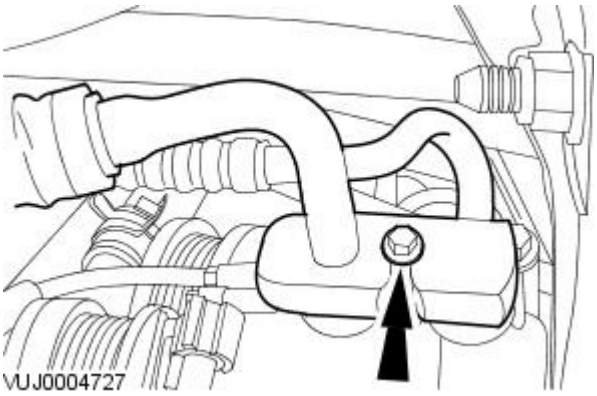

2. Tighten to 25 Nm.

Air Conditioning - Air Conditioning (A/C) Compressor2.0L Duratorq-TDCi/2.2L Duratorq-TDCi (110kW/150PS) - Puma

Removal and Installation

Special Tool(s)	
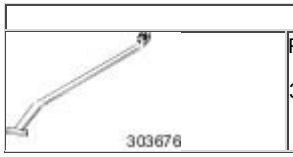	Release tool, belt tensioner 303-676

Removal

1. Recover the air conditioning (A/C) refrigerant.
   For additional information, refer to: Air Conditioning (A/C) System Recovery, Evacuation and Charging (412-00 Climate Control System - General Information, General Procedures).
2. Remove the air cleaner.
   For additional information, refer to: Air Cleaner (303-12B Intake Air Distribution and Filtering - 2.0L Duratorq-TDCi/2.2L Duratorq-TDCi (110kW/150PS) - Puma, Removal and Installation).
3. Loosen the A/C compressor supply and return tubes retaining bolt.

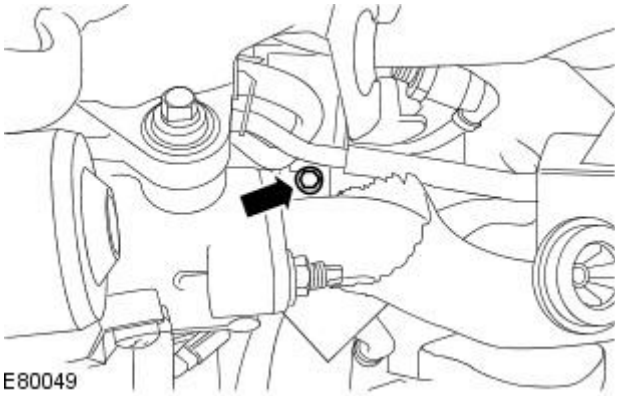

4. Disconnect the electrical connector.

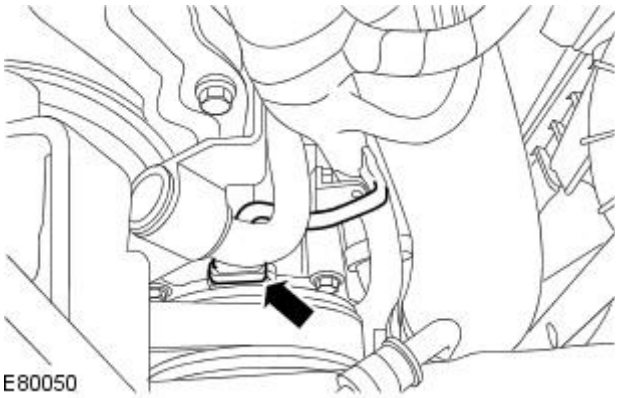

5. Detach the engine wiring harness from the retaining bracket.

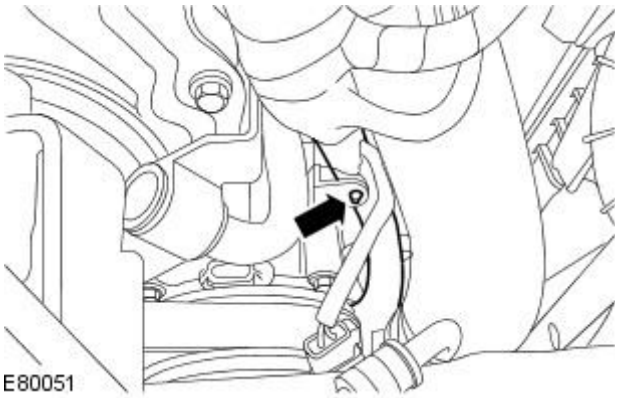

6. Remove the air deflector.
   For additional information, refer to: Air Deflector - 2.0L Duratorq-TDCi/2.2L Duratorq-TDCi (110kW/150PS) - Puma (501-02 Front End Body Panels, Removal and Installation).

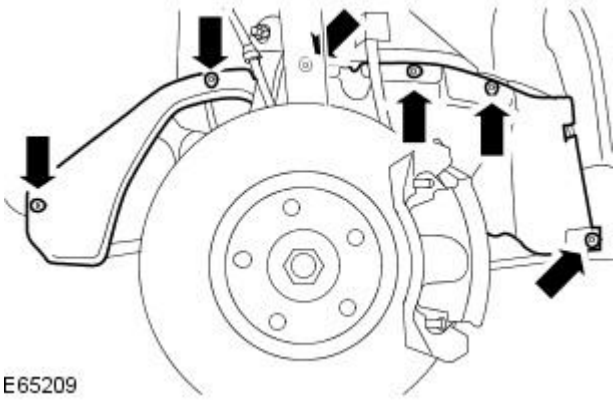

7. NOTE: Road wheel shown removed for clarity.

Remove the right-hand wheel arch liner access panels.

8. Using the special tool, detach the accessory drive belt.

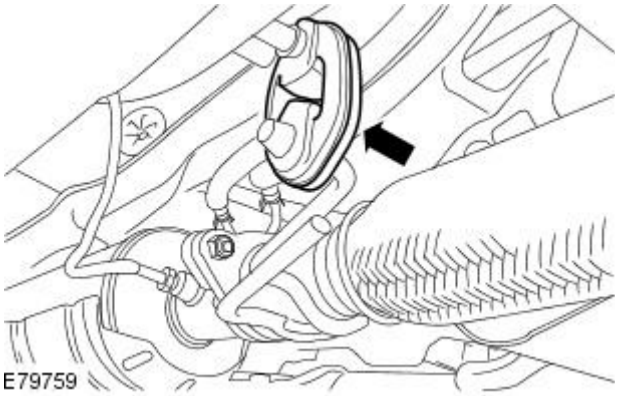

9. Detach the exhaust flexible pipe support isolator.

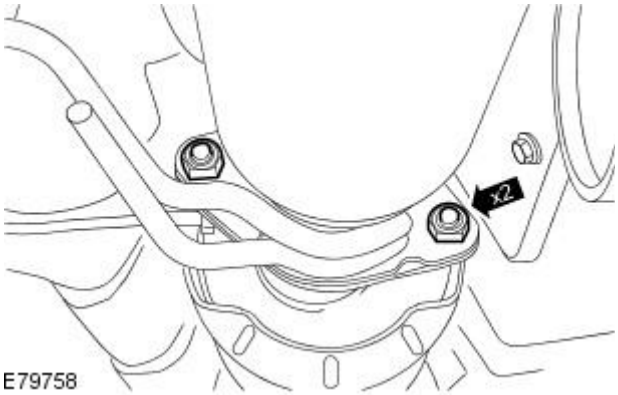

10. CAUTION: Make sure that the exhaust flexible pipe is positioned below the diesel partciculate filter (DPF) flange. Failure to follow this instruction may result in damage to exhaust flexible pipe.

Release the exhaust flexible pipe from the diesel particulate filter (DPF).

- Remove the exhaust flexible pipe retaining nuts.
- Remove and discard the gasket and nuts.

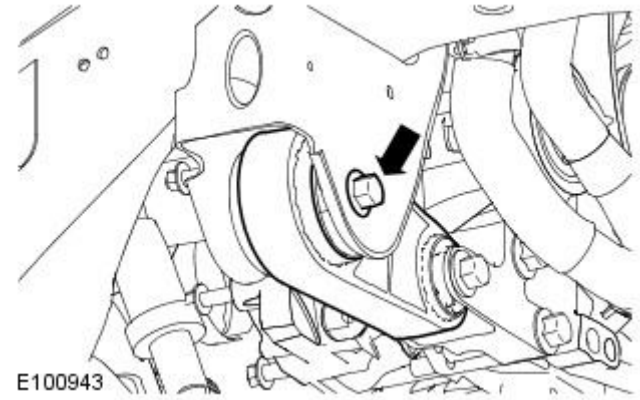

11. CAUTION: Care must be taken to avoid damaging components when positioning the block.

Displace the engine approximately 40mm rearwards.

- Remove the roll restrictor rear retaining bolt.
- With assistance displace the engine and support in an appropriate position using a suitable block.

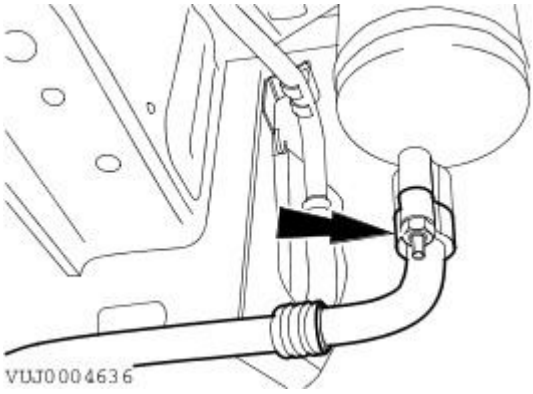

12. NOTE: Seal the tube and the suction accumulator with plugs.

Detach the suction accumulator pipe.

- Remove and discard the O-ring seal.
- Install blanking plugs to the exposed ports.

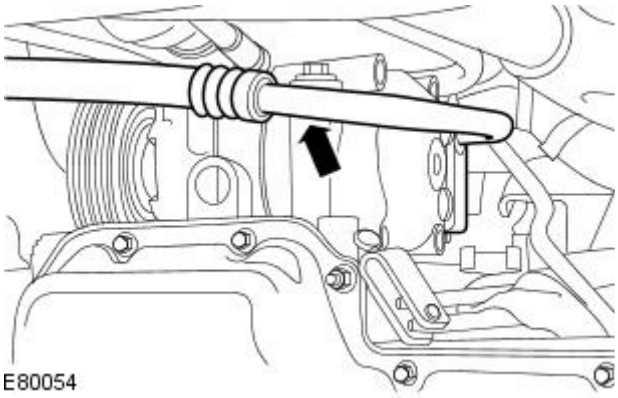

13. NOTE: Remove and discard the O-ring seals if the old A/C compressor is to be refitted.

Detach the A/C compressor supply and return tubes.

- Install blanking plugs to the exposed ports.
- Displace the A/C tubes to a position above the A/C compressor.

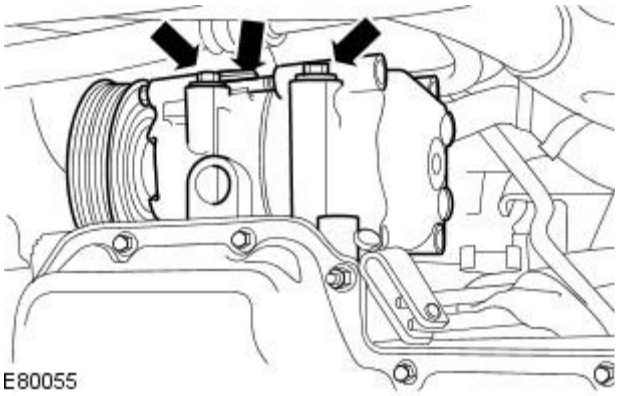

14. Remove the A/C compressor.

- Remove the retaining bolts.

Installation

1. Add refrigerant oil to the new A/C compressor.
For additional information, refer to: Refrigerant Oil Adding (412-00 Climate Control System - General Information, General Procedures).

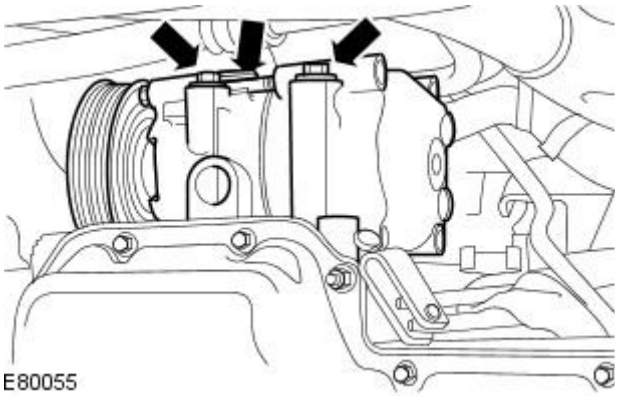

2. NOTE: If installing the old A/C compressor, install new O-ring seals.

• NOTE: If installing a new A/C compressor, make sure that new O-ring seals are already installed.

• NOTE: Coat the A/C compressor O-ring seals in clean refrigerant oil prior to installation.

To install, reverse the removal procedure.

- Tighten to 25 Nm.

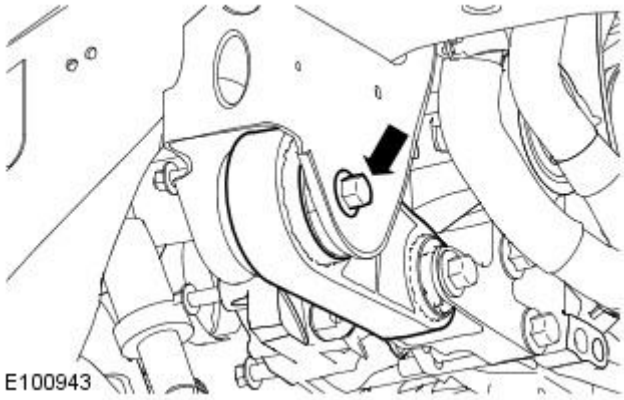

3. Tighten to 80 Nm.

- With assistance remove the engine support block.

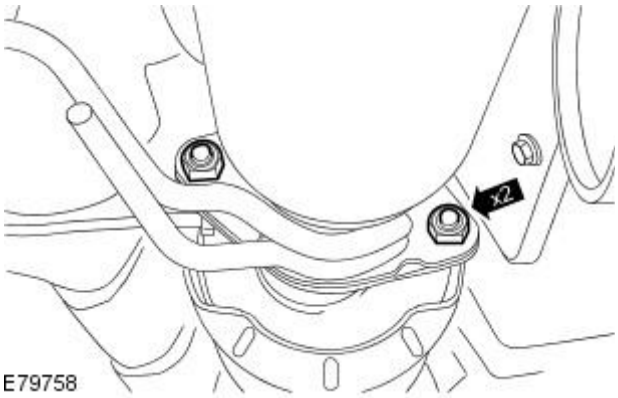

4. Tighten to 46 Nm.

- Install a new exhaust flexible pipe gasket and nuts.

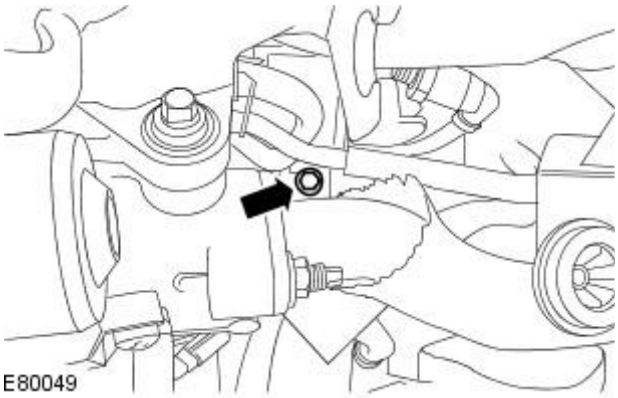

5. Tighten to 20 Nm.

Air Conditioning - Air Conditioning (A/C) Pressure Transducer

Removal and Installation

Removal

1. Remove the front wheel and tire. For additional information, refer to Section 204-04 Wheels and Tires.
2. Detach the wheel arch liner.

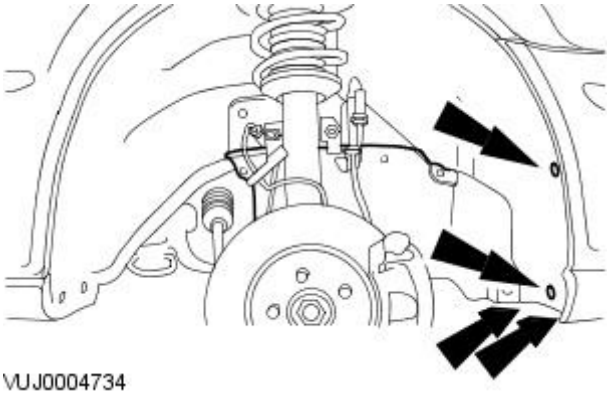

3. Disconnect the electrical connector.

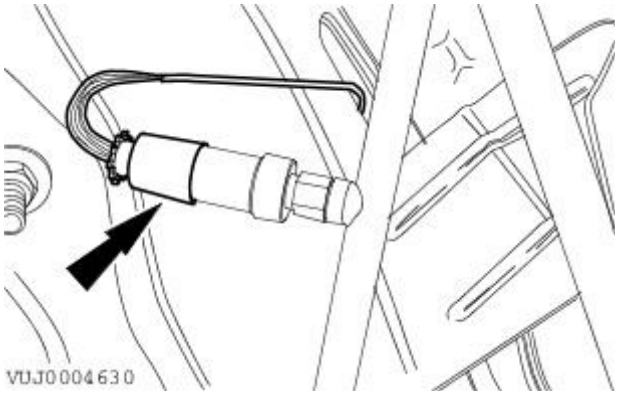

4. Remove the pressure transducer.

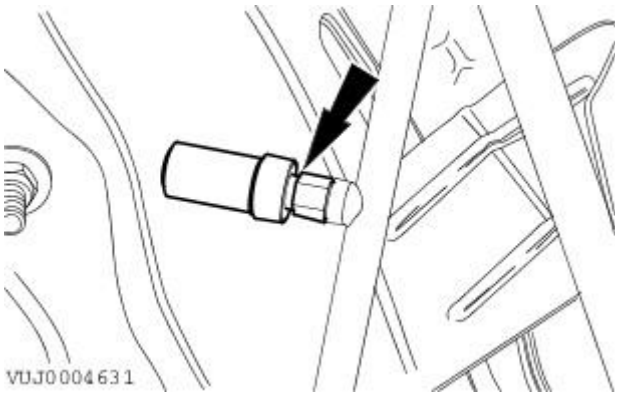

Installation

1. To install, reverse the removal procedure.

Air Conditioning - Clutch and Clutch Field Coil2.0L NA V6 - AJV6 / 2.5L NA V6 - AJV6 / 3.0L NA V6 - AJ27

Removal and Installation

Special Tool(s)	
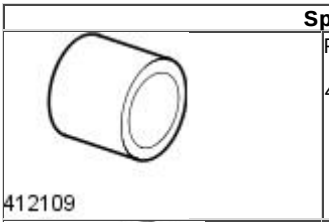 412109	Pulley Replacer 412-109
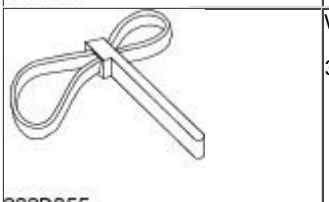 303D055	Wrench Strap-Universal 303-D055
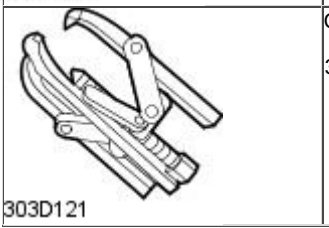 303D121	Crankshaft Damper Remover 303-D121

Removal

1. Remove the air conditioning (A/C) compressor.
   For additional information, refer to: Air Conditioning (A/C) Compressor - 2.0L NA V6 - AJV6/2.5L NA V6 - AJV6/3.0L NA V6 - AJ27 (412-03 Air Conditioning, Removal and Installation).
2. Using the special tool, loosen the A/C clutch retaining nut.

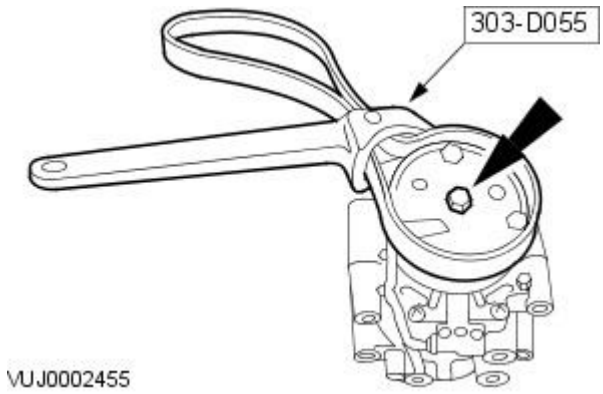

VUJ0002455

3. Remove the A/C clutch.
   - Remove the A/C clutch retaining nut.

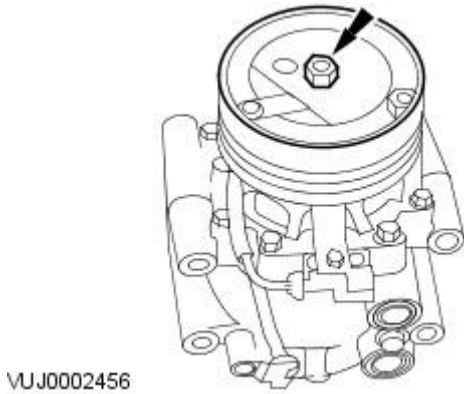
VUJ0002456

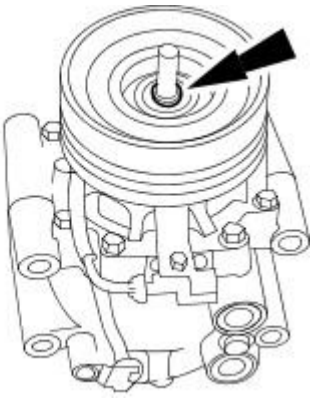
VUJ0002457

4. Remove the A/C clutch shim.

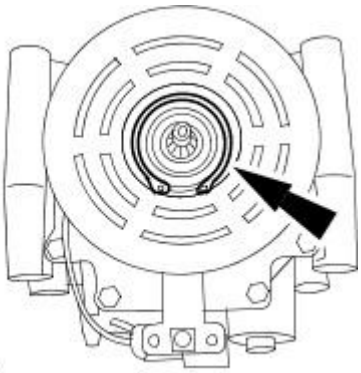
VUJ0002458

5. Remove the A/C clutch pulley circlip.

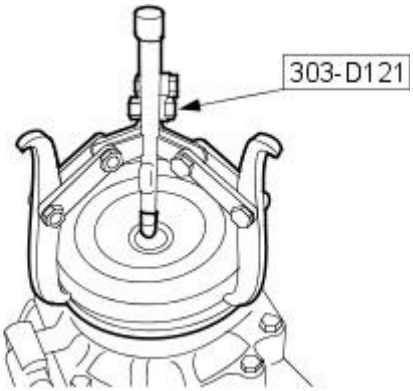

VUJ0002459

6. CAUTION: Do not use air tools. Failure to follow this instruction may result in damage to the component.

Using the special tool, remove the A/C clutch pulley.

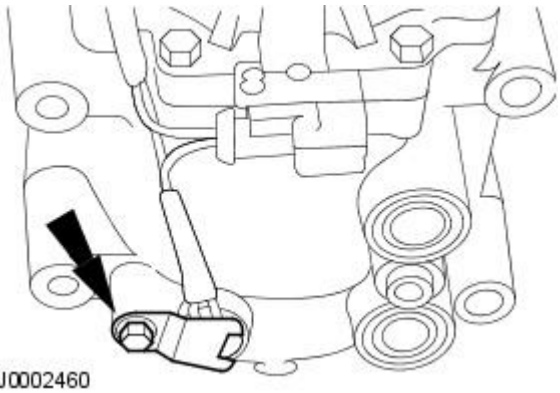
VUJ0002460

7. Remove the A/C sensor retaining plate.

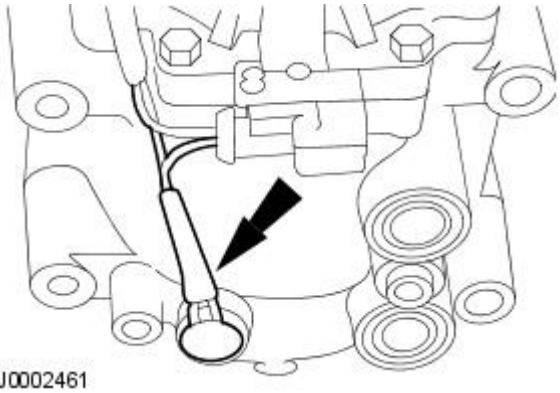
VUJ0002461

8. Detach the A/C sensor.

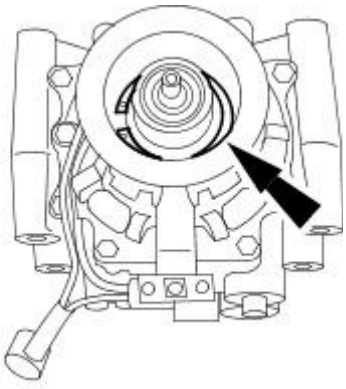

VUJ0002462

9. Remove the A/C clutch and clutch field coil circlip.

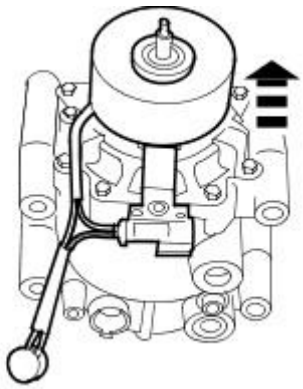

VUJ0002463

10. Remove the A/C clutch and clutch field coil.

Installation

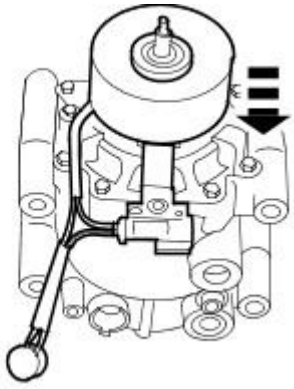

VUJ0002466

1. Install the A/C clutch and clutch field coil.

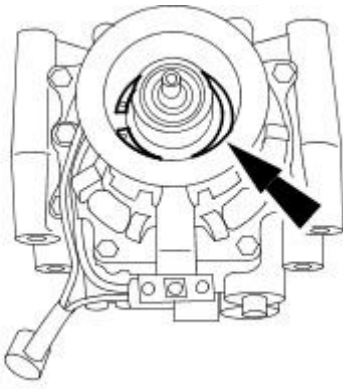

VUJ0002462

2. CAUTION: Make sure the circlip is installed and seated correctly. Failure to follow this instruction may result in damage to the vehicle.

Install the A/C clutch and clutch field coil circlip.

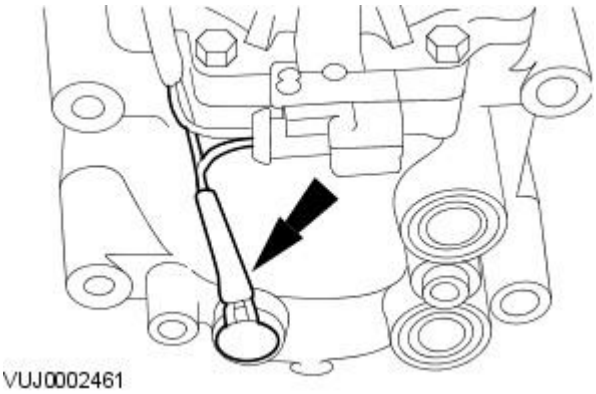

3. Attach the A/C temperature sensor.

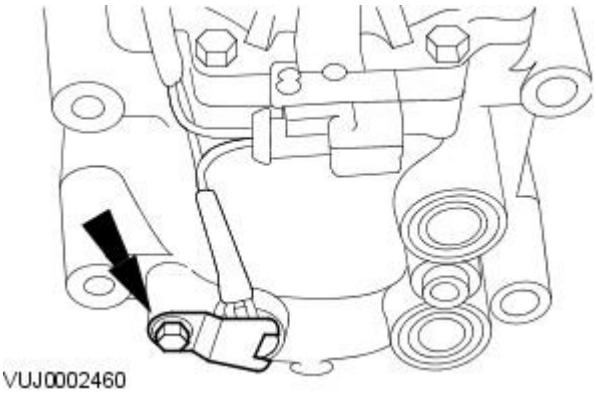

4. Install the A/C temperature sensor retaining plate.

- Tighten to 6 Nm.

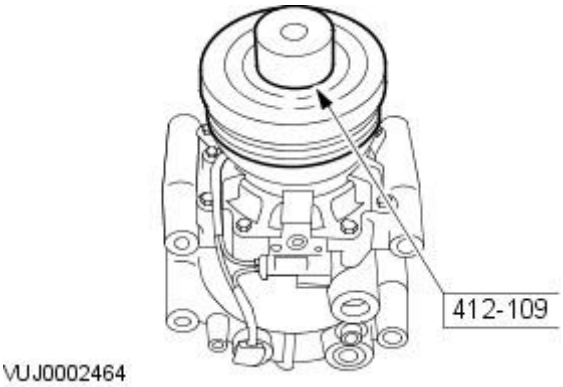

5. NOTE: The A/C clutch bearing and pulley is a slip fit on the compressor. If correctly aligned it should slip on easily. If difficulty is experienced on installation, use the special tool and gently tap the A/C clutch pulley.

Using the special tool, install the A/C clutch pulley.

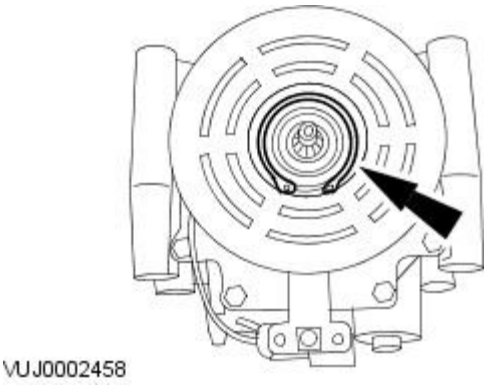

6. CAUTION: Make sure the circlip is installed and seated correctly. Failure to follow this instruction may result in damage to the vehicle.

Install the A/C clutch pulley circlip.

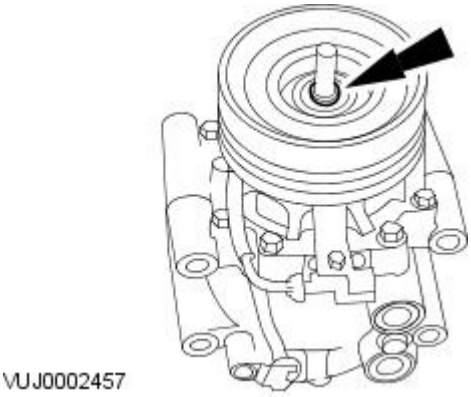

7. Install the A/C clutch shim.

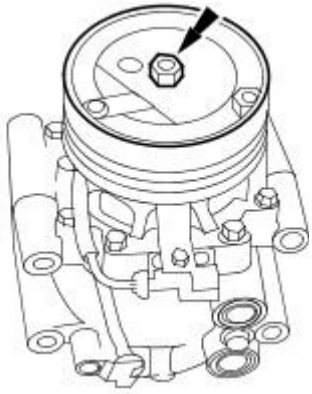

VUJ0002456

8. Install the A/C clutch.

- Install the A/C clutch retaining nut.

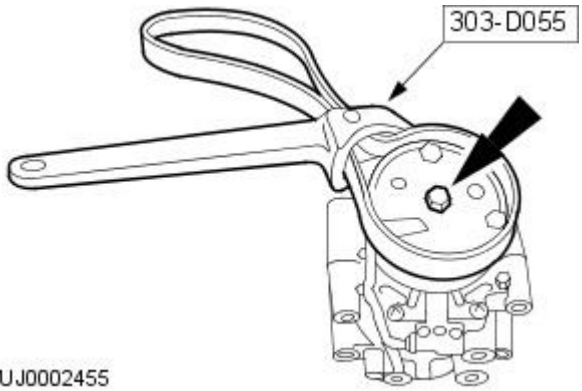

VUJ0002455

9. Using the special tool, tighten the A/C clutch retaining nut.

- Tighten to 26 Nm.

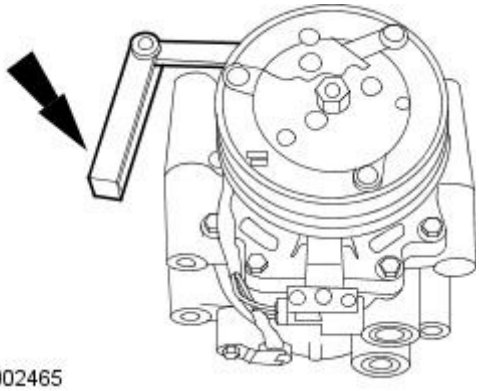

VUJ0002465

10. Measure and adjust the A/C clutch air gap by removing or installing A/C clutch shims.

- A/C clutch air gap to be set between 0.35 mm (0.014 in) and 0.75 mm (0.03 in).

11. Install the A/C compressor.
For additional information, refer to: Air Conditioning (A/C) Compressor - 2.0L NA V6 - AJV6/2.5L NA V6 - AJV6/3.0L NA V6 - AJ27 (412-03 Air Conditioning, Removal and Installation).

Air Conditioning - Condenser Core

Removal and Installation

Removal

1. Reclaim the refrigerant. For additional information, refer to Section 412-00 Climate Control System - General Information.
2. Remove the front bumper cover. For additional information, refer to Section 501-19 Bumpers.
3. NOTE: Seal the tube and the condenser with plugs

   Detach the air conditioning tube.

   - Remove and discard the O-ring seal.

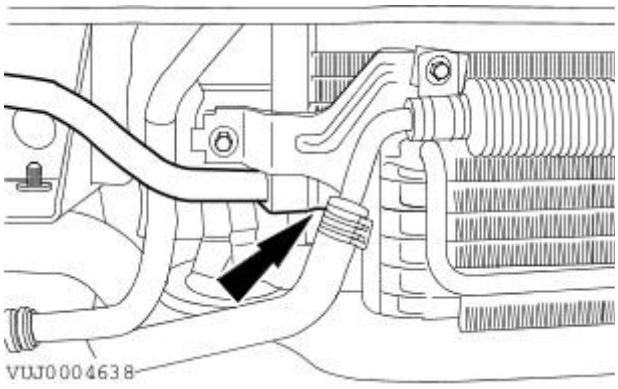

4. NOTE: Seal the tube and the condenser with plugs

   Detach the air conditioning tube.

   - Remove and discard the O-ring seal.

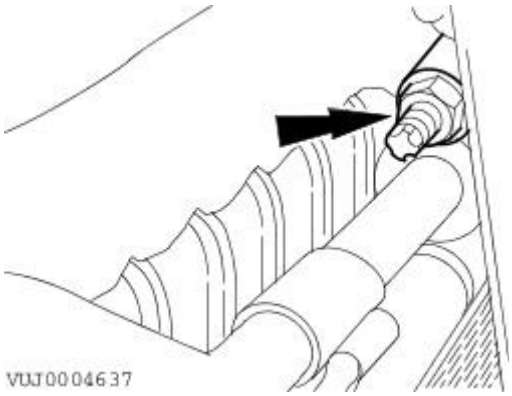

5. Detach the condenser.
   - Remove the retaining bolts.
   - Right-hand side shown, left-hand side similar.

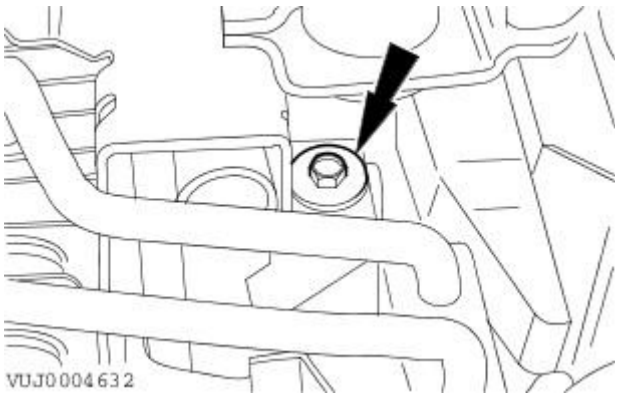

6. Lower the vehicle.
7. Remove the condenser.

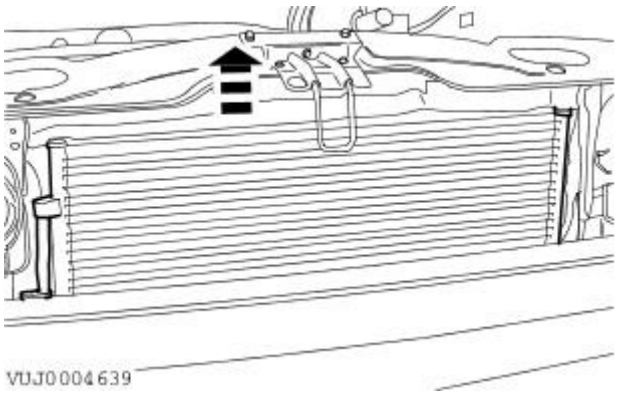

Installation

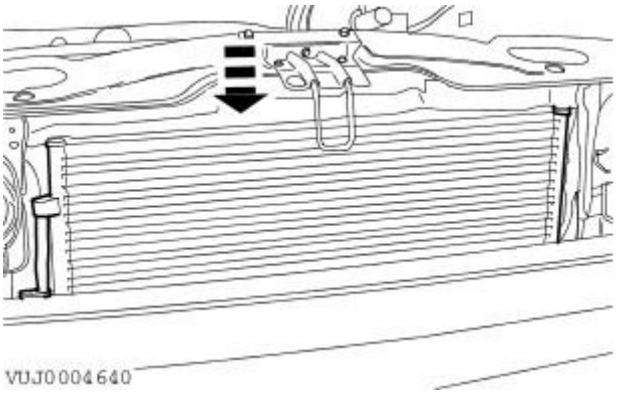

1. To install, reverse the removal procedure.

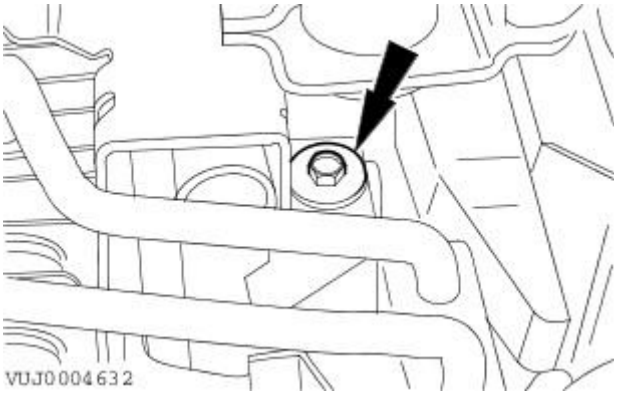

2. Tighten 7 Nm.

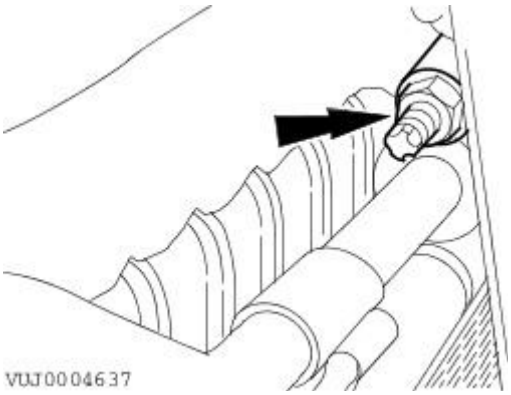

3. NOTE: Coat the refrigerant line O-ring seals in clean refrigerant oil prior to installation.

Install a new O-ring seal.

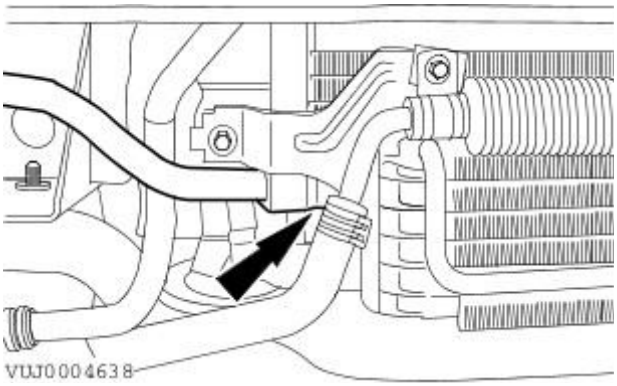

4. NOTE: Coat the refrigerant line O-ring seals in clean refrigerant oil prior to installation.

Install a new O-ring seal.

Air Conditioning - Evaporator Core

Removal and Installation

Removal

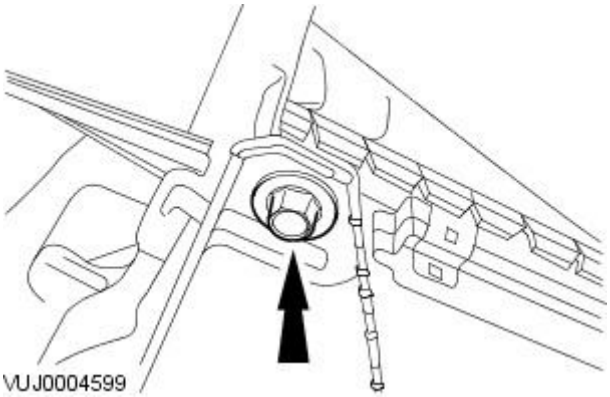

1. Remove the in vehicle cross beam and evaporator core housing. For additional information, refer to Section 412-02A Heating and VentilationSection 412-02B Auxiliary Heating.
2. Detach the blower motor housing from the in vehicle cross beam..

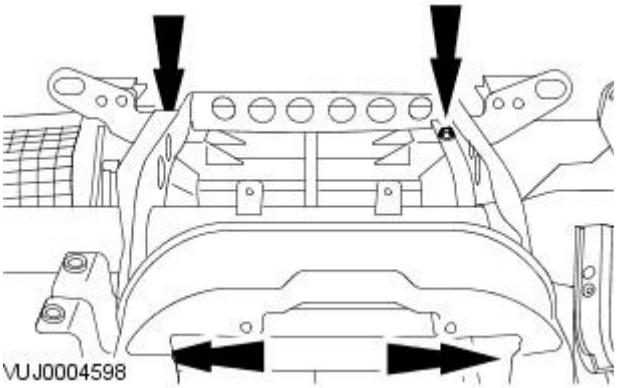

3. Remove the evaporator core housing from the in vehicle cross beam.

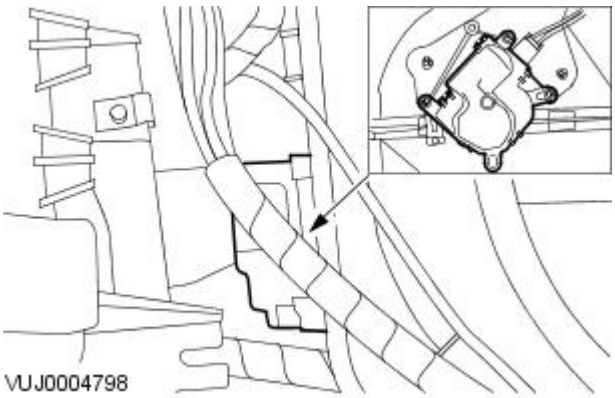

4. Remove the air inlet blend door actuator.
   - Remove the retaining screws.
   - Disconnect the electrical connector.

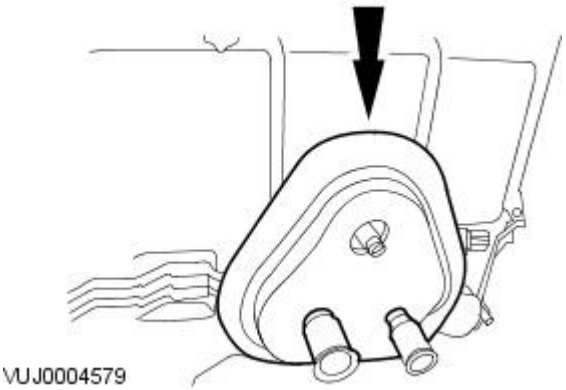

5. Remove the rubber seal.

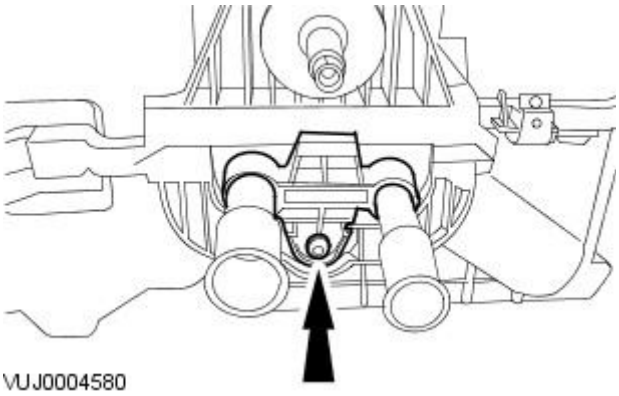

VUJ0004580

6. Remove the evaporator core support bracket.

- Remove the retaining screw.

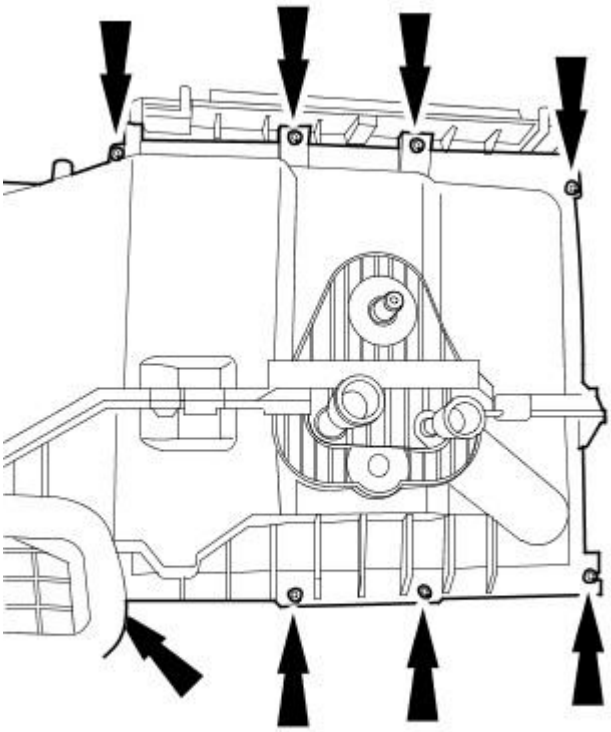

VUJ0004581

7. Remove the evaporator core housing.

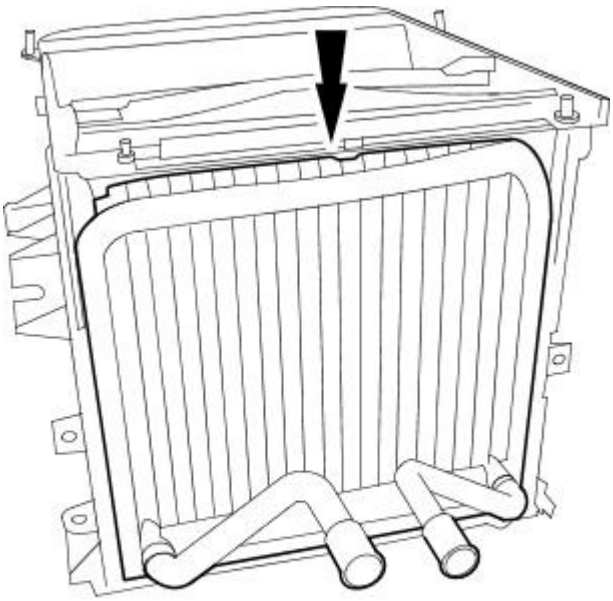

VUJ0004582

8. Remove the evaporator core.

Installation

1. To install, reverse the removal procedure.

Air Conditioning - Evaporator Core Orifice

Removal and Installation

Removal

1. Reclaim the refrigerant. For additional information, refer toSection 412-00 Climate Control System - General Information.
2. Detach the evaporator core orifice refrigerant tube.

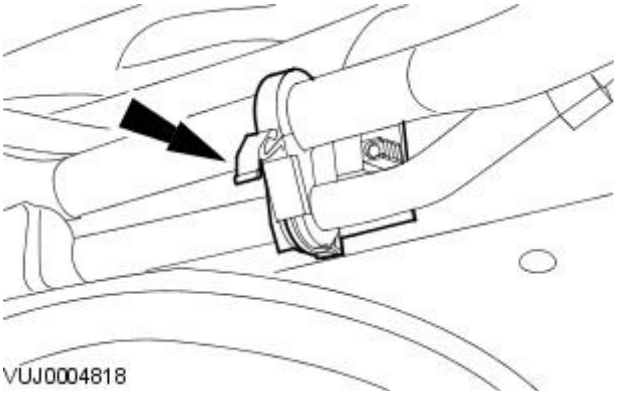

3. Disconnect the refrigerant line.
   - Remove and discard the O-ring seals.

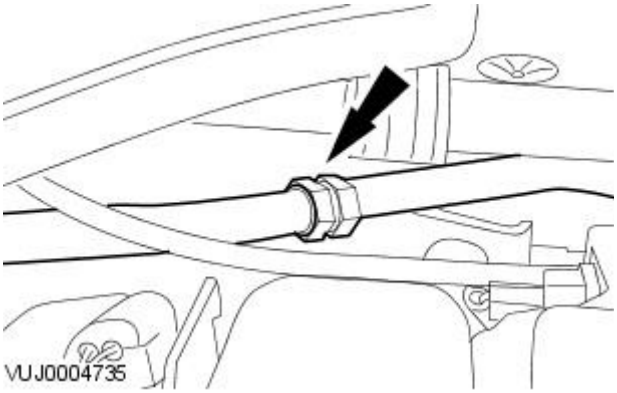

4. Using a suitable tool. Remove the evaporator core orifice.

Installation

1. NOTE: Coat the refrigerant line O-ring seals in clean refrigerant oil prior to installation.

   To install, reverse the removal procedure.

   - Install new O-ring seals.

Air Conditioning - Suction Accumulator

Removal and Installation

Removal

1. Reclaim the refrigerant. For additional information, refer toSection 412-00 Climate Control System - General Information.
2. Remove the washer resevoir. For additional information, refer to Section 501-16 Wipers and Washers.
3. NOTE: Seal the tube and the suction accumulator with plugs.

   Detach the suction accumulator pipe.

   - Remove and discard the O-ring seal.

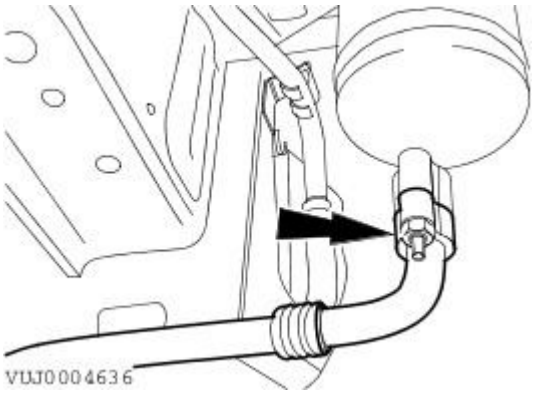

4. Remove the suction accumulator pipe retaining clip.

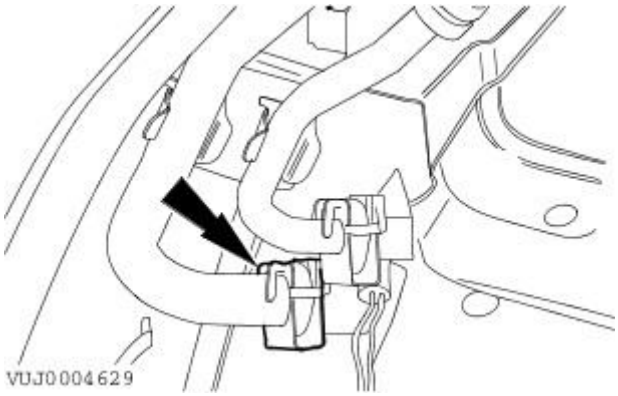

5. Detach the suction accumulator pipe.

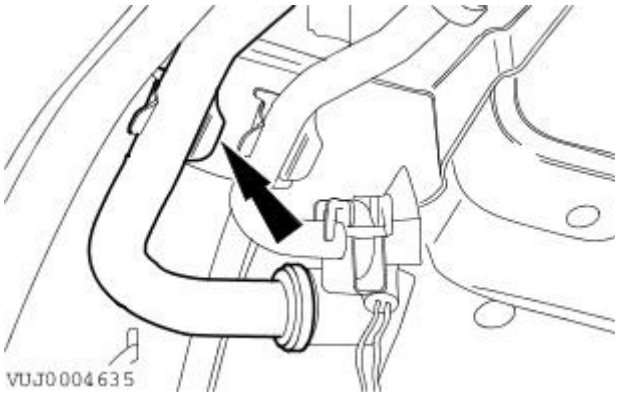

6. Using a suitable tool detach the suction accumulator pipe.
   - Remove and discard the O-ring seals.

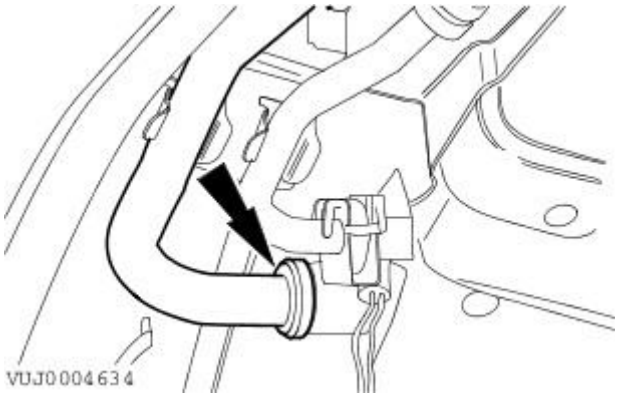

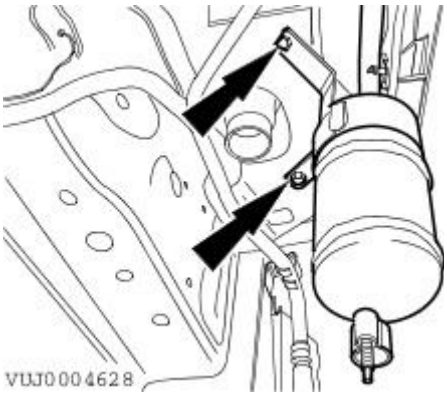

7. Remove the suction accumulator.

- Remove the retaining bolts.

Installation

1. To install, reverse the removal procedure.

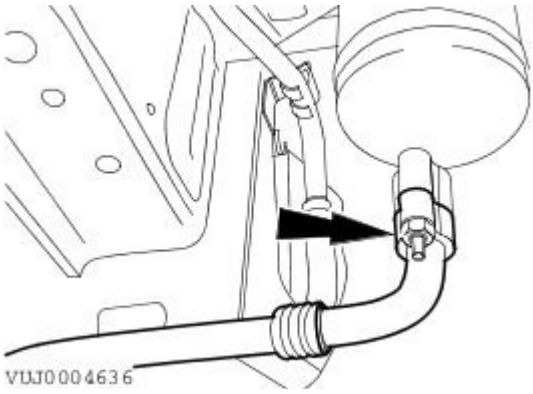

2. NOTE: Coat the refrigerant line O-ring seals in clean refrigerant oil prior to installation.

Install a new O-ring seal.

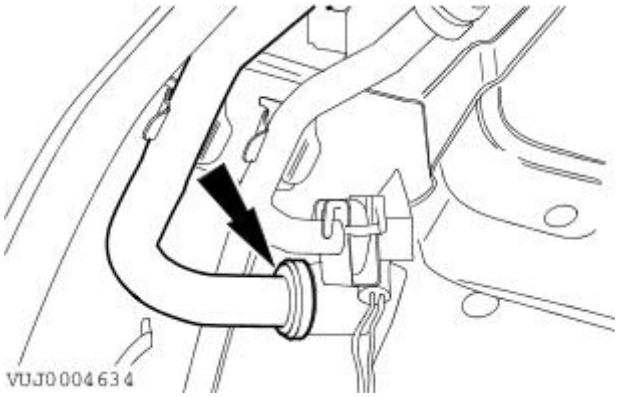

3. NOTE: Coat the refrigerant line O-ring seals in clean refrigerant oil prior to installation.

Install the retaining clip.

- Install a new O-ring seal.

Control Components - Control Components

Description and Operation

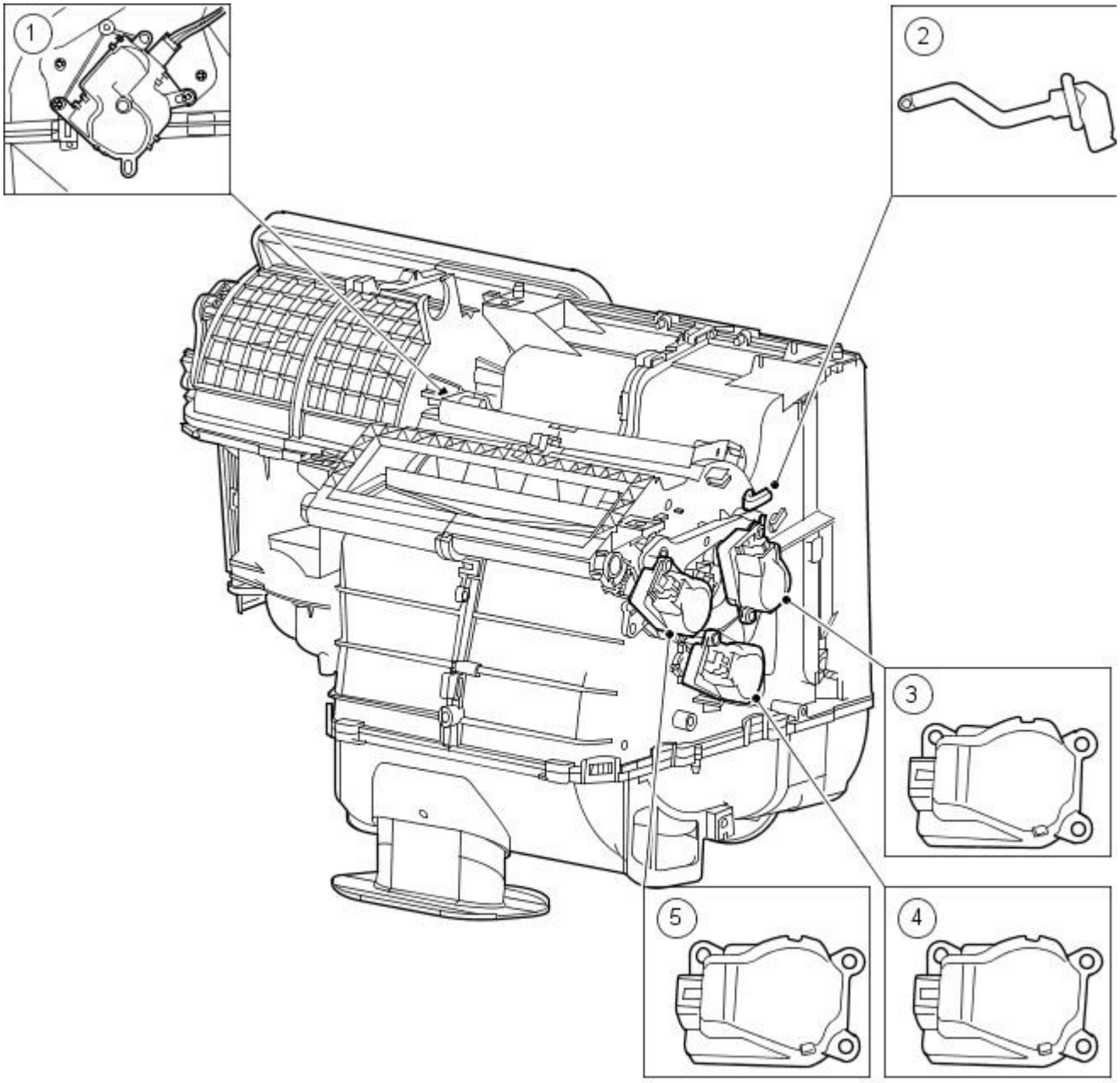

VUJ0004796

Item	Part Number	Description
1	—	Air inlet blend door actuator
2	—	Air discharge temperature sensor
3	—	Defrost vent/register blend door actuator
4	—	Temperature blend door actuator
5	—	Footwell vent/duct blend door actuator

Automatic climate control with touch screen

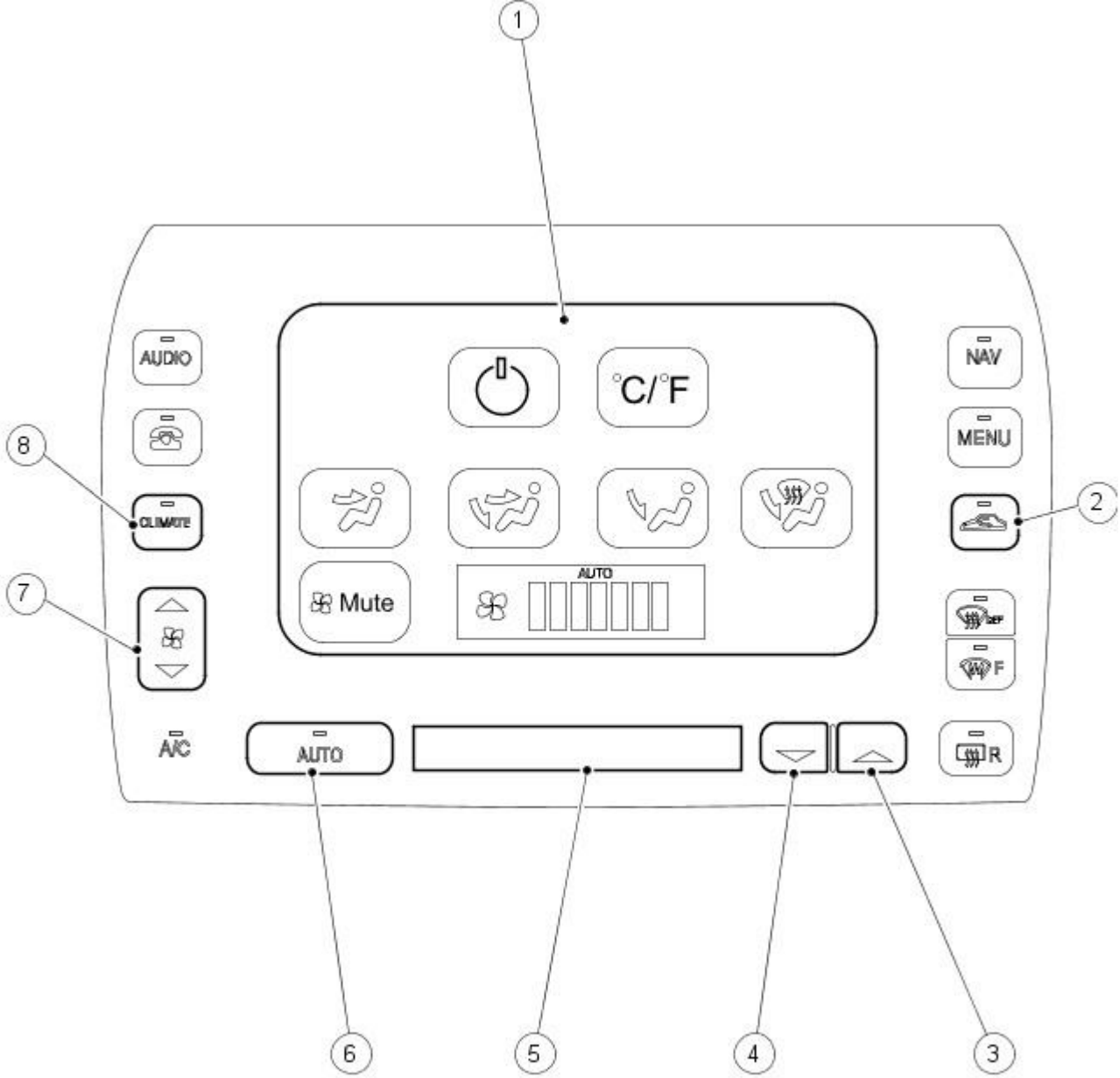

VUJ0004797

Item	Part Number	Description
1	—	Touch screen switch
2	—	Recirculated air switch
3	—	Increase set temperature switch
4	—	Decrease set temperature switch
5	—	Temperature/clock display
6	—	Automatic operation switch
7	—	Fan speed switch
8	—	Climate control select switch

Automatic climate control with liquid crystal display (LCD)

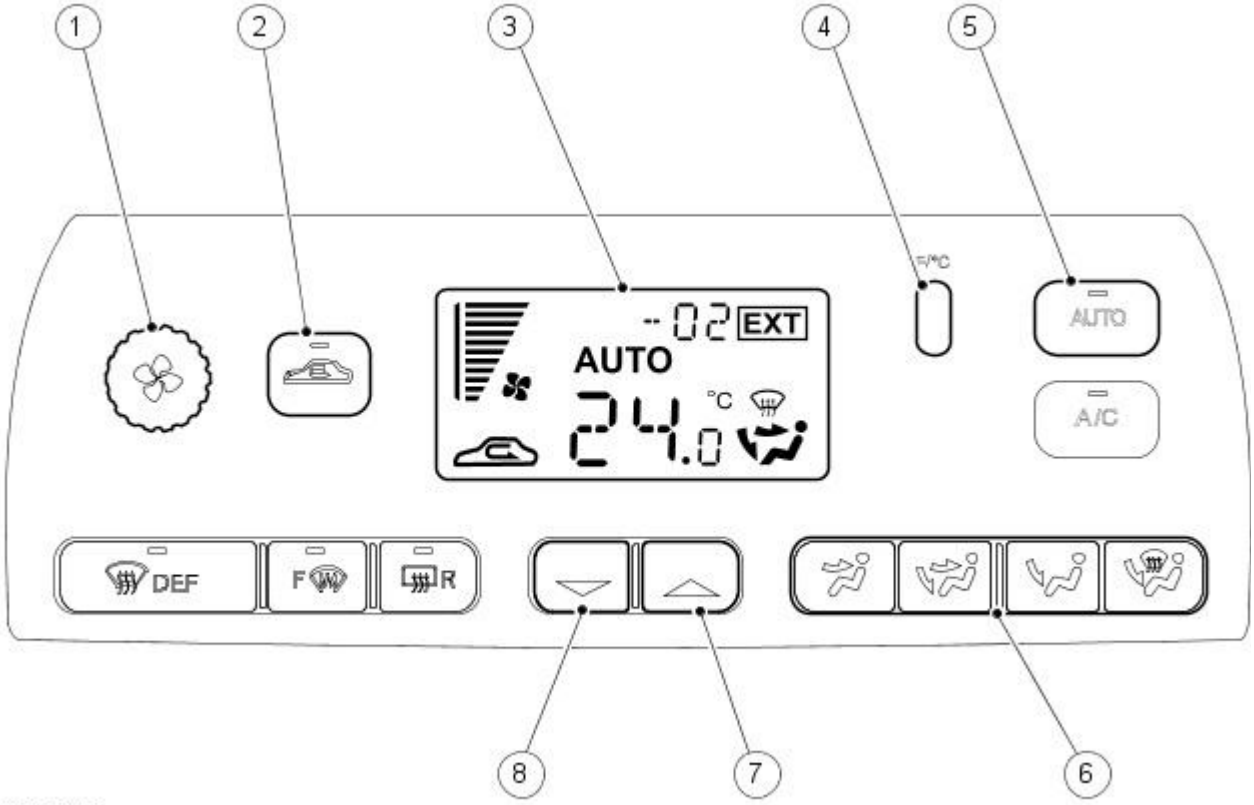

VUJ0004799

Item	Part Number	Description
1	—	Fan speed and ON/OFF switch
2	—	Recirculated air switch
3	—	Screen display
4	—	Celsius/Fahrenheit select switch
5	—	Automatic operation switch
6	—	Air distribution switches
7	—	Increase set temperature switch
8	—	Decrease set temperature switch

Manual climate control

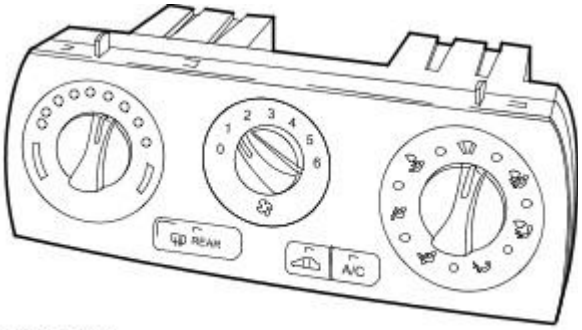

VUJ0004794

Item	Part Number	Description
1	—	Climate control assembly

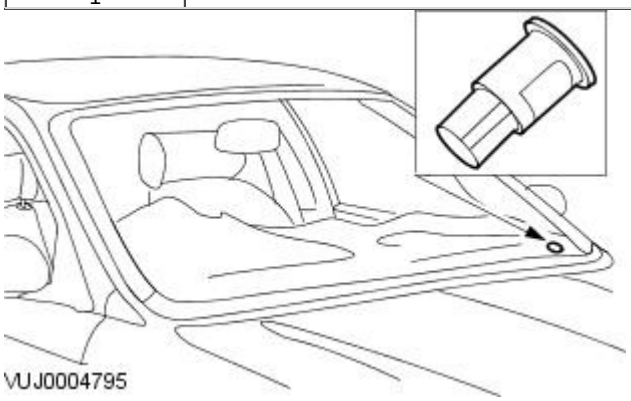

VUJ0004795

Item	Part Number	Description
1	—	Sunload sensor

This vehicle is fitted with one of the following climate control systems:

- manual climate control
- automatic climate control with a liquid crystal display (LCD) screen
- automatic climate control with a touch screen

Each system has a unique control panel located in the center console above the radio and audio controls.

Published: 11-May-2011

Control Components - Control Components

Diagnosis and Testing

For additional information, refer to Section 412-00 Climate Control System - General Information.

Control Components - Air Discharge Temperature Sensor

Removal and Installation

Removal

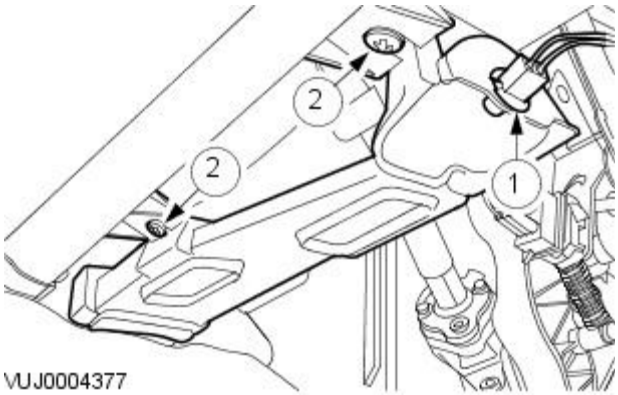

1. Remove the lower vent.

1. Detach the bulb holder.
2. Remove the lower vent.

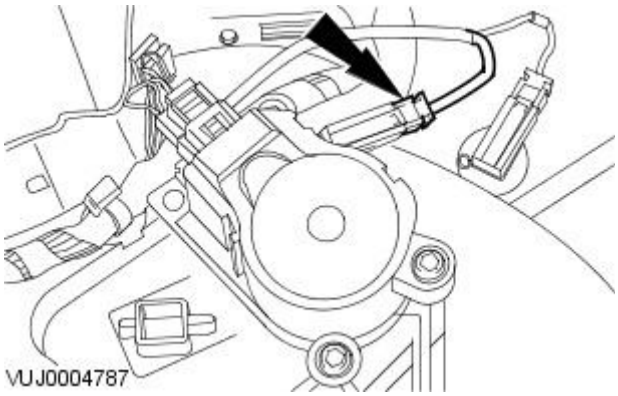

2. Disconnect the air discharge temperature sensor electrical connector.

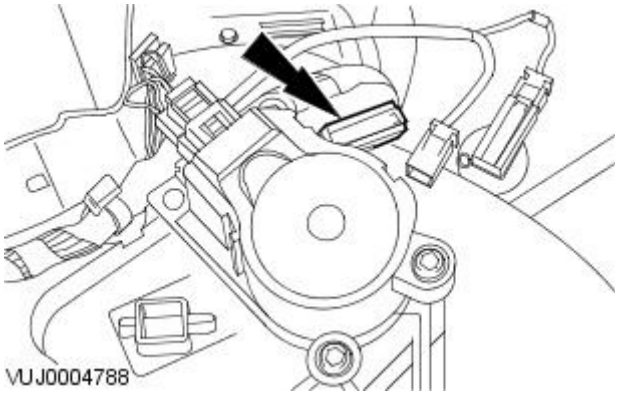

3. Remove the air discharge temperature sensor.

Installation

1. To install, reverse the removal procedure.

Control Components - Ambient Air Temperature Sensor

Removal and Installation

Removal

CAUTION: Make sure the ignition switch is in the off position before disconnecting the ambient air temperature sensor.

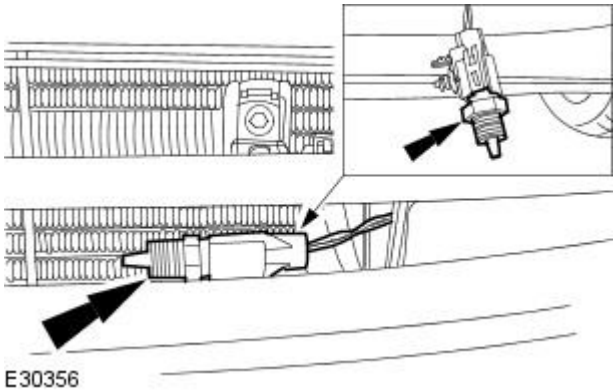

E30356

1. Detach the ambient air temperature sensor from the power assisted steering cooler bracket.

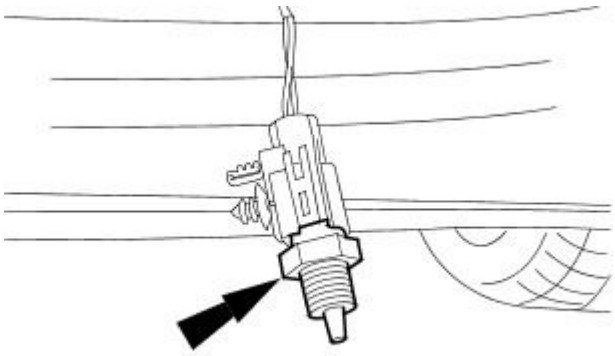

E30357

2. Remove the ambient air temperature sensor.
   - Disconnect the electrical connector.

Installation

1. To install, reverse the removal procedure.

Control Components - Climate Control Assembly

Removal and Installation

Removal

Vehicles with automatic transaxle

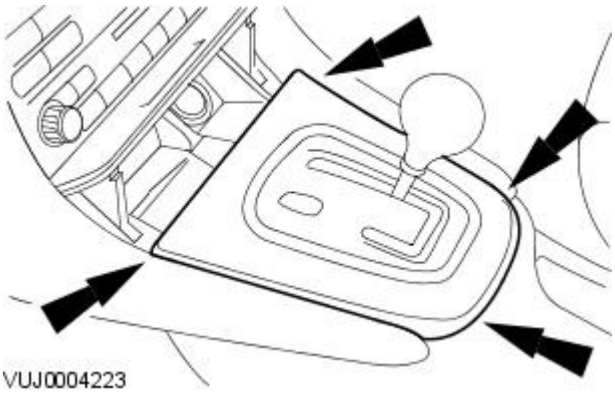

1. NOTE: To aid removal of the climate control assembly place the J-gate selector in the neutral position.

Remove the J-gate surround.

Vehicles with manual transaxle

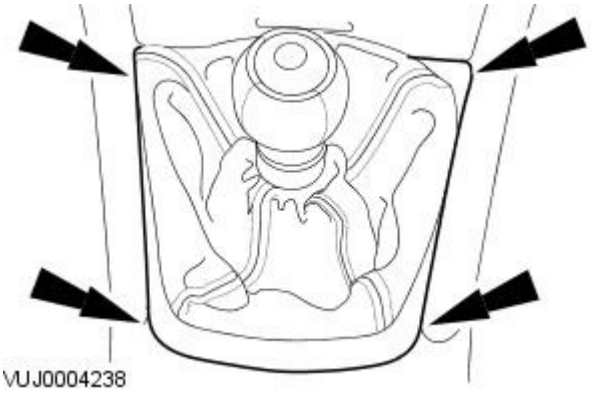

2. Detach the gear selector surround.

All vehicles

3. Disconnect the battery ground cable. For additional information, refer to Section 414-01 Battery, Mounting and Cables.

4. Remove the ashtray retaining screws.

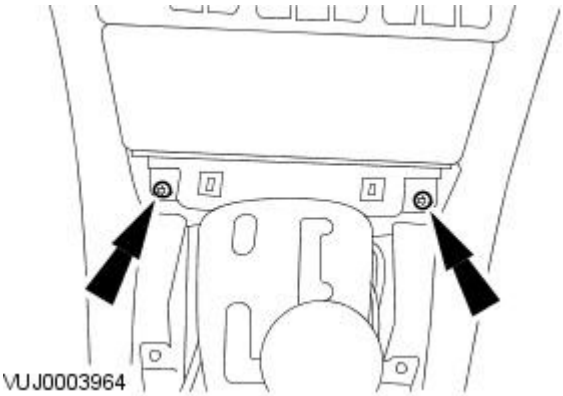

5. Remove the ashtray.

- Disconnect the electrical connectors.

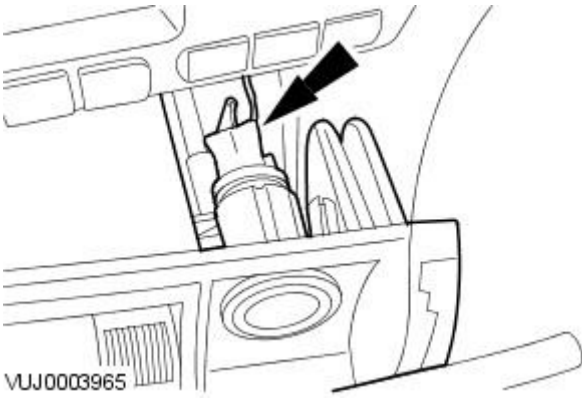

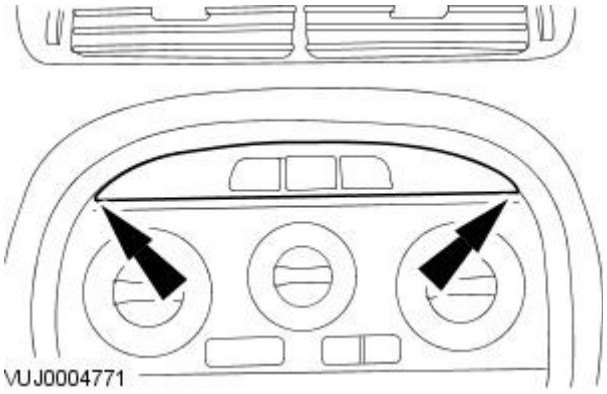

6. Remove the climate control assembly mounting bracket upper retaining screws cover.

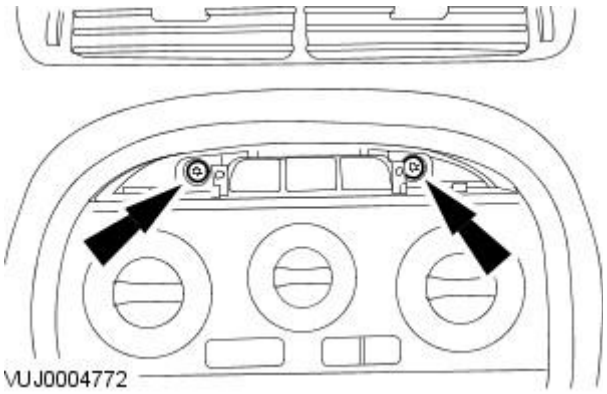

7. Remove the climate control assembly mounting bracket upper retaining screws.

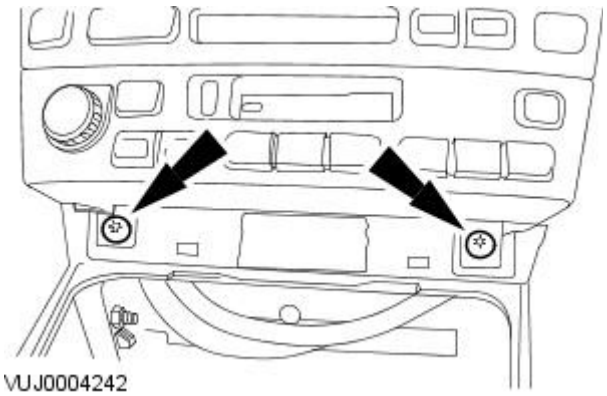

8. Remove the climate control assembly mounting bracket lower retaining screws.

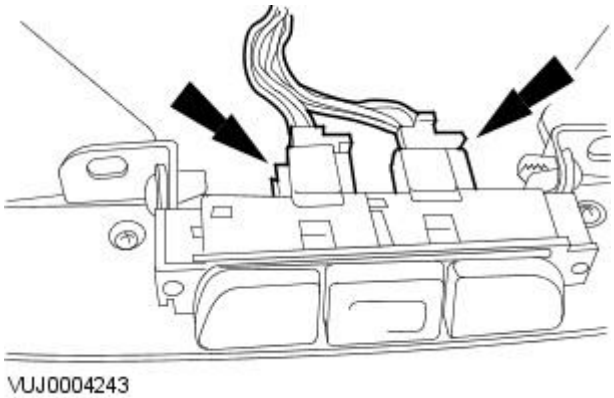

9. Disconnect the hazard lamp switch assembly electrical connectors.

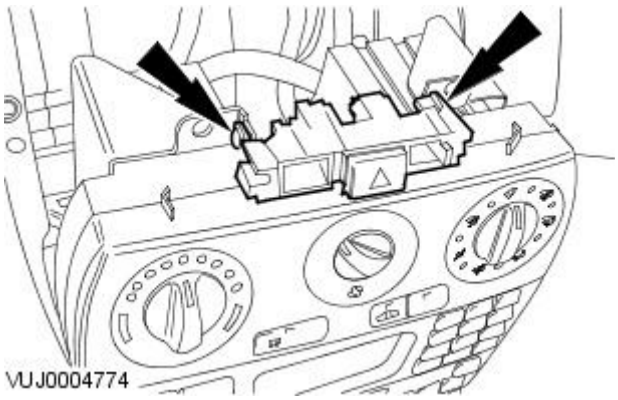

10. Remove the hazard lamp switch assembly.

- Remove the retaining screws.

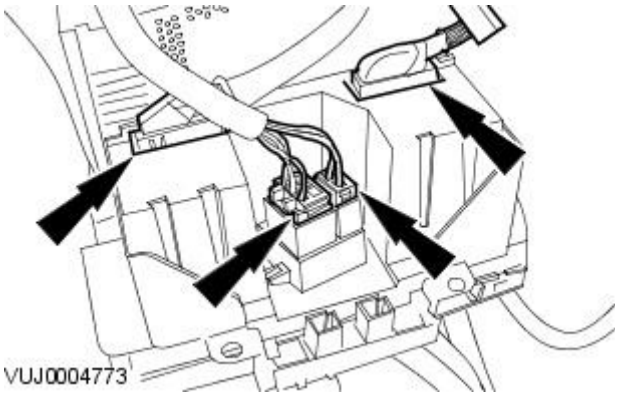

11. Disconnect the climate control assembly electrical connectors.

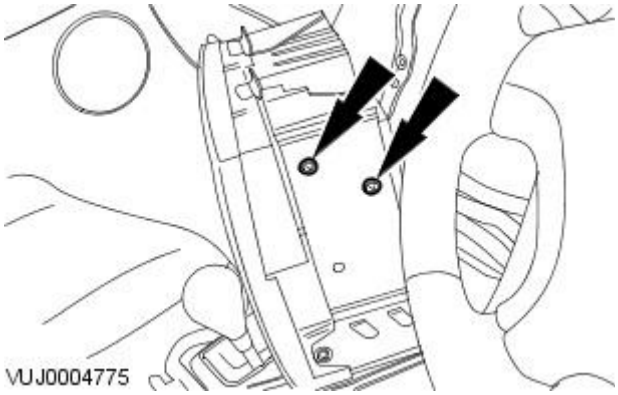

12. Remove the climate control assembly retaining screws.

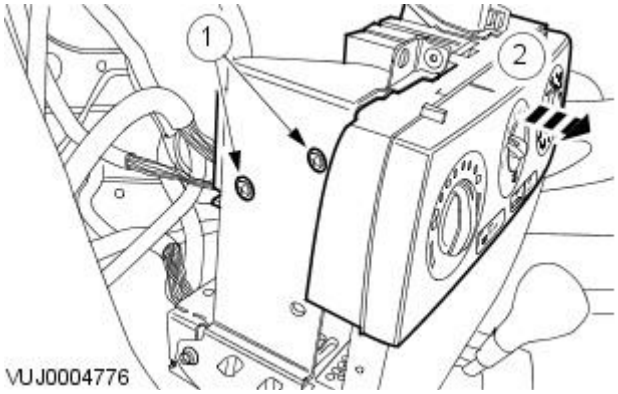

13. Remove the climate control assembly.

1. Remove the retaining screws.
2. Remove the climate control assembly.

Installation

1. NOTE: Make sure the climate control assembly is correctly located into the audio unit.

To install, reverse the removal procedure.

Control Components - Defrost Vent/Register Blend Door Actuator

Removal and Installation

Removal

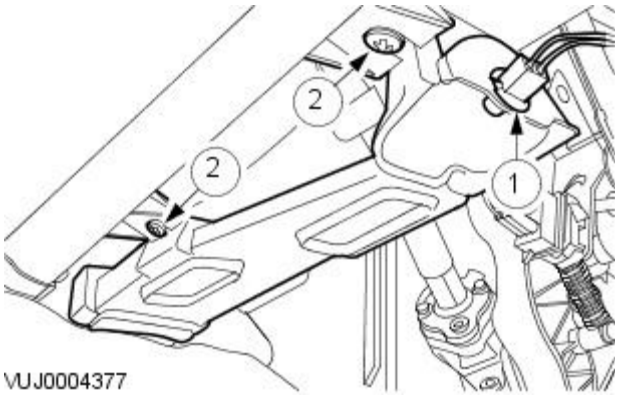

1. Remove the lower vent.

1. Detach the bulb holder.
2. Remove the lower vent.

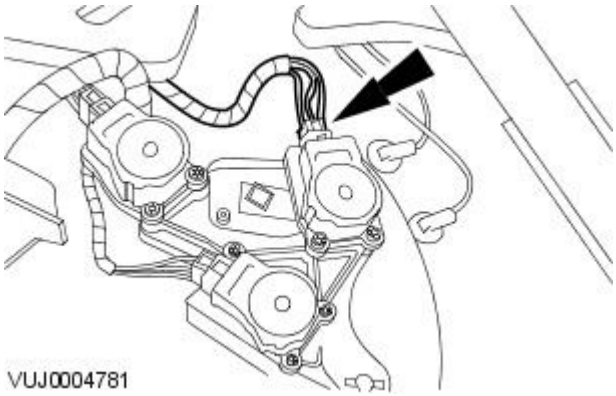

2. Disconnect the defrost vent/register blend door actuator electrical connector.

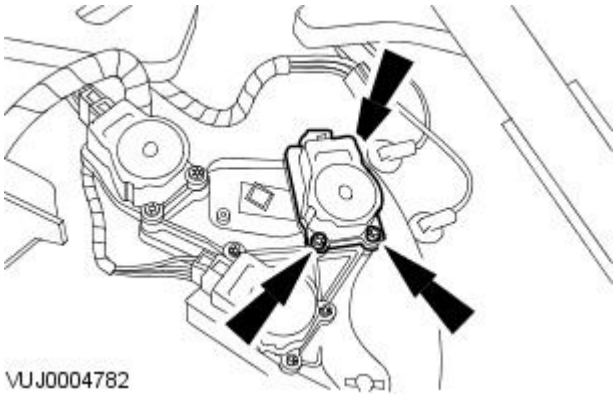

3. Remove the defrost vent/register blend door actuator.

- Remove the retaining screws.

Installation

1. To install, reverse the removal procedure.

Control Components - Footwell Vent / Duct Blend Door Actuator

Removal and Installation

Removal

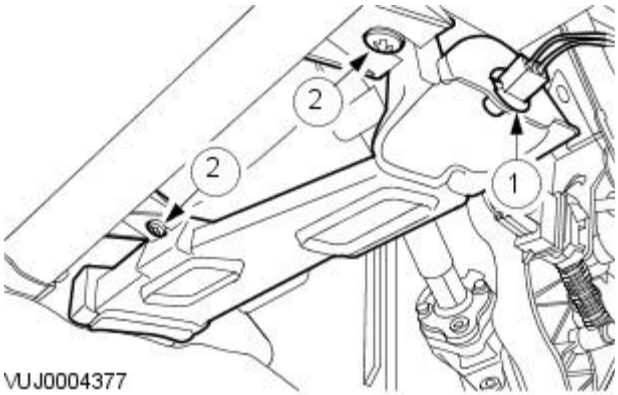

1. Remove the lower vent.

1. Detach the bulb holder.
2. Remove the lower vent.

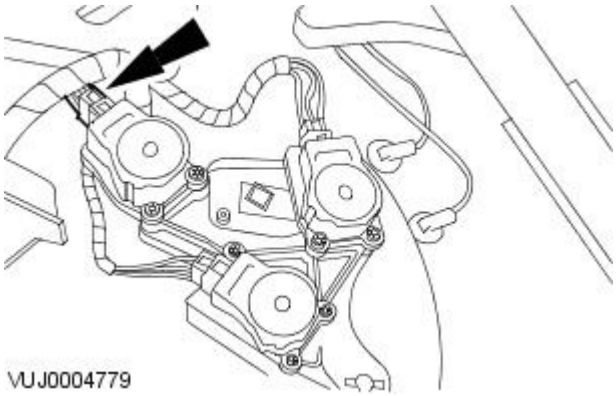

2. Disconnect the footwell vent/duct blend door actuator electrical connector.

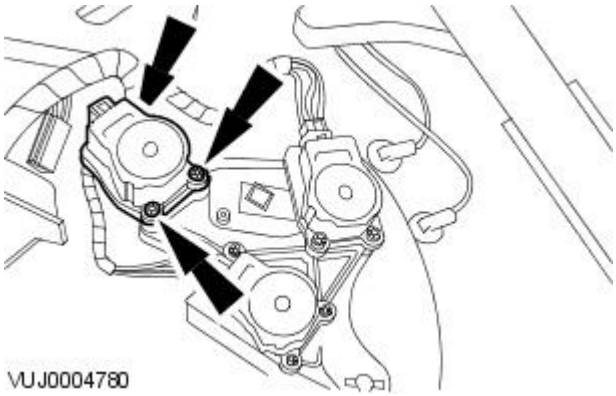

3. Remove the footwell vent/duct blend door actuator.

- Remove the retaining screws.

Installation

1. NOTE: Make sure the drive gear is fully meshed with the driven gear before tightening the retaining screws.

To install, reverse the removal procedure.

Control Components - Sunload Sensor

Removal and Installation

Removal

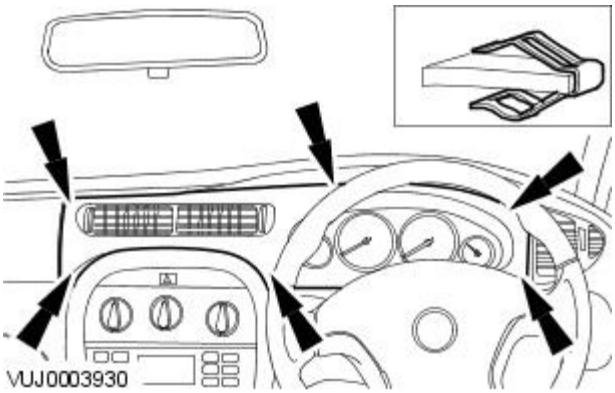

1. Remove the instrument cluster and vent finish panel.

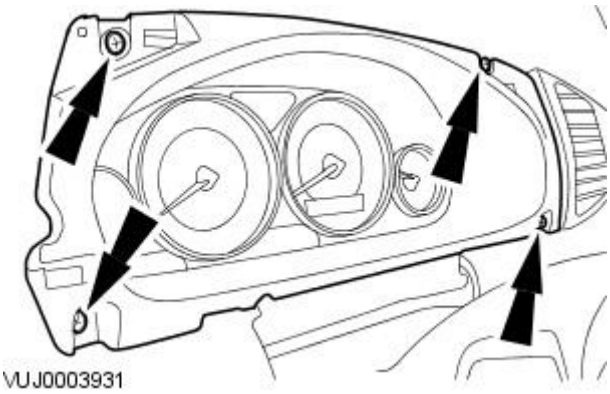

2. Remove the instrument cluster finish panel.

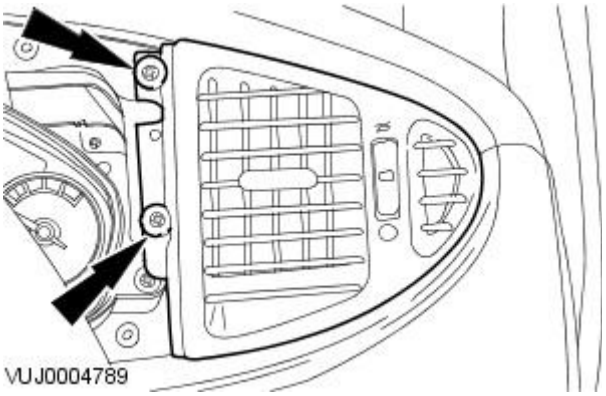

3. Remove the side air vent.

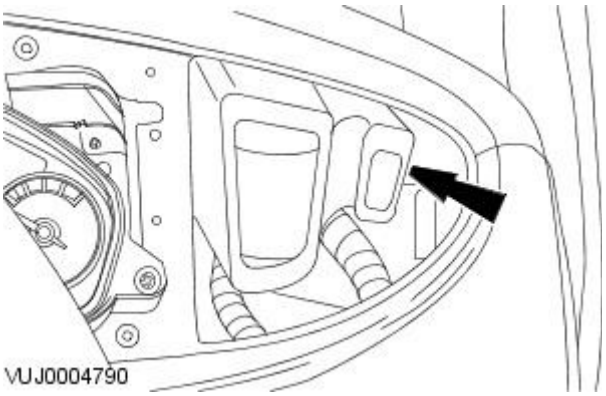

4. Disconnect the sunload sensor electrical connector.

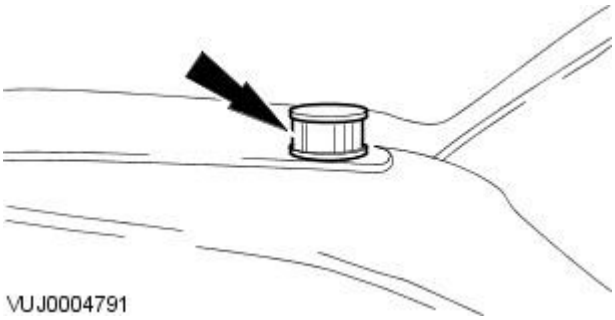

5. Remove the sunload sensor.

Installation

1. To install, reverse the removal procedure.

Control Components - Temperature Blend Door Actuator

Removal and Installation

Removal

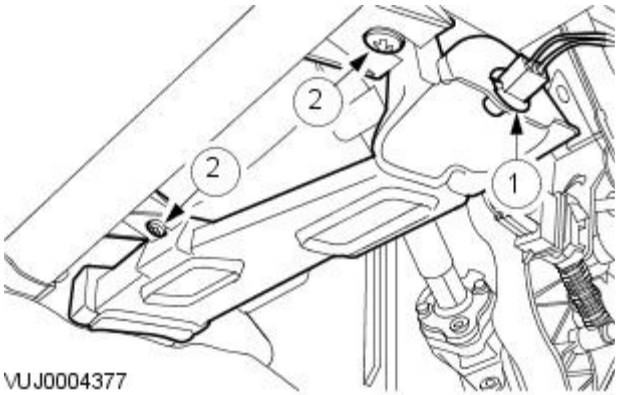

1. Remove the lower vent.

1. Detach the bulb holder.
2. Remove the lower vent.

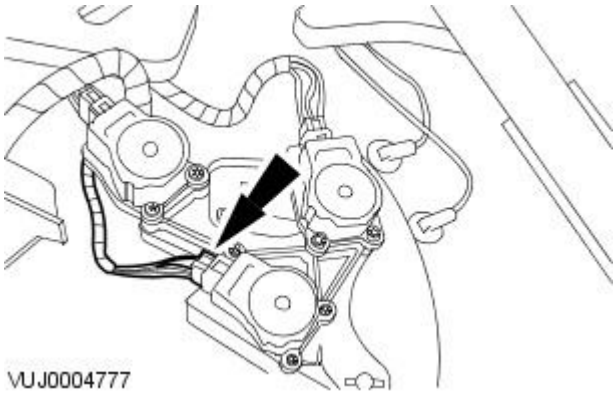

2. Disconnect the temperature blend door actuator electrical connector.

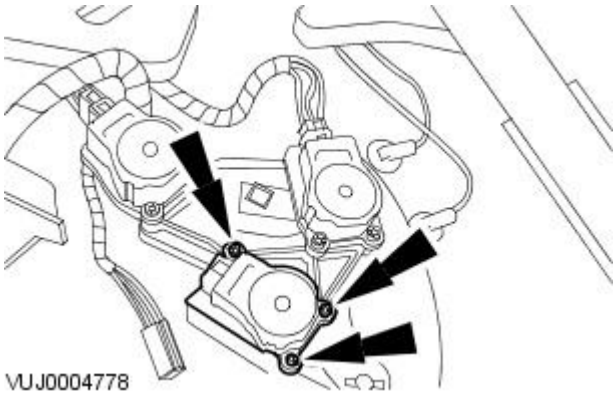

3. Remove the temperature blend door actuator.

- Remove the retaining screws.

Installation

1. To install, reverse the removal procedure.

Published: 11-May-2011

Instrument Cluster and Panel Illumination - Instrument Cluster and Panel Illumination

Diagnosis and Testing

The complexity of the electronics involved with the instrument cluster preclude the use of workshop general electrical test equipment. Therefore, reference should be made to the Jaguar Approved Diagnostic System for detailed instructions on testing the instrument cluster.

The Jaguar Approved Diagnostic System tests and analyses, in detail, all functions of the instrument cluster.

Where a fault involving the instrument cluster is indicated by the Jaguar Approved Diagnostic System, some basic diagnostic methods may be necessary to confirm that connections are good and that the wiring is not damaged, before installing new components.

1. **1.** Verify the customer concern by operating the system.
2. **2.** Visually inspect for obvious signs of mechanical or electrical damage.

Visual Inspection Chart

Mechanical	Electrical
• Fluid level(s) • Accessory installations	• Bulb(s)/LED(s) • Fuse(s) • Damaged or corroded wiring harness • Electrical connector(s) • Engine/engine compartment or underbody components • Instrument cluster

3. **3.** If an obvious cause for an observed or reported concern is found, correct the cause (if possible) before proceeding to the next step.
4. **4.** If the cause is not visually evident, verify the sympton and refer to the Jaguar Approved Diagnostic System.

Instrument Cluster - Instrument Cluster

Description and Operation

Vehicles With 2.0L, 2.5L And 3.0L Engines

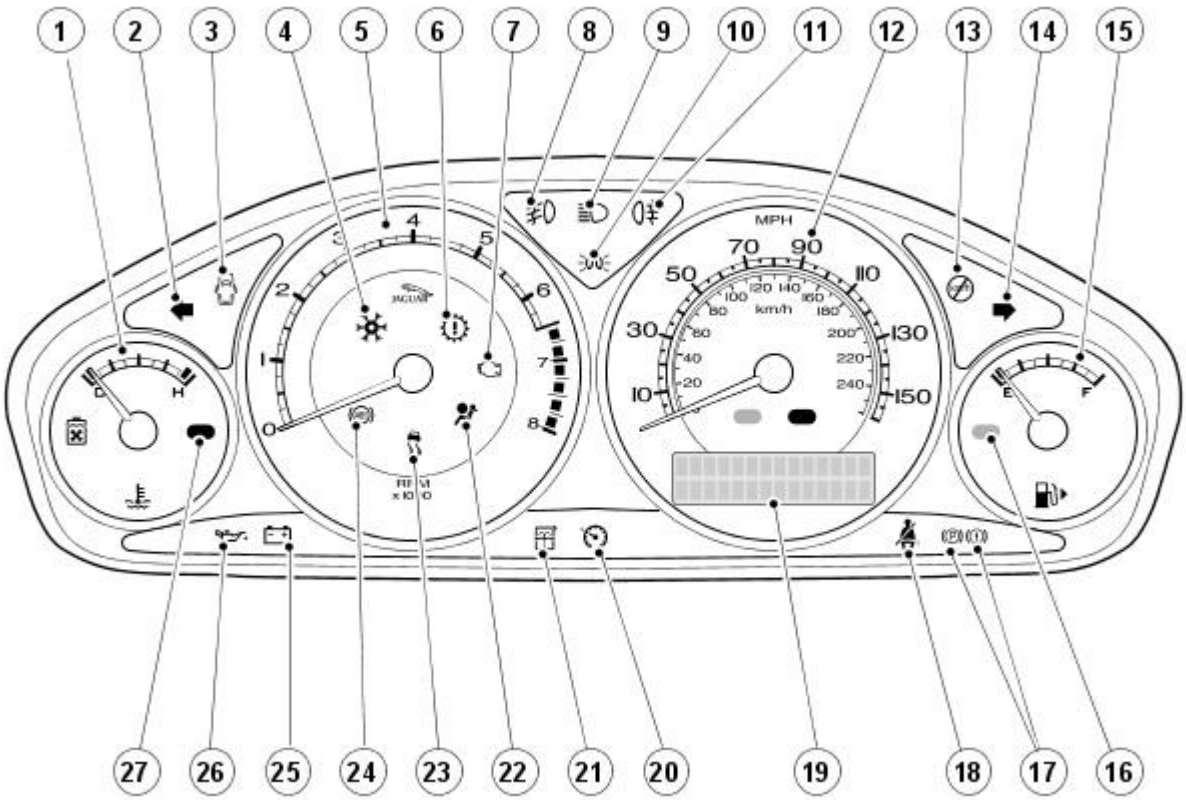

E45859

Item	Part Number	Description
1	—	Engine temperature gauge
2	—	Left hand direction indicator
3	—	Door ajar warning
4	—	Low exterior temperature warning
5	—	Tachometer
6	—	Powertrain malfunction
7	—	Engine malfunction
8	—	Front fog lamps
9	—	Main beam
10	—	Side (Parking) lamps
11	—	Rear fog lamps
12	—	Speedometer
13	—	Overspeed warning (Gulf coast countries only)
14	—	Right hand direction indicator
15	—	Fuel level gauge
16	—	Low fuel remainder lamp
17	—	Parking/Low brake fluid indicator/EBD system failure
18	—	Safety belt indicator
19	—	Trip odometer
20	—	Cruise (speed) control activated
21	—	Low washer fluid level
22	—	Airbag warning indicator
23	—	Traction control/Dynamic Stability Control (DSC) indicator
24	—	Anti-lock Brake System (ABS) warning indicator
25	—	Charge warning indicator
26	—	Oil pressure warning indicator
27	—	High engine temperature warning

Vehicles With 2.0L, 2.5L And 3.0L Engines

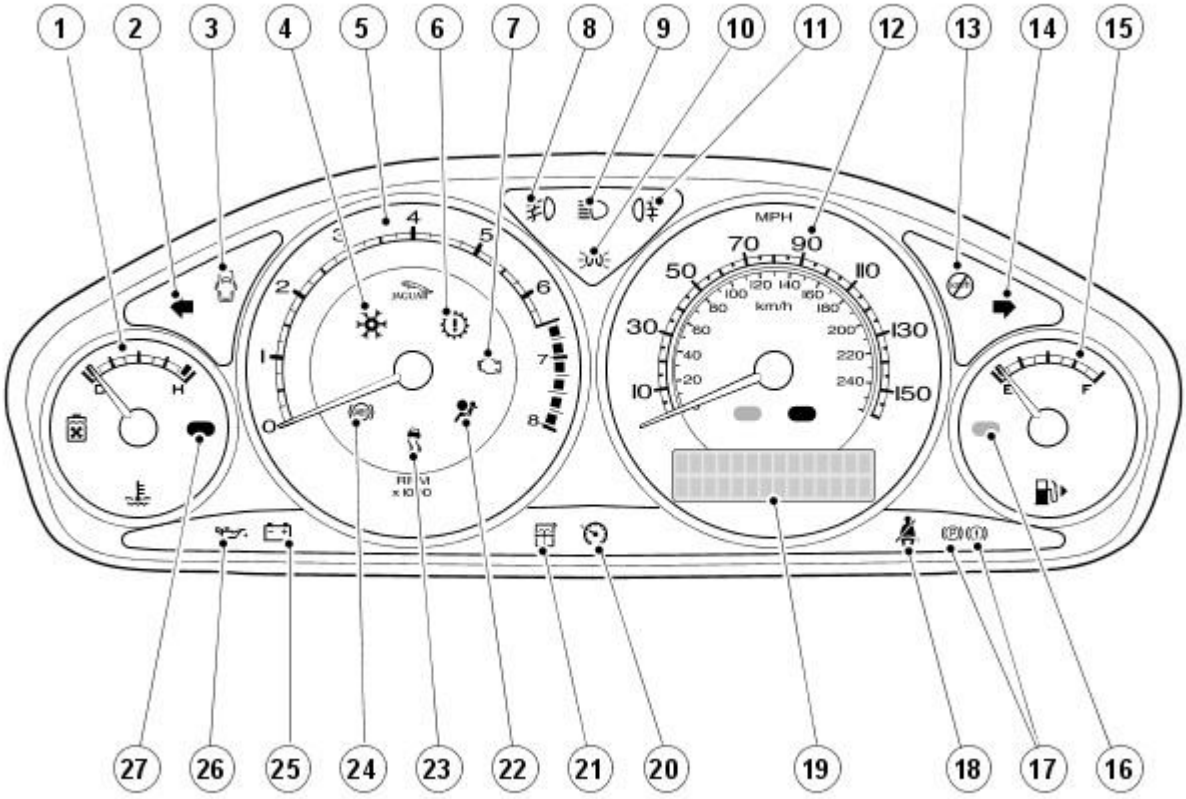

E45859

Item	Part Number	Description
1	—	Engine temperature gauge
2	—	Left hand direction indicator
3	—	Door ajar warning
4	—	Low exterior temperature warning
5	—	Tachometer
6	—	Powertrain malfunction
7	—	Engine malfunction
8	—	Front fog lamps
9	—	Main beam
10	—	Side (Parking) lamps
11	—	Rear fog lamps
12	—	Speedometer
13	—	Overspeed warning (Gulf coast countries only)
14	—	Right hand direction indicator
15	—	Fuel level gauge
16	—	Low fuel remainder lamp
17	—	Parking/Low brake fluid indicator/EBD system failure
18	—	Safety belt indicator
19	—	Trip odometer
20	—	Cruise (speed) control activated
21	—	Low washer fluid level
22	—	Airbag warning indicator
23	—	Traction control/Dynamic Stability Control (DSC) indicator
24	—	Anti-lock Brake System (ABS) warning indicator
25	—	Charge warning indicator
26	—	Oil pressure warning indicator
27	—	High engine temperature warning

Vehicles With 2.0L Diesel Engine

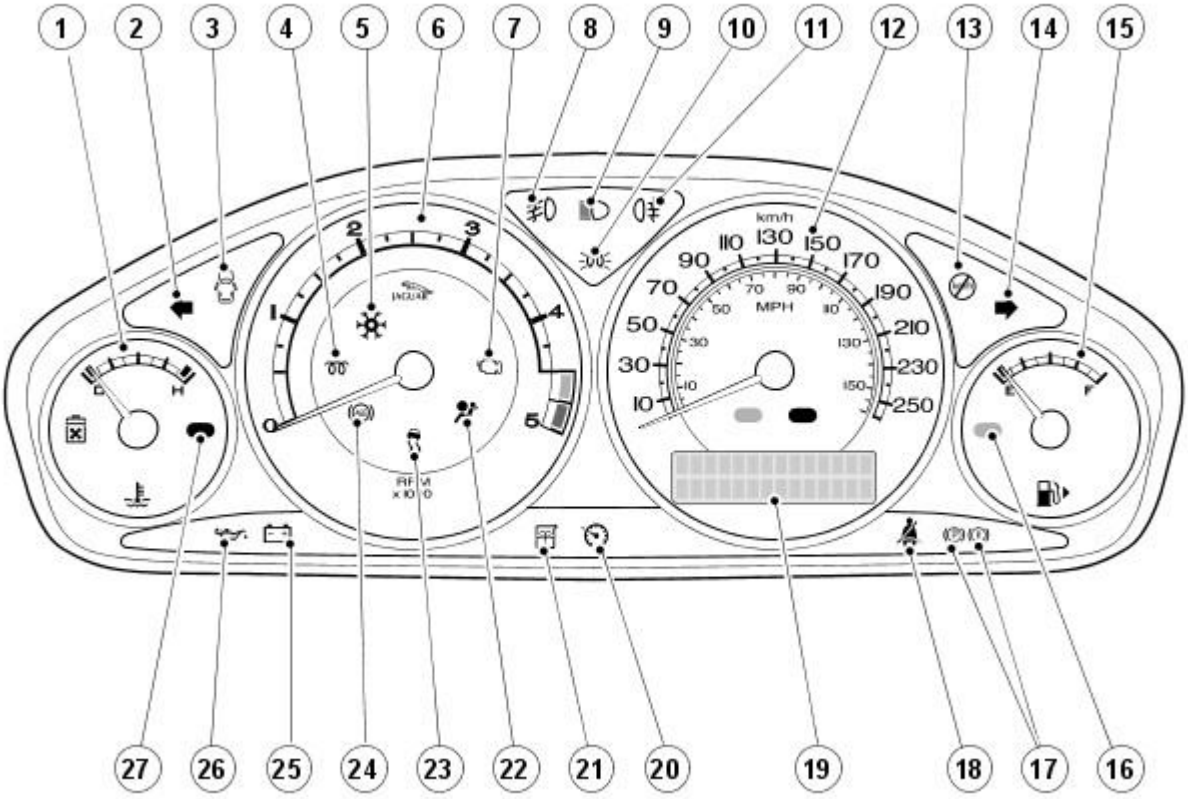

E45858

Item	Part Number	Description
1	—	Engine temperature gauge
2	—	Left hand direction indicator
3	—	Door ajar warning
4	—	Glow plug warning lamp
5	—	Low exterior temperature warning
6	—	Tachometer
7	—	Engine malfunction
8	—	Front fog lamps
9	—	Main beam
10	—	Side (Parking) lamps
11	—	Rear fog lamps
12	—	Speedometer
13	—	Overspeed warning (Gulf coast countries only)
14	—	Right hand direction indicator
15	—	Fuel level gauge
16	—	Low fuel remainder lamp
17	—	Parking/Low brake fluid indicator/EBD system failure
18	—	Safety belt indicator
19	—	Trip odometer
20	—	Cruise (speed) control activated
21	—	Low washer fluid level
22	—	Airbag warning indicator
23	—	Traction control/Dynamic Stability Control (DSC) indicator
24	—	Anti-lock Brake System (ABS) warning indicator
25	—	Charge warning indicator
26	—	Oil pressure warning indicator
27	—	High engine temperature warning

The instrument cluster provides the driver with information, indicators and warning indicators on the vehicle systems.

The gauges and warning indicators may use the outputs from common sensors to carry out their respective functions.

Instrument Cluster - Instrument Cluster

Diagnosis and Testing

Principle of Operation

For a detailed description of the instrument cluster, refer to the relevant Description and Operation sections in the workshop manual. REFER to: Instrument Cluster (413-01 Instrument Cluster, Description and Operation).

Inspection and Verification

The complexity of the electronics involved with the instrument cluster, preclude the use of workshop general electrical test equipment. Therefore, reference should be made to the approved Jaguar diagnostic system for detailed instructions on testing the instrument cluster circuits.

Where a fault involving the instrument cluster is indicated by the approved Jaguar diagnostic system, some basic diagnostic methods may be necessary to confirm that connections are good and that wiring is not damaged, before installing new component .

1. **1.** Verify the customer concern by operating the system.
2. **2.** Visually inspect for obvious signs of mechanical or electrical damage.

Visual Inspection

Mechanical	Electrical
• Engine oil filter • Oil pump • Engine oil level • Oil pressure switch • Engine coolant level • Coolant thermostat • Fuel gauge • Door adjustment	• Fuse(s) • Bulb(s) • LED(s) • Wiring harness • Electrical connector(s) • Sensor(s) • Instrument cluster • Instrument cluster printed circuit

3. **3.** If an obvious cause for an observed or reported concern is found, correct the cause (if possible) before proceeding to the next step.

   • NOTE: If all of the following systems are not operating correctly this may indicate a concern with the GEM. If one or more of the following systems operate correctly this may indicate an instrument cluster concern.

   3.

4. **4.** Verify the following systems are working correctly by operating the system.
   - Charging
   - Turn signals
   - Headlamps
5. **5.** If the concern is not visually evident, refer to the approved Jaguar diagnostic system for detailed instructions on testing the instrument cluster.

DTC Index

CAUTION: When probing connectors to take measurements in the course of the pinpoint tests, use the adaptor kit, part number 3548-1358-00

• NOTE: If the control module/component is suspect and the vehicle remains under manufacturer warranty, refer to the Warranty Policy and Procedures manual (section B1.2), or determine if any prior approval program is in operation, prior to the installation of a new module/component.

• NOTE: When performing voltage or resistance tests, always use a digital multimeter (DMM) accurate to three decimal places and with a current calibration certificate. When testing resistance, always take the resistance of the DMM leads into account.

• NOTE: Check and rectify basic faults before beginning diagnostic routines that involve pinpoint tests.

• NOTE: Inspect connectors for signs of water ingress, and pins for damage and/or corrosion.

• NOTE: If DTCs are recorded and, after performing the pinpoint tests, a fault is not present, an intermittent concern may be the cause. Always check for loose connections and corroded terminals.

DTC	Description	Possible Cause	Action
B1202	Fuel sender circuit failure	• Instrument cluster, fuel sender circuit open	Carry out any pinpoint tests associated with this DTC using the manufacturer approved diagnostic system. Refer to electrical circuit diagrams, notes and check the rear electronic module, fuel sender circuit for open circuit.
B1204	Fuel sender circuit short to ground	• Instrument cluster, fuel sender circuit short to ground	Carry out any pinpoint tests associated with this DTC using the manufacturer approved diagnostic system. Refer to electrical circuit diagrams, notes and check the rear electronic module, fuel sender circuit for short to ground.
B1205	EIC switch-1 assembly circuit failure	• Instrument cluster, auxiliary lighting switch pack - circuit fault	Refer to electrical circuit diagrams, notes and check instrument cluster, auxiliary lighting switch pack for circuit fault
B1213	Anti-theft number of programmed keys is below minimum	• Number of programmed keys below minimum (2 keys minimum)	Count number of stored keys using the manufacturer approved diagnostic system. Add keys as required.
B1317	Battery voltage high	• Instrument cluster, power supply voltage above high limit, generator voltage is regulated by the engine control module.	Refer to electrical circuit diagrams, notes, and check instrument cluster, power supply for voltage fault.

Instrument Cluster - Instrument Cluster

Removal and Installation

Removal

1. CAUTION: Do not leave the instrument cluster face down for any length of time.

Lower and extend the steering column to its maximum rearward position.

2. Disconnect the battery ground cable. For additional information, refer to Section 414-01 Battery, Mounting and Cables.

3. Remove the instrument cluster and vent finish panel.

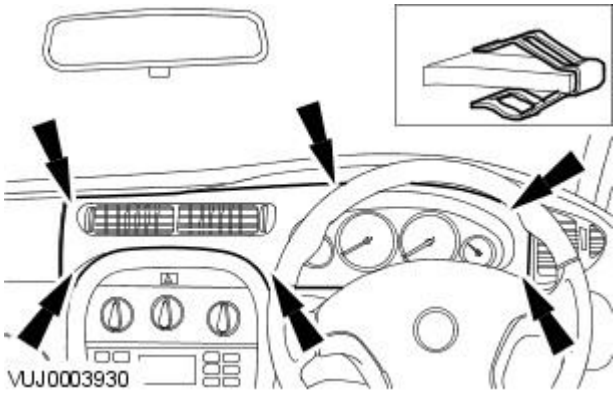

4. Remove the instrument cluster finish panel.

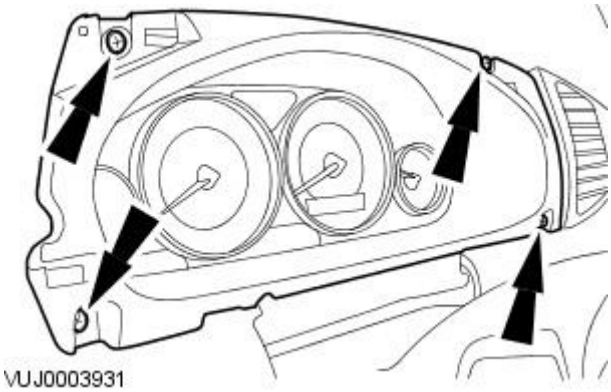

5. Detach the instrument cluster.

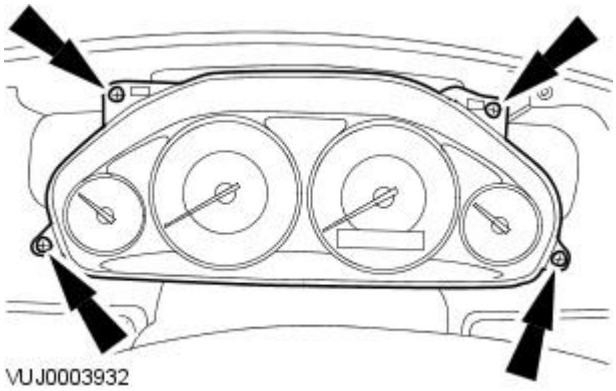

6. Remove the instrument cluster.

1. Detach the wiring harnesses.
2. Disconnect the electrical connectors.
3. Remove the instrument cluster.

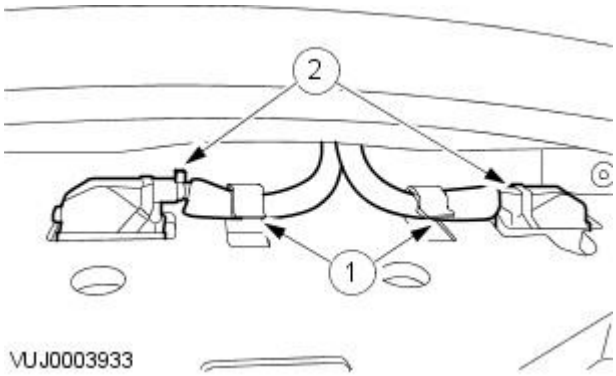

Installation

1. To install, reverse the removal procedure.

Horn - Horn

Description and Operation

Vehicles With 2.0L, 2.5L And 3.0L engines

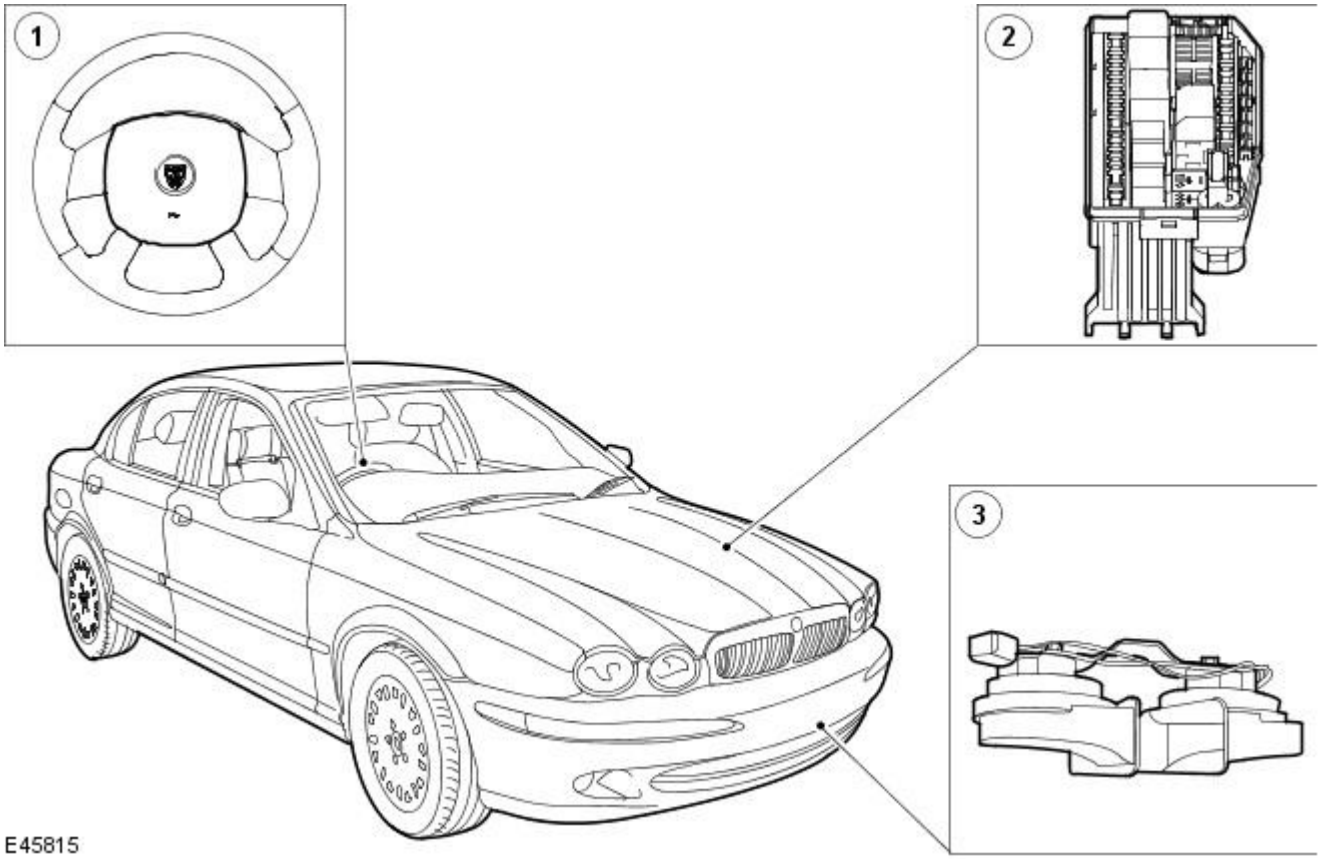

Item	Part Number	Description
1	—	Horn switch
2	—	Power distribution box
3	—	Horn

The horn system consists of the following:

- Power distribution box fuse 38 (20A)
- Power distribution box with integral relay
- Horn
- Air bag sliding contact
- Wiring harness
- Horn switch
- Generic electronic module

Vehicles with 2.0L Diesel Engine

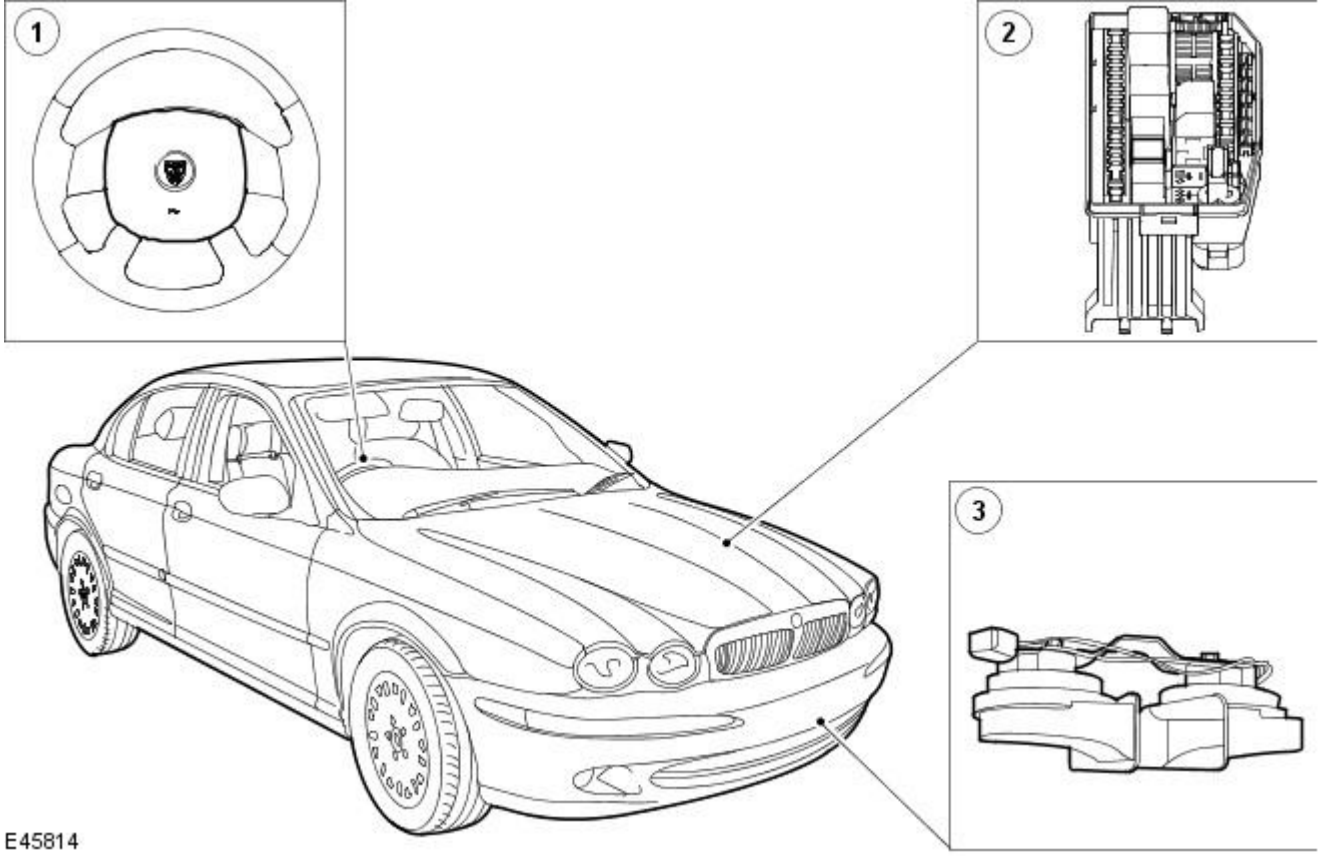

Item	Part Number	Description
1	—	Horn switch
2	—	Horn relay
3	—	Horn

The horn system consists of the following:

- Power distribution box fuse 3 (20A)
- Power distribution box relay 2
- Horn
- Air bag sliding contact
- Wiring harness
- Horn switch
- Generic electronic module

The horn system is designed to sound the horn when the horn switch is operated. The horn relay is supplied voltage at all times through power distribution box. Operating the horn switch provides a ground circuit to the coil side of the horn relay. In turn, the switch side of the horn relay is closed, allowing voltage to be supplied to the horn.

Published: 11-May-2011

Horn - Horn

Diagnosis and Testing

1. **1.** Verify the customer concern.
2. **2.** Visually inspect for obvious signs of mechanical or electrical damage.

Visual Inspection Chart

Mechanical	Electrical
• Switch • Horn • Relay(s)	• Fuse(s) • Electrical connector(s) • Damaged or corroded Wiring harness

3. **3.** If an obvious cause for an observed or reported concern is found, correct the cause (if possible) before proceeding to the next step.
4. **4.** If the cause is not visually evident, verify the symptom and refer to the Jaguar Approved Diagnostic System.

Horn - Horn

Removal and Installation

Removal

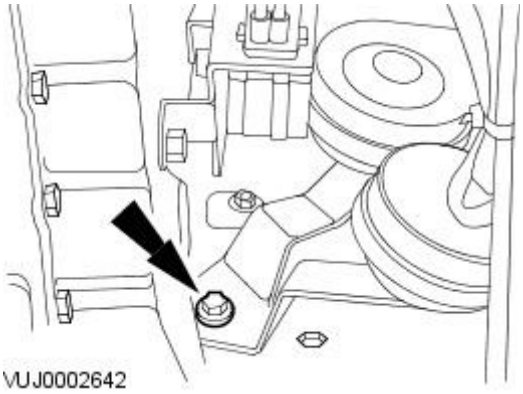

1. Raise and support the vehicle. For additional information, refer toSection 100-02 Jacking and Lifting.
2. Detach the horn.

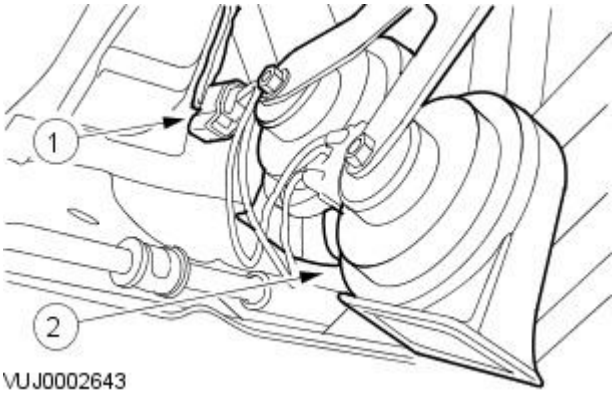

3. Remove the horn.
    1. Disconnect the horn electrical connector.
    2. Remove the horn.

Installation

1. To install, reverse the removal procedure.

Horn - Horn Switch

Removal and Installation

Removal

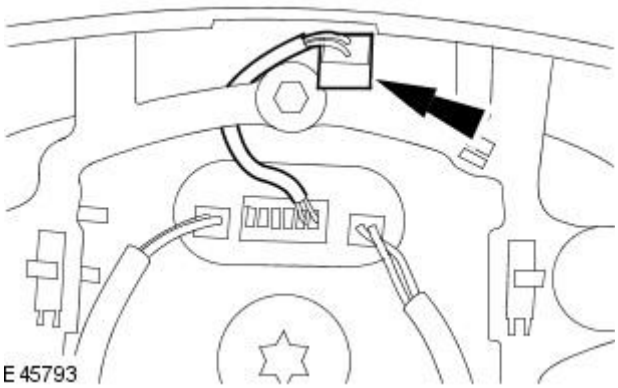

1. Remove the driver air bag module.
   For additional information, refer to: Driver Air Bag Module (501-20B Supplemental Restraint System, Removal and Installation).
2. Disconnect the horn switch electrical connector.

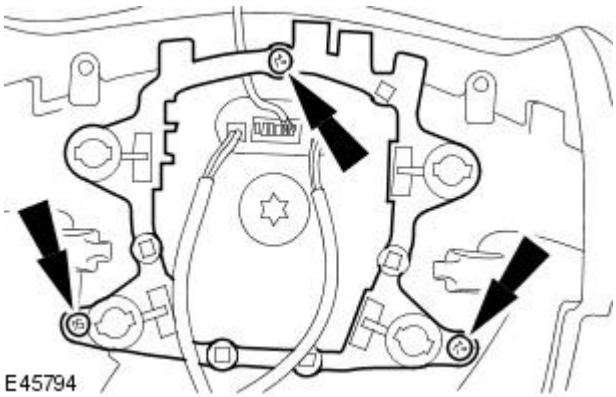

3. Remove the horn switch.
   - Remove the horn switch retaining screws.

Installation

1. To install, reverse the removal procedure.

Information and Message Center - Information and Message Center

Description and Operation

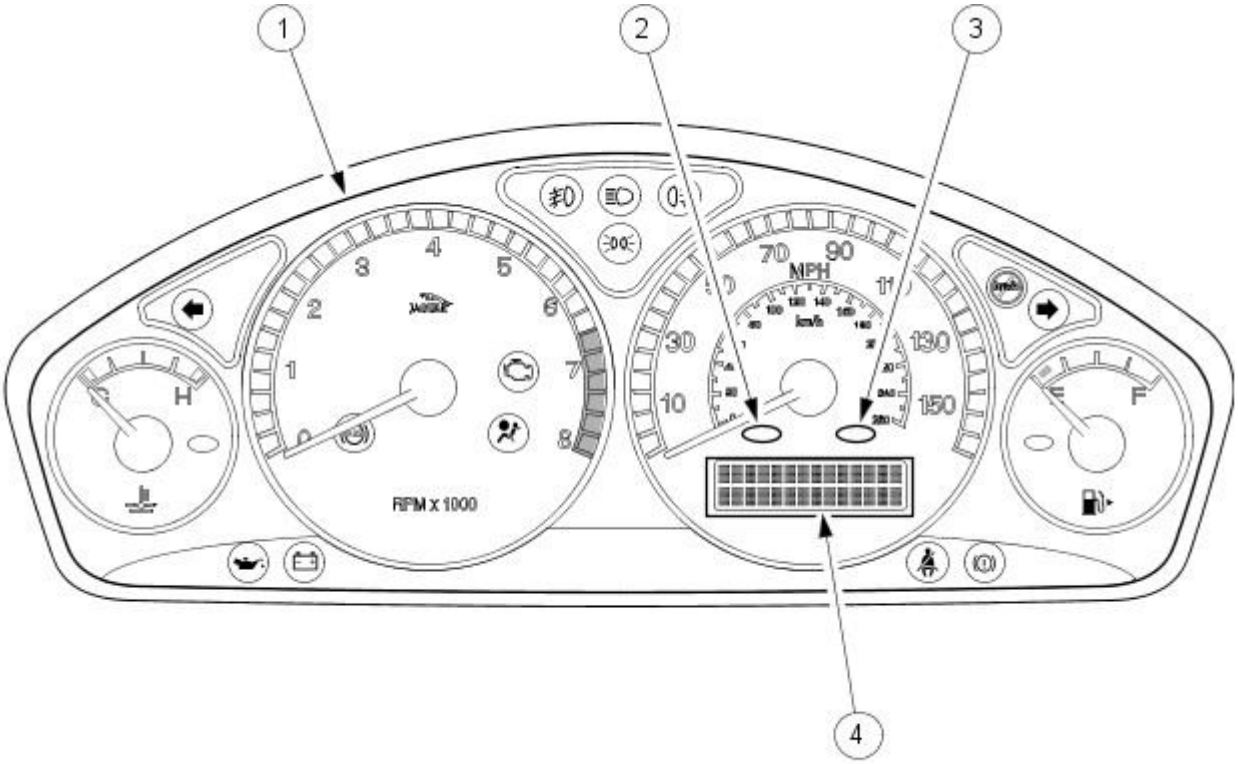

VUJ0003855

Item	Part Number	Description
1	—	Instrument Cluster
2	—	Red Warning Lamp
3	—	Amber Warning Lamp
4	—	Driver's Information/Message Center

The driver's information/message center has a dot matrix LCD (liquid crystal display) and is located in the lower area of the speedometer.

The message center displays messages in text form for the driver, including odometer readings and trip computer data. It can also provide information normally covered by conventional warning lamps or typically indicate that a feature such as the cruise control is operating.

Located above the message center are two lamps, red for warning and amber for caution. When a message is displayed, the appropriate lamp will illuminate to attract the driver's attention and to signify the importance of the message.

On 2.2L Diesel vehicles from 2009MY using the AW F21 transmission, when 'Sport' mode is selected using the selector lever, 'S' is displayed and when in Jaguar Sequential Shift mode the selected gear (1, 2, 3, 4, 5, or 6) is displayed.

Trip Computer

The trip computer can be accessed by pressing the trip computer button located on the end of the LH (left-hand) steering column multifunction switch. Pressing the trip button displays trip data on the message center. Warning and information messages have priority over trip data. If a driver information message is displayed prior to activation of the trip computer, the trip data will appear for 10 seconds only, before being replaced by the original message.

Each successive press of the trip button causes the computer to continually cycle through the stored data which is then displayed on the message center.

The trip computer button is only enabled while the trip computer output is displayed. Refer to the Drivers Handbook for full operating instructions.

Service Interval Indicator - Vehicles with Diesel Particulate Filter (DPF)

The Service Interval Indicator informs the driver that the engine requires an engine oil change due to excessive build-up of fuel within the engine oil. This is due to the Diesel Particulate Filter (DPF) regeneration process where additional fuel quantities are added to increase exhaust gas temperatures. As a result small quantities of unburnt fuel remain in the combustion chamber and bypass the piston rings into the engine oil.

The amount of excessive fuel is calculated by the ECM (engine control module). The ECM monitors the engine operating conditions and the values from the exhaust gas temperature sensor during the DPF regeneration process and calculates the amount of fuel in the oil. If the fuel content exceeds the permitted level, the ECM will illuminate the service interval indicator in the instrument cluster message center.

After the engine oil has been changed, a service indicator reset procedure must be carried out.
For additional information, refer to: Oil Change Indicator Reset (413-09 Warning Devices, General Procedures).

Information and Message Center - Information and Message Center

Diagnosis and Testing

Inspection and Verification

1. **1.** Verify the customer concern.
2. **2.** Visually inspect for obvious signs of electrical damage.

Visual Inspection Chart

Electrical
• Fuse(s) • Electrical connector(s) • Damaged or corroded wiring harness • Engine/engine compartment or underbody components • Instrument cluster

3. **3.** If an obvious cause for an observed or reported concern is found, correct the cause (if possible) before proceeding to the next step.
4. **4.** If the cause is not visually evident, verify the symptom and refer to the Jaguar Approved Diagnostic System.

Information and Message Center - Message Center

Removal and Installation

1. The information and message center is built integral to the speedometer. For additional information, refer to Section 413-01 Instrument Cluster.

Information and Message Center - Message Center Switch

Removal and Installation

1. The trip computer switch is built integral to the headlamp switch. For additional information, refer to Section 417-01 Exterior Lighting.

Warning Devices - Warning Devices

Description and Operation

4-door

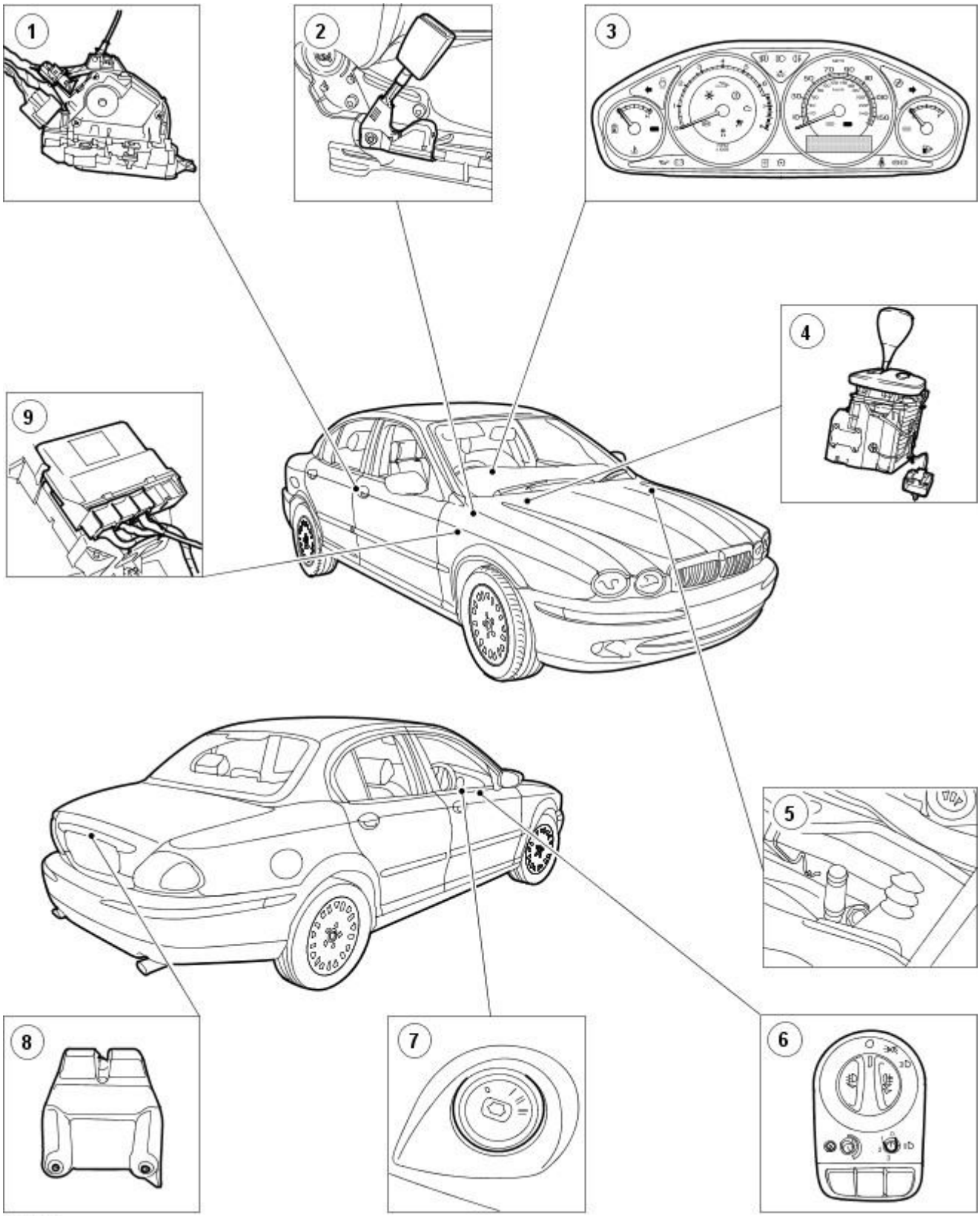

E48971

Item	Part Number	Description
1	—	Door actuator
2	—	Safety belt buckle
3	—	Instrument cluster
4	—	J Gate (Automatic only)
5	—	Engine compartment switch - visual warning only
6	—	Headlamp switch
7	—	Ignition switch
8	—	Luggage compartment switch - visual warning only
9	—	Generic electronic module (GEM)

Wagon

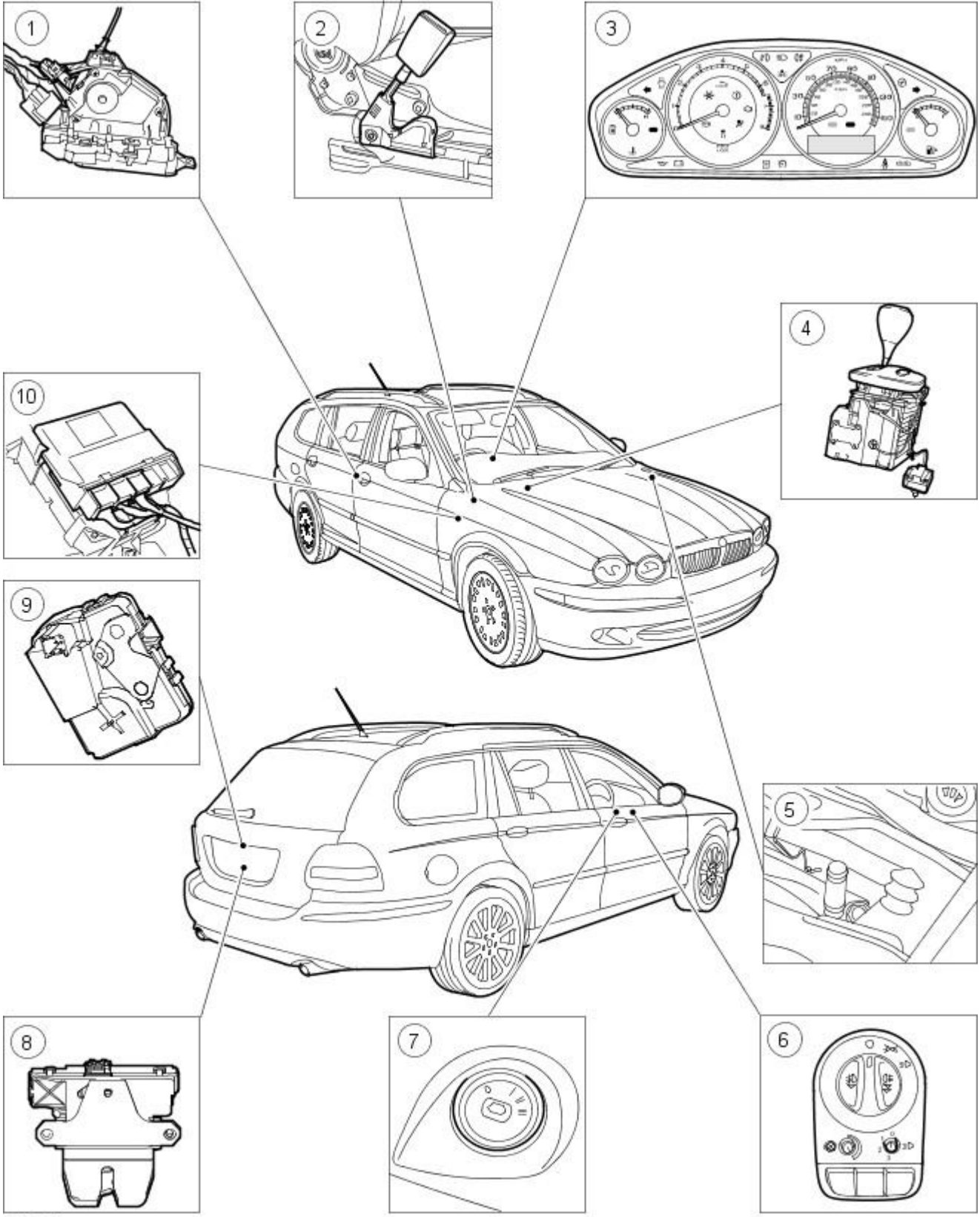

E49681

Item	Part Number	Description
1	—	Door actuator
2	—	Safety belt buckle
3	—	Instrument cluster
4	—	J Gate (Automatic only)
5	—	Engine compartment switch - visual warning only
6	—	Headlamp switch
7	—	Ignition switch
8	—	Liftgate switch - visual warning only
9	—	Liftgate window glass switch - visual warning only
10	—	Generic electronic module (GEM)

The driver warning chime provides the driver with an audible warning:

- when the key is in the ignition and the driver door is open (North American vehicles only).
- when the headlamps are on and the driver door is open with the ignition off.
- when the engine is running and the safety belt is not engaged (driver side only).

The driver will also be provided with a visual warning or visual message displayed in the information message center (if fitted). The system uses a number of inputs to provide the driver with audible and visual warnings.

Instrument Cluster

The instrument cluster acts as a system monitor for the visual warnings. It receives inputs from switches and sensors directly or through the multiplex link from another module and triggers the necessary visual warning

Ignition Switch Lock Cylinder (North America Only)

A warning chime will sound continuously when the driver door is open and the key is in the ignition, on removal of the key the warning will cease. The switch is an integral part of the ignition lock cylinder and therefore can only be installed with the lock cylinder.

Door Ajar Switches

The door ajar switches (within the latch) activate the system to provide a visual warning when the ignition is in the RUN position and any of the doors are open/ajar.

Luggage Compartment Switch - 4 Door Vehicles

The luggage compartment switch activates the system to provide a visual warning when the ignition is in the RUN position and the luggage compartment is open/ajar.

Liftgate Switch - Wagon

The liftgate switch (within the liftgate latch) activates the system to provide a visual warning when the ignition is in the RUN position and the liftgate is open/ajar.

Liftgate Opening Window - Wagon

The liftgate opening window switch (within the liftgate window glass latch) activates the system to provide a visual warning when the ignition is in the RUN position and the liftgate window glass is open/ajar.

Engine Compartment Switch

The engine compartment switch activates the system to provide a visual warning when the ignition is in the RUN position and the hood is open/ajar.

Headlamp Switch

A warning chime will sound continuously when the driver door is open/ajar and the vehicle lamps are on. This warning is provided only with the ignition off and will cease after 30 minutes, when the lamps are switched off or when the door is closed.

Safety Belt Switch (North America, Japan, Mexico and Dominican Republic Only)

A warning chime will sound continuously for approximately six seconds when the driver turns the ignition to the RUN position and the safety belt is not engaged. The warning chime will cease if the safety belt is engaged. The switch is an integral part of the driver safety belt buckle and therefore can only be installed with a safety belt buckle. A visual warning will also be provided on the instrument cluster.

Cooling Over Temperature

Engine temperatures above 120°C activate the system to provide a visual warning in the instrument cluster. The temperature warning light is illuminated constantly and a HIGH ENGINE TEMPERATURE is displayed in the message center (if fitted).

Air Bag Malfunction Chime

If a fault is detected with the air bag visual indication circuit five short warning chimes will be generated and repeated five times. This sequence is repeated every 30 minutes.

J Gate (Automatic vehicles only)

A warning chime will sound if the J Gate selector is not in PARK and the ignition is turned from RUN to ACC. The chime continues for 10 seconds or until the selector is placed in PARK.

Published: 11-May-2011

Warning Devices - Warning Devices

Diagnosis and Testing

The complexity of the electronics involved with the instrument cluster and general electronic module (GEM), of which the message center is a part, and the multiplexed communication network which are connected to it preclude the use of workshop general electrical test equipment. Therefore, reference should be made to the Jaguar Approved Diagnostic System for detailed instructions on testing the message center.

The Jaguar Approved Diagnostic System tests and analyses, in detail, all functions of the message center.

Where a fault involving the message center is indicated by the Jaguar Approved Diagnostic System, some basic diagnostic methods may be necessary to confirm that connections are good and that the wiring is not damaged, before installing new components.

1. **1.** Verify the customer concern by operating the system.
2. **2.** Visually inspect for obvious signs of mechanical or electrical damage.

Visual Inspection Chart

Mechanical	Electrical
Safety belt buckle and pretensioner	Fuse(s)
Headlamp switch	Wiring harness
Fuel gauge	Electrical connector(s)
	Switch(es)
	Sensor(s)

3. **3.** If an obvious cause for an observed or reported concern is found, correct the cause (if possible) before proceeding to the next step.
4. **4.** If the cause is not visually evident, verify the symptom and refer to the Jaguar Approved Diagnostic System.

Warning Devices - Oil Change Indicator Reset

General Procedures

1. NOTE: Steps 2 to 5 must be completed within 3 seconds for successful service mode resetting.

• NOTE: Ignition key in the **OFF** position.

Press and hold down the trip computer **RESET** button.

2. Continue to hold down the trip computer **RESET** button and turn the ignition switch to the **ON** position.

3. Release the trip computer **RESET** button.

4. Press and hold down the trip computer **TRIP** button located on the left-hand steering column multifunction switch.

5. Continue to hold down the trip computer **TRIP** button and press and hold down the trip computer **RESET** button.

6. Continue to hold down the trip computer **TRIP** and **RESET** buttons, **RESETTING SERVICE MODE** will display in the information and message center if steps 2 to 5 are completed successfully.

7. After 10 seconds the information and message center will then display **SERVICE MODE RESET** once the process is complete.

8. NOTE: If the information and message center does **NOT** display **SERVICE MODE RESET**, steps 1 to 8 must be repeated.

Release the trip computer **TRIP** and **RESET** buttons and turn the ignition switch to the **OFF** position.

Warning Devices - Low Washer Fluid Warning Indicator Switch

Removal and Installation

Removal

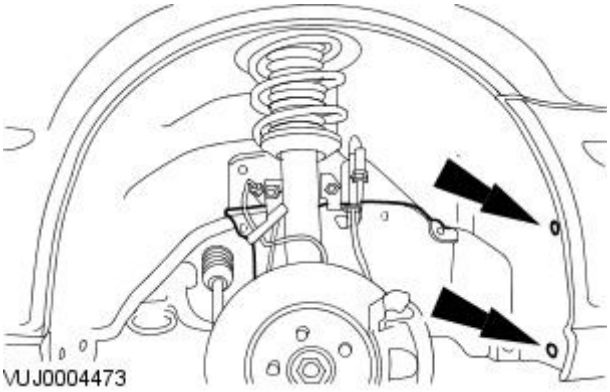

1. Remove the wheel and tire. For additional information, refer to Section 204-04 Wheels and Tires.
2. Detach the wheel arch liner.

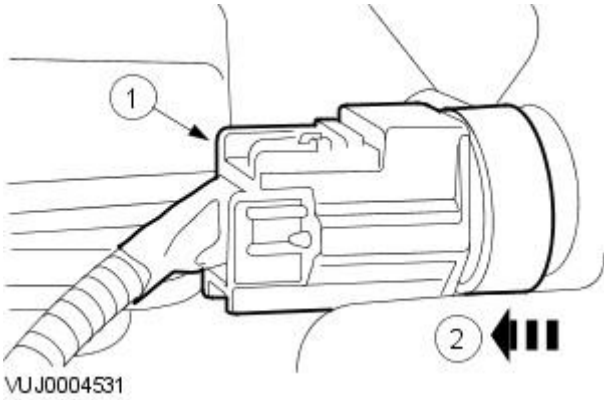

3. Remove the reservoir fluid level switch.
    1. Disconnect the reservoir fluid level electrical connector.
    2. Remove the reservoir fluid level switch.

Installation

1. To install, reverse the removal procedure.

Parking Aid - Parking Aid

Description and Operation

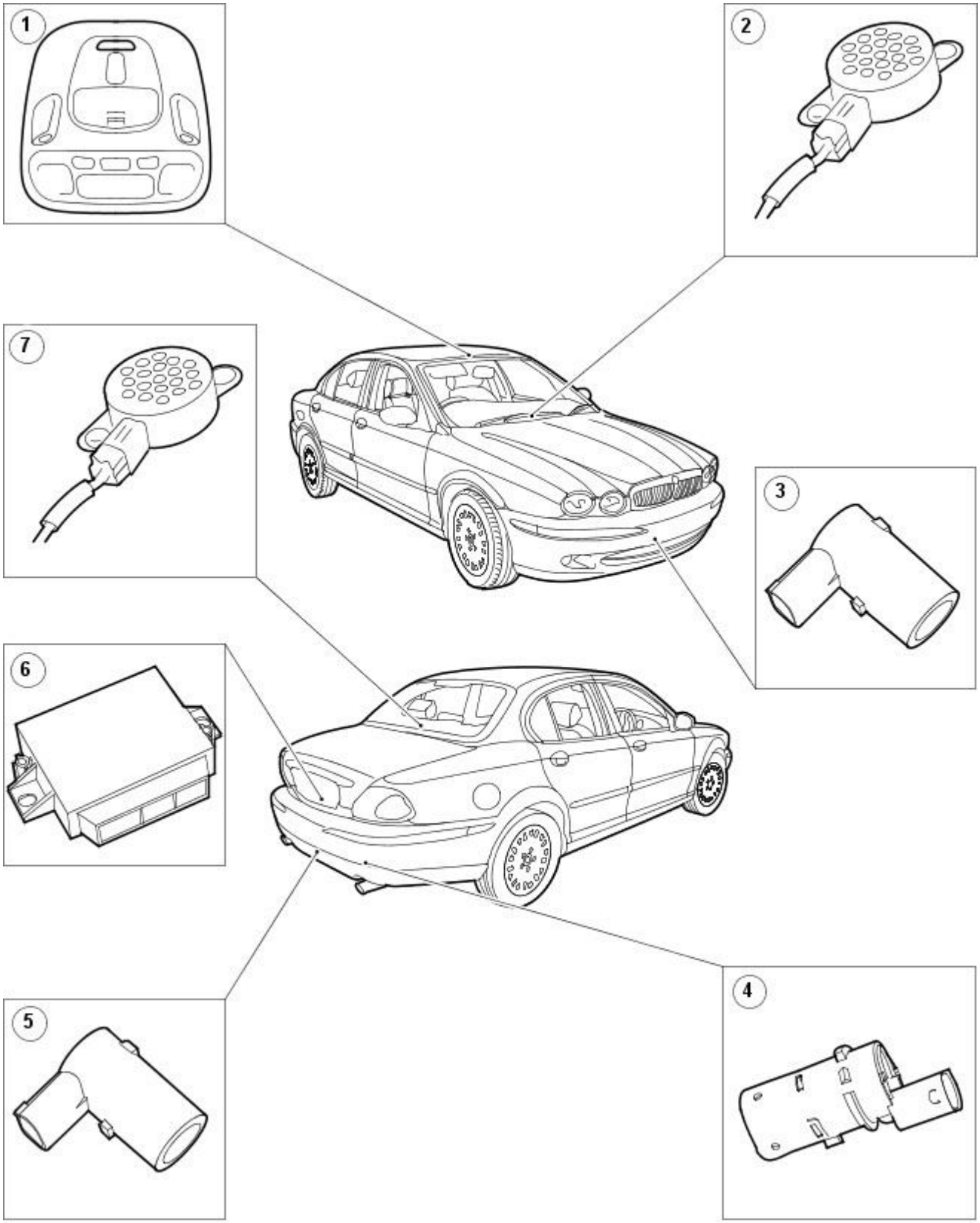

E48680

Item	Part Number	Description
1	—	Parking aid switch
2	—	Front parking aid speaker
3	—	Front parking aid sensor
4	—	Rear outer parking aid sensor
5	—	Rear centre parking aid sensor
6	—	Parking aid module
7	—	Rear parking aid speaker

The function of the parking aid is to provide an audible warning to the driver of the distance to obstacles near the bumpers of the vehicle when parking. The system provides an assistance to the driver when parking in order to help avoid collision with obstacles.

The sensor range at the rear of the vehicle is 1.8 meters (5.9 ft). This extends the full width of the rear bumper and reduces to 0.6 meters (2 ft.), at the vehicle corners. The vertical range is adequate to protect the highest and lowest points of the vehicle. The system will detect curbs with heights of at least 18 cm (7.1 inches). Obstacles, such as curbs, that are low enough to pass under the vehicle until they make contact with the tires will not be detected.

The sensor range at the front of the vehicle is 0.8 meters (2.6 ft). This extends the full width of the front bumper and reduces to 0.6 meters

(2 ft), at the vehicle corners. The vertical range is adequate to protect the highest and lowest points of the front of the vehicle. The system will detect curbs with heights of at least 18 cm (7.1 inches). Obstacles, such as curbs, that are low enough to pass under the vehicle until they make contact with the tires will not be detected.

The system activates a specific speaker at the front or the rear of the vehicle with a tone signifying the distance to the obstacle. The tone consists of a beep and defined space ratio which varies depending on the calculated distance. When the distance to the obstacle is less than 20 cm (7.8 inches) the speaker tone is continuous.

The parking aid system comprises of:

- a module mounted in the spare wheel well just rearward of the spare tire.
- four rear bumper mounted sensors of which the two inner sensors have a 90° angled electrical connector, and the two outer sensors have a straight electrical connector plug.
- four front bumper mounted sensors all with a 90° angled electrical connector.
- two audible speakers, the rear mounted on the rear parcel shelf on 4-door vehicles or behind the left hand loadspace trim on wagon, and the front mounted above the audio unit.
- a cancellation switch that is mounted into the roof console. This is fitted for the driver to disable the system when in slow moving traffic. This stops the front parking aid continuously monitoring the vehicle in front.

• NOTE: On vehicles from 2009MY, smaller parking aid sensors are fitted in the rear bumper. There is no change to system functionality.

The overhead console switch contains a Light Emitting Diode (LED) to inform the driver of the system status:

- LED **ON** - System Active
- LED **OFF** - System Inactive
- LED **FLASHING** - System Fault

The reverse parking aid is active when reverse gear is selected, unless towing (with a Jaguar approved towbar) when the system automatically switches off. If the parking aid system develops a fault the tone will sound continuously for three seconds when the ignition is switched on or when the reverse gear is selected, and the overhead console switch LED will flash.

The front parking aid remains inactive after the ignition is switched to the **ON** position until the overhead console switch is pressed or reverse gear is selected. The system will then remain active up to 15 kph (9.5 mph) in a forward gear, or until the overhead console switch is pressed. The front parking aid system becomes inactive if the overhead console switch is pressed while the system is active, or at all forward speeds above 15 kph (9.5 mph).

Parking Aid - Parking Aid

Diagnosis and Testing

Principle of Operation

For a detailed description of the parking aid, refer to the relevant Description and Operation sections in the workshop manual. REFER to: Parking Aid (413-13 Parking Aid, Description and Operation).

Parking Aid

1. **1.** Verify the customer concern.
2. **2.** Visually inspect for obvious signs of mechanical or electrical damage.

Visual Inspection Chart

Mechanical	Electrical
• Relay(s) • Speaker • Reverse lamp switch • Obstructions or damage to the sensors • Parking sensor face obstructed (e.g. snow, ice, dirt, flies etc)	• Electrical connector(s) • Damaged or corroded wiring harness • Sensor(s) • Parking aid module

3. **3.** If an obvious cause for an observed or reported concern is found, correct the cause (if possible) before proceeding to the next step.
4. **4.** If the cause is not visually evident, verify the symptom and refer to the Jaguar Approved Diagnostic System.

DTC Index

DTC Index

CAUTION: When probing connectors to take measurements in the course of the pinpoint tests, use the adaptor kit, part number 3548-1358-00

• NOTE: When performing voltage or resistance tests, always use a digital multimeter (DMM) accurate to three decimal places and with a current calibration certificate. When testing resistance, always take the resistance of the DMM leads into account.

• NOTE: If the control module/component is suspect and the vehicle remains under warranty, refer to the warranty policy and procedures manual (section B1.2) or determine if any prior approval program is in operation, prior to the installation of a new module/component.

• NOTE: Check and rectify basic faults before beginning diagnostic routines involving pinpoint tests.

• NOTE: If DTCs are recorded and, after performing the pinpoint tests, a fault is not present, an intermittent concern may be the cause. Always check for loose connections and corroded terminals.

DTC	Description	Possible Cause	Action
C1699	Left Rear Outer Sensor Circuit Short to Vbat	• Wiring harness concern	Refer to electrical circuit diagrams. Check if data line is short circuit to power. Repair wiring harness using approved methods and materials, clear DTC and retest system to confirm correct operation.
C1700	Left Rear Outer Sensor Circuit Failure or Blockage	• Wiring harness concern	Refer to electrical circuit diagrams. Check if data line is open circuit or short circuit to ground. Repair wiring harness using approved methods and materials, clear DTC and retest system to confirm correct operation.
C1701	Left Rear Outer Sensor Circuit Fault	• Sensor fault	Check sensor for correct mounting and cleanliness, renew sensor as required. Clear DTC and retest system to confirm correct operation.
C1702	Right Rear Outer Sensor Circuit Short to Vbat	• Wiring harness concern	Refer to electrical circuit diagrams. Check if data line is short circuit to power. Repair wiring harness using approved methods and materials, clear DTC and retest system to confirm correct operation.
C1704	Right Rear Outer Sensor Circuit Fault	• Sensor fault	Check sensor for correct mounting and cleanliness, renew sensor as required. Clear DTC and retest system to confirm correct operation.
C1705	Left Rear Center Sensor Circuit Short to Vbat	• Wiring harness concern	Refer to electrical circuit diagrams. Check if data line is short circuit to power. Repair wiring harness using approved methods and materials, clear DTC and retest system to confirm correct operation.
C1706	Left Rear Center Sensor Circuit Failure	• Wiring harness concern	Refer to electrical circuit diagrams. Check if data line is open circuit or short circuit to ground. Repair wiring harness using approved methods and materials, clear DTC and retest system to confirm correct operation.
C1707	Left Rear Center Sensor Circuit Fault	• Sensor fault	Check sensor for correct mounting and cleanliness, renew sensor as required. Clear DTC and retest system to confirm correct operation.
C1708	Right Rear Center Sensor Circuit Short to Vbat	• Wiring harness concern	Refer to electrical circuit diagrams. Check if data line is short circuit to power. Repair wiring harness using approved methods and materials, clear DTC and retest system to confirm correct operation.
C1709	Right Rear Center Sensor Circuit Failure	• Wiring harness concern	Refer to electrical circuit diagrams. Check if data line is open circuit or short circuit to ground. Repair wiring harness using approved methods and materials, clear DTC and retest system to confirm correct operation.
C1710	Right Rear Center Sensor Circuit Fault	• Sensor fault	Check sensor for correct mounting and cleanliness, renew sensor as required. Clear DTC and retest system to confirm correct operation.
C1711	Left Front Sensor Circuit Short to Vbat	• Wiring harness concern	Refer to electrical circuit diagrams. Check if data line is short circuit to power. Repair wiring harness using approved methods and materials, clear DTC and retest system to confirm correct operation.
C1712	Left Front Sensor Circuit Failure	• Wiring harness concern	Refer to electrical circuit diagrams. Check if data line is open circuit or short circuit to ground. Repair wiring harness using approved methods and materials, clear DTC and retest system to confirm correct operation.
C1713	Left Front Sensor Circuit Fault	• Sensor fault	Check sensor for correct mounting and cleanliness, renew sensor as required. Clear DTC and retest system to confirm correct operation.

DTC	Description	Possible Cause	Action
C1714	Right Front Sensor Circuit Short to Vbat	• Wiring harness concern	Refer to electrical circuit diagrams. Check if data line is short circuit to power. Repair wiring harness using approved methods and materials, clear DTC and retest system to confirm correct operation.
C1715	Right Front Sensor Circuit Failure	• Wiring harness concern	Refer to electrical circuit diagrams. Check if data line is open circuit or short circuit to ground. Repair wiring harness using approved methods and materials, clear DTC and retest system to confirm correct operation.
C1716	Right Front Sensor Circuit Fault	• Sensor fault	Check sensor for correct mounting and cleanliness, renew sensor as required. Clear DTC and retest system to confirm correct operation.
C1717	Left Front Center Sensor Circuit Short to Vbat	• Wiring harness concern	Refer to electrical circuit diagrams. Check if data line is short circuit to power. Repair wiring harness using approved methods and materials, clear DTC and retest system to confirm correct operation.
C1718	Left Front Center Sensor Circuit Failure	• Wiring harness concern	Refer to electrical circuit diagrams. Check if data line is open circuit or short circuit to ground. Repair wiring harness using approved methods and materials, clear DTC and retest system to confirm correct operation.
C1719	Left Front Center Sensor Circuit Fault	• Sensor fault	Check sensor for correct mounting and cleanliness, renew sensor as required. Clear DTC and retest system to confirm correct operation.
C1742	Rear Sounder Circuit Failure	• Wiring harness concern	This fault is detected when speaker is off, refer to electrical circuit diagrams. Check if rear sounder circuit is open circuit or short circuit to ground. Repair wiring harness using approved methods and materials, clear DTC and retest system to confirm correct operation.
C1743	Rear Sounder Circuit Short to Vbatt	• Wiring harness concern	This fault is detected when the speaker is on, refer to electrical circuit diagrams. Check if rear sounder circuit is short circuit to power. Repair wiring harness using approved methods and materials, clear DTC and retest system to confirm correct operation.
C1744	Front Sounder Circuit Failure	• Wiring harness concern	This fault is detected when speaker is off, refer to electrical circuit diagrams. Check if front sounder circuit is open circuit or short circuit to ground. Repair wiring harness using approved methods and materials, clear DTC and retest system to confirm correct operation.
C1745	Front Sounder Circuit Short to Vbatt	• Wiring harness concern	This fault is detected when the speaker is on, refer to electrical circuit diagrams. Check if front sounder circuit is short circuit to power. Repair wiring harness using approved methods and materials, clear DTC and retest system to confirm correct operation.
C1920	Led #1 Circuit Failure	• LED circuit fault	Refer to electrical circuit diagrams. Check if LED circuit is short to ground. Repair wiring harness using approved methods and materials, clear DTC and retest system to confirm correct operation.
B1299	Power Supply Sensor Circuit Short To Ground	• Parking aid module, parking distance sensor (rear) power circuit short to ground	Refer to electrical circuit diagrams, check parking aid module rear sensor power circuit for short to ground. Repair wiring harness using approved methods and materials, clear DTC and retest system to confirm correct operation.
B1342	ECU Is Faulted	• Parking aid module memory failure (RAM)	Suspect faulty module, check and install as required, refer to the new module installation note at the top of the DTC index
B2207	ECU ROM Checksum Error	• Parking aid module - memory failure (ROM)	Suspect faulty module, check and install as required, refer to the new module installation note at the top of the DTC index
B2373	LED #1 Circuit Short to Battery	• Parking aid module, parking aid status (roof console LED) circuit - short to power or open circuit	Refer to electrical diagrams, check parking aid status LED circuit for short to power or open circuit. Repair wiring harness using approved methods and materials, clear DTC and retest system to confirm correct operation.
B2477	Module Configuration Failure	• Parking aid module - configuration failure (EEPROM error during power up)	Reconfigure. If this fails suspect faulty module, check and install as required. Refer to new module installation note at the top of the DTC index

Parking Aid - Front Parking Aid Sensor

Removal and Installation

Removal

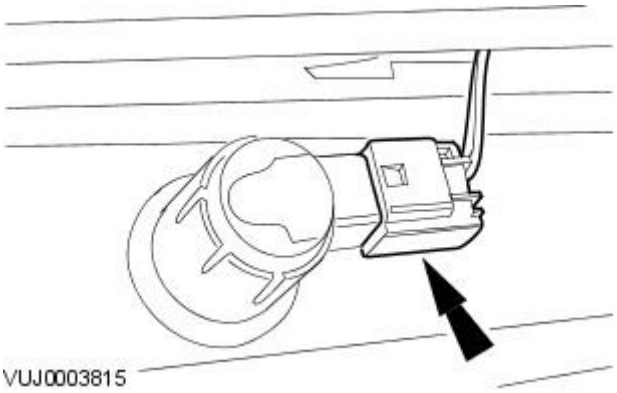

1. Remove the front bumper cover.
   For additional information, refer to: Front Bumper Cover (501-19 Bumpers, Removal and Installation).
2. Disconnect the electrical connector.

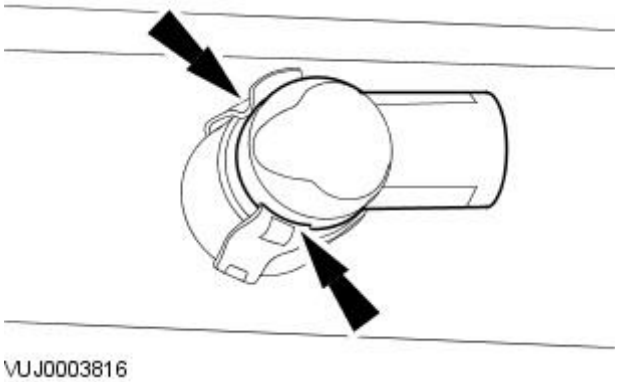

3. CAUTION: Make sure excessive pressure or tools are not used when removing the front parking aid sensor from the parking aid sensor housing.

   Remove the front parking aid sensor.

   - Detach the front parking aid sensor from the parking aid sensor housing.

Installation

1. To install, reverse the removal procedure.

Parking Aid - Front Parking Aid Speaker

Removal and Installation

Removal

All vehicles

1. Disconnect the battery ground cable.
For additional information, refer to: Battery Disconnect and Connect (414-01 Battery, Mounting and Cables, General Procedures).

Vehicles with automatic transmission

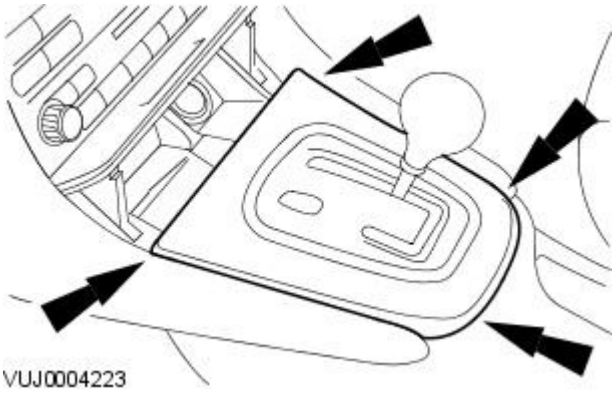

2. NOTE: To aid removal of the navigation module and audio unit place the transmission selector lever in the 'D' position.

Remove the transmission selector lever surround.

Vehicles with manual transmission

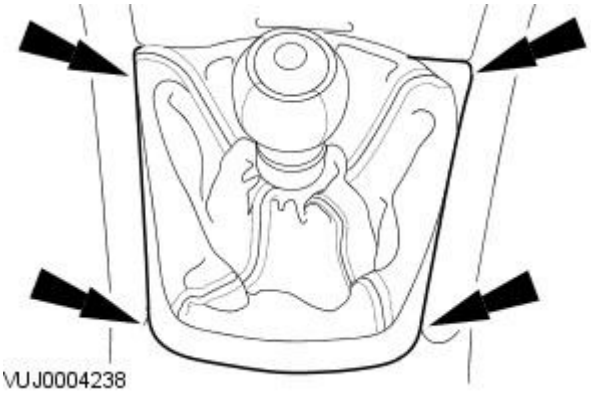

3. Detach the gearshift lever surround.

All vehicles

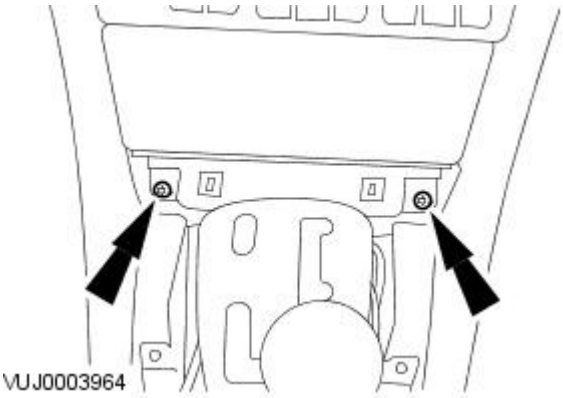

4. Remove the ashtray retaining screws.

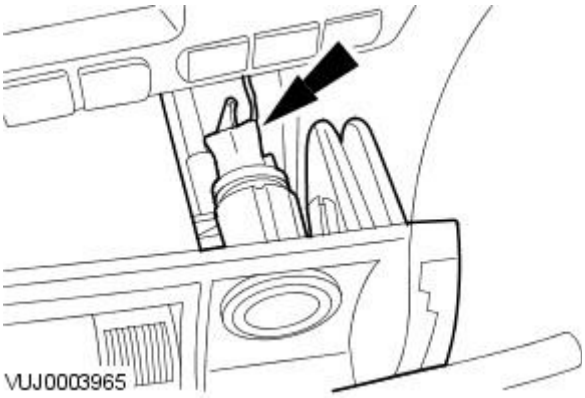

5. Remove the ashtray

- Disconnect the electrical connectors.
- Remove the ashtray.

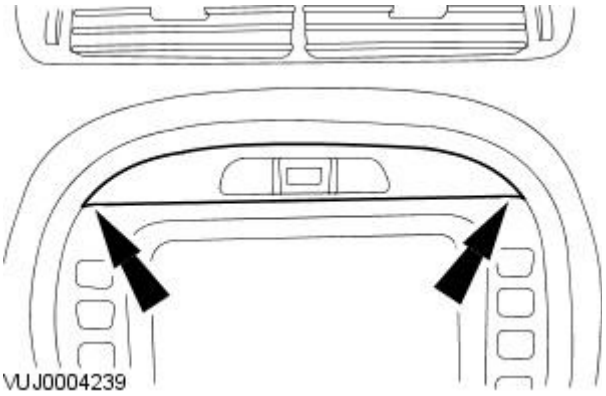

6. Remove the switch pack trim cover.

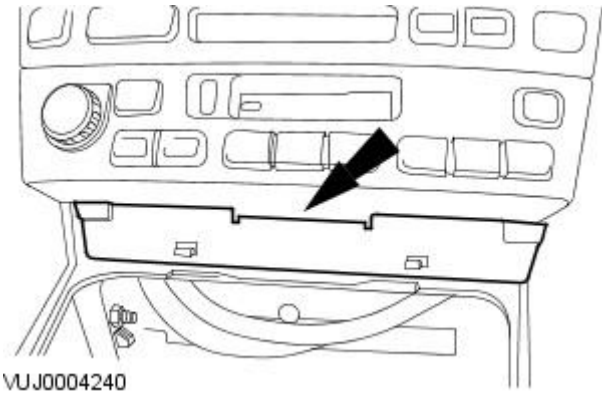

7. Remove the retaining screw cover plate.

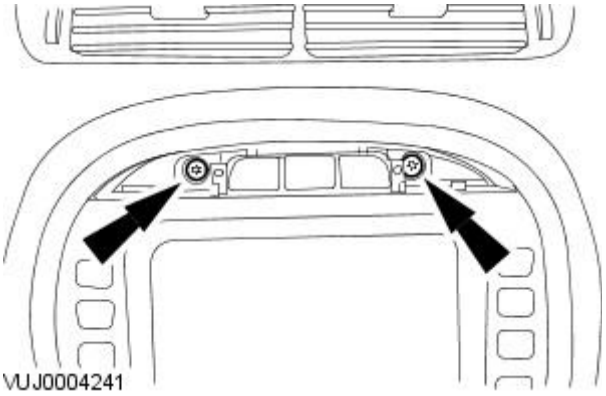

8. Remove the display mounting bracket upper retaining screws.

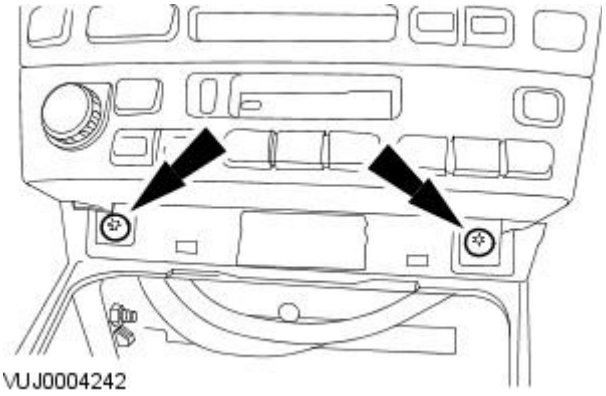

9. Remove the display mounting bracket lower retaining screws.

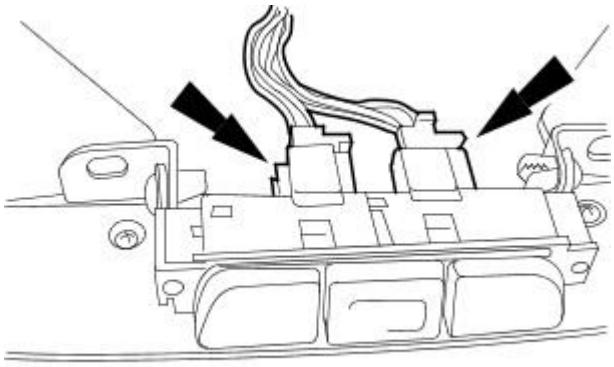

10. Disconnect the electrical connectors.

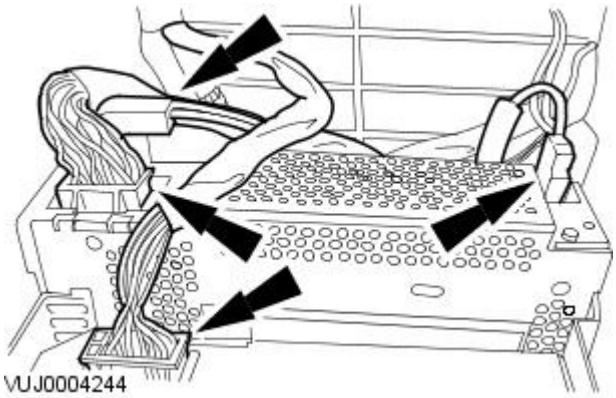

11. Remove the display module and audio unit.

1. Disconnect the electrical connectors and the fibre optic connector.
2. Remove the display module and audio unit.

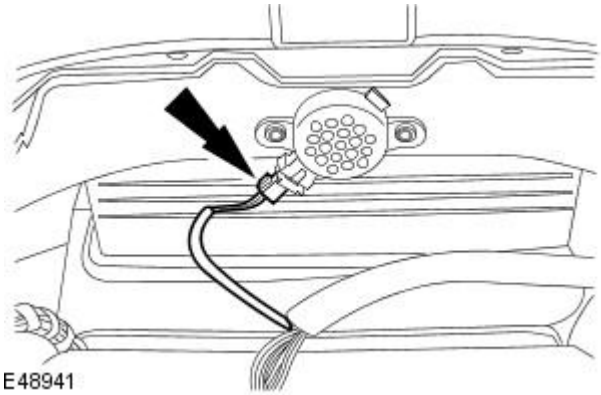

12. Disconnect the front parking aid speaker electrical connector.

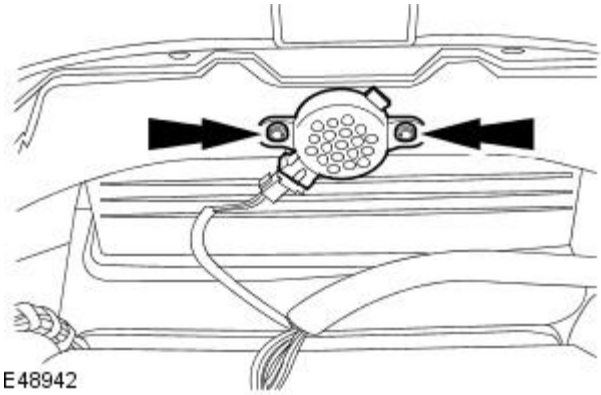

13. Remove the front parking aid speaker.

Installation

1. To install, reverse the removal procedure.

2. Connect the battery ground cable.
For additional information, refer to: Battery Connect (414-01 Battery, Mounting and Cables, General Procedures).

Parking Aid - Parking Aid Module4-Door

Removal and Installation

Removal

1. Disconnect the battery ground cable. For additional information, refer to Section 414-01 Battery, Mounting and Cables.
2. Remove the spare wheel.
3. Disconnect the electrical connector.

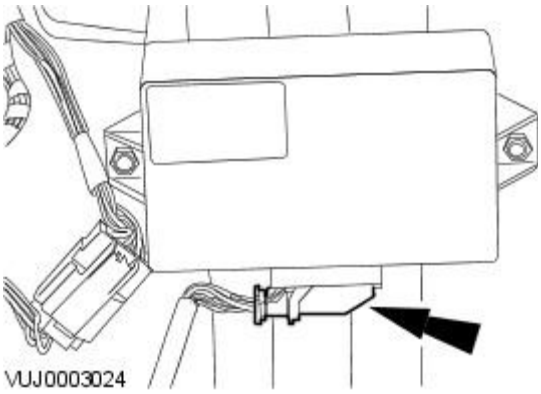

4. Remove the parking aid control module.

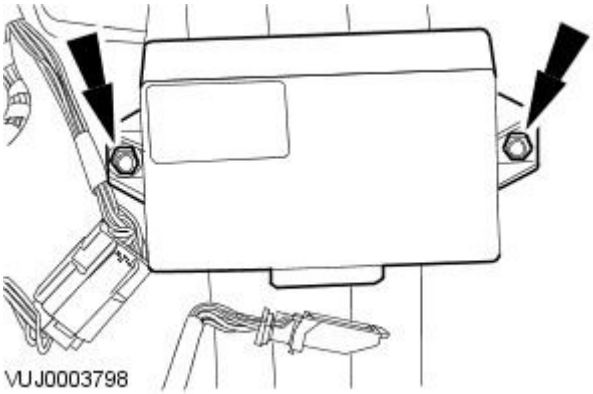

Installation

1. To install, reverse the removal procedure.

Parking Aid - Parking Aid ModuleWagon

Removal and Installation

Removal

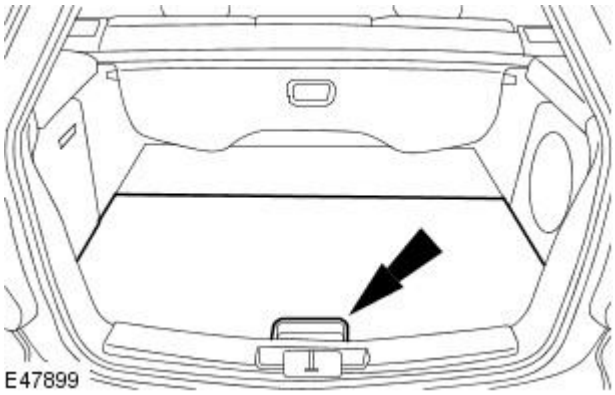

1. Raise the loadspace floor covering.

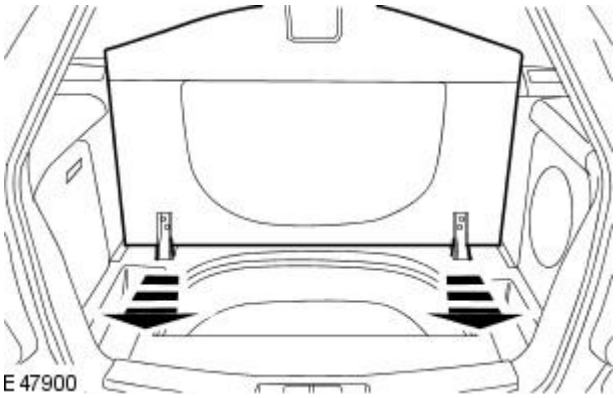

2. Remove the loadspace floor covering.

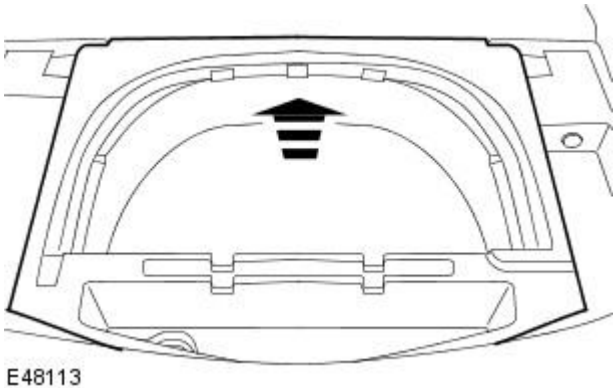

3. Remove the centre loadspace stowage compartment.

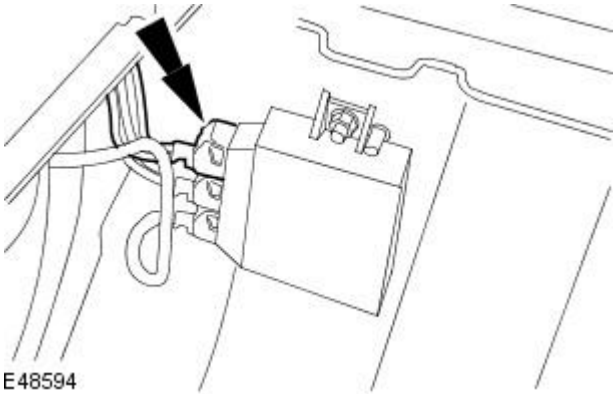

4. Disconnect the electrical connector.

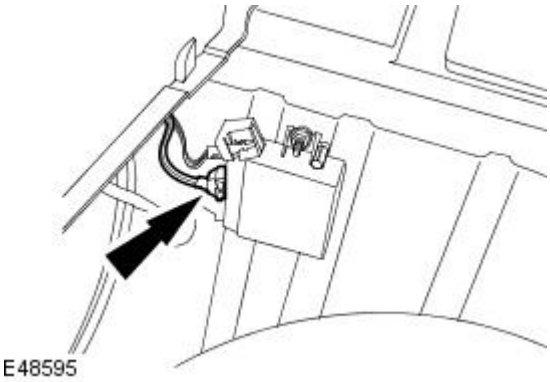

5. Disconnect the electrical connector.

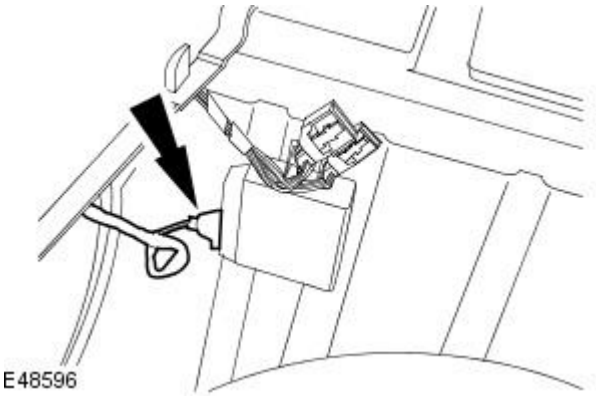

6. Disconnect the electrical connector.

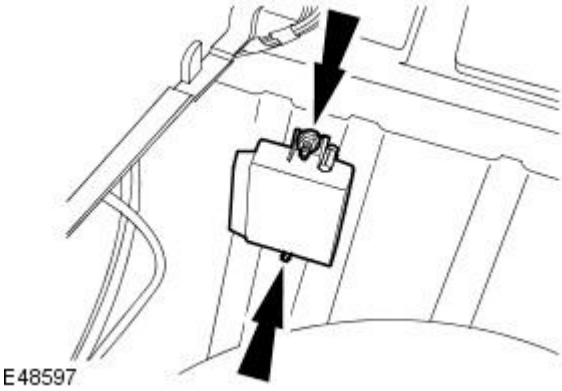

7. Remove the parking aid module.

Installation

1. To install, reverse the removal procedure.

Parking Aid - Rear Parking Aid Sensor

Removal and Installation

Removal

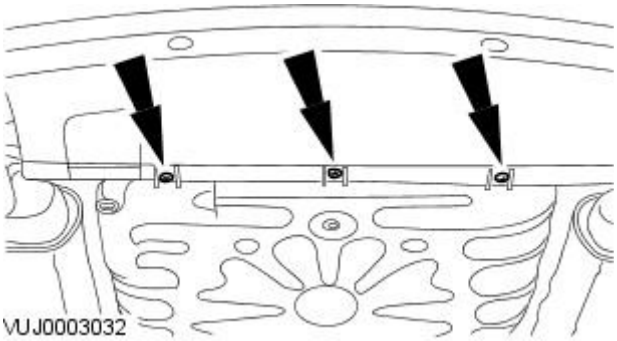

1. Detach the bumper lower black out panel.

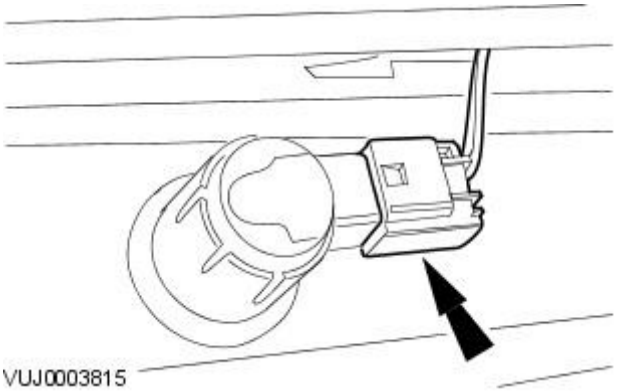

2. Disconnect the electrical connector.

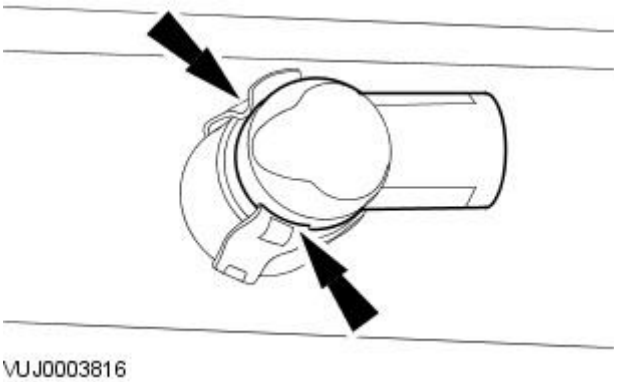

3. CAUTION: Make sure excessive pressure or tools are not used when removing the sensor from the sensor housing.

Remove the sensor.

- Unclip the sensor from the sensor housing.

Installation

1. To install, reverse the removal procedure.

Parking Aid - Rear Parking Aid Speaker4-Door

Removal and Installation

Removal

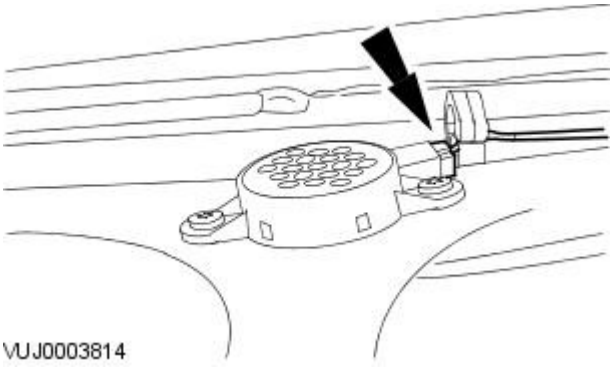

1. Remove the rear parcel shelf. For additional information, refer to Section 501-05 Interior Trim and Ornamentation.
2. Disconnect the electrical connector.

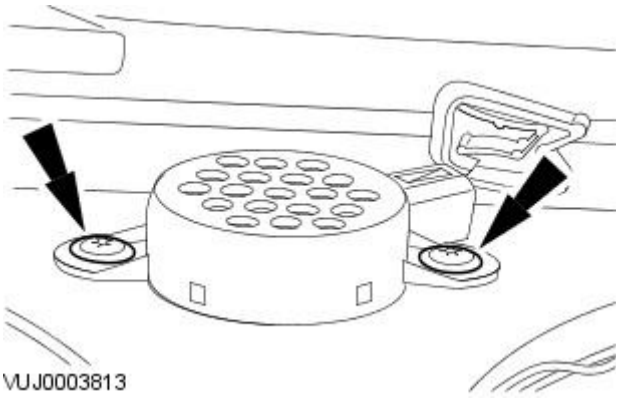

3. Remove the speaker.
   - Remove and discard the rivets.

Installation

1. NOTE: Install new rivets.

   To install, reverse the removal procedure.

Parking Aid - Rear Parking Aid SpeakerWagon, VIN Range: D86655->E43419

Removal and Installation

Removal

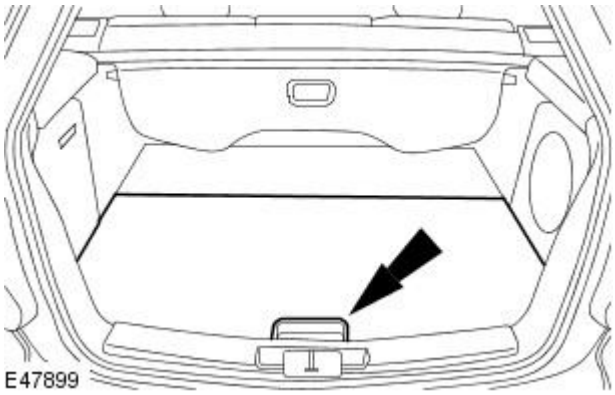

1. Raise the loadspace floor covering.

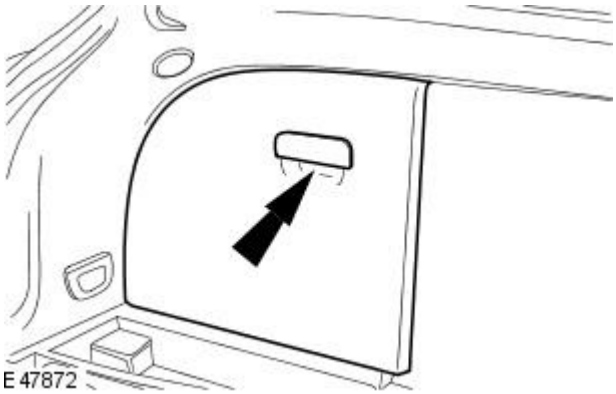

2. Remove the loadspace stowage compartment trim panel.

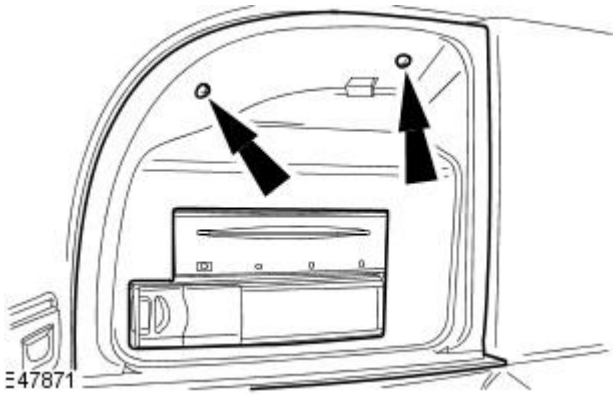

3. Remove the loadspace stowage compartment.

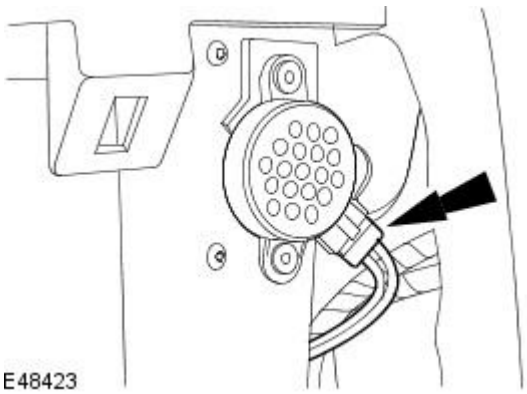

4. Disconnect the rear parking aid speaker electrical connector.

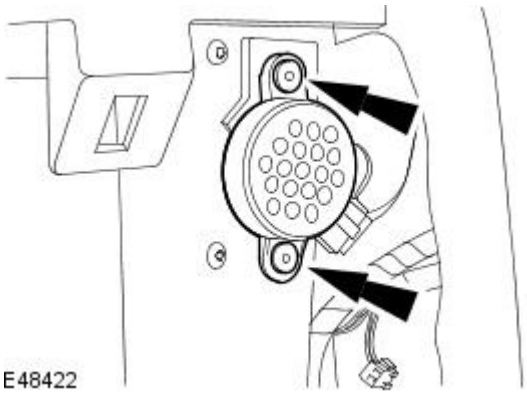

5. Remove the rear parking aid speaker.

Installation

1. To install, reverse the removal procedure.

Parking Aid - Rear Parking Aid SpeakerWagon, VIN Range: E43420->V99999

Removal and Installation

Removal

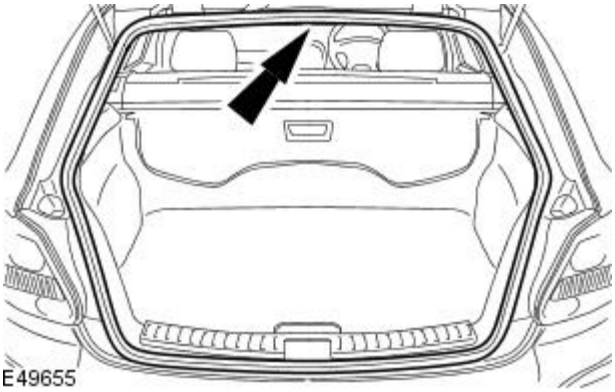

1. NOTE: The liftgate weatherstrip must be replaced once removed.

Remove and discard the liftgate opening weatherstrip.

2. Remove both C-pillar trim panels.
For additional information, refer to: C-Pillar Trim Panel - Wagon (501-05 Interior Trim and Ornamentation, Removal and Installation).

3. Remove both D-pillar trim panels.
For additional information, refer to: D-Pillar Trim Panel (501-05 Interior Trim and Ornamentation, Removal and Installation).

4. Remove the rear grab handles.

- Reposition the screw covers.
- Remove the screws.

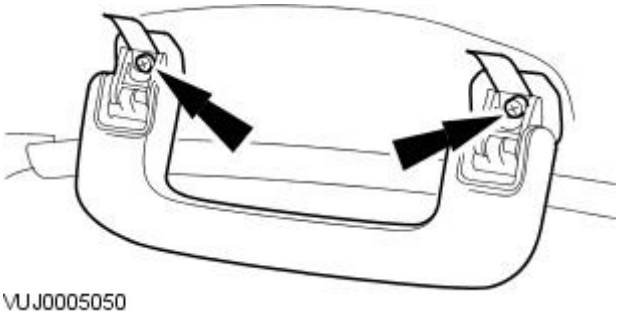

5. Remove both luggage net retaining clips.

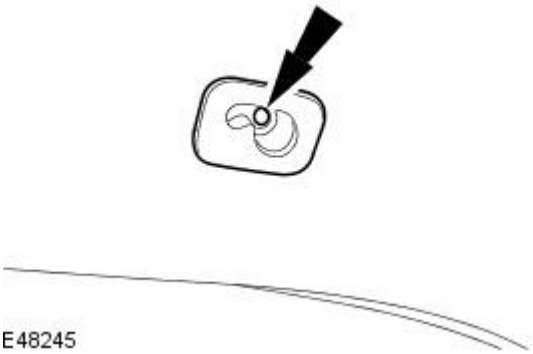

6. Detach the headliner.

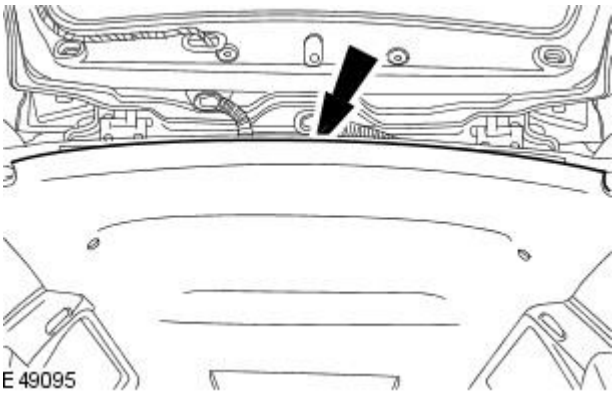

7. CAUTION: Make sure the headliner is not creased or folded. Failure to follow this instruction may result in damage to the vehicle.

Lower the rear of the headliner to gain access to the rear parking aid speaker.

8. Disconnect rear parking aid speaker electrical connector.

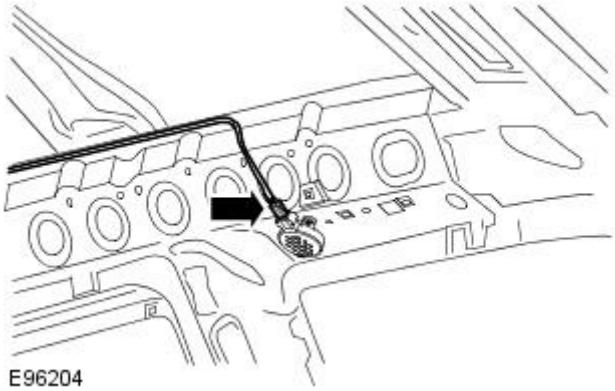
E96204

9. Remove the rear parking aid speaker.

- Remove the 2 screws.

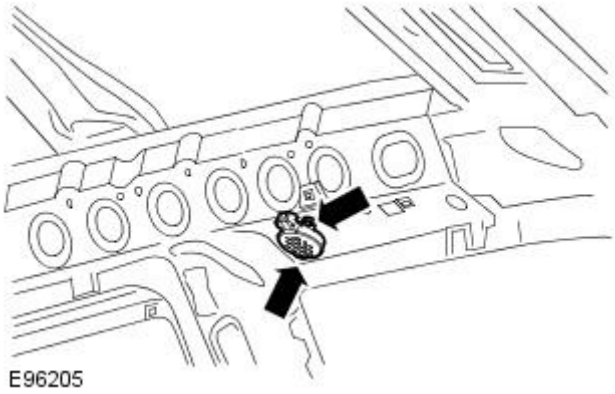
E96205

Installation

1. To install, reverse the removal procedure.

- Install a new liftgate opening weatherstrip.

Battery and Charging System - General Information - Charging System

Description and Operation

Vehicles with 2.0L, 2.5L or 3.0L engines

The charging system consists of a 120 amp output generator and regulator assembly which generates current to supply the vehicle electrical system with electricity when the engine is running and maintain the battery in a charged condition.

The generator is belt driven by the accessory drive belt.
For additional information, refer to: Accessory Drive (303-05 Accessory Drive, Description and Operation).
When the engine is started, the generator begins to generate alternating current (AC) which is converted to direct current (DC) internally. The DC current and voltage is controlled by the voltage regulator, (located inside the generator), and then supplied to the battery through the main battery positive cable.

The generator is solidly mounted to the engine timing cover and is driven at 2.8 times the engine speed.

Vehicles fitted with manual transmission have a one way clutch fitted to the drive pulley, which prevents torsional vibrations from the engine being transmitted to the generator.

The engine control module (ECM) can switch the voltage regulator between two voltages to optimize the charging of the battery.

The low voltage regulator setting is 13.6 volts and the high voltage regulator setting is 15.3 volts, measured with the generator at 25°C (77°F) and charging at a rate of 5 amps. These values decrease with a rise in temperature or current flow.

The ECM determines the voltage setting of the voltage regulator. The high voltage setting is always selected by the ECM once the vehicle has started. The ECM determines the period of time that the high voltage setting is selected for.

There are three different time periods selected by the ECM which is dependent upon the vehicle conditions when the vehicle is started:

- The longest time period is selected if the ECM determines that the vehicle has been 'soaking' for sufficient time to allow the engine coolant temperature (ECT) and the intake air temperature (IAT) to fall within 3°C (37°F) of each other.
- The intermediate time period is selected when the ECT and the IAT is below 5°C (41°F).
- The shortest time period is the default time and is used to provide a short period of boost charge.

At the end of these time periods the voltage is always set to the low voltage setting to prevent the battery from being overcharged.

The time periods are variable depending upon the temperature and the battery voltage. The target voltage of the battery varies between 14 volts and 15 volts depending upon the ambient temperature and the vehicle operating conditions. Once this target voltage has been achieved, providing the vehicle has been operating for at least the shortest time period, the ECM will reduce the voltage regulator to the minimum setting of 13.6 volts.

There are three wires connected to the generator from the ECM by connector EN16:

- EN49-1; RG wire, is the voltage regulator request setting from the ECM to the generator.
- EN49-3; OG wire, is a pulse width modulated signal (PWM) from the generator to the ECM which enables the ECM to monitor the generator load on the engine.
- EN49-4; U wire, is the charge warning lamp signal wire from the generator to the ECM.

If the voltage request signal wire (EN 49-1) is open circuit or short to battery positive, the generator will charge the battery at a setting of 15.3 volts. If the wire is short circuit to ground, the generator will charge the battery at a setting of 13.6 volts.

A fault in the wiring or the connections from the generator to the ECM, will cause a fault code to be generated and stored in the ECM and the charge warning indicator lamp to be displayed in the instrument cluster (IC) after a short time.

The charge warning indicator lamp is operated by the IC after receiving a signal from the ECM through the control area network (CAN).

With the ignition switch in the RUN position the charge warning indicator lamp will be displayed in the IC when the generator is not generating power.

If a fault is detected with the generator a fault code will be generated and stored by the ECM. The charge warning indicator lamp will also be displayed in the IC.

Units should be repaired as an assembly and not dismantled for repair.
For additional information, refer to: Generator - 2.0L NA V6 - AJV6/2.5L NA V6 - AJV6/3.0L NA V6 - AJ27 (414-02 Generator and Regulator, Removal and Installation).

Vehicles with 2.0L and 2.2L diesel engine

The diesel charging system differs from that used in petrol-engined variants in that it incorporates a **'smartcharge'** function.

This function is capable of supplying infinitely variable voltages to the battery, depending on the temperature and on the current requirements of the battery.

The system continuously monitors the battery voltage and temperature (via the ambient air temperature sensor), and uses a map of both to deliver the optimum charge to the battery.

Another feature of this system is that it uses a 'wake-up' and 'sleep' strategy, initiated by the ignition switch position and ECM, rather than being constantly active, to avoid current drain.

Published: 14-Jul-2011

Battery and Charging System - General Information - Battery Care

Description and Operation

12V LEAD ACID BATTERY CARE MANUAL FOR DEALER / RETAILER USE

1. INTRODUCTION

2. GENERAL RULES FOR BATTERY CARE

3. EQUIPMENT (MINIMUM STANDARD)

4. HEALTH AND SAFETY PRECAUTIONS

5. DETERMINING BATTERY CONDITION

6. BATTERY CHARGING AND MAINTENANCE

7. CHARGING SYSTEM TEST AND DIAGNOSIS

8. VEHICLE QUIESCENT CURRENT TESTING

APPENDIX A: BATTERY TEST PROCESS

APPENDIX B: BATTERY REPORT FORM - IN SERVICE BATTERIES ONLY

1. INTRODUCTION

This publication sets out, for the benefit of dealers / retailers worldwide, requirements for the care and maintenance of batteries, from the vehicles hand-over to the dealer / retailer to the handover to the customer or in the case of a spare part battery from is delivery to the dealer / retailer to its fitment to a customer vehicle.

It applies to all types of 12 volt Lead Acid Batteries used, whether they are conventional flooded technology or Absorbed Glass Mat (AGM) technology and also applies to both Primary and Secondary or Auxiliary Batteries.

The clearly laid out and illustrated sections guide dealers / retailers through each stage of the vehicles or spare parts receipt, storage, pre-delivery and customer hand-over. This publication can be used as a guide to the handling and care of batteries in service. It is vital to appreciate that unless each process is rigorously applied on all vehicles, the customer will receive a vehicle with a battery or a spare part battery which will not provide a satisfactory service life.

It is very important that all tests quoted throughout this publication are adhered to. If they are applied incorrectly batteries could be scrapped unnecessarily. Refer to the battery testing section for detailed information.

It is equally important therefore to note the following key points:

- Most new vehicles leave the factory with either a transit relay installed and/or have a transit mode programmed into the vehicle control modules. The transit relay must be removed and the transit mode disabled (where applicable) using an approved diagnostic system, **NOT MORE THAN 24 HOURS** before the customer takes delivery.
- 12 Volt Lead Acid Batteries rely on internal chemical processes to create a voltage and deliver current. These processes and the internal chemical structure of the battery can be damaged if the battery is allowed to discharge over a number of weeks / months, or is left in a discharged state for a lengthy time period. For this reason the battery must be tested / re-charged if necessary every month, and **MUST BE** re-charged after every three month period of storage. Refer to the vehicle storage manual and update the vehicle history sheet.
- Under no circumstances should the battery be disconnected with the engine running because under these conditions the alternator can give a very high output voltage. This high transient voltage will damage the electronic components in the vehicle. Loose or incomplete battery connections may also cause high transient voltage.
- On vehicles with conventional ignition keys, these must not be left in the ignition lock barrel when the transit relay has been removed, otherwise quiescent current will increase and the battery will discharge more rapidly.
- Two types of Lead acid batteries are used; standard Flooded type and AGM (Absorbed Glass Mat) or VRLA (Valve regulated Lead Acid) types. AGM batteries offer improved resistance to cycling as seen in stop start applications. AGM Batteries are fully sealed and cannot have the electrolyte level topped up.

Dealers and retailers involved in the storage, handling of vehicles and spare parts batteries have a responsibility to ensure that only vehicles and spare parts having a fully satisfactory battery may be processed further through the distribution selling chain.

• NOTE: It is very important that test processes quoted throughout this publication are adhered to.

If they are not adhered to correctly batteries could be scrapped unnecessarily or a battery with an issue remains in use. Refer to the battery testing section for detailed information.

2. GENERAL RULES FOR BATTERY CARE

Frequency of Battery Condition Checks.

Any battery in storage whether it is in a vehicle or in spare parts inventory must have its charge status checked every 30 days as described in Appendix A, and must be recharged every 90 days as described in the "Battery Charging and Maintenance" section of this manual.

Dealer Demonstration Vehicles

Due to the high depth of discharge a dealer demonstration vehicle battery may experience, batteries that are fitted to vehicles used as dealer demonstration vehicles must be connected to a power supply / charger capable of delivering 50 Amps or more whilst the vehicle is being demonstrated and the engine is not running. This will prevent the battery from being damaged from "energy throughput " wear out during a demonstration.

Software Reflash, SDD work or Ignition On related Workshop Activities.

Due to the high electrical current demand and high depth of Discharge that can occur during vehicle software re-flash activities, SDD work or ignition on related work in the workshop, vehicles that are undergoing such activities MUST have the electrical system on the vehicle

supported with a power supply / charger / vehicle maintainer capable of delivering 50 Amps or more.

Jump Starting New vehicles Before They Have Been Delivered to the Customer.

- It is the dealer / retailers responsibility to ensure the battery is not allowed to go flat by following the instructions and processes defined in this manual.
- However if circumstances dictate that a new vehicle must be jump started due to a flat battery whilst the vehicle is in the dealer / retailers care, the battery on this vehicle must be replaced with a new one prior to delivery to the customer at the dealer / retailers liability.
- The vehicle should also undergo investigation as to why the battery went flat.
- Do not connect the jump starting cable to the negative (-) terminal of the battery. Always connect to the recommended earthing point. As defined in the owners handbook or service documentation for that vehicle.

Jump Starting or Boost Charging Vehicles in Service

Do not connect the jump starting cable to the negative (-) terminal of the battery. Always connect to the recommended earthing point. As defined in the owners handbook or service documentation for that vehicle.

Charging AGM Batteries

AGM batteries must not be charged with voltages above 14.8 Volts. Doing so will damage them.

Testing AGM Batteries

Midtronics 393, 394, 493 and 494 testers are not capable of testing AGM batteries. Doing so can give an incorrect result.

When it is necessary to test an AGM battery use the Midtronics EXP1080 tester or the GR1 Diagnostics Charger.

3. EQUIPMENT (MINIMUM STANDARD) (pictures are for illustration only)

Traction Battery Charger (or similar stand-alone charger)

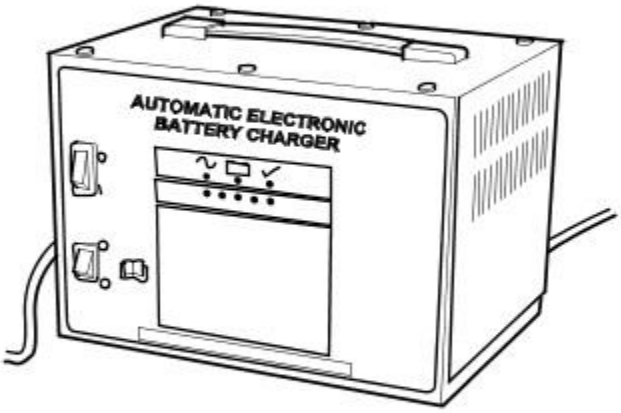

E138126

Midtronics EXP1080 Hand-Held Tester

Digital Multi-Meter or Digital Volt-Ohm Meter (DVOM)

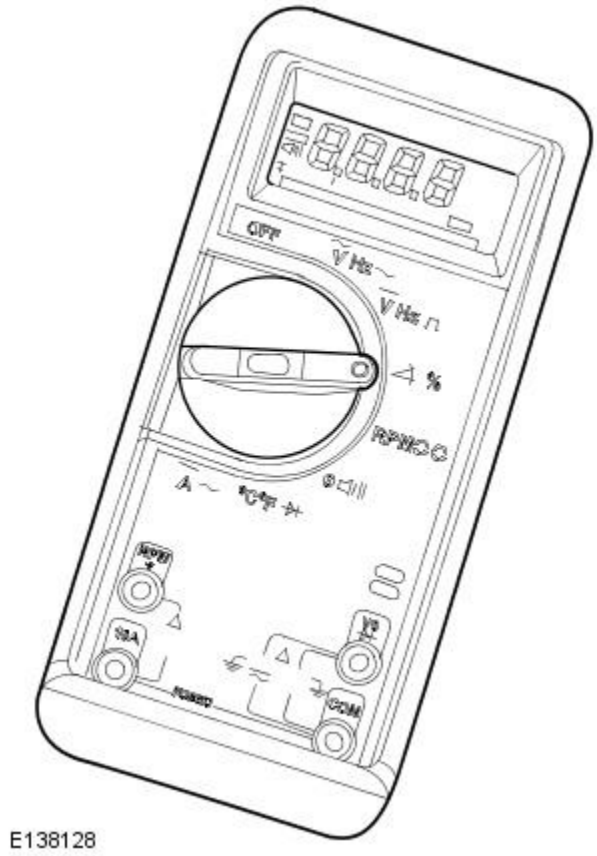

Midtronics GR-1 Diagnostic Charger

E138129

4. HEALTH AND SAFETY PRECAUTIONS

• WARNINGS:

BATTERY CELLS CONTAIN SULPHURIC ACID AND EXPLOSIVE MIXTURES OF HYDROGEN AND OXYGEN GASES. IT IS THEREFORE ESSENTIAL THAT THE FOLLOWING SAFETY PRECAUTIONS ARE OBSERVED.

Batteries emit highly explosive hydrogen at all times, particularly during charging. To prevent any potential form of ignition occurring when working in the vicinity of a battery:

- Do not smoke when working near batteries.
- Avoid sparks, short circuits or other sources of ignition in the battery vicinity.
- Switch off current before making or breaking electrical connections.
- Ensure battery charging area is well ventilated.
- Ensure the charger is switched off when: a) connecting to a battery; b) disconnecting from the battery.
- Always disconnect the ground cable from the battery terminal first and reconnect it last.

Batteries contain poisonous and highly corrosive acid. To prevent personal injury, or damage to clothing or the vehicle, the following working practices should be followed when topping up, checking electrolyte specific gravity, removal, refitting or carrying batteries:

- Always wear suitable protective clothing (an apron or similar), safety glasses, a face mask and suitable gloves.
- If acid is spilled or splashed onto clothing or the body, it must be neutralized immediately and then rinsed with clean water. A solution of baking soda or household ammonia and water may be used as a neutralizer.
- In the event of contact with the skin, drench the affected area with water. In the case of contact with the eyes, bathe the affected area with cool clean water for approximately 15 minutes and seek urgent medical attention.
- If battery acid is spilled or splashed on any surface of a vehicle, it should be neutralized and rinsed with clean water.
- Heat is generated when acid is mixed with water. If it becomes necessary to prepare electrolyte of a desired specific gravity, SLOWLY pour the concentrated acid into water (not water into acid), adding small amounts of acid while stirring. Allow the electrolyte to cool if noticeable heat develops. With the exception of lead or lead-lined containers, always use non-metallic receptacles or funnels. Do not store acid in excessively warm locations or in direct sunlight.

Due to their hazardous contents, the disposal of batteries is strictly controlled. When a battery is scrapped, ensure it is disposed of safely, complying with local environmental regulations. If in doubt, contact your local authority for advice on disposal facilities.

5. DETERMINING BATTERY CONDITION

The tools used for determining the condition of the battery will depend upon whether it is installed in a vehicle or in spare parts inventory. Concerning an installed battery, procedures will vary if the vehicle is new, or already in service with a customer.

• NOTE: The term `New Vehicle' refers to a vehicle at any part of the delivery process from leaving the factory to arriving at a port of entry, dealership, retailer, including any storage facilities en route or a vehicle being stored prior to sale at dealership / retailer.

• NOTE: Midtronics 393, 394. 493 and 494 testers must not be used to test AGM batteries as these testers are not capable of correctly testing AGM batteries and can give an incorrect result. For AGM battery testing use the EXP1080 tester or the GR1 Diagnostics charger.

NEW VEHICLES

A Midtronics tester should be used to assess the condition of the battery for new vehicles. The test results should be recorded on the Storage History Sheet (see Vehicle Storage manual).

Scenario 1 - Dealership / Retailer (Responsibility: Dealer / Retailer)

1. Within 24 hours of arrival at the dealer / retailer proceed as follows:

- Perform a Midtronics battery test (See Appendix A.)
- Carry out the recommended actions accordingly.

2. If the Midtronics result is "Good Battery" the vehicle may be stored.

- For all new vehicles in storage the transit relay MUST be fitted, or the Transit Mode enabled where used. For vehicles without a transit relay or a Transit Mode, the battery negative cable MUST BE DISCONNECTED from the battery.

3. The battery must be tested and/or re-charged every month and MUST be re-charged after every three month period.

4. Record your test results on the Storage History Sheet (see Vehicle Storage Manual) to indicate when a re-charge will be necessary.

Scenario 2 - Delivery to the Customer (Responsibility: Dealer / Retailer)

• NOTE: It is essential that the following actions are conducted in the 24 hours prior to the agreed hand over time:

1. Perform a Midtronics Battery test (See Appendix A).

2. Carry out the recommended actions accordingly.

3. The vehicle should only be released to the customer if Midtronics has tested the battery as "Good Battery"

Spare Part Batteries

Lead acid batteries will, as a result of natural chemical processes, slowly self discharge themselves over a period of time (even when open circuit and no electrical load applied).

In the case of spare parts batteries, a Midtronics tester should be used to assess the condition of new spare parts batteries.

The batteries must be stored such that they cannot get wet and are not in direct sunlight.

Any batteries which are dropped must be scrapped. This applies even if no external damage is apparent.

Scenario 1 - Spare Part Batteries Within Dealer Stock But Not Yet Fitted To A Vehicle (Responsibility: Dealer / Retailer)

1. For a battery in the Dealer parts or in ready to use stock but not yet fitted to a vehicle the following rules must be followed:

- Check the battery condition on receipt by performing a Midtronics battery test (See Appendix A).
- Batteries should only be returned to storage if the Midtronics tester indicates "Good Battery".
- The battery condition should be rechecked every 30 days by performing a Midtronics battery test (See Appendix A).
- If required batteries should be recharged as described in the "Battery Charging and Maintenance" section of this manual.

2. 2 All batteries must be controlled via a FIFO (First In First Out) process to ensure aged batteries are not held and the batteries are not allowed to age unnecessarily.

VEHICLES IN SERVICE

The Midtronics hand-held tester or the Midtronics Diagnostic Charger are the preferred tools to assess battery condition for vehicles in service. The test results should be recorded on the In-Service Battery Report Form (See Appendix B).

Midtronics Testing - In-Service Testing Only

• NOTE: The battery surface charge must be removed before this test in accordance with the procedure in Appendix A. Ensure that the battery terminal connectors are clean. When connecting the Midtronics testing equipment, connect the RED clip to the positive (+) battery terminal first, and then connect the BLACK clip to the negative (-) battery terminal. Rock the clips backward and forward to ensure a good connection to the battery.

1. Perform a Midtronics battery test (See Appendix A).

2. Carry out the recommended actions accordingly.

6. BATTERY CHARGING AND MAINTENANCE

BATTERY CHARGING

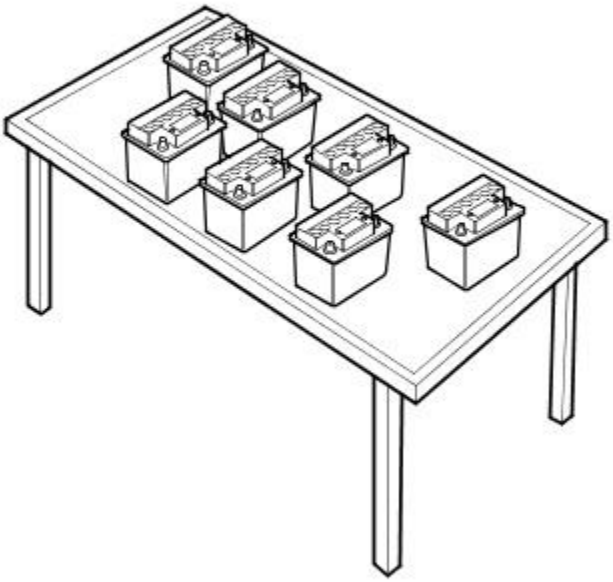

E138130

It is essential that a suitably ventilated defined area exists in each dealership / retailer for battery charging. Likewise, an area should be allotted for scrap batteries, and clearly indicated as such. It is recommended that dealers / retailers always have fully charged batteries ready for use. However the battery MUST BE tested and charged if necessary every month, and charged after three months irrespective of any test.

• CAUTIONS:

⚠ Batteries must be re-charged after a maximum of 3 months storage (see Storage History sheet in the New Vehicle Storage Manual).

⚠ It is very important that when charging batteries using the traction charger or other stand-alone chargers that the charger is set for the correct type of battery before charging commences. If the wrong switch is selected the result would be a battery that is not charged fully and / or overheating can occur. Follow the manufacturers operating instructions.

⚠ Do not charge AGM batteries with voltages over 14.8 volts as this will damage the battery.

To bring a serviceable but discharged battery back to a fully charged condition proceed as follows:

- Check and if necessary top-up the battery electrolyte level.
- Charge the battery using the Midtronics Diagnostic Charger (USA) or Traction Charger (all other markets) following the manufacturers operating instructions.

• NOTE: When using the Midtronics Diagnostic Charger, automatic mode must always be used. After charging and analysis, the charger may display 'Top-Off Charging', press STOP to end. Do not stop charging until the current falls to 5A or less, otherwise the battery will not be fully charged.

POST-CHARGE TEST METHODS

New Batteries, Batteries in Storage and In-Service Batteries

The purpose of this test is to ensure that the charging process has fully charged the battery.

• NOTE: IT IS RECOMMENDED THAT THIS TEST IS CONDUCTED AT LEAST 24 HOURS AFTER THE CHARGE CYCLE IS COMPLETED.

CAUTION: DO NOT connect the tester to any other circuit or chassis point.

1. Attach the Midtronics Tester to the battery.

2. Follow the instructions on the tester to test the battery. Ensure the correct battery type and size is selected.

3. Perform the action based on the tester results (see the tester results chart in the Vehicles in Service sub -section of Determining Battery Condition Section).

4. Enter the readings and test code obtained on the In Service Battery Report Form.

• NOTE: Midtronics 393, 394. 493 and 494 testers must not be used to test AGM batteries as these testers are not capable of correctly testing AGM batteries and can give an incorrect result. For AGM battery testing use the EXP1080 tester or the GR1 Diagnostics charger.

BATTERY REPLACEMENT

If it is determined that a battery requires replacement, always refer to the appropriate section of the workshop manual for instructions on removing and installing the battery from the vehicle.

On in service vehicles fitted with a Battery Monitoring System (BMS), the BMS module must be reset following the installation of a new battery. The BMS module reset procedure must be performed using an approved diagnostic system.

CHECK / TOP-UP BATTERY ELECTROLYTE – Only Applicable to certain Flooded Types of Battery.

• WARNINGS:

AGM TECHNOLOGY BATTERIES ARE FULLY SEALED FOR LIFE AND NO ATTEMPT SHOULD BE MADE TO CHECK OR TOP UP THE ELECTROLYTE LEVEL.

BEFORE CHECKING AND TOPPING-UP THE BATTERY ELECTROLYTE, REFER TO THE HEALTH AND SAFETY PRECAUTIONS SECTION.

Check to ensure the battery is of a type suitable for topping up. These types of batteries will have cell plugs visible on the top face of the battery or a removable access panel to allow access to the cells.

On batteries with a clear or opaque case and level marks, check the electrolyte level by visual inspection of the maximum level indicator mark on the battery casing indicating adequate level above the battery separators.

On batteries with black cases, remove the cell plugs or access panel and ensure the electrolyte level is level with the indicator in the cell hole. A flashlight may be required to see the electrolyte level on this type of battery.

CAUTION: **DO NOT** overfill.

If the electrolyte level is low, top-up using distilled water.

Maintenance free and Valve Regulated (AGM) batteries are sealed and therefore cannot be topped up.

CHARGING SYSTEM TEST AND DIAGNOSIS

For all vehicles, refer to the Charging System - Diagnosis and Testing in section 414-00 of the Workshop Manual.

VEHICLE QUIESCENT CURRENT TESTING

• NOTE: On vehicles fitted with a Battery Monitoring System (BMS), the diagnostic routine for quiescent drain testing in the approved diagnostic system should be utilized.

• NOTE: If a customer complains of a vehicle battery that discharges continuously or when left for a prolonged period of time, it is recommended that a quiescent drain test is performed as described below.

• NOTE: The battery drain should be measured using an approved diagnostic system or a Digital Multi-Meter (DVOM).

The vehicle should be in the locked/armed state (for example vehicle alarm fully armed), all doors, engine and luggage compartment lids are open and latched (so as to appear closed from an electrical point of view). The test should take place after the vehicle has entered shutdown mode. The time taken for this to occur after the ignition is switched off varies according to model - Refer to Quiescent Drain in section 414-00 of the Workshop Manual.

• NOTE: When the vehicle is armed, the effect of the security system Light Emitting Diode (LED) flashing is to cause a pulsation in the measured current drain. In this case, either the average current should be taken (using a Digital Multi- Meter (DVOM) with an averaging system) or the current reading taken, ignoring the brief high current peaks.

EQUIPMENT

Approved diagnostic system with current probe or Digital Multi-Meter (DVOM) with current probe.

METHOD OF MEASUREMENT

Using an Approved Diagnostic System

1. Switch off all electrical loads and ensure that the ignition is off.

2. Connect the current probe to the approved diagnostic system.

3. Calibrate the probe.

4. Install a clamp around the battery lead/junction box lead.

5. Go to the Quiescent Current Testing section.

Using a Digital Multi-Meter (DVOM)

• NOTE: Do not use an in-line DVOM to measure the quiescent drain on vehicles fitted with an electronic throttle. The current exceeds the maximum amount the fuse in the DVOM is capable of handling.

1. Switch off all electrical loads and ensure that the ignition is off.

2. Connect the current probe to the DVOM.

3. Calibrate the probe.

4. Install a clamp around the battery lead/junction box lead.

5. Go to the following Quiescent Current Testing section.

QUIESCENT CURRENT TESTING

1. Switch ignition to ‘on’ or select ignition mode in keyless vehicles and switch to ‘off’ (do not crank).

2. Remove key from ignition switch (where applicable).

3. Open and latch all doors, hood and luggage compartment lid.

4. Lock the vehicle using the remote function on the remote handset. (Single lock only to avoid volumetric alarm arming).

5. Remove any other potential electrical drains such as accessories plugged into accessory sockets.

6. Record the amperage readings after the shutdown period. The model specific Amperage readings for quiescent drain are referenced in Quiescent Drain in section 414-00 of the Workshop Manual

7. Record the final reading on the battery report form Appendix B.

• NOTE: The preferred method of testing following an excessive current consumption figure is to use a current probe around individual junction box leads to the various suspected circuits to identify a potential cause. This is in preference to the old method of removing fuses for the following reasons:

- Many modules take a considerable time to power down. Each time a fuse is removed and re-fitted, the quiescent drain current may take an extended period of time to return to normal (typically up to 45 minutes).
- The drain may be caused by a module remaining active and preventing the quiescent drain from reducing to normal levels.
- The drain may be caused by a relay winding that is activated. Pulling the fuse can allow this to ‘reset’ and the drain will be lost and go un-diagnosed.

APPENDIX A BATTERY TEST PROCESS

It is recommended that this test is conducted at least 24 hours after the vehicle engine has been run or the battery charged to avoid the need of surface charge removal or if this time constraint is unacceptable due to circumstances, then conduct the charge strip removal process.

Part 1 - Surface Charge Removal

• NOTE: Before carrying out a battery test you must ensure that there is no battery surface charge present.

• NOTE: The battery may be tested either on a bench or on the vehicle.

- In the case of on-vehicle testing, the battery must be isolated from the vehicle by removal of the battery negative (-) cable from the battery terminal before the measurement is taken unless the vehicle has a transit relay fitted or is in transit mode.

A vehicle which has had its battery charged or been driven in a 24 hour period before the test, must have its surface charge removed using one of the following methods:

1. If 24 hours have passed since the last time the engine was run or the battery charged, proceed to `Part 2 - Battery Test'.

2. Turn on the ignition. Switch on the headlamps on high beam for a minimum 3 minutes.

3. Switch off the headlamps. For vehicles tested after the transit relay has been removed, disconnect the battery by removal of the negative (-) cable. Vehicles with a transit relay fitted or with a low current transport mode enabled do not need to have the battery disconnected.

4. Wait a maximum of 5 minutes before recording test results for any battery measurements.

Part 2 - Battery Test

• NOTE: The battery surface charge must be removed before this test in accordance with the procedure in Part 1 above. Ensure that the battery terminal connectors are clean. When connecting the Midtronics testing equipment, connect the RED clip to the positive (+) battery terminal first, and then connect the BLACK clip to the negative (-) battery terminal. Rock the clips backward and forward to ensure a good connection to the battery.

• NOTE: Midtronics 393, 394. 493 and 494 testers must not be used to test AGM batteries as these testers are not capable of correctly testing AGM batteries and can give an incorrect result. For AGM battery testing use the EXP1080 tester or the GR1 Diagnostics charger.

CAUTION: **DO NOT** connect the tester to any other circuit or chassis point other than the battery negative terminal.

1. Attach the Midtronics tester to the battery.

2. Follow the instructions on the tester to test the battery. Ensure the correct battery type and size is selected.

3. Perform the action based on the tester results (see table below).

4. Enter the readings and test code obtained on the Battery Report Form (Appendix B) or equivalent which records as a minimum the technician's name, Vehicle Identification Number (VIN), Date of check, Midtronics code and Battery Voltage from the Midtronics tester.

At the end of the test, the battery negative (-) cable should be re-attached to the battery terminal.

TESTER RESULTS	ACTION
GOOD BATTERY	Return to service.
GOOD RE-CHARGE	Fully charge battery and return to service.
CHARGE AND RE-TEST	Fully charge battery. Remove surface charge. Re-test battery. If same result replace battery.
REPLACE BATTERY OR BAD CELL BATTERY	Verify surface charge removed. Disconnect battery from vehicle and re-test. If result repeats after surface charge removal, replace battery. **DO NOT RECHARGE**.
UNABLE TO DO TEST	Disconnect battery from vehicle and re-test.

APPENDIX B : BATTERY REPORT FORM - IN SERVICE BATTERIES ONLY

• NOTE: Fields marked with * are mandatory and must be completed.

General Information	YES / NO		YES / NO	
Customer Name:		Dealer/Retailer Code:	*	
Repair Order Number:	*	Battery Date Code:	*	
Repair Order Date:	*	Number of Times Battery Charged:	*	
Repair Order Date:		Technicians Name:	*	
Vehicle Identification Number (VIN):	*	Technicians Signature:	*	
Give a detailed description of the symptoms experienced by the customer (attach a separate sheet if necessary)				
-				
-				
-				
-				
-				
-				
Diagnostics (Battery Testing)				
1: Loose battery clamps	Yes	*	No	*
2: Loose hold down clamps	Yes		No	
3: Corroded terminal posts	Yes	*	No	*
4: Physical damage/leaks	Yes		No	
5: Low electrolyte	Yes	*	No	*
6: FEAD belt tension	OK	*	Not OK	*
7: Surface charge removed	Yes	*	No	*
8: Voltage (appendix A)	Yes	*	No	*
9: Quiescent Drain	mA	*		
10: Vent tube correctly installed	Yes		No	
11: Midtronics test				
Code before charging	*			
If Midtronics indicates that the battery needs re-charging, charge the battery for 24 hours				
Code after charge	*			
Result after charge	*			
If "good and re-charge" charge the battery for an additional 24 hours.				
If "charge and re-test" for both before and after 24 hours charge renew the battery				
Only renew the battery if "renew battery", "bad cell" or charge and re-test has been displayed twice.				
Comments				
-				
-				
-				
-				
-				

Published: 28-Sep-2011

Battery and Charging System - General Information - Quiescent Drain

Description and Operation

QUIESCENT DRAIN - TYPICAL VALUES

• NOTE: The quiescent drain after the initial shutdown period should not exceed the value shown in the table.

Jaguar Quiescent Drain Values

MODEL	SHUT DOWN PERIOD (minutes)	TYPICAL VALUES BATTERY DRAIN (mA)
XJS 3.2	60	<30
Sovereign 3.2	60	<37.3
XJ6 4.0	60	<38.6
XJS	60	<43.9
XJ6 (X300) (1995MY)	60	<43
XJ8 (X300)	60	<30
XK8 (X100)	60	<30
S-Type (X200)	60	<30
X-Type (X400)	30	<30
XJ6 (X350)	40	<30
XJ8 (X350)	40	<30
XK (X150)	3 (after lock/arm condition) [2]	<30
	33 (unlocked)	<30
XF (X250)	3 (after lock/arm condition) [2]	<30
	33 (unlocked)	<30
XJ (X351)	3 (afterlock/arm condition) [2]	<30
	33 (unlocked)	<30

• NOTE:

1. The total current drain will be higher if certain approved accessories are fitted (for example: tracker, trailer module, etc.)

2. Applies to vehicles without Tire Pressure Monitoring System (TPMS). Vehicle shut-down period with TPMS is approximately 15 minutes.

Battery and Charging System - General Information - Charging System2.0L NA V6 - AJV6 / 2.5L NA V6 - AJV6 / 3.0L NA V6 - AJ27

Diagnosis and Testing

Inspection and Verification

1. **1.** Verify the customer concern by operating the system.
2. **2.** Visually inspect for obvious signs of mechanical and electrical damage.

Visual Inspection Chart

Mechanical	Electrical
• Drive belt • Drive belt tensioner • Generator • Generator pulley (vehicles fitted with manual transmission)	• Battery • Generator • Fuse • Circuit • Wiring harness for damage or corrosion • Electrical connectors • Warning lamp operation

3. **3.** If an obvious cause for an observed or reported concern is found, correct the cause (if possible) before proceeding to the next step.
4. **4.** If the cause is not visually evident, verify the symptom and refer to the Jaguar Approved Diagnostic System.

Symptom chart

Charging system faults / codes and related causes

Symptom	Possible Sources	Action
DTC P1146 Low input from the Engine control module (ECM) on the voltage regulator request signal wire	* Circuit. * Generator. * ECM.	* GO to Pinpoint Test B.
DTC P1244 Generator overcharging	* Generator. * Circuit. * Battery.	* GO to Pinpoint Test C.
DTC P1629 Generator load monitoring signal failure	* Circuit. * Generator. * ECM.	* GO to Pinpoint Test D.
DTC P1632 Charging system failure	* Fuse 82 (20A). * Circuit. * Generator. * Battery. * ECM.	* GO to Pinpoint Test A.
The charging system warning indicator is on, intermittent or flickers with the engine running	* Accessory drive belt. * Fuse 82 (20A). * Circuit. * Generator. * Generator pulley (vehicles fitted with manual transmission). * Battery. * ECM. * Instrument cluster (IC). * Control area network (CAN).	* CHECK the accessory drive belt tension. For additional information, refer to Section 303-05 Accessory Drive . * GO to Pinpoint Test A.
Generator not charging, battery keeps going flat	* Accessory drive belt. * Fuse 82 (20A). * Circuit. * Generator. * Generator pulley (vehicles fitted with manual transmission). * Battery.	* CHECK drive belt tension. For additional information, refer to Section 303-05 Accessory Drive . * GO to Pinpoint Test A.
Generator noisy	* Accessory drive belt. * Accessory drive belt tensioner. * Generator pulley (vehicles fitted with manual transmission).	* CHECK the accessory drive belt and tensioner. For additional information, refer to Section 303-05 Accessory Drive . * GO to Pinpoint Test G.
Radio interference	* Circuit. * Generator.	* GO to Pinpoint Test H.

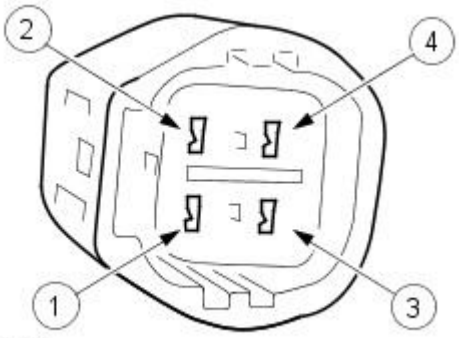

VUJ0004301

Generator Electrical Connector (EN49, Harness Side)

Pin Number	Circuit Function	Circuit Color
1	Voltage Request Input Signal from ECM	Red/Green
2	Power Supply (12 volts) from Fuse 82 of the Passenger Compartment Fuse Box	Green/Red
3	PWM Output Signal to ECM	Orange/Green

Pin Number	Circuit Function	Circuit Color
4	Generator Charge Warning Indicator Lamp Output Signal to ECM	Blue

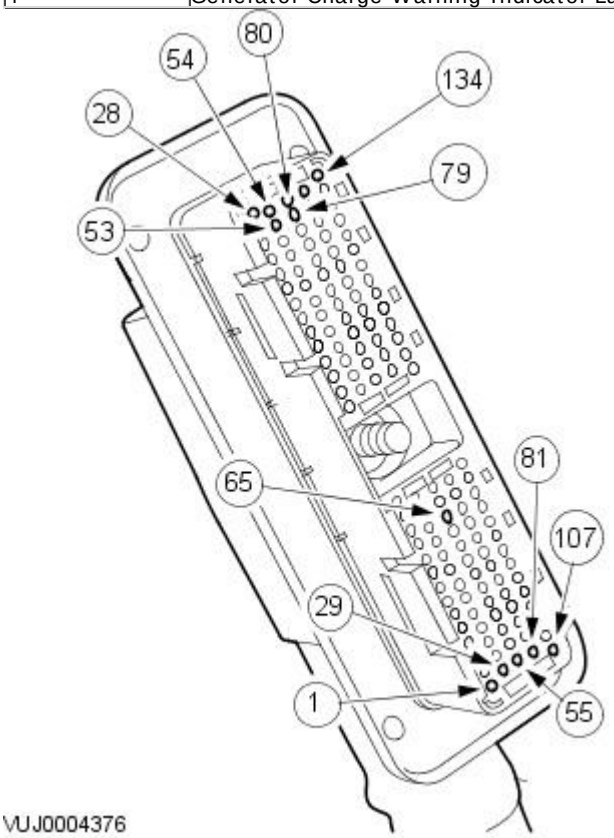

Engine Control Module (ECM) Electrical Connector (EN16, Harness Side)

Pin Number	Circuit Function	Circuit Color
53	Voltage Request Output Signal to Generator	Red/Green
65	PWM Input Signal from Generator	Orange/Green
79	Generator Charge Warning Indicator Lamp Input Signal from Generator	Blue

PINPOINT TEST A : LOW INPUT ON THE VOLTAGE REGULATOR REQUEST SIGNAL WIRE FROM THE ECM (P1146)	
TEST CONDITIONS	**DETAILS/RESULTS/ACTIONS**
A1: CHECK THE VOLTAGE REGULATOR REQUEST SIGNAL WIRE FOR A SHORT TO GROUND	
	1 Disconnect the ECM electrical connector EN16 and the generator electrical connector EN49.
	2 Measure the resistance between electrical connector EN49-1 and ground.
	Is the resistance less than 10,000 ohms? **Yes** REPAIR short to ground between the generator and the ECM. CLEAR the DTC. TEST the system for normal operation. **No** GO to A2. .
A2: CHECK THE VOLTAGE REGULATOR REQUEST SIGNAL WIRE FOR OPEN CIRCUIT	
	1 Measure the resistance between electrical connector EN49-1 and the ECM electrical connector EN16-53.
	Is the resistance less than 5 ohms? **Yes** REPAIR the circuit from the ECM to the generator. CLEAR the DTC. TEST the system for normal operation. **No** GO to A3. .
A3: CHECK THE OPERATION OF THE GENERATOR CHARGE WARNING INDICATOR LAMP	
	1 Connect the ECM electrical connector EN16 and the generator electrical connector EN49.
	2 Clear the DTC. START and RUN the engine at 1500 RPM with no electrical load applied.
	Does the generator charge warning indicator lamp illuminate within 30 seconds of the engine being started? **Yes** INSTALL a new generator. CLEAR the DTC. TEST the system for normal operation. If the DTC is repeated, INSTALL a new ECM. For additional information, refer to Section 303-14A Electronic Engine ControlsSection 303-14B Electronic Engine Controls . **No** GO to A4. .
A4: CHECK THE OPERATION OF THE GENERATOR CHARGE WARNING INDICATOR LAMP AFTER 15 MINUTES	
	1 RUN the engine at idle for 15 minutes and then increase the engine speed to 1500 RPM for one minute with no electrical load applied.
	Does the generator charge warning indicator lamp illuminate or is the DTC repeated? **Yes** INSTALL a new generator. CLEAR the DTC. TEST the system for normal operation. If the DTC is repeated, INSTALL a new ECM. For additional information, refer to Section 303-14A Electronic Engine ControlsSection 303-14B Electronic Engine Controls . **No** DIAGNOSE the ECM. For additional information, refer to Section 303-14A Electronic Engine ControlsSection 303-14B Electronic Engine Controls .

PINPOINT TEST B : GENERATOR OVERCHARGING (P1244)	
TEST CONDITIONS	**DETAILS/RESULTS/ACTIONS**
B1: CHECK THE VOLTAGE REGULATOR REQUEST SIGNAL WIRE FOR A SHORT TO BATTERY POSITIVE	
	1 Disconnect the ECM electrical connector EN16 and the generator electrical connector EN49.

	2 Measure the resistance between electrical connector EN49-1 and the generator battery positive cable.
	Is the resistance less than 10,000 ohms? **Yes** REPAIR short to the generator battery positive cable. CLEAR the DTC. TEST the system for normal operation. **No** GO to B2. .
B2: CHECK THE VOLTAGE REGULATOR REQUEST SIGNAL WIRE FOR OPEN CIRCUIT	
	1 Measure the resistance between electrical connector EN49-1 and the ECM electrical connector EN16-53.
	Is the resistance less than 5 ohms? **Yes** REPAIR the circuit from the ECM to the generator. CLEAR the DTC. TEST the system for normal operation. **No** INSTALL a new generator. CLEAR the DTC. TEST the system for normal operation. If the DTC is repeated, INSTALL a new ECM. For additional information, refer to Section 303-14A Electronic Engine ControlsSection 303-14B Electronic Engine Controls .

PINPOINT TEST C : CHARGING SYSTEM FAILURE (P1632)	
TEST CONDITIONS	**DETAILS/RESULTS/ACTIONS**
C1: CHECK THE BATTERY VOLTAGE WITH THE ENGINE RUNNING AND NO ELECTRICAL LOADS APPLIED	
	1 START and RUN the engine at 1500 RPM with no electrical load applied.
	2 Measure the battery voltage.
	Is the voltage less than 14.5 volts? **Yes** GO to C2. . **No** INSTALL a fully charged battery.GO to C4. .
C2: CHECK CONTINUITY OF THE VOLTAGE REGULATOR REQUEST SIGNAL WIRE	
	1 Disconnect the ECM electrical connector EN16 and the generator electrical connector EN49.
	2 Measure the resistance between electrical connector EN49-1 and the ECM electrical connector EN16-53.
	Is the resistance less than 5 ohms? **Yes** REPAIR the circuit from the ECM to the generator. Clear the DTC. TEST the system for normal operation. **No** GO to C3. .
C3: CHECK THE VOLTAGE REGULATOR REQUEST SIGNAL WIRE FOR A SHORT GROUND	
	1 Measure the resistance between electrical connector EN49-1 and the ECM electrical connector EN16-53.
	Is the resistance less than 10,000 ohms? **Yes** REPAIR the circuit from the ECM to the generator. Clear the DTC. TEST the system for normal operation. **No** INSTALL a new generator. CLEAR the DTC. TEST the system for normal operation. If the DTC is repeated, INSTALL a new ECM. For additional information, refer to Section 303-14A Electronic Engine ControlsSection 303-14B Electronic Engine Controls .
C4: CHECK THE GENERATOR CHARGE WARNING INDICATOR LAMP AND COOLING FAN OPERATION WITH THE ENGINE RUNNING AT IDLE SPEED	
	1 START and RUN the engine at idle speed for 15 minutes with no electrical load applied.
	Is the generator charge warning indicator lamp illuminated and the cooling fans operating at maximum speed? **Yes** GO to C6. . **No** GO to C5. .
C5: CHECK THE GENERATOR CHARGE WARNING INDICATOR LAMP AND COOLING FAN OPERATION WITH THE ENGINE RUNNING FOR A FURTHER MINUTE AT 1500 RPM.	
	1 Increase the engine speed to 1500 RPM for one minute with no electrical load applied.
	Is the generator charge warning indicator lamp illuminated? **Yes** INSTALL a new generator. CLEAR the DTC. TEST the system for normal operation. If the DTC is repeated, INSTALL a new ECM. For additional information, refer to Section 303-14A Electronic Engine ControlsSection 303-14B Electronic Engine Controls . **No** INSTALL a fully charged slave battery. CLEAR the DTC. TEST the system for normal operation.
C6: CHECK FOR A SHORT TO BATTERY POSITIVE CABLE	
	1 Disconnect the ECM electrical connector EN16 and the generator electrical connector EN49.
	2 Measure the resistance between electrical connector EN49-1 and the generator battery positive cable.
	Is the resistance less than 10,000 ohms? **Yes** REPAIR the circuit from the ECM to the generator. CLEAR the DTC. TEST the system for normal operation. **No** INSTALL a new generator. CLEAR the DTC. TEST the system for normal operation. If the DTC is repeated, INSTALL a new ECM. For additional information, refer to Section 303-14A Electronic Engine ControlsSection 303-14B Electronic Engine Controls .

PINPOINT TEST D : GENERATOR LOAD MONITORING SIGNAL FAILURE (P1629)	
TEST CONDITIONS	**DETAILS/RESULTS/ACTIONS**
D1: CHECK THE SIGNAL WIRE FOR OPEN CIRCUIT	
	1 Disconnect the ECM electrical connector EN16 and the generator electrical connector EN49.
	2 Measure the resistance between electrical connector EN49-3 and the ECM electrical connector EN16-65.
	Is the resistance less than 5 ohms? **Yes** GO to D2. . **No** REPAIR the circuit from the ECM to the generator. CLEAR the DTC. TEST the system for normal operation.
D2: CHECK THE SIGNAL WIRE FOR A SHORT TO BATTERY POSITIVE	
	1 Measure the resistance between electrical connector EN49-3 and the generator battery positive cable.

	Is the resistance less than 10,000 ohms? **Yes** REPAIR short to the generator battery positive cable. CLEAR the DTC. TEST the system for normal operation. **No** GO to D3. .
D3: CHECK THE SIGNAL WIRE FOR A SHORT TO GROUND	
	1 Measure the resistance between electrical connector EN49-3 and ground.
	Is the resistance less than 10,000 ohms? **Yes** REPAIR the circuit from the ECM to the generator. CLEAR the DTC. TEST the system for normal operation. **No** INSTALL a new generator. CLEAR the DTC. TEST the system for normal operation. If the DTC is repeated, INSTALL a new ECM. For additional information, refer to Section 303-14A Electronic Engine ControlsSection 303-14B Electronic Engine Controls .

PINPOINT TEST E : THE GENERATOR CHARGE WARNING INDICATOR LAMP IS ON WITH THE ENGINE RUNNING	
TEST CONDITIONS	**DETAILS/RESULTS/ACTIONS**
E1: CHECK THE BATTERY VOLTAGE	
	1 Measure the battery voltage.
	Is the voltage less than 12 volts? **Yes** Charge the battery.GO to E2. . **No** GO to E3. .
E2: CHECK THE BATTERY	
	1 Carry out a Battery Condition Test.
	Is the battery OK? **Yes** GO to E3. . **No** INSTALL a new battery. TEST the system for normal operation.
E3: CHECK THE BATTERY VOLTAGE WITH THE ENGINE RUNNING AND NO ELECTRICAL LOADS APPLIED	
	1 START and RUN the engine at 1500 RPM. Measure the battery voltage.
	Is the voltage less than 13 volts? **Yes** For vehicles fitted with manual transmissionGO to E4. . For vehicles fitted with automatic transmissionGO to E5. . **No** GO to E11. .
E4: CHECK THE GENERATOR DRIVE PULLEY (VEHICLES FITTED WITH MANUAL TRANSMISSION)	
	1 REMOVE the accessory drive belt. For additional information, refer to Section 303-05 Accessory Drive . 2 ROTATE the generator pulley by hand.
	Does the alternator rotor shaft rotate with the pulley? **Yes** GO to E5. . **No** INSTALL a new generator. TEST the system for normal operation.
E5: CHECK THE GENERATOR OUTPUT VOLTAGE AT THE GENERATOR BATTERY POSITIVE CABLE TERMINAL, WITH THE ENGINE RUNNING AND NO ELECTRICAL LOADS APPLIED	
	1 START and RUN the engine at 1500 RPM. Measure the voltage between the generator battery positive cable electrical connector; ST4 and ground.
	Is the voltage less than 13 volts? **Yes** GO to E6. . **No** REPAIR the permanent live supply circuit from the battery to the generator. TEST the system for normal operation.
E6: CHECK THE GENERATOR GROUND CIRCUIT	
	1 Measure the resistance between the generator casing and the battery ground terminal.
	Is the resistance less than 5 ohms? **Yes** GO to E7. . **No** REPAIR the ground circuit between the generator and the battery ground terminal. TEST the system for normal operation.
E7: CHECK IGNITION SUPPLY VOLTAGE TO THE GENERATOR	
	1 Turn the ignition switch to the RUN position. Measure the voltage between the generator ignition supply terminal, EN49-2 and ground.
	Is the voltage less than 10 volts? **Yes** GO to E8. . **No** INSTALL a new generator. TEST the system for normal operation.
E8: CHECK FUSE 82 IN THE PASSENGER COMPARTMENT FUSE BOX	
	1 Check the fuse.
	Is the fuse OK? **Yes** GO to E9. . **No** GO to E10. .
E9: CHECK FOR IGNITION SUPPLY VOLTAGE AT FUSE 82 OF THE PASSENGER COMPARTMENT FUSE BOX	
	1 Turn the ignition switch to the RUN position. Measure the voltage between the passenger compartment fuse box; JB51-14 and ground.
	Is the voltage less than 10 volts? **Yes** REPAIR the circuit between the passenger compartment fuse box and the ignition relay. TEST the system for normal operation. **No** REPAIR the circuit between the passenger compartment fuse box and the generator. TEST the system for normal

	operation.
E10: CHECK FUSE 82 OF THE PASSENGER COMPARTMENT FUSE BOX FOR A SHORT TO GROUND	
	1 Measure the resistance between electrical connector JB51-14 of the passenger compartment fuse box and ground.
	Is the resistance less than 10,000 ohms? **Yes** REPAIR short to ground between the passenger compartment fuse box and the generator. INSTALL a new fuse. TEST the system for normal operation. **No** INSTALL a new fuse. TEST the system for normal operation.
E11: CHECK THE CONTINUITY OF THE GENERATOR CHARGE WARNING INDICATOR LAMP SIGNAL WIRE	
	1 Disconnect the ECM electrical connector; EN16 and the generator electrical connector; EN49.
	2 Measure the resistance between EN49-4 and EN1-79.
	Is the resistance less than 5 ohms? **Yes** Refer to the approved Jaguar diagnostic system. **No** REPAIR the circuit from the ECM to the generator. TEST the system for normal operation.

PINPOINT TEST F : GENERATOR NOT CHARGING — BATTERY KEEPS GOING FLAT

TEST CONDITIONS	DETAILS/RESULTS/ACTIONS
F1: CHECK THE CHARGE WARNING LAMP IS ILLUMINATED WITH THE ENGINE RUNNING	
	1 START and RUN the engine at 1500 RPM. INSPECT the generator charge warning indicator lamp.
	Is the warning lamp illuminated? **Yes** GO to F2. . **No** GO to F4. .
F2: CHECK THE BATTERY VOLTAGE WITH IGNITION OFF AND NO ELECTRICAL LOADS APPLIED	
	1 Measure the battery voltage.
	Is the voltage less than 12 volts? **Yes** Charge the battery.GO to F3. . **No** GO to F4. .
F3: CHECK THE BATTERY	
	1 Carry out a Battery Condition Test.
	Is the battery OK? **Yes** GO to F4. . **No** INSTALL a new battery. TEST the system for normal operation.
F4: CHECK THE BATTERY VOLTAGE WITH THE ENGINE RUNNING AND NO ELECTRICAL LOADS APPLIED	
	1 START and RUN the engine at 1500 RPM. Measure the battery voltage.
	Is the voltage less than 13 volts? **Yes** For vehicles fitted with manual transmissionGO to F5. . For vehicles fitted with automatic transmissionGO to F6. . **No** GO to F10. .
F5: CHECK THE GENERATOR DRIVE PULLEY (VEHICLES FITTED WITH MANUAL TRANSMISSION)	
	1 REMOVE the accessory drive belt. For additional information, refer to Section 303-05 Accessory Drive .
	2 ROTATE the generator pulley by hand.
	Does the alternator rotor shaft rotate with the pulley? **Yes** GO to F6. . **No** INSTALL a new generator. TEST the system for normal operation.
F6: CHECK THE GENERATOR OUTPUT VOLTAGE AT THE GENERATOR MAIN TERMINAL WITH THE ENGINE RUNNING AND NO ELECTRICAL LOADS APPLIED	
	1 START and RUN the engine at 1500 RPM. Measure the voltage between the generator main output electrical connector; ST4 and ground.
	Is the voltage less than 13 volts? **Yes** GO to F7. . **No** REPAIR the permanent live supply circuit from the battery to the generator. TEST the system for normal operation.
F7: CHECK FUSE 82 IN THE PASSENGER COMPARTMENT FUSE BOX	
	1 Check the fuse.
	Is the fuse OK? **Yes** GO to F9. . **No** GO to F8. .
F8: CHECK FUSE 82 OF THE PASSENGER COMPARTMENT FUSE BOX FOR A SHORT TO GROUND	
	1 Measure the resistance between electrical connector JB51-14 of the passenger compartment fuse box and ground.
	Is the resistance less than 10,000 ohms? **Yes** REPAIR short to ground between the passenger compartment fuse box and the generator. INSTALL a new fuse. TEST the system for normal operation. **No** INSTALL a new fuse. TEST the system for normal operation.
F9: CHECK FOR IGNITION SUPPLY VOLTAGE AT FUSE 82 OF THE PASSENGER COMPARTMENT FUSE BOX	
	1 Turn the ignition switch to the RUN position. Measure the voltage between the passenger compartment fuse box; JB51-14 and ground.

	Is the voltage less than 10 volts? **Yes** REPAIR the circuit between the passenger compartment fuse box and the ignition relay. TEST the system for normal operation. **No** REPAIR the circuit between the passenger compartment fuse box and the generator. TEST the system for normal operation.
F10: CHECK THE CONTINUITY OF THE GENERATOR CHARGE WARNING INDICATOR LAMP SIGNAL WIRE	
	1 Disconnect the ECM electrical connector EN16 and the generator electrical connector EN49.
	2 Measure the resistance between EN49-4 and EN1-79.
	Is the resistance less than 5 ohms? **Yes** Refer to the approved Jaguar diagnostic system. **No** REPAIR the circuit from the ECM to the generator. TEST the system for normal operation.

PINPOINT TEST G : GENERATOR NOISY

TEST CONDITIONS	DETAILS/RESULTS/ACTIONS
G1: CHECK GENERATOR FOR SECURITY	
	1 INSPECT the generator fixings.
	Is the generator loose? **Yes** TIGHTEN generator fixings. TEST the system for normal operation. **No** GO to G2. .
G2: CHECK THE ACCESSORY DRIVE BELT	
	1 REMOVE and INSPECT the accessory drive belt. For additional information, refer to Section 303-05 Accessory Drive .
	Is the accessory drive belt OK? **Yes** GO to G3. . **No** INSTALL a new accessory drive belt. TEST the system for normal operation.
G3: CHECK THE ACCESSORY DRIVE BELT TENSIONER	
	1 REMOVE and INSPECT the accessory drive belt tensioner. For additional information, refer to Section 303-05 Accessory Drive .
	Is the accessory drive belt tensioner OK? **Yes** GO to G4. . **No** INSTALL a new accessory drive belt tensioner. For additional information, refer to Section 303-05 Accessory Drive . TEST the system for normal operation.
G4: CHECK GENERATOR FOR MECHANICAL NOISE	
	1 ROTATE the generator pulley by hand.
	Does the generator rotor shaft rotate smoothly? **Yes** For vehicles fitted with manual transmissionGO to G5. . For vehicles fitted with automatic transmissionGO to G6. . **No** INSTALL a new generator. TEST the system for normal operation.
G5: CHECK GENERATOR DRIVE PULLEY (VEHICLES FITTED WITH MANUAL TRANSMISSION)	
	1 ROTATE the generator pulley quickly by hand.
	2 Stop the generator pulley from spinning by holding the pulley.
	Does the generator rotor shaft continue to rotate? **Yes** GO to G6. . **No** INSTALL a new generator. TEST the system for normal operation.
G6: CHECK THE ACCESSORY DRIVE BELT IDLER PULLEYS	
	1 ROTATE the accessory drive belt idler pulleys by hand.
	Do the accessory drive belt idler pulleys rotate smoothly? **Yes** GO to G7. . **No** INSTALL new accessory drive belt pulleys as necessary. TEST the system for normal operation.
G7: CHECK GENERATOR FOR ELECTRICAL NOISE	
	1 INSTALL the accessory drive belt. For additional information, refer to Section 303-05 Accessory Drive .
	2 START and RUN the engine at 1500 RPM. APPLY a high electrical load to the battery.
	Is the noise only heard with the high electrical load applied? **Yes** GO to G8. . **No** CHECK the air conditioning compressor. For additional information, refer to Section 412-03 Air Conditioning . CHECK the power steering pump. For additional information, refer to Section 211-02 Power Steering . TEST the system for normal operation.
G8: ELIMINATE THE GENERATOR AS THE CAUSE OF ELECTRICAL NOISE	
	1 REMOVE fuse 82 from the passenger compartment fuse box.
	2 START and RUN the engine at 1500 RPM.
	Is the noise still present? **Yes** CHECK the air conditioning compressor. For additional information, refer to Section 412-03 Air Conditioning . CHECK the power steering pump. For additional information, refer to Section 211-02 Power Steering . TEST the system for normal operation. **No** INSTALL a new generator. TEST the system for normal operation.

PINPOINT TEST H : RADIO INTERFERENCE

TEST CONDITIONS	DETAILS/RESULTS/ACTIONS
H1: CHECK THE GENERATOR FOR THE CAUSE OF RADIO INTERFERENCE	
	1 START and RUN the engine at 1500 RPM.
	2 TURN the radio switch to the ON position.
	Is radio interference present? **Yes** GO to H3. . **No** GO to H2. .
H2: CHECK THE GENERATOR FOR THE CAUSE OF RADIO INTERFERENCE WITH A HIGH ELECTRICAL LOAD APPLIED TO THE BATTERY	
	1 START and RUN the engine at 1500 RPM
	2 APPLY a high electrical load to the battery.
	3 TURN the radio switch to the ON position.
	Is radio interference present? **Yes** GO to H3. . **No** DIAGNOSE the entertainment system. For additional information, refer to Section 415-00 Information and Entertainment System - General Information .
H3: ELIMINATE THE GENERATOR AS THE CAUSE OF RADIO INTERFERENCE	
	1 REMOVE fuse 82 from the passenger compartment fuse box.
	2 START and RUN the engine at 1500 RPM.
	3 TURN the radio switch to the ON position.
	Is radio interference still present? **Yes** Diagnose the Entertainment System. For additional information, refer to Section 415-00 Information and Entertainment System - General Information . **No** CLEAN and TIGHTEN all mounting points, positive and ground cable connections. INSTALL fuse 82 in the passenger compartment fuse box. TEST the system for normal operation. If interference is still present, INSTALL a new generator.

Base Voltage Test

• NOTE: Prior to running this test, turn the headlamps on for 30 seconds to remove any surface charge from the battery. Wait until the voltage stabilizes before carrying out the base voltage test.

1. **1.** With the ignition switch in the OFF position and no electrical loads applied to the battery, connect the negative lead of a digital multimeter to the battery ground cable clamp.
2. **2.** Connect the positive lead of the digital multimeter to the battery positive terminal cable clamp.
3. **3.** Read and record the battery voltage shown on the digital multimeter. This is called base voltage and will be used in later tests.

No-Load Test

1. **1.** Connect the digital multimeter leads across the battery terminals.
2. **2.** Read the voltage (base voltage). If the battery voltage is less than 12 volts. Charge the battery before test.
3. **3.** Start the engine.
4. **4.** Run the engine to 1500 RPM with no electrical load applied to the battery.
5. **5.** Read the voltage. If the voltage increase is less than 0.5 volts above the base voltage, carry out the Battery Condition Test. If there is no voltage increase, diagnose the charging system. For additional information refer to the symptom chart.

Battery Condition Test

• WARNINGS:

Batteries contain sulphuric acid and explosive mixtures of Hydrogen and Oxygen gasses; protective clothing should be worn to avoid the risk of personal injury.

Avoid sparks and all sources of ignition when working on the battery.

• CAUTIONS:

Do not carry out this test if the battery voltage is below 12.5 volts.

Do not carry out this test for longer than 15 seconds or damage to the battery may occur.

• NOTE: Make sure that the high rate discharge tester is capable of applying a load of 300 Amps to the battery.

1. **1.** Connect the high rate discharge tester to the battery.
2. **2.** Observe and record the voltage reading of the battery.
3. **3.** Turn the switch to the ON position for 15 seconds.
4. **4.** Observe and record the minimum voltage reading of the battery.
5. **5.** Turn the switch to the OFF position.
6. **6.** Observe the voltage reading of the battery.

The battery voltage should not fall below 9.6 volts at a temperature of 21°C (70°F) when carrying out the test.

The battery should recover to the original voltage when the test is complete.

Battery and Charging System - General Information - Charging System2.0L Duratorq-TDCi/2.2L Duratorq-TDCi (110kW/150PS) - Puma

Diagnosis and Testing

Principle of operation

The diesel charging system differs from that used in petrol-engined variants in that it incorporates a **'smartcharge'** function.

This function is capable of supplying infinitely variable voltages to the battery, depending on the temperature and on the current requirements of the battery.

The system continuously monitors the battery voltage and temperature (via the ambient air temperature sensor), and uses a map of both to deliver the optimum charge to the battery.

Another feature of this system is that it uses a 'wake-up' and 'sleep' strategy, initiated by the ignition switch position and engine control module (ECM) to avoid current drain.

Inspection and Verification

1. **1.** Verify the customer concern.
2. **2.** Visually inspect for obvious signs of mechanical or electrical damage.
3. **3.** Check the vehicle battery condition and state of charge before condemning any of the charging system components. For additional information, refer to the battery care manual.

Visual Inspection Chart

Mechanical	Electrical
• Generator • Drive belt • Drive belt tensioner • Generator pulley • Check the security of the generator fittings	• Generator • Battery • Charging system warning light function (ignition **ON**, engine **OFF**) • Fuse 36 (7.5A) front power distribution box (battery voltage sense) • Engine/Generator ground connection • Circuit(s) • Electrical connector(s) • Engine control module (ECM)

4. **4.** If an obvious cause for an observed or reported concern is found, correct the cause (if possible) before proceeding to the next step.
5. **5.** If the cause is not visually evident and the Jaguar approved diagnostic system is not available, use a scan tool to retrieve the fault codes before proceeding to the symptom chart.

CAUTION: When probing connectors to take measurements in the course of the pinpoint tests, use the adaptor kit, part number 3548-1358-00.

• NOTE: When performing electrical voltage or resistance tests, always use a digital multimeter (DMM) accurate to 3 decimal places, and with an up-to-date calibration certificate. When testing resistance, always take the resistance of the DMM leads into account.

• NOTE: Check and rectify basic faults before beginning diagnostic routines involving pinpoint tests.

Symptom Chart

• NOTE: For a full list of DTCs,
REFER to: Electronic Engine Controls (303-14B Electronic Engine Controls - 2.0L Duratorq-TDCi/2.2L Duratorq-TDCi (110kW/150PS) - Puma, Diagnosis and Testing).

DTC	Condition	Possible Source	Action
P0622	Generator monitor circuit fault	• Generator monitor circuit: open circuit, high resistance, short circuit to B+, short circuit to ground • Generator regulator failure • ECM fault	For generator monitor circuit tests, GO to Pinpoint Test C.
P0623	Generator warning light circuit fault	• Generator warning light circuit: open circuit, short circuit	For generator warning light circuit tests, REFER to: Electronic Engine Controls (303-14B Electronic Engine Controls - 2.0L Duratorq-TDCi/2.2L Duratorq-TDCi (110kW/150PS) - Puma, Diagnosis and Testing).
P1632	Generator communications circuit fault	• Generator communications circuit: open circuit, high resistance, short circuit to B+, short circuit to ground • Generator regulator failure • ECM fault	For generator communications circuit tests, GO to Pinpoint Test D.
None	The battery warning light is on, intermittent, or flickers with the engine running	• Battery, low voltage • Accessory drive belt tension • Generator failure • ECM • Instrument cluster (IC) fault	Check the battery condition and state of charge. Refer to the battery care manual. Check the accessory drive belt tension, REFER to: Accessory Drive Belt Tensioner - 2.0L Duratorq-TDCi/2.2L Duratorq-TDCi (110kW/150PS) - Puma (303-05 Accessory Drive, Removal and Installation). Check the generator output, GO to Pinpoint Test B. and GO to Pinpoint Test A. . For CAN circuit tests, REFER to: Communications Network - VIN Range: E96603->J28492 (418-00 Module Communications Network, Diagnosis and Testing).

DTC	Condition	Possible Source	Action
None	The battery keeps discharging	• Battery fault • Battery cables • Battery quiescent drain • Accessory drive belt tension • Generator failure • Generator pulley fault	Check the battery condition and state of charge. Refer to the battery care manual. Check the volt drop across the charging circuit, GO to Pinpoint Test G. Check the accessory drive belt tension, REFER to: Accessory Drive Belt Tensioner - 2.0L Duratorq-TDCi/2.2L Duratorq-TDCi (110kW/150PS) - Puma (303-05 Accessory Drive, Removal and Installation). Check the generator output, GO to Pinpoint Test B. and GO to Pinpoint Test A. Check that the generator pulley does not turn independently of the generator.
None	Generator noisy	• Generator failure • Accessory drive belt tension • Accessory drive belt • Accessory drive belt tensioner	For generator mechanical tests, GO to Pinpoint Test E. Check the accessory drive belt and tensioners, REFER to: Accessory Drive Belt Tensioner - 2.0L Duratorq-TDCi/2.2L Duratorq-TDCi (110kW/150PS) - Puma (303-05 Accessory Drive, Removal and Installation).
None	Radio interference	• Generator • Wiring harness	For interference tests, GO to Pinpoint Test F.

Pinpoint tests

PINPOINT TEST A : CHECK THE GENERATOR OUTPUT UNDER LOAD AT IDLE	
TEST CONDITIONS	**DETAILS/RESULTS/ACTIONS**
A1: CHECK THE GENERATOR OUTPUT AT IDLE	
	1 Start the engine and allow to idle.
	2 Turn the headlights **ON**.
	3 With the engine idling, measure the voltage between the battery positive terminal and GROUND over ten seconds.
	Was the average voltage greater than 12.85 volts? **Yes** GO to A2. **No** Check the volt drop across the charging circuit, GO to Pinpoint Test G. . If the volt drop is within limits, install a new generator. REFER to: Generator.
A2: CHECK THE GENERATOR OUTPUT AT IDLE FOR OVERCHARGE	
	1 With the engine idling and headlights still **ON**, measure the voltage between the battery positive terminal and GROUND over ten seconds.
	Was the average voltage greater than 15.25 volts? **Yes** The generator is overcharging. INSTALL a new generator. REFER to: Generator. **No** Charging system is within limits.

PINPOINT TEST B : CHECK THE GENERATOR OUTPUT UNDER LOAD	
• NOTE: Before beginning this test, make sure the warning light function is normal without the engine running (see visual inspection table).	
TEST CONDITIONS	**DETAILS/RESULTS/ACTIONS**
B1: CHECK THE FUNCTION OF THE CHARGING SYSTEM WARNING LIGHT	
	1 Start the engine and allow to idle.
	Is the charging system warning light illuminated? **Yes** Check for DTC P0623. REFER to: Electronic Engine Controls (303-14B Electronic Engine Controls - 2.0L Duratorq-TDCi/2.2L Duratorq-TDCi (110kW/150PS) - Puma, Diagnosis and Testing). **No** GO to B2.
B2: CHECK THE CHARGING SYSTEM OUTPUT UNDER LOAD (LOW VOLTAGE)	
	1 Turn the headlights and heated rear window to the **ON** position.
	2 Raise the engine speed to between 2,800 rpm and 3,200 rpm and hold for ten seconds.
	3 Whilst holding the engine rpm in the above range, measure the voltage between the battery positive terminal and GROUND.
	4 Allow the engine to idle.
	Was the average battery voltage less than 12.85 volts? **Yes** GO to B4. **No** GO to B3.
B3: CHECK THE CHARGING SYSTEM OUTPUT UNDER LOAD (HIGH VOLTAGE)	
	1 Raise the engine speed to between 2,800 rpm and 3,200 rpm and hold for ten seconds.
	2 Whilst holding the engine rpm in the above range, measure the voltage between the battery positive terminal and GROUND.
	3 Allow the engine to idle.
	Was the average battery voltage greater than 15.25 volts? **Yes** INSTALL a new generator. REFER to: Generator. CLEAR the DTC. TEST the system for normal operation. **No** Charging system output is within limits.
B4: CHECK THE CHARGING SYSTEM VOLTAGE AT THE GENERATOR CONNECTOR, PIN 01	
WARNING: The following test may involve working in close proximity to hot components. Observe caution when working in this area. Failure to follow this instruction may result in personal injury.	
	1 Turn the headlights and heated rear window to the **OFF** position.

	2 Turn the ignition switch to the **OFF** position.
	3 Disconnect the generator three-way connector.
	4 Connect a voltmeter between the generator, pin 01 and GROUND.
	5 Start the engine.
	6 Turn the headlights and heated rear window to the **ON** position.
	7 Raise the engine speed to between 2,800 rpm and 3,200 rpm and hold for ten seconds.
	8 Whilst holding the engine rpm in the above range, measure the voltage between the generator connector, pin 01 and GROUND.
	9 Allow the engine to idle.
	Was the voltage between 11 and 16 volts? **Yes** Generator is within limits, suspect generator cables. GO to Pinpoint Test G. **No** INSTALL a new generator. REFER to: Generator. CLEAR the DTC. TEST the system for normal operation.

PINPOINT TEST C : P0622: GENERATOR MONITOR CONTROL CIRCUIT FAULT

TEST CONDITIONS	DETAILS/RESULTS/ACTIONS
C1: CHECK THE GENERATOR MONITOR CIRCUIT FOR HIGH RESISTANCE	
	1 Turn the ignition switch to the **OFF** position.
	2 Disconnect the battery negative terminal.
	3 Disconnect the generator three-way connector.
	4 Disconnect the ECM connector, DL01.
	5 Measure the resistance between the three-way connector, pin 01 (W) and DL01, pin 47 (W).
	Is the resistance greater than 5 ohms? **Yes** REPAIR the high resistance circuit. For additional information, refer to the wiring diagrams. CLEAR the DTC. TEST the system for normal operation. **No** GO to C2.
C2: CHECK THE GENERATOR MONITOR CIRCUIT FOR SHORT TO B+	
	1 Reconnect the battery negative terminal.
	2 Measure the voltage between DL01, pin 47 (W) and GROUND.
	Is the voltage greater than 1 volt? **Yes** REPAIR the short circuit. For additional information, refer to the wiring diagrams. CLEAR the DTC. TEST the system for normal operation. **No** GO to C3.
C3: CHECK THE GENERATOR MONITOR CIRCUIT FOR SHORT TO GROUND	
	1 Measure the resistance between DL01, pin 47 (W) and GROUND.
	Is the resistance less than 10,000 ohms? **Yes** REPAIR the short circuit. For additional information, refer to the wiring diagrams. CLEAR the DTC. TEST the system for normal operation. **No** RECHECK DTCs.

PINPOINT TEST D : P1632: GENERATOR COMMUNICATIONS CIRCUIT FAULT

TEST CONDITIONS	DETAILS/RESULTS/ACTIONS
D1: CHECK THE GENERATOR COMMUNICATIONS CIRCUIT FOR HIGH RESISTANCE	
	1 Turn the ignition switch to the **OFF** position.
	2 Disconnect the battery negative terminal.
	3 Disconnect the generator three-way connector.
	4 Disconnect the ECM connector, DL01.
	5 Measure the resistance between the three-way connector, pin 02 (N) and DL01, pin 112 (N).
	Is the resistance greater than 5 ohms? **Yes** REPAIR the high resistance circuit. For additional information, refer to the wiring diagrams. CLEAR the DTC. TEST the system for normal operation. **No** GO to D2.
D2: CHECK THE GENERATOR COMMUNICATIONS CIRCUIT FOR SHORT TO B+	
	1 Reconnect the battery negative terminal.
	2 Measure the voltage between DL01, pin 112 (N) and GROUND.
	Is the voltage greater than 1 volt? **Yes** REPAIR the short circuit. For additional information, refer to the wiring diagrams. CLEAR the DTC. TEST the system for normal operation. **No** GO to D3.
D3: CHECK THE GENERATOR COMMUNICATIONS CIRCUIT FOR SHORT TO GROUND	
	1 Measure the resistance between DL01, pin 112 (N) and GROUND.
	Is the resistance less than 10,000 ohms? **Yes** REPAIR the short circuit. For additional information, refer to the wiring diagrams. CLEAR the DTC. TEST the system for normal operation. **No** RECHECK DTCs.

PINPOINT TEST E : GENERATOR NOISY

TEST CONDITIONS	DETAILS/RESULTS/ACTIONS
E1: CHECK THE GENERATOR FOR SECURITY	
	1 Inspect the generator fixings.
	Is the generator secure? **Yes** GO to E2. **No** SECURE the generator. REFER to: Generator. TEST the system for normal operation.
E2: CHECK THE ACCESSORY DRIVE BELT	
	1 Remove and inspect the accessory drive belt. For additional information REFER to: Accessory Drive Belt - 2.0L Duratorq-TDCi/2.2L Duratorq-TDCi (110kW/150PS) - Puma (303-05 Accessory Drive, Removal and Installation).
	Is the accessory drive belt in good condition? **Yes** GO to E3. **No** INSTALL a new accessory drive belt. REFER to: Accessory Drive Belt - 2.0L Duratorq-TDCi/2.2L Duratorq-TDCi (110kW/150PS) - Puma (303-05 Accessory Drive, Removal and Installation). TEST the system for normal operation.
E3: CHECK THE ACCESSORY DRIVE BELT TENSIONER	
	1 Remove and inspect the accessory drive belt tensioner. REFER to: Accessory Drive Belt - 2.0L Duratorq-TDCi/2.2L Duratorq-TDCi (110kW/150PS) - Puma (303-05 Accessory Drive, Removal and Installation).
	Is the accessory drive belt tensioner in good condition? **Yes** GO to E4. **No** INSTALL a new accessory drive belt tensioner. REFER to: Accessory Drive Belt Tensioner - 2.0L Duratorq-TDCi/2.2L Duratorq-TDCi (110kW/150PS) - Puma (303-05 Accessory Drive, Removal and Installation). TEST the system for normal operation.
E4: CHECK THE GENERATOR FOR MECHANICAL NOISE	
	1 Rotate the generator pulley by hand.
	Does the generator rotor shaft rotate smoothly and quietly? **Yes** GO to E5. **No** INSTALL a new generator. REFER to: Generator. TEST the system for normal operation.
E5: CHECK THE ACCESSORY DRIVE BELT IDLER PULLEYS	
	1 Rotate the accessory drive belt idler pulleys by hand.
	Do the accessory drive belt idler pulleys rotate smoothly and quietly? **Yes** GO to E6. **No** INSTALL new accessory drive belt pulleys as necessary. REFER to: Accessory Drive Belt Tensioner - 2.0L Duratorq-TDCi/2.2L Duratorq-TDCi (110kW/150PS) - Puma (303-05 Accessory Drive, Removal and Installation). TEST the system for normal operation.
E6: CHECK THE GENERATOR FOR ELECTRICAL NOISE	
	1 Install the accessory drive belt. REFER to: Accessory Drive Belt - 2.0L Duratorq-TDCi/2.2L Duratorq-TDCi (110kW/150PS) - Puma (303-05 Accessory Drive, Removal and Installation).
	2 Start and run the engine at 1500 rpm. Apply a high electrical load to the battery.
	Is the noise only heard with the high electrical load applied? **Yes** GO to E7. **No** CHECK the air conditioning compressor. For additional information REFER to: Air Conditioning (A/C) Compressor - 2.0L NA V6 - AJV6/2.5L NA V6 - AJV6/3.0L NA V6 - AJ27 (412-03 Air Conditioning, Removal and Installation). CHECK the power steering pump. For additional information REFER to: Power Steering Pump - 2.0L NA V6 - AJV6/2.5L NA V6 - AJV6/3.0L NA V6 - AJ27 (211-02 Power Steering, Removal and Installation). TEST the system for normal operation.
E7: ELIMINATE THE GENERATOR AS THE CAUSE OF ELECTRICAL NOISE	
	1 Remove fuse 15 from the primary junction fuse box.
	2 Start and run the engine at 1500 rpm.
	Is the noise still present? **Yes** CHECK the air conditioning compressor. For additional information REFER to: Air Conditioning (A/C) Compressor - 2.0L NA V6 - AJV6/2.5L NA V6 - AJV6/3.0L NA V6 - AJ27 (412-03 Air Conditioning, Removal and Installation). CHECK the power steering pump. For additional information REFER to: Power Steering Pump - 2.0L NA V6 - AJV6/2.5L NA V6 - AJV6/3.0L NA V6 - AJ27 (211-02 Power Steering, Removal and Installation). TEST the system for normal operation. **No** INSTALL a new generator. REFER to: Generator. TEST the system for normal operation.

PINPOINT TEST F : RADIO INTERFERENCE

TEST CONDITIONS	DETAILS/RESULTS/ACTIONS
F1: CHECK IF THE GENERATOR IS THE CAUSE OF THE RADIO INTERFERENCE	
	1 Start and run the engine at 1500 rpm.
	2 Turn the radio to the **ON** position, and select the affected station.
	Is the radio interference present? **Yes** GO to F3. **No** GO to F2.
F2: CHECK IF THE GENERATOR IS THE CAUSE OF THE RADIO INTERFERENCE WITH A HIGH ELECTRICAL LOAD APPLIED TO THE BATTERY	
	1 Start and run the engine at 1500 rpm.
	2 Apply a high electrical load to the battery.
	3 Turn the radio to the **ON** position, and select the affected station.
	Is the radio interference present? **Yes** GO to F3. **No** DIAGNOSE the entertainment system. For additional information REFER to: Audio System (415-00 Information and Entertainment System - General Information, Diagnosis and Testing).
F3: ELIMINATE THE GENERATOR AS THE CAUSE OF RADIO INTERFERENCE	
	1 Remove fuse 33 from the primary junction fuse box.
	2 Start and run the engine at 1500 rpm.
	3 Turn the radio to the **ON** position, and select the affected station.
	Is the radio interference present? **Yes** DIAGNOSE the entertainment system. For additional information REFER to: Audio System (415-00 Information and Entertainment System - General Information, Diagnosis and Testing). **No** CLEAN and tighten all mounting points, positive and negative cable connections (including the bonnet, boot and engine GROUND straps). INSTALL fuse 15 from the primary junction fuse box. TEST the system for normal operation. If interference is still present, INSTALL a new generator. REFER to: Generator.

PINPOINT TEST G : CHECK THE VOLT DROP ACROSS THE BATTERY CABLES	
TEST CONDITIONS	**DETAILS/RESULTS/ACTIONS**
G1: CHECK THE VOLT DROP BETWEEN THE BATTERY AND THE GENERATOR	
	1 Measure the voltage between the battery terminals.
	2 With the negative probe still on the battery negative terminal, connect the positive probe to the generator output terminal.
	3 Compare the voltages.
	Is the voltage difference greater than 1 volt? **Yes** INSTALL a new battery cable. REFER to: Battery Cables - 2.0L Duratorq-TDCi/2.2L Duratorq-TDCi (110kW/150PS) - Puma (414-01 Battery, Mounting and Cables, Removal and Installation). **No** CHECK for DTCs. Check the generator output.

Published: 11-May-2011

Battery and Charging System - General Information - Battery Charging

General Procedures

1. For additional information, refer to the battery care manual (BCM).

Published: 11-May-2011

Battery, Mounting and Cables -

General Specifications

Item	Specification
Battery Capacity Vehicles With Petrol Engines	80 Ah
Battery Capacity Vehicles With Diesel Engines	80 Ah
Battery Cold Cranking Vehicles With Petrol Engines	680 Amps
Battery Cold Cranking Vehicles With Diesel Engines	640 Amps

Torque Specifications

Description	Nm	lb-ft	lb-in
Battery to starter motor solenoid cable retaining nut - vehicles with 2.0L, 2.5L or 3.0L engines	12	9	-
Battery ground cable to body retaining bolt	25	18	-
Battery ground cable to transmision retaining bolt	25	18	-
Battery ground cable to starter motor retaining bolt - vehicles with manual transmission and 2.0L, 2.5L or 3.0L engines	35	26	-
Generator positive cable retaining nut - vehicles with 2.0L diesel engine	8	-	71

Battery, Mounting and Cables - Battery and Cables

Description and Operation

Vehicles fitted with 2.0L, 2.5L and 3.0L engines

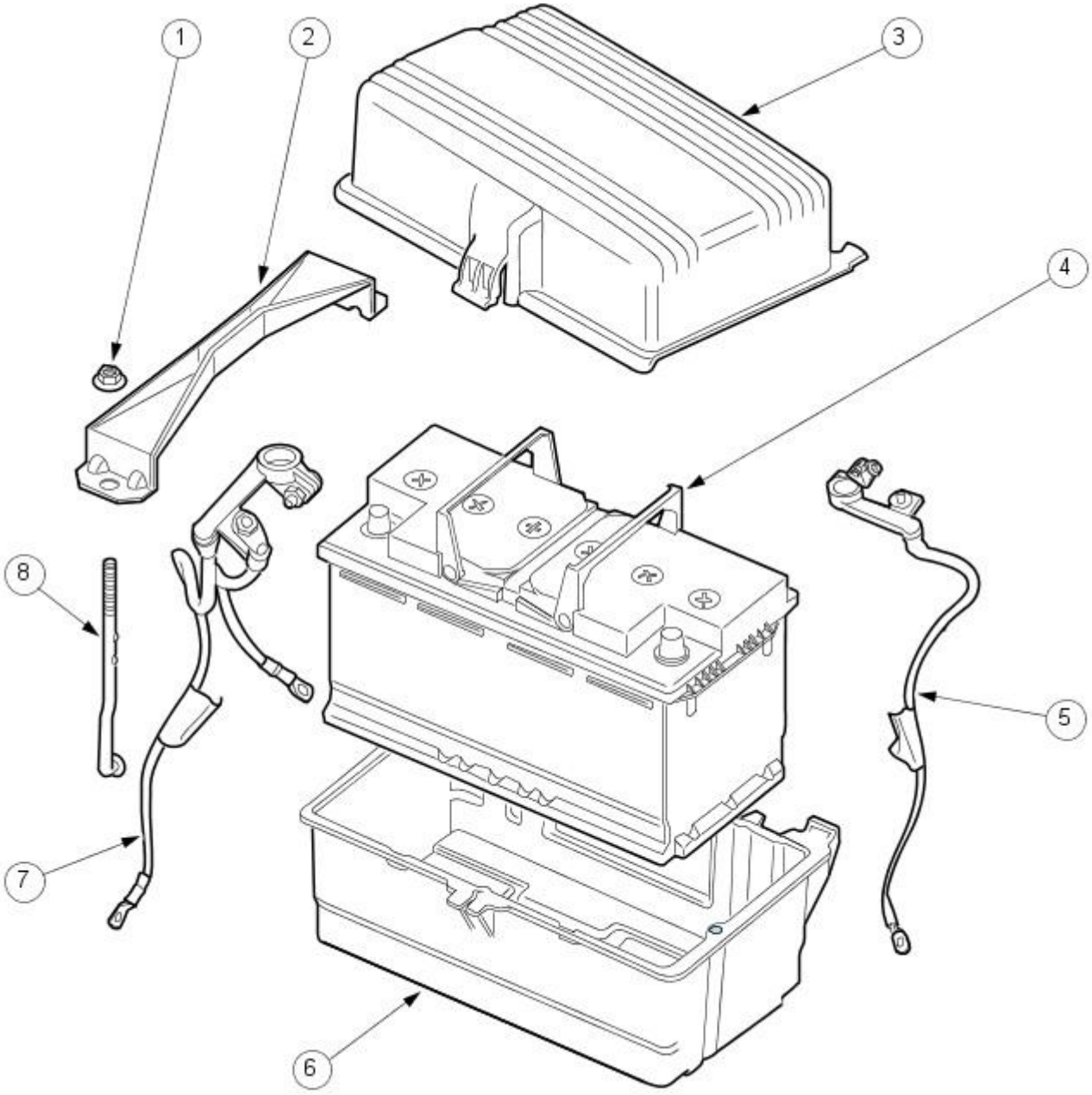

VUJ0003823

Item	Part Number	Description
1	—	Battery clamp retaining nut
2	—	Battery clamp
3	—	Battery cover
4	—	Battery
5	—	Battery to starter motor solenoid cable
6	—	Battery tray
7	—	Battery ground cable
8	—	Battery clamp retaining bolt

Vehicles fitted with 2.0L diesel engines

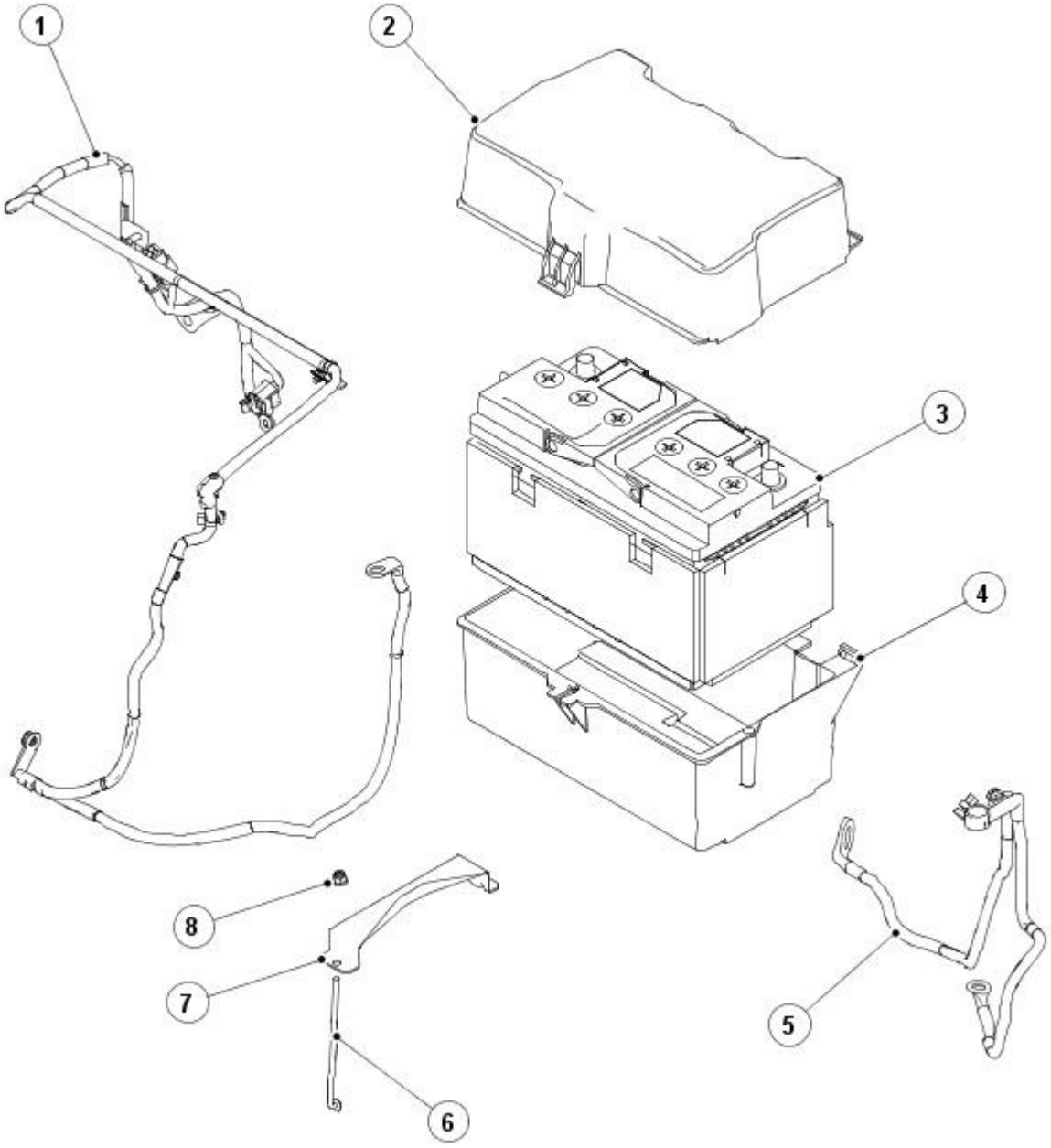

E45901

Item	Part Number	Description
1	—	Battery to generator and starter motor positive cable
2	—	Battery cover
3	—	Battery
4	—	Battery tray
5	—	Battery ground cable
6	—	Battery clamp retaining bolt
7	—	Battery clamp
8	—	Battery clamp retaining nut

The battery fitted is a 12 volts (DC) 80 ampere hour.

The battery ground cable consists of two heavy duty cables which are connected between the battery ground distributor pole and both the vehicle body and transmission.

Published: 11-May-2011

Battery, Mounting and Cables - Battery

Diagnosis and Testing

For additional information, refer to the battery care manual.

Battery, Mounting and Cables - Battery Connect

General Procedures

• WARNINGS:

Batteries normally produce explosive gases which may cause personal injury, therefore do not allow lighted substances to come near the battery. When charging or working near the battery always shield your face and protect your eyes. Always provide adequate ventilation. Failure to follow these instructions may result in personal injury.

Batteries contain sulphuric acid, avoid contact with skin, eyes or clothing. Shield your face and protect your eyes when working near the battery to guard against possible splashing of the acid solution. In case of acid contact with the skin or eyes, flush immediately for a minimum of 15 minutes and seek prompt medical attention. If swallowed, call a physician immediately. Failure to follow these instructions may result in personal injury.

CAUTION: Make sure all electrical systems are OFF before connecting the battery ground cable. Failure to follow this instruction may result in damage to the vehicles electrical system.

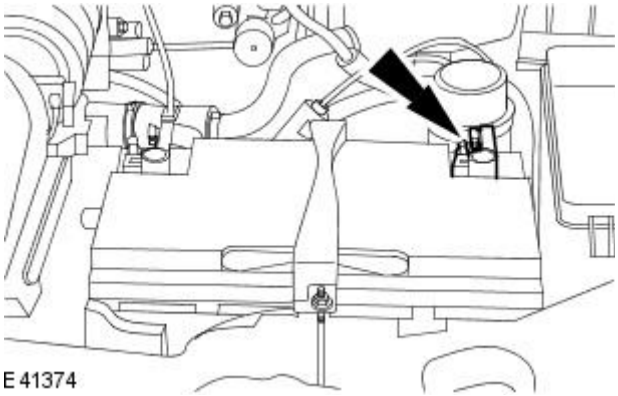

1. NOTE: Petrol engine shown, diesel engine similar.

Connect the battery ground cable.

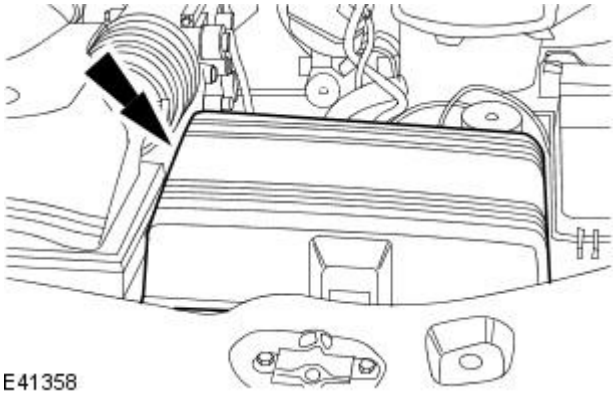

2. NOTE: Petrol engine shown, diesel engine similar.

Install the battery cover.

3. Enter the audio unit keycode and preset radio frequencies.

4. Reset the clock to the correct time.

5. NOTE: When the battery has been disconnected and connected the settings for the windows one touch facility and the anti-trap facility will have been erased.

Initialize the door window motors.
For additional information, refer to: Door Window Motor Initialization (501-11 Glass, Frames and Mechanisms, General Procedures).

6. NOTE: When the battery has been disconnected and connected, the stored idle and drive values contained within the engine control module (ECM) will have been erased. The ECM must relearn the idle and drive values.

Relearn the ECM fueling adaptations.
For additional information, refer to: Evaporative Emissions - 2.0L NA V6 - AJV6 (303-13 Evaporative Emissions, Diagnosis and Testing) / Evaporative Emissions - 2.5L NA V6 - AJV6/3.0L NA V6 - AJ27 (303-13 Evaporative Emissions, Diagnosis and Testing).

Battery, Mounting and Cables - Battery Disconnect and Connect

General Procedures

Disconnect

• WARNINGS:

Batteries normally produce explosive gases which may cause personal injury, therefore do not allow lighted substances to come near the battery. When charging or working near the battery always shield your face and protect your eyes. Always provide adequate ventilation. Failure to follow these instructions may result in personal injury.

Batteries contain sulphuric acid, avoid contact with skin, eyes or clothing. Shield your face and protect your eyes when working near the battery to guard against possible splashing of the acid solution. In case of acid contact with the skin or eyes, flush immediately for a minimum of 15 minutes and seek prompt medical attention. If swallowed, call a physician immediately. Failure to follow these instructions may result in personal injury.

Audio unit key code saving devices must not be used when working on supplemental restraint or fuel systems. When using these devices the vehicle electrical system is still live but with a reduced current flow. Failure to follow this instruction may result in personal injury.

CAUTION: Make sure the engine is not running before disconnecting the battery ground cable. Failure to follow this instruction may result in damage to the vehicles electrical system.

• NOTE: Before disconnecting the battery make sure that no data is required from the engine control module (ECM), as battery cable disconnection will erase any fault codes and idle/drive values held in the keep alive memory (KAM). It is not necessary to disconnect or remove electronic control modules.

• NOTE: This procedure should be used to disconnect the battery while carrying out repairs that refer to the battery being disconnected.

1. Obtain and record the audio unit keycode and preset radio frequencies.

2. NOTE: Petrol engine shown, diesel engine similar.

Remove the battery cover.

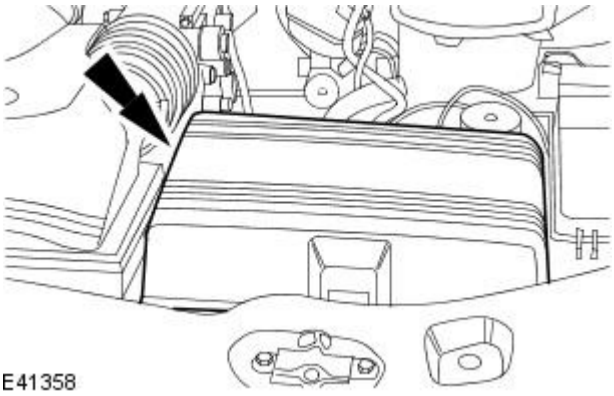

3. NOTE: Petrol engine shown, diesel engine similar.

Disconnect the battery ground cable.

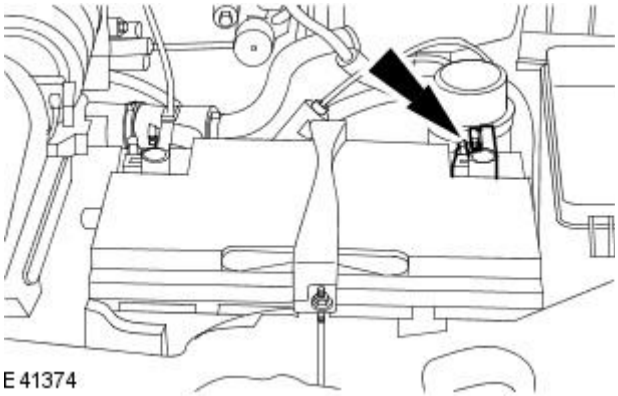

Battery, Mounting and Cables - Battery

Removal and Installation

Removal

1. Disconnect the battery ground cable.
   For additional information, refer to: Battery Disconnect and Connect (414-01 Battery, Mounting and Cables, General Procedures).

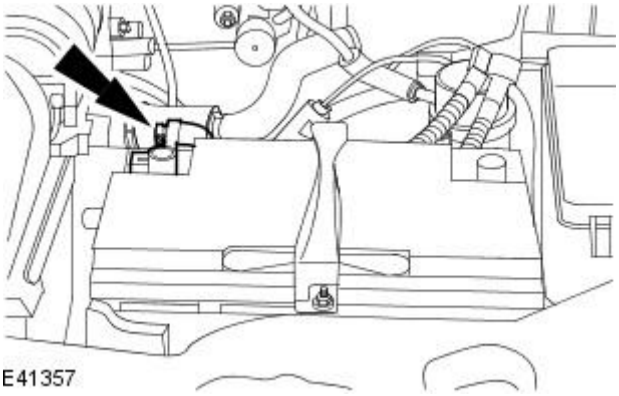

2. NOTE: Petrol engine shown, diesel engine similar.

   Disconnect the battery positive cable.

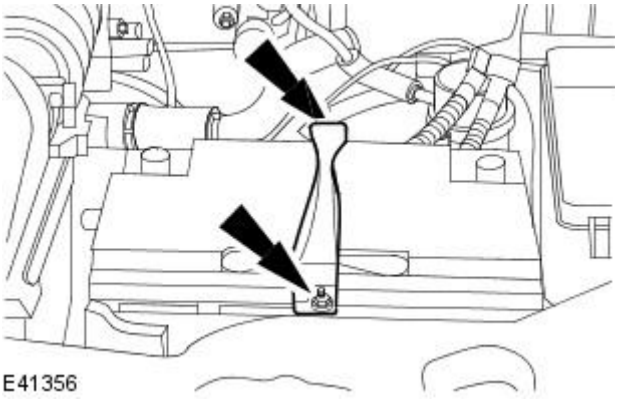

3. NOTE: Petrol engine shown, diesel engine similar.

   Remove the battery clamp.

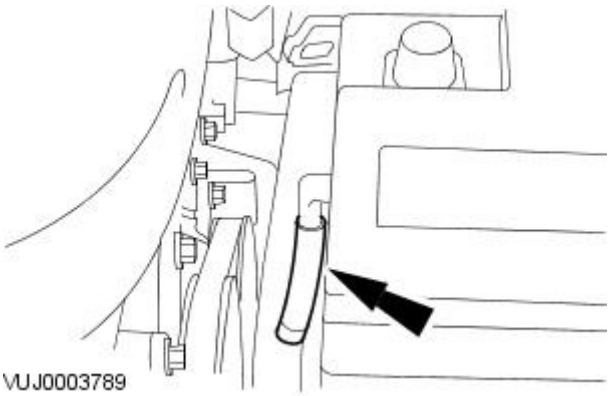

4. NOTE: Petrol engine shown, diesel engine similar.

   Disconnect the battery vent tube.

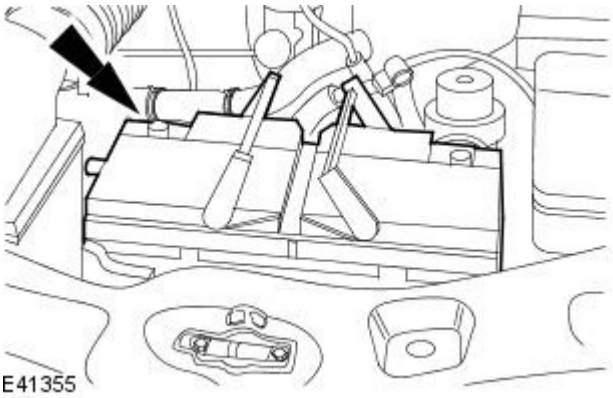

5. NOTE: Petrol engine shown, diesel engine similar.

   Remove the battery.

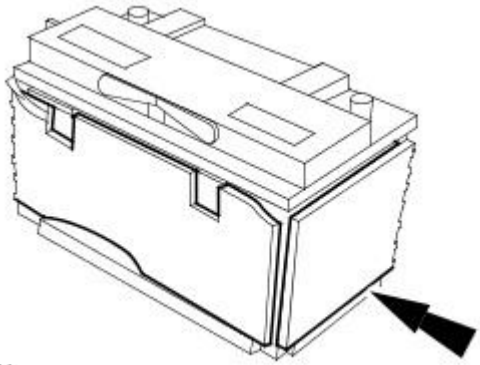

E41354

6. NOTE: Petrol engine shown, diesel engine similar.

Remove the battery heat shield.

Installation

1. To install, reverse the removal procedure.

Battery, Mounting and Cables - Battery Cables2.0L NA V6 - AJV6 / 2.5L NA V6 - AJV6 / 3.0L NA V6 - AJ27

Removal and Installation

Removal

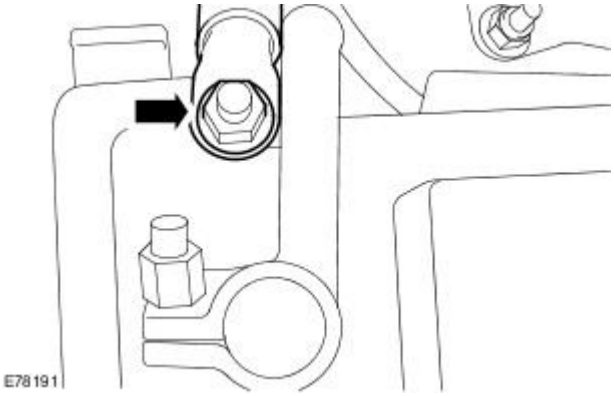

1. Disconnect the battery.
   For additional information, refer to: Battery Disconnect and Connect (414-01 Battery, Mounting and Cables, General Procedures).
2. Detach the battery junction box positive cable.
   - Remove the retaining nut.

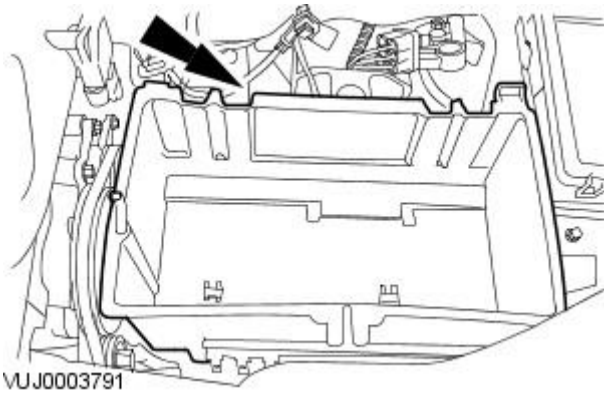

3. Remove the battery.
   For additional information, refer to: Battery (414-01 Battery, Mounting and Cables, Removal and Installation).
4. Remove the battery tray.

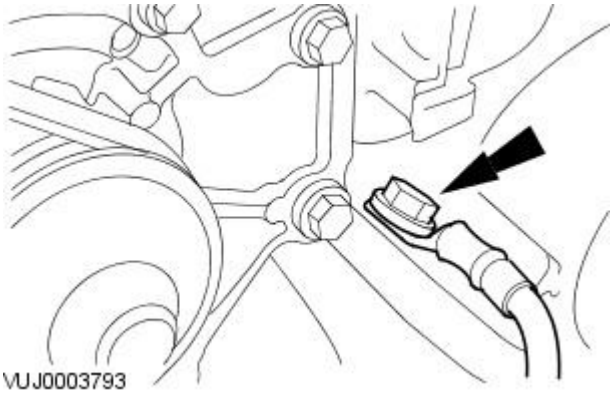

5. Detach the battery ground cable.
   - Remove the retaining bolt.

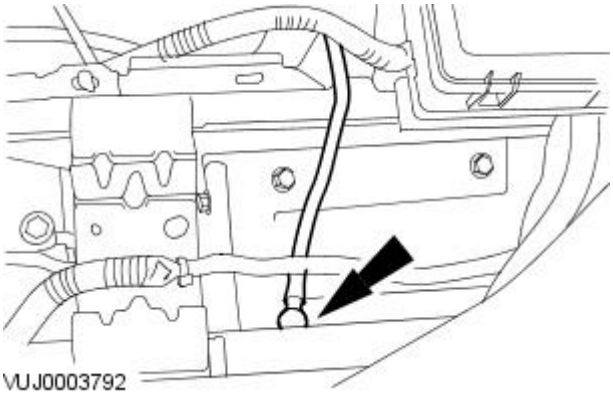

6. Remove the battery ground cable.
   - Remove the retaining bolt.

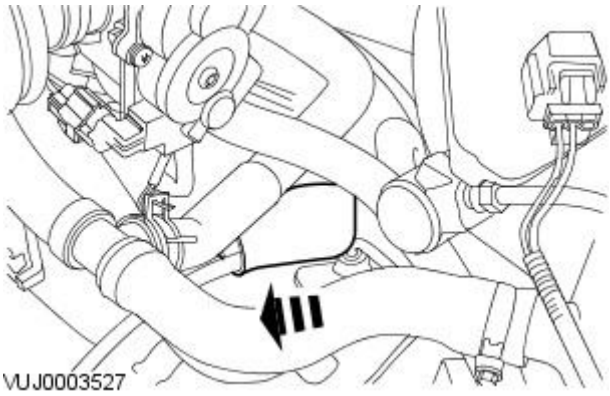

7. Detach the battery to starter motor solenoid cable cover.

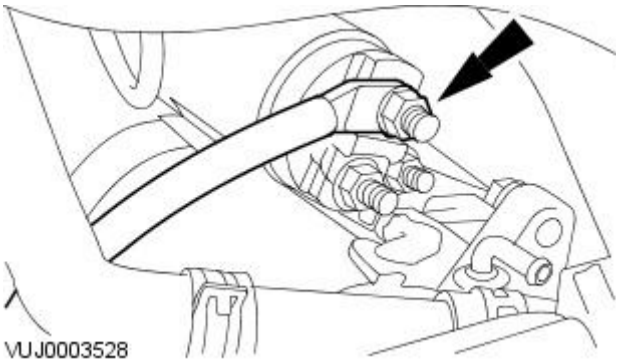

8. Remove the battery to starter motor solenoid cable.

- Remove the retaining nut.

9. Remove the air cleaner assembly.
For additional information, refer to: Air Cleaner (303-12A Intake Air Distribution and Filtering - 2.0L NA V6 - AJV6/2.5L NA V6 - AJV6/3.0L NA V6 - AJ27, Removal and Installation).

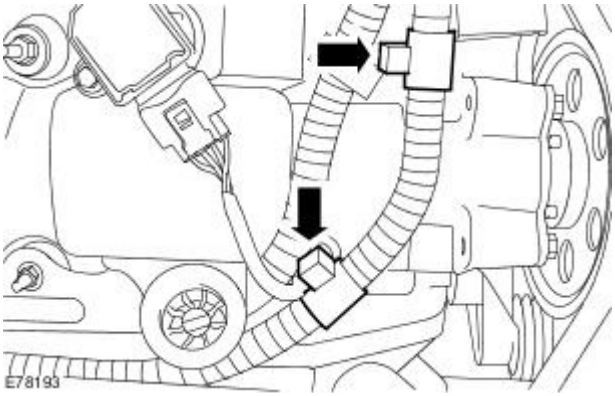

10. Detach the wiring harness.

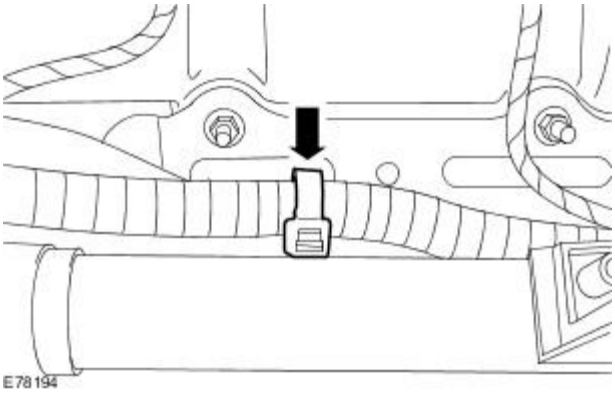

11. Detach the wiring harness.

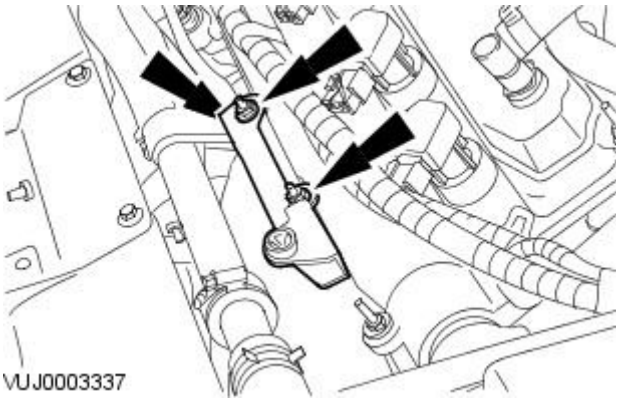

12. Remove the air filter retaining bracket.

- Remove the retaining nuts.

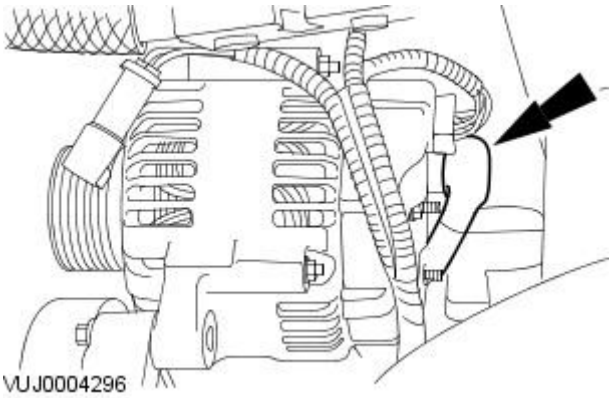

13. Detach the generator battery positive cable protective cover.

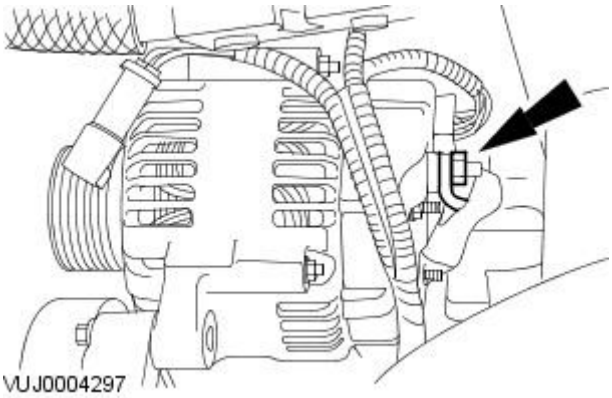

14. Remove the battery positive cable.

- Detach the generator battery positive cable electrical connector.
- Remove the retaining nut.

Installation

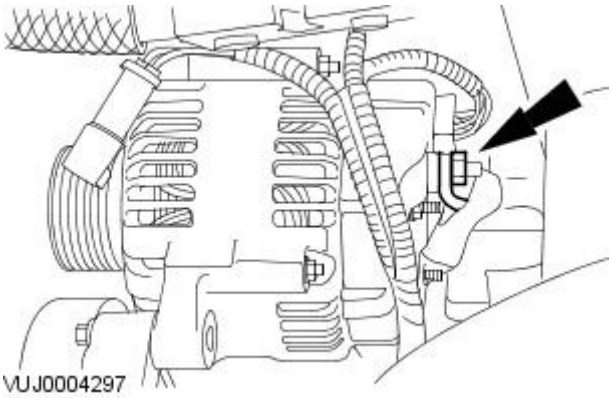

1. To install, reverse the removal procedure.

- Tighten to 12 Nm.

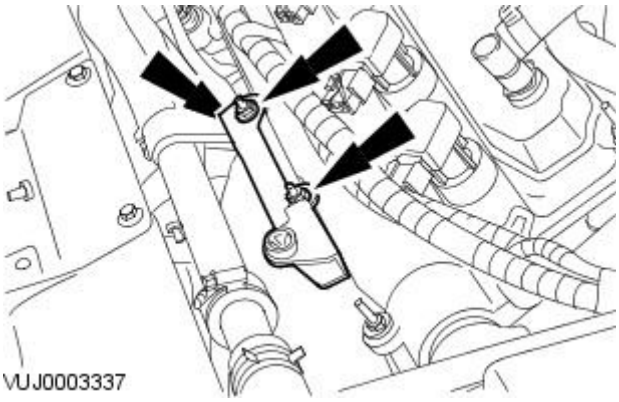

2. Tighten to 6 Nm.

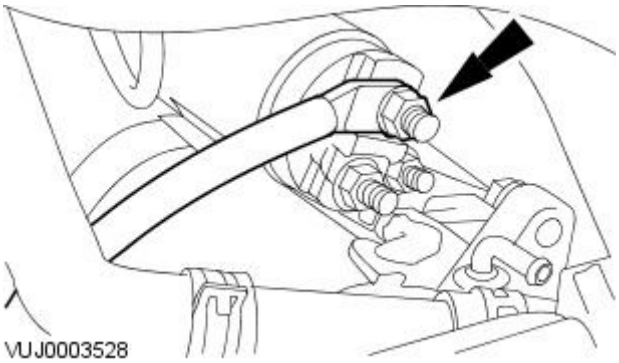

3. Tighten to 12 Nm.

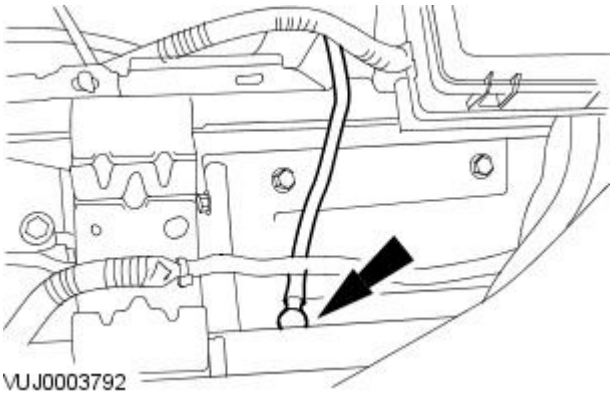

4. Tighten to 25 Nm.

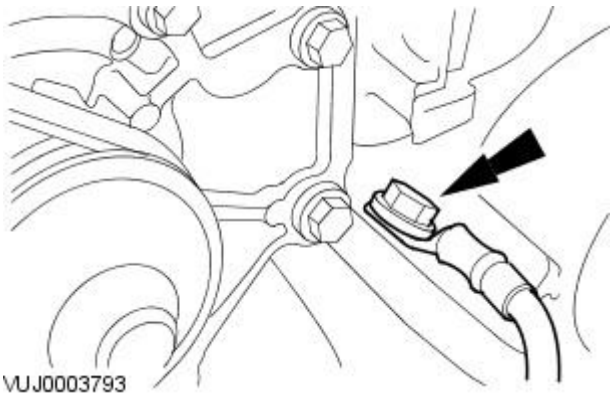

5. Tighten to 25 Nm.

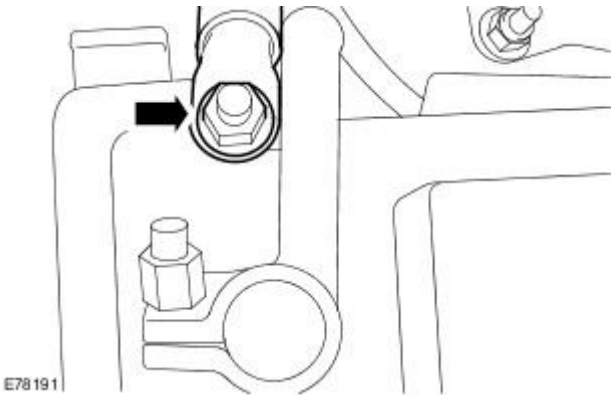

6. Tighten to 4 Nm.

Battery, Mounting and Cables - Battery Cables2.0L Duratorq-TDCi / 2.2L Duratorq-TDCi (110kW / 150PS) - Puma

Removal and Installation

Removal

1. Remove the battery tray.
   For additional information, refer to: Battery Tray (414-01 Battery, Mounting and Cables, Removal and Installation).
2. Remove the air cleaner.
   For additional information, refer to: Air Cleaner (303-12B Intake Air Distribution and Filtering - 2.0L Duratorq-TDCi/2.2L Duratorq-TDCi (110kW/150PS) - Puma, Removal and Installation).
3. Detach the generator and starter motor positive cable away from the battery positive terminal.

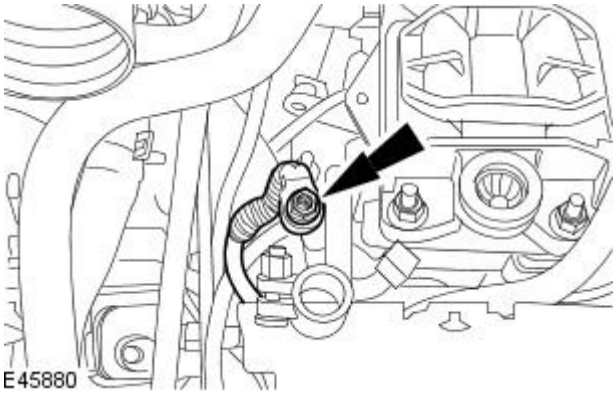

4. Detach the generator and starter motor positive cable from the battery bracket and the wiring harness.

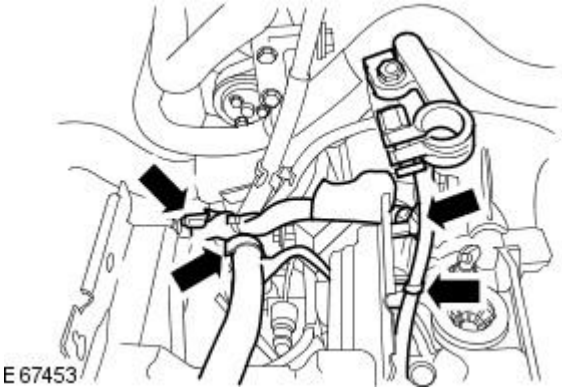

5. Detach the generator and starter motor positive cable from the starter motor wiring harness support bracket.

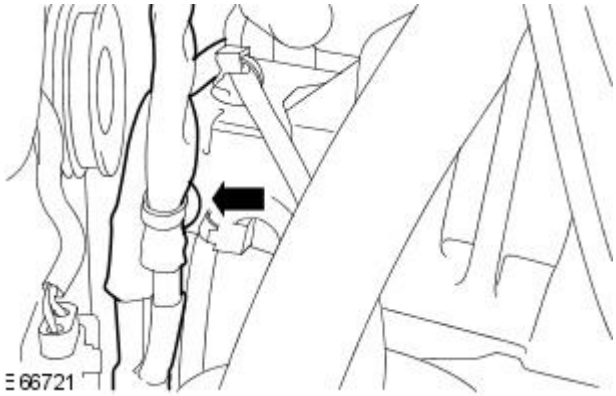

6. Reposition the starter motor solenoid protective cover.

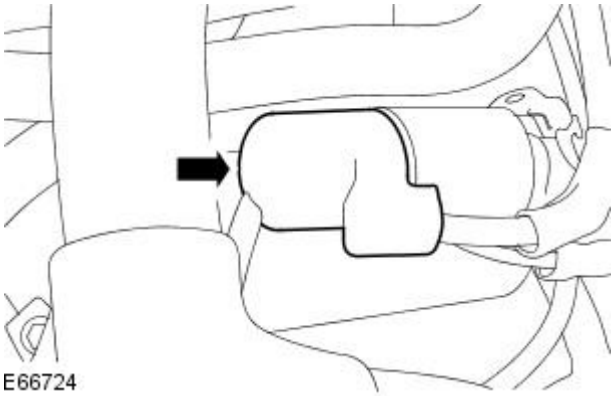

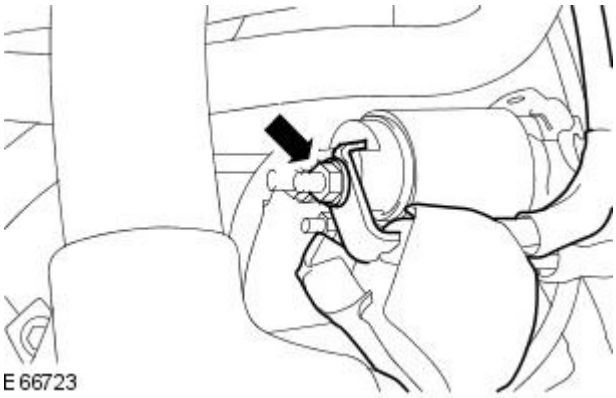

7. Detach the generator and starter motor positive cable from the starter motor.

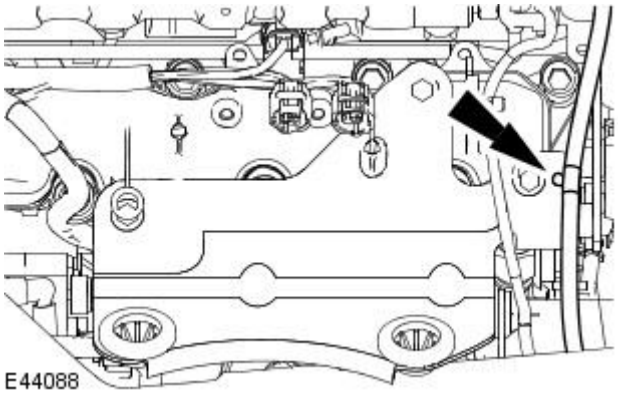

8. Detach the generator and starter motor positive cable from the air cleaner mounting bracket.

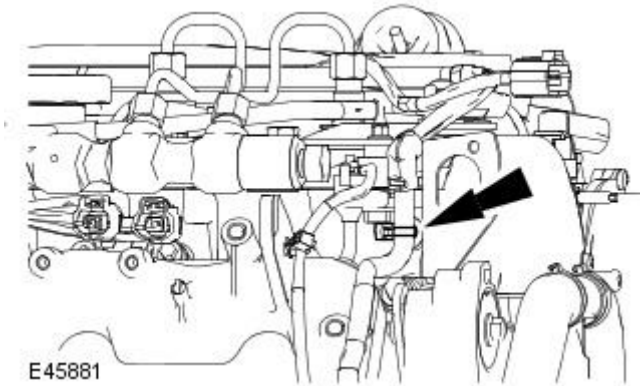

9. Detach the generator and starter motor positive cable from the power steering pump belt cover mounting bracket.

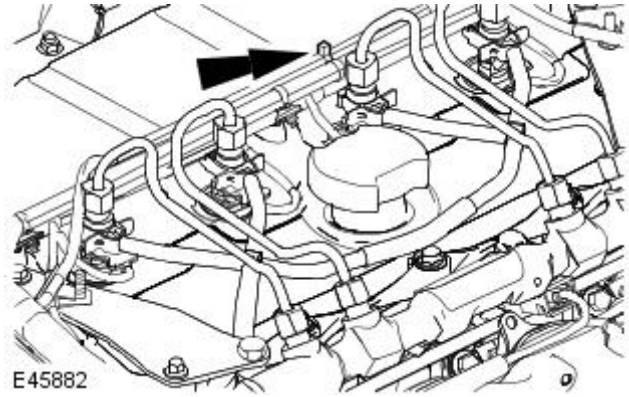

10. Remove the retaining strap.

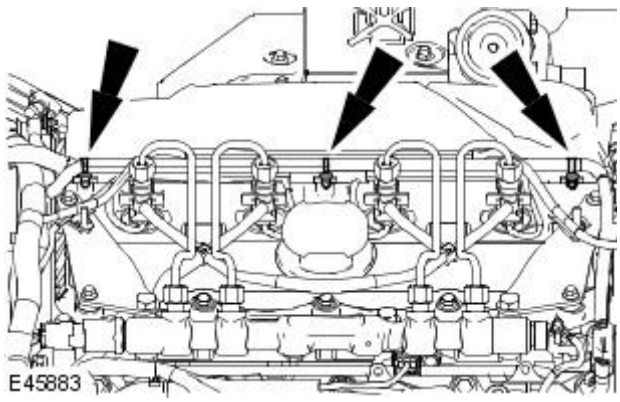

11. Detach the generator and starter motor positive cable from the engine harness.

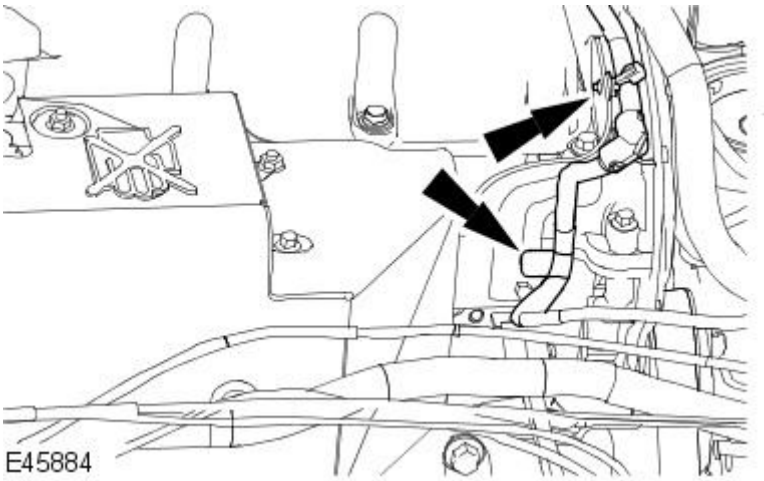

12. Detach the generator and starter motor positive cable from the engine cover mounting bracket.

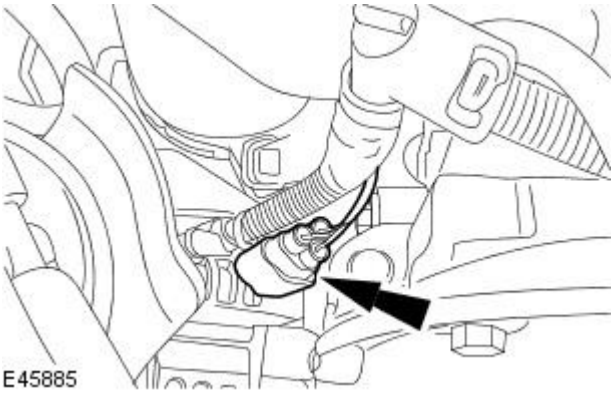

13. Disconnect the generator wiring harness electrical connector.

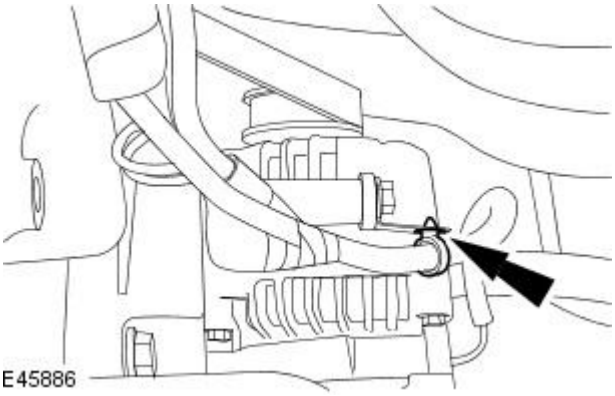

14. Detach the generator and starter motor positive cable from the generator cable mounting bracket.

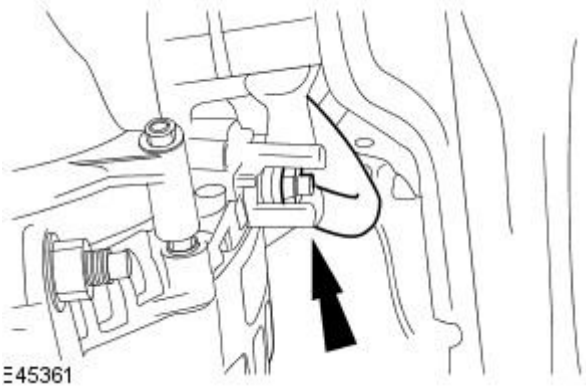

15. Detach the generator positive cable.

16. Disconnect the generator electrical connector.

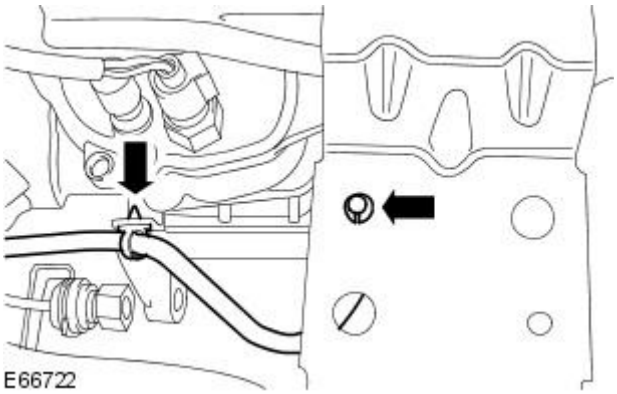

17. Detach the battery ground cable from the transmission retaining bracket and battery bracket.

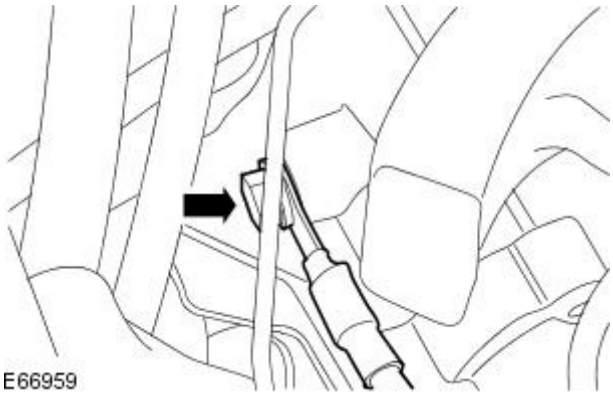

18. Detach the battery ground cable from the transmission.

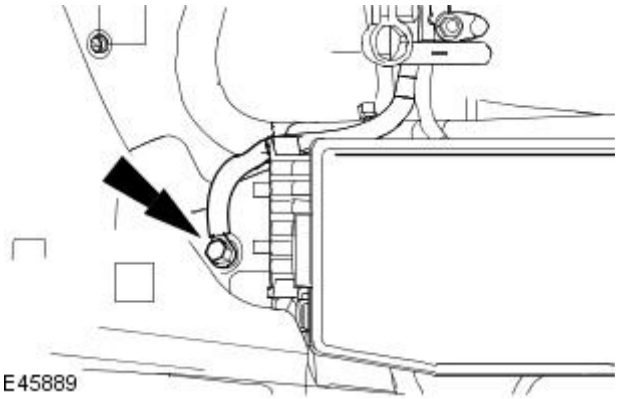

19. Remove the battery ground cable.

Installation

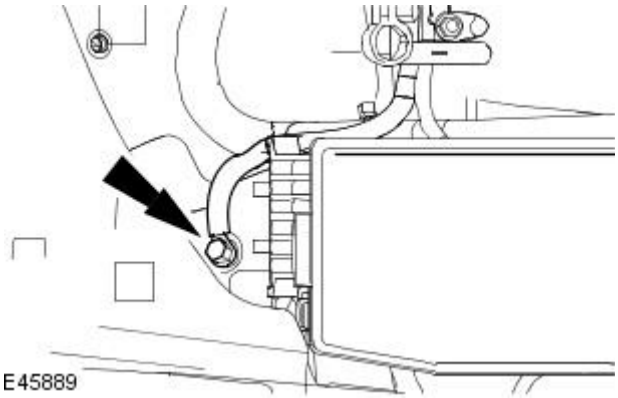

1. To install, reverse the removal procedure.

- Tighten to 25 Nm.

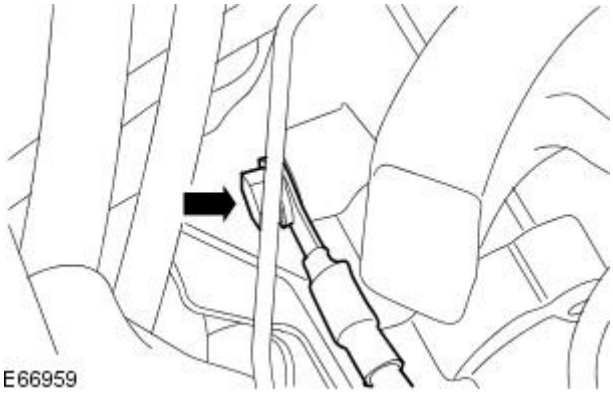

2. Tighten to 25 Nm.

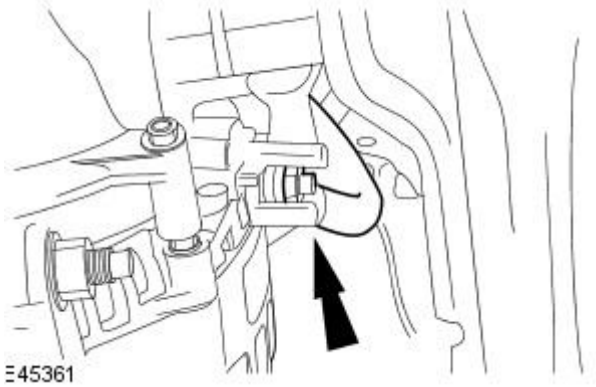

3. Tighten to 8 Nm.

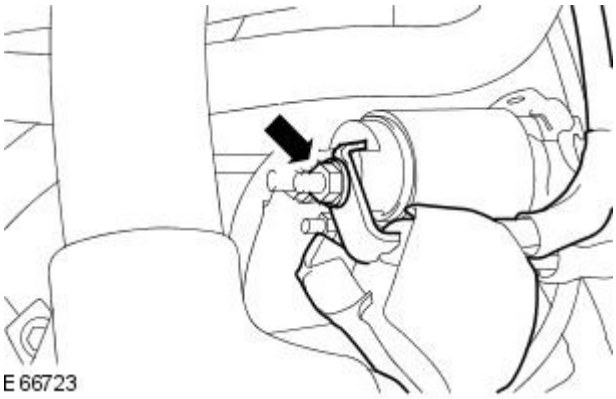

4. Tighten to 8 Nm.

Battery, Mounting and Cables - Battery Tray

Removal and Installation

Removal

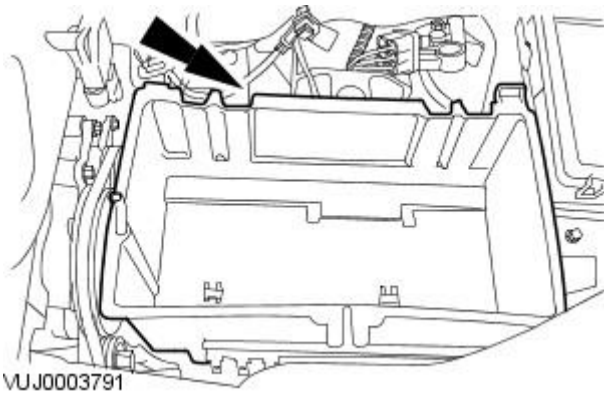

1. Remove the battery.
   For additional information, refer to: Battery (414-01 Battery, Mounting and Cables, Removal and Installation).
2. NOTE: Petrol engine shown, diesel engine similar.

   Remove the battery tray.

Installation

1. To install, reverse the removal procedure.

Published: 11-May-2011

Generator and Regulator -

Torque Specifications

Description	Nm	lb-ft	lb-in
Generator upper retaining bolt	47	35	-
Generator lower retaining bolts - vehicles with 2.0L, 2.5L or 3.0L engine	25	18	-
Generator lower mounting studs - vehicles with 2.0L diesel engine	15	11	-
Generator lower retaining nuts - vehicles with 2.0L diesel engine	47	35	-
Generator battery positive cable retaining nut	12	9	-
Generator cooling duct retaining nuts - vehicles with 2.0L diesel engine	4	-	35

Generator and Regulator - Generator

Description and Operation

Charging system components

Vehicles with 2.0L, 2.5L or 3.0L engine

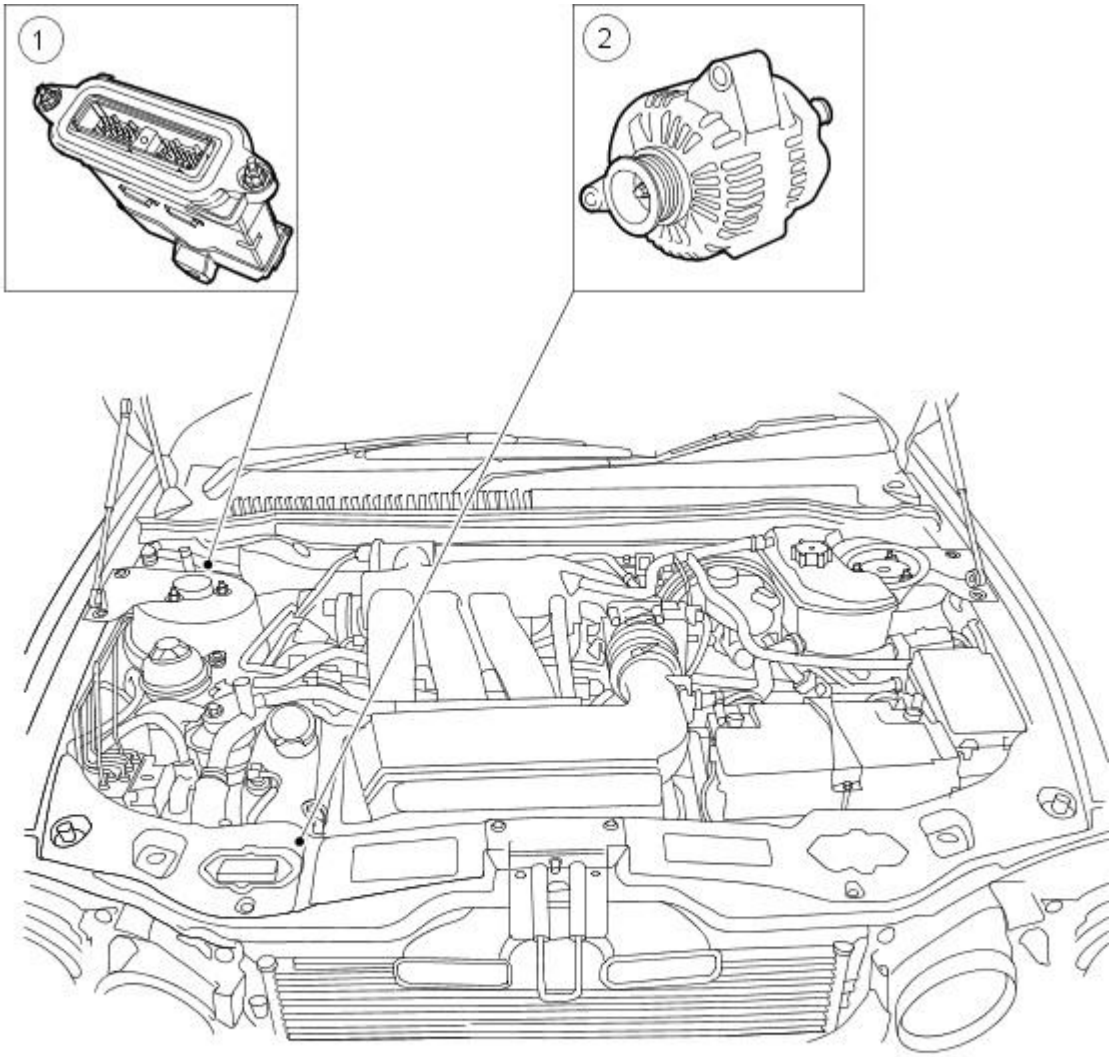

VUJ0004295

Item	Part Number	Description
1	—	Engine Control Module (ECM)
2	—	Generator

Vehicles with 2.0L diesel engine

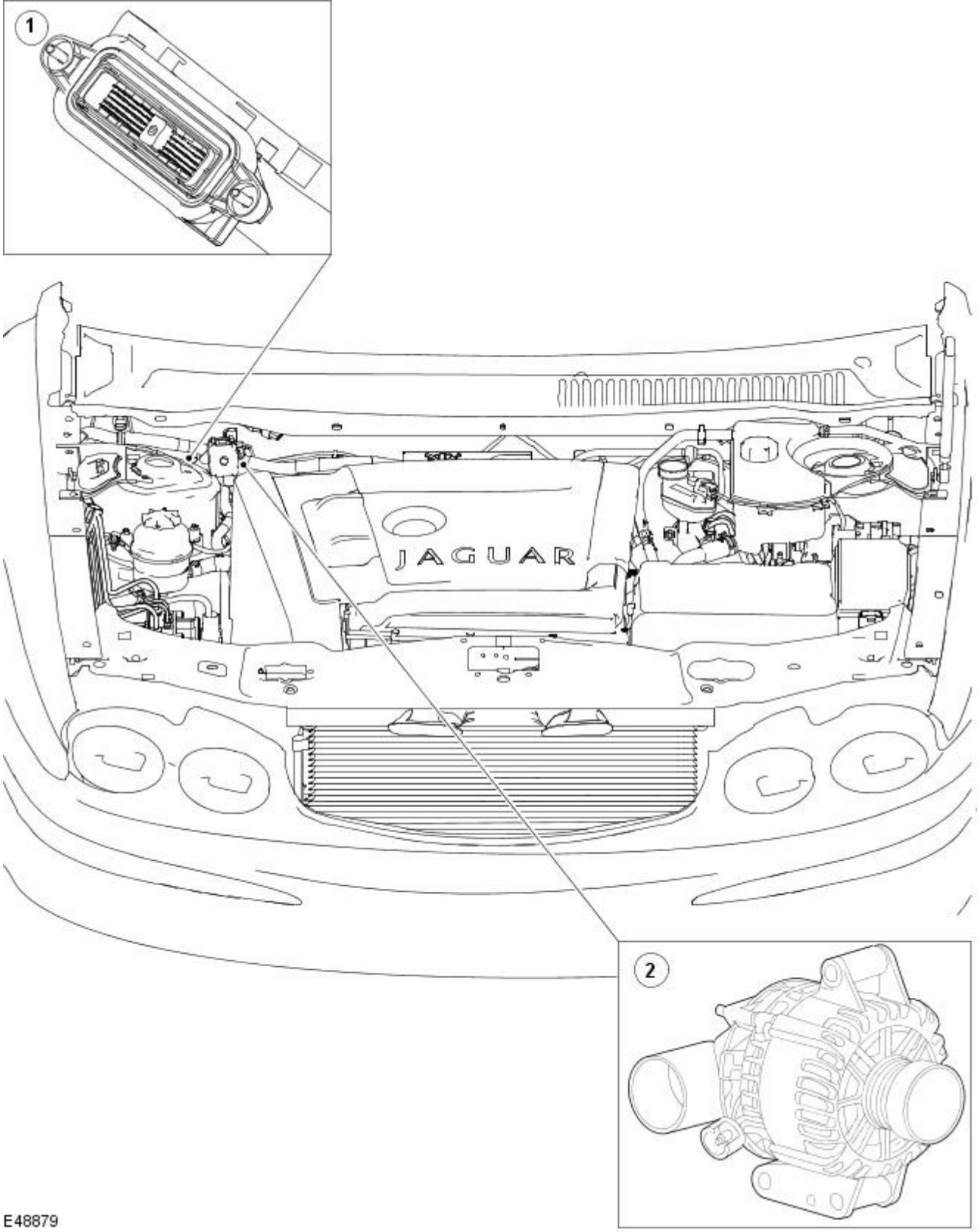

E48879

Item	Part Number	Description
1	—	Engine Control Module (ECM)
2	—	Generator

• NOTE: Generators should be serviced as a unit and not dismantled for overhaul.

Published: 11-May-2011

Generator and Regulator - Generator

Diagnosis and Testing

2.0L/2.5L/3.0L Vehicles

REFER to: Charging System - 2.0L NA V6 - AJV6/2.5L NA V6 - AJV6/3.0L NA V6 - AJ27 (414-00 Battery and Charging System - General Information, Diagnosis and Testing).

2.0L Diesel Vehicle

REFER to: Charging System - 2.0L Duratorq-TDCi/2.2L Duratorq-TDCi (110kW/150PS) - Puma (414-00 Battery and Charging System - General Information, Diagnosis and Testing).

Generator and Regulator - Generator2.0L NA V6 - AJV6 / 2.5L NA V6 - AJV6 / 3.0L NA V6 - AJ27

Removal and Installation

Removal

1. Disconnect the battery ground cable. For additional information, refer to Section 414-01 Battery, Mounting and Cables.
2. Remove air conditioning compressor. For additional information, refer to Section 412-03 Air Conditioning.
3. Detach the generator battery positive cable protective cover.

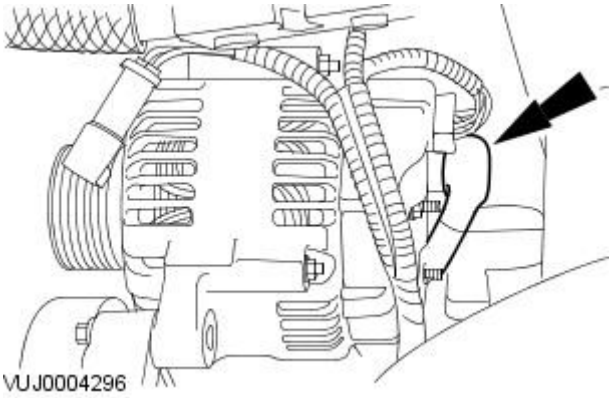

4. Disconnect the generator battery positive cable electrical connector.

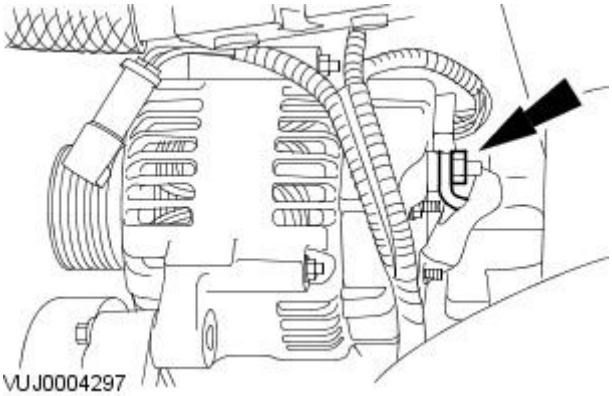

5. Disconnect the generator electrical connector.

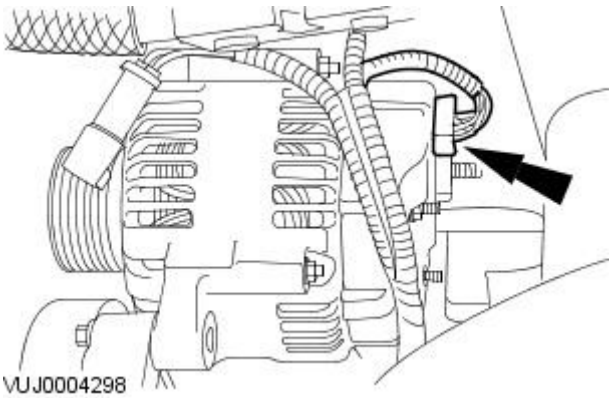

6. Remove the generator lower retaining bolt.

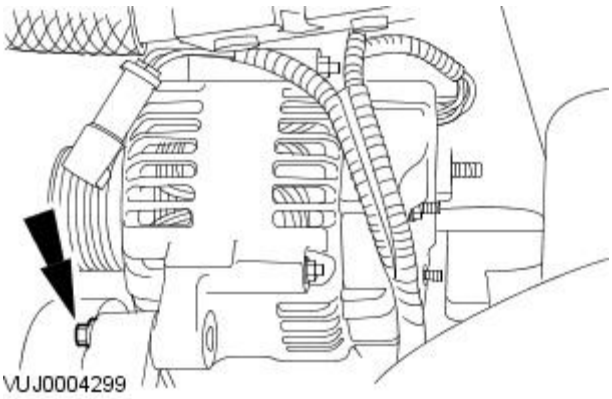

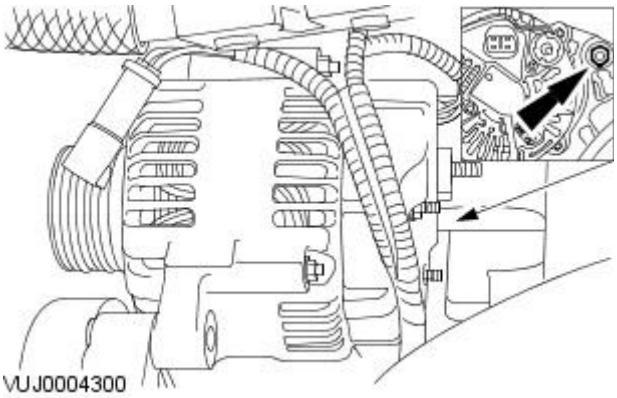

7. Remove the generator.

- Remove the generator upper retaining bolts.

Installation

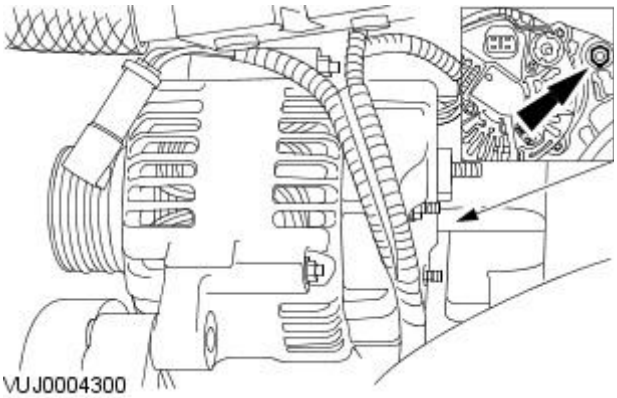

1. To install, reverse the removal procedure.

- Tighten to 47 Nm.

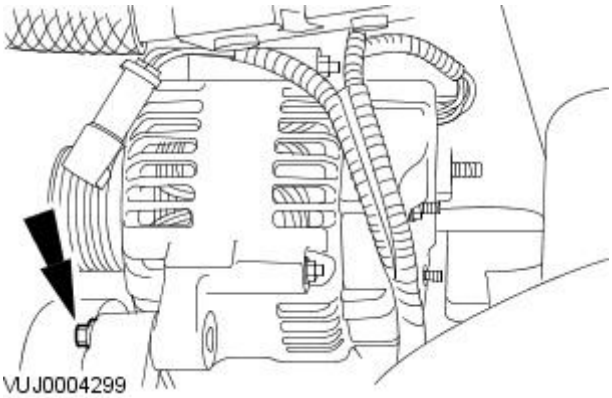

2. Tighten to 25 Nm.

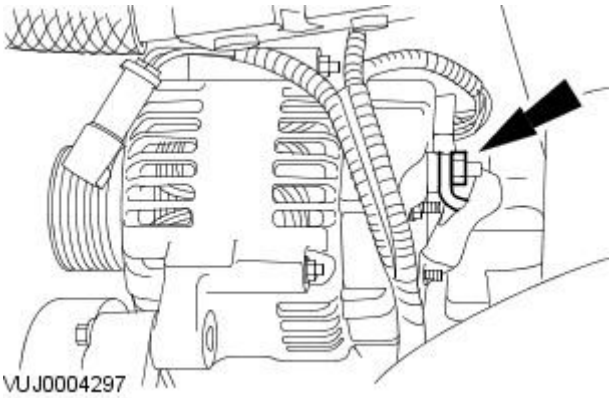

3. Tighten to 12 Nm.

Generator and Regulator - Generator2.0L Duratorq-TDCi / 2.2L Duratorq-TDCi (110kW / 150PS) - Puma

Removal and Installation

Special Tool(s)	
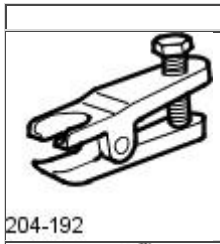 204-192	Separator, ball joint 204-192
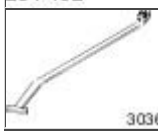 303676	Release tool, belt tensioner 303-676

Removal

1. Disconnect the battery ground cable.
   For additional information, refer to: Battery Disconnect and Connect (414-01 Battery, Mounting and Cables, General Procedures).
2. Remove the air deflector.
   For additional information, refer to: Air Deflector - 2.0L Duratorq-TDCi/2.2L Duratorq-TDCi (110kW/150PS) - Puma (501-02 Front End Body Panels, Removal and Installation).
3. Remove the front, right-hand wheel and tire.
   For additional information, refer to: Wheel and Tire (204-04 Wheels and Tires, Removal and Installation).
4. Remove the right-hand wheel arch liner access cover.

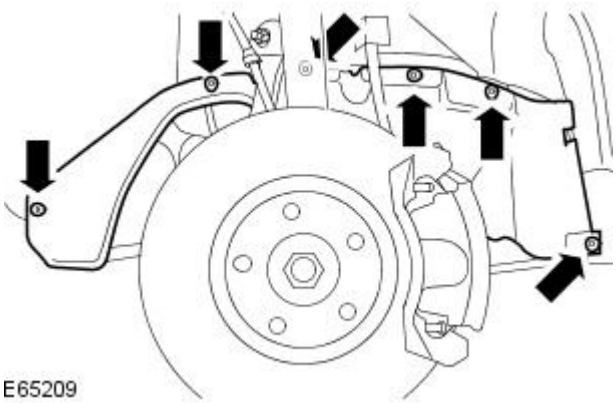
E65209

5. Remove the tie-rod end retaining nut.

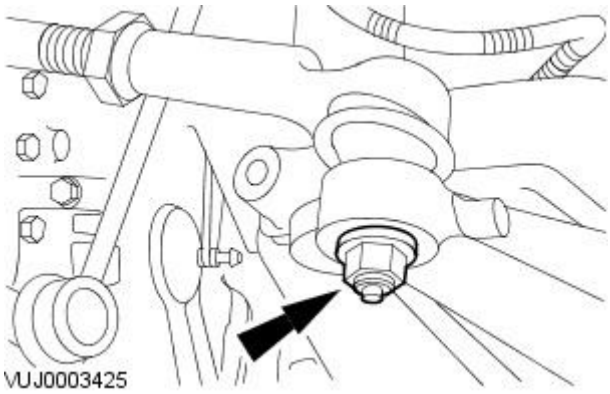
VUJ0003425

6. NOTE: When the tie-rod end is separated from the wheel hub assembly, the ball joint seal should be protected to prevent damage.

   Using the special tool, detach the tie-rod end.

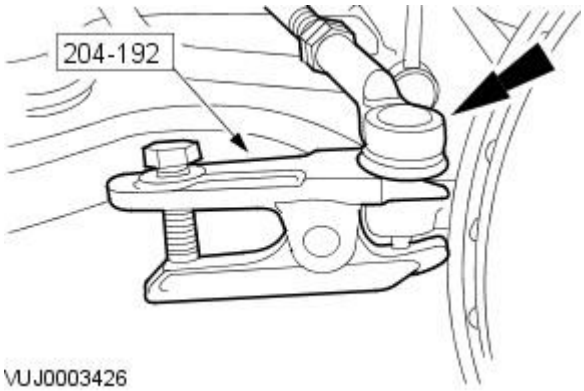

VUJ0003426

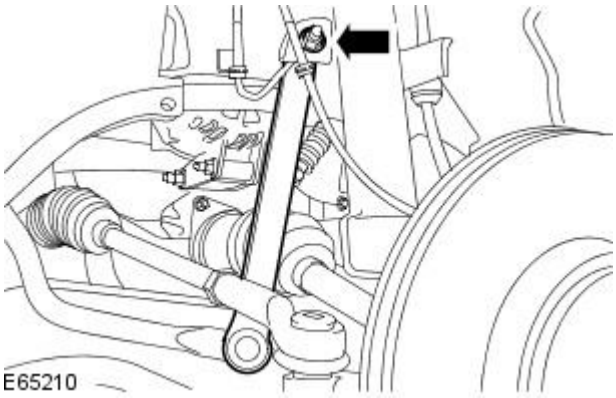

7. Detach the right-hand stabilizer bar link.

- Reposition the anti-lock brake system (ABS) wiring harness mounting bracket.

8. Using the special tool, detach the accessory drive belt.

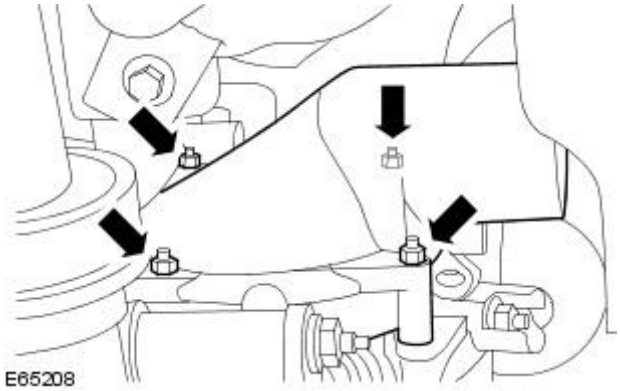

9. Remove the generator cooling duct from the generator.

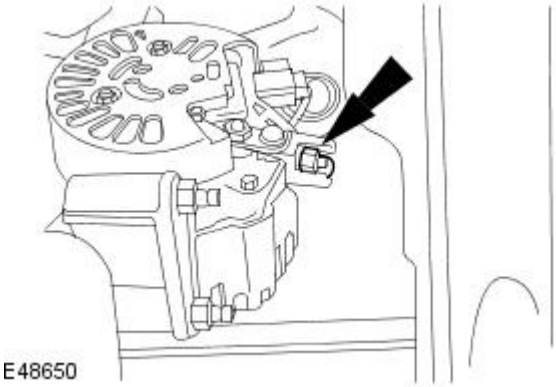

10. Detach the generator positive cable.

11. Disconnect the generator electrical connector.

12. Remove the generator upper retaining bolt.

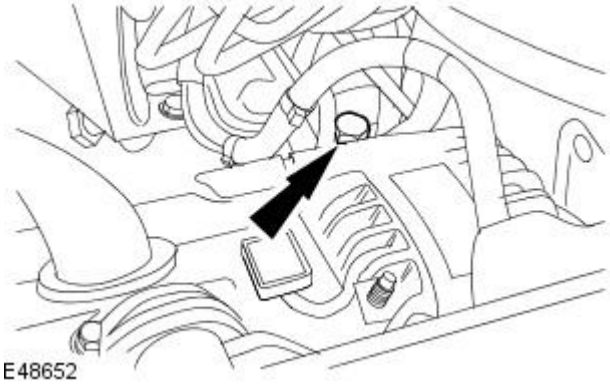

13. Remove the generator retaining nuts.

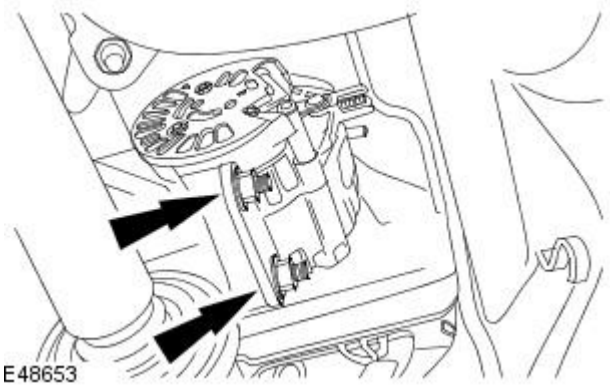

14. Remove the generator mounting studs.

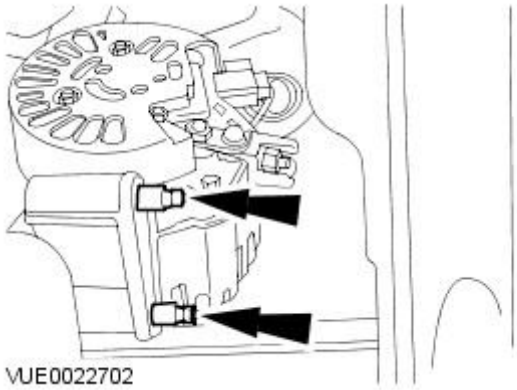

15. Remove the generator.

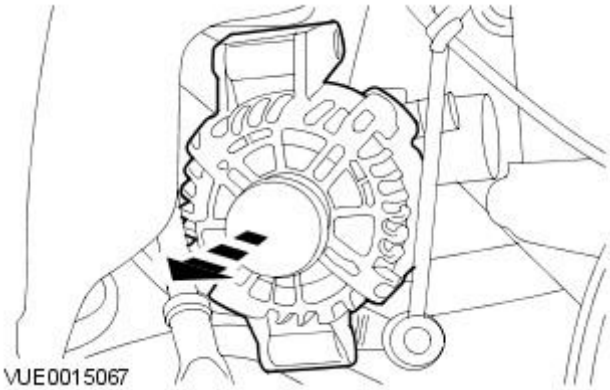

Installation

1. Install the generator.

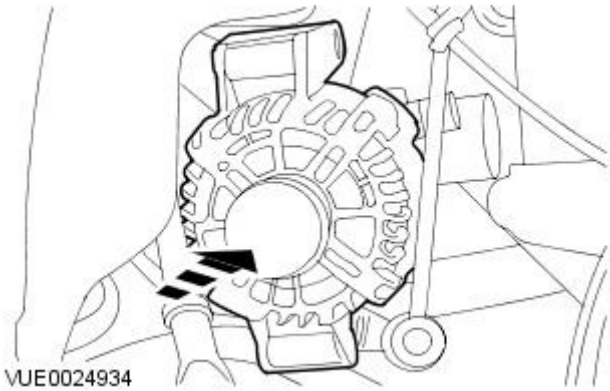

2. Install the generator mounting studs.

- Tighten to 15 Nm.

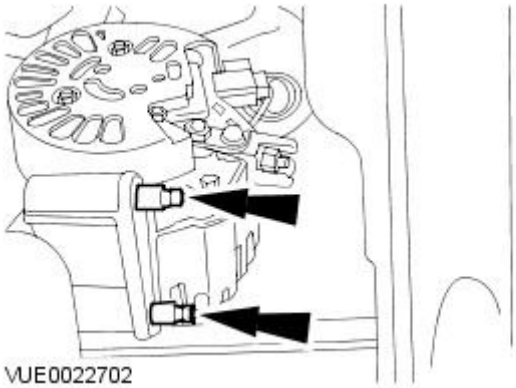

3. Loosely install the generator retaining nuts.

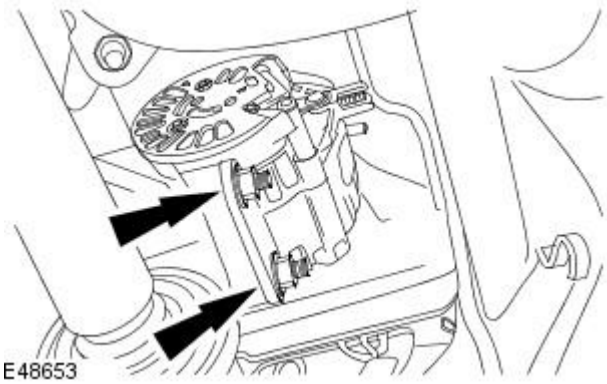

4. Install the generator upper retaining bolt.

1. Tighten to 47 Nm.

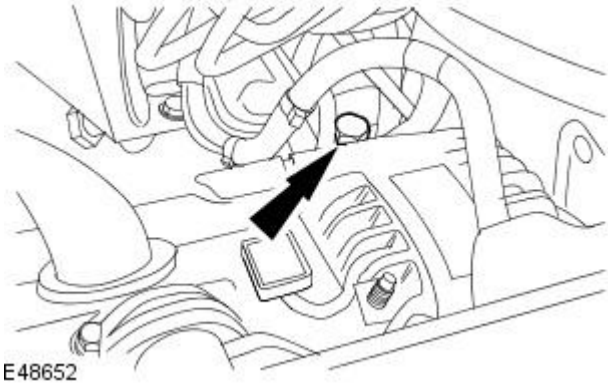

5. Tighten to 47 Nm.

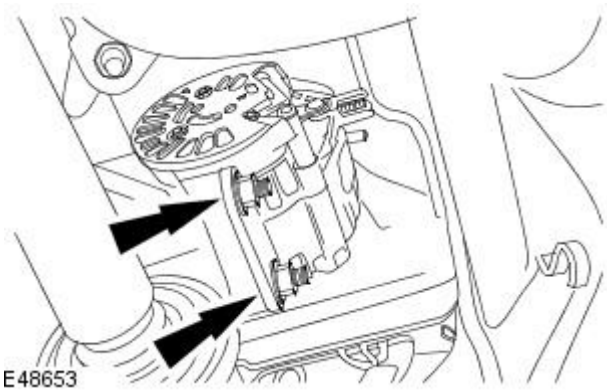

6. Connect the generator electrical connector.

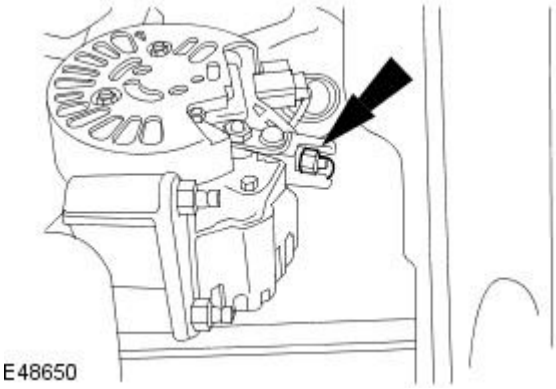

7. Attach the generator positive cable.

- Tighten to 12 Nm.

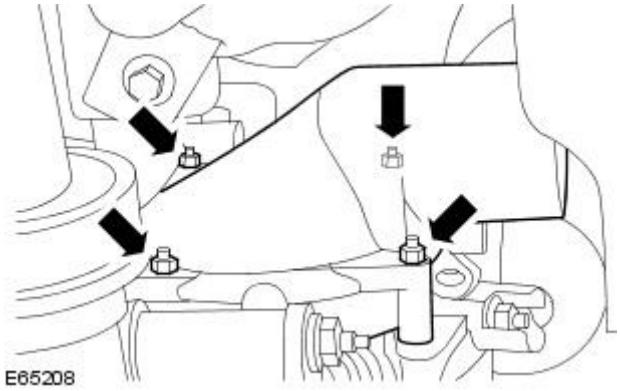

8. Install the generator cooling duct to the generator.

- Tighten to 4 Nm.

9. Using the special tool, attach the accessory drive belt.

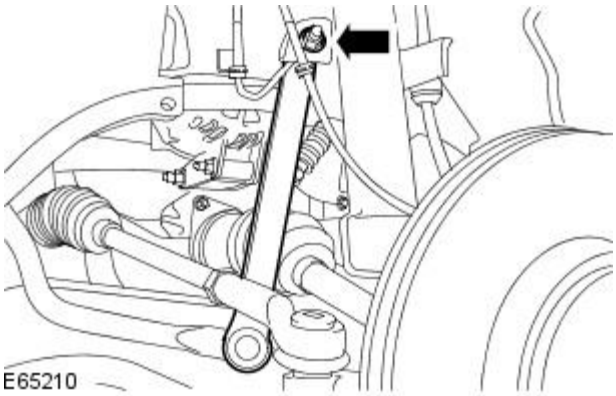

10. Attach the right-hand stabilizer bar link.

- Attach the ABS wiring harness mounting bracket.
- Tighten to 48 Nm.

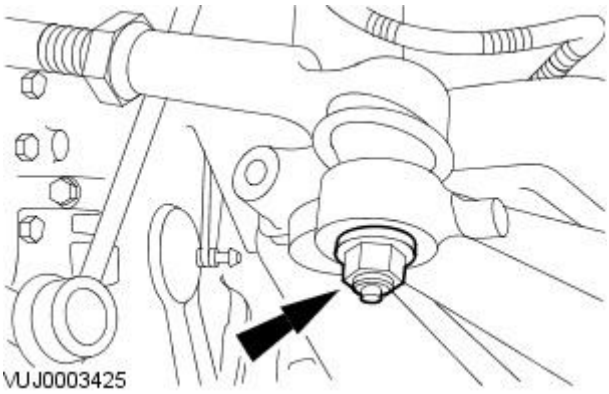

11. Install the tie-rod end and the tie-rod end retaining nut.

- Tighten to 35 Nm.

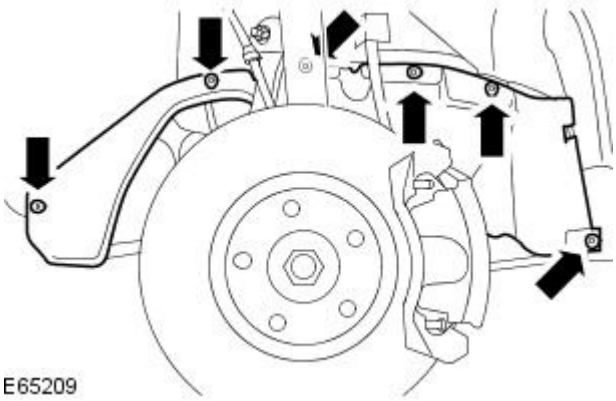

12. Install the right-hand wheel arch liner access cover.

13. Install the front, right-hand wheel and tire.
For additional information, refer to: Wheel and Tire (204-04 Wheels and Tires, Removal and Installation).

14. Install the air deflector.
For additional information, refer to: Air Deflector - 2.0L Duratorq-TDCi/2.2L Duratorq-TDCi (110kW/150PS) - Puma (501-02 Front End Body Panels, Removal and Installation).

15. Connect the battery ground cable.
For additional information, refer to: Battery Connect (414-01 Battery, Mounting and Cables, General Procedures).

Information and Entertainment System - General Information - Audio System

Diagnosis and Testing

Principle of Operation

For a detailed description of the Audio System and components, refer to the relevant Description and Operation section in the workshop manual. REFER to:

Audio System (415-01 Audio Unit, Description and Operation),
Antenna (415-02 Antenna, Description and Operation),
Speakers (415-03 Speakers, Description and Operation).

Inspection and Verification

1. **1.** Verify the customer concern.
2. **2.** Visually inspect for obvious signs of mechanical or electrical damage.

• NOTE: Before any testing of the 'audio sound quality' make sure that the cassette tape mechanism is cleaned using the Jaguar cleaning tape. Any testing material (tape, CD, radio, mini disc) should be of known 'good quality'. Avoid using tapes that are old, home recordings, or damaged. Avoid using compact discs that are scratched, dirty, CDR's or CDRW's. Avoid using radio stations that are in the AM band, weak signal strength, inside buildings or poor reception areas. Use a good sound source for testing.

Mechanical	Electrical
• Cassette tape mechanism cleanliness • Compact disc cleanliness • Mini disc cleanliness	• Fuse(s) • Wiring Harness For Damage And Corrosion • Electrical Connector(s) Loose, Damaged Or Corrosion

3. **3.** If an obvious cause for an observed or reported concern is found, correct the cause (if possible) before proceeding to the next step.
4. • NOTE: If a new audio unit is being installed under warranty, please supply the digital data bus (D2B) ring configuration and the diagnostic trouble code(s) with the returned unit to aid fault replication.

   4. If the cause is not visually evident, verify the symptom and refer to the Jaguar approved diagnostic system.

DTC Index

Gateway module

CAUTION: When probing connectors to take measurements in the course of the pinpoint tests, use the adaptor kit, part number 3548-1358-00

• NOTE: If the control module/component is suspect and the vehicle remains under manufacturer warranty, refer to the Warranty Policy and Procedures manual (section B1.2), or determine if any prior approval program is in operation, prior to the installation of a new module/component.

• NOTE: When performing voltage or resistance tests, always use a digital multi meter (DMM) accurate to three decimal places and with a current calibration certificate. When testing resistance, always take the resistance of the DMM leads into account.

• NOTE: Check and rectify basic faults before beginning diagnostic routines that involve pinpoint tests.

• NOTE: Inspect connectors for signs of water ingress, and pins for damage and/or corrosion.

• NOTE: If DTCs are recorded and, after performing the pinpoint tests, a fault is not present, an intermittent concern may be the cause. Always check for loose connections and corroded terminals.

DTC	Description	Possible Causes	Action
B11A4	DAB L Band Antenna	• Gateway module (digital audio broadcast band L band) antenna circuit - short to power, ground or open circuit	Carry out any pinpoint tests associated with this DTC using the manufacturer approved diagnostic system. Refer to electrical circuit diagrams, notes and check (digital audio broadcast L band) antenna circuit for short to power, ground or open circuit
B11A5	DAB Band 3 Antenna	• Gateway module (digital audio broadcast band 3) antenna circuit - short to power, ground or open circuit	Carry out any pinpoint tests associated with this DTC using the manufacturer approved diagnostic system. Refer to electrical circuit diagrams, notes and check (digital audio broadcast band 3) antenna circuit for short to power, ground or open circuit
B1238	High Temperature	• Gateway module - over temperature	Check gateway module and location for causes of excessive temperature, install a new gateway module as required, refer to the new module installation note at the top of the DTC Index
B1342	Internal failure in Gateway module	• Gateway module - internal failure	Internal failure install a new gateway module as required, refer to the new module installation note at the top of the DTC Index
B1A89	SDARS or Digital Tuner Antenna	• Gateway module satellite radio module or digital tuner antenna circuit - short to power, ground or open circuit	Carry out any pinpoint tests associated with this DTC using the manufacturer approved diagnostic system. Refer to electrical circuit diagrams, notes and check satellite radio module or digital tuner antenna circuit for short to power, ground or open circuit
B2477	Module Configuration Failure	• Gateway module - configuration failure	The module can be configured using the new module procedure. Check and configure as required
U0193	Lost Communication with Digital Audio Control Module A Satellite Radio Module	• Gateway module - lost communication with satellite radio module	Carry out any pinpoint tests associated with this DTC using the manufacturer approved diagnostic system. Refer to electrical circuit diagrams, notes and check satellite radio module power and bus circuit to gateway module on MOST ring

DTC	Description	Possible Causes	Action
U0194	Lost Communication with Digital Audio Control Module B Digital Audio Broadcast Module	• Gateway module - lost communication with digital audio broadcast module	Carry out any pinpoint tests associated with this DTC using the manufacturer approved diagnostic system. Refer to electrical circuit diagrams, notes and check digital audio broadcast module power and bus circuit to gateway module on MOST ring
U0237	Lost Communication with Digital Audio Control Module C IBOC In Band On Channel / HD Radio	• Gateway module - lost communication with Digital Audio Control Module C	Carry out any pinpoint tests associated with this DTC using the manufacturer approved diagnostic system. Refer to electrical circuit diagrams, notes and check Digital Audio Control Module C power and bus circuit to gateway module on MOST ring
U1A15	Incomplete MOST Ring Reported By ICM	• Gateway module - (MOST) ring break	Carry out any pinpoint tests associated with this DTC using the manufacturer approved diagnostic system. Refer to electrical circuit diagrams, notes and check (MOST) circuit for ring break
U2601	(D2B)Wake-up Line Short to Ground	• Gateway module - wake-up line short to ground	Carry out any pinpoint tests associated with this DTC using the manufacturer approved diagnostic system. Refer to electrical circuit diagrams, notes and check gateway module (D2B) wake-up line for short to ground
U2609	(D2B)Wake-up pulse width out of spec	• Gateway module - wake-up line fault (pulse< 50mS, pulse > 110mS)	Refer to electrical circuit diagrams, notes and check gateway module (D2B) wake-up line circuit for fault
U2610	(D2B) Slave ECU fails to receive a report position	• Gateway module - during initialization no position status report is received from one or more slave modules	Refer to electrical circuit diagrams, notes and check (D2B) slave modules and circuit for fault, replace as required, refer to the new module installation note at the top of the DTC Index
U2611	(D2B) Slave ECU fails to receive an alarm clear command	• Gateway module - on entering alarm state, slave ECU has failed to receive alarm clear command	Refer to electrical circuit diagrams, notes and check (D2B) slave modules and circuit for fault, replace as required, refer to the new module installation note at the top of the DTC Index
U3004	Digital Tuner (Most slave) Internal fault	• Gateway module - digital tuner MOST slave module is inoperative	Refer to electrical circuit diagrams, notes and check digital tuner module replace as required, refer to the new module/component installation note at the top of the DTC Index
U3098	Digital Tuner (Most slave) Over temperature	• Gateway module - digital tuner (Most slave) is hot	Check digital tuner module and location for causes of excessive temperature, install a new module as required, refer to the new module installation note at the top of the DTC Index

Radio Head Unit

CAUTION: When probing connectors to take measurements in the course of the pinpoint tests, use the adaptor kit, part number 3548-1358-00

• NOTE: If the control module/component is suspect and the vehicle remains under manufacturer warranty, refer to the Warranty Policy and Procedures manual (section B1.2), or determine if any prior approval program is in operation, prior to the installation of a new module/component.

• NOTE: When performing voltage or resistance tests, always use a digital multimeter (DMM) accurate to three decimal places and with a current calibration certificate. When testing resistance, always take the resistance of the DMM leads into account.

• NOTE: Check and rectify basic faults before beginning diagnostic routines that involve pinpoint tests.

• NOTE: Inspect connectors for signs of water ingress, and pins for damage and/or corrosion.

• NOTE: If DTCs are recorded and, after performing the pinpoint tests, a fault is not present, an intermittent concern may be the cause. Always check for loose connections and corroded terminals.

DTC	Description	Possible Causes	Action
B1238	Over Temperature Fault	• Radio head unit, CD multichanger - overheated (+80 degrees Celsius)	Check cd multichanger module and location for causes of excessive temperature, install a new module as required, refer to the new module installation note at the top of the DTC Index
B1342	ECU Internal Failure	• Radio head unit - no radio function	Refer to electrical circuit diagrams, notes and check Radio head unit radio functions for fault, replace as required, refer to the new module installation note at the top of the DTC Index
B2004	Internal Media Over Temperature Fault	• Radio head unit - internal cd/md has overheated	Check Radio head unit and location for causes of excessive temperature, install a new module as required, refer to the new module installation note at the top of the DTC Index
B2401	Audio Tape Deck Mechanism Fault	• Radio head unit - tape loading, tape eject, tape stuck, tape cut and seek stop error	Refer to electrical circuit diagrams, check radio head unit install a new module as required, refer to the new module installation note at the top of the DTC Index
B2403	Audio CD/DJ Internal Fault	• Radio head unit, CD multichanger module - cd eject error, cd loading error	Refer to electrical circuit diagrams, notes and check cd multichanger module install a new module as required, refer to the new module installation note at the top of the DTC Index
B2477	Module Configuration Failure	• Radio head unit - configuration failure	The module can be configured using the new module procedure. Check and configure as required
B2888	Audio Headunit Media Fault	• Radio head unit - tape loading, tape eject, tape stuck, tape cut and seek stop error	Check radio head unit install a new module as required, refer to the new module installation note at the top of the DTC Index

DTC	Description	Possible Causes	Action
C1977	Audio Steering Wheel Switch Circuit Short To Ground	• Radio head unit, audio steering wheel switch circuit - short to ground	Refer to electrical circuit diagrams, notes suspect the audio steering wheel switch check for circuit short to ground
U0147	Lost Communication With Gateway "B"	• Radio head unit, gateway module - no response (D2B/MOST)	Refer to electrical circuit diagrams, notes and check radio head unit to gateway module control and power circuit`s, install a new module as required, refer to the new module installation note at the top of the DTC Index
U1262	SCP (J1850) Communication Bus Fault	• Radio head unit, ECU not responding - internal standard corporate protocol (SCP) chip failure	Refer to electrical circuit diagrams, notes and check radio head unit SCP circuit for fault, suspect the radio head unit, install a new module as required, refer to the new module installation note at the top of the DTC Index
U2003	Audio Compact Disk / Disk Jockey Unit is Not Responding	• Radio head unit, CD multichanger - no response(D2B)	Carry out any pinpoint tests associated with this DTC using the manufacturer approved diagnostic system. Refer to electrical circuit diagrams, notes and check cd multichanger module and D2B circuit for fault, install a new module as required, refer to the new module installation note at the top of the DTC Index
U2008	Audio Phone Not Responding	• Radio head unit, telephone control module - no response(D2B)	Carry out any pinpoint tests associated with this DTC using the manufacturer approved diagnostic system. Refer to electrical circuit diagrams, notes and check telephone control module and D2B circuit for fault, install a new module as required, refer to the new module installation note at the top of the DTC Index
U2019	Audio Voice Module Not Responding	• Radio head unit, audio voice module - no response(D2B)	Carry out any pinpoint tests associated with this DTC using the manufacturer approved diagnostic system. Refer to electrical circuit diagrams, notes and check audio voice module and D2B circuit for fault, install a new module as required, refer to the new module/component installation note at the top of the DTC Index
U2601	(D2B)Wake-up Line Short To Ground	• Radio head unit, gateway module - wake-up line short to ground	Carry out any pinpoint tests associated with this DTC using the manufacturer approved diagnostic system. Refer to electrical circuit diagrams, notes and check gateway module (D2B) wake-up line for short to ground
U2602	Incomplete MOST Ring (fault report received)	• Radio head unit - (MOST) ring circuit fault	Carry out any pinpoint tests associated with this DTC using the manufacturer approved diagnostic system. Check radio head unit for most ring circuit fault
U2603	Incomplete MOST Ring (No Fault Report Received)	• Radio head unit - (MOST) ring circuit fault	Carry out any pinpoint tests associated with this DTC using the manufacturer approved diagnostic system. Check (MOST) ring for circuit fault
U2604	Incomplete MOST Ring (Corrupted Fault Report Received)	• Radio head unit - (MOST) ring circuit fault	Refer to electrical circuit diagrams, notes and check (MOST) ring for circuit fault
U2605	Master ECU Unable To Initialize It's Address	• Radio head unit - (MOST) ring circuit fault (more than one master on the MOST ring)	Refer to electrical circuit diagrams, notes and check for configuration fault on (MOST) ring modules. Install a new module as required, refer to the new module installation note at the top of the DTC Index
U2606	Slave ECU Unable To Initialize It's Address	• Radio head unit - (MOST) ring circuit fault slave ecu configuration fault	Refer to electrical circuit diagrams, notes and check for configuration fault on (MOST) ring modules. Install a new module as required, refer to the new module installation note at the top of the DTC Index
U2607	Slave ECU (switched into bypass mode)	• Radio head unit - (MOST) ring circuit fault (slave ecu configuration fault)	The module can be configured using the new module procedure. Check and configure as required
U2609	(D2B)Circuit Wake-up Line (pulse width out of spec)	• Radio head unit - wake up line circuit fault (pulse< 50mS, pulse > 110mS)	Refer to electrical circuit diagrams, notes and check radio head unit(D2B) wake up line circuit for fault
U2613	Navigation Module Not Responding on D2B	• Radio head unit - no response from navigation module	Carry out any pinpoint tests associated with this DTC using the manufacturer approved diagnostic system. Check navigation module to front audio control module circuit
U2614	Amp Module Not Responding on D2B	• Radio head unit - no response from audio amplifier module	Carry out any pinpoint tests associated with this DTC using the manufacturer approved diagnostic system. Check audio amplifier module to front audio control module circuit

Digital Audio Broadcast Module

CAUTION: When probing connectors to take measurements in the course of the pinpoint tests, use the adaptor kit, part number 3548-1358-00

• NOTE: If the control module/component is suspect and the vehicle remains under manufacturer warranty, refer to the Warranty Policy and Procedures manual (section B1.2), or determine if any prior approval program is in operation, prior to the installation of a new module/component.

• NOTE: When performing voltage or resistance tests, always use a digital multimeter (DMM) accurate to three decimal places and with a current calibration certificate. When testing resistance, always take the resistance of the DMM leads into account.

• NOTE: Check and rectify basic faults before beginning diagnostic routines that involve pinpoint tests.

• NOTE: Inspect connectors for signs of water ingress, and pins for damage and/or corrosion.

• NOTE: If DTCs are recorded and, after performing the pinpoint tests, a fault is not present, an intermittent concern may be the cause. Always check for loose connections and corroded terminals.

DTC	Description	Possible Causes	Action
B11A411	L-Band antenna	• DAB L-Band antenna Circuit - short to ground	Refer to electrical circuit diagrams and check DAB L-band antenna circuit for short to ground

DTC	Description	Possible Causes	Action
B11A413	L-Band antenna	• DAB L-Band antenna Circuit - open circuit	Refer to electrical circuit diagrams and check DAB L-band antenna circuit for open circuit
B11-A511	Band 3 antenna	• DAB band 3 antenna circuit - short to ground	Refer to electrical circuit diagrams and check DAB band 3 antenna circuit for short to ground
B11-A513	Band 3 antenna	• DAB band 3 antenna circuit - open circuit	Refer to electrical circuit diagrams and check DAB band 3 antenna circuit for open circuit
U300004	Control module	• System internal failure	Install a new digital audio broadcast module
U30004A	Control module	• Incorrect component installed	Install a new digital audio broadcast module or reconfigure the digital audio broadcast module using the manufacturer approved diagnositc system
U300055	Control module	• Incorrect car configuration file data received	Check/update car configuration file using manufacturer approved diagnostic system
U300087	Control module	• Missing message	Check GEM for DTCs and refer to DTC index. Check information and entertainment module for car configuration file and MOST network DTCs and refer to relevant DTC index. Carry out MOST/CAN network tests using the manufacturer approved equipment.
U300098	Control module	• Component or system over temperature	Check for additional DTCs and refer to relevant DTC index, check/monitor system for re-occurence
U300362	Battery voltage	• Mis-match in battery voltage of 2 volts or more between digital broadcast module and GEM	Refer to electrical circuit diagrams and check power distribution to the DAB module and GEM. Repair any wirirng faults using approved materials and methods. Clear DTCs and tetest system to ensure correct operation.

Audio Unit - Audio System

Description and Operation

Base cassette

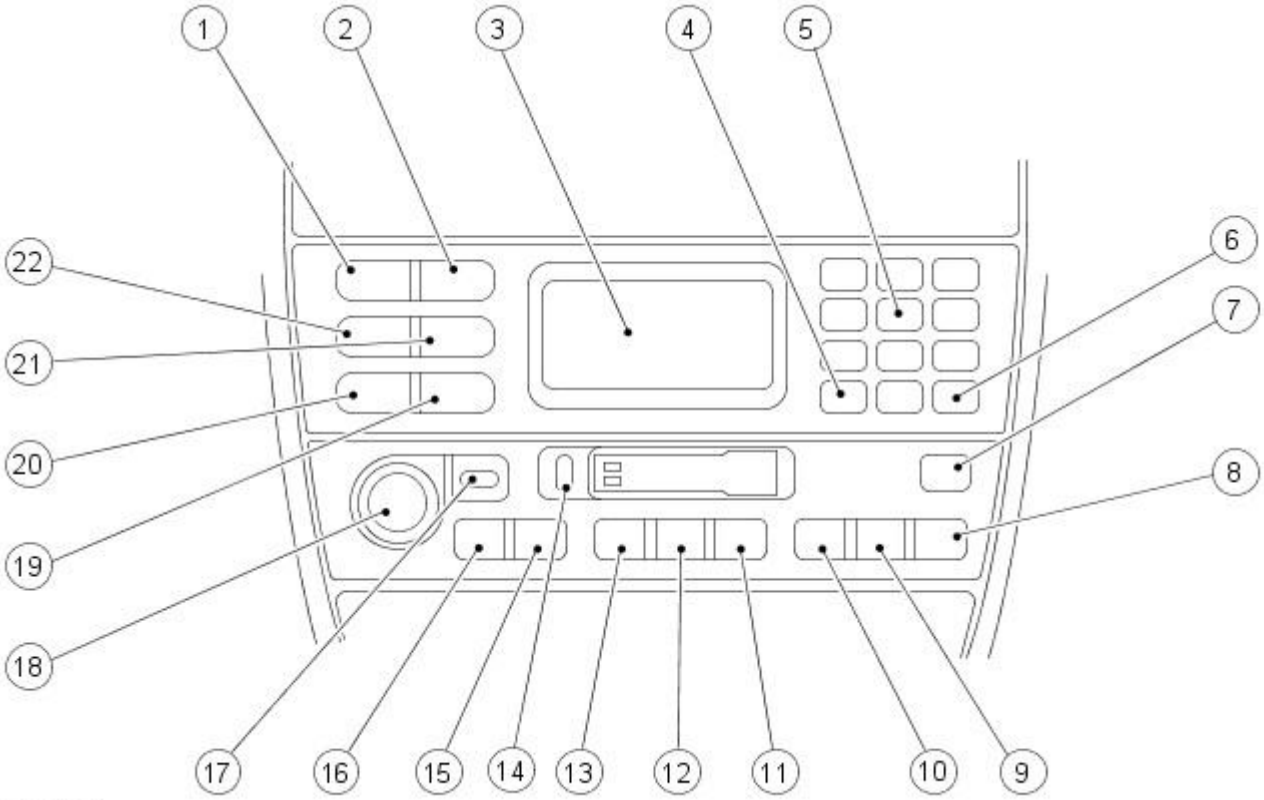

VUJ0004284

Item	Part Number	Description
1	—	Dolby noise reduction button
2	—	Repeat CD button
3	—	Audio system display
4	-	Seek a stored number from the phones memory
5	—	Radio station pre-set buttons
6	—	Seek a stored number from the phones memory
7	—	CD track mix button
8	—	Priority programme type button
9	—	Traffic announcement button
10	—	Auto memory button
11	—	Select CD changer
12	—	Cassette play and side change button
13	—	Audio Source - AM/FM radio
14	-	Cassette eject button
15	—	CD seek forward, cassette fast forward, radio seek forward button
16	—	CD seek back, cassette fast rewind, radio seek back button
17	—	Mode button (volume/bass/treble/balance/fade)
18	—	ON/OFF push (rotary volume/bass/treble/balance/fade) knob
19	—	Phone mode - send/end button
20	—	Phone mode select button
21	—	Memory recall button
22	—	Cancel button

Base CD/MD

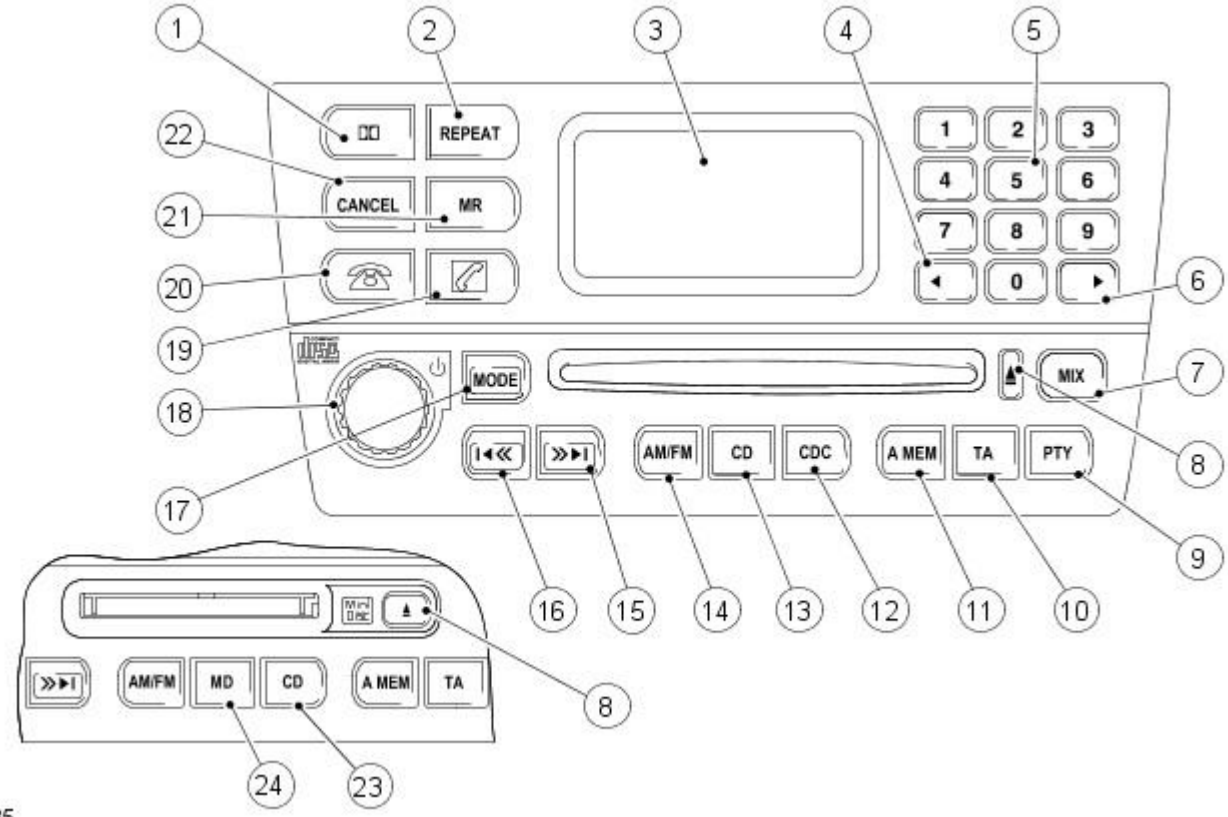

E30385

Item	Part Number	Description
1	-	Mutes audio
2	-	Repeat CD button
3	-	Audio system display
4	-	Seek a stored number from the phones memory
5	-	Radio station pre-set buttons
6	-	Seek a stored number from the phones memory
7	-	Mix CDs or CD/MD tracks button
8	-	Eject CD or MD
9	-	Priority programme type button
10	-	Traffic announcement button
11	-	Auto memory button
12	-	Select CD changer
13	-	Select compact disc when in other audio mode, or CD pause
14	-	Audio Source - AM/FM radio
15	-	CD seek forward, cassette fast forward, radio seek forward button
16	-	CD seek back, cassette fast rewind, radio seek back button
17	-	Mode button (volume/bass/treble/balance/fade)
18	-	ON/OFF push (rotary volume/bass/treble/balance/fade) knob
19	-	Phone mode - send/end button
20	-	Phone mode select button
21	-	Memory recall button
22	-	Cancel button
23	-	Select CD changer
24	-	Select mini disc play when in other audio mode or MD pause

Touch screen cassette

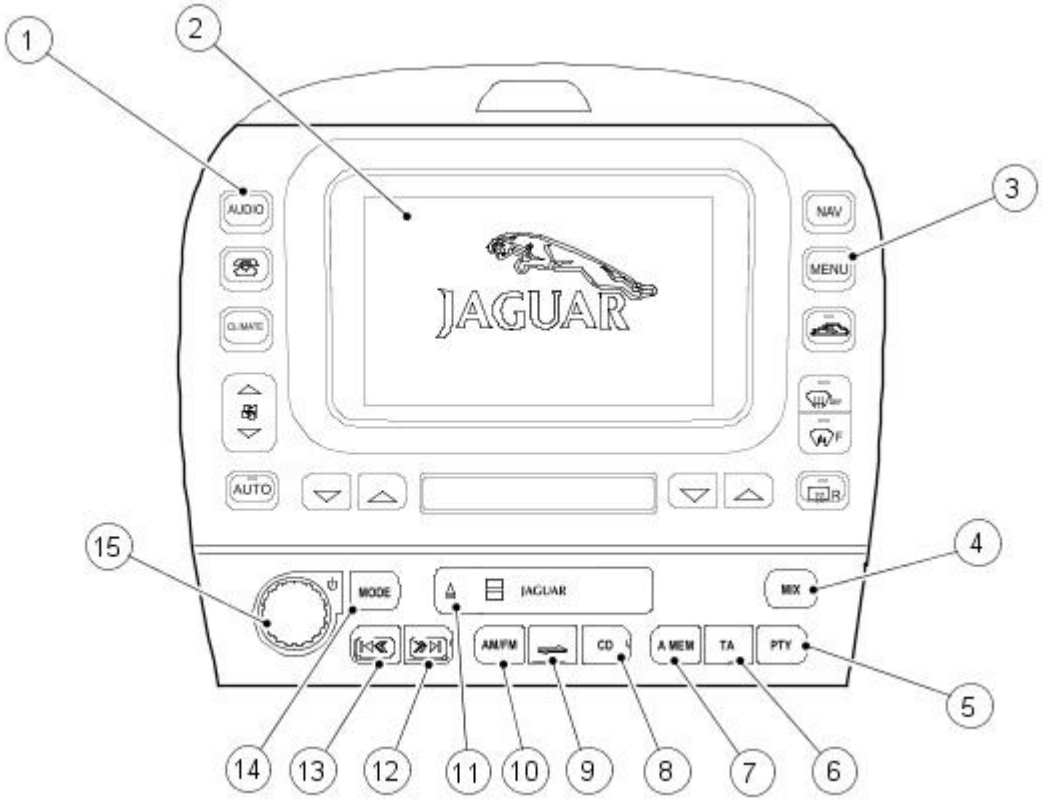

E 30386

Item	Part Number	Description
1	-	On/Off push for touch-screen controls
2	-	Touch-screen display
3	-	Press to access touch-screen options
4	-	CD track mix button
5	-	Priority programme type button
6	-	Traffic announcement button
7	-	Auto memory button
8	-	Select CD changer
9	-	Cassette play and side change button
10	-	Audio Source - AM/FM radio
11	-	Cassette eject button
12	-	CD seek forward, cassette fast forward, radio seek forward button
13	-	CD seek back, cassette fast rewind, radio seek back button
14	-	Mode button (volume/bass/treble/balance/fade)
15	-	ON/OFF push (rotary volume/bass/treble/balance/fade) knob

Touch screen CD/MD

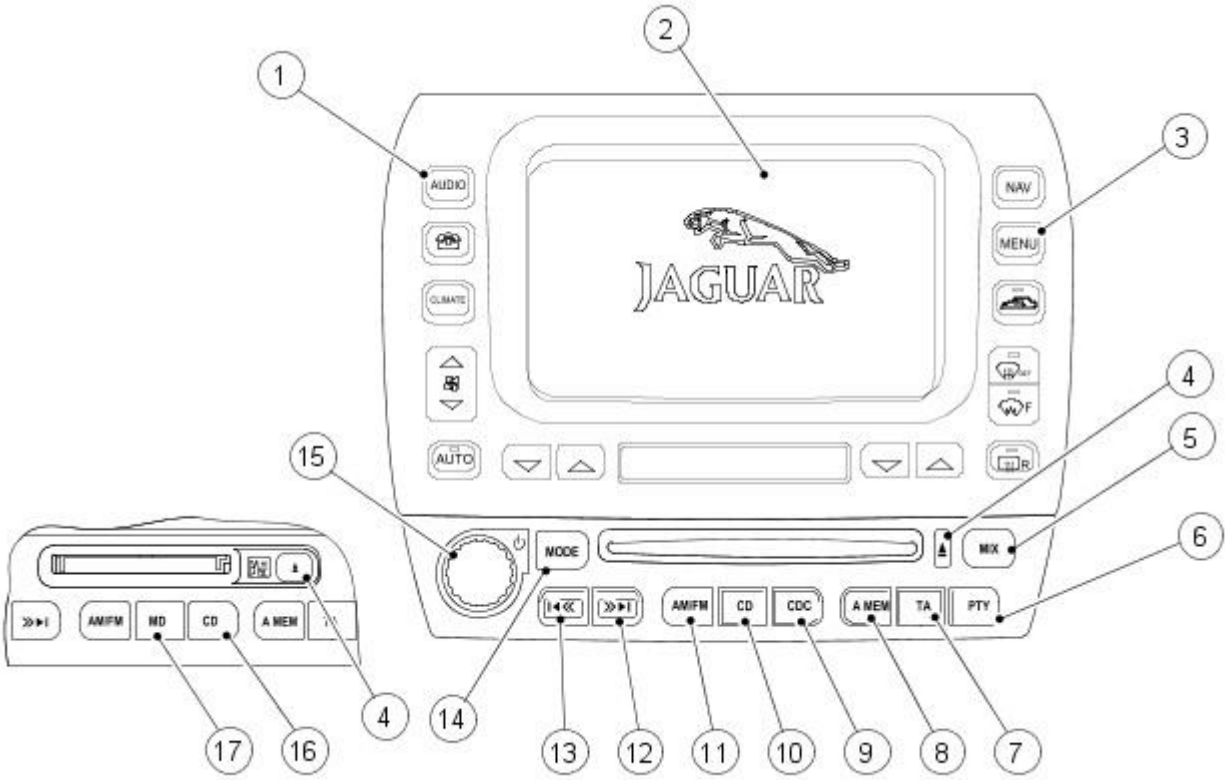

E30387

Item	Part Number	Description
1	-	On/Off push for touch-screen controls
2	-	Touch-screen display

3	-	Press to access touch-screen options
4	-	Eject CD or MD
5	-	Mix CDs or CD/MD tracks button
6	-	Priority programme type button
7	-	Traffic announcement button
8	-	Auto memory button
9	-	Select CD changer
10	-	Select compact disc when in other audio mode, or CD pause
11	-	Audio Source - AM/FM radio
12	-	CD seek forward, cassette fast forward, radio seek forward button
13	-	CD seek back, cassette fast rewind, radio seek back button
14	-	Mode button (volume/bass/treble/balance/fade)
15	-	ON/OFF push (rotary volume/bass/treble/balance/fade) knob
16	-	Select CD changer
17	-	Select mini disc play when in other audio mode or MD pause

The choice of two entertainment systems is available; base or premium. The radio or mini disc player and the aerial are common to both. Both systems may be operated remotely by use of switches located on the steering wheel.

The premium system has the addition of different speakers, touch screen control and a CD autochanger. The CD autochanger is located in the luggage compartment.

Refer to the Sound System Handbook for setting-up procedures and use, after diagnostic or repair operations.

Published: 11-May-2011

Audio Unit - Audio System

Diagnosis and Testing

For additional information, refer toSection 415-00 Information and Entertainment System - General Information.

Audio Unit - Audio Unit

Removal and Installation

Removal

1. Remove the climate control panel.
   For additional information, refer to Section 412-04 Control Components.
2. Remove the navigation system screen (where fitted).
   For additional information, refer to Section 419-07 Navigation System.
3. Remove the audio unit screws.

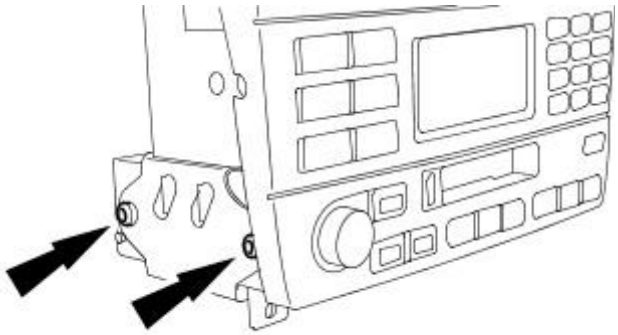

VUJ0004289

4. Remove the audio unit.

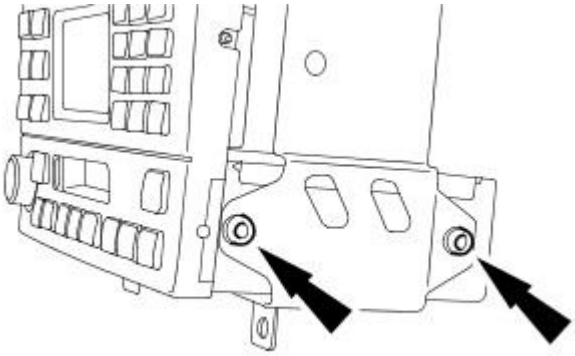

VUJ0004290

Installation

1. NOTE: A new audio unit must be configured using the Jaguar approved diagnostic equipment.

   To install, reverse the removal procedure.

Audio Unit - Audio Unit Amplifier4-Door

Removal and Installation

Removal

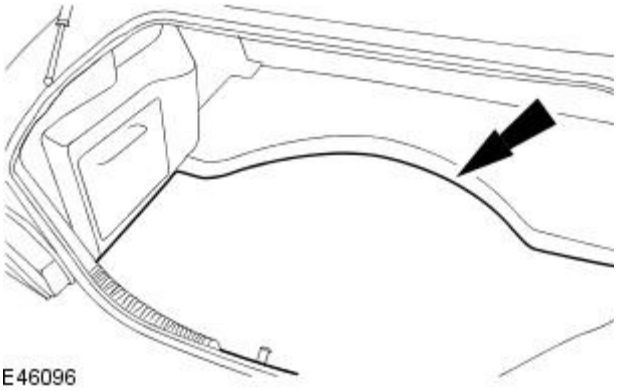

1. Remove the luggage compartment front floor carpet.

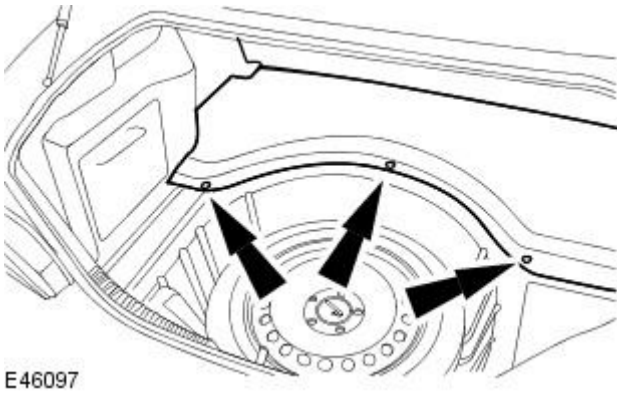

2. Remove the luggage compartment rear floor carpet.

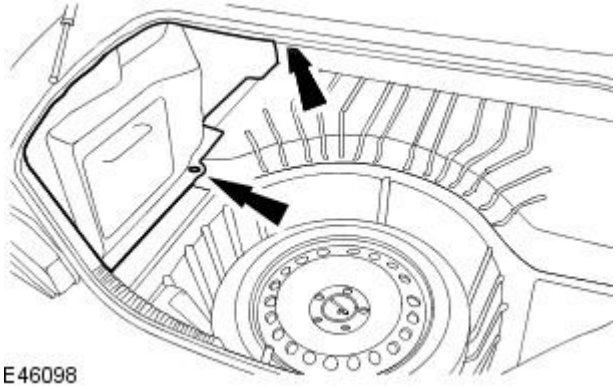

3. Remove the luggage compartment interior trim.

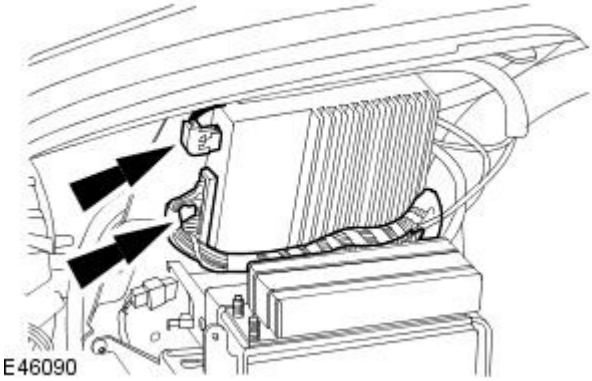

4. Disconnect the audio unit amplifier electrical connectors.

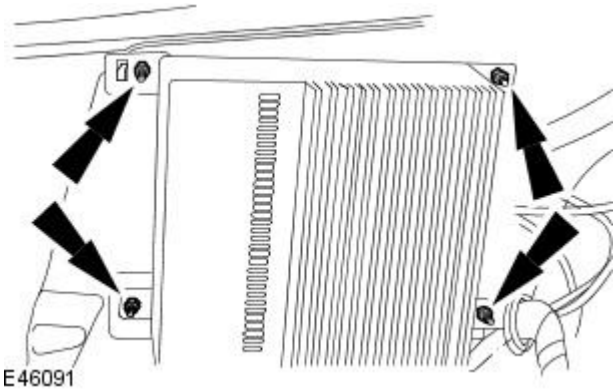

5. Remove the audio unit amplifier.

Installation

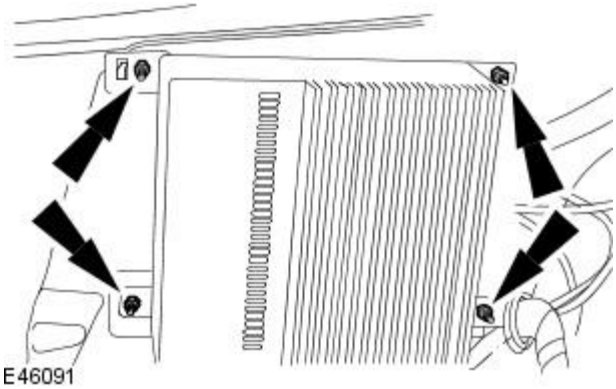

1. To install, reverse the removal procedure.
   - Tighten to 9 Nm.

2. Using the Jaguar approved diagnostic system configure the audio unit amplifier.

Audio Unit - Audio Unit AmplifierWagon

Removal and Installation

Removal

1. NOTE: Make sure the audio unit pin code is available before disconnecting the battery ground cable.

Disconnect the battery ground cable.
For additional information, refer to: Battery Disconnect and Connect (414-01 Battery, Mounting and Cables, General Procedures).

2. Raise the loadspace floor covering.

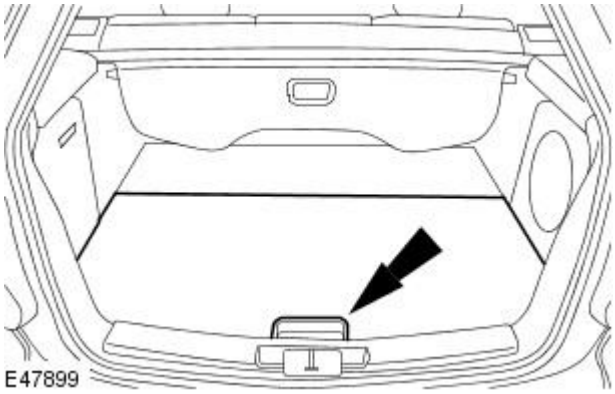

3. Remove the loadspace floor covering.

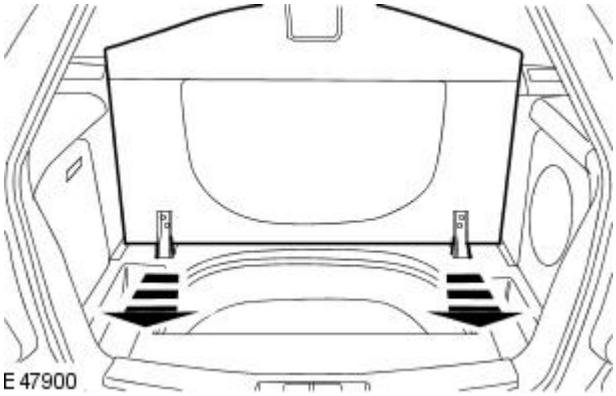

4. Remove the loadspace stowage compartment trim panel.

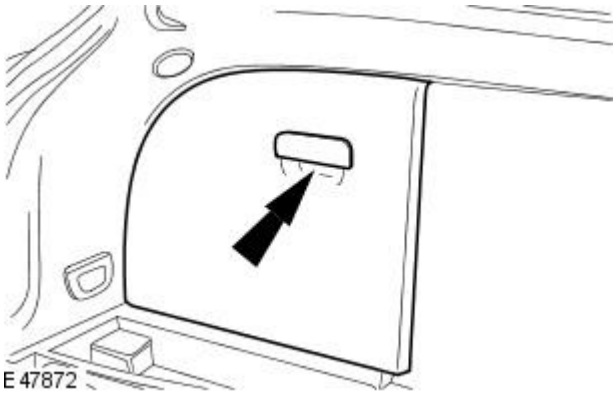

5. Remove the loadspace stowage compartment.

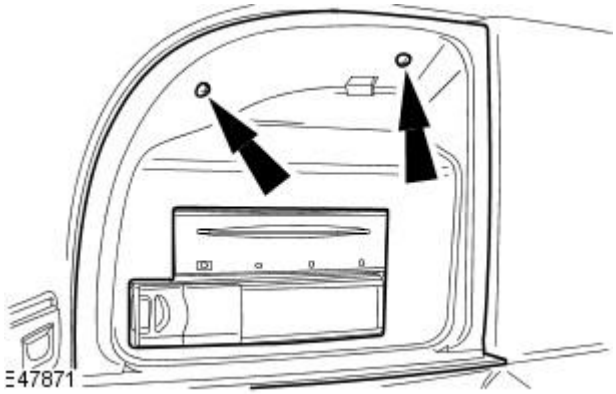

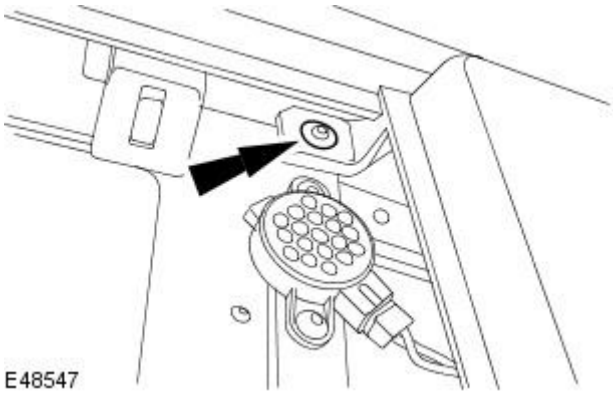

6. Remove the left-hand loadspace side trim panel retaining screw.

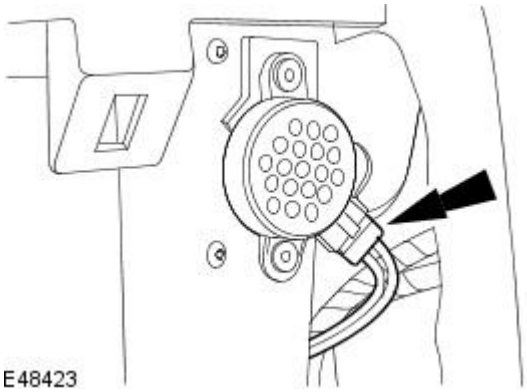

7. Disconnect the parking aid speaker electrical connector.

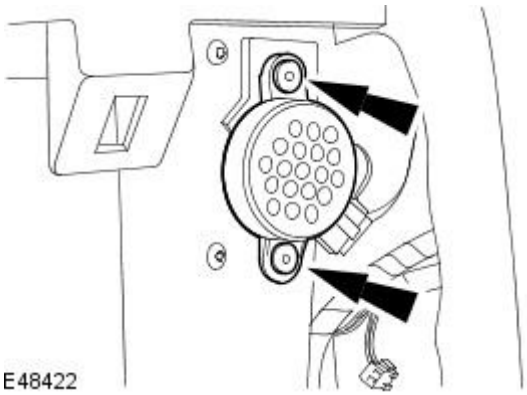

8. Remove the parking aid speaker.

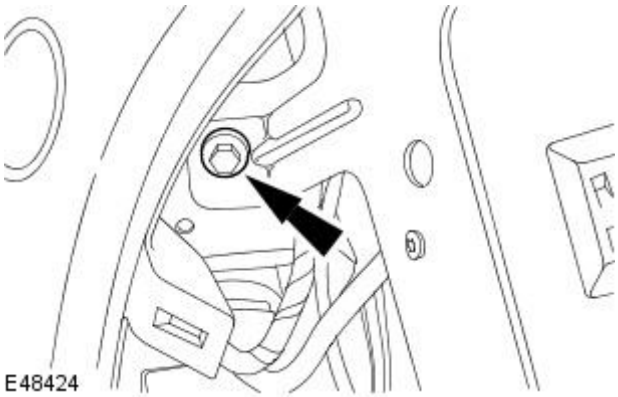

9. Remove the audio unit amplifier retaining bolt.

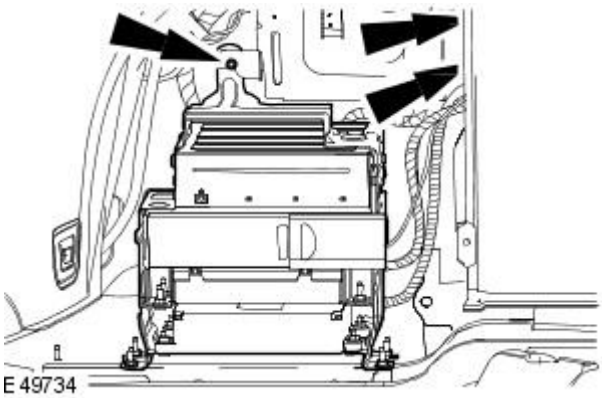

10. Remove the audio unit amplifier retaining bolts.

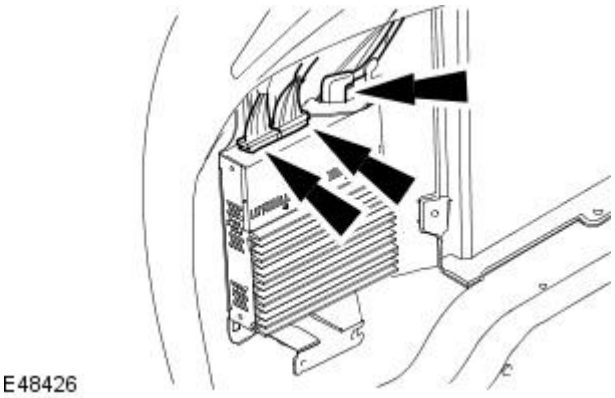

11. Remove the audio unit amplifier.

Installation

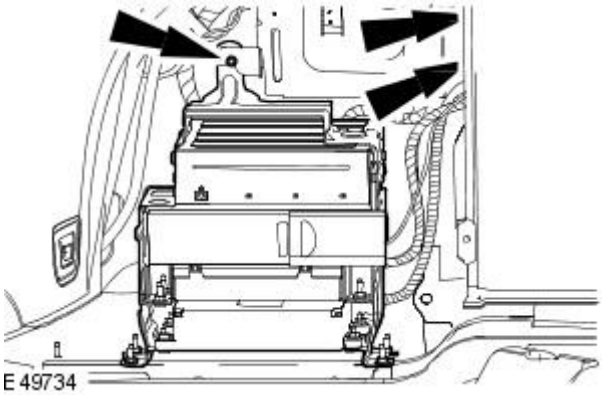

1. To install, reverse the removal procedure.

- Tighten to 9 Nm.

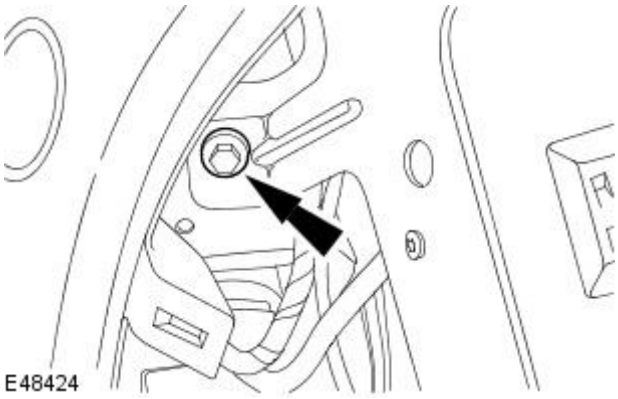

2. Tighten to 9 Nm.

3. Connect the battery ground cable.
For additional information, refer to: Battery Connect (414-01 Battery, Mounting and Cables, General Procedures).

4. Using the Jaguar approved diagnostic system configure the audio unit amplifier.

Audio Unit - Compact Disc (CD) Changer4-Door

Removal and Installation

Removal

1. NOTE: Make sure the ICE pin code is available before disconnecting the battery ground cable.

Disconnect the battery ground cable.
For additional information, refer to: Battery Disconnect and Connect (414-01 Battery, Mounting and Cables, General Procedures).

2. Remove the luggage compartment front floor carpet.

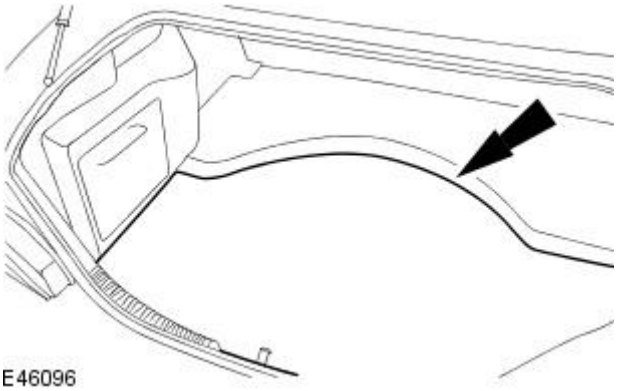

3. Remove the luggage compartment rear floor carpet.

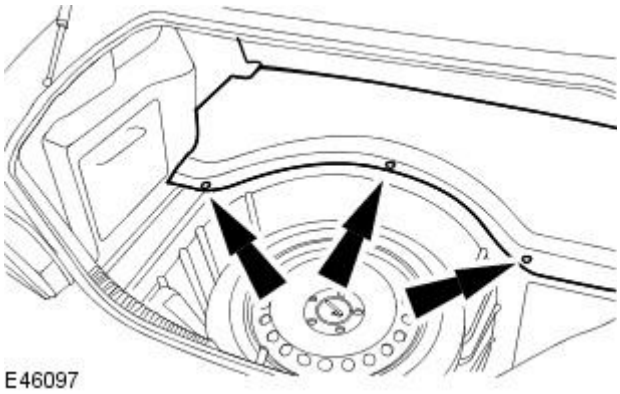

4. Remove the luggage compartment interior trim.

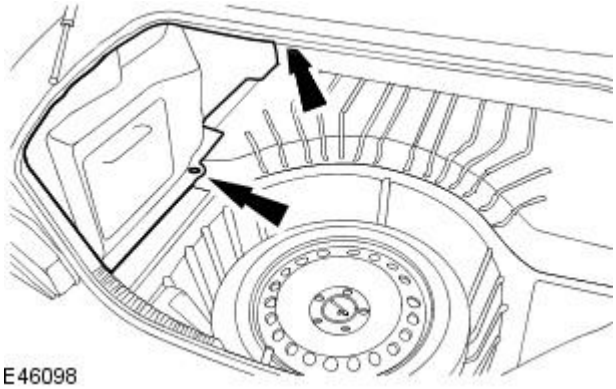

5. Remove the audio unit amplifer.
For additional information, refer to: Audio Unit Amplifier - 4-Door (415-01 Audio Unit, Removal and Installation).

6. Detach the module retaining bracket.

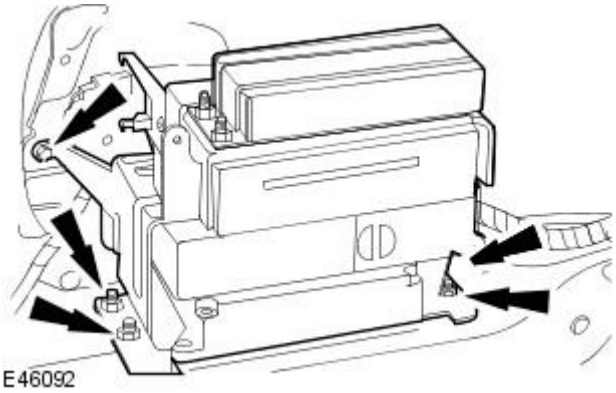

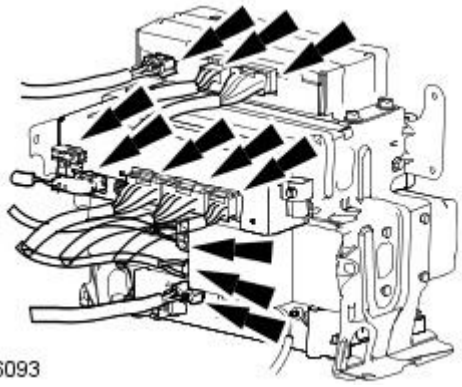
E46093

7. Disconnect the electrical connectors.

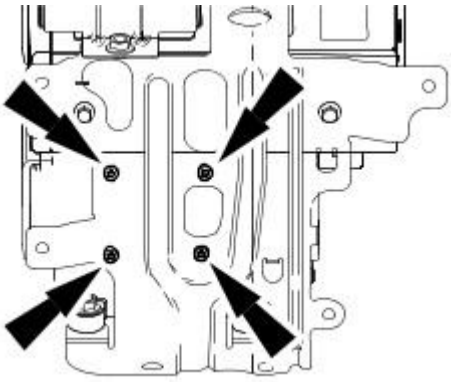
E46162

8. Remove the compact disc (CD) player retaining bolts.

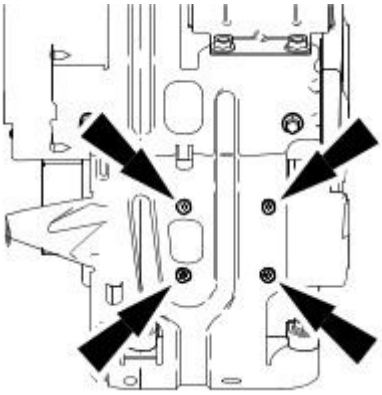
E46163

9. Remove the CD player.

Installation

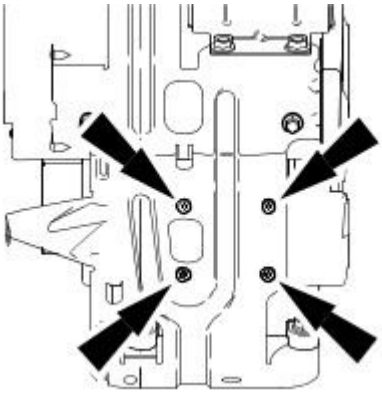
E46163

1. To install, reverse the removal procedure.

- Tighten to 1 Nm.

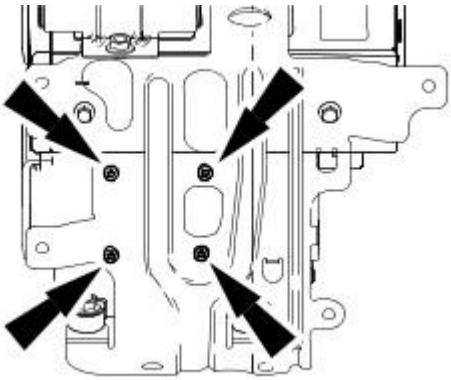

E46162

2. Tighten to 1 Nm.

3. Connect the battery ground cable.
For additional information, refer to: Battery Connect (414-01 Battery, Mounting and Cables, General Procedures).

Audio Unit - Compact Disc (CD) ChangerWagon

Removal and Installation

Removal

1. NOTE: Make sure the audio unit pin code is available before disconnecting the battery ground cable.

Disconnect the battery ground cable.
For additional information, refer to: Battery Disconnect and Connect (414-01 Battery, Mounting and Cables, General Procedures).

2. Raise the loadspace floor covering.

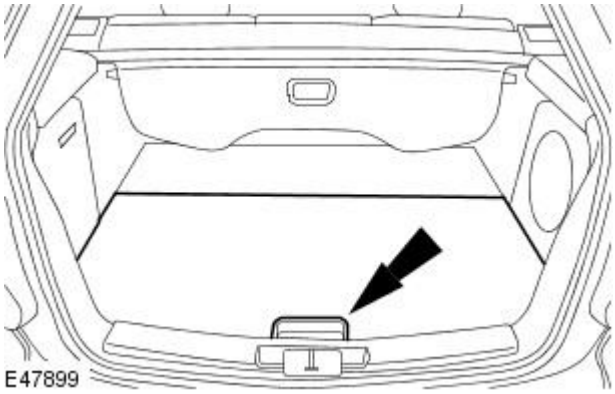

3. Remove the loadspace floor covering.

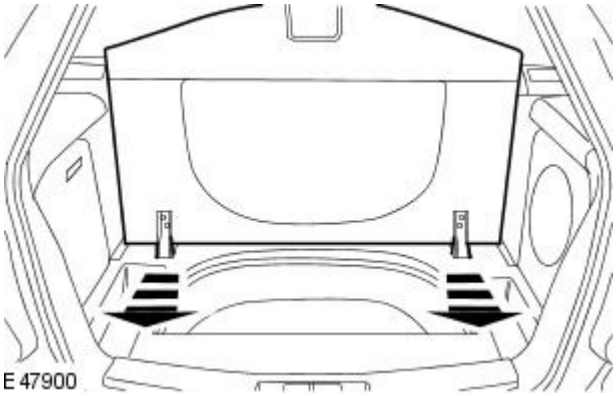

4. Remove the centre loadspace stowage compartment.

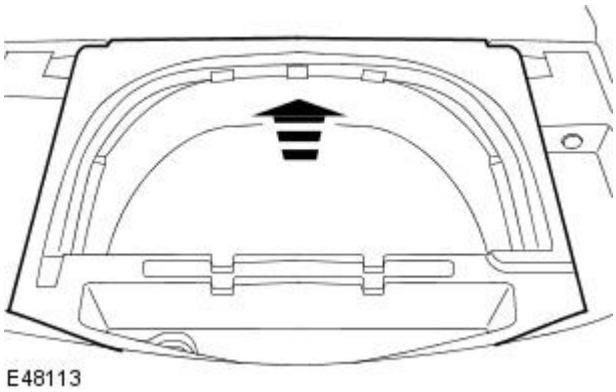

5. Remove the loadspace stowage compartment trim panel.

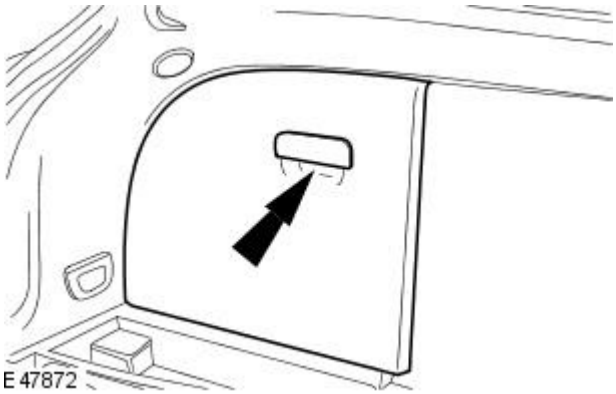

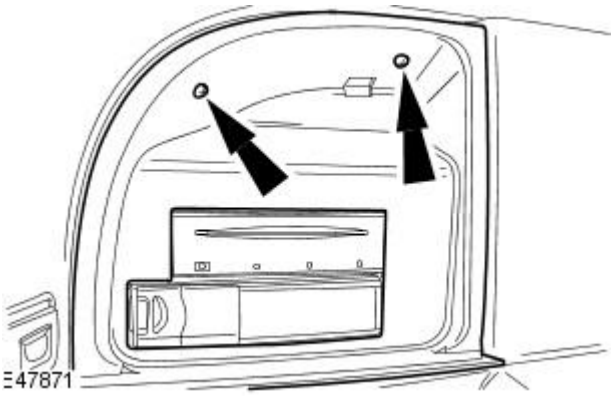

6. Remove the loadspace stowage compartment.

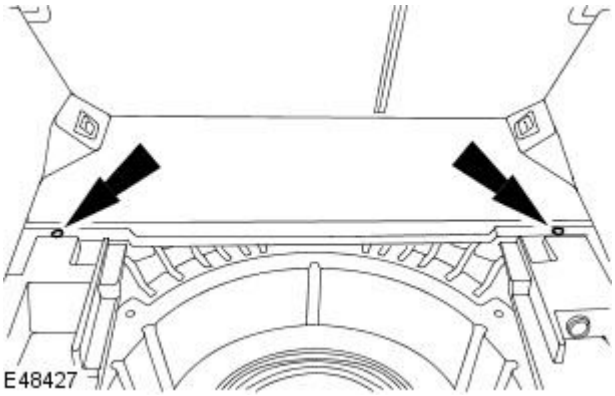

7. Remove the loadspace floor covering retaining screws.

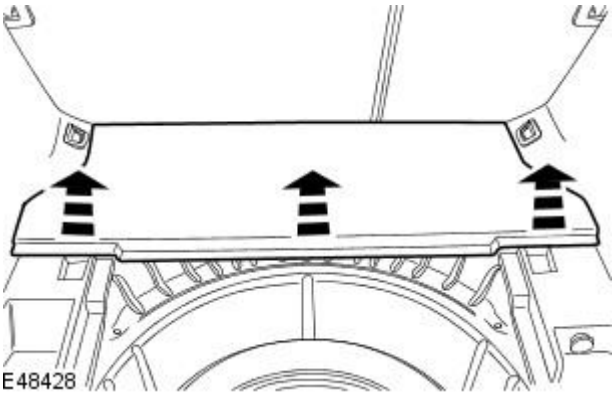

8. Detach the loadspace floor covering upwards.

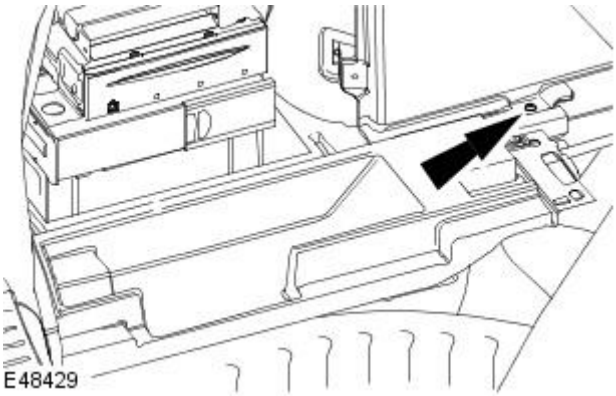

9. Remove the left-hand loadspace stowage compartment retaining screw.

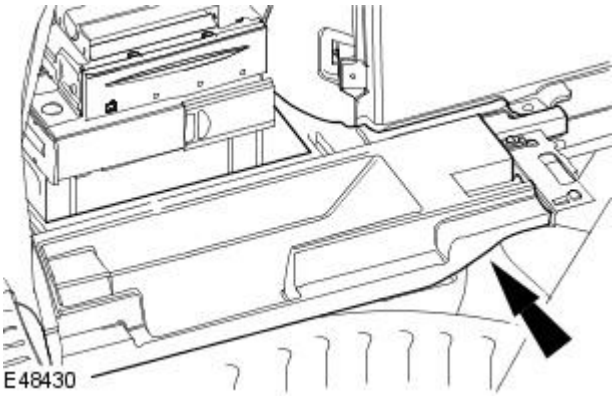

10. Remove the left-hand loadspace stowage compartment.

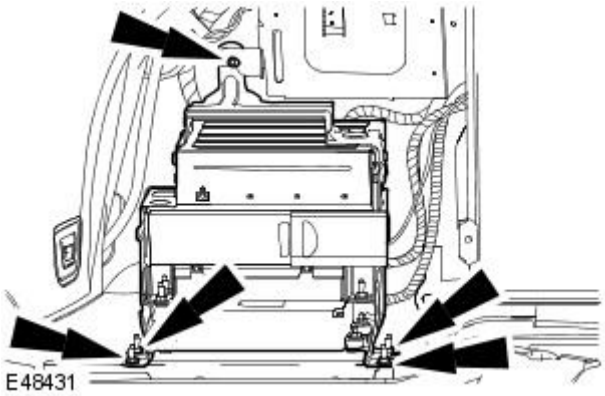

11. Detach the module retaining bracket.

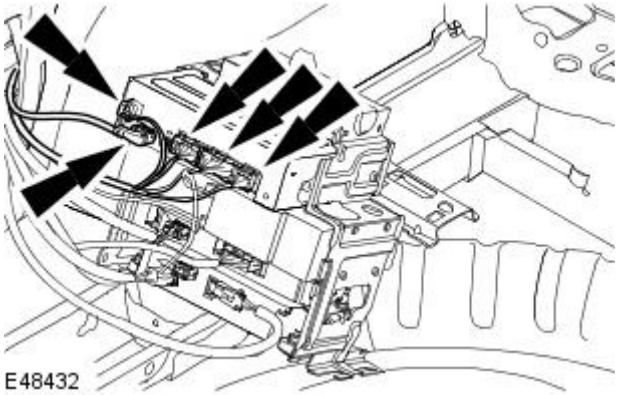

12. Disconnect the navigation system module electrical connectors.

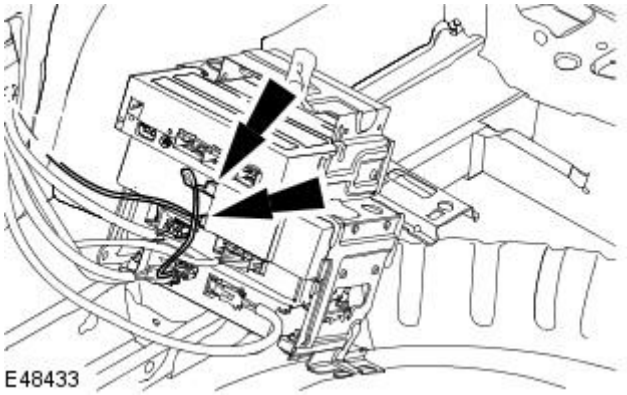

13. Disconnect the compact disc (CD) changer electrical connectors.

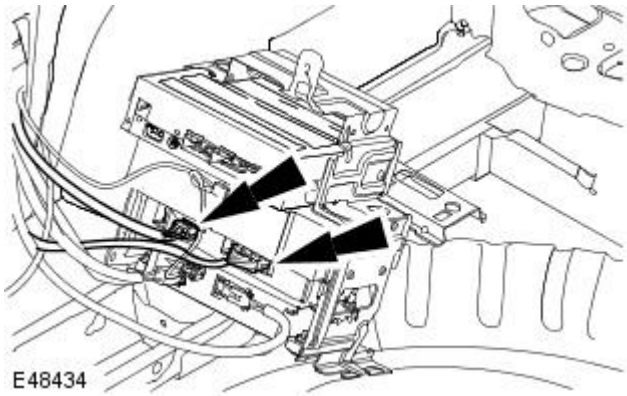

14. Disconnect the multifunction voice activated module electrical connectors.

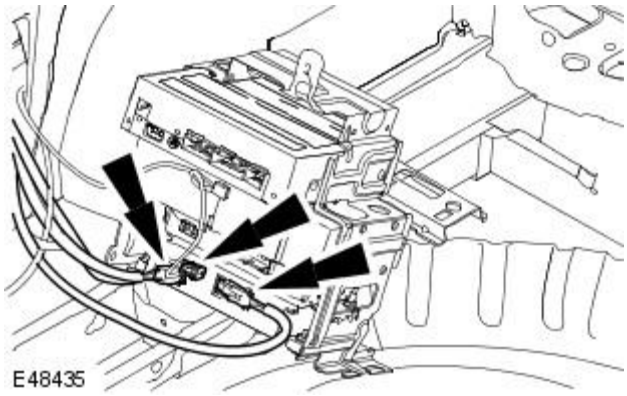

15. Disconnect the cellular phone module electrical connectors.

16. Remove the CD player retaining bolts.

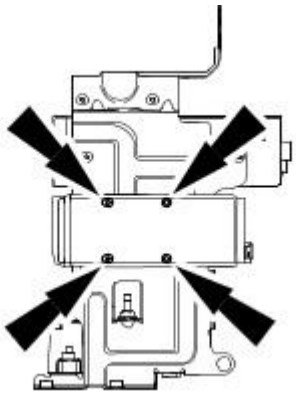

E48436

17. Remove the CD player.

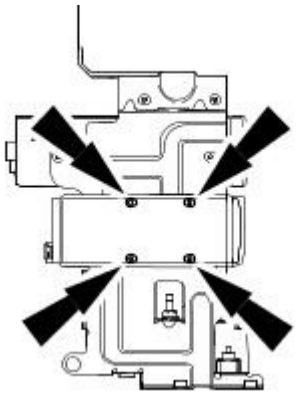

E48437

Installation

1. To install, reverse the removal procedure.

- Tighten to 1 Nm.

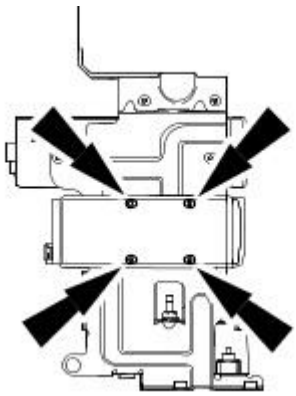

E48437

2. Tighten to 1 Nm.

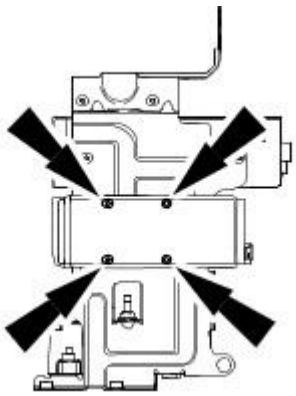

E48436

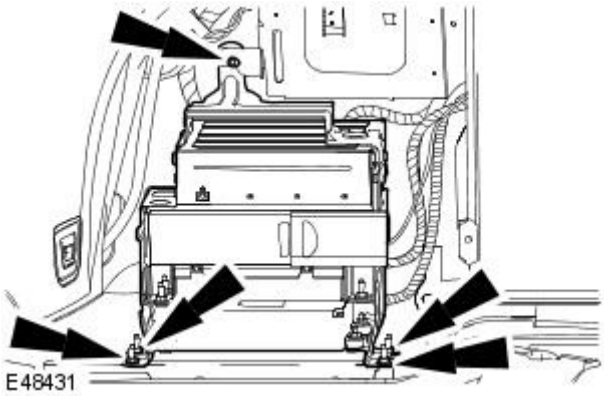

3. Tighten the module retaining bracket upper and lower fixings.

- Tighten the lower retaining nuts to 4 Nm.
- Tighten the upper retaining bolt to 9 Nm.

4. Connect the battery ground cable
For additional information, refer to: Battery Connect (414-01 Battery, Mounting and Cables, General Procedures).

Audio Unit - Steering Wheel Audio Controls

Removal and Installation

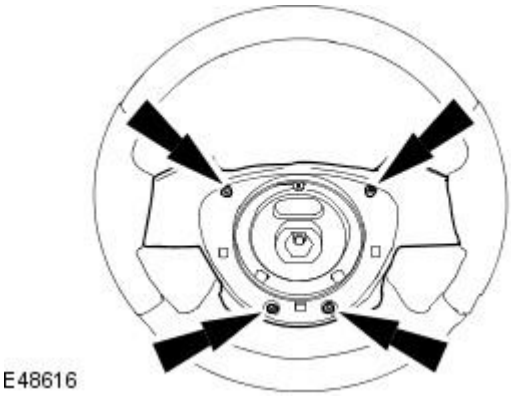

1. Remove the steering wheel.
   For additional information, refer to: Steering Wheel (211-04 Steering Column, Removal and Installation).
2. Remove the steering wheel finisher trim panel.

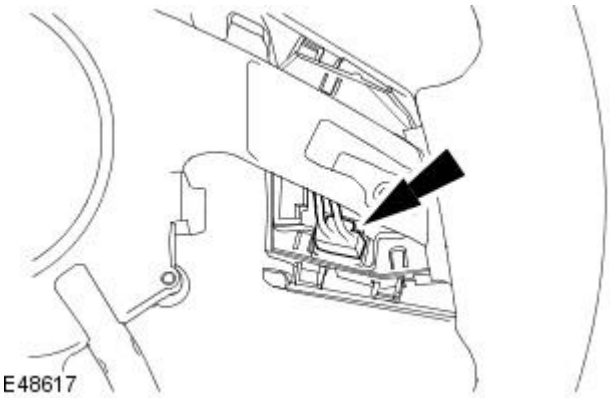

3. Disconnect the electrical connector.

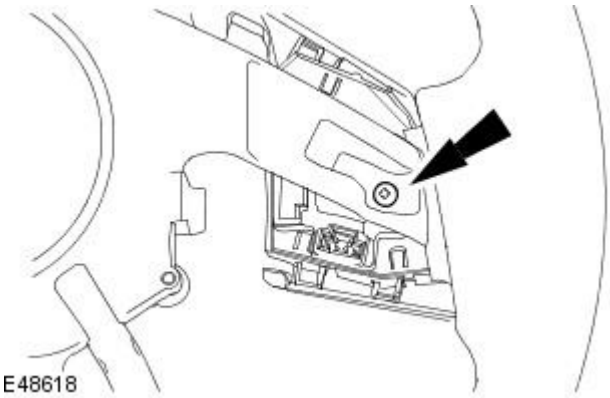

4. Remove the steering wheel audio controls.

Installation

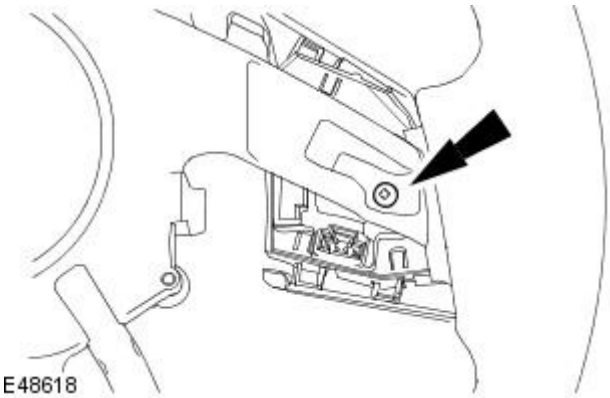

1. To install, reverse the removal procedure.
   - Tighten to 4 Nm.

Published: 11-May-2011

Antenna -

Torque Specifications

Description	Nm	lb-ft	lb-in
Module retaining bolt - 4 Door	9	–	80
Antenna retaining nut - Wagon	7	–	62

Antenna - Antenna

Description and Operation

ANTENNA - 4 DOOR

Item	Part Number	Description
1	—	Roof pod antenna module (vehicles from 2009MY)
2	—	FM antenna
3	—	AM Antenna
4	-	Digital Audio Broadcast (DAB)/Vehicle Information and Communication System (VICS - Japan only) antenna
5	-	TV antenna
6	-	DAB/VICS antenna amplifier
7	-	AM/FM antenna amplifier

4-Door - Vehicles up to 2009MY

The audio unit to antenna module cable is located in the body wiring harness. The antenna module to antenna cable is located along the C-pillar.

There are two antennas fitted to the vehicle, an AM antenna and an FM antenna, both located in the rear windshield glass.

4 Door - Vehicles from 2009MY

Vehicles from 2009MY are fitted with a roof pod antenna module. The module is secured to the vehicle roof panel with 2 lock nuts and washers screwed onto captive studs in the module. The module can contain the following antennae dependant on the vehicle equipment specification:

- DAB antenna only
- GPS (global positioning system) antenna only
- DAB and GPS antennae.

• NOTE: On vehicles not fitted with DAB or GPS an empty module is fitted.

The DAB system uses the antenna in the roof pod antenna module and also the rear window heater elements for DAB reception. The antenna module receives L band signals which are passed directly to the DAB module in the luggage compartment. The rear window elements receive band 3 signals. The band 3 signals received by the rear window elements are passed through a DAB antenna amplifier before being passed to the DAB module located in the luggage compartment. The DAB antenna amplifier is located on the RH (right-hand) 'C' pillar adjacent to the rear window. The amplifier is connected to the rear screen elements by a connector which attaches to the uppermost press stud on the RH of the rear screen

The AM/FM signals are received by elements in the rear window. The AM signals are received by elements located mainly in the upper LH (left-hand) side of the rear window. The FM signals are received by elements across the whole of the rear window. The received signals are passed through an AM/FM antenna amplifier before being passed to the audio unit. The AM/FM antenna amplifier is located on the LH 'C' pillar adjacent to the rear window. The amplifier is connected to the rear screen elements by a connector which attaches to press studs on the rear screen elements. The rear window elements also incorporate reception for TV signals where a TV system is fitted.

ANTENNA - WAGON

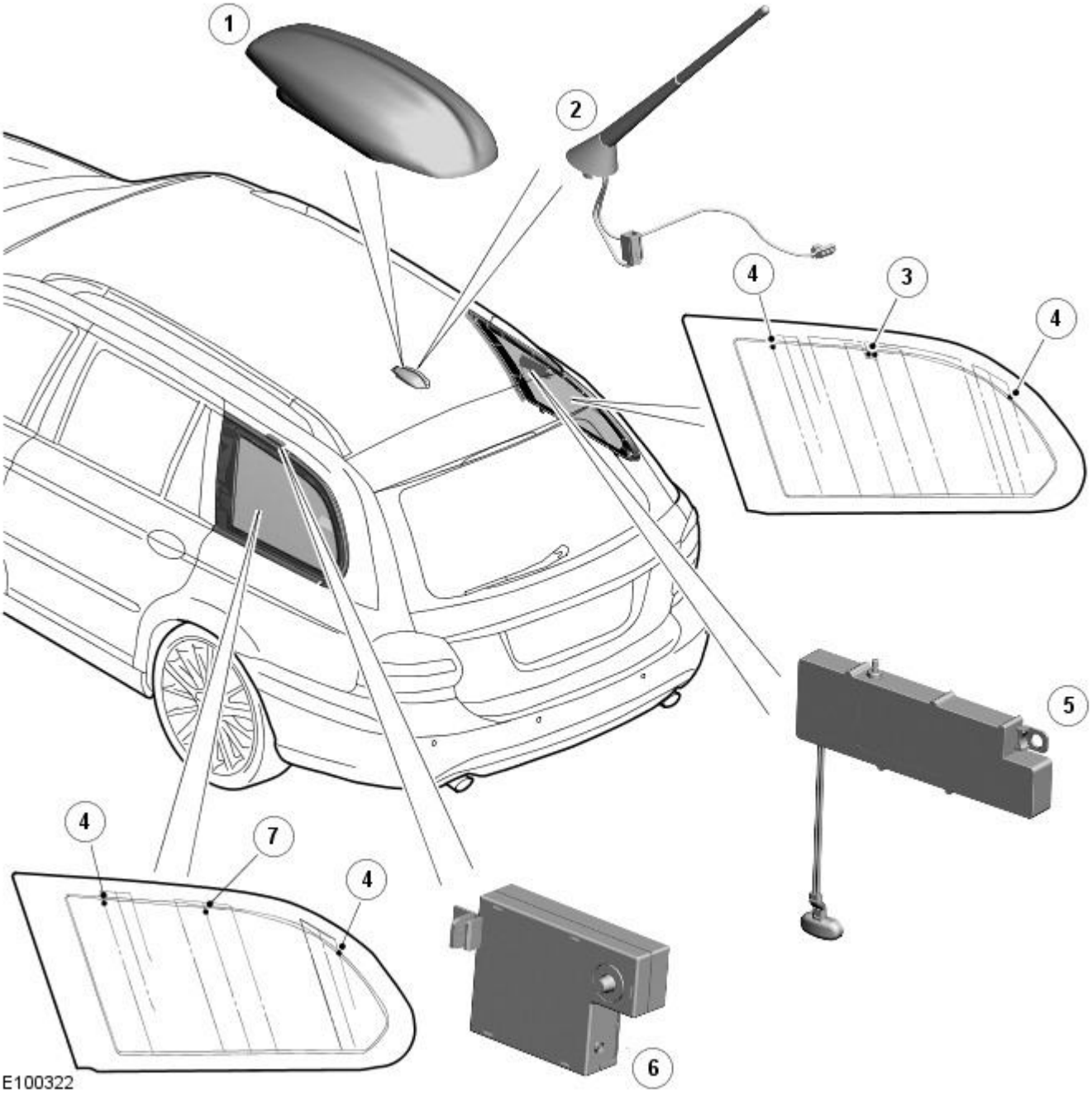

Item	Part Number	Description
1	-	Roof pod antenna module (vehicles from 2009MY)
2	-	Antenna assembly (vehicles up to 2009MY)
3	-	AM/FM antenna
4	-	Television (TV) antenna
5	-	AM/FM antenna amplifier
6	-	DAB/VICS antenna amplifier
7	-	DAB/VICS (Japan only) antenna

Wagon - Vehicles up to 2009MY

The antenna assembly is mounted at the rear of the roof panel, and incorporates the AM, FM and Cellular Phone functions.

The antenna is available in two versions:

- AM, FM and Cellular Phone.
- AM and FM only.

All vehicles with the pre-installed cellular phone wiring are fitted with the AM/FM and cellular phone antenna as standard.

Access to the antenna assembly fixing nut can only be gained by lowering the headliner.

Wagon - Vehicles from 2009MY

Vehicles from 2009MY are fitted with a roof pod antenna module. The module is secured to the vehicle roof panel with 2 lock nuts and washers screwed onto captive studs in the module. The module can contain the following antennae dependant on the vehicle equipment specification:

- DAB antenna only
- GPS antenna only
- DAB and GPS antennae.

• NOTE: On vehicles not fitted with DAB or GPS an empty module is fitted.

The DAB system uses the antenna in the roof pod antenna module and also elements in the LH rear side window for DAB reception. The antenna module receives L band signals which are passed directly to the DAB module in the luggage compartment. The side window elements receive band 3 signals. The band 3 signals received by the side window elements are passed through a DAB antenna amplifier before being passed to the DAB module located in the luggage compartment. The DAB antenna amplifier is located on the body above the side window. The amplifier is connected to the elements by a connector which attaches to the center press stud on the LH side window elements. The LH side window also incorporates elements for the TV system if fitted.

The AM/FM signals are received by elements in the RH rear side window. The AM/FM signals are received by the elements located centrally in the side window. The received signals are passed through an AM/FM antenna amplifier before being passed to the audio unit. The AM/FM antenna amplifier is located on the body above the side window. The amplifier is connected to the elements by a connector which attaches to press studs on the side window elements. The RH side window also incorporates elements for the TV system if fitted.

Published: 11-May-2011

Antenna - Antenna

Diagnosis and Testing

Inspection and Verification

1. **1.** Verify the customer concern.
2. **2.** Visually inspect for obvious signs of electrical damage.

Visual Inspection Chart

Electrical
• Module • FM anntena • AM antenna • Wiring harness for damage or corrosion • Electrical connector(s)

3. **3.** If an obvious cause for an observed or reported concern is found, correct the cause (if possible) before proceeding to the next step.
4. **4.** If the cause is not visually evident, verify the symptom and refer to the Jaguar Approved Diagnostic System.

Antenna - AntennaWagon

Removal and Installation

Removal

1. Remove the overhead console.
   For additional information, refer to: Overhead Console (501-12 Instrument Panel and Console, Removal and Installation).
2. Remove the both sun visors.
   For additional information, refer to: Sun Visor (501-05 Interior Trim and Ornamentation, Removal and Installation).
3. Remove the sun visor retaining clips.

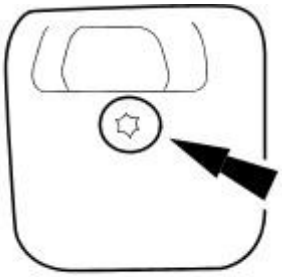

VUJ0003728

4. NOTE: Right-hand shown, left-hand similar.

   Detach the front door opening weatherstrip.

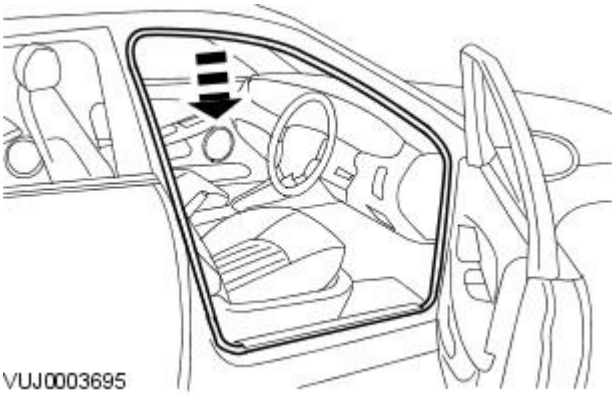

VUJ0003695

5. Remove both A-pillar trim panels.
   For additional information, refer to: A-Pillar Trim Panel (501-05 Interior Trim and Ornamentation, Removal and Installation).
6. NOTE: Right-hand shown, left-hand similar.

   Detach the B-pillar upper trim panel.

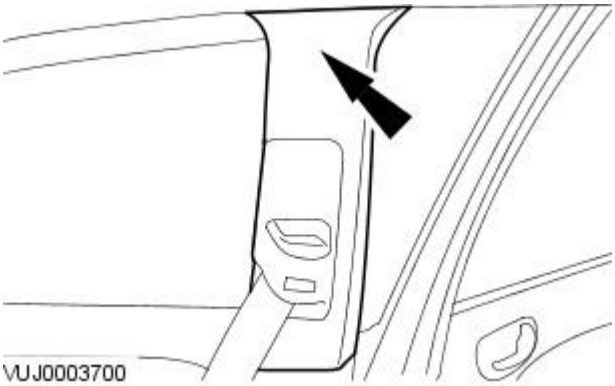

VUJ0003700

7. NOTE: Right-hand shown, left-hand similar.

   Detach the B-pillar lower trim panel.

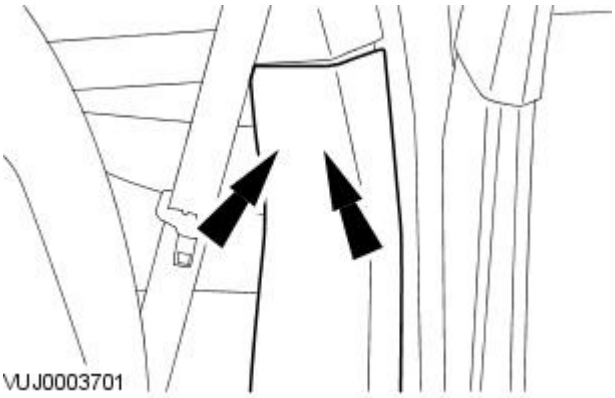

VUJ0003701

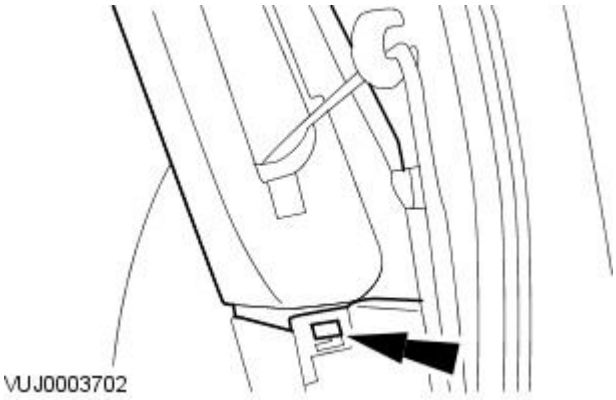

8. NOTE: Right-hand shown, left-hand similar.

Detach the B-pillar upper trim panel from the B-pillar trim lower trim panel.

9. Remove both C-pillar trim panel.
For additional information, refer to: C-Pillar Trim Panel - Wagon (501-05 Interior Trim and Ornamentation, Removal and Installation).

10. Detach the covers to expose the screws and remove the driver and passenger assist handles.

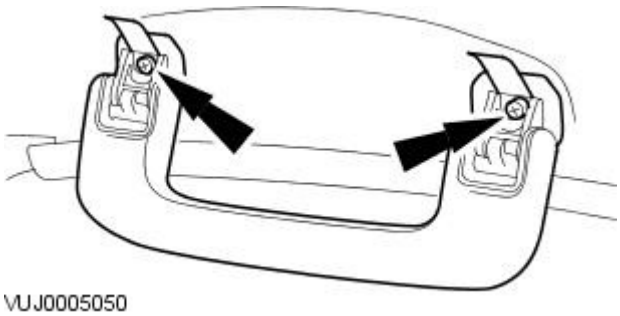

11. Remove both D-pillar trim panels.
For additional information, refer to: D-Pillar Trim Panel (501-05 Interior Trim and Ornamentation, Removal and Installation).

12. NOTE: Right-hand shown, left-hand similar.

Remove the luggage net retaining clip.

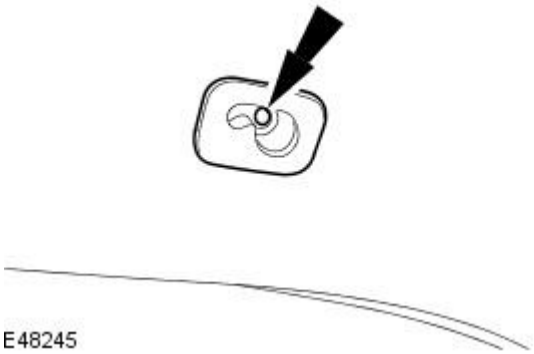

13. NOTE: The liftgate weatherstrip must be replaced once removed.

Remove and discard the liftgate opening weatherstrip.

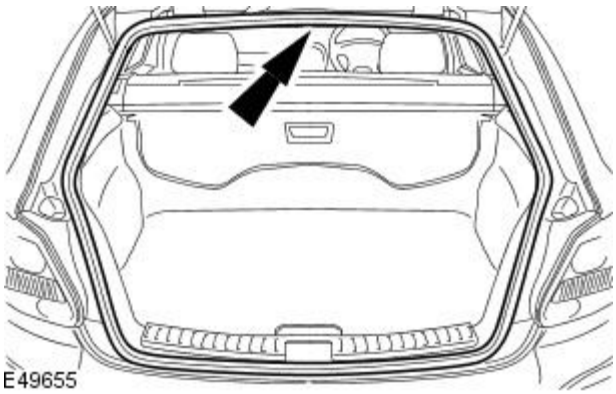

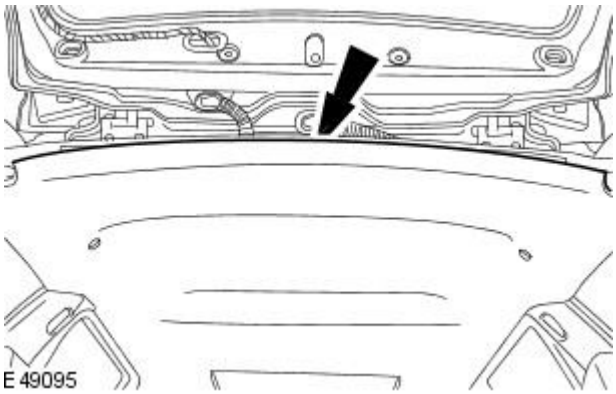

14. Detach the headliner.

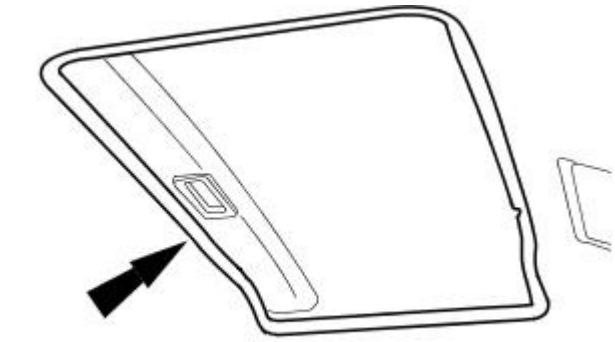

15. CAUTION: The headliner must not be creased or folded during removal or installation. Failure to follow this instruction may result in damage to the component.

Lower the headliner.

- Remove the sunroof opening panel weatherstrip.

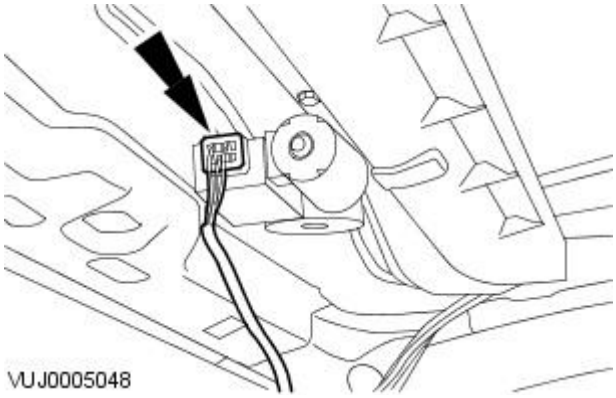

16. Disconnect the sunroof motor electrical connector.

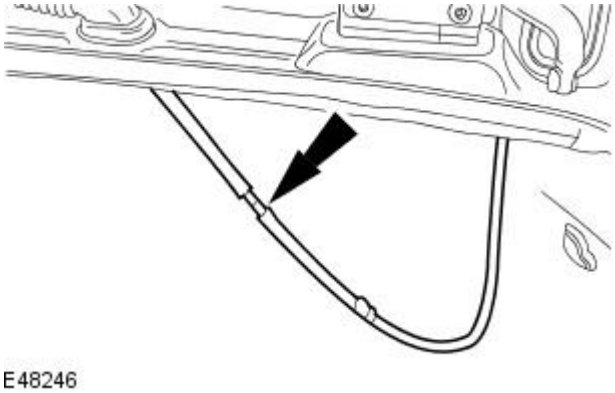

17. Disconnect the rear washer hose connector.

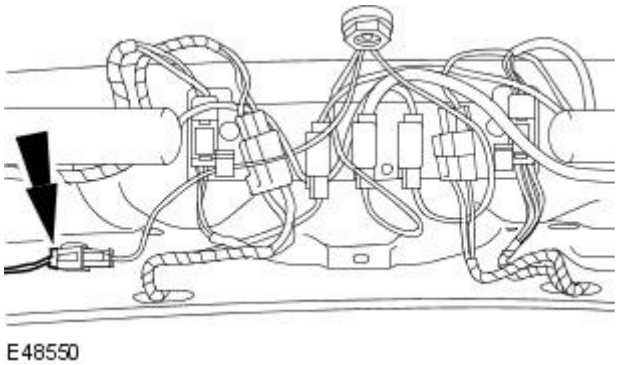

18. Disconnect the electrical connector.

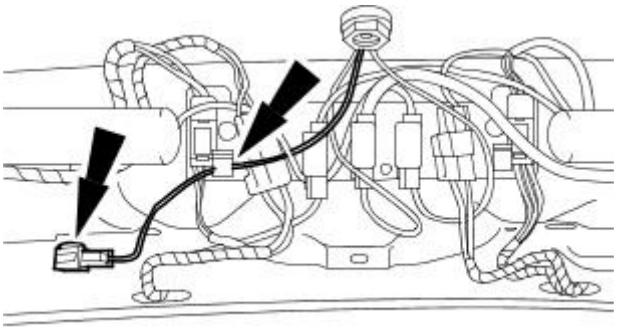

E48551

19. Detach the antenna harness.

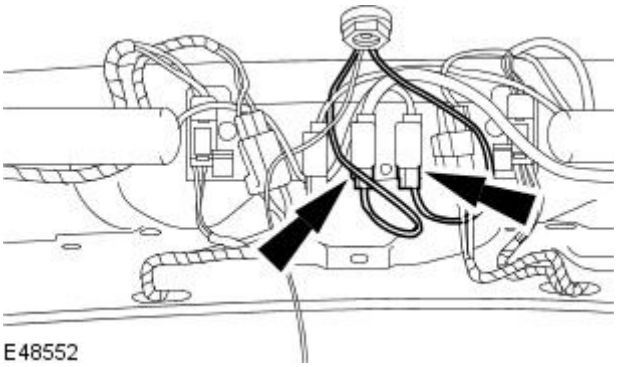

E48552

20. Disconnect the electrical connectors.

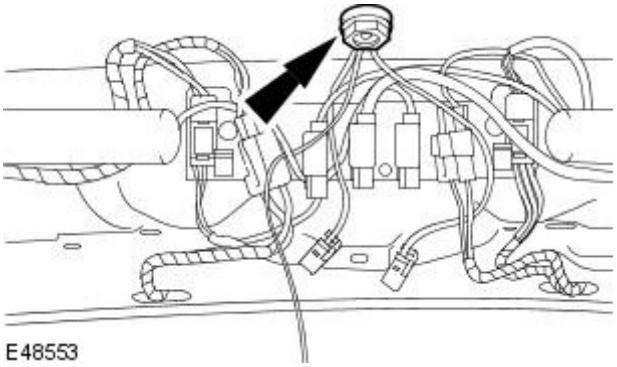

E48553

21. Remove the antenna.

Installation

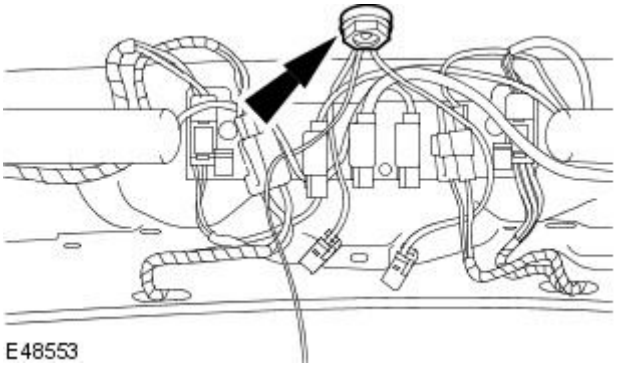

E48553

1. To install, reverse the removal procedure.

- Tighten to 7 Nm.

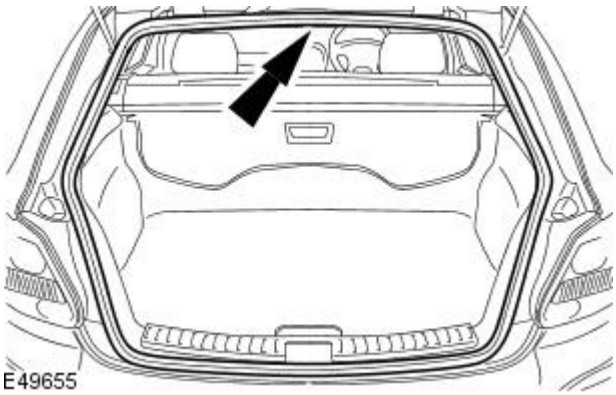

E49655

2. NOTE: The liftgate weatherstrip must be replaced once removed.

Install a new liftgate opening weatherstrip.

Antenna - Module

Removal and Installation

Removal

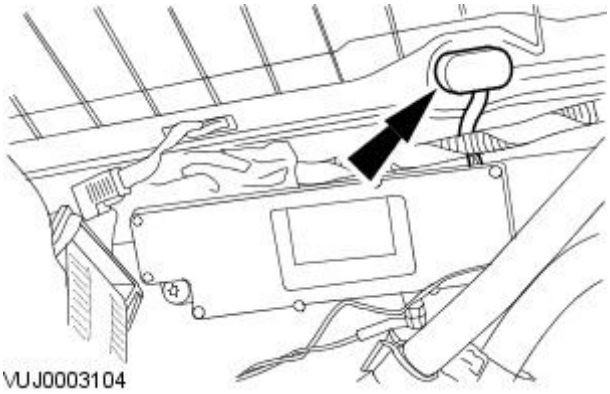

1. Remove the C-pillar trim. For additional information, refer toSection 501-05 Interior Trim and Ornamentation.
2. Disconnect the antenna cable electrical connector.

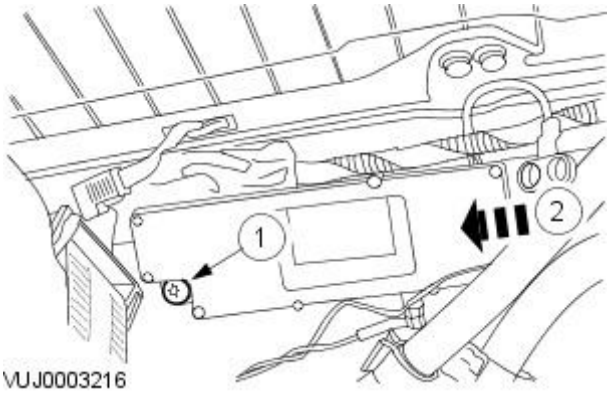

3. Detach the module.
   1. Remove the module retaining bolt.
   2. Detach the module.

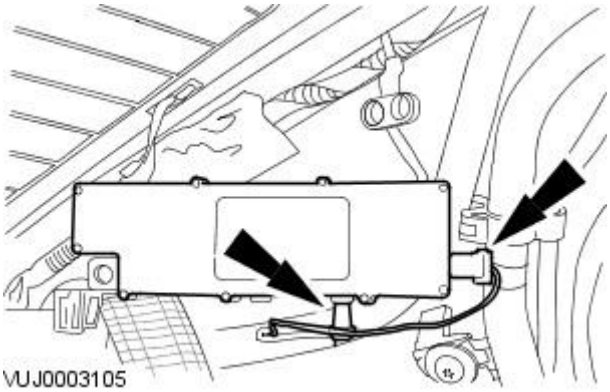

4. Remove the module.
   - Disconnect the module electrical connectors.

Installation

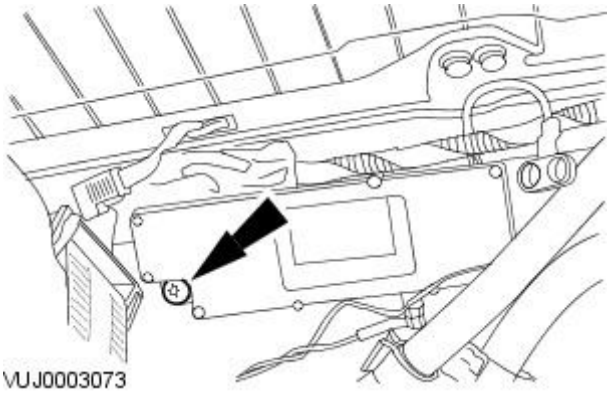

1. To install, reverse the removal procedure.
   - Tighten to 9 Nm.

Published: 11-May-2011

Speakers - Speakers

Description and Operation

All Vehicles

Optimum acoustic detail is achieved through mounting the speakers high on each door panel.

The premium sound system speakers are powered by a separate, remote amplifier.
For additional information, refer to: Audio System (415-01 Audio Unit, Description and Operation).

The standard sound system speakers are powered by the audio unit.

4-Door

The standard sound system comprises six speakers, two mid/bass and two tweeters in the front doors, and two full range speakers in the rear doors.

The premium sound system comprises ten speakers:

- Four high power and high quality speakers mounted in each door.
- Four door mounted tweeters.
- Two sub-woofers mounted beneath the rear parcel shelf.

Wagon

The standard sound system on wagon comprises six speakers, two mid/bass and two tweeters in the front doors, and two full range speakers in the rear doors.

The premium sound system comprises nine speakers:

- Four high power and high quality speakers mounted in each door.
- Four door mounted tweeters.
- An enclosed sub-woofer mounted behind the right-hand loadspace trim.

Published: 11-May-2011

Speakers - Speakers

Diagnosis and Testing

Inspection and Verification

1. **1.** Verify the customer concern.
2. **2.** Visually inspect for obvious signs of electrical damage.

Visual Inspection Chart

Electrical
• Wiring for damage and corrosion • Electrical connectors • Speakers for damage or deterioration • Rear speaker amplifier

3. **3.** If an obvious cause for an observed or reported concern is found, correct the cause (if possible) before proceeding to the next step.
4. **4.** If the cause is not visually evident, verify the symptom and refer to the Jaguar Approved Diagnostic System.

Published: 11-May-2011

Speakers - Front Door Speaker

Removal and Installation

Removal

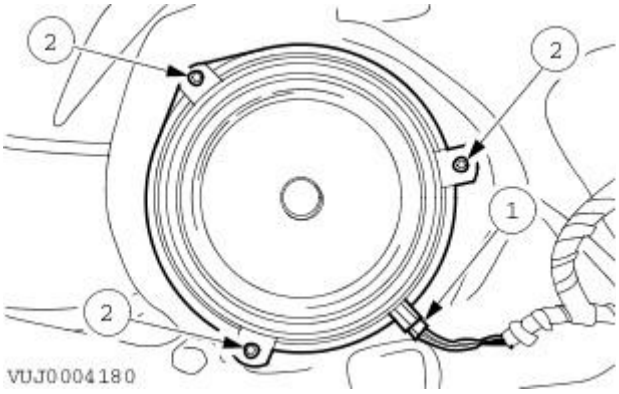

1. Remove the door trim panel. For additional information, refer to Section 501-05 Interior Trim and Ornamentation.

2. Remove the front speaker.

1. Disconnect the electrical connector.
2. Remove the front speaker.

Installation

1. To install, reverse the removal procedure.

Speakers - Front Door Tweeter Speaker

Removal and Installation

Removal

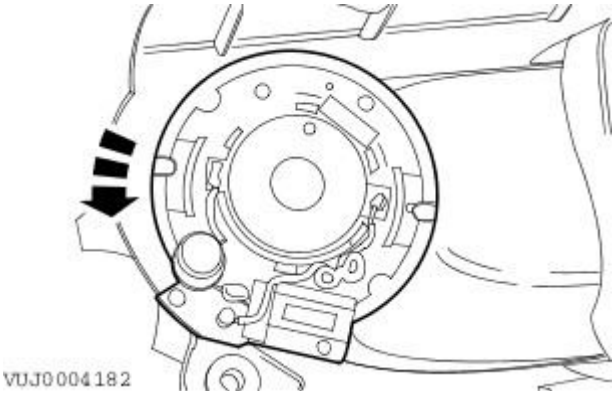

1. Remove the door trim panel. For additional information, refer to Section 501-05 Interior Trim and Ornamentation.
2. Remove the front tweeter speaker.

Installation

1. To install, reverse the removal procedure.

Speakers - Parcel Shelf Speaker

Removal and Installation

1. Remove the parcel shelf.
   For additional information, refer to: Parcel Shelf (501-05 Interior Trim and Ornamentation, Removal and Installation).
2. Disconnect the electrical connector.

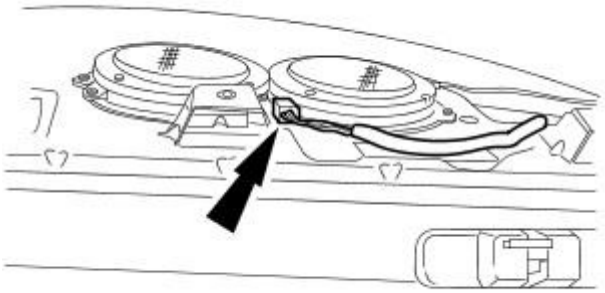

E49414

3. Remove the parcel shelf speaker.

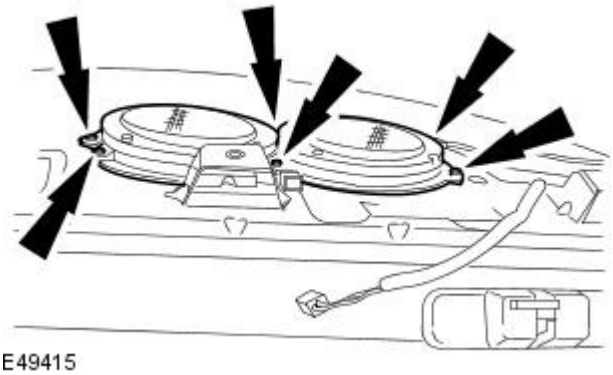

E49415

Installation

1. To install, reverse the removal procedure.

Speakers - Rear Door Speaker

Removal and Installation

Removal

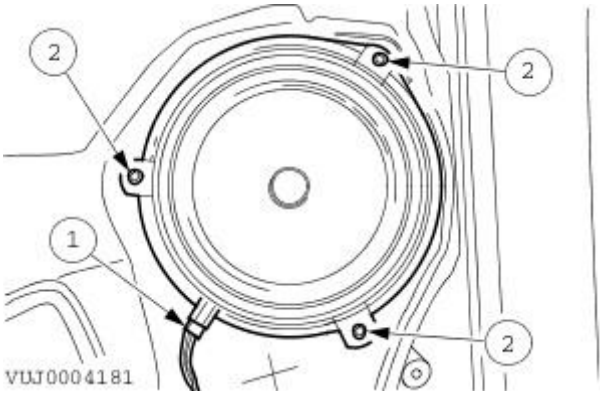

1. Remove the door trim panel. For additional information, refer to Section 501-05 Interior Trim and Ornamentation.
2. Remove the rear speaker.
    1. Disconnect the electrical connector.
    2. Remove the rear speaker.

Installation

1. To install, reverse the removal procedure.

Speakers - Rear Door Tweeter Speaker

Removal and Installation

Removal

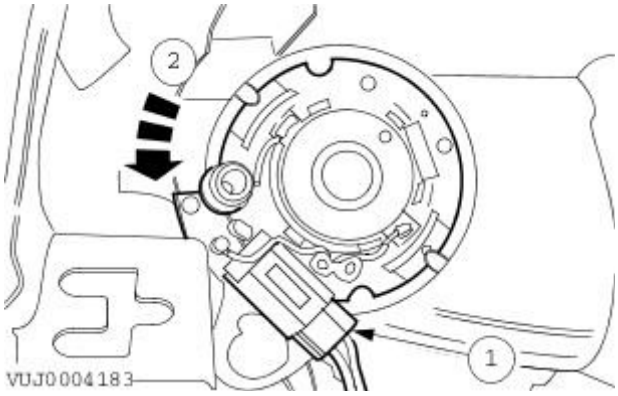

1. Remove the door trim panel. For additional information, refer to Section 501-05 Interior Trim and Ornamentation.
2. Remove the rear tweeter speaker.
    1. Disconnect the electrical connector.
    2. Remove the rear tweeter speaker.

Installation

1. To install, reverse the removal procedure.

Exterior Lighting -

General Specifications

Item	Specification
Front turn signal lamp bulb	PY21W
Front fog lamp bulb	H1-55W
Parking/Side lamp bulb	W5W
Low beam lamp bulb	H1-55W
High beam lamp bulb	H1-55W
High intensity discharge (HID) lamp bulb	D2s-35W
Rear turn signal lamp bulb	PY21W
Rear fog lamp bulb	P21W
Stoplamp/rear lamp bulb	P21/5W
Rear lamp bulb	P21/5W
Reversing lamp bulb	P21W
Side repeater lamp bulb	W5W
Side marker lamp bulb	W5W

Exterior Lighting - Exterior Lighting

Description and Operation

The headlamp switch is located on the driver side of the instrument panel. It also operates the sidelamps, fog lamps, "Auto Mode", headlamp levelling and the trip switch.

Each headlamp assembly consists of two lamps. The side lamp and the high beam lamp are the inner and the low beam and turn signal lamp are the outer. Access for bulb replacement is from the engine compartment.

High intensity discharge (HID) lighting is fitted as an option.

WARNING: Voltages of up to 25 KV are possible with HID lighting.

Burner wear for HID lamps is so low that the burner lasts the lifetime of the vehicle under normal use. The HID bulbs are dealer replaceable only.

• NOTE: After replacement of a sensor or module the HID lamps will need to be calibrated using a Jaguar Approved Diagnostic System.

The front fog lamps are located in recesses in the front bumper. The two retaining screws are located behind the splitter vane and are accessible after removing the radiator splash shield.

The license plate lamp bulbs on all vehicles can be accessed by releasing the retaining tangs on the side of the lamps.

Each rear lamp assembly incorporates a stop/tail lamp, a fog lamp, a reversing lamp and a turn signal lamp. Access for bulb replacement is from the luggage compartment.

The high mounted stop lamps for both 4-door vehicles and wagon are replaceable as units. On 4-door vehicles, the two retaining screws are located behind the headliner and are accessible after the headliner has been removed. On wagon, the three retaining screws are located below the tailgate spoiler, and are accessible after the tailgate spoiler has been removed.

On vehicles up to 2009MY, the side repeater lamps are located in the front fender. On vehicles from 2009MY, the side repeater lamps are located in the door mirrors.

The side marker lamps on 4-door vehicles are located in the front bumper and rear bumper cover. These are located in each bumper cover by tangs on one side of the unit and held in position by a spring clip on the other side. The rear side marker lamps on wagon are incorporated in to each rear lamp assembly.

Exterior Lighting - Headlamps

Diagnosis and Testing

Principle of Operation

For a detailed description of the lighting system, refer to the relevant Description and Operation sections in the workshop manual. REFER to: Exterior Lighting (417-01 Exterior Lighting, Description and Operation).

Inspection and Verification

1. **1.** Verify the customer concern.
2. **2.** Visually inspect for obvious signs of mechanical or electrical damage.

Visual Inspection Chart

Mechanical	Electrical
• Switch • Headlamp levelling motor • Levelling sensors • Relay(s)	• Wiring harness for damage or corrosion • Electrical connector(s) • Bulb(s) • Fuse(s) • Control module

3. **3.** If an obvious cause for an observed or reported concern is found, correct the cause (if possible) before proceeding to the next step.
4. **4.** If the cause is not visually evident, verify the symptom and refer to the Jaguar Approved Diagnostic System.

DTC Index

WARNING: Voltages of up to 25 KV are possible with HID lighting

• CAUTIONS:

Observe all recommended safety precautions relating to the operation and repair of headlamp systems. Refer to health and safety guidance in the owner guide and repair manual for further details.

When probing connectors to take measurements in the course of the pinpoint tests, use the adaptor kit, part number 3548-1358-00

• NOTE: If the control module/component is suspect and the vehicle remains under manufacturer warranty, refer to the Warranty Policy and Procedures manual (section B1.2), or determine if any prior approval program is in operation, prior to the installation of a new module/component.

• NOTE: When performing voltage or resistance tests, always use a digital multimeter (DMM) accurate to three decimal places and with a current calibration certificate. When testing resistance, always take the resistance of the DMM leads into account.

• NOTE: Check and rectify basic faults before beginning diagnostic routines that involve pinpoint tests.

• NOTE: Inspect connectors for signs of water ingress, and pins for damage and/or corrosion.

• NOTE: If DTCs are recorded and, after performing the pinpoint tests, a fault is not present, an intermittent concern may be the cause. Always check for loose connections and corroded terminals.

DTC	Description	Possible Cause	Action
B1318	Battery voltage low	• Charging system fault • Wiring harness concern	Battery voltage low, check charging system for faults. Charge level is controlled by engine control module.
B1342	ECU is faulted	• Auto levelling ECU internal error	Detectable internal defect (RAM/EEPROM error), check module for external connection problems, replace module as required.
B2477	Module configuration failure	• Control module not configured	Configure control module using manufacturer approved diagnostic system
B2608	ECU output to left headlamp stepper motor short to ground	• Wiring harness concern	Refer to electrical circuit diagrams, check left headlamp stepper motor circuit for short to ground. Repair wiring harness using approved methods and materials. Clear DTC and retest system to ensure correct operation.
B2609	ECU output to left headlamp stepper motor circuit failure	• Wiring harness concern	Refer to electrical circuit diagrams, check left headlamp stepper motor circuit open circuit or short to power. Repair wiring harness using approved methods and materials. Clear DTC and retest system to ensure correct operation.
B2610	ECU output driver to left headlamp stepper motor overtemperature	• Headlamp fault	Check headlamp unit for blocking of stepper motor movement, or continuous operation. Replace headlamp components as required. Clear DTC and retest system to ensure correct operation
B2611	ECU output to right headlamp stepper motor short to ground	• Wiring harness concern	Refer to electrical circuit diagrams, check right headlamp stepper motor circuit for short to ground. Repair wiring harness using approved methods and materials. Clear DTC and retest system to ensure correct operation.
B2612	ECU output to right headlamp stepper motor circuit failure	• Wiring harness concern	Refer to electrical circuit diagrams, check left headlamp stepper motor circuit open circuit or short to power. Repair wiring harness using approved methods and materials. Clear DTC and retest system to ensure correct operation.
B2613	ECU output driver to right headlamp stepper motor overtemperature	• Headlamp fault	Check headlamp unit for blocking of stepper motor movement, or continuous operation. Replace headlamp components as required. Clear DTC and retest system to ensure correct operation
B2614	Front or rear axle vehicle level sensor supply short to ground	• Wiring harness concern	Refer to electrical circuit diagrams, check level sensor power supply circuit for short to ground. Repair wiring harness using approved methods and materials. Clear DTC and retest system to ensure correct operation.

DTC	Description	Possible Cause	Action
B2615	Front or rear axle vehicle level sensor supply circuit failure	• Wiring harness concern	Refer to electrical circuit diagrams, check level sensor power supply circuit for short to power. Repair wiring harness using approved methods and materials. Clear DTC and retest system to ensure correct operation.
B2616	Front axle vehicle level sensor signal circuit failure	• Wiring harness concern	Refer to electrical circuit diagrams, check level sensor signal circuit for open circuit, short to 5 volts, short to battery power. Repair wiring harness using approved methods and materials. Clear DTC and retest system to ensure correct operation.
B2617	Front axle vehicle level sensor signal short to ground	• Wiring harness concern	Refer to electrical circuit diagrams, check front level sensor signal circuit for short to ground. Repair wiring harness using approved methods and materials. Clear DTC and retest system to ensure correct operation.
B2618	Front axle vehicle level sensor signal not plausible	• Sensor fault/adjustment • wiring harness concern	Front sensor signal out of range. Check lever position and adjustment of sensor. Replace sensor if signal cannot be brought into range. Refer to electrical circuit diagrams, check level sensor signal circuit for faults. Repair wiring harness using approved methods and materials. Clear DTC and retest system to ensure correct operation.
B2619	Rear axle vehicle level sensor signal circuit failure	• Wiring harness concern	Refer to electrical circuit diagrams, check level sensor signal circuit for open circuit, short to 5 volts, short to battery power. Repair wiring harness using approved methods and materials. Clear DTC and retest system to ensure correct operation.
B2620	Rear axle vehicle level sensor signal short to ground	• Wiring harness concern	Refer to electrical circuit diagrams, check rear level sensor signal circuit for short to ground. Repair wiring harness using approved methods and materials. Clear DTC and retest system to ensure correct operation.
B2621	Rear axle vehicle level sensor signal not plausible	• Sensor fault/adjustment • wiring harness concern	Rear sensor signal out of range. Check lever position and adjustment of sensor. Replace sensor if signal cannot be brought into range. Refer to electrical circuit diagrams, check level sensor signal circuit for faults. Repair wiring harness using approved methods and materials. Clear DTC and retest system to ensure correct operation.
B2622	Auto levelling ECU speed message invalid / not available	• CAN message invalid or not available • wiring harness concern	Refer to electrical circuit diagrams, check CAN circuits for faults. Repair wiring harness using approved methods and materials. Clear DTC and retest system to ensure correct operation.
B2623	Auto levelling ECU low beam message invalid / not available	• CAN message invalid or not available • wiring harness concern	Refer to electrical circuit diagrams, check CAN circuits for faults. Repair wiring harness using approved methods and materials. Clear DTC and retest system to ensure correct operation.
B2624	Auto levelling ECU speed signal not available	• speed signal circuit malfunction • wiring harness concern	Refer to electrical circuit diagrams, check CAN circuits for faults. Repair wiring harness using approved methods and materials. Clear DTC and retest system to ensure correct operation.
B2625	Auto levelling ECU low beam signal input open circuit	• Wiring harness concern	Refer to electrical circuit diagrams, check ECU low beam input circuits for open circuits. Repair wiring harness using approved methods and materials. Clear DTC and retest system to ensure correct operation.
B2626	Auto levelling ECU not calibrated	• ECU not calibrated or adjusted	Calibrate and adjust the headlamp levelling ECU using the manufacturer approved diagnostic system. Clear DTC and retest system to confirm correct operation

Exterior Lighting - Headlamp Adjustment

General Procedures

1. NOTE: Headlamp adjustment should be made at room temperature.

Prepare the vehicle for headlamp adjustment.

1. Place the vehicle on a level surface.
2. Before adjusting the headlamps, check for faulty lenses, reflectors and blackened bulbs. Install new components as necessary.
3. Check the tire pressures and correct as necessary. For additional information, refer to Section 204-04 Wheels and Tires.
4. The vehicle must be at normal weight.
5. Normalize the suspension.

2. Rotate the headlamp adjustment switch to the 'O' position.

VUJ0003066

3. Adjust the headlamp using the adjustment bolts.

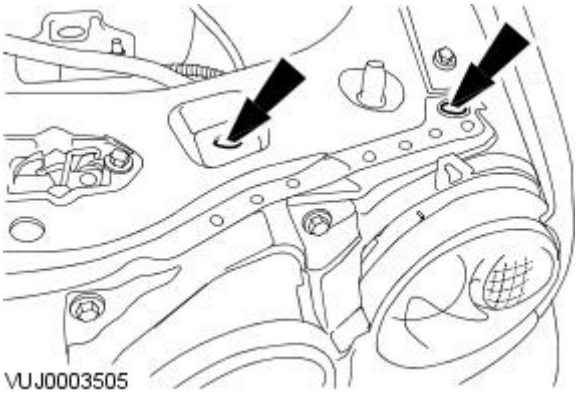

VUJ0003505

Exterior Lighting - Ballast

Removal and Installation

Removal

1. Remove the headlamp assembly.
   For additional information, refer to Headlamp Assembly - in this section.
2. Remove the bulb cover.

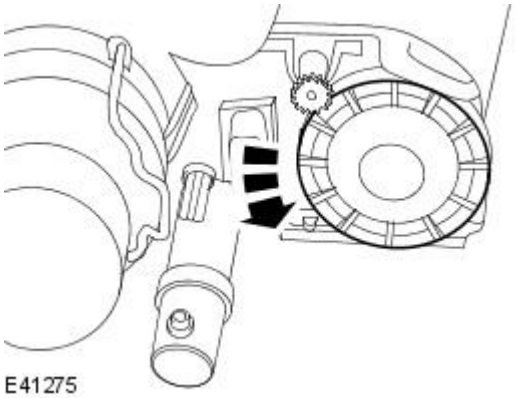

3. Disconnect the ballast module electrical connector.

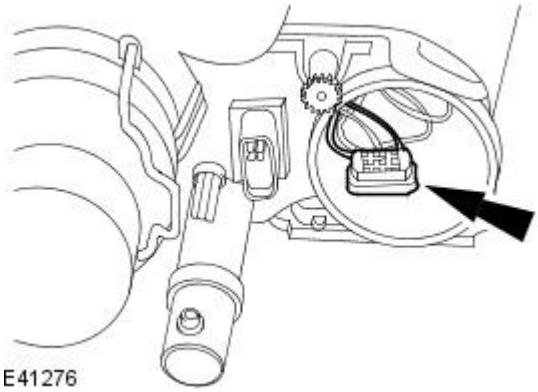

4. Remove the ballast module.

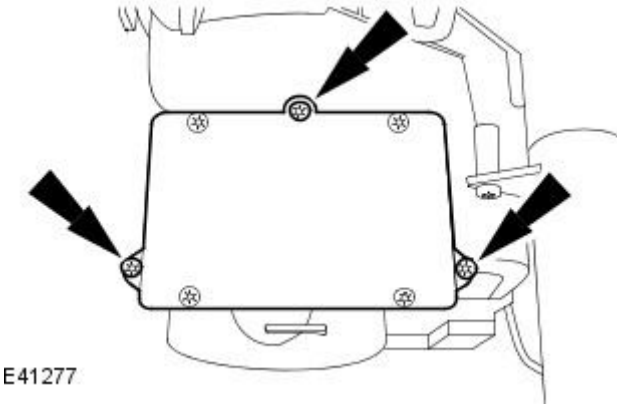

Installation

1. To install, reverse the removal procedure.

Exterior Lighting - Front Fog Lamp

Removal and Installation

Removal

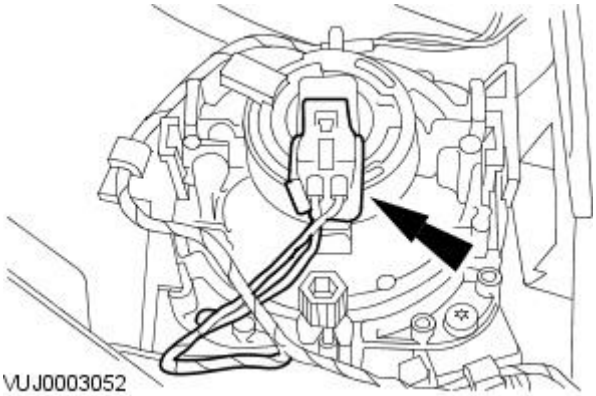

1. Remove the radiator splash shield. For additional information, refer toSection 501-02 Front End Body Panels.
2. Disconnect the fog lamp electrical connector.

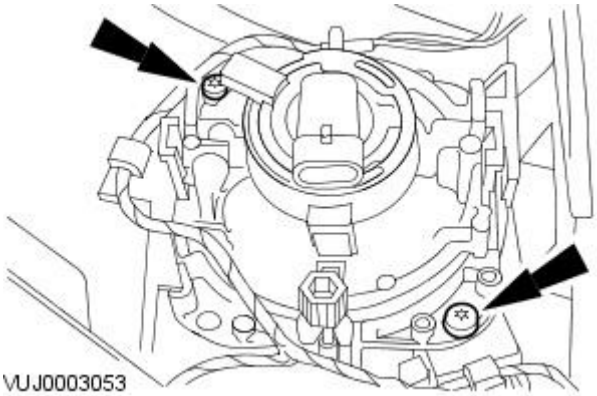

3. Remove the fog lamp retaining screws.

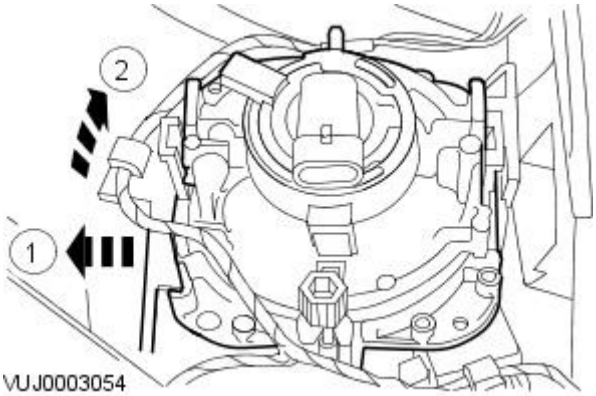

4. Remove the fog lamp.
    1. Release the fog lamp retaining tang.
    2. Remove the fog lamp.

Installation

1. To install, reverse the removal procedure.

Exterior Lighting - Headlamp Assembly

Removal and Installation

Removal

All vehicles

1. Remove the front bumper cover. For additional information, refer to For additional information, refer to: Front Bumper Cover (501-19 Bumpers, Removal and Installation).
.
2. Remove the headlamp assembly retaining bolts.

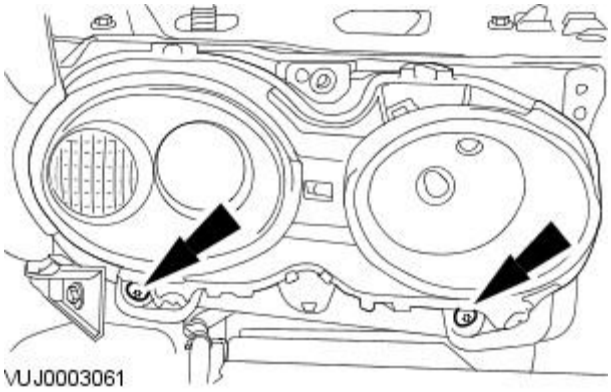

3. Detach the headlamp assembly.

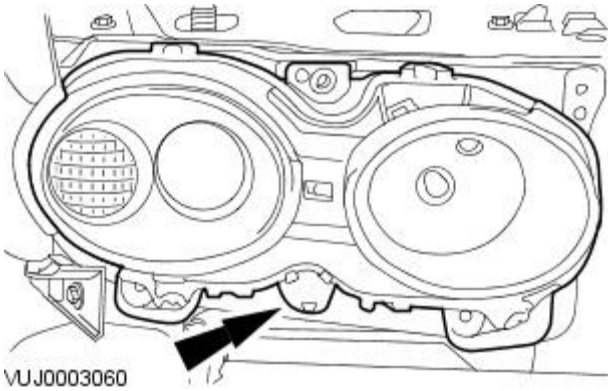

Vehicles with headlamp washers

4. Disconnect the headlamp washer hose.
   1. Release the headlamp washer hose retaining clip.
   2. Disconnect the headlamp washer hose.

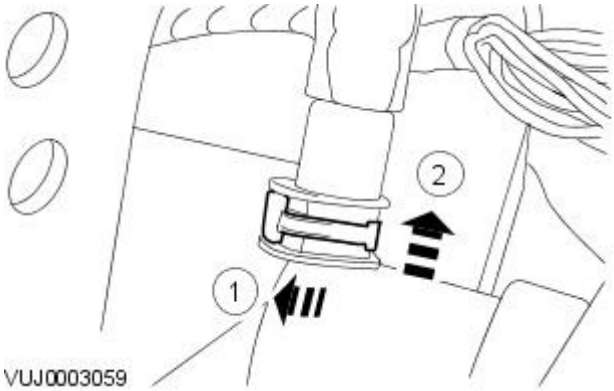

All vehicles

5. Remove the headlamp assembly.
   - Disconnect the electrical connector.

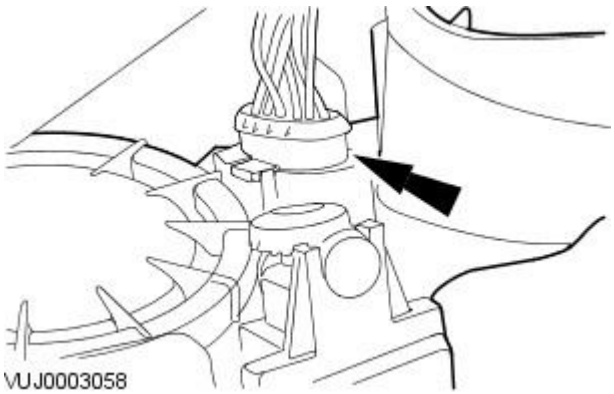

Vehicles with headlamp washers

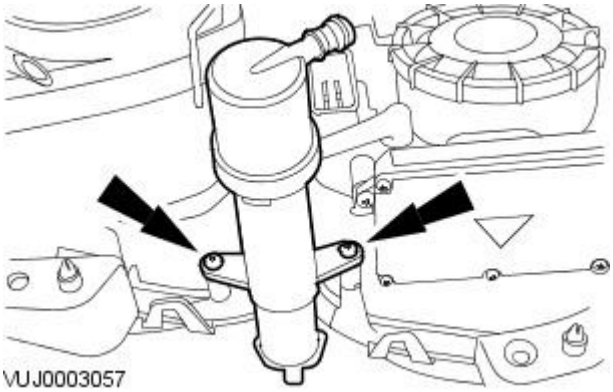

6. Remove the headlamp washer motor.

Installation

1. To install, reverse the removal procedure.
2. Check the headlamp adjustment, refer to
   For additional information, refer to: Headlamp Adjustment (417-01 Exterior Lighting, General Procedures).

Exterior Lighting - Headlamp BulbVehicles With: High Intensity Discharge Headlamps

Removal and Installation

Removal

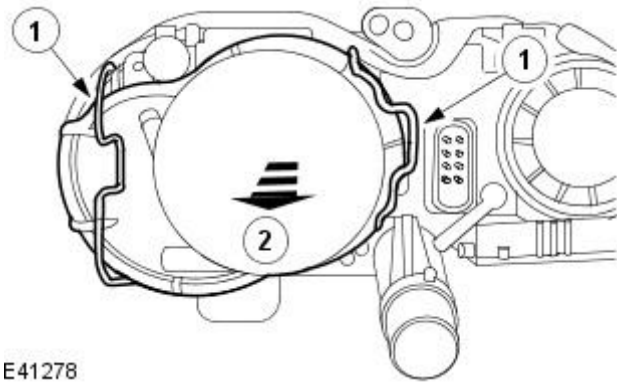

E41278

1. Remove the headlamp assembly.
For additional information, refer to Headlamp Assembly - in this section.

2. Remove the bulb cover.

1. Detach the bulb cover retaining clips.
2. Remove the bulb cover.

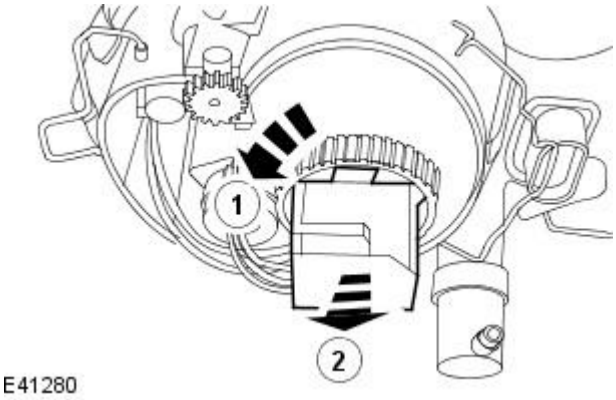

E41280

3. NOTE: The igniter assembly electrical connector will automatically release as the igniter assembly is rotated.

Remove the igniter assembly.

1. Detach the igniter assembly.
2. Remove the igniter assembly.

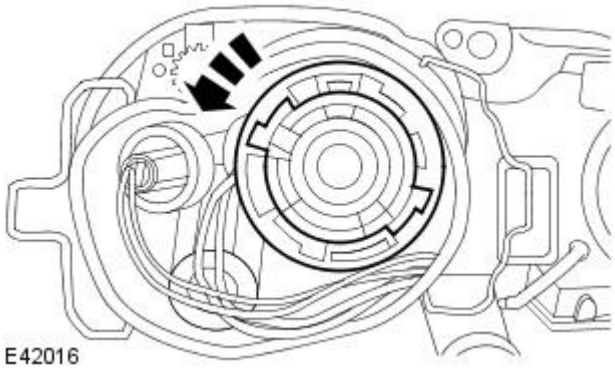
E42016

4. Remove the headlamp bulb retaining ring.

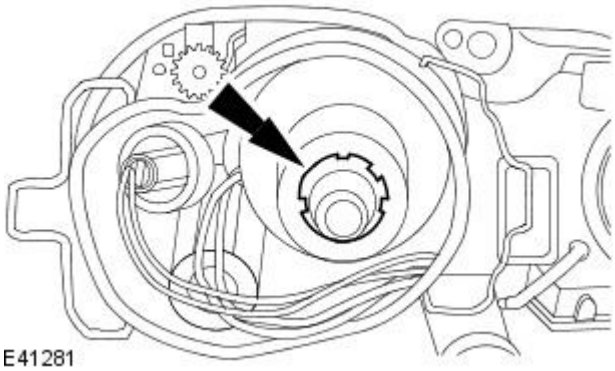
E41281

5. Remove the headlamp bulb.

Installation

1. To install, reverse the removal procedure.

Exterior Lighting - Headlamp Leveling Module

Removal and Installation

Removal

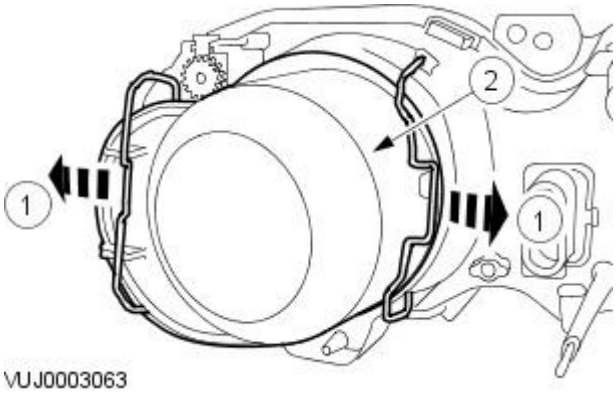

1. Remove the headlamp assembly. For additional information, refer to Headlamp Assembly
2. Remove the headlamp bulb cover.

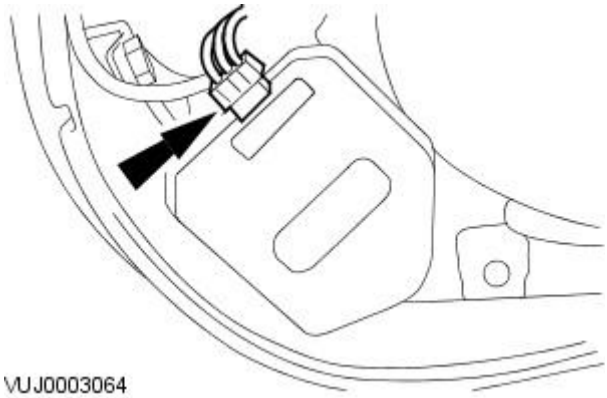

3. Disconnect the headlamp adjustment module electrical connector.

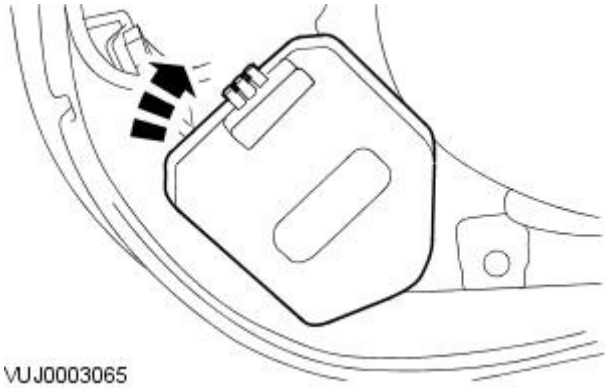

4. Remove the headlamp adjustment module.
   - Remove and discard the O-ring seal.

Installation

1. To install, reverse the removal procedure.
   - Install a new O-ring seal.

Exterior Lighting - Headlamp Leveling Sensor

Removal and Installation

Removal

1. Remove the wheel and tire assembly.
   For additional information, refer to Section 204-04 Wheels and Tires.
2. Detach the link rod from the headlamp leveling sensor.

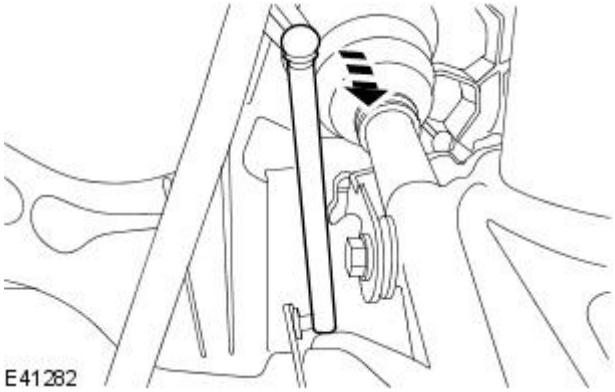

3. Disconnect the headlamp leveling sensor electrical connector.

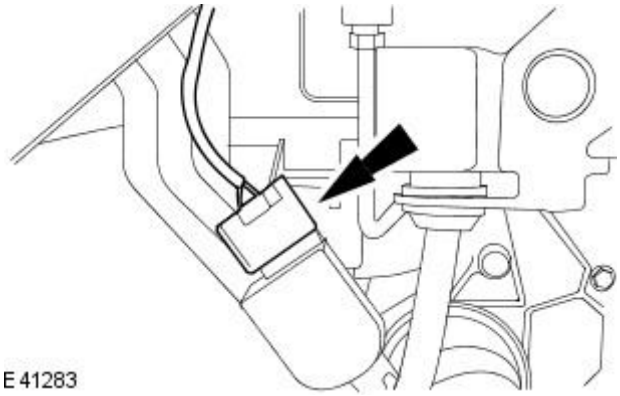

4. Remove the fender splash shield access panel.

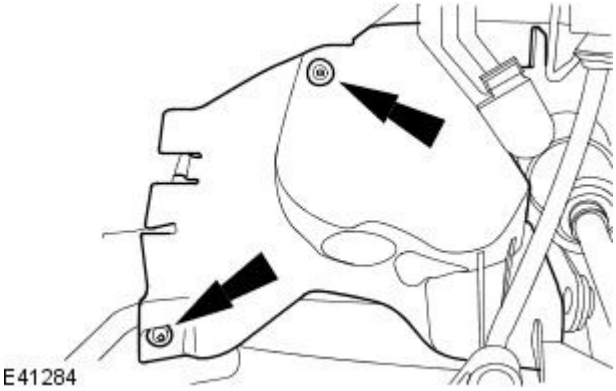

5. Detach the fender splash shield.

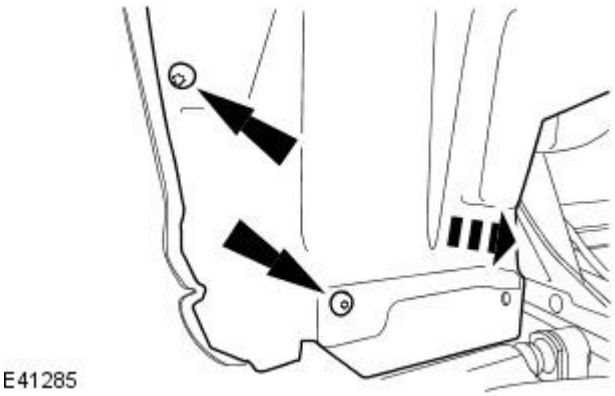

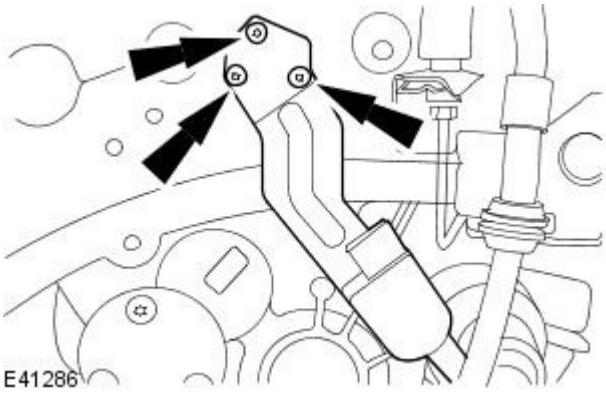

6. Remove the headlamp leveling sensor.

Installation

1. To install, reverse the removal procedure.

Exterior Lighting - Headlamp Switch

Removal and Installation

Removal

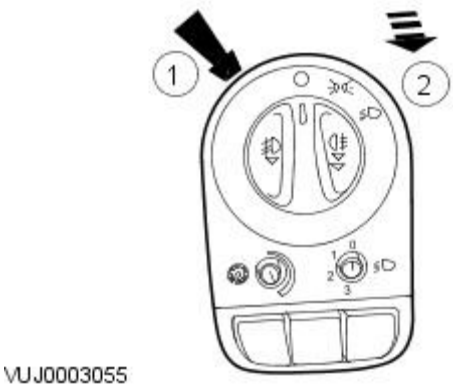

1. Detach the headlamp switch.

1. Release the retaining tang.
2. Detach the headlamp switch.

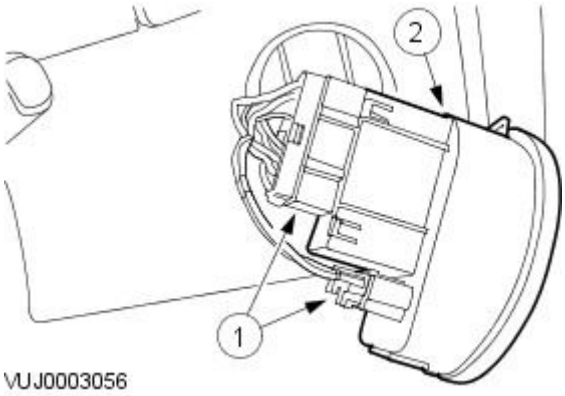

2. Remove the headlamp switch.

1. Disconnect the headlamp switch electrical connectors.
2. Remove the headlamp switch.

Installation

1. To install, reverse the removal procedure.

Exterior Lighting - High Mounted Stoplamp4-Door

Removal and Installation

Removal

1. Remove the headliner, for additional information, refer toSection 501-05 Interior Trim and Ornamentation.
2. Remove the high mounted stoplamp retaining screws.

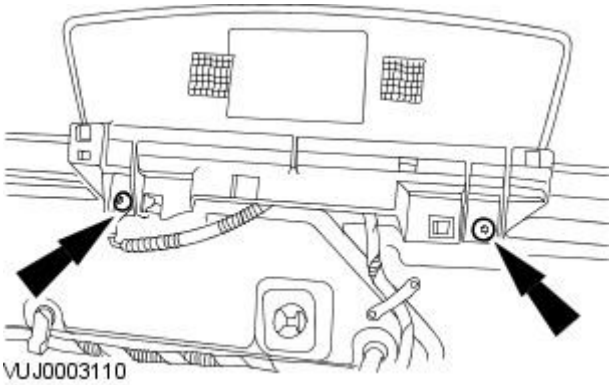

3. Remove the high mounted stoplamp.
   - Disconnect the electrical connector.

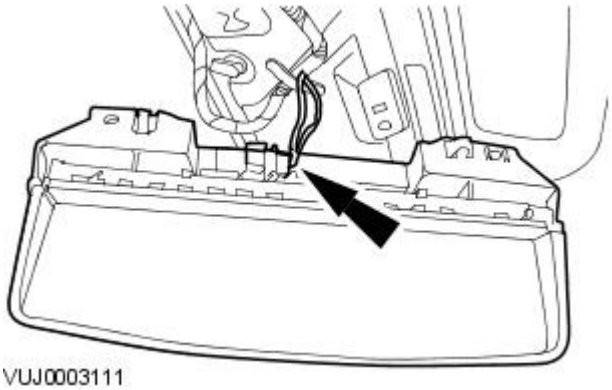

Installation

1. To install, reverse the removal procedure.

Exterior Lighting - High Mounted StoplampWagon

Removal and Installation

Removal

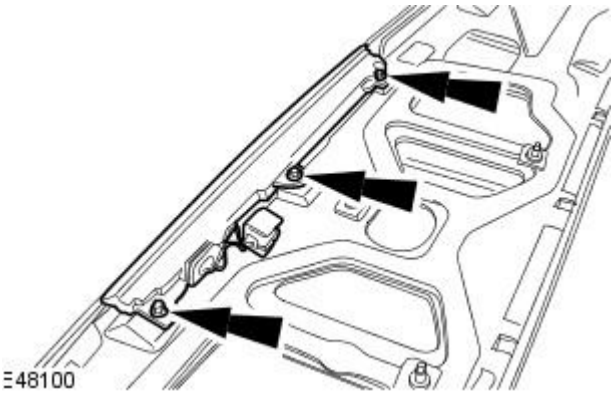

1. Remove the rear spoiler
   For additional information, refer to: Rear Spoiler - Wagon (501-08 Exterior Trim and Ornamentation, Removal and Installation).
2. Remove the high mounted stoplamp.

Installation

1. To install, reverse the removal procedure.

Exterior Lighting - Rear Lamp Assembly4-Door

Removal and Installation

Removal

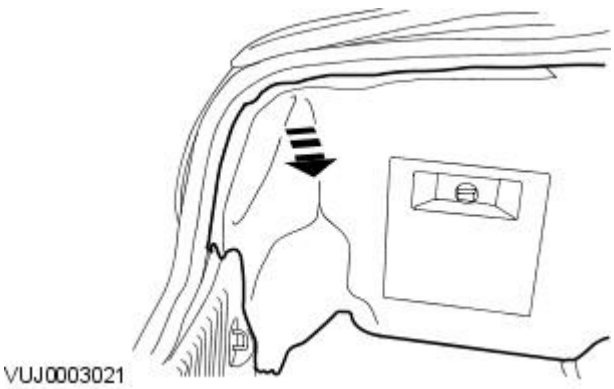

1. Detach and reposition the rear quarter trim panel.

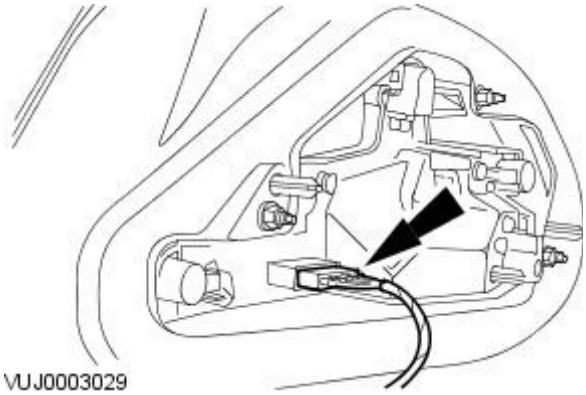

2. Disconnect the rear lamp assembly electrical connector.

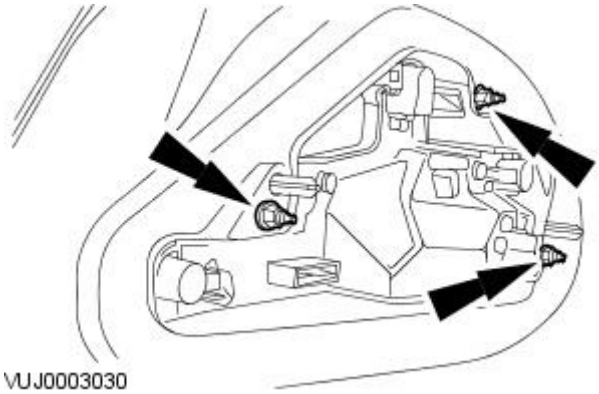

3. Remove the rear lamp assembly retaining nuts.

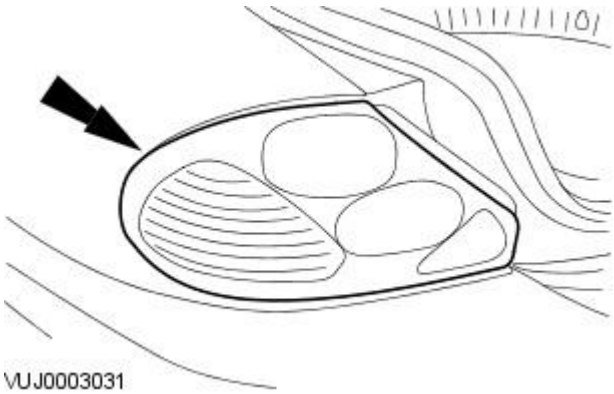

4. Remove the rear lamp assembly.

Installation

1. To install, reverse the removal procedure.

Exterior Lighting - Rear Lamp AssemblyWagon

Removal and Installation

Removal

1. Remove the loadspace trim panel.
   For additional information, refer to: Loadspace Trim Panel (501-05 Interior Trim and Ornamentation, Removal and Installation).
2. Disconnect the rear lamp assembly electrical connector.

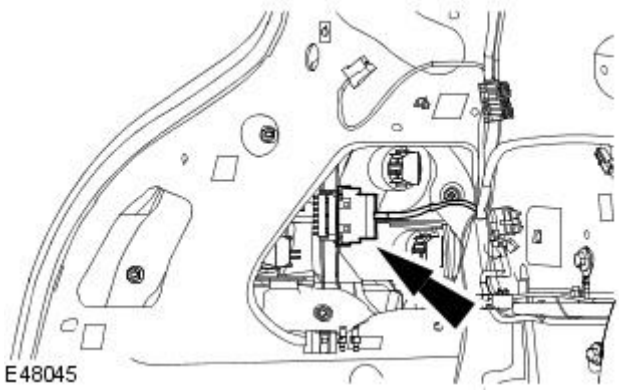

3. Remove the rear lamp assembly retaining nuts.

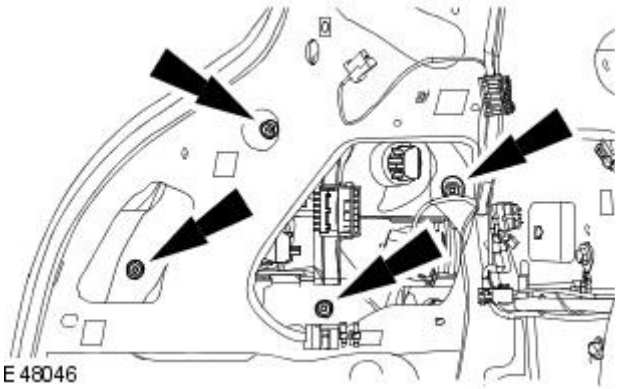

4. Detach the rear lamp assembly.
   - Press the tangs.

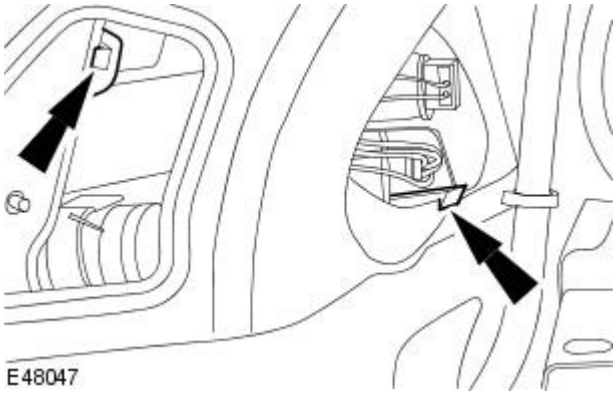

5. Remove the rear lamp assembly.

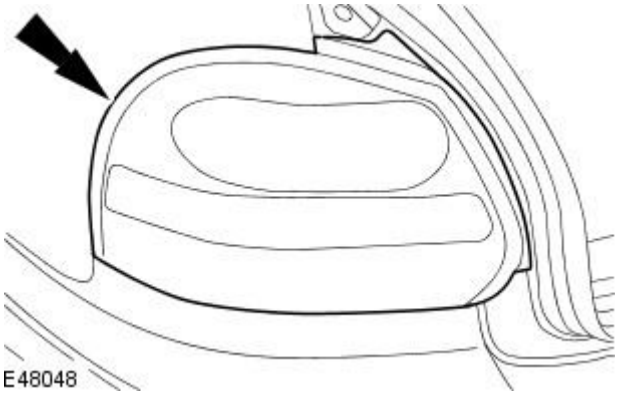

Installation

1. To install, reverse the removal procedure.

Published: 11-May-2011

Interior Lighting - Interior Lighting

Description and Operation

The interior lighting system consists of the following components:

- One front interior lamp.
- Two map reading lamps.
- Two front footwell lamps
- One rear interior lamp.
- Two front door/puddle lamps
- One glove compartment lamp.
- Two vanity mirror lamps.
- One luggage compartment lamp on 4-door vehicles.
- Two loadspace lamps on wagon.

The automatic operation of the interior lights is controlled by the general electronics module (GEM). Pressing the interior lamp switch in the overhead console switches the interior lighting control from automatic to ON position. When the switch is in the ON position, if any of the doors are open, only the rear interior lamp can be turned off.

If the rear interior lamp switch is in the AUTOMATIC position, the front interior lamp switch can operate the rear interior lamp.

In the AUTOMATIC position, when the interior lights have faded out, each lamp can be switched on or off by pressing the associated switch.

If the interior lamps are switched on and the ignition switch is turned to the OFF or ACCESSORY position, the lights will automatically turn off after ten minutes.

With the switch in the AUTOMATIC position the following times apply to the interior lights fading out assuming lights on.

Condition	Fade out time
Open any door with key not in ignition, close door	Lamps will fade out after twenty seconds
Open any door with engine in RUN position, close door	Lamps will fade out immediately
Open any door, switch ignition to the RUN position, close door	Lamps will fade out immediately

Published: 11-May-2011

Interior Lighting - Interior Lighting

Diagnosis and Testing

1. **1.** Verify the customer concern.
2. **2.** Visually inspect for obvious signs of mechanical or electrical damage.

Visual Inspection Chart

Mechanical	Electrical
• Door switch(s) • Interior lamp switch(s)	• Electrical connector(s) • Wiring harness for damage or corrosion • Bulb(s) • Fuse(s) • General electronics module(GEM)

3. **3.** If an obvious cause for an observed or reported concern is found, correct the cause (if possible) before proceeding to the next step.
4. **4.** If the cause is not visually evident, verify the symptom and refer to the Jaguar Approved Diagnostic System.

Interior Lighting - Front Interior Lamp

Removal and Installation

1. Remove the overhead console. For additional information, refer to Section 501-12 Instrument Panel and Console.

Interior Lighting - Rear Interior Lamp

Removal and Installation

Removal

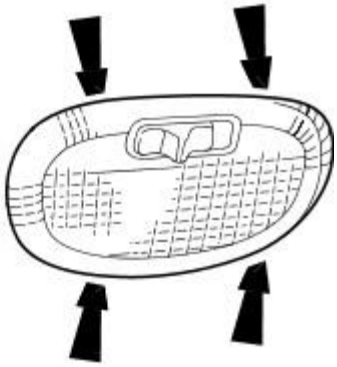

VUJ0002758

1. Detach the interior lamp.

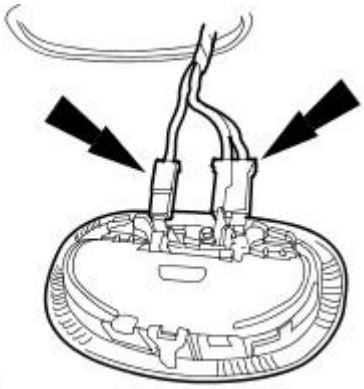

VUJ0002757

2. Remove the interior lamp.
   - Disconnect the electrical connectors.

Installation

1. To install, reverse the removal procedure.

Published: 11-May-2011

Daytime Running Lamps (DRL) - Daytime Running Lamps (DRL)

Description and Operation

DRL use the full intensity low beam headlamps which are permanently illuminated when the vehicle is being driven. DRL are used in a number of markets and there are two systems to cover these markets.

DRL CANADIAN MARKET

DRL for this market use full intensity low beam headlamps. The side marker lamps and license plate lamps will be on, but instrument cluster illumination will be off. DRL are active when the following parameters are met:

- Parking brake is off on vehicles with manual transmission or PARK is not selected on vehicles with automatic transmission
- Ignition switch is in the ignition position (II)
- The central junction box receives an engine running signal
- The lighting control switch is in the off or side lamps position. If the switch is in the 'AUTO' position the DRL will be active when the light sensor is not operating the headlamps using the auto lamps function.

If the above conditions are met, the low beam headlamps are illuminated by a Pulse Width Modulated signal (PWM) for the vehicles fitted with halogen headlamps (when the average voltage exceeds 14V). Vehicles with High Intensity Discharge (HID) headlamps operate the dip beam at normal supply voltage.

The front park lamps (including front side markers) and low beam lamps are illuminated from the Front Electronic Module (FEM), the rear park lamps (including the rear side markers and the license plate lamps) are illuminated by the Rear Electronic Module (REM).

If the lighting control switch is moved to the side lamp or headlamp positions or the auto lamps feature has activated the headlamps, DRL are deactivated and normal side lamp and headlamp functionality is operational.

• NOTE: When DRL are active, the headlamp flash function using the left hand steering column multifunction switch will operate normally. The high beam headlamp function using the left hand steering column stalk switch will be deactivated.

When the parking brake is applied on manual transmission vehicles or the selector lever is in the PARK position on automatic transmission vehicles, DRL are turned off. This is to reduce battery discharge during long periods of engine idling in cold climate conditions. When the parking brake is released or the selector lever is moved from the PARK position, normal DRL functionality is restored.

DRL DENMARK, HOLLAND, NORWAY, SWEDEN, FINLAND AND POLAND

• NOTE: DRL for Poland is on vehicles from 2008MY.

DRL for these markets use full intensity low beam headlamps. Side lamps and license plate lamps will be on, but instrument cluster illumination will be off. DRL are active when the following parameters are met:

- Ignition switch is in the ignition position (II)
- The central junction box receives an engine running signal
- The lighting control switch is in the off position. If the switch is in the 'AUTO' position the DRL will be active when the light sensor is not operating headlamps using the auto lamps function.

If the above conditions are met, the low beam headlamps are illuminated by a Pulse Width Modulated signal (PWM) for the vehicles fitted with halogen headlamps (when the average voltage exceeds 14V). Vehicles with High Intensity Discharge (HID) headlamps operate the dip beam at normal supply voltage.

The front park lamps (including front side markers) and low beam lamps are illuminated from the Front Electronic Module (FEM), the rear park lamps (including the rear side markers and the license plate lamps) are illuminated by the Rear Electronic Module (REM).

If the lighting control switch is moved to the side lamp or headlamp positions or the auto lamps feature has activated the headlamps, DRL are deactivated and normal side lamp and headlamp functionality is operational.

• NOTE: When DRL are active, the headlamp flash function using the left hand steering column multifunction switch will operate normally. The high beam headlamp function using the left hand steering column stalk switch will be deactivated.

Daytime Running Lamps (DRL) - Daytime Running Lamps (DRL)

Diagnosis and Testing

Inspection and Verification

1. **1.** Verify the customer concern.
2. **2.** Visually inspect for obvious signs of mechanical or electrical damage.

Visual Inspection Chart

Mechanical	Electrical
• Master lighting switch • Relay(s)	• Bulb(s) • Electrical connector(s) • Damaged or corroded wiring harness • Fuse(s) • Battery junction box (BJB) • Central electrical junction box (CEJB)

3. **3.** If an obvious cause for an observed or reported concern is found, correct the cause (if possible) before proceeding to the next step.
4. **4.** If the cause is not visually evident, verify the symptom and refer to the Jaguar Approved Diagnostic System.

Module Communications Network - Communications Network

Description and Operation

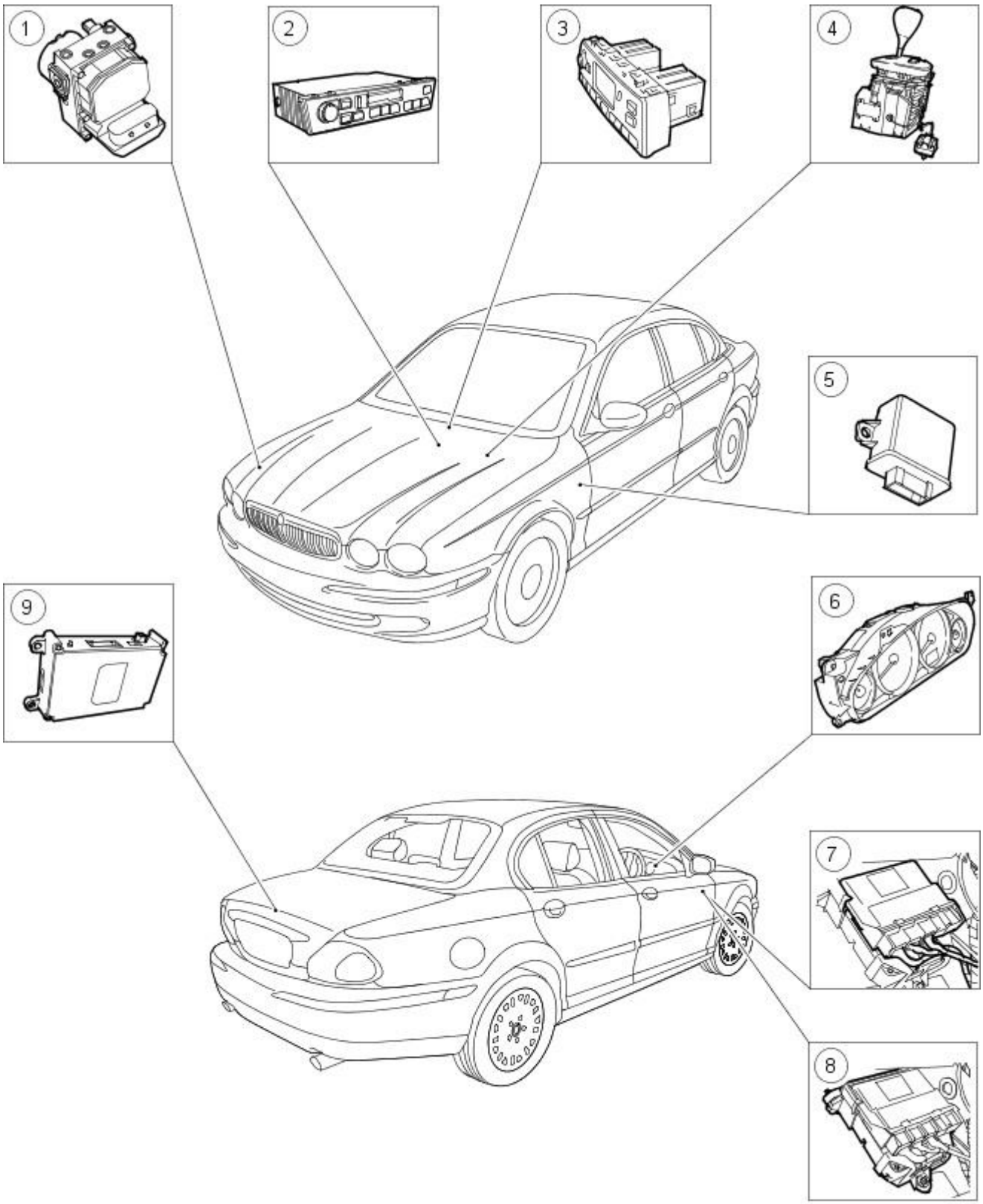

VUJ0004096

Item	Part Number	Description
1	—	Anti-lock brake control module
2	—	In car entertainment (ICE) module
3	—	Dual automatic temperature control (DATC)
4	—	J Gate module (JGM)
5	—	High intensity dipped (HID) headlight module
6	—	Instrument cluster (message center optional)
7	—	Generic electronic module (GEM)
8	—	Engine control module (ECM)
9	—	Voice activated control module (VACM)

Module Communications Network - Communications NetworkVIN Range: E96603->J28492

Diagnosis and Testing

Principles of Operation

The vehicle has four module communication networks. Only three of which are connected to the diagnostic connector. The **standard corporate protocol (SCP)** and **controller area network (CAN)**, which are an unshielded twisted pair cable: data bus **+** and data bus **-** and the **International Standard Organization (ISO)** 9141 communication network, which is a single wire network.

The **domestic data bus (D2B)**, which is a fibre optic ring network, can be diagnosed through the SCP network, and with the optical bus tester.

The SCP, CAN and ISO networks can be connected to the Jaguar approved diagnostic system by one diagnostic connector. This makes troubleshooting these systems easier by allowing one smart tester to be able to diagnose any module on the three networks from one connector. On-board diagnosis of the D2B network is through the in car entertainment (ICE) head.

The diagnostic connector is located under the instrument panel.

The ISO 9141 communications network does not permit inter-module communications. When the Jaguar approved diagnostic system communicates with modules on the ISO 9141 communication network, the diagnostic system must ask for all information, the modules will not initiate communications.

The SCP communication network remains operational even with severing of one of the bus wires. Communications will also continue if one of the bus wires is shorted to ground or battery positive voltage (B+), or if some (but not all) termination resistors are lost.

Unlike the SCP communication network, the ISO 9141 communication network will not function if the wire is shorted to ground or battery positive voltage (B+). Also, if one of the modules on the ISO 9141 network loses power or shorts internally, communication to that module will fail.

The anti-lock brake control module is connected to the CAN communication network. The module comes in two forms. The first type is the standard equipped anti-lock brake system (ABS) with traction control. It controls the brake pressure to the four wheels to keep the vehicle under control while braking. The second type of ABS is optional and is called dynamic stability control (DSC). This module adds yaw and steering wheel angle sensors to the package to help in sensing a loss of vehicle control. For additional information,
REFER to: Anti-Lock Control - Stability Assist (206-09 Anti-Lock Control - Stability Assist, Description and Operation).

The in car entertainment (ICE) head is connected to the SCP communication network and also to the D2B network. The D2B communicates with the compact disc player, cellular phone transceiver, navigation system, amplifier, and the voice control module. For additional information on the compact disc,
REFER to: Audio System (415-00 Information and Entertainment System - General Information, Diagnosis and Testing).
For additional information on the cellular phone,
REFER to: Cellular Phone (419-08 Cellular Phone, Diagnosis and Testing).
For additional information on the navigation system,
REFER to: Navigation System (419-07 Navigation System, Diagnosis and Testing).
For additional information on the amplifier,
REFER to: Audio System (415-01 Audio Unit, Description and Operation).
For additional information on the voice activated control system,
REFER to: Multifunction Electronic Module (419-10 Multifunction Electronic Modules, Diagnosis and Testing).

The electronic automatic temperature control (EATC) module is connected to the CAN communication network. The EATC module controls automatic climate functions that maintain the vehicle at a constant temperature setting. For additional information,
REFER to: Climate Control System (412-00 Climate Control System - General Information, Diagnosis and Testing).

The instrument cluster (also known as an instrument cluster module ICM) is connected to the CAN and SCP communication networks. The instrument cluster displays information received on the SCP including speedometer, odometer, fuel, and message center warnings. The instrument cluster displays information received on the CAN including ABS, air conditioning, transmission and engine condition. The instrument cluster also controls the passive anti-theft system (PATS). For additional information;
REFER to: Instrument Cluster and Panel Illumination (413-00 Instrument Cluster and Panel Illumination, Diagnosis and Testing).
For instrument cluster operation and
REFER to: Anti-Theft - Passive (419-01B Anti-Theft - Passive, Diagnosis and Testing).
for PATS.

The general electronic module (GEM) is connected to the SCP communication network. The GEM controls both interior and exterior lighting, active anti-theft functions and warning chimes. For additional information on interior lamps,
REFER to: Interior Lighting (417-02 Interior Lighting, Diagnosis and Testing).
For additional information on exterior lighting,
REFER to: Headlamps (417-01 Exterior Lighting, Diagnosis and Testing).
For additional information on active anti-theft,
REFER to: Anti-Theft - Active (419-01A Anti-Theft - Active, Diagnosis and Testing).
For additional information on warning chimes,
REFER to: Warning Devices (413-09 Warning Devices, Diagnosis and Testing).

The engine control module (ECM) is connected to both the CAN and ISO 9141 communication networks. The ECM controls the engine performance, electronic ignition, emission controls, speed control, and on board diagnostics. For additional information;
REFER to: Electronic Engine Controls - 2.5L NA V6 - AJV6/3.0L NA V6 - AJ27, VIN Range: E96603->J28492 (303-14A Electronic Engine Controls - 2.0L NA V6 - AJV6/2.5L NA V6 - AJV6/3.0L NA V6 - AJ27, Diagnosis and Testing).
,
REFER to: Electronic Engine Controls - 2.0L NA V6 - AJV6 (303-14A Electronic Engine Controls - 2.0L NA V6 - AJV6/2.5L NA V6 - AJV6/3.0L NA V6 - AJ27, Diagnosis and Testing).
or
REFER to: Electronic Engine Controls (303-14B Electronic Engine Controls - 2.0L Duratorq-TDCi/2.2L Duratorq-TDCi (110kW/150PS) - Puma, Diagnosis and Testing).

The 'phone module is connected to the D2B communication network, and incorporates the VEMS, or Vehicle Emergency Messaging System. The module allows a user to request emergency assistance (police, ambulance, fire, recovery) or directions to a desired location at the touch of a button. Also, if any of the vehicle's airbags are deployed while the VEMS system is powered ON, the system automatically issues a call for emergency assistance. For additional information,
REFER to: Compact Disc (CD) Changer - 4-Door (415-01 Audio Unit, Removal and Installation).

The airbag restraints module is connected to the ISO 9141 communication network. The airbag control module controls the deployment of the air bags based on sensor input. For additional information;

REFER to: Air Bag Supplemental Restraint System (SRS) (501-20B Supplemental Restraint System, Diagnosis and Testing).

The voice activated control module (VACM) is connected to the D2B communication network. This allows the user to select functions by giving a voice command. The VACM sends the command information by D2B to the correct module or audio unit.

The navigation system (NAV) is connected to the D2B communication network, and performs it's diagnostics via the SCP network. The NAV receives inputs from the GPS antenna and various other sensors. For additional information,
REFER to: Navigation System (419-07 Navigation System, Diagnosis and Testing).

Inspection and Verification

1. **1.** Verify the customer concern.
2. **2.** Visually inspect for obvious signs of mechanical, electrical or optical damage.

Electrical
• Fuses • Wiring harness • Loose or corroded connections • Correct engagement of electrical connectors Controller area network (CAN) • Instrument cluster (IC) • Steering wheel rotation sensor (SWRS) • Gear selector module (GSI) • Headlight levelling module (HID) • Yaw rate sensor • Electronic air temperature control module (EATCM) • Memory seat control module • Transmission control module (TCM) • Anti-lock brake control module with or without dynamic stability control (ABS/DSC) • Engine control module (ECM) Standard corporate protocol (SCP) • Generic electronic module (GEM) • Instrument cluster (IC) • In-car entertainment (ICE) • Navigation system (NAV) • Engine control module (ECM) International standards organisation (ISO) • Fuel fired heater module • Reverse park aid module • Restraints control module (RCM) • Headlight levelling module (HID) • Roof console scanner Domestic data bus (D2B) • ICE head unit (HU) • Compact disc changer (CD) • Cellular phone module (CPM) • Voice module (VACM) • Navigation system module (NSM) • Amplifier (AMP)

Visual Inspection Chart

Optical
• Routing of fibre optic harnesses • Correct engagement of optical connectors • Correct placement of optical connectors (ring order) • Damage to fibre (chafing, abrasion, kinking, cuts, etc) • Correct assembly of optical connectors (backout, etc)

Default Modes

Possible TCM default

- Fixed 4th gear
- Erratic gear shifts

Possible ECM default

- Throttle motor and relay disabled
- Throttle valve opening set to default value
- Idle speed controlled by fuel injection intervention
- Idle speed adaptation inhibited
- Throttle opening limited to 30%
- Vehicle speed limited
- Speed (cruise) control limited
- Maximum throttle opening for N range inhibited
- Maximum engine speed reduced
- HO2 sensor control circuit inhibited
- Maximum ignition retard

Symptom Chart

• NOTE: Network DTCs may be set by an error or communications failure in the network. Individual DTCs are in the table, alongside their respective modules, but may also be set by a combination of factors affecting the network, which would result in multiple DTCs being set

for one error, or, as in the case of an open circuit, no DTC being set.

DTC	Description	Possible Source	Action
P1573	CAN throttle angle error	• TP sensor fault (additional DTCs logged) • ECM CAN message error	For TP sensor circuit tests, REFER to: Electronic Engine Controls - 2.0L NA V6 - AJV6 (303-14A Electronic Engine Controls - 2.0L NA V6 - AJV6/2.5L NA V6 - AJV6/3.0L NA V6 - AJ27, Diagnosis and Testing) / Electronic Engine Controls - 2.5L NA V6 - AJV6/3.0L NA V6 - AJ27, VIN Range: E96603->J28492 (303-14A Electronic Engine Controls - 2.0L NA V6 - AJV6/2.5L NA V6 - AJV6/3.0L NA V6 - AJ27, Diagnosis and Testing). Error message sent on CAN, but not CAN related. Check for additional DTCs indicating cause.
P1601	Incorrect ECM or TCM fitted to vehicle	• ECM configuration • TCM configuration	Configure the modules using the Jaguar approved diagnostic system.
P1603	TCM EEPROM failure	• Battery disconnected while the ignition switched ON • B+ power supply circuit; open circuit • TCM failure	For TCM EEPROM tests, GO to Pinpoint Test B.
P1609	ECM microprocessor to microprocessor communication failure	• ECM failure	Please check part is not on any form of prior authorisation before replacement.
P1611	ECM sub CPU failure	• ECM failure	Please check part is not on any form of prior authorisation before replacement.
P1633	ECM main CPU failure	• ECM failure	Please check part is not on any form of prior authorisation before replacement.
P1634	Throttle 'watch-dog' circuit malfunction	• ECM failure	Please check part is not on any form of prior authorisation before replacement.
P1637	CAN ECM to ABS/TCCM or DSC control module network malfunction	• Module power supply or ground interruption • CAN open circuit fault; ABS/TCCM or DSC to ECM • CAN short circuit fault • ABS/TCCM or DSC module failure • ECM failure	Refer to power and ground test for suspect module. For ABS/TCCM or DSC CAN circuit tests, GO to Pinpoint Test C. Please check part is not on any form of prior authorisation before replacement.
P1638	CAN ECM / IC network malfunction	• Module power supply or ground interruption • CAN open circuit fault; IC to ECM • CAN short circuit fault • IC failure • ECM failure	Refer to power and ground test for suspect module. For IC CAN circuit tests, GO to Pinpoint Test D. Please check part is not on any form of prior authorisation before replacement.
P1642	CAN circuit malfunction	• Module power supply or ground interruption • CAN short circuit fault • Control module failure; Check for additional logged DTCs to locate module source	Refer to power and ground test for suspect module. For network short circuit tests, GO to Pinpoint Test E.
P1643	CAN ECM / TCM network malfunction	• Module power supply or ground interruption • CAN open circuit fault; TCM to ECM • CAN short circuit fault • TCM failure • ECM failure	Refer to power and ground test for suspect module. For CAN open circuit tests, GO to Pinpoint Test A. For network short circuit tests, GO to Pinpoint Test E. Please check part is not on any form of prior authorisation before replacement.
P1646	ECM HO2 sensor control malfunction, right-hand bank	• HO2 sensor heater failure • HO2 sensor sensing circuit; short circuit to ground, short circuit to high voltage, open circuit • ECM failure	For HO2 sensor circuit tests, REFER to: Electronic Engine Controls - 2.0L NA V6 - AJV6 (303-14A Electronic Engine Controls - 2.0L NA V6 - AJV6/2.5L NA V6 - AJV6/3.0L NA V6 - AJ27, Diagnosis and Testing) / Electronic Engine Controls - 2.5L NA V6 - AJV6/3.0L NA V6 - AJ27, VIN Range: E96603->J28492 (303-14A Electronic Engine Controls - 2.0L NA V6 - AJV6/2.5L NA V6 - AJV6/3.0L NA V6 - AJ27, Diagnosis and Testing). Please check part is not on any form of prior authorisation before replacement.
P1647	ECM HO2 sensor control malfunction, left-hand bank	• HO2 sensor heater failure • HO2 sensor sensing circuit; short circuit to ground, short circuit to high voltage, open circuit • ECM failure	For HO2 sensor circuit tests, REFER to: Electronic Engine Controls - 2.0L NA V6 - AJV6 (303-14A Electronic Engine Controls - 2.0L NA V6 - AJV6/2.5L NA V6 - AJV6/3.0L NA V6 - AJ27, Diagnosis and Testing) / Electronic Engine Controls - 2.5L NA V6 - AJV6/3.0L NA V6 - AJ27, VIN Range: E96603->J28492 (303-14A Electronic Engine Controls - 2.0L NA V6 - AJV6/2.5L NA V6 - AJV6/3.0L NA V6 - AJ27, Diagnosis and Testing). Please check part is not on any form of prior authorisation before replacement.
P1648	ECM KS self-test failure	• ECM failure	Please check part is not on any form of prior authorisation before replacement.
P1656	TP sensor amplifier circuit malfunction	• ECM failure	Please check part is not on any form of prior authorisation before replacement.

DTC	Description	Possible Source	Action
P1699	CAN ECM to EATCM network malfunction	• Module power supply or ground interruption • CAN open circuit fault; EATCM to ECM • CAN short circuit fault; EATCM to ECM • EATCM failure • ECM failure	Refer to power and ground test for suspect module. For EATCM open circuit tests, GO to Pinpoint Test A. For network short circuit tests, GO to Pinpoint Test F. Please check part is not on any form of prior authorisation before replacement.
P1777	CAN torque reduction error	• ECM CAN message error	Error message sent on CAN, but not CAN related. Check for additional DTCs indicating cause.
P1796	CAN network malfunction	• Module power supply or ground interruption • CAN short circuit fault • TCM failure	Refer to power and ground test for suspect module. For network short circuit test, GO to Pinpoint Test A.
P1797	CAN TCM/ECM network malfunction	• Module power supply or ground interruption • CAN open circuit fault; TCM to ECM • CAN short circuit fault • TCM failure • ECM failure	Refer to power and ground test for suspect module. For TCM open/short circuit tests, GO to Pinpoint Test C.
P1799	CAN TCM to ABS/TCCM or DSC module network malfunction	• Module power supply or ground interruption • CAN short circuit fault • ABS/TCCM or DSC module failure • TCM failure	Refer to power and ground test for suspect module. For ABS/TCCM short circuit tests, GO to Pinpoint Test G.
U1041	GEM SCP network invalid vehicle speed data	• ABS/DSC wheel speed message error • SCP network error	For GEM SCP network tests, GO to Pinpoint Test H.
U1135	GEM SCP network invalid ignition switch data	• Instrument cluster ignition switch message error • SCP network error	For GEM SCP network tests, GO to Pinpoint Test H.
U1147	GEM anti-theft SCP network invalid ignition key-in data	• GEM key-in message error • SCP network error	For GEM SCP network tests, GO to Pinpoint Test H.
U1262	GEM SCP network ignition switch state message missing	• SCP circuit(s); open circuit • SCP network error	For GEM SCP network tests, GO to Pinpoint Test H.
U1262	ICE SCP network circuit fault	• SCP network circuit; open circuit, short circuit to B+, short circuit to ground • SCP network circuit fault • Audio unit fault	For ICE SCP network tests, GO to Pinpoint Test I.
U1900	CAN instrumentation messages missing	• Engine management, ABS, or DSC fault • CAN network fault	For ABS/DSC CAN network tests, GO to Pinpoint Test G.
U1900	Automatic climate control CAN fault	• CAN circuit; open circuit, short circuit to B+, short circuit to ground • Automatic climate control module internal CAN fault • CAN network fault	For EATC CAN network tests, GO to Pinpoint Test F.
U1900	ABS CAN fault	• CAN circuit: open circuit, short circuit to B+, short circuit to ground • ABS control module internal CAN fault • CAN network fault	For ABS/DSC CAN network tests, GO to Pinpoint Test G.
U1900	DSC CAN fault	• CAN circuit; open circuit, short circuit to B+, short circuit to ground • DSC control module internal CAN fault • CAN network fault	For ABS/DSC CAN network tests, GO to Pinpoint Test G.
U2003	CD autochanger not responding on D2B network	• D2B network 'wake-up' circuit; short circuit to B+, short circuit to ground • D2B network fault	For D2B 'wake-up' circuit tests, GO to Pinpoint Test K. For CD autochanger D2B network tests, GO to Pinpoint Test J. For D2B permanent supply tests, GO to Pinpoint Test R.
U2008	Cellular telephone not responding on D2B network	• D2B network 'wake-up' circuit; short circuit to B+, short circuit to ground • D2B network fault	For D2B 'wake-up' circuit tests, GO to Pinpoint Test K. For cellular telephone D2B network tests, GO to Pinpoint Test L. For D2B permanent supply tests, GO to Pinpoint Test R. For D2B accessory switched supply tests, GO to Pinpoint Test S. For D2B ignition switched supply tests, GO to Pinpoint Test T.
U2019	VACM not responding on D2B network	• D2B network 'wake-up' circuit; short circuit to B+, short circuit to ground • D2B network fault	For D2B 'wake-up' circuit tests, GO to Pinpoint Test K. For VACM D2B network tests, GO to Pinpoint Test M. For D2B accessory switched supply tests, GO to Pinpoint Test S. For D2B ignition switched supply tests, GO to Pinpoint Test T.

DTC	Description	Possible Source	Action
U2196	Instrument cluster CAN engine speed message invalid	• Verify integrity of engine management system • CAN network fault	For instrument cluster CAN network tests, GO to Pinpoint Test D.
U2197	Instrument cluster CAN engine speed message invalid	• Verify integrity of engine management system • CAN network fault	For instrument cluster CAN network tests, GO to Pinpoint Test D.
U2199	Instrument cluster CAN engine coolant temperature message invalid	• Verify integrity of engine management system • CAN network fault	For instrument cluster CAN network tests, GO to Pinpoint Test D.
U2200	Instrument cluster CAN odometer count message invalid	• Verify integrity of ABS or DSC systems • CAN network fault	For instrument cluster CAN network tests, GO to Pinpoint Test D.
U2202	Invalid DSC control module CAN configuration data received from ECM	• Reconfigure the ECM using the Jaguar approved diagnostic system • CAN network fault	For ECM CAN network tests, GO to Pinpoint Test E.
U2202	Invalid ABS control module CAN configuration data received from ECM	• Reconfigure the ECM using the Jaguar approved diagnostic system • CAN network fault	For ECM CAN network tests, GO to Pinpoint Test E.
U2509	ECM unable to fulfill ABS CAN torque reduction request	• Verify integrity of engine management system • CAN network fault	For ABS/DSC CAN network tests, GO to Pinpoint Test G.
U2509	ECM unable to fulfill DSC CAN torque reduction request	• Verify integrity of engine management system • CAN network fault	For ABS/DSC CAN network tests, GO to Pinpoint Test G.
U2510 (security flash code 23)	Anti-theft ECM identification mismatch	• ECM configuration fault • Incorrect ECM installed	Reconfigure ECM using the Jaguar approved diagnostic system. Please check part is not on any form of prior authorisation before replacement.
U2511	Anti-theft ECM invalid data	• ECM configuration fault • Incorrect ECM installed • SCP network error	Reconfigure ECM using the Jaguar approved diagnostic system. Please check part is not on any form of prior authorisation before replacement.
U2514	GEM wash/wipe SCP network vehicle speed message missing	• SCP circuit(s); open circuit • SCP network error	For GEM SCP network tests, GO to Pinpoint Test H.
U2520	Memory seats	• CAN open circuit fault: memory seat module to diagnostic connector • CAN short circuit fault • Memory seat module failure	For CAN open/short circuit tests, GO to Pinpoint Test A.
U2600	Audio D2B network 'wake-up' circuit fault	• D2B network 'wake-up' circuit; short circuit to B+	For D2B 'wake-up' circuit tests, GO to Pinpoint Test K.
U2601	Audio D2B network 'wake-up' circuit fault	• D2B network 'wake-up' circuit; short circuit to B+	For D2B 'wake-up' circuit tests, GO to Pinpoint Test K.
U2601	Voice activation module D2B network 'wake-up' circuit fault	• D2B network 'wake-up' circuit; short circuit to ground	For D2B 'wake-up' circuit tests, GO to Pinpoint Test K.
U2602	Break in optical ring **FROM** ICE head unit (transmitter)	• D2B network module disconnected • D2B network optical ring broken	For optical ring tests, GO to Pinpoint Test P.
U2603	Break in optical ring **TO** ICE head unit (receiver)	• D2B network module disconnected • D2B network optical ring broken	For optical ring tests, GO to Pinpoint Test Q.
U2609	Voice activation module D2B network 'wake-up' signal out of specification	• D2B network 'wake-up' circuit; high resistance • Voice activation module failure	For D2B 'wake-up' circuit tests, GO to Pinpoint Test K.
U2610	Voice activation module D2B network 'position status report' not received	• D2B network fault	For D2B 'wake-up' circuit tests, GO to Pinpoint Test K.
U2611	Voice activation module D2B network 'alarm clear command' not received	• D2B network fault	For D2B 'wake-up' circuit tests, GO to Pinpoint Test K.
U2613	Navigation control module not responding on D2B network	• D2B network 'wake-up' circuit; short circuit to B+, short circuit to ground • D2B network fault • Module permanent supply fault • Module accessory switched	For D2B 'wake-up' circuit tests, GO to Pinpoint Test K. For navigation module optical tests, GO to Pinpoint Test N. For D2B permanent supply tests, GO to Pinpoint Test R. For D2B accessory switched supply tests, GO to Pinpoint Test S.

DTC	Description	Possible Source	Action
		supply fault • Module ignition switched supply fault	
U2614	Amplifier not responding on D2B network	• D2B network 'wake-up' circuit; short circuit to B+, short circuit to ground • D2B network fault	For D2B 'wake-up' circuit tests, GO to Pinpoint Test K. For amplifier optical tests, GO to Pinpoint Test O. For D2B permanent supply tests, GO to Pinpoint Test R. For D2B accessory switched supply tests, GO to Pinpoint Test S.
None	ISO circuit malfunction, RCM	• RCM K-line circuit; open circuit • RCM K-line circuit; short circuit	For RCM ISO tests, GO to Pinpoint Test AP.
None	ISO circuit malfunction, HID module	• HID module K-line circuit; open circuit • HID module K-line circuit; short circuit	For HID module ISO tests, GO to Pinpoint Test AQ.
None	ISO circuit malfunction, roof console module	• Roof console module K-line circuit; open circuit • Roof console module K-line circuit; short circuit	For roof console module ISO tests, GO to Pinpoint Test AR.
None	ISO circuit malfunction, reverse park aid module	• Reverse park aid module K-line circuit; open circuit • Reverse park aid module K-line circuit; short circuit	For reverse park aid module ISO tests, GO to Pinpoint Test AS.
None	ISO circuit malfunction, ECM	• ECM K-line circuit; open circuit • ECM K-line circuit; short circuit	For ECM ISO tests, GO to Pinpoint Test AT.
None	ISO circuit malfunction, fuel fired heater (FFH) module	• FFH module K-line circuit; open circuit • FFH module K-line circuit; short circuit	For FFH module ISO tests, GO to Pinpoint Test AU.

Power and Ground circuit test index

Modules may log DTCs if the power supply or GROUND is interrupted. Supply and GROUND tests are covered below by module name.

Description	Possible source	Action
IC supply or ground fault	• **B+** supply failure • **Ign+** supply failure • **Acc+** supply failure • **GROUND** failure	For IC circuit tests, GO to Pinpoint Test U.
SWRS supply or ground fault	• **Module** supply failure • **GROUND** failure	For SWRS circuit tests, GO to Pinpoint Test V.
Yaw rate sensor supply or ground fault	• **Module** supply failure • **GROUND** failure	For yaw rate sensor circuit tests, GO to Pinpoint Test W.
ABS/TCCM supply or ground fault	• **Ign+** supply failure • **Pump+** supply failure • **Solenoid+** supply failure • **GROUND** failure • Motor **GROUND** failure	For ABS/TCCM circuit tests, GO to Pinpoint Test X.
DSC module supply or ground fault	• **Ign+** supply failure • **Pump+** supply failure • **Solenoid+** supply failure • **GROUND** failure • Motor **GROUND** failure	For DSC module circuit tests, GO to Pinpoint Test Y.
GSI module supply or ground fault	• **Ign+** supply failure • **GROUND** failure	For GSI module circuit tests, GO to Pinpoint Test Z.
HID module supply or ground fault	• **Ign+** supply failure • **GROUND** failure	For HID module circuit tests, GO to Pinpoint Test AA.
EATC module supply or ground fault	• **B+** supply failure • **B+save** supply failure • **Ign+** supply failure • **GROUND** failure	For EATC module circuit tests, GO to Pinpoint Test AB.
Memory seat module supply or ground fault	• **B+1** supply failure • **B+2** supply failure • **Ign+** supply failure • Electronic **GROUND** failure • Power **GROUND** failure • Signal **GROUND**	For memory seat module circuit tests, GO to Pinpoint Test AC.

Description	Possible source	Action
	failure	
TCM supply or ground fault (16 bit)	• **B+** supply failure • **Ign+** supply failure • **GROUND** failure	For 16 bit TCM circuit tests, GO to Pinpoint Test AD.
TCM supply or ground fault (32 bit)	• **B+** supply failure • **Ign+** supply failure • **GROUND** failure	For 32 bit TCM circuit tests, GO to Pinpoint Test AE.
ECM supply or ground fault, vehicles with 2.0L petrol engine	• **B+memory** supply failure • **Control** supply failure • **GROUND** failure	For ECM circuit tests, vehicles with 2.0L petrol engines, GO to Pinpoint Test AF.
ECM supply or ground fault, vehicles with 2.5/3.0L petrol engine	• **B+memory** supply failure • **Control** supply failure • **GROUND** failure	For ECM circuit tests, vehicles with 2.5/3.0L petrol engines, GO to Pinpoint Test AG.
ECM supply or ground fault, vehicles with 2.0L diesel engine	• **Vpwr** supply failure • **Control** supply failure • **GROUND** failure	For ECM circuit tests, vehicles with 2.0L diesel engines, GO to Pinpoint Test AH.
ICE supply or ground fault	• **B+memory** supply failure • **Acc+** supply failure • **GROUND** failure	For ICE circuit tests, GO to Pinpoint Test AI.
CD supply or ground fault	• **B+** supply failure • **GROUND** failure	For CD changer circuit tests, GO to Pinpoint Test AJ.
NAV module supply or ground fault	• **B+** supply failure • **Acc+** supply failure • **GROUND** failure	For NAV module circuit tests, GO to Pinpoint Test AK.
FFH module supply or ground fault	• **B+** supply failure • **Ign+** supply failure • **GROUND** failure	For FFH module circuit tests, GO to Pinpoint Test AL.
Park aid module supply or ground fault	• **Ign+** supply failure • **GROUND** failure	For park aid module circuit tests, GO to Pinpoint Test AM.
RCM supply or ground fault	• **Ign+** supply failure • **GROUND** failure	For RCM circuit tests, GO to Pinpoint Test AN.
GEM supply or ground fault	• **B+** supply failure	For GEM circuit tests, GO to Pinpoint Test AO.
Amplifier supply or ground fault	• **B+** supply failure • **GROUND** failure	For amplifier circuit tests, GO to Pinpoint Test AV.

Pinpoint tests

• CAUTIONS:

Diagnosis by substitution from a donor vehicle is **NOT** acceptable. Each vehicle is configured to it's own vehicle identification data (VID) block, and substitution of control modules may not only not confirm a fault, but may cause faults in the vehicle being tested and/or the donor vehicle. Failure to follow this instruction may result in damage to the vehicle.

Electronic modules are sensitive to static electrical charges. If exposed to these charges, damage may result. Failure to follow this instruction may result in damage to the vehicle.

When probing connectors to take measurements in the course of the pinpoint tests, use the adaptor kit, part number 3548-1358-00. Failure to follow this instruction may result in damage to the vehicle.

• NOTE: When performing voltage or resistance tests, always use a digital multimeter (DMM) accurate to 3 decimal places, and with an up-to-date calibration certificate. When testing resistance, always take the resistance of the DMM leads into account.

• NOTE: Before beginning any diagnosis of the D2B system, codes B1342, U2602, or U2603 must be rectified. No D2B function is possible with these failures present.

• NOTE: Check and rectify basic faults before beginning diagnostic routines involving pinpoint tests.

• NOTE: If DTCs are recorded and the symptom is not present when performing the pinpoint tests, an intermittent concern may be the cause. Always check for loose connections and corroded terminals.

PINPOINT TEST A : CHECK THE CONTROLLER AREA NETWORK (CAN) CONTINUITY	
• NOTE: The following test is based on the maximum number of modules in the network. Refer to the wiring diagrams for information on networks with fewer modules.	
TEST CONDITIONS	**DETAILS/RESULTS/ACTIONS**
A1: CHECK THE RESISTANCE OF THE CAN NETWORK	
	1 Turn the ignition switch to the **OFF** position.
	2 Measure the resistance between pins 06 (Y) and 14 (G) of the diagnostic connector.

	Is the resistance between 50 and 70 ohms? **Yes** GO to A3. **No** GO to A2.
A2: CHECK THE CAN NETWORK FOR SHORT CIRCUIT	
	1 Turn the ignition switch to the **OFF** position.
	2 Measure the resistance between pins 06 (Y) and 14 (G) of the diagnostic connector.
	Is the resistance less than 50 ohms? **Yes** CHECK the network for short circuit. For additional information, refer to the wiring diagrams. Clear any DTCs, test the system for normal operation. **No** GO to A3.
A3: CHECK THE CAN + CIRCUIT BETWEEN THE DIAGNOSTIC CONNECTOR AND THE STEERING WHEEL ROTATION SENSOR	
	1 Disconnect the steering wheel rotation sensor connector, IP19.
	2 Measure the resistance between IP19, pin 03 (Y) and the diagnostic connector, pin 06 (Y).
	Is the resistance greater than 5 ohms? **Yes** REPAIR the high resistance circuit. For additional information, refer to the wiring diagrams. Clear any DTCs, test the system for normal operation. **No** GO to A4.
A4: CHECK THE CAN - CIRCUIT BETWEEN THE DIAGNOSTIC CONNECTOR AND THE STEERING WHEEL ROTATION SENSOR	
	1 Measure the resistance between IP19, pin 04 (G) and the diagnostic connector, pin 14 (G).
	Is the resistance greater than 5 ohms? **Yes** REPAIR the high resistance circuit. For additional information, refer to the wiring diagrams. Clear any DTCs, test the system for normal operation. **No** GO to A5.
A5: CHECK THE CAN + CIRCUIT BETWEEN THE DIAGNOSTIC CONNECTOR AND THE YAW RATE SENSOR	
	1 Disconnect the yaw rate sensor connector, IP20.
	2 Measure the resistance between IP20, pin 03 (Y) and the diagnostic connector, pin 06 (Y).
	Is the resistance greater than 5 ohms? **Yes** REPAIR the high resistance circuit. For additional information, refer to the wiring diagrams. Clear any DTCs, test the system for normal operation. **No** GO to A6.
A6: CHECK THE CAN - CIRCUIT BETWEEN THE DIAGNOSTIC CONNECTOR AND THE YAW RATE SENSOR	
	1 Measure the resistance between IP20, pin 02 (G) and the diagnostic connector, pin 14 (G).
	Is the resistance greater than 5 ohms? **Yes** REPAIR the high resistance circuit. For additional information, refer to the wiring diagrams. Clear any DTCs, test the system for normal operation. **No** GO to A7.
A7: CHECK THE CAN + CIRCUIT BETWEEN THE DIAGNOSTIC CONNECTOR AND THE MEMORY SEAT MODULE (WHERE FITTED)	
	1 Disconnect the memory seat module connector, DM01.
	2 Measure the resistance between DM01, pin 12 (Y) and the diagnostic connector, pin 06 (Y).
	Is the resistance greater than 5 ohms? **Yes** REPAIR the high resistance circuit. For additional information, refer to the wiring diagrams. Clear any DTCs, test the system for normal operation. **No** GO to A8.
A8: CHECK THE CAN - CIRCUIT BETWEEN THE DIAGNOSTIC CONNECTOR AND THE MEMORY SEAT MODULE (WHERE FITTED)	
	1 Measure the resistance between DM01, pin 02 (G) and the diagnostic connector, pin 14 (G).
	Is the resistance greater than 5 ohms? **Yes** REPAIR the high resistance circuit. For additional information, refer to the wiring diagrams. Clear any DTCs, test the system for normal operation. **No** GO to A9.
A9: CHECK THE CAN + CIRCUIT BETWEEN THE DIAGNOSTIC CONNECTOR AND THE ABS/DSC MODULE	
	1 Disconnect the ABS/TCCM connector, JB45, or DSC module connector, JB185.
	2 Measure the resistance between JB45/JB185, pin 24 (Y) and the diagnostic connector, pin 06 (Y).
	Is the resistance greater than 5 ohms? **Yes** REPAIR the high resistance circuit. For additional information, refer to the wiring diagrams. Clear any DTCs, test the system for normal operation. **No** GO to A10.
A10: CHECK THE CAN - CIRCUIT BETWEEN THE DIAGNOSTIC CONNECTOR AND THE ABS/DSC MODULE	
	1 Measure the resistance between JB45/JB185, pin 40 (G) and the diagnostic connector, pin 14 (G).
	Is the resistance greater than 5 ohms? **Yes** REPAIR the high resistance circuit. For additional information, refer to the wiring diagrams. Clear any DTCs, test the system for normal operation. **No** GO to A11.
A11: CHECK THE CAN + CIRCUIT BETWEEN THE DIAGNOSTIC CONNECTOR AND THE HID MODULE (WHERE FITTED)	
	1 Disconnect the HID module connector, IP130.
	2 Measure the resistance between IP130, pin 02 (Y) and the diagnostic connector, pin 06 (Y).

	Is the resistance greater than 5 ohms? **Yes** REPAIR the high resistance circuit. For additional information, refer to the wiring diagrams. Clear any DTCs, test the system for normal operation. **No** GO to A12.
A12: CHECK THE CAN - CIRCUIT BETWEEN THE DIAGNOSTIC CONNECTOR AND THE HID MODULE (WHERE FITTED)	
	1 Measure the resistance between IP130, pin 03 (G) and the diagnostic connector, pin 14 (G).
	Is the resistance greater than 5 ohms? **Yes** REPAIR the high resistance circuit. For additional information, refer to the wiring diagrams. Clear any DTCs, test the system for normal operation. **No** NO circuit fault found. Check DTCs for indications of a module fault.

PINPOINT TEST B : P1603. TCM EEPROM FAILURE	
TEST CONDITIONS	**DETAILS/RESULTS/ACTIONS**
B1: DTC SET BY 3 POSSIBLE FACTORS	
	1 Check battery voltage.
	Has the battery been discharged to a voltage where the engine would not crank? **Yes** CHARGE and test the battery. Install a new battery, if required. REFER to: Battery (414-01 Battery, Mounting and Cables, Removal and Installation). Carry out a drive-cycle. (The vehicle may lose it's adaptive values and will need to re-learn them. These values will depend on the owner's driving style, and can only be learnt by normal use.) **No** GO to B2.
B2: DTC SET BY 3 POSSIBLE FACTORS	
	1 Check the TCM for signs of water ingress.
	Does the TCM show any indication of water ingress? **Yes** INSTALL a new TCM. REFER to: Transmission Control Module (TCM) (307-01B Automatic Transmission/Transaxle - Vehicles With: 6-Speed Automatic Transaxle - AWF21, In-vehicle Repair). CLEAR the DTC, test the system for normal operation. **No** GO to B3.
B3: DTC SET BY 3 POSSIBLE FACTORS	
	1 Check if the battery has been disconnected with the ignition switched on.
	Has the battery been disconnected with the ignition switched on? **Yes** CARRY out a drive-cycle. For additional information, refer to the DTC section of JTIS. (The vehicle may lose it's adaptive values and will need to re-learn them. These values will depend on the owner's driving style, and can only be learnt by normal use.) **No** INSTALL a new TCM. REFER to: Transmission Control Module (TCM) (307-01B Automatic Transmission/Transaxle - Vehicles With: 6-Speed Automatic Transaxle - AWF21, In-vehicle Repair). CLEAR the DTC, test the system for normal operation.

PINPOINT TEST C : P1637: CAN NETWORK MALFUNCTION, TRANSMISSION CONTROL MODULE (TCM)	
TEST CONDITIONS	**DETAILS/RESULTS/ACTIONS**
C1: CHECK TCM FOR DAMAGE	
	1 Inspect the TCM
	Does the TCM indicate any signs of damage? **Yes** INSTALL a new TCM. REFER to: Transmission Control Module (TCM) (307-01B Automatic Transmission/Transaxle - Vehicles With: 6-Speed Automatic Transaxle - AWF21, In-vehicle Repair). CLEAR the DTC, test the system for normal operation. **No** GO to C2.
C2: CHECK CAN + FOR SHORT CIRCUIT TO GROUND	
	1 Measure the resistance between the diagnostic connector, pin 06, (Y) and GROUND.
	Is the resistance less than 10,000 ohms? **Yes** REPAIR the short circuit. For additional information, refer to the wiring diagrams. CLEAR the DTC, test the system for normal operation. **No** GO to C3.
C3: CHECK CAN + FOR SHORT CIRCUIT TO BATTERY	
	1 Measure the resistance between the diagnostic connector, pins 06, (Y) and pin 16 (OY).
	Is the resistance less than 10,000 ohms? **Yes** REPAIR the short circuit. For additional information, refer to the wiring diagrams. CLEAR the DTC, test the system for normal operation. **No** GO to C4.
C4: CHECK CAN - FOR SHORT CIRCUIT TO GROUND	
	1 Measure the resistance between the diagnostic connector, pin 14 (G) and GROUND.
	Is the resistance less than 10,000 ohms? **Yes** REPAIR the short circuit. For additional information, refer to the wiring diagrams. CLEAR the DTC, test the system for normal operation. **No**

	GO to C5.
C5: CHECK CAN - FOR SHORT CIRCUIT TO BATTERY	
	1 Measure the resistance between the diagnostic connector, pin 14 (G) and pin 16 (OY).
	Is the resistance less than 10,000 ohms? **Yes** REPAIR the short circuit. For additional information, refer to the wiring diagrams. CLEAR the DTC, test the system for normal operation. **No** GO to C6.
C6: CHECK FOR SHORT CIRCUIT BETWEEN CAN + AND CAN -	
	1 Measure the resistance between the diagnostic connector, pins 6 (Y) and 14 (G).
	Is the resistance less than 10,000 ohms? **Yes** REPAIR the short circuit. For additional information, refer to the wiring diagrams. CLEAR the DTC, test the system for normal operation. **No** GO to C7.
C7: CHECK FOR OPEN CIRCUIT ON CAN + BETWEEN DIAGNOSTIC CONNECTOR AND THE TCM	
	1 Disconnect the battery negative terminal. Vehicles with 16 bit modules - ● Disconnect the TCM connector, JB131. ● Measure the resistance between the diagnostic connector, pin 06 (Y) and JB131, pin 33 (Y). Vehicles with 32 bit modules - ● Disconnect the TCM connector, JB230. ● Measure the resistance between the diagnostic connector, pin 06 (Y) and JB230, pin 05 (Y).
	Is the resistance greater than 5 ohms? **Yes** REPAIR the high resistance circuit. For additional information, refer to the wiring diagrams. CLEAR the DTC, test the system for normal operation. **No** GO to C8.
C8: CHECK FOR OPEN CIRCUIT ON CAN - BETWEEN THE DIAGNOSTIC CONNECTOR AND THE TCM	
	1 Measure the resistance between the diagnostic connector, pin 14 (G) and: Vehicles with 16 bit modules - ● JB131, pin 12 (G). Vehicles with 32 bit modules - ● JB230, pin 06 (G).
	Is the resistance less than 5 ohms? **Yes** GO to C9. **No** REPAIR the CAN - circuit. For additional information, refer to the wiring diagrams. CLEAR the DTC, test the system for normal operation.
C9: CHECK FOR CORRECT BUS TERMINATION	
	1 Reconnect the TCM connector, JB131 or JB230.
	2 Measure the resistance between the diagnostic connector, pins 06 (Y) and 14 (G).
	Is the resistance between 50 and 70 ohms? **Yes** INSTALL a new TCM. REFER to: Transmission Control Module (TCM) (307-01B Automatic Transmission/Transaxle - Vehicles With: 6-Speed Automatic Transaxle - AWF21, In-vehicle Repair). CLEAR the DTC, test the system for normal operation. **No** GO to C10.
C10: CHECK CONTINUITY OF THE CAN + CIRCUIT BETWEEN THE ECM AND THE IC	
	1 To test: Vehicles with 2.5 and 3.0L engine - ● Disconnect the ECM connector, EN16, and the IC connector, IP10. ● Measure the resistance between EN16, pin 124 (Y) and IP10, pin 17 (Y). Vehicles with 2.0L petrol engine - ● Disconnect the ECM connector, EN65, and the IC connector, IP10. ● Measure the resistance between EN65, pin 89 (Y) and IP10, pin 17 (Y). Vehicles with 2.0L diesel engine - ● Disconnect the ECM connector, DL01, and the IC connector, IP10. ● Measure the resistance between DL01, pin 54 (Y) and IP10, pin 17 (Y).
	Is the resistance greater than 5 ohms? **Yes** REPAIR the CAN + circuit. For additional information, refer to the wiring diagrams. CLEAR the DTC, test the system for normal operation. **No** GO to C11.
C11: CHECK CONTINUITY OF THE CAN - CIRCUIT BETWEEN THE ECM AND THE IC	

	1 Measure the resistance between: Vehicles with 2.5 and 3.0L engine - ● EN16, pin 123 (G) and IP10, pin 18 (G). Vehicles with 2.0L petrol engine - ● EN65, pin 88 (G) and IP10, pin 18 (G). Vehicles with 2.0L diesel engine - ● DL01, pin 73 (G) and IP10, pin 18 (G).
	Is the resistance greater than 5 ohms? **Yes** REPAIR the CAN - circuit. For additional information, refer to the wiring diagrams. CLEAR the DTC, test the system for normal operation. **No** GO to C12.
C12: CHECK FOR LOSS OF TERMINATION WITHIN THE ECM	
	1 To test: Vehicles with 2.5 and 3.0L engine - ● Measure the resistance between pins 123 and 124 of the ECM. Vehicles with 2.0L petrol engine - ● Measure the resistance between pins 88 and 89 of the ECM. Vehicles with 2.0L diesel engine - ● Measure the resistance between pins 54 and 73 of the ECM.
	Is the resistance between 110 and 140 ohms? **Yes** GO to C13. **No** Please check part is not on any form of prior authorisation before replacement.
C13: CHECK FOR LOSS OF TERMINATION WITHIN THE IC	
	1 Measure the resistance between pins 17 and 18 of the IC.
	Is the resistance between 110 and 140 ohms? **Yes** POSSIBLE intermittent fault. Recheck DTCs. **No** INSTALL a new instrument cluster. REFER to: Instrument Cluster (413-01 Instrument Cluster, Removal and Installation). CLEAR the DTC, test the system for normal operation.

PINPOINT TEST D : P1638: CAN NETWORK MALFUNCTION, INSTRUMENT CLUSTER (IC)	
TEST CONDITIONS	**DETAILS/RESULTS/ACTIONS**
D1: CHECK THE IC FOR DAMAGE	
	1 Inspect the IC for damage.
	Does the IC indicate any signs of damage? **Yes** INSTALL a new instrument cluster. REFER to: Instrument Cluster (413-01 Instrument Cluster, Removal and Installation). CLEAR the DTC, test the system for normal operation. **No** GO to D2.
D2: CHECK CAN + FOR SHORT CIRCUIT TO GROUND	
	1 Turn the ignition switch to the **OFF** position.
	2 Measure the resistance between the diagnostic connector, pin 06 (Y) and GROUND.
	Is the resistance less than 10,000 ohms? **Yes** REPAIR the short circuit. For additional information, refer to the wiring diagrams. CLEAR the DTC, test the system for normal operation. **No** GO to D3.
D3: CHECK CAN + FOR SHORT CIRCUIT TO BATTERY	
	1 Measure the resistance between the diagnostic connector, pin 06 (Y) and pin 16 (OY).
	Is the resistance less than 10,000 ohms? **Yes** REPAIR the short circuit. For additional information, refer to the wiring diagrams. CLEAR the DTC, test the system for normal operation. **No** GO to D4.
D4: CHECK CAN - FOR SHORT CIRCUIT TO GROUND	
	1 Measure the resistance between the diagnostic connector, pin 14 (G) and GROUND.
	Is the resistance less than 10,000 ohms? **Yes** REPAIR the short circuit. For additional information, refer to the wiring diagrams. CLEAR the DTC, test the system for normal operation. **No** GO to D5.
D5: CHECK CAN - FOR SHORT CIRCUIT TO BATTERY	
	1 Measure the resistance between the diagnostic connector, pins 14 (G) and 16 (OY).

	Is the resistance less than 10,000 ohms? **Yes** REPAIR the short circuit. For additional information, refer to the wiring diagrams. CLEAR the DTC, test the system for normal operation. **No** GO to D6.
D6: CHECK FOR SHORT CIRCUIT BETWEEN CAN + AND CAN -	
	1 Disconnect the battery negative terminal.
	2 Measure the resistance between the diagnostic connector, pins 06 (Y) and 14 (G).
	Is the resistance less than 10,000 ohms? **Yes** REPAIR the short circuit. For additional information, refer to the wiring diagrams. CLEAR the DTC, test the system for normal operation. **No** GO to D7.
D7: CHECK FOR OPEN CIRCUIT ON CAN + BETWEEN THE DIAGNOSTIC CONNECTOR AND THE IC	
	1 Disconnect the IC connector, IP10.
	2 Measure the resistance between the diagnostic connector, pin 06 (Y) and IP10, pin 17 (Y).
	Is the resistance greater than 5 ohms? **Yes** REPAIR the high resistance circuit. For additional information, refer to the wiring diagrams. CLEAR the DTC, test the system for normal operation. **No** GO to D8.
D8: CHECK FOR OPEN CIRCUIT ON CAN - BETWEEN THE DIAGNOSTIC CONNECTOR AND THE IC	
	1 Measure the resistance between the diagnostic connector, pin 14 (G) and IP10, pin 18 (G).
	Is the resistance greater than 5 ohms? **Yes** REPAIR the high resistance circuit. For additional information, refer to the wiring diagrams. CLEAR the DTC, test the system for normal operation. **No** GO to D9.
D9: CHECK FOR CORRECT BUS TERMINATION	
	1 Reconnect the IC connector, IP10.
	2 Measure the resistance between the diagnostic connector, pins 06 (Y) and 14 (G).
	Is the resistance between 50 and 70 ohms? **Yes** INSTALL a new instrument cluster. REFER to: Instrument Cluster (413-01 Instrument Cluster, Removal and Installation). CLEAR the DTC, test the system for normal operation. **No** GO to D10.
D10: CHECK CONTINUITY OF THE CAN + CIRCUIT BETWEEN THE ECM AND THE IC	
	1 To test: Vehicles with 2.5 and 3.0L engine - ● Disconnect the ECM connector, EN16, and the IC connector, IP10. ● Measure the resistance between EN16, pin 124 (Y) and IP10, pin 17 (Y). Vehicles with 2.0L petrol engine - ● Disconnect the ECM connector, EN65, and the IC connector, IP10. ● Measure the resistance between EN65, pin 89 (Y) and IP10, pin 17 (Y). Vehicles with 2.0L diesel engine - ● Disconnect the ECM connector, DL01, and the IC connector, IP10. ● Measure the resistance between DL01, pin 54 (Y) and IP10, pin 17 (Y).
	Is the resistance greater than 5 ohms? **Yes** REPAIR the high resistance circuit. For additional information, refer to the wiring diagrams. CLEAR the DTC, test the system for normal operation. **No** GO to D11.
D11: CHECK CONTINUITY OF THE CAN - CIRCUIT BETWEEN THE ECM AND THE IC	
	1 Measure the resistance between: Vehicles with 2.5 and 3.0L engine - ● EN16, pin 123 (G) and IP10, pin 18 (G). Vehicles with 2.0L petrol engine - ● EN65, pin 88 (G) and IP10, pin 18 (G). Vehicles with 2.0L diesel engine - ● DL01, pin 73 (G) and IP10, pin 18 (G).
	Is the resistance greater than 5 ohms? **Yes** REPAIR the high resistance circuit. For additional information, refer to the wiring diagrams. CLEAR the DTC, test the system for normal operation. **No** GO to D12.
D12: CHECK FOR LOSS OF TERMINATION WITHIN THE ECM	

	1 Measure the resistance between: Vehicles with 2.5 and 3.0L engine - ● pins 123 and 124 of the ECM. Vehicles with 2.0L petrol engine - ● pins 88 and 89 of the ECM. Vehicles with 2.0L diesel engine - ● pins 54 and 73 of the ECM.
	Is the resistance between 110 and 140 ohms? **Yes** GO to D13. **No** Please check part is not on any form of prior authorisation before replacement.
D13: CHECK FOR LOSS OF TERMINATION WITHIN THE IC	
	1 Measure the resistance between pins 17 and 18 of the IC.
	Is the resistance between 110 and 140 ohms? **Yes** Possible intermittent fault. Recheck DTCs. **No** INSTALL a new instrument cluster. REFER to: Instrument Cluster (413-01 Instrument Cluster, Removal and Installation). CLEAR the DTC, test the system for normal operation.

PINPOINT TEST E : P1642; P1643; P1797: CAN NETWORK MALFUNCTION, ECM	
TEST CONDITIONS	**DETAILS/RESULTS/ACTIONS**
E1: CHECK THE ECM FOR DAMAGE	
	1 Inspect the ECM.
	Does the ECM indicate any signs of damage? **Yes** Please check part is not on any form of prior authorisation before replacement. **No** GO to E2.
E2: CHECK CAN + FOR SHORT CIRCUIT TO GROUND	
	1 Measure the resistance between the diagnostic connector, pin 06, (Y) and GROUND.
	Is the resistance less than 10,000 ohms? **Yes** REPAIR the short circuit. For additional information, refer to the wiring diagrams. CLEAR the DTC, test the system for normal operation. **No** GO to E3.
E3: CHECK CAN + FOR SHORT CIRCUIT TO BATTERY	
	1 Measure the resistance between the diagnostic connector, pin 06, (Y) and pin 16 (OY).
	Is the resistance less than 10,000 ohms? **Yes** REPAIR the short circuit. For additional information, refer to the wiring diagrams. CLEAR the DTC, test the system for normal operation. **No** GO to E4.
E4: CHECK CAN - FOR SHORT CIRCUIT TO GROUND	
	1 Measure the resistance between the diagnostic connector, pin 14 (G) and GROUND.
	Is the resistance less than 10,000 ohms? **Yes** REPAIR the short circuit. For additional information, refer to the wiring diagrams. CLEAR the DTC, test the system for normal operation. **No** GO to E5.
E5: CHECK CAN - FOR SHORT CIRCUIT TO BATTERY	
	1 Measure the resistance between the diagnostic connector, pins 14 (G) and 16 (OY).
	Is the resistance less than 10,000 ohms? **Yes** REPAIR the short circuit. For additional information, refer to the wiring diagrams. CLEAR the DTC, test the system for normal operation. **No** GO to E6.
E6: CHECK FOR SHORT CIRCUIT BETWEEN CAN + AND CAN -	
	1 Measure the resistance between the diagnostic connector, pins 06 (Y) and 14 (G).
	Is the resistance less than 10,000 ohms? **Yes** REPAIR the short circuit. For additional information, refer to the wiring diagrams. CLEAR the DTC, test the system for normal operation. **No** GO to E7.
E7: CHECK FOR OPEN CIRCUIT ON CAN + BETWEEN THE DIAGNOSTIC CONNECTOR AND THE ECM	
	1 Disconnect the battery negative terminal. Vehicles with 2.5 and 3.0L engine - ● Disconnect the ECM connector, EN16. ● Measure the resistance between IP22 pin 06 (Y) and EN16, pin 124 (Y). Vehicles with 2.0L petrol engine - ● Disconnect the ECM connector, EN65.

- Measure the resistance between IP22 pin 06 (Y) and EN65, pin 89 (Y).

  Vehicles with 2.0L diesel engine -

- Disconnect the ECM connector, DL01.
- Measure the resistance between the diagnostic connector, pin 06 (Y) and DL01, pin 54 (Y).

Is the resistance greater than 5 ohms?

Yes

REPAIR the high resistance circuit. For additional information, refer to the wiring diagrams. CLEAR the DTC, test the system for normal operation.

No

GO to E8.

E8: CHECK FOR OPEN CIRCUIT ON CAN - BETWEEN THE DIAGNOSTIC CONNECTOR AND THE ECM

1 To test:

Vehicles with 2.5 and 3.0L engine -

- Measure the resistance between the diagnostic connector, pin 14 (G) and EN16, pin 123 (G).

Vehicles with 2.0L petrol engine -

- Measure the resistance between the diagnostic connector, pin 14 (G) and EN65, pin 88 (G).

Vehicles with 2.0L diesel engine -

- Measure the resistance between the diagnostic connector, pin 14 (G) and DL01, pin 73 (G).

Is the resistance greater than 5 ohms?

Yes

REPAIR the high resistance circuit. For additional information, refer to the wiring diagrams. CLEAR the DTC, test the system for normal operation.

No

GO to E9.

E9: CHECK FOR CORRECT BUS TERMINATION

1 Reconnect the ECM connector.

2 Measure the resistance between the diagnostic connector, pins 06 (Y) and 14 (G).

Is the resistance between 50 and 70 ohms?

Yes

Please check part is not on any form of prior authorisation before replacement.

No

GO to E10.

E10: CHECK CONTINUITY OF THE CAN + CIRCUIT

1 To test:

Vehicles with 2.5 and 3.0L engine -

- Disconnect the ECM connector, EN16, and the IC connector, IP10.
- Measure the resistance between EN16, pin 124 (Y) and IP10, pin 17 (Y).

Vehicles with 2.0L petrol engine -

- Disconnect the ECM connector, EN65, and the IC connector, IP10.
- Measure the resistance between EN65, pin 89 (Y) and IP10, pin 17 (Y).

Vehicles with 2.0L diesel engine -

- Disconnect the ECM connector, DL01, and the IC connector, IP10.
- Measure the resistance between DL01, pin 54 (Y) and IP10, pin 17 (Y).

Is the resistance greater than 5 ohms?

Yes

REPAIR the high resistance circuit. For additional information, refer to the wiring diagrams. CLEAR the DTC, test the system for normal operation.

No

GO to E11.

E11: CHECK CONTINUITY OF THE CAN - CIRCUIT

1 Measure the resistance between:

Vehicles with 2.5 and 3.0L engine -

- EN16, pin 123 (G) and IP10, pin 18 (G).

Vehicles with 2.0L petrol engine -

- EN65, pin 88 (G) and IP10, pin 18 (G).

Vehicles with 2.0L diesel engine -

- DL01, pin 73 (G) and IP10, pin 18 (G).

Is the resistance greater than 5 ohms?

Yes

REPAIR the high resistance circuit. For additional information, refer to the wiring diagrams. CLEAR the DTC, test the system for normal operation.

No

GO to E12.

E12: CHECK FOR LOSS OF TERMINATION WITHIN THE ECM

1 Measure the resistance between:

Vehicles with 2.5 and 3.0L engine -

- pins 123 and 124 of the ECM.

	Vehicles with 2.0L petrol engine - ● pins 88 and 89 of the ECM. Vehicles with 2.0L diesel engine - ● pins 54 and 73 of the ECM.
	Is the resistance between 110 and 140 ohms? **Yes** GO to E13. **No** Please check part is not on any form of prior authorisation before replacement.
E13: CHECK FOR LOSS OF TERMINATION WITHIN THE IC	
	1 Measure the resistance between pins 17 and 18 of the IC.
	Is the resistance between 110 and 140 ohms? **Yes** Possible intermittent fault. Recheck DTCs. **No** INSTALL a new instrument cluster. REFER to: Instrument Cluster (413-01 Instrument Cluster, Removal and Installation). CLEAR the DTC, test the system for normal operation.

PINPOINT TEST F : P1699: CAN NETWORK MALFUNCTION, ELECTRONIC AUTOMATIC TEMPERATURE CONTROL (EATC) MODULE	
TEST CONDITIONS	**DETAILS/RESULTS/ACTIONS**
F1: CHECK THE EATC MODULE FOR DAMAGE	
	1 Inspect the EATC module for damage.
	Does the EATC module indicate any signs of damage? **Yes** INSTALL a new EATC module. REFER to: Climate Control System (412-00 Climate Control System - General Information, Description and Operation). CLEAR the DTC, test the system for normal operation. **No** GO to F2.
F2: CHECK CAN + FOR SHORT CIRCUIT TO GROUND	
	1 Measure the resistance between the diagnostic connector, pin 06 (Y) and GROUND.
	Is the resistance less than 10,000 ohms? **Yes** REPAIR the short circuit. For additional information, refer to the wiring diagrams. CLEAR the DTC, test the system for normal operation. **No** GO to F3.
F3: CHECK CAN + FOR SHORT CIRCUIT TO BATTERY	
	1 Turn the ignition switch to the **OFF** position.
	2 Measure the resistance between the diagnostic connector, pin 06 (Y) and pin 16 (OY).
	Is the resistance less than 10,000 ohms? **Yes** REPAIR the short circuit. For additional information, refer to the wiring diagrams. CLEAR the DTC, test the system for normal operation. **No** GO to F4.
F4: CHECK CAN - FOR SHORT CIRCUIT TO GROUND	
	1 Measure the resistance between the diagnostic connector, pin 14 (G) and GROUND.
	Is the resistance less than 10,000 ohms? **Yes** REPAIR the short circuit. For additional information, refer to the wiring diagrams. CLEAR the DTC, test the system for normal operation. **No** GO to F5.
F5: CHECK CAN - FOR SHORT CIRCUIT TO BATTERY	
	1 Measure the resistance between the diagnostic connector, pin 14 (G) and pin 16 (OY).
	Is the resistance less than 10,000 ohms? **Yes** REPAIR the short circuit. For additional information, refer to the wiring diagrams. CLEAR the DTC, test the system for normal operation. **No** GO to F6.
F6: CHECK FOR SHORT CIRCUIT BETWEEN CAN + AND CAN -	
	1 Disconnect the battery negative terminal.
	2 Measure the resistance between the diagnostic connector, pins 06 (Y) and 14 (G).
	Is the resistance less than 10,000 ohms? **Yes** REPAIR the short circuit. For additional information, refer to the wiring diagrams. CLEAR the DTC, test the system for normal operation. **No** GO to F7.
F7: CHECK FOR OPEN CIRCUIT ON CAN + BETWEEN THE DIAGNOSTIC CONNECTOR AND THE EATC MODULE	
	1 Disconnect the EATC module connector, IP101.
	2 Measure the resistance between the diagnostic connector, pin 06 (Y) and IP101, pin 22 (Y).
	Is the resistance greater than 5 ohms? **Yes** REPAIR the high resistance circuit. For additional information, refer to the wiring diagrams. CLEAR the DTC, test the system for normal operation. **No**

	GO to F8.
F8: CHECK FOR OPEN CIRCUIT ON CAN - BETWEEN THE DIAGNOSTIC CONNECTOR AND THE EATC MODULE	
	1 Measure the resistance between the diagnostic connector, pin 14 (G) and IP101, pin 23 (G).
	Is the resistance greater than 5 ohms? **Yes** REPAIR the high resistance circuit. For additional information, refer to the wiring diagrams. CLEAR the DTC, test the system for normal operation. **No** GO to F9.
F9: CHECK FOR CORRECT BUS TERMINATION	
	1 Reconnect the EATC module connector, IP101.
	2 Measure the resistance between the diagnostic connector, pins 06 (Y) and 14 (G).
	Is the resistance between 50 and 70 ohms? **Yes** INSTALL a new EATC module. REFER to: Climate Control System (412-00 Climate Control System - General Information, Description and Operation). CLEAR the DTC, test the system for normal operation. **No** GO to F10.
F10: CHECK CONTINUITY OF THE CAN + CIRCUIT BETWEEN THE ECM AND THE IC	
	1 To test: Vehicles with 2.5 and 3.0L engine - ● Disconnect the ECM connector, EN16, and the IC connector, IP10. ● Measure the resistance between EN16, pin 124 (Y) and IP10, pin 17 (Y). Vehicles with 2.0L petrol engine - ● Disconnect the ECM connector, EN65, and the IC connector, IP10. ● Measure the resistance between EN65, pin 89 (Y) and IP10, pin 17 (Y). Vehicles with 2.0L diesel engine - ● Disconnect the ECM connector, DL01, and the IC connector, IP10. ● Measure the resistance between DL01, pin 54 (Y) and IP10, pin 17 (Y).
	Is the resistance greater than 5 ohms? **Yes** REPAIR the high resistance circuit. For additional information, refer to the wiring diagrams. CLEAR the DTC, test the system for normal operation. **No** GO to F11.
F11: CHECK CONTINUITY OF THE CAN - CIRCUIT BETWEEN THE ECM AND THE IC	
	1 Measure the resistance between: Vehicles with 2.5 and 3.0L engine - ● EN16, pin 123 (G) and IP10, pin 18 (G). Vehicles with 2.0L petrol engine - ● EN65, pin 88 (G) and IP10, pin 18 (G). Vehicles with 2.0L diesel engine - ● DL01, pin 73 (G) and IP10, pin 18 (G).
	Is the resistance greater than 5 ohms? **Yes** REPAIR the high resistance circuit. For additional information, refer to the wiring diagrams. CLEAR the DTC, test the system for normal operation. **No** GO to F12.
F12: CHECK FOR LOSS OF TERMINATION WITHIN THE ECM	
	1 Measure the resistance between: Vehicles with 2.5 and 3.0L engine - ● pins 123 and 124 of the ECM. Vehicles with 2.0L petrol engine - ● pins 88 and 89 of the ECM. Vehicles with 2.0L diesel engine - ● pins 54 and 73 of the ECM.
	Is the resistance between 110 and 140 ohms? **Yes** GO to F13. **No** Please check part is not on any form of prior authorisation before replacement.
F13: CHECK FOR LOSS OF TERMINATION WITHIN THE IC	
	1 Measure the resistance between pins 17 and 18 of the IC.
	Is the resistance between 110 and 140 ohms? **Yes** POSSIBLE intermittent fault. Recheck DTCs. **No** INSTALL a new instrument cluster. REFER to: Instrument Cluster (413-01 Instrument Cluster, Removal and Installation).

	CLEAR the DTC, test the system for normal operation.

PINPOINT TEST G : P1799: CAN NETWORK MALFUNCTION, ANTI-LOCK BRAKE (ABS) / DYNAMIC STABILITY CONTROL (DSC) CONTROL MODULE	
TEST CONDITIONS	**DETAILS/RESULTS/ACTIONS**
G1: CHECK THE ABS OR DSC MODULE FOR DAMAGE	
	1 Inspect the ABS/TCCM or DSC module.
	Does the ABS/TCCM or DSC module indicate any signs of damage? **Yes** INSTALL a new ABS/TCCM or DSC module. REFER to: Hydraulic Control Unit (HCU) - VIN Range: C00001->J12991 (206-09 Anti-Lock Control - Stability Assist, Removal and Installation). CLEAR the DTC, test the system for normal operation. **No** GO to G2.
G2: CHECK CAN + FOR SHORT CIRCUIT TO GROUND	
	1 Turn the ignition switch to the **OFF** position.
	2 Measure the resistance between the diagnostic connector, pin 06 (Y) and GROUND.
	Is the resistance less than 10,000 ohms? **Yes** REPAIR the short circuit. For additional information, refer to the wiring diagrams. CLEAR the DTC, test the system for normal operation. **No** GO to G3.
G3: CHECK CAN + FOR SHORT CIRCUIT TO BATTERY	
	1 Measure the resistance between the diagnostic connector, pin 06, (Y) and pin 16 (OY).
	Is the resistance less than 10,000 ohms? **Yes** REPAIR the short circuit. For additional information, refer to the wiring diagrams. CLEAR the DTC, test the system for normal operation. **No** GO to G4.
G4: CHECK CAN - FOR SHORT CIRCUIT TO GROUND	
	1 Measure the resistance between the diagnostic connector, pin 14 (G) and GROUND.
	Is the resistance less than 10,000 ohms? **Yes** REPAIR the short circuit. For additional information, refer to the wiring diagrams. CLEAR the DTC, test the system for normal operation. **No** GO to G5.
G5: CHECK CAN - FOR SHORT CIRCUIT TO BATTERY	
	1 Measure the resistance between the diagnostic connector, pins 14 (G) and pin 16 (OY).
	Is the resistance less than 10,000 ohms? **Yes** REPAIR the short circuit. For additional information, refer to the wiring diagrams. CLEAR the DTC, test the system for normal operation. **No** GO to G6.
G6: CHECK FOR SHORT CIRCUIT BETWEEN CAN + AND CAN -	
	1 Disconnect the battery negative terminal.
	2 Measure the resistance between the diagnostic connector, pins 06 (Y) and 14 (G).
	Is the resistance less than 10,000 ohms? **Yes** REPAIR the short circuit. For additional information, refer to the wiring diagrams. CLEAR the DTC, test the system for normal operation. **No** GO to G7.
G7: CHECK FOR OPEN CIRCUIT ON CAN + BETWEEN THE DIAGNOSTIC CONNECTOR AND THE ABS OR DSC MODULE	
	1 Disconnect the ABS/TCCM connector, JB45, or DSC module connector, JB185.
	2 Measure the resistance between the diagnostic connector, pin 06 (Y) and JB45/JB185, pin 24 (Y).
	Is the resistance greater than 5 ohms? **Yes** REPAIR the high resistance circuit. For additional information, refer to the wiring diagrams. CLEAR the DTC, test the system for normal operation. **No** GO to G9.
G8: CHECK FOR OPEN CIRCUIT ON CAN - BETWEEN THE DIAGNOSTIC CONNECTOR AND THE ABS OR DSC MODULE	
	1 Measure the resistance between the diagnostic connector, pin 14 (G) and JB45/JB185, pin 40 (G).
	Is the resistance greater than 5 ohms? **Yes** REPAIR the high resistance circuit. For additional information, refer to the wiring diagrams. CLEAR the DTC, test the system for normal operation. **No** GO to G9.
G9: CHECK FOR CORRECT BUS TERMINATION	
	1 Reconnect the ABS/TCCM module connector, JB45, or DSC module connector, JB185.
	2 Measure the resistance between the diagnostic connector, pins 06 (Y) and 14 (G).
	Is the resistance between 50 and 70 ohms? **Yes** INSTALL a new ABS/TCCM module, or DSC module. REFER to: Hydraulic Control Unit (HCU) - VIN Range: C00001->J12991 (206-09 Anti-Lock Control - Stability Assist, Removal and Installation). CLEAR the DTC, test the system for normal operation. **No** GO to G10.
G10: CHECK CONTINUITY OF THE CAN + CIRCUIT BETWEEN THE ECM AND THE IC	

	1 To test: Vehicles with 2.5 and 3.0L engine - ● Disconnect the ECM connector, EN16, and the IC connector, IP10. ● Measure the resistance between EN16, pin 124 (Y) and IP10, pin 17 (Y). Vehicles with 2.0L petrol engine - ● Disconnect the ECM connector, EN65, and the IC connector, IP10. ● Measure the resistance between EN65, pin 89 (Y) and IP10, pin 17 (Y). Vehicles with 2.0L diesel engine - ● Disconnect the ECM connector, DL01, and the IC connector, IP10. ● Measure the resistance between DL01, pin 54 (Y) and IP10, pin 17 (Y).
	Is the resistance greater than 5 ohms? **Yes** REPAIR the high resistance circuit. For additional information, refer to the wiring diagrams. CLEAR the DTC, test the system for normal operation. **No** GO to G11.
G11: CHECK CONTINUITY OF THE CAN - CIRCUIT	
	1 Measure the resistance between: Vehicles with 2.5 and 3.0L engine - ● EN16, pin 123 (G) and IP10, pin 18 (G). Vehicles with 2.0L petrol engine - ● EN65, pin 88 (G) and IP10, pin 18 (G). Vehicles with 2.0L diesel engine - ● DL01, pin 73 (G) and IP10, pin 18 (G).
	Is the resistance greater than 5 ohms? **Yes** REPAIR the high resistance circuit. For additional information, refer to the wiring diagrams. CLEAR the DTC, test the system for normal operation. **No** GO to G12.
G12: CHECK FOR LOSS OF TERMINATION WITHIN THE ECM	
	1 Measure the resistance between: Vehicles with 2.5 and 3.0L engine - ● pins 123 and 124 of the ECM. Vehicles with 2.0L petrol engine - ● pins 88 and 89 of the ECM. Vehicles with 2.0L diesel engine - ● pins 54 and 73 of the ECM.
	Is the resistance between 110 and 140 ohms? **Yes** GO to G13. **No** Please check part is not on any form of prior authorisation before replacement.
G13: CHECK FOR LOSS OF TERMINATION WITHIN THE IC	
	1 Measure the resistance between pins 17 and 18 of the instrument cluster.
	Is the resistance between 110 and 140 ohms? **Yes** Possible intermittent fault. Recheck DTCs. Repeat tests from A1. **No** INSTALL a new instrument cluster. REFER to: Instrument Cluster (413-01 Instrument Cluster, Removal and Installation). CLEAR the DTC, test the system for normal operation.

PINPOINT TEST H : SCP NETWORK MALFUNCTION, GENERIC ELECTRONIC MODULE (GEM)	
TEST CONDITIONS	**DETAILS/RESULTS/ACTIONS**
H1: CHECK GEM FOR DAMAGE	
	1 Inspect the GEM for damage.
	Does the GEM indicate any signs of damage? **Yes** INSTALL a new GEM. REFER to: Generic Electronic Module (GEM) (419-10 Multifunction Electronic Modules, Removal and Installation). CLEAR the DTC, test the system for normal operation. **No** GO to H2.
H2: CHECK THE SCP + FOR SHORT CIRCUIT TO GROUND	
	1 Measure the resistance between the diagnostic connector, pin 02 (Y) and GROUND.
	Is the resistance less than 10,000 ohms? **Yes** REPAIR the short circuit. For additional information, refer to the wiring diagrams. CLEAR the DTC, test the system for normal operation. **No**

	GO to H3.
H3: CHECK THE SCP + FOR SHORT CIRCUIT TO BATTERY	
	1 Measure the resistance between the diagnostic connector, pins 02 (Y) and 16 (OY).
	Is the resistance less than 10,000 ohms? **Yes** REPAIR the short circuit. For additional information, refer to the wiring diagrams. CLEAR the DTC, test the system for normal operation. **No** GO to H4.
H4: CHECK THE SCP - FOR SHORT CIRCUIT TO GROUND	
	1 Measure the resistance between the diagnostic connector, pin 10 (U) and GROUND.
	Is the resistance less than 10,000 ohms? **Yes** REPAIR the short circuit. For additional information, refer to the wiring diagrams. CLEAR the DTC, test the system for normal operation. **No** GO to H5.
H5: CHECK THE SCP - FOR SHORT CIRCUIT TO BATTERY	
	1 Measure the resistance between the diagnostic connector, pins 10 (U) and 16 (OY).
	Is the resistance less than 10,000 ohms? **Yes** REPAIR the short circuit. For additional information, refer to the wiring diagrams. CLEAR the DTC, test the system for normal operation. **No** GO to H6.
H6: CHECK FOR SHORT CIRCUIT BETWEEN SCP + AND SCP -	
	1 Measure the resistance between the diagnostic connector, pins 10 (U) and 02, (Y).
	Is the resistance less than 10,000 ohms? **Yes** REPAIR the short circuit. For additional information, refer to the wiring diagrams. CLEAR the DTC, test the system for normal operation. **No** GO to H7.
H7: CHECK FOR OPEN CIRCUIT ON SCP + BETWEEN THE DIAGNOSTIC CONNECTOR AND THE GEM	
	1 Turn the ignition switch to the **OFF** position.
	2 Disconnect the battery negative terminal.
	3 Disconnect the GEM connector, IP05.
	4 Measure the resistance between the diagnostic connector, pin 02 (Y) and IP05, pin 19 (Y).
	Is the resistance greater than 5 ohms? **Yes** REPAIR the high resistance circuit. For additional information, refer to the wiring diagrams. CLEAR the DTC, test the system for normal operation. **No** GO to H8.
H8: CHECK FOR OPEN CIRCUIT ON SCP - BETWEEN THE DIAGNOSTIC CONNECTOR AND THE GEM	
	1 Measure the resistance between the diagnostic connector, pin 10 (U) and IP05, pin 18 (U).
	Is the resistance greater than 5 ohms? **Yes** REPAIR the high resistance circuit. For additional information, refer to the wiring diagrams. CLEAR the DTC, test the system for normal operation. **No** GO to H9.
H9: CHECK FOR CORRECT BUS TERMINATION ON SCP +	
	1 Reconnect the battery negative terminal.
	2 Reconnect the GEM connector, IP05.
	3 Measure the resistance between the diagnostic connector, pin 02 (Y) and GROUND.
	Is the resistance 150 to 210 ohms? **Yes** INSTALL a new GEM. REFER to: Generic Electronic Module (GEM) (419-10 Multifunction Electronic Modules, Removal and Installation). CLEAR the DTC, test the system for normal operation. **No** GO to H10.
H10: CHECK THE CONTINUITY OF THE GENERIC ELECTRONIC MODULE (GEM) SCP + CIRCUIT	
	1 Disconnect the battery negative terminal.
	2 Disconnect the GEM connector, IP05.
	3 Measure the resistance between the diagnostic connector, pin 02 (Y) and IP05, pin 19 (Y).
	Is the resistance greater than 5 ohms? **Yes** REPAIR the high resistance circuit. For additional information, refer to the wiring diagrams. CLEAR the DTC, test the system for normal operation. **No** GO to H11.
H11: CHECK FOR LOSS OF SCP + TERMINATION WITHIN THE GEM	
	1 Disconnect the GEM connector, IP06.
	2 Measure the resistance between IP05, pin 19, and IP06, pin 01 of the GEM.
	Is the resistance 320 to 400 ohms? **Yes** GO to H12. **No** INSTALL a new GEM. REFER to: Generic Electronic Module (GEM) (419-10 Multifunction Electronic Modules, Removal and Installation). CLEAR the DTC, test the system for normal operation.
H12: CHECK CONTINUITY OF THE INSTRUMENT CLUSTER (IC) SCP + CIRCUIT	
	1 Disconnect the IC connector, IP10.
	2 Measure the resistance between the diagnostic connector, pin 02 (Y) and IP10, pin 22 (Y).

	Is the resistance greater than 5 ohms? **Yes** REPAIR the high resistance circuit. For additional information, refer to the wiring diagrams. CLEAR the DTC, test the system for normal operation. **No** GO to H13.
H13: CHECK FOR LOSS OF SCP + TERMINATION WITHIN THE INSTRUMENT CLUSTER	
	1 Measure the resistance between pins 22 and 08 of the IC.
	Is the resistance 320 to 400 ohms? **Yes** Possible intermittent fault. Recheck DTCs. **No** INSTALL a new IC. REFER to: Instrument Cluster (413-01 Instrument Cluster, Removal and Installation). CLEAR the DTC, test the system for normal operation.

PINPOINT TEST I : SCP NETWORK MALFUNCTION, IN CAR ENTERTAINMENT (ICE) HEAD	
TEST CONDITIONS	**DETAILS/RESULTS/ACTIONS**
I1: CHECK ICE FOR DAMAGE	
	1 Inspect the ICE head for damage.
	Does the ICE head indicate any signs of damage? **Yes** INSTALL a new ICE head. REFER to: Audio Unit (415-01 Audio Unit, Removal and Installation). CLEAR the DTC, test the system for normal operation. **No** GO to I2.
I2: CHECK THE SCP + FOR SHORT CIRCUIT TO GROUND	
	1 Measure the resistance between the diagnostic connector, pin 02 (Y) and GROUND.
	Is the resistance less than 10,000 ohms? **Yes** REPAIR the short circuit. For additional information, refer to the wiring diagrams. CLEAR the DTC, test the system for normal operation. **No** GO to I3.
I3: CHECK THE SCP + FOR SHORT CIRCUIT TO BATTERY	
	1 Measure the resistance between the diagnostic connector, pins 02 (Y) and 16 (OY).
	Is the resistance less than 10,000 ohms? **Yes** REPAIR the short circuit. For additional information, refer to the wiring diagrams. CLEAR the DTC, test the system for normal operation. **No** GO to I4.
I4: CHECK THE SCP - FOR SHORT CIRCUIT TO GROUND	
	1 Measure the resistance between the diagnostic connector, pin 10 (U) and GROUND.
	Is the resistance less than 10,000 ohms? **Yes** REPAIR the short circuit. For additional information, refer to the wiring diagrams. CLEAR the DTC, test the system for normal operation. **No** GO to I5.
I5: CHECK THE SCP - FOR SHORT CIRCUIT TO BATTERY	
	1 Measure the resistance between the diagnostic connector, pins 10 (U) and 16 (OY).
	Is the resistance less than 10,000 ohms? **Yes** REPAIR the short circuit. For additional information, refer to the wiring diagrams. CLEAR the DTC, test the system for normal operation. **No** GO to I6.
I6: CHECK FOR SHORT CIRCUIT BETWEEN SCP + AND SCP -	
	1 Measure the resistance between the diagnostic connector, pins 10 (U) and 02 (Y).
	Is the resistance less than 10,000 ohms? **Yes** REPAIR the short circuit. For additional information, refer to the wiring diagrams. CLEAR the DTC, test the system for normal operation. **No** GO to I7.
I7: CHECK FOR OPEN CIRCUIT ON SCP + BETWEEN THE DIAGNOSTIC CONNECTOR AND THE ICE HEAD UNIT	
	1 Turn the ignition switch to the **OFF** position.
	2 Disconnect the battery negative terminal.
	3 Disconnect the ICE connector, IP65.
	4 Measure the resistance between the diagnostic connector, pin 02 (Y) and IP65, pin 09 (Y).
	Is the resistance greater than 5 ohms? **Yes** REPAIR the high resistance circuit. For additional information, refer to the wiring diagrams. CLEAR the DTC, test the system for normal operation. **No** GO to I8.
I8: CHECK FOR OPEN CIRCUIT ON SCP - BETWEEN THE DIAGNOSTIC CONNECTOR AND THE ICE HEAD UNIT	
	1 Measure the resistance between the diagnostic connector, pin 10 (U) and IP65, pin 10 (U).
	Is the resistance greater than 5 ohms? **Yes** REPAIR the high resistance circuit. For additional information, refer to the wiring diagrams. CLEAR the DTC, test the system for normal operation. **No** GO to I9.
I9: CHECK FOR CORRECT BUS TERMINATION ON SCP +	

	1 Reconnect the ICE connector, IP65.
	2 Reconnect the battery negative terminal.
	3 Measure the resistance between the diagnostic connector, pin 02 (Y) and GROUND.
	Is the resistance 150 to 210 ohms? **Yes** INSTALL a new ICE head unit. REFER to: Audio Unit (415-01 Audio Unit, Removal and Installation). CLEAR the DTC, test the system for normal operation. **No** GO to I10.
I10: CHECK THE CONTINUITY OF THE GENERIC ELECTRONIC MODULE (GEM) SCP + CIRCUIT	
	1 Turn the ignition switch to the **OFF** position.
	2 Disconnect the battery negative terminal.
	3 Disconnect the GEM connector, IP05.
	4 Measure the resistance between IP22, pin 02 (Y) and IP05, pin 19 (Y).
	Is the resistance greater than 5 ohms? **Yes** REPAIR the high resistance circuit. For additional information, refer to the wiring diagrams. CLEAR the DTC, test the system for normal operation. **No** GO to I11.
I11: CHECK FOR LOSS OF SCP + TERMINATION WITHIN THE GEM	
	1 Disconnect the GEM connector, IP06.
	2 Measure the resistance between IP05, pin 19, and IP06, pin 01 of the GEM.
	Is the resistance 320 to 400 ohms? **Yes** GO to I12. **No** INSTALL a new GEM. REFER to: Generic Electronic Module (GEM) (419-10 Multifunction Electronic Modules, Removal and Installation).
I12: CHECK CONTINUITY OF THE IC SCP + CIRCUIT	
	1 Disconnect the IC connector, IP10.
	2 Measure the resistance between the diagnostic connector, pin 02 (Y) and IP10, pin 22 (Y).
	Is the resistance greater than 5 ohms? **Yes** REPAIR the high resistance circuit. For additional information, refer to the wiring diagrams. CLEAR the DTC, test the system for normal operation. **No** GO to I13.
I13: CHECK FOR LOSS OF SCP + TERMINATION WITHIN THE IC	
	1 Measure the resistance between IP10, pin 22 (Y) and IP11, pin 08 of the IC.
	Is the resistance 320 to 400 ohms? **Yes** Possible intermittent fault. Recheck DTCs. **No** INSTALL a new IC. REFER to: Instrument Cluster (413-01 Instrument Cluster, Removal and Installation). CLEAR the DTC, test the system for normal operation.

PINPOINT TEST J : U2003: COMPACT DISC CHANGER NOT RESPONDING

CAUTION: The following tests involve disconnection of the fibre optic harnesses. The harness connectors must be protected by suitable dust caps as soon as they are disconnected, or damage may result. The use of tools to unlatch connectors must be avoided, or the connector locking function may be lost. Failure to follow this instruction may result in damage to the vehicle.

• NOTE: The following test sequence is based on a five node network. Refer to the wiring diagrams for network configuration for networks with a diferent number of nodes (all possible network combinations are shown in the wiring diagrams).

• NOTE: Should a break occur in the D2B ring, then codes, U2602, or U2603 will be set, depending on the location of the break. U2602 will set if the break is in the optical harness **FROM** the ICE head unit (the transmitter signal). U2603 will set if the break is in the optical harness **TO** the ICE head unit (the receiver signal). GO to Pinpoint Test P. GO to Pinpoint Test Q.

TEST CONDITIONS	DETAILS/RESULTS/ACTIONS
J1: CHECK CD CHANGER MODULE, USING OPTICAL BUS TESTER	
	1 Connect the Optical Bus Tester to the fibre optic lead connector, CD02.
	2 Set the Optical Bus Tester to **BY-PASS**.
	3 Clear the DTC.
	4 Turn the ignition switch to the **ACC** position.
	5 Wait for 10 seconds.
	6 Check for 'not responding' DTCs.
	Is U2003 set? **Yes** CHECK the 'wake-up' signal to the module. **No** GO to J2.
J2: CHECK FOR DTC U2602 OR U2603	
	1 Check DTCs.
	Are codes U2602 or U2603 logged? **Yes** CHECK for break in optical harness. **No** Recheck DTCs. No break in optical harness.

PINPOINT TEST K : ONE OR MORE D2B MODULES NOT RESPONDING. 'WAKE-UP' SIGNAL FAULT

• NOTE: The D2B 'wake-up' signal is not a constant, but will generate a pulse at each cycle of the ignition key. The ignition key must be turned to the OFF position following each step of the tests, and turned to the position indicated by the test step for each module. To avoid missing the signal, use an assistant to operate the key while reading the oscilloscope. The 'wake-up' line is battery voltage, switching to 0 volts for between 50 milliseconds and 110 milliseconds as the ICE head unit sends it's signal.

TEST CONDITIONS	DETAILS/RESULTS/ACTIONS

K1: CHECK THE 'WAKE-UP' SIGNAL TO THE CD CHANGER	
	1 Disconnect the CD changer connector, CA301.
	2 Turn the ignition switch to the **ACC** position.
	3 Measure the voltage between CA301, pin 03 (O) and GROUND, using an oscilloscope (see note above).
	Does the oscilloscope show a 'wake-up' signal as described? **Yes** GO to K2. **No** REPAIR the circuit between CA301, pin 03 and the ICE head unit connector, IP65, pin 19. For additional information, refer to the wiring diagrams. CLEAR the DTC. TEST the system for normal operation.
K2: CHECK THE 'WAKE-UP' SIGNAL TO THE VOICE ACTIVATED CONTROL MODULE	
	1 Disconnect the voice activated control module connector, PH02.
	2 Turn the ignition switch to the **ACC** position.
	3 Measure the voltage between PH02, pin 14 (O) and GROUND, using an oscilloscope (see note above).
	Does the oscilloscope show a 'wake-up' signal as described? **Yes** GO to K3. **No** REPAIR the circuit between PH02, pin 14 and the ICE head unit connector, IP65, pin 19. For additional information, refer to the wiring diagrams. CLEAR the DTC. TEST the system for normal operation.
K3: CHECK THE 'WAKE-UP' SIGNAL TO THE 'PHONE MODULE	
	1 Disconnect the 'phone module connector, PH01.
	2 Turn the ignition switch to the **ACC** position.
	3 Measure the voltage between PH01, pin 23 (O) and GROUND, using an oscilloscope (see note above).
	Does the oscilloscope show a 'wake-up' signal as described? **Yes** GO to K4. **No** REPAIR the circuit between PH01, pin 23 and the ICE head unit connector, IP65, pin 19. For additional information, refer to the wiring diagrams. CLEAR the DTC, test the system for normal operation.
K4: CHECK THE 'WAKE-UP' SIGNAL TO THE NAVIGATION COMPUTER	
	1 Disconnect the navigation system connector, NA07.
	2 Turn the ignition switch to the **ACC** position.
	3 Measure the voltage between NA07, pin 03 (O) and GROUND, using an oscilloscope (see note above).
	Does the oscilloscope show a 'wake-up' signal as described? **Yes** GO to K5. **No** REPAIR the circuit between NA07, pin 03 and the ICE head unit connector, IP65, pin 19. For additional information, refer to the wiring diagrams. CLEAR the DTC, test the system for normal operation.
K5: CHECK THE 'WAKE-UP' SIGNAL TO THE AMPLIFIER	
	1 Disconnect the amplifier connector, CA425.
	2 Turn the ignition switch to the **ACC** position.
	3 Measure the voltage between CA425, pin 05 (O) and GROUND, using an oscilloscope (see note above).
	Does the oscilloscope show a 'wake-up' signal as described? **Yes** CHECK for DTCs indicating a module failure. **No** REPAIR the circuit between CA425, pin 05 and the ICE head unit connector, IP65, pin 19. For additional information, refer to the wiring diagrams. CLEAR the DTC, test the system for normal operation.

PINPOINT TEST L : U2008: 'PHONE MODULE NOT RESPONDING

TEST CONDITIONS	DETAILS/RESULTS/ACTIONS
L1: CHECK 'PHONE MODULE, USING OPTICAL BUS TESTER	
	1 Connect the Optical Bus Tester to the fibre optic lead connector, CD03.
	2 Set the Optical Bus Tester to **BY-PASS**.
	3 Clear the DTC.
	4 Turn the ignition switch to the **ACC** position.
	5 Wait for 10 seconds.
	6 Check for 'not responding' DTCs.
	Is U2008 set? **Yes** CHECK the 'wake-up' signal to the module. **No** GO to L2.
L2: CHECK FOR DTC U2602 OR U2603	
	1 Check DTCs.
	Are codes U2602 or U2603 logged? **Yes** CHECK for break in optical harness. **No** RECHECK DTCs. No break in optical harness.

PINPOINT TEST M : U2019: VOICE CONTROL MODULE NOT RESPONDING

TEST CONDITIONS	DETAILS/RESULTS/ACTIONS
M1: CHECK VOICE CONTROL MODULE, USING OPTICAL BUS TESTER	
	1 Connect the Optical Bus Tester to the fibre optic lead connector, CD04.
	2 Set the Optical Bus Tester to **BY-PASS**.
	3 Clear the DTC.
	4 Turn the ignition switch to the **ACC** position.
	5 Wait for 10 seconds.
	6 Check for 'not responding' DTCs.

	Is U2019 set? **Yes** CHECK the 'wake-up' signal to the module. **No** GO to M2.
M2: CHECK FOR DTC U2602 OR U2603	
	1 Check DTCs.
	Are codes U2602 or U2603 logged? **Yes** CHECK for break in optical harness. **No** RECHECK DTCs. No break in optical harness.

PINPOINT TEST N : U2613: NAVIGATION CONTROL MODULE NOT RESPONDING	
TEST CONDITIONS	**DETAILS/RESULTS/ACTIONS**
N1: CHECK NAVIGATION CONTROL MODULE, USING OPTICAL BUS TESTER	
	1 Connect the Optical Bus Tester to the fibre optic connector, CD05.
	2 Set the Optical Bus Tester to **BY-PASS**.
	3 Clear the DTC.
	4 Turn the ignition switch to the **ACC** position.
	5 Wait for 10 seconds.
	6 Check for DTCs.
	Is U2613 set? **Yes** CHECK the 'wake-up' signal to the module. **No** GO to N2.
N2: CHECK FOR DTC U2602 OR U2603	
	1 Check DTCs.
	Are codes U2602 or U2603 logged? **Yes** CHECK for break in optical harness. **No** RECHECK DTCs. No break in optical harness.

PINPOINT TEST O : U2614: AMPLIFIER NOT RESPONDING	
TEST CONDITIONS	**DETAILS/RESULTS/ACTIONS**
O1: CHECK AMPLIFIER, USING OPTICAL BUS TESTER	
	1 Connect the Optical Bus Tester to the fibre optic connector, CD07.
	2 Set the Optical Bus Tester to **BY-PASS**.
	3 Clear the DTC.
	4 Turn the ignition switch to the **ACC** position.
	5 Wait for 10 seconds.
	6 Check for DTCs.
	Is U2614 set? **Yes** CHECK the 'wake-up' signal to the module. **No** GO to O2.
O2: CHECK FOR DTC U2602 OR U2603	
	1 Check DTCs.
	Are codes U2602 or U2603 logged? **Yes** CHECK for break in optical harness. **No** RECHECK DTCs. No break in optical harness.

PINPOINT TEST P : U2602: BREAK IN OPTICAL HARNESS FROM ICE HEAD UNIT (TRANSMITTER)	
TEST CONDITIONS	**DETAILS/RESULTS/ACTIONS**
P1: CHECK FIBRE OPTIC LEAD BETWEEN LUGGAGE COMPARTMENT JOINT AND CD CHANGER	
	1 Disconnect the fibre optic connector, CD02.
	2 Disconnect the fibre optic connector, CD06.
	3 Connect the Optical Bus Tester to the fibre optic connector, CD06.
	4 Set the Optical Bus Tester to **TX**.
	5 Set the Optical Bus Tester to **ON**.
	6 Check for light pulses at the receiver pin of disconnected D2B connector, CD02.
	Are light pulses visible? **Yes** GO to P2. **No** INSTALL a new telematic harness between CD06 and CD02. For additional information, refer to the wiring diagrams. CLEAR the DTC, test the system for normal operation.
P2: CHECK CABIN FIBRE OPTIC HARNESS	
	1 Disconnect the fibre optic connector, CD01.
	2 Disconnect the fibre optic connector, CD06.
	3 Connect the Optical Bus Tester to CD01 using adaptor lead.
	4 Set the Optical Bus Tester to **TX**.
	5 Set the Optical Bus Tester to **ON**.
	6 Check for light pulses at the receiver pin of disconnected D2B connector, CD06.

	Are light pulses visible? **Yes** GO to P3. **No** INSTALL a new cabin optical harness between CD06 and CD01. For additional information, refer to the wiring diagrams. CLEAR the DTC, test the system for normal operation.
P3: CHECK FIBRE OPTIC LEAD BETWEEN 'A' POST AND ICE HEAD UNIT	
	1 Disconnect the fibre optic connector, ID01.
	2 Connect the Optical Bus Tester to ID01 using the adaptor lead.
	3 Set the Optical Bus Tester to **TX**.
	4 Set the Optical Bus Tester to **ON**.
	5 Check for light pulses at the receiver pin of disconnected D2B connector, CD001.
	Are light pulses visible? **Yes** GO to P4. **No** INSTALL a new instrument optical harness between CD01 and ID01. For additional information, refer to the wiring diagrams. CLEAR the DTC, test the system for normal operation.
P4: CHECK THE ICE HEAD UNIT	
	1 Turn the ignition switch to the **ACC** position.
	2 Wait for 10 seconds.
	3 Check for light pulses at the transmitter pin of disconnected D2B connector, ID01 (rear of ICE head unit).
	Are light pulses visible? **Yes** GO to P5. **No** INSTALL a new ICE head unit, REFER to: Audio Unit (415-01 Audio Unit, Removal and Installation). CLEAR the DTC, test the system for normal operation.
P5: CHECK THE FIBRE OPTIC LEAD FROM THE CD CHANGER TO THE 'PHONE MODULE	
	1 Disconnect the fibre optic connector CD02.
	2 Disconnect the fibre optic connector CD03.
	3 Connect the Optical Bus Tester to CD02.
	4 Set the Optical Bus Tester to **TX**.
	5 Set the Optical Bus Tester to **ON**.
	6 Check for light pulses at the transmitter pin of disconnected D2B connector, CD03.
	Are light pulses visible? **Yes** GO to P6. **No** INSTALL a new telematic harness between CD03 and CD02. For additional information, refer to the wiring diagrams. CLEAR the DTC, test the system for normal operation.
P6: CHECK THE FIBRE OPTIC LEAD FROM THE 'PHONE MODULE TO THE VOICE MODULE	
	1 Disconnect the fibre optic connector CD04.
	2 Connect the Optical Bus Tester to CD03.
	3 Set the Optical Bus Tester to **TX**.
	4 Set the Optical Bus Tester to **ON**.
	5 Check for light pulses at the transmitter pin of disconnected D2B connector, CD04.
	Are light pulses visible? **Yes** GO to P7. **No** INSTALL a new telematic harness between CD03 and CD04. For additional information, refer to the wiring diagrams. CLEAR the DTC, test the system for normal operation.
P7: CHECK THE FIBRE OPTIC LEAD FROM THE VOICE MODULE TO THE NAVIGATION COMPUTER	
	1 Disconnect the fibre optic connector CD04.
	2 Disconnect the fibre optic connector CD05.
	3 Connect the Optical Bus Tester to CD04.
	4 Set the Optical Bus Tester to **TX**.
	5 Set the Optical Bus Tester to **ON**.
	6 Check for light pulses at the transmitter pin of disconnected D2B connector, CD05.
	Are light pulses visible? **Yes** GO to P8. **No** INSTALL a new telematic harness between CD05 and CD04. For additional information, refer to the wiring diagrams. CLEAR the DTC, test the system for normal operation.
P8: CHECK THE FIBRE OPTIC LEAD FROM THE NAVIGATION COMPUTER TO THE AMPLIFIER	
	1 Disconnect the fibre optic connector CD07.
	2 Disconnect the fibre optic connector CD05.
	3 Connect the Optical Bus Tester to CD05.
	4 Set the Optical Bus Tester to **TX**.
	5 Set the Optical Bus Tester to **ON**.
	6 Check for light pulses at the transmitter pin of disconnected D2B connector, CD07.
	Are light pulses visible? **Yes** CHECK for DTC U2603. **No** INSTALL a new telematic harness between CD05 and CD07. For additional information, refer to the wiring diagrams. CLEAR the DTC, test the system for normal operation.

PINPOINT TEST Q : U2603: BREAK IN OPTICAL HARNESS TO ICE HEAD UNIT (RECEIVER)

TEST CONDITIONS	DETAILS/RESULTS/ACTIONS

Q1: CHECK FIBRE OPTIC LEAD BETWEEN LUGGAGE COMPARTMENT JOINT AND AMPLIFIER	
	1 Disconnect the fibre optic connector, CD06.
	2 Disconnect the fibre optic connector, CD07.
	3 Connect the Optical Bus Tester to CD07.
	4 Set the Optical Bus Tester to **TX**.
	5 Set the Optical Bus Tester to **ON**.
	6 Check for light pulses at the receiver pin of disconnected D2B connector, CD06.
	Are light pulses visible? **Yes** GO to Q2. **No** INSTALL a new telematic harness between CD06 and C07. For additional information, refer to the wiring diagrams. CLEAR the DTC,test the system for normal operation.
Q2: CHECK CABIN FIBRE OPTIC HARNESS	
	1 Disconnect the fibre optic connector, CD01.
	2 Disconnect the fibre optic connector, CD06.
	3 Connect the Optical Bus Tester to CD06 using adaptor lead.
	4 Set the Optical Bus Tester to **TX**.
	5 Set the Optical Bus Tester to **ON**.
	6 Check for light pulses at the receiver pin of disconnected D2B connector, CD01.
	Are light pulses visible? **Yes** GO to Q3. **No** INSTALL a new cabin optical harness between CD06 and CD01. For additional information, refer to the wiring diagrams. CLEAR the DTC, test the system for normal operation.
Q3: CHECK FIBRE OPTIC LEAD BETWEEN 'A' POST AND ICE HEAD UNIT	
	1 Connect the Optical Bus Tester to ID01.
	2 Set the Optical Bus Tester to **TX**.
	3 Set the Optical Bus Tester to **ON**.
	4 Check for light pulses at the receiver pin of disconnected D2B connector, ID01.
	Are light pulses visible? **Yes** GO to Q4. **No** INSTALL a new instrument optical harness between CD01 and ID01. For additional information, refer to the wiring diagrams. CLEAR the DTC, test the system for normal operation.
Q4: CHECK THE ICE HEAD UNIT	
	1 Connect the optical short link between the receiver and transmitter of the ICE head unit.
	2 Turn the ignition switch to the **ACC** position.
	3 Wait for 10 seconds.
	4 Check for DTC.
	Is U2603 logged? **Yes** INSTALL a new ICE head unit, REFER to: Audio Unit (415-01 Audio Unit, Removal and Installation). CLEAR the DTC. TEST the system for normal operation. **No** RECHECK DTCs. No fault found in D2B system.

PINPOINT TEST R : ONE OR MORE D2B MODULES NOT RESPONDING. PERMANENT SUPPLY FAULT	
TEST CONDITIONS	**DETAILS/RESULTS/ACTIONS**
R1: CHECK THE PERMANENT SUPPLY TO THE CD CHANGER	
	1 Disconnect the CD changer connector, CA301.
	2 Measure the voltage between CA301, pin 02 (OY) and GROUND.
	Is the voltage less than 10 volts? **Yes** REPAIR the circuit between the CD changer connector, CA301, pin 02, and fuse 72 of the central junction fuse box. For additional information, refer to the wiring diagrams. CLEAR the DTC, test the system for normal operation. **No** CHECK the module for GROUND. INSTALL a new CD Changer. REFER to: Compact Disc (CD) Changer - 4-Door (415-01 Audio Unit, Removal and Installation). CLEAR the DTC, test the system for normal operation.GO to R2.
R2: CHECK THE PERMANENT SUPPLY TO THE VOICE ACTIVATED CONTROL MODULE	
	1 Disconnect the voice activated control module connector, PH02.
	2 Measure the voltage between PH02, pin 22 (NR) and GROUND.
	Is the voltage less than 10 volts? **Yes** REPAIR the circuit between the voice activated control module connector, PH02, pin 22, and fuse 71 of the central junction fuse box. For additional information, refer to the wiring diagrams. CLEAR the DTC, test the system for normal operation. **No** CHECK the module for GROUND. INSTALL a new VACM. REFER to: Multifunction Voice Activated Module - 4-Door (419-10 Multifunction Electronic Modules, Removal and Installation). CLEAR the DTC, test the system for normal operation.GO to R3.
R3: CHECK THE PERMANENT SUPPLY TO THE 'PHONE MODULE	
	1 Disconnect the 'phone module connector, PH01.
	2 Measure the voltage between PH01, pins 12 and 13 (NR) and GROUND.
	Is the voltage less than 10 volts? **Yes** REPAIR the circuit between the 'phone module connector, PH01, pins 12 and 13 and fuse 71 of the central junction fuse box. For additional information, refer to the wiring diagrams. CLEAR the DTC, test the system for normal operation.

	No CHECK the module for GROUND. INSTALL a new 'phone module. REFER to: Module - 4-Door (419-08 Cellular Phone, Removal and Installation). CLEAR the DTC, test the system for normal operation.GO to R4.
R4: CHECK THE PERMANENT SUPPLY TO THE NAVIGATION MODULE	
	1 Disconnect the navigation module connector, NA07.
	2 Measure the voltage between NA07, pin 01 (OY) and GROUND.
	Is the voltage less than 10 volts? **Yes** Repair the circuit between the navigation module connector, NA07, pin 01 and fuse 72 of the central junction fuse box. For additional information, refer to the wiring diagrams. CLEAR the DTC, test the system for normal operation. **No** CHECK the module for GROUND. INSTALL a new navigation module. REFER to: Navigation System Module - 4-Door (419-07 Navigation System, Removal and Installation). CLEAR the DTC, test the system for normal operation.GO to R5.
R5: CHECK THE PERMANENT SUPPLY TO THE AMPLIFIER	
	1 Disconnect the amplifier connector, CA425.
	2 Measure the voltage between CA425, pin 09 (NR) and GROUND.
	3 Measure the voltage between CA425, pin 03 (NR) and GROUND.
	Is either voltage less than 10 volts? **Yes** Repair the circuit between the amplifier connector, CA425 and fuse 20 of the primary junction box. For additional information, refer to the wiring diagrams. CLEAR the DTC, test the system for normal operation. **No** CHECK the module for GROUND. INSTALL a new amplifier. CLEAR the DTC, test the system for normal operation.

PINPOINT TEST S : ONE OR MORE D2B MODULES NOT RESPONDING. ACCESSORY SWITCHED SUPPLY FAULT	
TEST CONDITIONS	**DETAILS/RESULTS/ACTIONS**
S1: CHECK THE ACCESSORY SWITCHED SUPPLY TO THE VOICE ACTIVATED CONTROL MODULE	
	1 Disconnect the voice activated control module connector, PH02.
	2 Turn the ignition switch to the **ACC** position.
	3 Measure the voltage between PH02, pin 08 (YG) and GROUND.
	Is the voltage less than 10 volts? **Yes** REPAIR the circuit between the voice activated control module connector, PH02, pin 08 and the ignition switch. For additional information, refer to the wiring diagrams. CLEAR the DTC, test the system for normal operation. (This circuit includes the central junction fuse box, fuse 69) . **No** GO to S2.
S2: CHECK THE ACCESSORY SWITCHED SUPPLY TO THE 'PHONE MODULE	
	1 Disconnect the 'phone module connector, PH01.
	2 Turn the ignition switch to the **ACC** position.
	3 Measure the voltage between PH01, pin 14 (YG) and GROUND.
	Is the voltage less than 10 volts? **Yes** REPAIR the circuit between the 'phone module connector, PH01, pin 14 and the ignition switch. This circuit includes the central junction fuse box, fuse 69. For additional information, refer to the wiring diagrams. CLEAR the DTC, test the system for normal operation. **No** GO to S3.
S3: CHECK THE ACCESSORY SWITCHED SUPPLY TO THE NAVIGATION MODULE	
	1 Disconnect the navigation module electrical connector, NA07.
	2 Turn the ignition switch to the **ACC** position.
	3 Measure the voltage between NA07, pin 11 (YG) and GROUND.
	Is the voltage less than 10 volts? **Yes** REPAIR the circuit between the navigation module connector, NA07, pin 11 and the ignition switch. This circuit includes the central junction fuse box, fuse 69. For additional information, refer to the wiring diagrams. CLEAR the DTC, test the system for normal operation. **No** CHECK the module for GROUND. INSTALL a new navigation module. REFER to: Navigation System Module - 4-Door (419-07 Navigation System, Removal and Installation). CLEAR the DTC, test the system for normal operation.

PINPOINT TEST T : ONE OR MORE D2B MODULES NOT RESPONDING. IGNITION SWITCHED SUPPLY FAULT	
TEST CONDITIONS	**DETAILS/RESULTS/ACTIONS**
T1: CHECK THE IGNITION SWITCHED SUPPLY TO THE VOICE ACTIVATED CONTROL MODULE	
	1 Disconnect the voice activated control module connector, PH02.
	2 Turn the ignition switch to the **ON** position.
	3 Measure the voltage between PH02, pin 06 (WR) and GROUND.
	Is the voltage less than 10 volts? **Yes** REPAIR the circuit between the voice activated control module connector, PH02, pin 06 and the central junction fuse box, fuse 67. For additional information, refer to the wiring diagrams. CLEAR the DTC, test the system for normal operation. **No** GO to T2.
T2: CHECK THE IGNITION SWITCHED SUPPLY TO THE 'PHONE MODULE	
	1 Disconnect the 'phone module connector, PH01.
	2 Turn the ignition switch to the **ON** position.
	3 Measure the voltage between PH01, pin 29 (Y) and GROUND.

	Is the voltage less than 10 volts? **Yes** REPAIR the circuit between the 'phone module connector, PH01, pin 29 and the central junction fuse box, fuse 78. For additional information, refer to the wiring diagrams. CLEAR the DTC, test the system for normal operation. **No** Check the module for GROUND. INSTALL a new 'phone module. REFER to: Module - 4-Door (419-08 Cellular Phone, Removal and Installation). CLEAR the DTC, test the system for normal operation.

PINPOINT TEST U : IC SUPPLY OR GROUND FAULT	
TEST CONDITIONS	**DETAILS/RESULTS/ACTIONS**
U1: CHECK THE B+ SUPPLY TO THE IC	
	1 Disconnect the IC connector, IP11.
	2 Measure the voltage between IP11, pin 07 (OG) and GROUND.
	Is the voltage less than 10 volts? **Yes** REPAIR the circuit between IP11, pin 07 and battery. This circuit includes the primary junction box, fuse 45. For additional information, refer to the wiring diagrams. **No** GO to U2.
U2: CHECK THE ACC SUPPLY TO THE IC	
	1 Turn the ignition switch to the **ACC** position.
	2 Measure the voltage between IP11, pin 13 (YU) and GROUND.
	Is the voltage less than 10 volts? **Yes** REPAIR the circuit between IP11, pin 13 and battery. This circuit includes the primary junction box, fuse 43. For additional information, refer to the wiring diagrams. **No** GO to U3.
U3: CHECK THE IGNITION SUPPLY TO THE IC	
	1 Turn the ignition switch to the **IGN** position.
	2 Measure the voltage between IP11, pin 11 (GR) and GROUND.
	Is the voltage less than 10 volts? **Yes** REPAIR the circuit between IP11, pin 11 and battery. This circuit includes the primary junction box, fuse 54. For additional information, refer to the wiring diagrams. **No** GO to U4.
U4: CHECK THE GROUND TO THE IC	
	1 Measure the resistance between IP11, pin 08 (B) and GROUND.
	Is the resistance greater than 5 ohms? **Yes** REPAIR the high resistance circuit. For additional information, refer to the wiring diagrams. **No** No fault found with power or ground supplies. Check for DTCs indicating a module fault.

PINPOINT TEST V : SWRS SUPPLY OR GROUND FAULT	
TEST CONDITIONS	**DETAILS/RESULTS/ACTIONS**
V1: CHECK THE MODULE SUPPLY TO THE SWRS	
	1 Disconnect the SWRS connector, IP19.
	2 Turn the ignition switch to the **ON** position.
	3 Measure the voltage between IP19, pin 02 (GW) and GROUND.
	Is the voltage less than 4 volts? **Yes** GO to V2. **No** GO to V3.
V2: CHECK THE MODULE SUPPLY CIRCUIT TO THE SWRS FOR HIGH RESISTANCE	
	1 Turn the ignition switch to the **OFF** position.
	2 Disconnect the DSC module connector, JB185.
	3 Measure the resistance between IP19, pin 02 (GW) and JB185, pin 39 (GW).
	Is the resistance greater than 5 ohms? **Yes** REPAIR the high resistance circuit. For additional information, refer to the wiring diagrams. **No** GO to V3.
V3: CHECK THE GROUND TO THE SWRS	
	1 Reconnect the DSC module connector, JB185.
	2 Measure the resistance between IP19, pin 08 (U) and GROUND.
	Is the resistance greater than 5 ohms? **Yes** REPAIR the high resistance circuit. For additional information, refer to the wiring diagrams. **No** No fault found with power or ground supplies. Check for DTCs indicating a module fault.

PINPOINT TEST W : YAW RATE SENSOR SUPPLY OR GROUND FAULT	
TEST CONDITIONS	**DETAILS/RESULTS/ACTIONS**
W1: CHECK THE MODULE SUPPLY TO THE YAW RATE SENSOR	
	1 Disconnect the yaw rate sensor connector, IP20.
	2 Turn the ignition switch to the **ON** position.
	3 Measure the voltage between IP20, pin 04 (GW) and GROUND.

	Is the voltage less than 4 volts? **Yes** GO to W2. **No** GO to W3.
W2: CHECK THE MODULE SUPPLY CIRCUIT TO THE YAW RATE SENSOR FOR HIGH RESISTANCE	
	1 Turn the ignition switch to the **OFF** position.
	2 Disconnect the DSC module connector, JB185.
	3 Measure the resistance between IP20, pin 04 (GW) and JB185, pin 39 (GW).
	Is the resistance greater than 5 ohms? **Yes** REPAIR the high resistance circuit. For additional information, refer to the wiring diagrams. **No** GO to W3.
W3: CHECK THE GROUND TO THE YAW RATE SENSOR	
	1 Measure the resistance between IP20, pin 01 (U) and GROUND.
	Is the resistance greater than 5 ohms? **Yes** REPAIR the high resistance circuit. For additional information, refer to the wiring diagrams. **No** No fault found with power or ground supplies. Check for DTCs indicating a module fault.

PINPOINT TEST X : ABS/TCCM SUPPLY OR GROUND FAULT	
TEST CONDITIONS	**DETAILS/RESULTS/ACTIONS**
X1: CHECK THE IGNITION SUPPLY TO THE ABS/TC MODULE	
	1 Disconnect the ABS/TCCM connector, JB45.
	2 Turn the ignition switch to the **ON** position.
	3 Measure the voltage between JB45, pin 23 (GW) and GROUND.
	Is the voltage less than 10 volts? **Yes** REPAIR the circuit between JB45, pin 23 and battery. This circuit includes the front power distribution box, fuse 13 and the ignition relay. For additional information, refer to the wiring diagrams. **No** GO to X2.
X2: CHECK THE PUMP+ SUPPLY TO THE ABS/TCCM	
	1 Turn the ignition switch to the **ON** position.
	2 Measure the voltage between JB45, pin 02 (R) and GROUND.
	Is the voltage less than 10 volts? **Yes** REPAIR the circuit between JB45, pin 02 and battery. This circuit includes the front power distribution box, fuse 41. For additional information, refer to the wiring diagrams. **No** GO to X3.
X3: CHECK THE SOLENOID+ SUPPLY TO THE ABS/TCCM	
	1 Turn the ignition switch to the **ON** position.
	2 Measure the voltage between JB45, pin 06 (R) and GROUND.
	Is the voltage less than 10 volts? **Yes** REPAIR the circuit between JB45, pin 06 and battery. This circuit includes the front power distribution box, fuse 41. For additional information, refer to the wiring diagrams. **No** GO to X4.
X4: CHECK THE GROUND TO THE ABS/TCCM	
	1 Turn the ignition switch to the **OFF** position.
	2 Measure the resistance between JB45, pin 05 (B) and GROUND.
	Is the resistance greater than 5 ohms? **Yes** REPAIR the high resistance circuit. For additional information, refer to the wiring diagrams. **No** GO to X5.
X5: CHECK THE MOTOR GROUND TO THE ABS/TCCM	
	1 Measure the resistance between JB45, pin 01 (B) and GROUND.
	Is the resistance greater than 5 ohms? **Yes** REPAIR the high resistance circuit. For additional information, refer to the wiring diagrams. **No** No fault found with power or ground supplies. Check for DTCs indicating a module fault.

PINPOINT TEST Y : DSC MODULE SUPPLY OR GROUND FAULT	
TEST CONDITIONS	**DETAILS/RESULTS/ACTIONS**
Y1: CHECK THE IGNITION SUPPLY TO THE DSC MODULE	
	1 Disconnect the DSC module connector, JB185.
	2 Turn the ignition switch to the **ON** position.
	3 Measure the voltage between JB185, pin 23 (GW) and GROUND.
	Is the voltage less than 10 volts? **Yes** REPAIR the circuit between JB45, pin 23 and battery. This circuit includes the front power distribution box, fuse 13 and the ignition relay. For additional information, refer to the wiring diagrams. **No** GO to Y2.
Y2: CHECK THE PUMP+ SUPPLY TO THE DSC MODULE	
	1 Turn the ignition switch to the **ON** position.
	2 Measure the voltage between JB185, pin 02 (R) and GROUND.

	Is the voltage less than 10 volts? **Yes** REPAIR the circuit between JB185, pin 02 and battery. This circuit includes the front power distribution box, fuse 41. For additional information, refer to the wiring diagrams. **No** GO to Y3.
Y3: CHECK THE SOLENOID+ SUPPLY TO THE DSC MODULE	
	1 Turn the ignition switch to the **ON** position.
	2 Measure the voltage between JB185, pin 06 (R) and GROUND.
	Is the voltage less than 10 volts? **Yes** REPAIR the circuit between JB185, pin 06 and battery. This circuit includes the front power distribution box, fuse 41. For additional information, refer to the wiring diagrams. **No** GO to Y4.
Y4: CHECK THE GROUND TO THE DSC MODULE	
	1 Turn the ignition switch to the **OFF** position.
	2 Measure the resistance between JB185, pin 05 (B) and GROUND.
	Is the resistance greater than 5 ohms? **Yes** REPAIR the high resistance circuit. For additional information, refer to the wiring diagrams. **No** GO to Y5.
Y5: CHECK THE MOTOR GROUND TO THE DSC MODULE	
	1 Measure the resistance between JB185, pin 01 (B) and GROUND.
	Is the resistance greater than 5 ohms? **Yes** REPAIR the high resistance circuit. For additional information, refer to the wiring diagrams. **No** No fault found with power or ground supplies. Check for DTCs indicating a module fault.

PINPOINT TEST Z : GSI MODULE SUPPLY OR GROUND FAULT

TEST CONDITIONS	DETAILS/RESULTS/ACTIONS
Z1: CHECK THE IGNITION SUPPLY TO THE GSI MODULE	
	1 Disconnect the GSI module connector, IP14.
	2 Turn the ignition switch to the **ON** position.
	3 Measure the voltage between IP14, pin 01 (WR) and GROUND.
	Is the voltage less than 10 volts? **Yes** REPAIR the circuit between IP14, pin 01 and battery. This circuit includes the primary junction box, fuse 50. For additional information, refer to the wiring diagrams. **No** GO to Z2.
Z2: CHECK THE GROUND TO THE GSI MODULE	
	1 Measure the resistance between IP14, pin 02 (B) and GROUND.
	Is the resistance greater than 5 ohms? **Yes** REPAIR the high resistance circuit. For additional information, refer to the wiring diagrams. **No** No fault found with power or ground supplies. Check for DTCs indicating a module fault.

PINPOINT TEST AA : HID MODULE SUPPLY OR GROUND FAULT

TEST CONDITIONS	DETAILS/RESULTS/ACTIONS
AA1: CHECK THE IGNITION SUPPLY TO THE HID MODULE	
	1 Disconnect the HID module connector, IP130.
	2 Turn the ignition switch to the **ON** position.
	3 Measure the voltage between IP130, pin 23 (WR) and GROUND.
	Is the voltage less than 10 volts? **Yes** REPAIR the circuit between IP130, pin 23 and battery. This circuit includes the primary junction box, fuse 39. For additional information, refer to the wiring diagrams. **No** GO to AA2.
AA2: CHECK THE GROUND TO THE HID MODULE	
	1 Measure the resistance between IP130, pin 24 (B) and GROUND.
	Is the resistance greater than 5 ohms? **Yes** REPAIR the high resistance circuit. For additional information, refer to the wiring diagrams. **No** No fault found with power or ground supplies. Check for DTCs indicating a module fault.

PINPOINT TEST AB : EATC MODULE SUPPLY OR GROUND FAULT

TEST CONDITIONS	DETAILS/RESULTS/ACTIONS
AB1: CHECK THE B+ SUPPLY TO THE EATC MODULE	
	1 Disconnect the EATC module connector, IP101.
	2 Measure the voltage between IP101, pin 14 (OG) and GROUND.
	Is the voltage less than 10 volts? **Yes** REPAIR the circuit between IP101, pin 14 and battery. This circuit includes the primary junction box, fuse 45. For additional information, refer to the wiring diagrams. **No** GO to AB2.
AB2: CHECK THE IGNITION SUPPLY TO THE EATC MODULE	

	1 Turn the ignition switch to the **ON** position.
	2 Measure the voltage between IP101, pin 02 (WR) and GROUND.
	Is the voltage less than 10 volts? **Yes** REPAIR the circuit between IP101, pin 02 and battery. This circuit includes the primary junction box, fuse 39, and the ignition relay. For additional information, refer to the wiring diagrams. **No** GO to AB3.
AB3: CHECK THE B+ SAVE SUPPLY TO THE EATC MODULE	
	1 Turn the ignition switch to the **OFF** position.
	2 Measure the voltage between IP101, pin 01 (OY) and GROUND.
	Is the voltage less than 10 volts? **Yes** REPAIR the circuit between IP101, pin 01 and battery. This circuit includes the primary junction box, fuse 49, and the battery save relay. For additional information, refer to the wiring diagrams. **No** GO to AB4.
AB4: CHECK THE GROUND TO THE EATC MODULE	
	1 Measure the resistance between IP101, pin 15 (B) and GROUND.
	Is the resistance greater than 5 ohms? **Yes** REPAIR the high resistance circuit. For additional information, refer to the wiring diagrams. **No** No fault found with power or ground supplies. Check for DTCs indicating a module fault.

PINPOINT TEST AC : MEMORY SEAT MODULE SUPPLY OR GROUND FAULT

TEST CONDITIONS	DETAILS/RESULTS/ACTIONS
AC1: CHECK THE B+1 SUPPLY TO THE MEMORY SEAT MODULE	
	1 Disconnect the memory seat module connector, DM02.
	2 Measure the voltage between DM02, pin 01 (OG) and GROUND.
	Is the voltage less than 10 volts? **Yes** REPAIR the circuit between DM02, pin 01 and battery. This circuit includes the primary junction box, fuse 16. For additional information, refer to the wiring diagrams. **No** GO to AC2.
AC2: CHECK THE B+2 SUPPLY TO THE MEMORY SEAT MODULE	
	1 Measure the voltage between DM02, pin 06 (GB) and GROUND.
	Is the voltage less than 10 volts? **Yes** REPAIR the circuit between DM02, pin 06 and battery. This circuit includes the primary junction box, fuse 09. For additional information, refer to the wiring diagrams. **No** GO to AC3.
AC3: CHECK THE IGNITION SUPPLY TO THE MEMORY SEAT MODULE	
	1 Turn the ignition switch to the **ON** position.
	2 Measure the voltage between DM02, pin 04 (GB) and GROUND.
	Is the voltage less than 4 volts? **Yes** REPAIR the circuit between DM02, pin 04 and battery. This circuit includes the primary junction box, fuse 07. For additional information, refer to the wiring diagrams. **No** GO to AC4.
AC4: CHECK THE ELECTRONIC GROUND TO THE MEMORY SEAT MODULE	
	1 Turn the ignition switch to the **OFF** position.
	2 Measure the resistance between DM02, pin 10 (B) and GROUND.
	Is the resistance greater than 5 ohms? **Yes** REPAIR the high resistance circuit. For additional information, refer to the wiring diagrams. **No** GO to AC5.
AC5: CHECK THE POWER GROUND TO THE MEMORY SEAT MODULE	
	1 Measure the resistance between DM02, pin 05 (B) and GROUND.
	Is the resistance greater than 5 ohms? **Yes** REPAIR the high resistance circuit. For additional information, refer to the wiring diagrams. **No** GO to AC6.
AC6: CHECK THE SIGNAL GROUND TO THE MEMORY SEAT MODULE	
	1 Measure the resistance between DM02, pin 03 (B) and GROUND.
	Is the resistance greater than 5 ohms? **Yes** REPAIR the high resistance circuit. For additional information, refer to the wiring diagrams. **No** No fault found with power or ground supplies. Check for DTCs indicating a module fault.

PINPOINT TEST AD : TCM (16 BIT) SUPPLY OR GROUND FAULT

TEST CONDITIONS	DETAILS/RESULTS/ACTIONS
AD1: CHECK THE B+ SUPPLY TO THE TCM	
	1 Disconnect the TCM connector, JB131.
	2 Measure the voltage between JB131, pin 06 (UY) and GROUND.

	Is the voltage less than 10 volts? **Yes** REPAIR the circuit between JB131, pin 06 and battery. This circuit includes the front power distribution box, fuse 32. For additional information, refer to the wiring diagrams. **No** GO to AD2.
AD2: CHECK THE IGNITION 1 SUPPLY TO THE TCM	
	1 Turn the ignition switch to the **ON** position.
	2 Measure the voltage between JB131, pin 36 (WU) and GROUND.
	Is the voltage less than 10 volts? **Yes** REPAIR the circuit between JB131, pin 36 and battery. This circuit includes the front power distribution box, fuse 11, and the ignition relay. For additional information, refer to the wiring diagrams. **No** GO to AD3.
AD3: CHECK THE IGNITION 2 SUPPLY TO THE TCM	
	1 Turn the ignition switch to the **ON** position.
	2 Measure the voltage between JB131, pin 54 (WU) and GROUND.
	Is the voltage less than 10 volts? **Yes** REPAIR the circuit between JB131, pin 54 and battery. This circuit includes the front power distribution box, fuse 11, and the ignition relay. For additional information, refer to the wiring diagrams. **No** GO to AD4.
AD4: CHECK THE GROUND 1 TO THE TCM	
	1 Turn the ignition switch to the **OFF** position.
	2 Measure the resistance between JB131, pin 09 (B) and GROUND.
	Is the resistance greater than 5 ohms? **Yes** REPAIR the high resistance circuit. For additional information, refer to the wiring diagrams. **No** GO to AD5.
AD5: CHECK THE GROUND 2 TO THE TCM	
	1 Measure the resistance between JB131, pin 38 (B) and GROUND.
	Is the resistance greater than 5 ohms? **Yes** REPAIR the high resistance circuit. For additional information, refer to the wiring diagrams. **No** No fault found with power or ground supplies. Check for DTCs indicating a module fault.

PINPOINT TEST AE : TCM (32 BIT) SUPPLY OR GROUND FAULT	
TEST CONDITIONS	**DETAILS/RESULTS/ACTIONS**
AE1: CHECK THE B+ SUPPLY TO THE TCM	
	1 Disconnect the TCM connector, JB231.
	2 Measure the voltage between JB231, pin 28 (UY) and GROUND.
	Is the voltage less than 10 volts? **Yes** REPAIR the circuit between JB231, pin 28 and battery. This circuit includes the front power distribution box, fuse 32. For additional information, refer to the wiring diagrams. **No** GO to AE2.
AE2: CHECK THE IGNITION 1 SUPPLY TO THE TCM	
	1 Turn the ignition switch to the **ON** position.
	2 Measure the voltage between JB231, pin 10 (WU) and GROUND.
	Is the voltage less than 10 volts? **Yes** REPAIR the circuit between JB231, pin 10 and battery. This circuit includes the front power distribution box, fuse 11, and the ignition relay. For additional information, refer to the wiring diagrams. **No** GO to AE3.
AE3: CHECK THE IGNITION 2 SUPPLY TO THE TCM	
	1 Turn the ignition switch to the **ON** position.
	2 Measure the voltage between JB231, pin 19 (WU) and GROUND.
	Is the voltage less than 10 volts? **Yes** REPAIR the circuit between JB231, pin 19 and battery. This circuit includes the front power distribution box, fuse 11, and the ignition relay. For additional information, refer to the wiring diagrams. **No** GO to AE4.
AE4: CHECK THE GROUND 1 TO THE TCM	
	1 Turn the ignition switch to the **OFF** position.
	2 Measure the resistance between JB231, pin 25 (B) and GROUND.
	Is the resistance greater than 5 ohms? **Yes** REPAIR the high resistance circuit. For additional information, refer to the wiring diagrams. **No** GO to AE5.
AE5: CHECK THE GROUND 2 TO THE TCM	
	1 Measure the resistance between JB231, pin 38 (B) and GROUND.
	Is the resistance greater than 5 ohms? **Yes** REPAIR the high resistance circuit. For additional information, refer to the wiring diagrams. **No** No fault found with power or ground supplies. Check for DTCs indicating a module fault.

PINPOINT TEST AF : ECM SUPPLY OR GROUND FAULT (VEHICLES WITH 2.0L PETROL ENGINE)

TEST CONDITIONS	DETAILS/RESULTS/ACTIONS
AF1: CHECK THE B+ SUPPLY TO THE ECM	
	1 Turn the ignition switch to the **OFF** position.
	2 Disconnect the ECM connector, EN65.
	3 Measure the voltage between EN65, pin 21 (NR) and GROUND.
	Is the voltage less than 10 volts? **Yes** REPAIR the circuit between EN65, pin 21 and battery. This circuit includes the front power distribution box, fuse 36. For additional information, refer to the wiring diagrams. **No** GO to AF2.
AF2: CHECK THE CONTROL SUPPLY TO THE ECM	
	1 Turn the ignition switch to the **ON** position.
	2 Measure the voltage between EN65, pin 69 (B) and GROUND.
	Is the voltage less than 10 volts? **Yes** REPAIR the circuit between EN65, pin 69 and battery. This circuit includes the EMS control relay, pin 2. For additional information, refer to the wiring diagrams. **No** GO to AF3.
AF3: CHECK THE POWER GROUND (1) TO THE ECM	
	1 Turn the ignition switch to the **OFF** position.
	2 Measure the resistance between EN65, pin 19 (B) and GROUND.
	Is the resistance greater than 5 ohms? **Yes** REPAIR the high resistance circuit. For additional information, refer to the wiring diagrams. **No** GO to AF4.
AF4: CHECK THE POWER GROUND (2) TO THE ECM	
	1 Measure the resistance between EN65, pin 18 (B) and GROUND.
	Is the resistance greater than 5 ohms? **Yes** REPAIR the high resistance circuit. For additional information, refer to the wiring diagrams. **No** No fault found with power or ground supplies. Check for DTCs indicating a module fault.

PINPOINT TEST AG : ECM SUPPLY OR GROUND FAULT (VEHICLES WITH 2.5/3.0L PETROL ENGINE)

TEST CONDITIONS	DETAILS/RESULTS/ACTIONS
AG1: CHECK THE B+ SUPPLY TO THE ECM	
	1 Turn the ignition switch to the **OFF** position.
	2 Disconnect the ECM connector, EN16.
	3 Measure the voltage between EN16, pin 22 (NR) and GROUND.
	Is the voltage less than 10 volts? **Yes** REPAIR the circuit between EN16, pin 22 and battery. This circuit includes the front power distribution box, fuse 36. For additional information, refer to the wiring diagrams. **No** GO to AG2.
AG2: CHECK THE CONTROL SUPPLY TO THE ECM	
	1 Turn the ignition switch to the **ON** position.
	2 Measure the voltage between EN16, pin 40 (B) and GROUND.
	Is the voltage less than 10 volts? **Yes** REPAIR the circuit between EN16, pin 40 and battery. This circuit includes the EMS control relay, pin 02. For additional information, refer to the wiring diagrams. **No** GO to AG3.
AG3: CHECK THE POWER GROUND (1) TO THE ECM	
	1 Turn the ignition switch to the **OFF** position.
	2 Measure the resistance between EN16, pin 04 (B) and GROUND.
	Is the resistance greater than 5 ohms? **Yes** REPAIR the high resistance circuit. For additional information, refer to the wiring diagrams. **No** GO to AG4.
AG4: CHECK THE POWER GROUND (2) TO THE ECM	
	1 Measure the resistance between EN16, pin 05 (B) and GROUND.
	Is the resistance greater than 5 ohms? **Yes** REPAIR the high resistance circuit. For additional information, refer to the wiring diagrams. **No** No fault found with power or ground supplies. Check for DTCs indicating a module fault.

PINPOINT TEST AH : ECM SUPPLY OR GROUND FAULT (VEHICLES WITH 2.0L DIESEL ENGINE)

TEST CONDITIONS	DETAILS/RESULTS/ACTIONS
AH1: CHECK THE B+ SUPPLY TO THE ECM	
	1 Turn the ignition switch to the **OFF** position.
	2 Disconnect the ECM connector, DL01.
	3 Measure the voltage between DL01, pin 03 (WG) and GROUND.

	Is the voltage less than 10 volts? **Yes** REPAIR the circuit between DL01, pin 03 and battery. This circuit includes the front power distribution box, fuse 21, and the EMS control relay. For additional information, refer to the wiring diagrams. **No** GO to AH2.
AH2: CHECK THE CONTROL SUPPLY TO THE ECM	
	1 Turn the ignition switch to the **ON** position.
	2 Measure the voltage between DL01, pin 09 (B) and GROUND.
	Is the voltage less than 10 volts? **Yes** REPAIR the circuit between DL01, pin 09 and battery. This circuit includes the EMS control relay, pin 02. For additional information, refer to the wiring diagrams. **No** GO to AH3.
AH3: CHECK THE POWER GROUND (1) TO THE ECM	
	1 Turn the ignition switch to the **OFF** position.
	2 Measure the resistance between DL01, pin 01 (B) and GROUND.
	Is the resistance greater than 5 ohms? **Yes** REPAIR the high resistance circuit. For additional information, refer to the wiring diagrams. **No** GO to AH4.
AH4: CHECK THE POWER GROUND (2) TO THE ECM	
	1 Measure the resistance between DL01, pin 02 (B) and GROUND.
	Is the resistance greater than 5 ohms? **Yes** REPAIR the high resistance circuit. For additional information, refer to the wiring diagrams. **No** GO to AH5.
AH5: CHECK THE POWER GROUND (3) TO THE ECM	
	1 Measure the resistance between DL01, pin 28 (B) and GROUND.
	Is the resistance greater than 5 ohms? **Yes** REPAIR the high resistance circuit. For additional information, refer to the wiring diagrams. **No** GO to AH6.
AH6: CHECK THE POWER GROUND (4) TO THE ECM	
	1 Measure the resistance between DL01, pin 66 (B) and GROUND.
	Is the resistance greater than 5 ohms? **Yes** REPAIR the high resistance circuit. For additional information, refer to the wiring diagrams. **No** GO to AH7.
AH7: CHECK THE POWER GROUND (5) TO THE ECM	
	1 Measure the resistance between DL01, pin 88 (B) and GROUND.
	Is the resistance greater than 5 ohms? **Yes** REPAIR the high resistance circuit. For additional information, refer to the wiring diagrams. **No** No fault found with power or ground supplies. Check for DTCs indicating a module fault.

PINPOINT TEST AI : ICE SUPPLY OR GROUND FAULT

TEST CONDITIONS	DETAILS/RESULTS/ACTIONS
AI1: CHECK THE B+ SUPPLY TO THE ICE	
	1 Turn the ignition switch to the **OFF** position.
	2 Disconnect the ICE connector, IP65.
	3 Measure the voltage between IP65, pin 11 (NW) and GROUND.
	Is the voltage less than 10 volts? **Yes** REPAIR the circuit between IP65, pin 11 and battery. This circuit includes the primary junction box, fuse 44. For additional information, refer to the wiring diagrams. **No** GO to AI2.
AI2: CHECK THE ACC SUPPLY TO THE ICE	
	1 Turn the ignition switch to the **ACC** position.
	2 Measure the voltage between IP65, pin 02 (YG) and GROUND.
	Is the voltage less than 10 volts? **Yes** REPAIR the circuit between IP65, pin 02 and battery. This circuit includes the primary junction box, fuse 43. For additional information, refer to the wiring diagrams. **No** GO to AI3.
AI3: CHECK THE GROUND TO THE ICE	
	1 Turn the ignition switch to the **OFF** position.
	2 Measure the resistance between IP65, pin 01 (B) and GROUND.
	Is the resistance greater than 5 ohms? **Yes** REPAIR the high resistance circuit. For additional information, refer to the wiring diagrams. **No** No fault found with power or ground supplies. Check for DTCs indicating a module fault.

PINPOINT TEST AJ : CD CHANGER SUPPLY OR GROUND FAULT

TEST CONDITIONS	DETAILS/RESULTS/ACTIONS

AJ1: CHECK THE B+ SUPPLY TO THE CD CHANGER	
	1 Turn the ignition switch to the **OFF** position.
	2 Disconnect the CD changer connector, CA301.
	3 Measure the voltage between CA301, pin 02 (OY) and GROUND.
	Is the voltage less than 10 volts? **Yes** REPAIR the circuit between CA301, pin 02 and battery. This circuit includes the primary junction box, fuse 44. For additional information, refer to the wiring diagrams. **No** GO to AJ2.
AJ2: CHECK THE GROUND TO THE CD CHANGER	
	1 Measure the resistance between CA301, pin 01 (B) and GROUND.
	Is the resistance greater than 5 ohms? **Yes** REPAIR the high resistance circuit. For additional information, refer to the wiring diagrams. **No** No fault found with power or ground supplies. Check for DTCs indicating a module fault.

PINPOINT TEST AK : NAV MODULE SUPPLY OR GROUND FAULT	
TEST CONDITIONS	**DETAILS/RESULTS/ACTIONS**
AK1: CHECK THE B+ SUPPLY TO THE NAV MODULE	
	1 Turn the ignition switch to the **OFF** position.
	2 Disconnect the NAV module connector, NA07.
	3 Measure the voltage between NA07, pin 01 (OY) and GROUND.
	Is the voltage less than 10 volts? **Yes** REPAIR the circuit between NA07, pin 01 and battery. This circuit includes the primary junction box, fuse 44. For additional information, refer to the wiring diagrams. **No** GO to AK2.
AK2: CHECK THE ACC SUPPLY TO THE NAV MODULE	
	1 Turn the ignition switch to the **ACC** position.
	2 Measure the voltage between NA07, pin 11 (YG) and GROUND.
	Is the voltage less than 10 volts? **Yes** REPAIR the circuit between NA07, pin 11 and battery. This circuit includes the primary junction box, fuse 43. For additional information, refer to the wiring diagrams. **No** GO to AK3.
AK3: CHECK THE GROUND TO THE NAV MODULE	
	1 Turn the ignition switch to the **OFF** position.
	2 Measure the resistance between NA07, pin 02 (B) and GROUND.
	Is the resistance greater than 5 ohms? **Yes** REPAIR the high resistance circuit. For additional information, refer to the wiring diagrams. **No** No fault found with power or ground supplies. Check for DTCs indicating a module fault.

PINPOINT TEST AL : FFH MODULE SUPPLY OR GROUND FAULT	
TEST CONDITIONS	**DETAILS/RESULTS/ACTIONS**
AL1: CHECK THE B+ SUPPLY TO THE FFH MODULE	
	1 Turn the ignition switch to the **OFF** position.
	2 Disconnect the FFH module connector, JB232.
	3 Measure the voltage between JB232, pin 01 (GR) and GROUND.
	Is the voltage less than 10 volts? **Yes** REPAIR the circuit between JB232, pin 01 and battery. This circuit includes the front power distribution box, fuse 31. For additional information, refer to the wiring diagrams. **No** GO to AL2.
AL2: CHECK THE IGNITION SUPPLY TO THE FFH MODULE	
	1 Turn the ignition switch to the **ON** position.
	2 Measure the voltage between JB232, pin 04 (RW) and GROUND.
	Is the voltage less than 10 volts? **Yes** REPAIR the circuit between JB232, pin 04 and battery. This circuit includes the front power distribution box, fuse 12. For additional information, refer to the wiring diagrams. **No** GO to AL3.
AL3: CHECK THE GROUND TO THE FFH MODULE	
	1 Turn the ignition switch to the **OFF** position.
	2 Measure the resistance between JB232, pin 02 (B) and GROUND.
	Is the resistance greater than 5 ohms? **Yes** REPAIR the high resistance circuit. For additional information, refer to the wiring diagrams. **No** No fault found with power or ground supplies. Check for DTCs indicating a module fault.

PINPOINT TEST AM : PARK AID MODULE SUPPLY OR GROUND FAULT	
TEST CONDITIONS	**DETAILS/RESULTS/ACTIONS**
AM1: CHECK THE IGNITION SUPPLY TO THE PARK AID MODULE	
	1 Turn the ignition switch to the **OFF** position.

	2 Disconnect the park aid module connector, CA418.
	3 Turn the ignition switch to the **ON** position.
	4 Measure the voltage between CA418, pin 01 (N) and GROUND.
	Is the voltage less than 10 volts? **Yes** REPAIR the circuit between CA418, pin 01 and battery. This circuit includes the primary junction box, fuse 33 and the ignition relay. For additional information, refer to the wiring diagrams. **No** GO to AM2.
AM2: CHECK THE GROUND TO THE PARK AID MODULE	
	1 Turn the ignition switch to the **OFF** position.
	2 Measure the resistance between CA418, pin 16 (B) and GROUND.
	Is the resistance greater than 5 ohms? **Yes** REPAIR the high resistance circuit. For additional information, refer to the wiring diagrams. **No** No fault found with power or ground supplies. Check for DTCs indicating a module fault.

PINPOINT TEST AN : RCM SUPPLY OR GROUND FAULT	
TEST CONDITIONS	**DETAILS/RESULTS/ACTIONS**
AN1: CHECK THE IGNITION SUPPLY TO THE RCM	
	1 Turn the ignition switch to the **OFF** position.
	2 Disconnect the RCM connector, IP74.
	3 Turn the ignition switch to the **ON** position.
	4 Measure the voltage between IP74, pin 12 (G) and GROUND.
	Is the voltage less than 10 volts? **Yes** REPAIR the circuit between IP74, pin 12 and battery. This circuit includes the primary junction box, fuse 53 and the ignition relay. For additional information, refer to the wiring diagrams. **No** GO to AN2.
AN2: CHECK THE GROUND TO THE RCM	
	1 Turn the ignition switch to the **OFF** position.
	2 Measure the resistance between IP74, pin 16 (B) and GROUND.
	Is the resistance greater than 5 ohms? **Yes** REPAIR the high resistance circuit. For additional information, refer to the wiring diagrams. **No** No fault found with power or ground supplies. Check for DTCs indicating a module fault.

PINPOINT TEST AO : GEM SUPPLY FAULT	
TEST CONDITIONS	**DETAILS/RESULTS/ACTIONS**
AO1: CHECK THE B+ SUPPLY TO THE GEM	
	1 Disconnect the GEM connector, JB172.
	2 Measure the voltage between JB172, pin 01 (OY) and GROUND.
	Is the voltage less than 10 volts? **Yes** REPAIR the circuit between JB172, pin 01 and battery. This circuit includes the primary junction box, fuse 22. For additional information, refer to the wiring diagrams. **No** No fault found with power supplies. Check for DTCs indicating a module fault.

PINPOINT TEST AP : RESTRAINTS CONTROL MODULE (RCM) ISO CIRCUIT MALFUNCTION	
WARNING: To avoid accidental deployment and possible injury, the backup power supply must be depleted before repairing or replacing any airbag supplemental restraint system (SRS) components. To deplete the backup power supply energy, disconnect the battery ground cable and wait one minute. Failure to follow this instruction may result in personal injury.	
TEST CONDITIONS	**DETAILS/RESULTS/ACTIONS**
AP1: CHECK THE RCM FOR DAMAGE	
	1 Inspect the RCM for damage.
	Does the RCM indicate signs of damage? **Yes** INSTALL a new RCM. REFER to: Restraints Control Module (RCM) (501-20B Supplemental Restraint System, Removal and Installation). CLEAR the DTC, test the system for normal operation. **No** GO to AP2.
AP2: CHECK K-LINE FOR SHORT CIRCUIT TO GROUND	
	1 Measure the resistance between diagnostic connector, pin 07 (W) and GROUND.
	Is the resistance less than 10,000 ohms? **Yes** REPAIR the short circuit. For additional information, refer to the wiring diagrams. CLEAR the DTC, test the system for normal operation. **No** GO to AP3.
AP3: CHECK K-LINE FOR SHORT CIRCUIT TO BATTERY	
	1 Measure the resistance between diagnostic connector, pins 07 (W) and pin 16 (OY).
	Is the resistance less than 10,000 ohms? **Yes** REPAIR the short circuit. For additional information, refer to the wiring diagrams. CLEAR the DTC, test the system for normal operation. **No** GO to AP4.

AP4: CHECK FOR OPEN CIRCUIT ON K-LINE BETWEEN DIAGNOSTIC CONNECTOR AND RCM	
	1 Turn the ignition switch to the **OFF** position.
	2 Disconnect the battery negative terminal.
	3 Disconnect the RCM connector, IP74.
	4 Measure the resistance between diagnostic connector, pin 07 (W) (K-line) and IP74, pin 11 (W).
	Is the resistance greater than 5 ohms? **Yes** REPAIR the high resistance circuit. For additional information, refer to the wiring diagrams. CLEAR the DTC, test the system for normal operation. **No** INSTALL a new RCM. REFER to: Restraints Control Module (RCM) (501-20B Supplemental Restraint System, Removal and Installation). CLEAR the DTC, test the system for normal operation.

PINPOINT TEST AQ : HEADLAMP LEVELLING MODULE (HID) ISO CIRCUIT MALFUNCTION

TEST CONDITIONS	DETAILS/RESULTS/ACTIONS
AQ1: CHECK HEADLAMP LEVELLING MODULE FOR DAMAGE	
	1 Inspect the HID module for damage.
	Does the HID module indicate signs of damage? **Yes** INSTALL a new HID module. REFER to: Headlamp Leveling Module (417-01 Exterior Lighting, Removal and Installation). CLEAR the DTC, test the system for normal operation. **No** GO to AQ2.
AQ2: CHECK K-LINE FOR SHORT CIRCUIT TO GROUND	
	1 Measure the resistance between diagnostic connector, pin 07 (W) and GROUND.
	Is the resistance less than 10,000 ohms? **Yes** REPAIR the short circuit. For additional information, refer to the wiring diagrams. CLEAR the DTC, test the system for normal operation. **No** GO to AQ3.
AQ3: CHECK K-LINE FOR SHORT CIRCUIT TO BATTERY	
	1 Measure the resistance between diagnostic connector, pins 07 (W) and pin 16 (OY).
	Is the resistance less than 10,000 ohms? **Yes** REPAIR the short circuit. For additional information, refer to the wiring diagrams. CLEAR the DTC, test the system for normal operation. **No** GO to AQ4.
AQ4: CHECK FOR OPEN CIRCUIT ON K-LINE BETWEEN DIAGNOSTIC CONNECTOR AND HID MODULE	
	1 Disconnect the HID module connector, IP130.
	2 Measure the resistance between diagnostic connector, pin 07 (W) and IP130, pin 05 (W).
	Is the resistance greater than 5 ohms? **Yes** REPAIR the high resistance circuit. For additional information, refer to the wiring diagrams. CLEAR the DTC, test the system for normal operation. **No** INSTALL a new HID module. REFER to: Headlamp Leveling Module (417-01 Exterior Lighting, Removal and Installation). CLEAR the DTC, test the system for normal operation.

PINPOINT TEST AR : ROOF CONSOLE ISO CIRCUIT MALFUNCTION

• NOTE: There are two levels of Roof Console. High-line, with moon roof, and/or reading lamps, plus VEMS and/or garage door opener (electrical connector, RC22). Low-line, with moon roof and/or reading lamps only (electrical connector, RC33).

TEST CONDITIONS	DETAILS/RESULTS/ACTIONS
AR1: CHECK ROOF CONSOLE MODULE FOR DAMAGE	
	1 Inspect the roof console module for damage.
	Does the roof console module indicate signs of damage? **Yes** INSTALL a new roof console module. CLEAR the DTC, test the system for normal operation. **No** GO to AR2.
AR2: CHECK K-LINE FOR SHORT CIRCUIT TO GROUND	
	1 Measure the resistance between diagnostic connector, pin 07 (W) and GROUND.
	Is the resistance less than 10,000 ohms? **Yes** REPAIR the short circuit. For additional information, refer to the wiring diagrams. CLEAR the DTC, test the system for normal operation. **No** GO to AR3.
AR3: CHECK K-LINE FOR SHORT CIRCUIT TO BATTERY	
	1 Measure the resistance between diagnostic connector, pin 07 (W) and pin 16 (OY).
	Is the resistance less than 10,000 ohms? **Yes** REPAIR the short circuit. For additional information, refer to the wiring diagrams. CLEAR the DTC, test the system for normal operation. **No** GO to AR4.
AR4: CHECK FOR OPEN CIRCUIT ON K-LINE BETWEEN THE DIAGNOSTIC CONNECTOR AND THE ROOF CONSOLE MODULE	
	1 Turn the ignition switch to the **OFF** position.
	2 Disconnect the battery negative terminal.
	3 Disconnect the roof console module connector (RC23, high-line, RC33, low-line).

	4 Measure the resistance between the diagnostic connector, pin 07 (W) and: Vehicles with low-line console - • RC23, pin 08 (W). Vehicles with high-line console - • RC33, pin 03 (W).
	Is the resistance greater than 5 ohms? **Yes** REPAIR the high resistance circuit. For additional information, refer to the wiring diagrams. CLEAR the DTC, test the system for normal operation. **No** INSTALL a new roof console module. CLEAR the DTC, test the system for normal operation.

PINPOINT TEST AS : REVERSE PARK AID ISO CIRCUIT MALFUNCTION	
TEST CONDITIONS	**DETAILS/RESULTS/ACTIONS**
AS1: CHECK THE REVERSE PARK AID MODULE FOR DAMAGE	
	1 Inspect the reverse park aid module for damage.
	Does the reverse park aid module indicate signs of damage? **Yes** INSTALL a new reverse park aid module. REFER to: Parking Aid Module - 4-Door (413-13 Parking Aid, Removal and Installation). CLEAR the DTC, test the system for normal operation. **No** GO to AS2.
AS2: CHECK K-LINE FOR SHORT CIRCUIT TO GROUND	
	1 Measure the resistance between diagnostic connector, pin 07 (W) and GROUND.
	Is the resistance less than 10,000 ohms? **Yes** REPAIR the short circuit. For additional information, refer to the wiring diagrams. CLEAR the DTC, test the system for normal operation. **No** GO to AS3.
AS3: CHECK K-LINE FOR SHORT CIRCUIT TO BATTERY	
	1 Measure the resistance between diagnostic connector, pin 07 (W) and pin 16 (OY).
	Is the resistance less than 10,000 ohms? **Yes** REPAIR the short circuit. For additional information, refer to the wiring diagrams. CLEAR the DTC, test the system for normal operation. **No** GO to AS4.
AS4: CHECK FOR OPEN CIRCUIT ON K-LINE BETWEEN THE DIAGNOSTIC CONNECTOR AND THE REVERSE PARK AID MODULE	
	1 Turn the ignition switch to the **OFF** position.
	2 Disconnect the battery negative terminal.
	3 Disconnect the reverse park aid module connector, RB07.
	4 Measure the resistance between diagnostic connector, pin 07 (W) and RB07, pin 05 (W).
	Is the resistance greater than 5 ohms? **Yes** REPAIR the high resistance circuit. For additional information, refer to the wiring diagrams. CLEAR the DTC, test the system for normal operation. **No** INSTALL a new reverse park aid module. REFER to: Parking Aid Module - 4-Door (413-13 Parking Aid, Removal and Installation). CLEAR the DTC, test the system for normal operation.

PINPOINT TEST AT : ECM ISO CIRCUIT MALFUNCTION	
• NOTE: These pinpoint tests apply only to OBD2 diagnostics. The ECM does most of it's diagnostics via CAN.	
TEST CONDITIONS	**DETAILS/RESULTS/ACTIONS**
AT1: CHECK ECM FOR DAMAGE	
	1 Inspect the ECM for damage.
	Does the ECM indicate signs of damage? **Yes** Please check part is not on any form of prior authorisation before replacement. **No** GO to AT2.
AT2: CHECK K-LINE FOR SHORT CIRCUIT TO GROUND	
	1 Measure the resistance between the diagnostic connector, pin 07 (W) and GROUND.
	Is the resistance less than 10,000 ohms? **Yes** REPAIR the short circuit. For additional information, refer to the wiring diagrams. CLEAR the DTC, test the system for normal operation. **No** GO to AT3.
AT3: CHECK K-LINE FOR SHORT CIRCUIT TO BATTERY	
	1 Measure the resistance between the diagnostic connector, pins 07 (W) and 16 (OY).
	Is the resistance less than 10,000 ohms? **Yes** REPAIR the short circuit. For additional information, refer to the wiring diagrams. CLEAR the DTC, test the system for normal operation. **No** GO to AT4.
AT4: CHECK FOR OPEN CIRCUIT ON K-LINE BETWEEN THE DIAGNOSTIC CONNECTOR AND THE ECM	
• NOTE: The diesel ECM is not part of the ISO network.	

	1 Turn the ignition switch to the **OFF** position.
	2 Disconnect the battery negative terminal. Vehicles with 2.5 and 3.0L engine - ● Disconnect the ECM connector, EN16. ● Measure the resistance between the diagnostic connector, pin 07 (W) and EN16, pin 105 (W). Vehicles with 2.0L petrol engine - ● Disconnect the ECM connector, EN65. ● Measure the resistance between the diagnostic connector, pin 07 (W) and EN65, pin 39 (W).
	Is the resistance greater than 5 ohms? **Yes** REPAIR the high resistance circuit. For additional information, refer to the wiring diagrams. CLEAR the DTC, test the system for normal operation. **No** Please check part is not on any form of prior authorisation before replacement.

PINPOINT TEST AU : FUEL FIRED HEATER (FFH) MODULE ISO CIRCUIT MALFUNCTION

TEST CONDITIONS	DETAILS/RESULTS/ACTIONS
AU1: CHECK THE FFH MODULE FOR DAMAGE	
	1 Inspect the FFH module for damage.
	Does the FFH module indicate signs of damage? **Yes** Please check part is not on any form of prior authorisation before replacement. **No** GO to AU2.
AU2: CHECK K-LINE FOR SHORT CIRCUIT TO GROUND	
	1 Measure the resistance between the diagnostic connector, pin 07 (W) and GROUND.
	Is the resistance less than 10,000 ohms? **Yes** REPAIR the short circuit. For additional information, refer to the wiring diagrams. CLEAR the DTC, test the system for normal operation. **No** GO to AU3.
AU3: CHECK K-LINE FOR SHORT CIRCUIT TO BATTERY	
	1 Measure the resistance between the diagnostic connector, pins 07 (W) and 16 (OY).
	Is the resistance less than 10,000 ohms? **Yes** REPAIR the short circuit. For additional information, refer to the wiring diagrams. CLEAR the DTC, test the system for normal operation. **No** GO to AU4.
AU4: CHECK FOR OPEN CIRCUIT ON K-LINE BETWEEN THE DIAGNOSTIC CONNECTOR AND THE FFH MODULE	
	1 Turn the ignition switch to the **OFF** position.
	2 Disconnect the battery negative terminal.
	3 Disconnect the FFH module connector, JB232.
	4 Measure the resistance between the diagnostic connector, pin 07 (W) and JB232, pin 03 (W).
	Is the resistance greater than 5 ohms? **Yes** REPAIR the high resistance circuit. For additional information, refer to the wiring diagrams. CLEAR the DTC, test the system for normal operation. **No** Please check part is not on any form of prior authorisation before replacement.

PINPOINT TEST AV : AMPLIFIER SUPPLY OR GROUND FAULT

TEST CONDITIONS	DETAILS/RESULTS/ACTIONS
AV1: CHECK THE B+ SUPPLY TO THE AMPLIFIER	
	1 Turn the ignition switch to the **OFF** position.
	2 Disconnect the amplifier connector, CA425.
	3 Measure the voltage between CA425, pin 03 (NR) and GROUND.
	4 Measure the voltage between CA425, pin 09 (NR) and GROUND.
	Is either voltage less than 10 volts? **Yes** REPAIR the circuit between CA425, pins 03/09 and battery. This circuit includes the primary junction box, fuse 20. For additional information, refer to the wiring diagrams. **No** GO to AV2.
AV2: CHECK THE GROUND TO THE AMPLIFIER	
	1 Turn the ignition switch to the **OFF** position.
	2 Measure the resistance between CA425, pin 02 (B) and GROUND.
	3 Measure the resistance between CA425, pin 08 (B) and GROUND.
	Is either resistance greater than 5 ohms? **Yes** REPAIR the high resistance circuit. For additional information, refer to the wiring diagrams. **No** No fault found with power or ground supplies. Check for DTCs indicating a module fault.

Published: 11-May-2011

Module Communications Network - Communications NetworkVIN Range: J28493->V99999

Diagnosis and Testing

Principles of Operation

The vehicle has four module communication networks. Only three of which are connected to the diagnostic connector. The **standard corporate protocol (SCP)** and **controller area network (CAN)**, which are an unshielded twisted pair cable: data bus **+** and data bus **-** and the **International Standard Organization (ISO)** 9141 communication network, which is a single wire network.

The **domestic data bus (D2B)**, which is a fibre optic ring network, can be diagnosed through the SCP network, and with the optical bus tester.

The SCP, CAN and ISO networks can be connected to the Jaguar approved diagnostic system by one diagnostic connector. This makes troubleshooting these systems easier by allowing one smart tester to be able to diagnose any module on the three networks from one connector. On-board diagnosis of the D2B network is through the in car entertainment (ICE) head.

The diagnostic connector is located under the instrument panel.

The ISO 9141 communications network does not permit inter-module communications. When the Jaguar approved diagnostic system communicates with modules on the ISO 9141 communication network, the diagnostic system must ask for all information, the modules will not initiate communications.

The SCP communication network remains operational even with severing of one of the bus wires. Communications will also continue if one of the bus wires is shorted to ground or battery positive voltage (B+), or if some (but not all) termination resistors are lost.

Unlike the SCP communication network, the ISO 9141 communication network will not function if the wire is shorted to ground or battery positive voltage (B+). Also, if one of the modules on the ISO 9141 network loses power or shorts internally, communication to that module will fail.

The anti-lock brake control module is connected to the CAN communication network. The module comes in two forms. The first type is the standard equipped anti-lock brake system (ABS) with traction control. It controls the brake pressure to the four wheels to keep the vehicle under control while braking. The second type of ABS is optional and is called dynamic stability control (DSC). This module adds yaw and steering wheel angle sensors to the package to help in sensing a loss of vehicle control. For additional information,
REFER to: Anti-Lock Control - Stability Assist (206-09 Anti-Lock Control - Stability Assist, Description and Operation).

The in car entertainment (ICE) head is connected to the SCP communication network and also to the D2B network. The D2B communicates with the compact disc player, cellular phone transceiver, navigation system, amplifier, and the voice control module. For additional information on the compact disc,
REFER to: Audio System (415-00 Information and Entertainment System - General Information, Diagnosis and Testing).
For additional information on the cellular phone,
REFER to: Cellular Phone (419-08 Cellular Phone, Diagnosis and Testing).
For additional information on the navigation system,
REFER to: Navigation System (419-07 Navigation System, Diagnosis and Testing).
For additional information on the amplifier,
REFER to: Audio System (415-01 Audio Unit, Description and Operation).
For additional information on the voice activated control system,
REFER to: Multifunction Electronic Module (419-10 Multifunction Electronic Modules, Diagnosis and Testing).

The electronic automatic temperature control (EATC) module is connected to the CAN communication network. The EATC module controls automatic climate functions that maintain the vehicle at a constant temperature setting. For additional information,
REFER to: Climate Control System (412-00 Climate Control System - General Information, Diagnosis and Testing).

The instrument cluster (also known as an instrument cluster module ICM) is connected to the CAN and SCP communication networks. The instrument cluster displays information received on the SCP including speedometer, odometer, fuel, and message center warnings. The instrument cluster displays information received on the CAN including ABS, air conditioning, transmission and engine condition. The instrument cluster also controls the passive anti-theft system (PATS). For additional information;
REFER to: Instrument Cluster and Panel Illumination (413-00 Instrument Cluster and Panel Illumination, Diagnosis and Testing).
For instrument cluster operation and
REFER to: Anti-Theft - Passive (419-01B Anti-Theft - Passive, Diagnosis and Testing).
for PATS.

The general electronic module (GEM) is connected to the SCP communication network. The GEM controls both interior and exterior lighting, active anti-theft functions and warning chimes. For additional information on interior lamps,
REFER to: Interior Lighting (417-02 Interior Lighting, Diagnosis and Testing).
For additional information on exterior lighting,
REFER to: Headlamps (417-01 Exterior Lighting, Diagnosis and Testing).
For additional information on active anti-theft,
REFER to: Anti-Theft - Active (419-01A Anti-Theft - Active, Diagnosis and Testing).
For additional information on warning chimes,
REFER to: Warning Devices (413-09 Warning Devices, Diagnosis and Testing).

The engine control module (ECM) is connected to both the CAN and ISO 9141 communication networks. The ECM controls the engine performance, electronic ignition, emission controls, speed control, and on board diagnostics. For additional information;
REFER to: Electronic Engine Controls - 2.5L NA V6 - AJV6/3.0L NA V6 - AJ27, VIN Range: E96603->J28492 (303-14A Electronic Engine Controls - 2.0L NA V6 - AJV6/2.5L NA V6 - AJV6/3.0L NA V6 - AJ27, Diagnosis and Testing).
,
REFER to: Electronic Engine Controls - 2.0L NA V6 - AJV6 (303-14A Electronic Engine Controls - 2.0L NA V6 - AJV6/2.5L NA V6 - AJV6/3.0L NA V6 - AJ27, Diagnosis and Testing).
or
REFER to: Electronic Engine Controls (303-14B Electronic Engine Controls - 2.0L Duratorq-TDCi/2.2L Duratorq-TDCi (110kW/150PS) - Puma, Diagnosis and Testing).

The 'phone module is connected to the D2B communication network, and incorporates the VEMS, or Vehicle Emergency Messaging System. The module allows a user to request emergency assistance (police, ambulance, fire, recovery) or directions to a desired location at the touch of a button. Also, if any of the vehicle's airbags are deployed while the VEMS system is powered ON, the system automatically issues a call for emergency assistance. For additional information,
REFER to: Compact Disc (CD) Changer - 4-Door (415-01 Audio Unit, Removal and Installation).

The airbag restraints module is connected to the ISO 9141 communication network. The airbag control module controls the deployment of the air bags based on sensor input. For additional information;

REFER to: Air Bag Supplemental Restraint System (SRS) (501-20B Supplemental Restraint System, Diagnosis and Testing).

The voice activated control module (VACM) is connected to the D2B communication network. This allows the user to select functions by giving a voice command. The VACM sends the command information by D2B to the correct module or audio unit.

The navigation system (NAV) is connected to the D2B communication network, and performs it's diagnostics via the SCP network. The NAV receives inputs from the GPS antenna and various other sensors. For additional information,
REFER to: Navigation System (419-07 Navigation System, Diagnosis and Testing).

Inspection and Verification

1. **1.** Verify the customer concern.
2. **2.** Visually inspect for obvious signs of mechanical, electrical or optical damage.

Electrical
• Fuses • Wiring harness • Loose or corroded connections • Correct engagement of electrical connectors • **Controller area network (CAN)** • Instrument cluster (IC) • Steering wheel rotation sensor (SWRS) • Gear selector module (GSI) • Headlight levelling module (HID) • Yaw rate sensor • Electronic air temperature control module (EATCM) • Memory seat control module • Transmission control module (TCM) • Anti-lock brake control module with or without dynamic stability control (ABS/DSC) • Engine control module (ECM) • **Standard corporate protocol (SCP)** • Generic electronic module (GEM) • Instrument cluster (IC) • In-car entertainment (ICE) • Navigation system (NAV) • Engine control module (ECM) • **International standards organization (ISO)** • Fuel fired heater module • Reverse park aid module • Restraints control module (RCM) • Headlight levelling module (HID) • Roof console scanner • **Domestic data bus (D2B)** • ICE head unit (HU) • Compact disc changer (CD) • Cellular phone module (CPM) • Voice module (VACM) • Navigation system module (NSM) • Amplifier (AMP)

Visual Inspection Chart

Optical
• Routing of fibre optic harnesses • Correct engagement of optical connectors • Correct placement of optical connectors (ring order) • Damage to fibre (chafing, abrasion, kinking, cuts, etc) • Correct assembly of optical connectors (backout, etc)

Default Modes

Possible TCM default

- Fixed 4th gear
- Erratic gear shifts

Possible ECM default

- Throttle motor and relay disabled
- Throttle valve opening set to default value
- Idle speed controlled by fuel injection intervention
- Idle speed adaptation inhibited
- Throttle opening limited to 30%
- Vehicle speed limited
- Speed (cruise) control limited
- Maximum throttle opening for N range inhibited
- Maximum engine speed reduced
- HO2 sensor control circuit inhibited
- Maximum ignition retard

Symptom Chart

• NOTE: Network DTCs may be set by an error or communications failure in the network. Individual DTCs are in the table, alongside their respective modules, but may also be set by a combination of factors affecting the network, which would result in multiple DTCs being set for one error, or, as in the case of an open circuit, no DTC being set.

DTC	Description	Possible Source	Action
P0860	CAN ECM / JGM network malfunction	• Module power supply or ground interruption • CAN open circuit fault; JGM to ECM	Refer to power and ground test for suspect module. For JGM CAN circuit tests, GO to Pinpoint Test AW. Please check part is not on any form of prior authorization before replacement.

DTC	Description	Possible Source	Action
		• CAN short circuit fault • JGM failure • ECM failure	
P1573	CAN throttle angle error	• TP sensor fault (additional DTCs logged) • ECM CAN message error	For TP sensor circuit tests, REFER to: Electronic Engine Controls - 2.5L NA V6 - AJV6/3.0L NA V6 - AJ27, VIN Range: E96603->J28492 (303-14A Electronic Engine Controls - 2.0L NA V6 - AJV6/2.5L NA V6 - AJV6/3.0L NA V6 - AJ27, Diagnosis and Testing) / Electronic Engine Controls - 2.5L NA V6 - AJV6/3.0L NA V6 - AJ27, VIN Range: E96603->J28492 (303-14A Electronic Engine Controls - 2.0L NA V6 - AJV6/2.5L NA V6 - AJV6/3.0L NA V6 - AJ27, Diagnosis and Testing). Error message sent on CAN, but not CAN related. Check for additional DTCs indicating cause.
P1601	Incorrect ECM or TCM fitted to vehicle	• ECM configuration • TCM configuration	Configure the modules using the Jaguar approved diagnostic system.
P1603	TCM EEPROM failure	• Battery disconnected while the ignition switched ON • B+ power supply circuit; open circuit • TCM failure	For TCM EEPROM tests, GO to Pinpoint Test B.
P1609	ECM microprocessor to microprocessor communication failure	• ECM failure	Please check part is not on any form of prior authorization before replacement.
P1611	ECM sub CPU failure	• ECM failure	Please check part is not on any form of prior authorization before replacement.
P1633	ECM main CPU failure	• ECM failure	Please check part is not on any form of prior authorization before replacement.
P1634	Throttle 'watch-dog' circuit malfunction	• ECM failure	Please check part is not on any form of prior authorization before replacement.
P1637	CAN ECM to ABS/TCCM or DSC control module network malfunction	• Module power supply or ground interruption • CAN open circuit fault; ABS/TCCM or DSC to ECM • CAN short circuit fault • ABS/TCCM or DSC module failure • ECM failure	Refer to power and ground test for suspect module. For ABS/TCCM or DSC CAN circuit tests, GO to Pinpoint Test C. Please check part is not on any form of prior authorization before replacement.
P1638	CAN ECM / IC network malfunction	• Module power supply or ground interruption • CAN open circuit fault; IC to ECM • CAN short circuit fault • IC failure • ECM failure	Refer to power and ground test for suspect module. For IC CAN circuit tests, GO to Pinpoint Test D. Please check part is not on any form of prior authorization before replacement.
P1642	CAN circuit malfunction	• Module power supply or ground interruption • CAN short circuit fault • Control module failure; Check for additional logged DTCs to locate module source	Refer to power and ground test for suspect module. For network short circuit tests, GO to Pinpoint Test E.
P1643	CAN ECM / TCM network malfunction	• Module power supply or ground interruption • CAN open circuit fault; TCM to ECM • CAN short circuit fault • TCM failure • ECM failure	Refer to power and ground test for suspect module. For CAN open circuit tests, GO to Pinpoint Test A. For network short circuit tests, GO to Pinpoint Test E. Please check part is not on any form of prior authorization before replacement.
P1646	ECM HO2 sensor control malfunction, right-hand bank	• HO2 sensor heater failure • HO2 sensor sensing circuit; short circuit to ground, short circuit to high voltage, open circuit • ECM failure	For HO2 sensor circuit tests, REFER to: Electronic Engine Controls - 2.5L NA V6 - AJV6/3.0L NA V6 - AJ27, VIN Range: E96603->J28492 (303-14A Electronic Engine Controls - 2.0L NA V6 - AJV6/2.5L NA V6 - AJV6/3.0L NA V6 - AJ27, Diagnosis and Testing) / Electronic Engine Controls - 2.5L NA V6 - AJV6/3.0L NA V6 - AJ27, VIN Range: E96603->J28492 (303-14A Electronic Engine Controls - 2.0L NA V6 - AJV6/2.5L NA V6 - AJV6/3.0L NA V6 - AJ27, Diagnosis and Testing). Please check part is not on any form of prior authorization before replacement.
P1647	ECM HO2 sensor control malfunction, left-hand bank	• HO2 sensor heater failure • HO2 sensor sensing circuit; short circuit to ground, short circuit to high voltage, open circuit • ECM failure	For HO2 sensor circuit tests, REFER to: Electronic Engine Controls - 2.5L NA V6 - AJV6/3.0L NA V6 - AJ27, VIN Range: E96603->J28492 (303-14A Electronic Engine Controls - 2.0L NA V6 - AJV6/2.5L NA V6 - AJV6/3.0L NA V6 - AJ27, Diagnosis and Testing) / Electronic Engine Controls - 2.5L NA V6 - AJV6/3.0L NA V6 - AJ27, VIN Range: E96603->J28492 (303-14A Electronic Engine Controls - 2.0L NA V6 - AJV6/2.5L NA V6 - AJV6/3.0L NA V6 - AJ27, Diagnosis and Testing). Please check part is not on any form of prior authorization before replacement.
P1648	ECM KS self-test failure	• ECM failure	Please check part is not on any form of prior authorization before replacement.

DTC	Description	Possible Source	Action
P1656	TP sensor amplifier circuit malfunction	• ECM failure	Please check part is not on any form of prior authorization before replacement.
P1699	CAN ECM to EATCM network malfunction	• Module power supply or ground interruption • CAN open circuit fault; EATCM to ECM • CAN short circuit fault; EATCM to ECM • EATCM failure • ECM failure	Refer to power and ground test for suspect module. For EATCM open circuit tests, GO to Pinpoint Test A. For network short circuit tests, GO to Pinpoint Test F. Please check part is not on any form of prior authorization before replacement.
P1777	CAN torque reduction error	• ECM CAN message error	Error message sent on CAN, but not CAN related. Check for additional DTCs indicating cause.
P1796	CAN network malfunction	• Module power supply or ground interruption • CAN short circuit fault • TCM failure	Refer to power and ground test for suspect module. For network short circuit test, GO to Pinpoint Test A.
P1797	CAN TCM/ECM network malfunction	• Module power supply or ground interruption • CAN open circuit fault; TCM to ECM • CAN short circuit fault • TCM failure • ECM failure	Refer to power and ground test for suspect module. For TCM open/short circuit tests, GO to Pinpoint Test C.
P1799	CAN TCM to ABS/TCCM or DSC module network malfunction	• Module power supply or ground interruption • CAN short circuit fault • ABS/TCCM or DSC module failure • TCM failure	Refer to power and ground test for suspect module. For ABS/TCCM short circuit tests, GO to Pinpoint Test G.
U1041	GEM SCP network invalid vehicle speed data	• ABS/DSC wheel speed message error • SCP network error	For GEM SCP network tests, GO to Pinpoint Test H.
U1135	GEM SCP network invalid ignition switch data	• Instrument cluster ignition switch message error • SCP network error	For GEM SCP network tests, GO to Pinpoint Test H.
U1147	GEM anti-theft SCP network invalid ignition key-in data	• GEM key-in message error • SCP network error	For GEM SCP network tests, GO to Pinpoint Test H.
U1262	GEM SCP network ignition switch state message missing	• SCP circuit(s); open circuit • SCP network error	For GEM SCP network tests, GO to Pinpoint Test H.
U1262	ICE SCP network circuit fault	• SCP network circuit; open circuit, short circuit to B+, short circuit to ground • SCP network circuit fault • Audio unit fault	For ICE SCP network tests, GO to Pinpoint Test I.
U1900	CAN instrumentation messages missing	• Engine management, ABS, or DSC fault • CAN network fault	For ABS/DSC CAN network tests, GO to Pinpoint Test G.
U1900	Automatic climate control CAN fault	• CAN circuit; open circuit, short circuit to B+, short circuit to ground • Automatic climate control module internal CAN fault • CAN network fault	For EATC CAN network tests, GO to Pinpoint Test F.
U1900	ABS CAN fault	• CAN circuit: open circuit, short circuit to B+, short circuit to ground • ABS control module internal CAN fault • CAN network fault	For ABS/DSC CAN network tests, GO to Pinpoint Test G.
U1900	DSC CAN fault	• CAN circuit; open circuit, short circuit to B+, short circuit to ground • DSC control module internal CAN fault • CAN network fault	For ABS/DSC CAN network tests, GO to Pinpoint Test G.
U2003	CD autochanger not responding on D2B network	• D2B network 'wake-up' circuit; short circuit to B+, short circuit to ground • D2B network fault	For D2B 'wake-up' circuit tests, GO to Pinpoint Test K. For CD autochanger D2B network tests, GO to Pinpoint Test J. For D2B permanent supply tests, GO to Pinpoint Test R.
U2008	Cellular telephone not responding on D2B network	• D2B network 'wake-up' circuit; short circuit to B+, short circuit to ground • D2B network fault	For D2B 'wake-up' circuit tests, GO to Pinpoint Test K. For cellular telephone D2B network tests, GO to Pinpoint Test L. For D2B permanent supply tests, GO to Pinpoint Test R. For D2B accessory switched supply tests, GO to Pinpoint Test S. For D2B ignition switched supply tests, GO to Pinpoint Test T.

DTC	Description	Possible Source	Action
U2019	VACM not responding on D2B network	• D2B network 'wake-up' circuit; short circuit to B+, short circuit to ground • D2B network fault	For D2B 'wake-up' circuit tests, GO to Pinpoint Test K. For VACM D2B network tests, GO to Pinpoint Test M. For D2B accessory switched supply tests, GO to Pinpoint Test S. For D2B ignition switched supply tests, GO to Pinpoint Test T.
U2196	Instrument cluster CAN engine speed message invalid	• Verify integrity of engine management system • CAN network fault	For instrument cluster CAN network tests, GO to Pinpoint Test D.
U2197	Instrument cluster CAN engine speed message invalid	• Verify integrity of engine management system • CAN network fault	For instrument cluster CAN network tests, GO to Pinpoint Test D.
U2199	Instrument cluster CAN engine coolant temperature message invalid	• Verify integrity of engine management system • CAN network fault	For instrument cluster CAN network tests, GO to Pinpoint Test D.
U2200	Instrument cluster CAN odometer count message invalid	• Verify integrity of ABS or DSC systems • CAN network fault	For instrument cluster CAN network tests, GO to Pinpoint Test D.
U2202	Invalid DSC control module CAN configuration data received from ECM	• Reconfigure the ECM using the Jaguar approved diagnostic system • CAN network fault	For ECM CAN network tests, GO to Pinpoint Test E.
U2202	Invalid ABS control module CAN configuration data received from ECM	• Reconfigure the ECM using the Jaguar approved diagnostic system • CAN network fault	For ECM CAN network tests, GO to Pinpoint Test E.
U2509	ECM unable to fulfill ABS CAN torque reduction request	• Verify integrity of engine management system • CAN network fault	For ABS/DSC CAN network tests, GO to Pinpoint Test G.
U2509	ECM unable to fulfill DSC CAN torque reduction request	• Verify integrity of engine management system • CAN network fault	For ABS/DSC CAN network tests, GO to Pinpoint Test G.
U2510 (security flash code 23)	Anti-theft ECM identification mismatch	• ECM configuration fault • Incorrect ECM installed	Reconfigure ECM using the Jaguar approved diagnostic system. Please check part is not on any form of prior authorization before replacement.
U2511	Anti-theft ECM invalid data	• ECM configuration fault • Incorrect ECM installed • SCP network error	Reconfigure ECM using the Jaguar approved diagnostic system. Please check part is not on any form of prior authorization before replacement.
U2514	GEM wash/wipe SCP network vehicle speed message missing	• SCP circuit(s); open circuit • SCP network error	For GEM SCP network tests, GO to Pinpoint Test H.
U2520	Memory seats	• CAN open circuit fault: memory seat module to diagnostic connector • CAN short circuit fault • Memory seat module failure	For CAN open/short circuit tests, GO to Pinpoint Test A.
U2600	Audio D2B network 'wake-up' circuit fault	• D2B network 'wake-up' circuit; short circuit to B+	For D2B 'wake-up' circuit tests, GO to Pinpoint Test K.
U2601	Audio D2B network 'wake-up' circuit fault	• D2B network 'wake-up' circuit; short circuit to B+	For D2B 'wake-up' circuit tests, GO to Pinpoint Test K.
U2601	Voice activation module D2B network 'wake-up' circuit fault	• D2B network 'wake-up' circuit; short circuit to ground	For D2B 'wake-up' circuit tests, GO to Pinpoint Test K.
U2602	Break in optical ring **FROM** ICE head unit (transmitter)	• D2B network module disconnected • D2B network optical ring broken	For optical ring tests, GO to Pinpoint Test P.
U2603	Break in optical ring **TO** ICE head unit (receiver)	• D2B network module disconnected • D2B network optical ring broken	For optical ring tests, GO to Pinpoint Test Q.
U2609	Voice activation module D2B network 'wake-up' signal out of specification	• D2B network 'wake-up' circuit; high resistance • Voice activation module failure	For D2B 'wake-up' circuit tests, GO to Pinpoint Test K.
U2610	Voice activation module D2B network 'position status report' not received	• D2B network fault	For D2B 'wake-up' circuit tests, GO to Pinpoint Test K.
U2611	Voice activation module D2B network 'alarm clear command' not received	• D2B network fault	For D2B 'wake-up' circuit tests, GO to Pinpoint Test K.

DTC	Description	Possible Source	Action
U2613	Navigation control module not responding on D2B network	• D2B network 'wake-up' circuit; short circuit to B+, short circuit to ground • D2B network fault • Module permanent supply fault • Module accessory switched supply fault • Module ignition switched supply fault	For D2B 'wake-up' circuit tests, GO to Pinpoint Test K. For navigation module optical tests, GO to Pinpoint Test N. For D2B permanent supply tests, GO to Pinpoint Test R. For D2B accessory switched supply tests, GO to Pinpoint Test S.
U2614	Amplifier not responding on D2B network	• D2B network 'wake-up' circuit; short circuit to B+, short circuit to ground • D2B network fault	For D2B 'wake-up' circuit tests, GO to Pinpoint Test K. For amplifier optical tests, GO to Pinpoint Test O. For D2B permanent supply tests, GO to Pinpoint Test R. For D2B accessory switched supply tests, GO to Pinpoint Test S.
None	ISO circuit malfunction, RCM	• RCM K-line circuit; open circuit • RCM K-line circuit; short circuit	For RCM ISO tests, GO to Pinpoint Test AP.
None	ISO circuit malfunction, HID module	• HID module K-line circuit; open circuit • HID module K-line circuit; short circuit	For HID module ISO tests, GO to Pinpoint Test AQ.
None	ISO circuit malfunction, roof console module	• Roof console module K-line circuit; open circuit • Roof console module K-line circuit; short circuit	For roof console module ISO tests, GO to Pinpoint Test AR.
None	ISO circuit malfunction, reverse park aid module	• Reverse park aid module K-line circuit; open circuit • Reverse park aid module K-line circuit; short circuit	For reverse park aid module ISO tests, GO to Pinpoint Test AS.
None	ISO circuit malfunction, ECM	• ECM K-line circuit; open circuit • ECM K-line circuit; short circuit	For ECM ISO tests, GO to Pinpoint Test AT.
None	ISO circuit malfunction, fuel fired heater (FFH) module	• FFH module K-line circuit; open circuit • FFH module K-line circuit; short circuit	For FFH module ISO tests, GO to Pinpoint Test AU.

Power and Ground circuit test index

Modules may log DTCs if the power supply or GROUND is interrupted. Supply and GROUND tests are covered below by module name.

Description	Possible source	Action
IC supply or ground fault	• **B+** supply failure • **Ign+** supply failure • **Acc+** supply failure • **GROUND** failure	For IC circuit tests, GO to Pinpoint Test U.
SWRS supply or ground fault	• **Module** supply failure • **GROUND** failure	For SWRS circuit tests, GO to Pinpoint Test V.
Yaw rate sensor supply or ground fault	• **Module** supply failure • **GROUND** failure	For yaw rate sensor circuit tests, GO to Pinpoint Test W.
ABS/TCCM supply or ground fault	• **Ign+** supply failure • **Pump+** supply failure • **Solenoid+** supply failure • **GROUND** failure • Motor **GROUND** failure	For ABS/TCCM circuit tests, GO to Pinpoint Test X.
DSC module supply or ground fault	• **Ign+** supply failure • **Pump+** supply failure • **Solenoid+** supply failure • **GROUND** failure • Motor **GROUND** failure	For DSC module circuit tests, GO to Pinpoint Test Y.
GSI module supply or ground fault	• **Ign+** supply failure • **GROUND** failure	For GSI module circuit tests, GO to Pinpoint Test Z.
HID module supply or ground fault	• **Ign+** supply failure • **GROUND** failure	For HID module circuit tests, GO to Pinpoint Test AA.
EATC module supply or ground fault	• **B+** supply failure • **B+save** supply failure • **Ign+** supply failure • **GROUND** failure	For EATC module circuit tests, GO to Pinpoint Test AB.

Description	Possible source	Action
Memory seat module supply or ground fault	• **B+1** supply failure • **B+2** supply failure • **Ign+** supply failure • Electronic **GROUND** failure • Power **GROUND** failure • Signal **GROUND** failure	For memory seat module circuit tests, GO to Pinpoint Test AC.
TCM supply or ground fault (16 bit)	• **B+** supply failure • **Ign+** supply failure • **GROUND** failure	For 16 bit TCM circuit tests, GO to Pinpoint Test AD.
TCM supply or ground fault (32 bit)	• **B+** supply failure • **Ign+** supply failure • **GROUND** failure	For 32 bit TCM circuit tests, GO to Pinpoint Test AE.
ECM supply or ground fault, vehicles with 2.0L petrol engine	• **B+memory** supply failure • **Control** supply failure • **GROUND** failure	For ECM circuit tests, vehicles with 2.0L petrol engines, GO to Pinpoint Test AF.
ECM supply or ground fault, vehicles with 2.5/3.0L petrol engine	• **B+memory** supply failure • **Control** supply failure • **GROUND** failure	For ECM circuit tests, vehicles with 2.5/3.0L petrol engines, GO to Pinpoint Test AG.
ECM supply or ground fault, vehicles with 2.0L diesel engine	• **Vpwr** supply failure • **Control** supply failure • **GROUND** failure	For ECM circuit tests, vehicles with 2.0L diesel engines, GO to Pinpoint Test AH.
ICE supply or ground fault	• **B+memory** supply failure • **Acc+** supply failure • **GROUND** failure	For ICE circuit tests, GO to Pinpoint Test AI.
CD supply or ground fault	• **B+** supply failure • **GROUND** failure	For CD changer circuit tests, GO to Pinpoint Test AJ.
NAV module supply or ground fault	• **B+** supply failure • **Acc+** supply failure • **GROUND** failure	For NAV module circuit tests, GO to Pinpoint Test AK.
FFH module supply or ground fault	• **B+** supply failure • **Ign+** supply failure • **GROUND** failure	For FFH module circuit tests, GO to Pinpoint Test AL.
Park aid module supply or ground fault	• **Ign+** supply failure • **GROUND** failure	For park aid module circuit tests, GO to Pinpoint Test AM.
RCM supply or ground fault	• **Ign+** supply failure • **GROUND** failure	For RCM circuit tests, GO to Pinpoint Test AN.
GEM supply or ground fault	• **B+** supply failure	For GEM circuit tests, GO to Pinpoint Test AO.
Amplifier supply or ground fault	• **B+** supply failure • **GROUND** failure	For amplifier circuit tests, GO to Pinpoint Test AV.
JGM supply or ground fault	• **Ign+** supply failure • **GROUND** failure	For JGM circuit tests, GO to Pinpoint Test AX.

Pinpoint tests

• CAUTIONS:

Diagnosis by substitution from a donor vehicle is **NOT** acceptable. Each vehicle is configured to it's own vehicle identification data (VID) block, and substitution of control modules may not only not confirm a fault, but may cause faults in the vehicle being tested and/or the donor vehicle. Failure to follow this instruction may result in damage to the vehicle.

Electronic modules are sensitive to static electrical charges. If exposed to these charges, damage may result. Failure to follow this instruction may result in damage to the vehicle.

When probing connectors to take measurements in the course of the pinpoint tests, use the adaptor kit, part number 3548-1358-00. Failure to follow this instruction may result in damage to the vehicle.

• NOTE: When performing voltage or resistance tests, always use a digital multimeter (DMM) accurate to 3 decimal places, and with an up-to-date calibration certificate. When testing resistance, always take the resistance of the DMM leads into account.

• NOTE: Before beginning any diagnosis of the D2B system, codes B1342, U2602, or U2603 must be rectified. No D2B function is possible with these failures present.

• NOTE: Check and rectify basic faults before beginning diagnostic routines involving pinpoint tests.

• NOTE: If DTCs are recorded and the symptom is not present when performing the pinpoint tests, an intermittent concern may be the cause. Always check for loose connections and corroded terminals.

PINPOINT TEST A : CHECK THE CONTROLLER AREA NETWORK (CAN) CONTINUITY

• NOTE: The following test is based on the maximum number of modules in the network. Refer to the wiring diagrams for information on networks with fewer modules.

TEST CONDITIONS	DETAILS/RESULTS/ACTIONS
A1: CHECK THE RESISTANCE OF THE CAN NETWORK	
	1 Turn the ignition switch to the **OFF** position.
	2 Measure the resistance between pins 06 (Y) and 14 (G) of the diagnostic connector.
	Is the resistance between 50 and 70 ohms? **Yes** GO to A3. **No** GO to A2.
A2: CHECK THE CAN NETWORK FOR SHORT CIRCUIT	
	1 Turn the ignition switch to the **OFF** position.
	2 Measure the resistance between pins 06 (Y) and 14 (G) of the diagnostic connector.
	Is the resistance less than 50 ohms? **Yes** CHECK the network for short circuit. For additional information, refer to the wiring diagrams. Clear any DTCs, test the system for normal operation. **No** GO to A3.
A3: CHECK THE CAN + CIRCUIT BETWEEN THE DIAGNOSTIC CONNECTOR AND THE STEERING WHEEL ROTATION SENSOR	
	1 Disconnect the steering wheel rotation sensor connector, IP19.
	2 Measure the resistance between IP19, pin 03 (Y) and the diagnostic connector, pin 06 (Y).
	Is the resistance greater than 5 ohms? **Yes** REPAIR the high resistance circuit. For additional information, refer to the wiring diagrams. Clear any DTCs, test the system for normal operation. **No** GO to A4.
A4: CHECK THE CAN - CIRCUIT BETWEEN THE DIAGNOSTIC CONNECTOR AND THE STEERING WHEEL ROTATION SENSOR	
	1 Measure the resistance between IP19, pin 04 (G) and the diagnostic connector, pin 14 (G).
	Is the resistance greater than 5 ohms? **Yes** REPAIR the high resistance circuit. For additional information, refer to the wiring diagrams. Clear any DTCs, test the system for normal operation. **No** GO to A5.
A5: CHECK THE CAN + CIRCUIT BETWEEN THE DIAGNOSTIC CONNECTOR AND THE YAW RATE SENSOR	
	1 Disconnect the yaw rate sensor connector, IP20.
	2 Measure the resistance between IP20, pin 03 (Y) and the diagnostic connector, pin 06 (Y).
	Is the resistance greater than 5 ohms? **Yes** REPAIR the high resistance circuit. For additional information, refer to the wiring diagrams. Clear any DTCs, test the system for normal operation. **No** GO to A6.
A6: CHECK THE CAN - CIRCUIT BETWEEN THE DIAGNOSTIC CONNECTOR AND THE YAW RATE SENSOR	
	1 Measure the resistance between IP20, pin 02 (G) and the diagnostic connector, pin 14 (G).
	Is the resistance greater than 5 ohms? **Yes** REPAIR the high resistance circuit. For additional information, refer to the wiring diagrams. Clear any DTCs, test the system for normal operation. **No** GO to A7.
A7: CHECK THE CAN + CIRCUIT BETWEEN THE DIAGNOSTIC CONNECTOR AND THE MEMORY SEAT MODULE (WHERE FITTED)	
	1 Disconnect the memory seat module connector, DM01.
	2 Measure the resistance between DM01, pin 12 (Y) and the diagnostic connector, pin 06 (Y).
	Is the resistance greater than 5 ohms? **Yes** REPAIR the high resistance circuit. For additional information, refer to the wiring diagrams. Clear any DTCs, test the system for normal operation. **No** GO to A8.
A8: CHECK THE CAN - CIRCUIT BETWEEN THE DIAGNOSTIC CONNECTOR AND THE MEMORY SEAT MODULE (WHERE FITTED)	
	1 Measure the resistance between DM01, pin 02 (G) and the diagnostic connector, pin 14 (G).
	Is the resistance greater than 5 ohms? **Yes** REPAIR the high resistance circuit. For additional information, refer to the wiring diagrams. Clear any DTCs, test the system for normal operation. **No** GO to A9.
A9: CHECK THE CAN + CIRCUIT BETWEEN THE DIAGNOSTIC CONNECTOR AND THE ABS/DSC MODULE	
	1 Disconnect the ABS/TCCM connector, JB45, or DSC module connector, JB185.
	2 Measure the resistance between JB45/JB185, pin 24 (Y) and the diagnostic connector, pin 06 (Y).
	Is the resistance greater than 5 ohms? **Yes** REPAIR the high resistance circuit. For additional information, refer to the wiring diagrams. Clear any DTCs, test the system for normal operation. **No** GO to A10.
A10: CHECK THE CAN - CIRCUIT BETWEEN THE DIAGNOSTIC CONNECTOR AND THE ABS/DSC MODULE	
	1 Measure the resistance between JB45/JB185, pin 40 (G) and the diagnostic connector, pin 14 (G).

	Is the resistance greater than 5 ohms? **Yes** REPAIR the high resistance circuit. For additional information, refer to the wiring diagrams. Clear any DTCs, test the system for normal operation. **No** GO to A11.
A11: CHECK THE CAN + CIRCUIT BETWEEN THE DIAGNOSTIC CONNECTOR AND THE HID MODULE (WHERE FITTED)	
	1 Disconnect the HID module connector, IP130.
	2 Measure the resistance between IP130, pin 02 (Y) and the diagnostic connector, pin 06 (Y).
	Is the resistance greater than 5 ohms? **Yes** REPAIR the high resistance circuit. For additional information, refer to the wiring diagrams. Clear any DTCs, test the system for normal operation. **No** GO to A12.
A12: CHECK THE CAN - CIRCUIT BETWEEN THE DIAGNOSTIC CONNECTOR AND THE HID MODULE (WHERE FITTED)	
	1 Measure the resistance between IP130, pin 03 (G) and the diagnostic connector, pin 14 (G).
	Is the resistance greater than 5 ohms? **Yes** REPAIR the high resistance circuit. For additional information, refer to the wiring diagrams. Clear any DTCs, test the system for normal operation. **No** NO circuit fault found. Check DTCs for indications of a module fault.

PINPOINT TEST B : P1603. TCM EEPROM FAILURE	
TEST CONDITIONS	**DETAILS/RESULTS/ACTIONS**
B1: DTC SET BY 3 POSSIBLE FACTORS	
	1 Check battery voltage.
	Has the battery been discharged to a voltage where the engine would not crank? **Yes** CHARGE and test the battery. Install a new battery, if required. REFER to: Battery (414-01 Battery, Mounting and Cables, Removal and Installation). Carry out a drive-cycle. (The vehicle may lose it's adaptive values and will need to re-learn them. These values will depend on the owner's driving style, and can only be learnt by normal use.) **No** GO to B2.
B2: DTC SET BY 3 POSSIBLE FACTORS	
	1 Check the TCM for signs of water ingress.
	Does the TCM show any indication of water ingress? **Yes** INSTALL a new TCM. REFER to: Transmission Control Module (TCM) (307-01B Automatic Transmission/Transaxle - Vehicles With: 6-Speed Automatic Transaxle - AWF21, In-vehicle Repair). CLEAR the DTC, test the system for normal operation. **No** GO to B3.
B3: DTC SET BY 3 POSSIBLE FACTORS	
	1 Check if the battery has been disconnected with the ignition switched on.
	Has the battery been disconnected with the ignition switched on? **Yes** CARRY out a drive-cycle. For additional information, refer to the DTC section of GTR. (The vehicle may lose it's adaptive values and will need to re-learn them. These values will depend on the owner's driving style, and can only be learnt by normal use.) **No** INSTALL a new TCM. REFER to: Transmission Control Module (TCM) (307-01B Automatic Transmission/Transaxle - Vehicles With: 6-Speed Automatic Transaxle - AWF21, In-vehicle Repair). CLEAR the DTC, test the system for normal operation.

PINPOINT TEST C : P1637: CAN NETWORK MALFUNCTION, TRANSMISSION CONTROL MODULE (TCM)	
TEST CONDITIONS	**DETAILS/RESULTS/ACTIONS**
C1: CHECK TCM FOR DAMAGE	
	1 Inspect the TCM
	Does the TCM indicate any signs of damage? **Yes** INSTALL a new TCM. REFER to: Transmission Control Module (TCM) (307-01B Automatic Transmission/Transaxle - Vehicles With: 6-Speed Automatic Transaxle - AWF21, In-vehicle Repair). CLEAR the DTC, test the system for normal operation. **No** GO to C2.
C2: CHECK CAN + FOR SHORT CIRCUIT TO GROUND	
	1 Measure the resistance between the diagnostic connector, pin 06, (Y) and GROUND.
	Is the resistance less than 10,000 ohms? **Yes** REPAIR the short circuit. For additional information, refer to the wiring diagrams. CLEAR the DTC, test the system for normal operation. **No** GO to C3.
C3: CHECK CAN + FOR SHORT CIRCUIT TO BATTERY	
	1 Measure the resistance between the diagnostic connector, pins 06, (Y) and pin 16 (OY).

	Is the resistance less than 10,000 ohms? **Yes** REPAIR the short circuit. For additional information, refer to the wiring diagrams. CLEAR the DTC, test the system for normal operation. **No** GO to C4.
C4: CHECK CAN - FOR SHORT CIRCUIT TO GROUND	
	1 Measure the resistance between the diagnostic connector, pin 14 (G) and GROUND.
	Is the resistance less than 10,000 ohms? **Yes** REPAIR the short circuit. For additional information, refer to the wiring diagrams. CLEAR the DTC, test the system for normal operation. **No** GO to C5.
C5: CHECK CAN - FOR SHORT CIRCUIT TO BATTERY	
	1 Measure the resistance between the diagnostic connector, pin 14 (G) and pin 16 (OY).
	Is the resistance less than 10,000 ohms? **Yes** REPAIR the short circuit. For additional information, refer to the wiring diagrams. CLEAR the DTC, test the system for normal operation. **No** GO to C6.
C6: CHECK FOR SHORT CIRCUIT BETWEEN CAN + AND CAN -	
	1 Measure the resistance between the diagnostic connector, pins 6 (Y) and 14 (G).
	Is the resistance less than 10,000 ohms? **Yes** REPAIR the short circuit. For additional information, refer to the wiring diagrams. CLEAR the DTC, test the system for normal operation. **No** GO to C7.
C7: CHECK FOR OPEN CIRCUIT ON CAN + BETWEEN DIAGNOSTIC CONNECTOR AND THE TCM	
	1 Disconnect the battery negative terminal. Vehicles with 16 bit modules - • Disconnect the TCM connector, JB131. • Measure the resistance between the diagnostic connector, pin 06 (Y) and JB131, pin 33 (Y). Vehicles with 32 bit modules - • Disconnect the TCM connector, JB230. • Measure the resistance between the diagnostic connector, pin 06 (Y) and JB230, pin 05 (Y).
	Is the resistance greater than 5 ohms? **Yes** REPAIR the high resistance circuit. For additional information, refer to the wiring diagrams. CLEAR the DTC, test the system for normal operation. **No** GO to C8.
C8: CHECK FOR OPEN CIRCUIT ON CAN - BETWEEN THE DIAGNOSTIC CONNECTOR AND THE TCM	
	1 Measure the resistance between the diagnostic connector, pin 14 (G) and: Vehicles with 16 bit modules - • JB131, pin 12 (G). Vehicles with 32 bit modules - • JB230, pin 06 (G).
	Is the resistance less than 5 ohms? **Yes** GO to C9. **No** REPAIR the CAN - circuit. For additional information, refer to the wiring diagrams. CLEAR the DTC, test the system for normal operation.
C9: CHECK FOR CORRECT BUS TERMINATION	
	1 Reconnect the TCM connector, JB131 or JB230.
	2 Measure the resistance between the diagnostic connector, pins 06 (Y) and 14 (G).
	Is the resistance between 50 and 70 ohms? **Yes** INSTALL a new TCM. REFER to: Transmission Control Module (TCM) (307-01B Automatic Transmission/Transaxle - Vehicles With: 6-Speed Automatic Transaxle - AWF21, In-vehicle Repair). CLEAR the DTC, test the system for normal operation. **No** GO to C10.
C10: CHECK CONTINUITY OF THE CAN + CIRCUIT BETWEEN THE ECM AND THE IC	
	1 To test: Vehicles with 2.5 and 3.0L engine - • Disconnect the ECM connector, EN16, and the IC connector, IP10. • Measure the resistance between EN16, pin 124 (Y) and IP10, pin 17 (Y). Vehicles with 2.0L petrol engine - • Disconnect the ECM connector, EN65, and the IC connector, IP10. • Measure the resistance between EN65, pin 89 (Y) and IP10, pin 17 (Y). Vehicles with 2.0L and 2.2L diesel engine -

	• Disconnect the ECM connector, DL01, and the IC connector, IP10. • Measure the resistance between DL01, pin 54 (Y) and IP10, pin 17 (Y).
	Is the resistance greater than 5 ohms? **Yes** REPAIR the CAN + circuit. For additional information, refer to the wiring diagrams. CLEAR the DTC, test the system for normal operation. **No** GO to C11.
C11: CHECK CONTINUITY OF THE CAN - CIRCUIT BETWEEN THE ECM AND THE IC	
	1 Measure the resistance between: Vehicles with 2.5 and 3.0L engine - • EN16, pin 123 (G) and IP10, pin 18 (G). Vehicles with 2.0L petrol engine - • EN65, pin 88 (G) and IP10, pin 18 (G). Vehicles with 2.0L and 2.2L diesel engine - • DL01, pin 73 (G) and IP10, pin 18 (G).
	Is the resistance greater than 5 ohms? **Yes** REPAIR the CAN - circuit. For additional information, refer to the wiring diagrams. CLEAR the DTC, test the system for normal operation. **No** GO to C12.
C12: CHECK FOR LOSS OF TERMINATION WITHIN THE ECM	
	1 To test: Vehicles with 2.5 and 3.0L engine - • Measure the resistance between pins 123 and 124 of the ECM. Vehicles with 2.0L petrol engine - • Measure the resistance between pins 88 and 89 of the ECM. Vehicles with 2.0L and 2.2L diesel engine - • Measure the resistance between pins 54 and 73 of the ECM.
	Is the resistance between 110 and 140 ohms? **Yes** GO to C13. **No** Please check part is not on any form of prior authorization before replacement.
C13: CHECK FOR LOSS OF TERMINATION WITHIN THE IC	
	1 Measure the resistance between pins 17 and 18 of the IC.
	Is the resistance between 110 and 140 ohms? **Yes** POSSIBLE intermittent fault. Recheck DTCs. **No** INSTALL a new instrument cluster. REFER to: Instrument Cluster (413-01 Instrument Cluster, Removal and Installation). CLEAR the DTC, test the system for normal operation.

PINPOINT TEST D : P1638: CAN NETWORK MALFUNCTION, INSTRUMENT CLUSTER (IC)	
TEST CONDITIONS	**DETAILS/RESULTS/ACTIONS**
D1: CHECK THE IC FOR DAMAGE	
	1 Inspect the IC for damage.
	Does the IC indicate any signs of damage? **Yes** INSTALL a new instrument cluster. REFER to: Instrument Cluster (413-01 Instrument Cluster, Removal and Installation). CLEAR the DTC, test the system for normal operation. **No** GO to D2.
D2: CHECK CAN + FOR SHORT CIRCUIT TO GROUND	
	1 Turn the ignition switch to the **OFF** position.
	2 Measure the resistance between the diagnostic connector, pin 06 (Y) and GROUND.
	Is the resistance less than 10,000 ohms? **Yes** REPAIR the short circuit. For additional information, refer to the wiring diagrams. CLEAR the DTC, test the system for normal operation. **No** GO to D3.
D3: CHECK CAN + FOR SHORT CIRCUIT TO BATTERY	
	1 Measure the resistance between the diagnostic connector, pin 06 (Y) and pin 16 (OY).
	Is the resistance less than 10,000 ohms? **Yes** REPAIR the short circuit. For additional information, refer to the wiring diagrams. CLEAR the DTC, test the system for normal operation. **No** GO to D4.
D4: CHECK CAN - FOR SHORT CIRCUIT TO GROUND	
	1 Measure the resistance between the diagnostic connector, pin 14 (G) and GROUND.

	Is the resistance less than 10,000 ohms? **Yes** REPAIR the short circuit. For additional information, refer to the wiring diagrams. CLEAR the DTC, test the system for normal operation. **No** GO to D5.
D5: CHECK CAN - FOR SHORT CIRCUIT TO BATTERY	
	1 Measure the resistance between the diagnostic connector, pins 14 (G) and 16 (OY).
	Is the resistance less than 10,000 ohms? **Yes** REPAIR the short circuit. For additional information, refer to the wiring diagrams. CLEAR the DTC, test the system for normal operation. **No** GO to D6.
D6: CHECK FOR SHORT CIRCUIT BETWEEN CAN + AND CAN -	
	1 Disconnect the battery negative terminal.
	2 Measure the resistance between the diagnostic connector, pins 06 (Y) and 14 (G).
	Is the resistance less than 10,000 ohms? **Yes** REPAIR the short circuit. For additional information, refer to the wiring diagrams. CLEAR the DTC, test the system for normal operation. **No** GO to D7.
D7: CHECK FOR OPEN CIRCUIT ON CAN + BETWEEN THE DIAGNOSTIC CONNECTOR AND THE IC	
	1 Disconnect the IC connector, IP10.
	2 Measure the resistance between the diagnostic connector, pin 06 (Y) and IP10, pin 17 (Y).
	Is the resistance greater than 5 ohms? **Yes** REPAIR the high resistance circuit. For additional information, refer to the wiring diagrams. CLEAR the DTC, test the system for normal operation. **No** GO to D8.
D8: CHECK FOR OPEN CIRCUIT ON CAN - BETWEEN THE DIAGNOSTIC CONNECTOR AND THE IC	
	1 Measure the resistance between the diagnostic connector, pin 14 (G) and IP10, pin 18 (G).
	Is the resistance greater than 5 ohms? **Yes** REPAIR the high resistance circuit. For additional information, refer to the wiring diagrams. CLEAR the DTC, test the system for normal operation. **No** GO to D9.
D9: CHECK FOR CORRECT BUS TERMINATION	
	1 Reconnect the IC connector, IP10.
	2 Measure the resistance between the diagnostic connector, pins 06 (Y) and 14 (G).
	Is the resistance between 50 and 70 ohms? **Yes** INSTALL a new instrument cluster. REFER to: Instrument Cluster (413-01 Instrument Cluster, Removal and Installation). CLEAR the DTC, test the system for normal operation. **No** GO to D10.
D10: CHECK CONTINUITY OF THE CAN + CIRCUIT BETWEEN THE ECM AND THE IC	
	1 To test: Vehicles with 2.5 and 3.0L engine - ● Disconnect the ECM connector, EN16, and the IC connector, IP10. ● Measure the resistance between EN16, pin 124 (Y) and IP10, pin 17 (Y). Vehicles with 2.0L petrol engine - ● Disconnect the ECM connector, EN65, and the IC connector, IP10. ● Measure the resistance between EN65, pin 89 (Y) and IP10, pin 17 (Y). Vehicles with 2.0L and 2.2L diesel engine - ● Disconnect the ECM connector, DL01, and the IC connector, IP10. ● Measure the resistance between DL01, pin 54 (Y) and IP10, pin 17 (Y).
	Is the resistance greater than 5 ohms? **Yes** REPAIR the high resistance circuit. For additional information, refer to the wiring diagrams. CLEAR the DTC, test the system for normal operation. **No** GO to D11.
D11: CHECK CONTINUITY OF THE CAN - CIRCUIT BETWEEN THE ECM AND THE IC	
	1 Measure the resistance between: Vehicles with 2.5 and 3.0L engine - ● EN16, pin 123 (G) and IP10, pin 18 (G). Vehicles with 2.0L petrol engine - ● EN65, pin 88 (G) and IP10, pin 18 (G). Vehicles with 2.0L and 2.2L diesel engine - ● DL01, pin 73 (G) and IP10, pin 18 (G).

	Is the resistance greater than 5 ohms? **Yes** REPAIR the high resistance circuit. For additional information, refer to the wiring diagrams. CLEAR the DTC, test the system for normal operation. **No** GO to D12.
D12: CHECK FOR LOSS OF TERMINATION WITHIN THE ECM	
	1 Measure the resistance between: Vehicles with 2.5 and 3.0L engine - ● pins 123 and 124 of the ECM. Vehicles with 2.0L petrol engine - ● pins 88 and 89 of the ECM. Vehicles with 2.0L and 2.2L diesel engine - ● pins 54 and 73 of the ECM.
	Is the resistance between 110 and 140 ohms? **Yes** GO to D13. **No** Please check part is not on any form of prior authorization before replacement.
D13: CHECK FOR LOSS OF TERMINATION WITHIN THE IC	
	1 Measure the resistance between pins 17 and 18 of the IC.
	Is the resistance between 110 and 140 ohms? **Yes** Possible intermittent fault. Recheck DTCs. **No** INSTALL a new instrument cluster. REFER to: Instrument Cluster (413-01 Instrument Cluster, Removal and Installation). CLEAR the DTC, test the system for normal operation.

PINPOINT TEST E : P1642; P1643; P1797: CAN NETWORK MALFUNCTION, ECM	
TEST CONDITIONS	**DETAILS/RESULTS/ACTIONS**
E1: CHECK THE ECM FOR DAMAGE	
	1 Inspect the ECM.
	Does the ECM indicate any signs of damage? **Yes** Please check part is not on any form of prior authorization before replacement. **No** GO to E2.
E2: CHECK CAN + FOR SHORT CIRCUIT TO GROUND	
	1 Measure the resistance between the diagnostic connector, pin 06, (Y) and GROUND.
	Is the resistance less than 10,000 ohms? **Yes** REPAIR the short circuit. For additional information, refer to the wiring diagrams. CLEAR the DTC, test the system for normal operation. **No** GO to E3.
E3: CHECK CAN + FOR SHORT CIRCUIT TO BATTERY	
	1 Measure the resistance between the diagnostic connector, pin 06, (Y) and pin 16 (OY).
	Is the resistance less than 10,000 ohms? **Yes** REPAIR the short circuit. For additional information, refer to the wiring diagrams. CLEAR the DTC, test the system for normal operation. **No** GO to E4.
E4: CHECK CAN - FOR SHORT CIRCUIT TO GROUND	
	1 Measure the resistance between the diagnostic connector, pin 14 (G) and GROUND.
	Is the resistance less than 10,000 ohms? **Yes** REPAIR the short circuit. For additional information, refer to the wiring diagrams. CLEAR the DTC, test the system for normal operation. **No** GO to E5.
E5: CHECK CAN - FOR SHORT CIRCUIT TO BATTERY	
	1 Measure the resistance between the diagnostic connector, pins 14 (G) and 16 (OY).
	Is the resistance less than 10,000 ohms? **Yes** REPAIR the short circuit. For additional information, refer to the wiring diagrams. CLEAR the DTC, test the system for normal operation. **No** GO to E6.
E6: CHECK FOR SHORT CIRCUIT BETWEEN CAN + AND CAN -	
	1 Measure the resistance between the diagnostic connector, pins 06 (Y) and 14 (G).
	Is the resistance less than 10,000 ohms? **Yes** REPAIR the short circuit. For additional information, refer to the wiring diagrams. CLEAR the DTC, test the system for normal operation. **No** GO to E7.
E7: CHECK FOR OPEN CIRCUIT ON CAN + BETWEEN THE DIAGNOSTIC CONNECTOR AND THE ECM	

	1 Disconnect the battery negative terminal. Vehicles with 2.5 and 3.0L engine - ● Disconnect the ECM connector, EN16. ● Measure the resistance between IP22 pin 06 (Y) and EN16, pin 124 (Y). Vehicles with 2.0L petrol engine - ● Disconnect the ECM connector, EN65. ● Measure the resistance between IP22 pin 06 (Y) and EN65, pin 89 (Y). Vehicles with 2.0L and 2.2L diesel engine - ● Disconnect the ECM connector, DL01. ● Measure the resistance between the diagnostic connector, pin 06 (Y) and DL01, pin 54 (Y).
	Is the resistance greater than 5 ohms? **Yes** REPAIR the high resistance circuit. For additional information, refer to the wiring diagrams. CLEAR the DTC, test the system for normal operation. **No** GO to E8.
E8: CHECK FOR OPEN CIRCUIT ON CAN - BETWEEN THE DIAGNOSTIC CONNECTOR AND THE ECM	
	1 To test: Vehicles with 2.5 and 3.0L engine - ● Measure the resistance between the diagnostic connector, pin 14 (G) and EN16, pin 123 (G). Vehicles with 2.0L petrol engine - ● Measure the resistance between the diagnostic connector, pin 14 (G) and EN65, pin 88 (G). Vehicles with 2.0L and 2.2L diesel engine - ● Measure the resistance between the diagnostic connector, pin 14 (G) and DL01, pin 73 (G).
	Is the resistance greater than 5 ohms? **Yes** REPAIR the high resistance circuit. For additional information, refer to the wiring diagrams. CLEAR the DTC, test the system for normal operation. **No** GO to E9.
E9: CHECK FOR CORRECT BUS TERMINATION	
	1 Reconnect the ECM connector.
	2 Measure the resistance between the diagnostic connector, pins 06 (Y) and 14 (G).
	Is the resistance between 50 and 70 ohms? **Yes** Please check part is not on any form of prior authorization before replacement. **No** GO to E10.
E10: CHECK CONTINUITY OF THE CAN + CIRCUIT	
	1 To test: Vehicles with 2.5 and 3.0L engine - ● Disconnect the ECM connector, EN16, and the IC connector, IP10. ● Measure the resistance between EN16, pin 124 (Y) and IP10, pin 17 (Y). Vehicles with 2.0L petrol engine - ● Disconnect the ECM connector, EN65, and the IC connector, IP10. ● Measure the resistance between EN65, pin 89 (Y) and IP10, pin 17 (Y). Vehicles with 2.0L and 2.2L diesel engine - ● Disconnect the ECM connector, DL01, and the IC connector, IP10. ● Measure the resistance between DL01, pin 54 (Y) and IP10, pin 17 (Y).
	Is the resistance greater than 5 ohms? **Yes** REPAIR the high resistance circuit. For additional information, refer to the wiring diagrams. CLEAR the DTC, test the system for normal operation. **No** GO to E11.
E11: CHECK CONTINUITY OF THE CAN - CIRCUIT	
	1 Measure the resistance between: Vehicles with 2.5 and 3.0L engine - ● EN16, pin 123 (G) and IP10, pin 18 (G). Vehicles with 2.0L petrol engine - ● EN65, pin 88 (G) and IP10, pin 18 (G). Vehicles with 2.0L and 2.2L diesel engine - ● DL01, pin 73 (G) and IP10, pin 18 (G).

	Is the resistance greater than 5 ohms? **Yes** REPAIR the high resistance circuit. For additional information, refer to the wiring diagrams. CLEAR the DTC, test the system for normal operation. **No** GO to E12.
E12: CHECK FOR LOSS OF TERMINATION WITHIN THE ECM	
	1 Measure the resistance between: Vehicles with 2.5 and 3.0L engine - • pins 123 and 124 of the ECM. Vehicles with 2.0L petrol engine - • pins 88 and 89 of the ECM. Vehicles with 2.0L and 2.2L diesel engine - • pins 54 and 73 of the ECM.
	Is the resistance between 110 and 140 ohms? **Yes** GO to E13. **No** Please check part is not on any form of prior authorization before replacement.
E13: CHECK FOR LOSS OF TERMINATION WITHIN THE IC	
	1 Measure the resistance between pins 17 and 18 of the IC.
	Is the resistance between 110 and 140 ohms? **Yes** Possible intermittent fault. Recheck DTCs. **No** INSTALL a new instrument cluster. REFER to: Instrument Cluster (413-01 Instrument Cluster, Removal and Installation). CLEAR the DTC, test the system for normal operation.

PINPOINT TEST F : P1699: CAN NETWORK MALFUNCTION, ELECTRONIC AUTOMATIC TEMPERATURE CONTROL (EATC) MODULE	
TEST CONDITIONS	**DETAILS/RESULTS/ACTIONS**
F1: CHECK THE EATC MODULE FOR DAMAGE	
	1 Inspect the EATC module for damage.
	Does the EATC module indicate any signs of damage? **Yes** INSTALL a new EATC module. REFER to: Climate Control System (412-00 Climate Control System - General Information, Description and Operation). CLEAR the DTC, test the system for normal operation. **No** GO to F2.
F2: CHECK CAN + FOR SHORT CIRCUIT TO GROUND	
	1 Measure the resistance between the diagnostic connector, pin 06 (Y) and GROUND.
	Is the resistance less than 10,000 ohms? **Yes** REPAIR the short circuit. For additional information, refer to the wiring diagrams. CLEAR the DTC, test the system for normal operation. **No** GO to F3.
F3: CHECK CAN + FOR SHORT CIRCUIT TO BATTERY	
	1 Turn the ignition switch to the **OFF** position.
	2 Measure the resistance between the diagnostic connector, pin 06 (Y) and pin 16 (OY).
	Is the resistance less than 10,000 ohms? **Yes** REPAIR the short circuit. For additional information, refer to the wiring diagrams. CLEAR the DTC, test the system for normal operation. **No** GO to F4.
F4: CHECK CAN - FOR SHORT CIRCUIT TO GROUND	
	1 Measure the resistance between the diagnostic connector, pin 14 (G) and GROUND.
	Is the resistance less than 10,000 ohms? **Yes** REPAIR the short circuit. For additional information, refer to the wiring diagrams. CLEAR the DTC, test the system for normal operation. **No** GO to F5.
F5: CHECK CAN - FOR SHORT CIRCUIT TO BATTERY	
	1 Measure the resistance between the diagnostic connector, pin 14 (G) and pin 16 (OY).
	Is the resistance less than 10,000 ohms? **Yes** REPAIR the short circuit. For additional information, refer to the wiring diagrams. CLEAR the DTC, test the system for normal operation. **No** GO to F6.
F6: CHECK FOR SHORT CIRCUIT BETWEEN CAN + AND CAN -	
	1 Disconnect the battery negative terminal.
	2 Measure the resistance between the diagnostic connector, pins 06 (Y) and 14 (G).

	Is the resistance less than 10,000 ohms? **Yes** REPAIR the short circuit. For additional information, refer to the wiring diagrams. CLEAR the DTC, test the system for normal operation. **No** GO to F7.
F7: CHECK FOR OPEN CIRCUIT ON CAN + BETWEEN THE DIAGNOSTIC CONNECTOR AND THE EATC MODULE	
	1 Disconnect the EATC module connector, IP101.
	2 Measure the resistance between the diagnostic connector, pin 06 (Y) and IP101, pin 22 (Y).
	Is the resistance greater than 5 ohms? **Yes** REPAIR the high resistance circuit. For additional information, refer to the wiring diagrams. CLEAR the DTC, test the system for normal operation. **No** GO to F8.
F8: CHECK FOR OPEN CIRCUIT ON CAN - BETWEEN THE DIAGNOSTIC CONNECTOR AND THE EATC MODULE	
	1 Measure the resistance between the diagnostic connector, pin 14 (G) and IP101, pin 23 (G).
	Is the resistance greater than 5 ohms? **Yes** REPAIR the high resistance circuit. For additional information, refer to the wiring diagrams. CLEAR the DTC, test the system for normal operation. **No** GO to F9.
F9: CHECK FOR CORRECT BUS TERMINATION	
	1 Reconnect the EATC module connector, IP101.
	2 Measure the resistance between the diagnostic connector, pins 06 (Y) and 14 (G).
	Is the resistance between 50 and 70 ohms? **Yes** INSTALL a new EATC module. REFER to: Climate Control System (412-00 Climate Control System - General Information, Description and Operation). CLEAR the DTC, test the system for normal operation. **No** GO to F10.
F10: CHECK CONTINUITY OF THE CAN + CIRCUIT BETWEEN THE ECM AND THE IC	
	1 To test: Vehicles with 2.5 and 3.0L engine - ● Disconnect the ECM connector, EN16, and the IC connector, IP10. ● Measure the resistance between EN16, pin 124 (Y) and IP10, pin 17 (Y). Vehicles with 2.0L petrol engine - ● Disconnect the ECM connector, EN65, and the IC connector, IP10. ● Measure the resistance between EN65, pin 89 (Y) and IP10, pin 17 (Y). Vehicles with 2.0L and 2.2L diesel engine - ● Disconnect the ECM connector, DL01, and the IC connector, IP10. ● Measure the resistance between DL01, pin 54 (Y) and IP10, pin 17 (Y).
	Is the resistance greater than 5 ohms? **Yes** REPAIR the high resistance circuit. For additional information, refer to the wiring diagrams. CLEAR the DTC, test the system for normal operation. **No** GO to F11.
F11: CHECK CONTINUITY OF THE CAN - CIRCUIT BETWEEN THE ECM AND THE IC	
	1 Measure the resistance between: Vehicles with 2.5 and 3.0L engine - ● EN16, pin 123 (G) and IP10, pin 18 (G). Vehicles with 2.0L petrol engine - ● EN65, pin 88 (G) and IP10, pin 18 (G). Vehicles with 2.0L and 2.2L diesel engine - ● DL01, pin 73 (G) and IP10, pin 18 (G).
	Is the resistance greater than 5 ohms? **Yes** REPAIR the high resistance circuit. For additional information, refer to the wiring diagrams. CLEAR the DTC, test the system for normal operation. **No** GO to F12.
F12: CHECK FOR LOSS OF TERMINATION WITHIN THE ECM	
	1 Measure the resistance between: Vehicles with 2.5 and 3.0L engine - ● pins 123 and 124 of the ECM. Vehicles with 2.0L petrol engine - ● pins 88 and 89 of the ECM. Vehicles with 2.0L and 2.2L diesel engine -

	• pins 54 and 73 of the ECM.
	Is the resistance between 110 and 140 ohms? **Yes** GO to F13. **No** Please check part is not on any form of prior authorization before replacement.
F13: CHECK FOR LOSS OF TERMINATION WITHIN THE IC	
	1 Measure the resistance between pins 17 and 18 of the IC.
	Is the resistance between 110 and 140 ohms? **Yes** POSSIBLE intermittent fault. Recheck DTCs. **No** INSTALL a new instrument cluster. REFER to: Instrument Cluster (413-01 Instrument Cluster, Removal and Installation). CLEAR the DTC, test the system for normal operation.

PINPOINT TEST G : P1799: CAN NETWORK MALFUNCTION, ANTI-LOCK BRAKE (ABS) / DYNAMIC STABILITY CONTROL (DSC) CONTROL MODULE	
TEST CONDITIONS	**DETAILS / RESULTS / ACTIONS**
G1: CHECK THE ABS OR DSC MODULE FOR DAMAGE	
	1 Inspect the ABS/TCCM or DSC module.
	Does the ABS/TCCM or DSC module indicate any signs of damage? **Yes** INSTALL a new ABS/TCCM or DSC module. REFER to: Hydraulic Control Unit (HCU) - VIN Range: J12992->V99999 (206-09 Anti-Lock Control - Stability Assist, Removal and Installation). CLEAR the DTC, test the system for normal operation. **No** GO to G2.
G2: CHECK CAN + FOR SHORT CIRCUIT TO GROUND	
	1 Turn the ignition switch to the **OFF** position.
	2 Measure the resistance between the diagnostic connector, pin 06 (Y) and GROUND.
	Is the resistance less than 10,000 ohms? **Yes** REPAIR the short circuit. For additional information, refer to the wiring diagrams. CLEAR the DTC, test the system for normal operation. **No** GO to G3.
G3: CHECK CAN + FOR SHORT CIRCUIT TO BATTERY	
	1 Measure the resistance between the diagnostic connector, pin 06, (Y) and pin 16 (OY).
	Is the resistance less than 10,000 ohms? **Yes** REPAIR the short circuit. For additional information, refer to the wiring diagrams. CLEAR the DTC, test the system for normal operation. **No** GO to G4.
G4: CHECK CAN - FOR SHORT CIRCUIT TO GROUND	
	1 Measure the resistance between the diagnostic connector, pin 14 (G) and GROUND.
	Is the resistance less than 10,000 ohms? **Yes** REPAIR the short circuit. For additional information, refer to the wiring diagrams. CLEAR the DTC, test the system for normal operation. **No** GO to G5.
G5: CHECK CAN - FOR SHORT CIRCUIT TO BATTERY	
	1 Measure the resistance between the diagnostic connector, pins 14 (G) and pin 16 (OY).
	Is the resistance less than 10,000 ohms? **Yes** REPAIR the short circuit. For additional information, refer to the wiring diagrams. CLEAR the DTC, test the system for normal operation. **No** GO to G6.
G6: CHECK FOR SHORT CIRCUIT BETWEEN CAN + AND CAN -	
	1 Disconnect the battery negative terminal.
	2 Measure the resistance between the diagnostic connector, pins 06 (Y) and 14 (G).
	Is the resistance less than 10,000 ohms? **Yes** REPAIR the short circuit. For additional information, refer to the wiring diagrams. CLEAR the DTC, test the system for normal operation. **No** GO to G7.
G7: CHECK FOR OPEN CIRCUIT ON CAN + BETWEEN THE DIAGNOSTIC CONNECTOR AND THE ABS OR DSC MODULE	
	1 Disconnect the ABS/TCCM connector, JB45, or DSC module connector, JB185.
	2 Measure the resistance between the diagnostic connector, pin 06 (Y) and JB45/JB185, pin 24 (Y).
	Is the resistance greater than 5 ohms? **Yes** REPAIR the high resistance circuit. For additional information, refer to the wiring diagrams. CLEAR the DTC, test the system for normal operation. **No** GO to G9.
G8: CHECK FOR OPEN CIRCUIT ON CAN - BETWEEN THE DIAGNOSTIC CONNECTOR AND THE ABS OR DSC MODULE	
	1 Measure the resistance between the diagnostic connector, pin 14 (G) and JB45/JB185, pin 40 (G).

	Is the resistance greater than 5 ohms? **Yes** REPAIR the high resistance circuit. For additional information, refer to the wiring diagrams. CLEAR the DTC, test the system for normal operation. **No** GO to G9.
G9: CHECK FOR CORRECT BUS TERMINATION	
	1 Reconnect the ABS/TCCM module connector, JB45, or DSC module connector, JB185.
	2 Measure the resistance between the diagnostic connector, pins 06 (Y) and 14 (G).
	Is the resistance between 50 and 70 ohms? **Yes** INSTALL a new ABS/TCCM module, or DSC module. REFER to: Hydraulic Control Unit (HCU) - VIN Range: J12992->V99999 (206-09 Anti-Lock Control - Stability Assist, Removal and Installation). CLEAR the DTC, test the system for normal operation. **No** GO to G10.
G10: CHECK CONTINUITY OF THE CAN + CIRCUIT BETWEEN THE ECM AND THE IC	
	1 To test: Vehicles with 2.5 and 3.0L engine - ● Disconnect the ECM connector, EN16, and the IC connector, IP10. ● Measure the resistance between EN16, pin 124 (Y) and IP10, pin 17 (Y). Vehicles with 2.0L petrol engine - ● Disconnect the ECM connector, EN65, and the IC connector, IP10. ● Measure the resistance between EN65, pin 89 (Y) and IP10, pin 17 (Y). Vehicles with 2.0L and 2.2L diesel engine - ● Disconnect the ECM connector, DL01, and the IC connector, IP10. ● Measure the resistance between DL01, pin 54 (Y) and IP10, pin 17 (Y).
	Is the resistance greater than 5 ohms? **Yes** REPAIR the high resistance circuit. For additional information, refer to the wiring diagrams. CLEAR the DTC, test the system for normal operation. **No** GO to G11.
G11: CHECK CONTINUITY OF THE CAN - CIRCUIT	
	1 Measure the resistance between: Vehicles with 2.5 and 3.0L engine - ● EN16, pin 123 (G) and IP10, pin 18 (G). Vehicles with 2.0L petrol engine - ● EN65, pin 88 (G) and IP10, pin 18 (G). Vehicles with 2.0L and 2.2L diesel engine - ● DL01, pin 73 (G) and IP10, pin 18 (G).
	Is the resistance greater than 5 ohms? **Yes** REPAIR the high resistance circuit. For additional information, refer to the wiring diagrams. CLEAR the DTC, test the system for normal operation. **No** GO to G12.
G12: CHECK FOR LOSS OF TERMINATION WITHIN THE ECM	
	1 Measure the resistance between: Vehicles with 2.5 and 3.0L engine - ● pins 123 and 124 of the ECM. Vehicles with 2.0L petrol engine - ● pins 88 and 89 of the ECM. Vehicles with 2.0L and 2.2L diesel engine - ● pins 54 and 73 of the ECM.
	Is the resistance between 110 and 140 ohms? **Yes** GO to G13. **No** Please check part is not on any form of prior authorization before replacement.
G13: CHECK FOR LOSS OF TERMINATION WITHIN THE IC	
	1 Measure the resistance between pins 17 and 18 of the instrument cluster.
	Is the resistance between 110 and 140 ohms? **Yes** Possible intermittent fault. Recheck DTCs. Repeat tests from A1. **No** INSTALL a new instrument cluster. REFER to: Instrument Cluster (413-01 Instrument Cluster, Removal and Installation). CLEAR the DTC, test the system for normal operation.

PINPOINT TEST H : SCP NETWORK MALFUNCTION, GENERIC ELECTRONIC MODULE (GEM)

TEST CONDITIONS	DETAILS/RESULTS/ACTIONS
H1: CHECK GEM FOR DAMAGE	
	1 Inspect the GEM for damage.
	Does the GEM indicate any signs of damage? **Yes** INSTALL a new GEM. REFER to: Generic Electronic Module (GEM) (419-10 Multifunction Electronic Modules, Removal and Installation). CLEAR the DTC, test the system for normal operation. **No** GO to H2.
H2: CHECK THE SCP + FOR SHORT CIRCUIT TO GROUND	
	1 Measure the resistance between the diagnostic connector, pin 02 (Y) and GROUND.
	Is the resistance less than 10,000 ohms? **Yes** REPAIR the short circuit. For additional information, refer to the wiring diagrams. CLEAR the DTC, test the system for normal operation. **No** GO to H3.
H3: CHECK THE SCP + FOR SHORT CIRCUIT TO BATTERY	
	1 Measure the resistance between the diagnostic connector, pins 02 (Y) and 16 (OY).
	Is the resistance less than 10,000 ohms? **Yes** REPAIR the short circuit. For additional information, refer to the wiring diagrams. CLEAR the DTC, test the system for normal operation. **No** GO to H4.
H4: CHECK THE SCP - FOR SHORT CIRCUIT TO GROUND	
	1 Measure the resistance between the diagnostic connector, pin 10 (U) and GROUND.
	Is the resistance less than 10,000 ohms? **Yes** REPAIR the short circuit. For additional information, refer to the wiring diagrams. CLEAR the DTC, test the system for normal operation. **No** GO to H5.
H5: CHECK THE SCP - FOR SHORT CIRCUIT TO BATTERY	
	1 Measure the resistance between the diagnostic connector, pins 10 (U) and 16 (OY).
	Is the resistance less than 10,000 ohms? **Yes** REPAIR the short circuit. For additional information, refer to the wiring diagrams. CLEAR the DTC, test the system for normal operation. **No** GO to H6.
H6: CHECK FOR SHORT CIRCUIT BETWEEN SCP + AND SCP -	
	1 Measure the resistance between the diagnostic connector, pins 10 (U) and 02, (Y).
	Is the resistance less than 10,000 ohms? **Yes** REPAIR the short circuit. For additional information, refer to the wiring diagrams. CLEAR the DTC, test the system for normal operation. **No** GO to H7.
H7: CHECK FOR OPEN CIRCUIT ON SCP + BETWEEN THE DIAGNOSTIC CONNECTOR AND THE GEM	
	1 Turn the ignition switch to the **OFF** position.
	2 Disconnect the battery negative terminal.
	3 Disconnect the GEM connector, IP05.
	4 Measure the resistance between the diagnostic connector, pin 02 (Y) and IP05, pin 19 (Y).
	Is the resistance greater than 5 ohms? **Yes** REPAIR the high resistance circuit. For additional information, refer to the wiring diagrams. CLEAR the DTC, test the system for normal operation. **No** GO to H8.
H8: CHECK FOR OPEN CIRCUIT ON SCP - BETWEEN THE DIAGNOSTIC CONNECTOR AND THE GEM	
	1 Measure the resistance between the diagnostic connector, pin 10 (U) and IP05, pin 18 (U).
	Is the resistance greater than 5 ohms? **Yes** REPAIR the high resistance circuit. For additional information, refer to the wiring diagrams. CLEAR the DTC, test the system for normal operation. **No** GO to H9.
H9: CHECK FOR CORRECT BUS TERMINATION ON SCP +	
	1 Reconnect the battery negative terminal.
	2 Reconnect the GEM connector, IP05.
	3 Measure the resistance between the diagnostic connector, pin 02 (Y) and GROUND.
	Is the resistance 150 to 210 ohms? **Yes** INSTALL a new GEM. REFER to: Generic Electronic Module (GEM) (419-10 Multifunction Electronic Modules, Removal and Installation). CLEAR the DTC, test the system for normal operation. **No** GO to H10.
H10: CHECK THE CONTINUITY OF THE GENERIC ELECTRONIC MODULE (GEM) SCP + CIRCUIT	
	1 Disconnect the battery negative terminal.
	2 Disconnect the GEM connector, IP05.
	3 Measure the resistance between the diagnostic connector, pin 02 (Y) and IP05, pin 19 (Y).

	Is the resistance greater than 5 ohms? **Yes** REPAIR the high resistance circuit. For additional information, refer to the wiring diagrams. CLEAR the DTC, test the system for normal operation. **No** GO to H11.
H11: CHECK FOR LOSS OF SCP + TERMINATION WITHIN THE GEM	
	1 Disconnect the GEM connector, IP06.
	2 Measure the resistance between IP05, pin 19, and IP06, pin 01 of the GEM.
	Is the resistance 320 to 400 ohms? **Yes** GO to H12. **No** INSTALL a new GEM. REFER to: Generic Electronic Module (GEM) (419-10 Multifunction Electronic Modules, Removal and Installation). CLEAR the DTC, test the system for normal operation.
H12: CHECK CONTINUITY OF THE INSTRUMENT CLUSTER (IC) SCP + CIRCUIT	
	1 Disconnect the IC connector, IP10.
	2 Measure the resistance between the diagnostic connector, pin 02 (Y) and IP10, pin 22 (Y).
	Is the resistance greater than 5 ohms? **Yes** REPAIR the high resistance circuit. For additional information, refer to the wiring diagrams. CLEAR the DTC, test the system for normal operation. **No** GO to H13.
H13: CHECK FOR LOSS OF SCP + TERMINATION WITHIN THE INSTRUMENT CLUSTER	
	1 Measure the resistance between pins 22 and 08 of the IC.
	Is the resistance 320 to 400 ohms? **Yes** Possible intermittent fault. Recheck DTCs. **No** INSTALL a new IC. REFER to: Instrument Cluster (413-01 Instrument Cluster, Removal and Installation). CLEAR the DTC, test the system for normal operation.

PINPOINT TEST I : SCP NETWORK MALFUNCTION, IN CAR ENTERTAINMENT (ICE) HEAD	
TEST CONDITIONS	**DETAILS/RESULTS/ACTIONS**
I1: CHECK ICE FOR DAMAGE	
	1 Inspect the ICE head for damage.
	Does the ICE head indicate any signs of damage? **Yes** INSTALL a new ICE head. REFER to: Audio Unit (415-01 Audio Unit, Removal and Installation). CLEAR the DTC, test the system for normal operation. **No** GO to I2.
I2: CHECK THE SCP + FOR SHORT CIRCUIT TO GROUND	
	1 Measure the resistance between the diagnostic connector, pin 02 (Y) and GROUND.
	Is the resistance less than 10,000 ohms? **Yes** REPAIR the short circuit. For additional information, refer to the wiring diagrams. CLEAR the DTC, test the system for normal operation. **No** GO to I3.
I3: CHECK THE SCP + FOR SHORT CIRCUIT TO BATTERY	
	1 Measure the resistance between the diagnostic connector, pins 02 (Y) and 16 (OY).
	Is the resistance less than 10,000 ohms? **Yes** REPAIR the short circuit. For additional information, refer to the wiring diagrams. CLEAR the DTC, test the system for normal operation. **No** GO to I4.
I4: CHECK THE SCP - FOR SHORT CIRCUIT TO GROUND	
	1 Measure the resistance between the diagnostic connector, pin 10 (U) and GROUND.
	Is the resistance less than 10,000 ohms? **Yes** REPAIR the short circuit. For additional information, refer to the wiring diagrams. CLEAR the DTC, test the system for normal operation. **No** GO to I5.
I5: CHECK THE SCP - FOR SHORT CIRCUIT TO BATTERY	
	1 Measure the resistance between the diagnostic connector, pins 10 (U) and 16 (OY).
	Is the resistance less than 10,000 ohms? **Yes** REPAIR the short circuit. For additional information, refer to the wiring diagrams. CLEAR the DTC, test the system for normal operation. **No** GO to I6.
I6: CHECK FOR SHORT CIRCUIT BETWEEN SCP + AND SCP -	
	1 Measure the resistance between the diagnostic connector, pins 10 (U) and 02 (Y).
	Is the resistance less than 10,000 ohms? **Yes** REPAIR the short circuit. For additional information, refer to the wiring diagrams. CLEAR the DTC, test the system for normal operation. **No** GO to I7.
I7: CHECK FOR OPEN CIRCUIT ON SCP + BETWEEN THE DIAGNOSTIC CONNECTOR AND THE ICE HEAD UNIT	

	1 Turn the ignition switch to the **OFF** position.
	2 Disconnect the battery negative terminal.
	3 Disconnect the ICE connector, IP65.
	4 Measure the resistance between the diagnostic connector, pin 02 (Y) and IP65, pin 09 (Y).
	Is the resistance greater than 5 ohms? **Yes** REPAIR the high resistance circuit. For additional information, refer to the wiring diagrams. CLEAR the DTC, test the system for normal operation. **No** GO to I8.
I8: CHECK FOR OPEN CIRCUIT ON SCP - BETWEEN THE DIAGNOSTIC CONNECTOR AND THE ICE HEAD UNIT	
	1 Measure the resistance between the diagnostic connector, pin 10 (U) and IP65, pin 10 (U).
	Is the resistance greater than 5 ohms? **Yes** REPAIR the high resistance circuit. For additional information, refer to the wiring diagrams. CLEAR the DTC, test the system for normal operation. **No** GO to I9.
I9: CHECK FOR CORRECT BUS TERMINATION ON SCP +	
	1 Reconnect the ICE connector, IP65.
	2 Reconnect the battery negative terminal.
	3 Measure the resistance between the diagnostic connector, pin 02 (Y) and GROUND.
	Is the resistance 150 to 210 ohms? **Yes** INSTALL a new ICE head unit. REFER to: Audio Unit (415-01 Audio Unit, Removal and Installation). CLEAR the DTC, test the system for normal operation. **No** GO to I10.
I10: CHECK THE CONTINUITY OF THE GENERIC ELECTRONIC MODULE (GEM) SCP + CIRCUIT	
	1 Turn the ignition switch to the **OFF** position.
	2 Disconnect the battery negative terminal.
	3 Disconnect the GEM connector, IP05.
	4 Measure the resistance between IP22, pin 02 (Y) and IP05, pin 19 (Y).
	Is the resistance greater than 5 ohms? **Yes** REPAIR the high resistance circuit. For additional information, refer to the wiring diagrams. CLEAR the DTC, test the system for normal operation. **No** GO to I11.
I11: CHECK FOR LOSS OF SCP + TERMINATION WITHIN THE GEM	
	1 Disconnect the GEM connector, IP06.
	2 Measure the resistance between IP05, pin 19, and IP06, pin 01 of the GEM.
	Is the resistance 320 to 400 ohms? **Yes** GO to I12. **No** INSTALL a new GEM. REFER to: Generic Electronic Module (GEM) (419-10 Multifunction Electronic Modules, Removal and Installation).
I12: CHECK CONTINUITY OF THE IC SCP + CIRCUIT	
	1 Disconnect the IC connector, IP10.
	2 Measure the resistance between the diagnostic connector, pin 02 (Y) and IP10, pin 22 (Y).
	Is the resistance greater than 5 ohms? **Yes** REPAIR the high resistance circuit. For additional information, refer to the wiring diagrams. CLEAR the DTC, test the system for normal operation. **No** GO to I13.
I13: CHECK FOR LOSS OF SCP + TERMINATION WITHIN THE IC	
	1 Measure the resistance between IP10, pin 22 (Y) and IP11, pin 08 of the IC.
	Is the resistance 320 to 400 ohms? **Yes** Possible intermittent fault. Recheck DTCs. **No** INSTALL a new IC. REFER to: Instrument Cluster (413-01 Instrument Cluster, Removal and Installation). CLEAR the DTC, test the system for normal operation.

PINPOINT TEST J : U2003: COMPACT DISC CHANGER NOT RESPONDING

CAUTION: The following tests involve disconnection of the fibre optic harnesses. The harness connectors must be protected by suitable dust caps as soon as they are disconnected, or damage may result. The use of tools to unlatch connectors must be avoided, or the connector locking function may be lost. Failure to follow this instruction may result in damage to the vehicle.

• NOTE: The following test sequence is based on a five node network. Refer to the wiring diagrams for network configuration for networks with a different number of nodes (all possible network combinations are shown in the wiring diagrams).

• NOTE: Should a break occur in the D2B ring, then codes, U2602, or U2603 will be set, depending on the location of the break. U2602 will set if the break is in the optical harness **FROM** the ICE head unit (the transmitter signal). U2603 will set if the break is in the optical harness **TO** the ICE head unit (the receiver signal). GO to Pinpoint Test P. GO to Pinpoint Test Q.

TEST CONDITIONS	DETAILS/RESULTS/ACTIONS
J1: CHECK CD CHANGER MODULE, USING OPTICAL BUS TESTER	
	1 Connect the Optical Bus Tester to the fibre optic lead connector, CD02.
	2 Set the Optical Bus Tester to **BY-PASS**.
	3 Clear the DTC.
	4 Turn the ignition switch to the **ACC** position.
	5 Wait for 10 seconds.

	6 Check for 'not responding' DTCs.
	Is U2003 set? **Yes** CHECK the 'wake-up' signal to the module. **No** GO to J2.
J2: CHECK FOR DTC U2602 OR U2603	
	1 Check DTCs.
	Are codes U2602 or U2603 logged? **Yes** CHECK for break in optical harness. **No** Recheck DTCs. No break in optical harness.

PINPOINT TEST K : ONE OR MORE D2B MODULES NOT RESPONDING. 'WAKE-UP' SIGNAL FAULT

• NOTE: The D2B 'wake-up' signal is not a constant, but will generate a pulse at each cycle of the ignition key. The ignition key must be turned to the OFF position following each step of the tests, and turned to the position indicated by the test step for each module. To avoid missing the signal, use an assistant to operate the key while reading the oscilloscope. The 'wake-up' line is battery voltage, switching to 0 volts for between 50 milliseconds and 110 milliseconds as the ICE head unit sends it's signal.

TEST CONDITIONS	DETAILS/RESULTS/ACTIONS
K1: CHECK THE 'WAKE-UP' SIGNAL TO THE CD CHANGER	
	1 Disconnect the CD changer connector, CA301.
	2 Turn the ignition switch to the **ACC** position.
	3 Measure the voltage between CA301, pin 03 (O) and GROUND, using an oscilloscope (see note above).
	Does the oscilloscope show a 'wake-up' signal as described? **Yes** GO to K2. **No** REPAIR the circuit between CA301, pin 03 and the ICE head unit connector, IP65, pin 19. For additional information, refer to the wiring diagrams. CLEAR the DTC. TEST the system for normal operation.
K2: CHECK THE 'WAKE-UP' SIGNAL TO THE VOICE ACTIVATED CONTROL MODULE	
	1 Disconnect the voice activated control module connector, PH02.
	2 Turn the ignition switch to the **ACC** position.
	3 Measure the voltage between PH02, pin 14 (O) and GROUND, using an oscilloscope (see note above).
	Does the oscilloscope show a 'wake-up' signal as described? **Yes** GO to K3. **No** REPAIR the circuit between PH02, pin 14 and the ICE head unit connector, IP65, pin 19. For additional information, refer to the wiring diagrams. CLEAR the DTC. TEST the system for normal operation.
K3: CHECK THE 'WAKE-UP' SIGNAL TO THE 'PHONE MODULE	
	1 Disconnect the 'phone module connector, PH01.
	2 Turn the ignition switch to the **ACC** position.
	3 Measure the voltage between PH01, pin 23 (O) and GROUND, using an oscilloscope (see note above).
	Does the oscilloscope show a 'wake-up' signal as described? **Yes** GO to K4. **No** REPAIR the circuit between PH01, pin 23 and the ICE head unit connector, IP65, pin 19. For additional information, refer to the wiring diagrams. CLEAR the DTC, test the system for normal operation.
K4: CHECK THE 'WAKE-UP' SIGNAL TO THE NAVIGATION COMPUTER	
	1 Disconnect the navigation system connector, NA07.
	2 Turn the ignition switch to the **ACC** position.
	3 Measure the voltage between NA07, pin 03 (O) and GROUND, using an oscilloscope (see note above).
	Does the oscilloscope show a 'wake-up' signal as described? **Yes** GO to K5. **No** REPAIR the circuit between NA07, pin 03 and the ICE head unit connector, IP65, pin 19. For additional information, refer to the wiring diagrams. CLEAR the DTC, test the system for normal operation.
K5: CHECK THE 'WAKE-UP' SIGNAL TO THE AMPLIFIER	
	1 Disconnect the amplifier connector, CA425.
	2 Turn the ignition switch to the **ACC** position.
	3 Measure the voltage between CA425, pin 05 (O) and GROUND, using an oscilloscope (see note above).
	Does the oscilloscope show a 'wake-up' signal as described? **Yes** CHECK for DTCs indicating a module failure. **No** REPAIR the circuit between CA425, pin 05 and the ICE head unit connector, IP65, pin 19. For additional information, refer to the wiring diagrams. CLEAR the DTC, test the system for normal operation.

PINPOINT TEST L : U2008: 'PHONE MODULE NOT RESPONDING

TEST CONDITIONS	DETAILS/RESULTS/ACTIONS
L1: CHECK 'PHONE MODULE, USING OPTICAL BUS TESTER	
	1 Connect the Optical Bus Tester to the fibre optic lead connector, CD03.
	2 Set the Optical Bus Tester to **BY-PASS**.
	3 Clear the DTC.
	4 Turn the ignition switch to the **ACC** position.
	5 Wait for 10 seconds.
	6 Check for 'not responding' DTCs.
	Is U2008 set? **Yes** CHECK the 'wake-up' signal to the module. **No** GO to L2.

L2: CHECK FOR DTC U2602 OR U2603	
	1 Check DTCs.
	Are codes U2602 or U2603 logged? **Yes** CHECK for break in optical harness. **No** RECHECK DTCs. No break in optical harness.

PINPOINT TEST M : U2019: VOICE CONTROL MODULE NOT RESPONDING	
TEST CONDITIONS	**DETAILS/RESULTS/ACTIONS**
M1: CHECK VOICE CONTROL MODULE, USING OPTICAL BUS TESTER	
	1 Connect the Optical Bus Tester to the fibre optic lead connector, CD04.
	2 Set the Optical Bus Tester to **BY-PASS**.
	3 Clear the DTC.
	4 Turn the ignition switch to the **ACC** position.
	5 Wait for 10 seconds.
	6 Check for 'not responding' DTCs.
	Is U2019 set? **Yes** CHECK the 'wake-up' signal to the module. **No** GO to M2.
M2: CHECK FOR DTC U2602 OR U2603	
	1 Check DTCs.
	Are codes U2602 or U2603 logged? **Yes** CHECK for break in optical harness. **No** RECHECK DTCs. No break in optical harness.

PINPOINT TEST N : U2613: NAVIGATION CONTROL MODULE NOT RESPONDING	
TEST CONDITIONS	**DETAILS/RESULTS/ACTIONS**
N1: CHECK NAVIGATION CONTROL MODULE, USING OPTICAL BUS TESTER	
	1 Connect the Optical Bus Tester to the fibre optic connector, CD05.
	2 Set the Optical Bus Tester to **BY-PASS**.
	3 Clear the DTC.
	4 Turn the ignition switch to the **ACC** position.
	5 Wait for 10 seconds.
	6 Check for DTCs.
	Is U2613 set? **Yes** CHECK the 'wake-up' signal to the module. **No** GO to N2.
N2: CHECK FOR DTC U2602 OR U2603	
	1 Check DTCs.
	Are codes U2602 or U2603 logged? **Yes** CHECK for break in optical harness. **No** RECHECK DTCs. No break in optical harness.

PINPOINT TEST O : U2614: AMPLIFIER NOT RESPONDING	
TEST CONDITIONS	**DETAILS/RESULTS/ACTIONS**
O1: CHECK AMPLIFIER, USING OPTICAL BUS TESTER	
	1 Connect the Optical Bus Tester to the fibre optic connector, CD07.
	2 Set the Optical Bus Tester to **BY-PASS**.
	3 Clear the DTC.
	4 Turn the ignition switch to the **ACC** position.
	5 Wait for 10 seconds.
	6 Check for DTCs.
	Is U2614 set? **Yes** CHECK the 'wake-up' signal to the module. **No** GO to O2.
O2: CHECK FOR DTC U2602 OR U2603	
	1 Check DTCs.
	Are codes U2602 or U2603 logged? **Yes** CHECK for break in optical harness. **No** RECHECK DTCs. No break in optical harness.

PINPOINT TEST P : U2602: BREAK IN OPTICAL HARNESS FROM ICE HEAD UNIT (TRANSMITTER)	
TEST CONDITIONS	**DETAILS/RESULTS/ACTIONS**
P1: CHECK FIBRE OPTIC LEAD BETWEEN LUGGAGE COMPARTMENT JOINT AND CD CHANGER	
	1 Disconnect the fibre optic connector, CD02.
	2 Disconnect the fibre optic connector, CD06.
	3 Connect the Optical Bus Tester to the fibre optic connector, CD06.
	4 Set the Optical Bus Tester to **TX**.
	5 Set the Optical Bus Tester to **ON**.

	6 Check for light pulses at the receiver pin of disconnected D2B connector, CD02.
	Are light pulses visible? **Yes** GO to P2. **No** INSTALL a new telematic harness between CD06 and CD02. For additional information, refer to the wiring diagrams. CLEAR the DTC, test the system for normal operation.
P2: CHECK CABIN FIBRE OPTIC HARNESS	
	1 Disconnect the fibre optic connector, CD01.
	2 Disconnect the fibre optic connector, CD06.
	3 Connect the Optical Bus Tester to CD01 using adaptor lead.
	4 Set the Optical Bus Tester to **TX**.
	5 Set the Optical Bus Tester to **ON**.
	6 Check for light pulses at the receiver pin of disconnected D2B connector, CD06.
	Are light pulses visible? **Yes** GO to P3. **No** INSTALL a new cabin optical harness between CD06 and CD01. For additional information, refer to the wiring diagrams. CLEAR the DTC, test the system for normal operation.
P3: CHECK FIBRE OPTIC LEAD BETWEEN 'A' POST AND ICE HEAD UNIT	
	1 Disconnect the fibre optic connector, ID01.
	2 Connect the Optical Bus Tester to ID01 using the adaptor lead.
	3 Set the Optical Bus Tester to **TX**.
	4 Set the Optical Bus Tester to **ON**.
	5 Check for light pulses at the receiver pin of disconnected D2B connector, CD001.
	Are light pulses visible? **Yes** GO to P4. **No** INSTALL a new instrument optical harness between CD01 and ID01. For additional information, refer to the wiring diagrams. CLEAR the DTC, test the system for normal operation.
P4: CHECK THE ICE HEAD UNIT	
	1 Turn the ignition switch to the **ACC** position.
	2 Wait for 10 seconds.
	3 Check for light pulses at the transmitter pin of disconnected D2B connector, ID01 (rear of ICE head unit).
	Are light pulses visible? **Yes** GO to P5. **No** INSTALL a new ICE head unit, REFER to: Audio Unit (415-01 Audio Unit, Removal and Installation). CLEAR the DTC, test the system for normal operation.
P5: CHECK THE FIBRE OPTIC LEAD FROM THE CD CHANGER TO THE 'PHONE MODULE	
	1 Disconnect the fibre optic connector CD02.
	2 Disconnect the fibre optic connector CD03.
	3 Connect the Optical Bus Tester to CD02.
	4 Set the Optical Bus Tester to **TX**.
	5 Set the Optical Bus Tester to **ON**.
	6 Check for light pulses at the transmitter pin of disconnected D2B connector, CD03.
	Are light pulses visible? **Yes** GO to P6. **No** INSTALL a new telematic harness between CD03 and CD02. For additional information, refer to the wiring diagrams. CLEAR the DTC, test the system for normal operation.
P6: CHECK THE FIBRE OPTIC LEAD FROM THE 'PHONE MODULE TO THE VOICE MODULE	
	1 Disconnect the fibre optic connector CD04.
	2 Connect the Optical Bus Tester to CD03.
	3 Set the Optical Bus Tester to **TX**.
	4 Set the Optical Bus Tester to **ON**.
	5 Check for light pulses at the transmitter pin of disconnected D2B connector, CD04.
	Are light pulses visible? **Yes** GO to P7. **No** INSTALL a new telematic harness between CD03 and CD04. For additional information, refer to the wiring diagrams. CLEAR the DTC, test the system for normal operation.
P7: CHECK THE FIBRE OPTIC LEAD FROM THE VOICE MODULE TO THE NAVIGATION COMPUTER	
	1 Disconnect the fibre optic connector CD04.
	2 Disconnect the fibre optic connector CD05.
	3 Connect the Optical Bus Tester to CD04.
	4 Set the Optical Bus Tester to **TX**.
	5 Set the Optical Bus Tester to **ON**.
	6 Check for light pulses at the transmitter pin of disconnected D2B connector, CD05.
	Are light pulses visible? **Yes** GO to P8. **No** INSTALL a new telematic harness between CD05 and CD04. For additional information, refer to the wiring diagrams. CLEAR the DTC, test the system for normal operation.
P8: CHECK THE FIBRE OPTIC LEAD FROM THE NAVIGATION COMPUTER TO THE AMPLIFIER	
	1 Disconnect the fibre optic connector CD07.
	2 Disconnect the fibre optic connector CD05.

	3 Connect the Optical Bus Tester to CD05.
	4 Set the Optical Bus Tester to **TX**.
	5 Set the Optical Bus Tester to **ON**.
	6 Check for light pulses at the transmitter pin of disconnected D2B connector, CD07.
	Are light pulses visible? **Yes** CHECK for DTC U2603. **No** INSTALL a new telematic harness between CD05 and CD07. For additional information, refer to the wiring diagrams. CLEAR the DTC, test the system for normal operation.

PINPOINT TEST Q : U2603: BREAK IN OPTICAL HARNESS TO ICE HEAD UNIT (RECEIVER)	
TEST CONDITIONS	**DETAILS/RESULTS/ACTIONS**
Q1: CHECK FIBRE OPTIC LEAD BETWEEN LUGGAGE COMPARTMENT JOINT AND AMPLIFIER	
	1 Disconnect the fibre optic connector, CD06.
	2 Disconnect the fibre optic connector, CD07.
	3 Connect the Optical Bus Tester to CD07.
	4 Set the Optical Bus Tester to **TX**.
	5 Set the Optical Bus Tester to **ON**.
	6 Check for light pulses at the receiver pin of disconnected D2B connector, CD06.
	Are light pulses visible? **Yes** GO to Q2. **No** INSTALL a new telematic harness between CD06 and C07. For additional information, refer to the wiring diagrams. CLEAR the DTC, test the system for normal operation.
Q2: CHECK CABIN FIBRE OPTIC HARNESS	
	1 Disconnect the fibre optic connector, CD01.
	2 Disconnect the fibre optic connector, CD06.
	3 Connect the Optical Bus Tester to CD06 using adaptor lead.
	4 Set the Optical Bus Tester to **TX**.
	5 Set the Optical Bus Tester to **ON**.
	6 Check for light pulses at the receiver pin of disconnected D2B connector, CD01.
	Are light pulses visible? **Yes** GO to Q3. **No** INSTALL a new cabin optical harness between CD06 and CD01. For additional information, refer to the wiring diagrams. CLEAR the DTC, test the system for normal operation.
Q3: CHECK FIBRE OPTIC LEAD BETWEEN 'A' POST AND ICE HEAD UNIT	
	1 Connect the Optical Bus Tester to ID01.
	2 Set the Optical Bus Tester to **TX**.
	3 Set the Optical Bus Tester to **ON**.
	4 Check for light pulses at the receiver pin of disconnected D2B connector, ID01.
	Are light pulses visible? **Yes** GO to Q4. **No** INSTALL a new instrument optical harness between CD01 and ID01. For additional information, refer to the wiring diagrams. CLEAR the DTC, test the system for normal operation.
Q4: CHECK THE ICE HEAD UNIT	
	1 Connect the optical short link between the receiver and transmitter of the ICE head unit.
	2 Turn the ignition switch to the **ACC** position.
	3 Wait for 10 seconds.
	4 Check for DTC.
	Is U2603 logged? **Yes** INSTALL a new ICE head unit, REFER to: Audio Unit (415-01 Audio Unit, Removal and Installation). CLEAR the DTC. TEST the system for normal operation. **No** RECHECK DTCs. No fault found in D2B system.

PINPOINT TEST R : ONE OR MORE D2B MODULES NOT RESPONDING. PERMANENT SUPPLY FAULT	
TEST CONDITIONS	**DETAILS/RESULTS/ACTIONS**
R1: CHECK THE PERMANENT SUPPLY TO THE CD CHANGER	
	1 Disconnect the CD changer connector, CA301.
	2 Measure the voltage between CA301, pin 02 (OY) and GROUND.
	Is the voltage less than 10 volts? **Yes** REPAIR the circuit between the CD changer connector, CA301, pin 02, and fuse 72 of the central junction fuse box. For additional information, refer to the wiring diagrams. CLEAR the DTC, test the system for normal operation. **No** CHECK the module for GROUND. INSTALL a new CD Changer. REFER to: Compact Disc (CD) Changer - 4-Door (415-01 Audio Unit, Removal and Installation). CLEAR the DTC, test the system for normal operation.GO to R2.
R2: CHECK THE PERMANENT SUPPLY TO THE VOICE ACTIVATED CONTROL MODULE	
	1 Disconnect the voice activated control module connector, PH02.
	2 Measure the voltage between PH02, pin 22 (NR) and GROUND.

	Is the voltage less than 10 volts? **Yes** REPAIR the circuit between the voice activated control module connector, PH02, pin 22, and fuse 71 of the central junction fuse box. For additional information, refer to the wiring diagrams. CLEAR the DTC, test the system for normal operation. **No** CHECK the module for GROUND. INSTALL a new VACM. REFER to: Multifunction Voice Activated Module - 4-Door (419-10 Multifunction Electronic Modules, Removal and Installation). CLEAR the DTC, test the system for normal operation.GO to R3.
R3: CHECK THE PERMANENT SUPPLY TO THE 'PHONE MODULE	
	1 Disconnect the 'phone module connector, PH01.
	2 Measure the voltage between PH01, pins 12 and 13 (NR) and GROUND.
	Is the voltage less than 10 volts? **Yes** REPAIR the circuit between the 'phone module connector, PH01, pins 12 and 13 and fuse 71 of the central junction fuse box. For additional information, refer to the wiring diagrams. CLEAR the DTC, test the system for normal operation. **No** CHECK the module for GROUND. INSTALL a new 'phone module. REFER to: Module - 4-Door (419-08 Cellular Phone, Removal and Installation). CLEAR the DTC, test the system for normal operation.GO to R4.
R4: CHECK THE PERMANENT SUPPLY TO THE NAVIGATION MODULE	
	1 Disconnect the navigation module connector, NA07.
	2 Measure the voltage between NA07, pin 01 (OY) and GROUND.
	Is the voltage less than 10 volts? **Yes** Repair the circuit between the navigation module connector, NA07, pin 01 and fuse 72 of the central junction fuse box. For additional information, refer to the wiring diagrams. CLEAR the DTC, test the system for normal operation. **No** CHECK the module for GROUND. INSTALL a new navigation module. REFER to: Navigation System Module - 4-Door (419-07 Navigation System, Removal and Installation). CLEAR the DTC, test the system for normal operation.GO to R5.
R5: CHECK THE PERMANENT SUPPLY TO THE AMPLIFIER	
	1 Disconnect the amplifier connector, CA425.
	2 Measure the voltage between CA425, pin 09 (NR) and GROUND.
	3 Measure the voltage between CA425, pin 03 (NR) and GROUND.
	Is either voltage less than 10 volts? **Yes** Repair the circuit between the amplifier connector, CA425 and fuse 20 of the primary junction box. For additional information, refer to the wiring diagrams. CLEAR the DTC, test the system for normal operation. **No** CHECK the module for GROUND. INSTALL a new amplifier. CLEAR the DTC, test the system for normal operation.

PINPOINT TEST S : ONE OR MORE D2B MODULES NOT RESPONDING. ACCESSORY SWITCHED SUPPLY FAULT

TEST CONDITIONS	DETAILS/RESULTS/ACTIONS
S1: CHECK THE ACCESSORY SWITCHED SUPPLY TO THE VOICE ACTIVATED CONTROL MODULE	
	1 Disconnect the voice activated control module connector, PH02.
	2 Turn the ignition switch to the **ACC** position.
	3 Measure the voltage between PH02, pin 08 (YG) and GROUND.
	Is the voltage less than 10 volts? **Yes** REPAIR the circuit between the voice activated control module connector, PH02, pin 08 and the ignition switch. For additional information, refer to the wiring diagrams. CLEAR the DTC, test the system for normal operation. (This circuit includes the central junction fuse box, fuse 69) . **No** GO to S2.
S2: CHECK THE ACCESSORY SWITCHED SUPPLY TO THE 'PHONE MODULE	
	1 Disconnect the 'phone module connector, PH01.
	2 Turn the ignition switch to the **ACC** position.
	3 Measure the voltage between PH01, pin 14 (YG) and GROUND.
	Is the voltage less than 10 volts? **Yes** REPAIR the circuit between the 'phone module connector, PH01, pin 14 and the ignition switch. This circuit includes the central junction fuse box, fuse 69. For additional information, refer to the wiring diagrams. CLEAR the DTC, test the system for normal operation. **No** GO to S3.
S3: CHECK THE ACCESSORY SWITCHED SUPPLY TO THE NAVIGATION MODULE	
	1 Disconnect the navigation module electrical connector, NA07.
	2 Turn the ignition switch to the **ACC** position.
	3 Measure the voltage between NA07, pin 11 (YG) and GROUND.
	Is the voltage less than 10 volts? **Yes** REPAIR the circuit between the navigation module connector, NA07, pin 11 and the ignition switch. This circuit includes the central junction fuse box, fuse 69. For additional information, refer to the wiring diagrams. CLEAR the DTC, test the system for normal operation. **No** CHECK the module for GROUND. INSTALL a new navigation module. REFER to: Navigation System Module - 4-Door (419-07 Navigation System, Removal and Installation). CLEAR the DTC, test the system for normal operation.

PINPOINT TEST T : ONE OR MORE D2B MODULES NOT RESPONDING. IGNITION SWITCHED SUPPLY FAULT

TEST CONDITIONS	DETAILS/RESULTS/ACTIONS

T1: CHECK THE IGNITION SWITCHED SUPPLY TO THE VOICE ACTIVATED CONTROL MODULE	
	1 Disconnect the voice activated control module connector, PH02.
	2 Turn the ignition switch to the **ON** position.
	3 Measure the voltage between PH02, pin 06 (WR) and GROUND.
	Is the voltage less than 10 volts? **Yes** REPAIR the circuit between the voice activated control module connector, PH02, pin 06 and the central junction fuse box, fuse 67. For additional information, refer to the wiring diagrams. CLEAR the DTC, test the system for normal operation. **No** GO to T2.
T2: CHECK THE IGNITION SWITCHED SUPPLY TO THE 'PHONE MODULE	
	1 Disconnect the 'phone module connector, PH01.
	2 Turn the ignition switch to the **ON** position.
	3 Measure the voltage between PH01, pin 29 (Y) and GROUND.
	Is the voltage less than 10 volts? **Yes** REPAIR the circuit between the 'phone module connector, PH01, pin 29 and the central junction fuse box, fuse 78. For additional information, refer to the wiring diagrams. CLEAR the DTC, test the system for normal operation. **No** Check the module for GROUND. INSTALL a new 'phone module. REFER to: Module - 4-Door (419-08 Cellular Phone, Removal and Installation). CLEAR the DTC, test the system for normal operation.

PINPOINT TEST U : IC SUPPLY OR GROUND FAULT	
TEST CONDITIONS	**DETAILS/RESULTS/ACTIONS**
U1: CHECK THE B+ SUPPLY TO THE IC	
	1 Disconnect the IC connector, IP11.
	2 Measure the voltage between IP11, pin 07 (OG) and GROUND.
	Is the voltage less than 10 volts? **Yes** REPAIR the circuit between IP11, pin 07 and battery. This circuit includes the primary junction box, fuse 45. For additional information, refer to the wiring diagrams. **No** GO to U2.
U2: CHECK THE ACC SUPPLY TO THE IC	
	1 Turn the ignition switch to the **ACC** position.
	2 Measure the voltage between IP11, pin 13 (YU) and GROUND.
	Is the voltage less than 10 volts? **Yes** REPAIR the circuit between IP11, pin 13 and battery. This circuit includes the primary junction box, fuse 43. For additional information, refer to the wiring diagrams. **No** GO to U3.
U3: CHECK THE IGNITION SUPPLY TO THE IC	
	1 Turn the ignition switch to the **IGN** position.
	2 Measure the voltage between IP11, pin 11 (GR) and GROUND.
	Is the voltage less than 10 volts? **Yes** REPAIR the circuit between IP11, pin 11 and battery. This circuit includes the primary junction box, fuse 54. For additional information, refer to the wiring diagrams. **No** GO to U4.
U4: CHECK THE GROUND TO THE IC	
	1 Measure the resistance between IP11, pin 08 (B) and GROUND.
	Is the resistance greater than 5 ohms? **Yes** REPAIR the high resistance circuit. For additional information, refer to the wiring diagrams. **No** No fault found with power or ground supplies. Check for DTCs indicating a module fault.

PINPOINT TEST V : SWRS SUPPLY OR GROUND FAULT	
TEST CONDITIONS	**DETAILS/RESULTS/ACTIONS**
V1: CHECK THE MODULE SUPPLY TO THE SWRS	
	1 Disconnect the SWRS connector, IP19.
	2 Turn the ignition switch to the **ON** position.
	3 Measure the voltage between IP19, pin 02 (GW) and GROUND.
	Is the voltage less than 4 volts? **Yes** GO to V2. **No** GO to V3.
V2: CHECK THE MODULE SUPPLY CIRCUIT TO THE SWRS FOR HIGH RESISTANCE	
	1 Turn the ignition switch to the **OFF** position.
	2 Disconnect the DSC module connector, JB185.
	3 Measure the resistance between IP19, pin 02 (GW) and JB185, pin 39 (GW).
	Is the resistance greater than 5 ohms? **Yes** REPAIR the high resistance circuit. For additional information, refer to the wiring diagrams. **No** GO to V3.
V3: CHECK THE GROUND TO THE SWRS	
	1 Reconnect the DSC module connector, JB185.
	2 Measure the resistance between IP19, pin 08 (U) and GROUND.

	Is the resistance greater than 5 ohms? **Yes** REPAIR the high resistance circuit. For additional information, refer to the wiring diagrams. **No** No fault found with power or ground supplies. Check for DTCs indicating a module fault.

PINPOINT TEST W : YAW RATE SENSOR SUPPLY OR GROUND FAULT	
TEST CONDITIONS	**DETAILS/RESULTS/ACTIONS**
W1: CHECK THE MODULE SUPPLY TO THE YAW RATE SENSOR	
	1 Disconnect the yaw rate sensor connector, IP20.
	2 Turn the ignition switch to the **ON** position.
	3 Measure the voltage between IP20, pin 04 (GW) and GROUND.
	Is the voltage less than 4 volts? **Yes** GO to W2. **No** GO to W3.
W2: CHECK THE MODULE SUPPLY CIRCUIT TO THE YAW RATE SENSOR FOR HIGH RESISTANCE	
	1 Turn the ignition switch to the **OFF** position.
	2 Disconnect the DSC module connector, JB185.
	3 Measure the resistance between IP20, pin 04 (GW) and JB185, pin 39 (GW).
	Is the resistance greater than 5 ohms? **Yes** REPAIR the high resistance circuit. For additional information, refer to the wiring diagrams. **No** GO to W3.
W3: CHECK THE GROUND TO THE YAW RATE SENSOR	
	1 Measure the resistance between IP20, pin 01 (U) and GROUND.
	Is the resistance greater than 5 ohms? **Yes** REPAIR the high resistance circuit. For additional information, refer to the wiring diagrams. **No** No fault found with power or ground supplies. Check for DTCs indicating a module fault.

PINPOINT TEST X : ABS/TCCM SUPPLY OR GROUND FAULT	
TEST CONDITIONS	**DETAILS/RESULTS/ACTIONS**
X1: CHECK THE IGNITION SUPPLY TO THE ABS/TC MODULE	
	1 Disconnect the ABS/TCCM connector, JB45.
	2 Turn the ignition switch to the **ON** position.
	3 Measure the voltage between JB45, pin 23 (GW) and GROUND.
	Is the voltage less than 10 volts? **Yes** REPAIR the circuit between JB45, pin 23 and battery. This circuit includes the front power distribution box, fuse 13 and the ignition relay. For additional information, refer to the wiring diagrams. **No** GO to X2.
X2: CHECK THE PUMP+ SUPPLY TO THE ABS/TCCM	
	1 Turn the ignition switch to the **ON** position.
	2 Measure the voltage between JB45, pin 02 (R) and GROUND.
	Is the voltage less than 10 volts? **Yes** REPAIR the circuit between JB45, pin 02 and battery. This circuit includes the front power distribution box, fuse 41. For additional information, refer to the wiring diagrams. **No** GO to X3.
X3: CHECK THE SOLENOID+ SUPPLY TO THE ABS/TCCM	
	1 Turn the ignition switch to the **ON** position.
	2 Measure the voltage between JB45, pin 06 (R) and GROUND.
	Is the voltage less than 10 volts? **Yes** REPAIR the circuit between JB45, pin 06 and battery. This circuit includes the front power distribution box, fuse 41. For additional information, refer to the wiring diagrams. **No** GO to X4.
X4: CHECK THE GROUND TO THE ABS/TCCM	
	1 Turn the ignition switch to the **OFF** position.
	2 Measure the resistance between JB45, pin 05 (B) and GROUND.
	Is the resistance greater than 5 ohms? **Yes** REPAIR the high resistance circuit. For additional information, refer to the wiring diagrams. **No** GO to X5.
X5: CHECK THE MOTOR GROUND TO THE ABS/TCCM	
	1 Measure the resistance between JB45, pin 01 (B) and GROUND.
	Is the resistance greater than 5 ohms? **Yes** REPAIR the high resistance circuit. For additional information, refer to the wiring diagrams. **No** No fault found with power or ground supplies. Check for DTCs indicating a module fault.

PINPOINT TEST Y : DSC MODULE SUPPLY OR GROUND FAULT	
TEST CONDITIONS	**DETAILS/RESULTS/ACTIONS**
Y1: CHECK THE IGNITION SUPPLY TO THE DSC MODULE	
	1 Disconnect the DSC module connector, JB185.

	2 Turn the ignition switch to the **ON** position.
	3 Measure the voltage between JB185, pin 23 (GW) and GROUND.
	Is the voltage less than 10 volts? **Yes** REPAIR the circuit between JB45, pin 23 and battery. This circuit includes the front power distribution box, fuse 13 and the ignition relay. For additional information, refer to the wiring diagrams. **No** GO to Y2.
Y2: CHECK THE PUMP+ SUPPLY TO THE DSC MODULE	
	1 Turn the ignition switch to the **ON** position.
	2 Measure the voltage between JB185, pin 02 (R) and GROUND.
	Is the voltage less than 10 volts? **Yes** REPAIR the circuit between JB185, pin 02 and battery. This circuit includes the front power distribution box, fuse 41. For additional information, refer to the wiring diagrams. **No** GO to Y3.
Y3: CHECK THE SOLENOID+ SUPPLY TO THE DSC MODULE	
	1 Turn the ignition switch to the **ON** position.
	2 Measure the voltage between JB185, pin 06 (R) and GROUND.
	Is the voltage less than 10 volts? **Yes** REPAIR the circuit between JB185, pin 06 and battery. This circuit includes the front power distribution box, fuse 41. For additional information, refer to the wiring diagrams. **No** GO to Y4.
Y4: CHECK THE GROUND TO THE DSC MODULE	
	1 Turn the ignition switch to the **OFF** position.
	2 Measure the resistance between JB185, pin 05 (B) and GROUND.
	Is the resistance greater than 5 ohms? **Yes** REPAIR the high resistance circuit. For additional information, refer to the wiring diagrams. **No** GO to Y5.
Y5: CHECK THE MOTOR GROUND TO THE DSC MODULE	
	1 Measure the resistance between JB185, pin 01 (B) and GROUND.
	Is the resistance greater than 5 ohms? **Yes** REPAIR the high resistance circuit. For additional information, refer to the wiring diagrams. **No** No fault found with power or ground supplies. Check for DTCs indicating a module fault.

PINPOINT TEST Z : GSI MODULE SUPPLY OR GROUND FAULT

TEST CONDITIONS	DETAILS/RESULTS/ACTIONS
Z1: CHECK THE IGNITION SUPPLY TO THE GSI MODULE	
	1 Disconnect the GSI module connector, IP14.
	2 Turn the ignition switch to the **ON** position.
	3 Measure the voltage between IP14, pin 01 (WR) and GROUND.
	Is the voltage less than 10 volts? **Yes** REPAIR the circuit between IP14, pin 01 and battery. This circuit includes the primary junction box, fuse 50. For additional information, refer to the wiring diagrams. **No** GO to Z2.
Z2: CHECK THE GROUND TO THE GSI MODULE	
	1 Measure the resistance between IP14, pin 02 (B) and GROUND.
	Is the resistance greater than 5 ohms? **Yes** REPAIR the high resistance circuit. For additional information, refer to the wiring diagrams. **No** No fault found with power or ground supplies. Check for DTCs indicating a module fault.

PINPOINT TEST AA : HID MODULE SUPPLY OR GROUND FAULT

TEST CONDITIONS	DETAILS/RESULTS/ACTIONS
AA1: CHECK THE IGNITION SUPPLY TO THE HID MODULE	
	1 Disconnect the HID module connector, IP130.
	2 Turn the ignition switch to the **ON** position.
	3 Measure the voltage between IP130, pin 23 (WR) and GROUND.
	Is the voltage less than 10 volts? **Yes** REPAIR the circuit between IP130, pin 23 and battery. This circuit includes the primary junction box, fuse 39. For additional information, refer to the wiring diagrams. **No** GO to AA2.
AA2: CHECK THE GROUND TO THE HID MODULE	
	1 Measure the resistance between IP130, pin 24 (B) and GROUND.
	Is the resistance greater than 5 ohms? **Yes** REPAIR the high resistance circuit. For additional information, refer to the wiring diagrams. **No** No fault found with power or ground supplies. Check for DTCs indicating a module fault.

PINPOINT TEST AB : EATC MODULE SUPPLY OR GROUND FAULT

TEST CONDITIONS	DETAILS/RESULTS/ACTIONS
AB1: CHECK THE B+ SUPPLY TO THE EATC MODULE	
	1 Disconnect the EATC module connector, IP101.
	2 Measure the voltage between IP101, pin 14 (OG) and GROUND.
	Is the voltage less than 10 volts? **Yes** REPAIR the circuit between IP101, pin 14 and battery. This circuit includes the primary junction box, fuse 45. For additional information, refer to the wiring diagrams. **No** GO to AB2.
AB2: CHECK THE IGNITION SUPPLY TO THE EATC MODULE	
	1 Turn the ignition switch to the **ON** position.
	2 Measure the voltage between IP101, pin 02 (WR) and GROUND.
	Is the voltage less than 10 volts? **Yes** REPAIR the circuit between IP101, pin 02 and battery. This circuit includes the primary junction box, fuse 39, and the ignition relay. For additional information, refer to the wiring diagrams. **No** GO to AB3.
AB3: CHECK THE B+ SAVE SUPPLY TO THE EATC MODULE	
	1 Turn the ignition switch to the **OFF** position.
	2 Measure the voltage between IP101, pin 01 (OY) and GROUND.
	Is the voltage less than 10 volts? **Yes** REPAIR the circuit between IP101, pin 01 and battery. This circuit includes the primary junction box, fuse 49, and the battery save relay. For additional information, refer to the wiring diagrams. **No** GO to AB4.
AB4: CHECK THE GROUND TO THE EATC MODULE	
	1 Measure the resistance between IP101, pin 15 (B) and GROUND.
	Is the resistance greater than 5 ohms? **Yes** REPAIR the high resistance circuit. For additional information, refer to the wiring diagrams. **No** No fault found with power or ground supplies. Check for DTCs indicating a module fault.

PINPOINT TEST AC : MEMORY SEAT MODULE SUPPLY OR GROUND FAULT

TEST CONDITIONS	DETAILS/RESULTS/ACTIONS
AC1: CHECK THE B+1 SUPPLY TO THE MEMORY SEAT MODULE	
	1 Disconnect the memory seat module connector, DM02.
	2 Measure the voltage between DM02, pin 01 (OG) and GROUND.
	Is the voltage less than 10 volts? **Yes** REPAIR the circuit between DM02, pin 01 and battery. This circuit includes the primary junction box, fuse 16. For additional information, refer to the wiring diagrams. **No** GO to AC2.
AC2: CHECK THE B+2 SUPPLY TO THE MEMORY SEAT MODULE	
	1 Measure the voltage between DM02, pin 06 (GB) and GROUND.
	Is the voltage less than 10 volts? **Yes** REPAIR the circuit between DM02, pin 06 and battery. This circuit includes the primary junction box, fuse 09. For additional information, refer to the wiring diagrams. **No** GO to AC3.
AC3: CHECK THE IGNITION SUPPLY TO THE MEMORY SEAT MODULE	
	1 Turn the ignition switch to the **ON** position.
	2 Measure the voltage between DM02, pin 04 (GB) and GROUND.
	Is the voltage less than 4 volts? **Yes** REPAIR the circuit between DM02, pin 04 and battery. This circuit includes the primary junction box, fuse 07. For additional information, refer to the wiring diagrams. **No** GO to AC4.
AC4: CHECK THE ELECTRONIC GROUND TO THE MEMORY SEAT MODULE	
	1 Turn the ignition switch to the **OFF** position.
	2 Measure the resistance between DM02, pin 10 (B) and GROUND.
	Is the resistance greater than 5 ohms? **Yes** REPAIR the high resistance circuit. For additional information, refer to the wiring diagrams. **No** GO to AC5.
AC5: CHECK THE POWER GROUND TO THE MEMORY SEAT MODULE	
	1 Measure the resistance between DM02, pin 05 (B) and GROUND.
	Is the resistance greater than 5 ohms? **Yes** REPAIR the high resistance circuit. For additional information, refer to the wiring diagrams. **No** GO to AC6.
AC6: CHECK THE SIGNAL GROUND TO THE MEMORY SEAT MODULE	
	1 Measure the resistance between DM02, pin 03 (B) and GROUND.

	Is the resistance greater than 5 ohms? **Yes** REPAIR the high resistance circuit. For additional information, refer to the wiring diagrams. **No** No fault found with power or ground supplies. Check for DTCs indicating a module fault.

PINPOINT TEST AD : TCM (16 BIT) SUPPLY OR GROUND FAULT	
TEST CONDITIONS	**DETAILS/RESULTS/ACTIONS**
AD1: CHECK THE B+ SUPPLY TO THE TCM	
	1 Disconnect the TCM connector, JB131.
	2 Measure the voltage between JB131, pin 06 (UY) and GROUND.
	Is the voltage less than 10 volts? **Yes** REPAIR the circuit between JB131, pin 06 and battery. This circuit includes the front power distribution box, fuse 32. For additional information, refer to the wiring diagrams. **No** GO to AD2.
AD2: CHECK THE IGNITION 1 SUPPLY TO THE TCM	
	1 Turn the ignition switch to the **ON** position.
	2 Measure the voltage between JB131, pin 36 (WU) and GROUND.
	Is the voltage less than 10 volts? **Yes** REPAIR the circuit between JB131, pin 36 and battery. This circuit includes the front power distribution box, fuse 11, and the ignition relay. For additional information, refer to the wiring diagrams. **No** GO to AD3.
AD3: CHECK THE IGNITION 2 SUPPLY TO THE TCM	
	1 Turn the ignition switch to the **ON** position.
	2 Measure the voltage between JB131, pin 54 (WU) and GROUND.
	Is the voltage less than 10 volts? **Yes** REPAIR the circuit between JB131, pin 54 and battery. This circuit includes the front power distribution box, fuse 11, and the ignition relay. For additional information, refer to the wiring diagrams. **No** GO to AD4.
AD4: CHECK THE GROUND 1 TO THE TCM	
	1 Turn the ignition switch to the **OFF** position.
	2 Measure the resistance between JB131, pin 09 (B) and GROUND.
	Is the resistance greater than 5 ohms? **Yes** REPAIR the high resistance circuit. For additional information, refer to the wiring diagrams. **No** GO to AD5.
AD5: CHECK THE GROUND 2 TO THE TCM	
	1 Measure the resistance between JB131, pin 38 (B) and GROUND.
	Is the resistance greater than 5 ohms? **Yes** REPAIR the high resistance circuit. For additional information, refer to the wiring diagrams. **No** No fault found with power or ground supplies. Check for DTCs indicating a module fault.

PINPOINT TEST AE : TCM (32 BIT) SUPPLY OR GROUND FAULT	
TEST CONDITIONS	**DETAILS/RESULTS/ACTIONS**
AE1: CHECK THE B+ SUPPLY TO THE TCM	
	1 Disconnect the TCM connector, JB231.
	2 Measure the voltage between JB231, pin 28 (UY) and GROUND.
	Is the voltage less than 10 volts? **Yes** REPAIR the circuit between JB231, pin 28 and battery. This circuit includes the front power distribution box, fuse 32. For additional information, refer to the wiring diagrams. **No** GO to AE2.
AE2: CHECK THE IGNITION 1 SUPPLY TO THE TCM	
	1 Turn the ignition switch to the **ON** position.
	2 Measure the voltage between JB231, pin 10 (WU) and GROUND.
	Is the voltage less than 10 volts? **Yes** REPAIR the circuit between JB231, pin 10 and battery. This circuit includes the front power distribution box, fuse 11, and the ignition relay. For additional information, refer to the wiring diagrams. **No** GO to AE3.
AE3: CHECK THE IGNITION 2 SUPPLY TO THE TCM	
	1 Turn the ignition switch to the **ON** position.
	2 Measure the voltage between JB231, pin 19 (WU) and GROUND.
	Is the voltage less than 10 volts? **Yes** REPAIR the circuit between JB231, pin 19 and battery. This circuit includes the front power distribution box, fuse 11, and the ignition relay. For additional information, refer to the wiring diagrams. **No** GO to AE4.
AE4: CHECK THE GROUND 1 TO THE TCM	
	1 Turn the ignition switch to the **OFF** position.
	2 Measure the resistance between JB231, pin 25 (B) and GROUND.

	Is the resistance greater than 5 ohms? **Yes** REPAIR the high resistance circuit. For additional information, refer to the wiring diagrams. **No** GO to AE5.
AE5: CHECK THE GROUND 2 TO THE TCM	
	1 Measure the resistance between JB231, pin 38 (B) and GROUND.
	Is the resistance greater than 5 ohms? **Yes** REPAIR the high resistance circuit. For additional information, refer to the wiring diagrams. **No** No fault found with power or ground supplies. Check for DTCs indicating a module fault.

PINPOINT TEST AF : ECM SUPPLY OR GROUND FAULT (VEHICLES WITH 2.0L PETROL ENGINE)	
TEST CONDITIONS	**DETAILS/RESULTS/ACTIONS**
AF1: CHECK THE B+ SUPPLY TO THE ECM	
	1 Turn the ignition switch to the **OFF** position.
	2 Disconnect the ECM connector, EN65.
	3 Measure the voltage between EN65, pin 21 (NR) and GROUND.
	Is the voltage less than 10 volts? **Yes** REPAIR the circuit between EN65, pin 21 and battery. This circuit includes the front power distribution box, fuse 36. For additional information, refer to the wiring diagrams. **No** GO to AF2.
AF2: CHECK THE CONTROL SUPPLY TO THE ECM	
	1 Turn the ignition switch to the **ON** position.
	2 Measure the voltage between EN65, pin 69 (B) and GROUND.
	Is the voltage less than 10 volts? **Yes** REPAIR the circuit between EN65, pin 69 and battery. This circuit includes the EMS control relay, pin 2. For additional information, refer to the wiring diagrams. **No** GO to AF3.
AF3: CHECK THE POWER GROUND (1) TO THE ECM	
	1 Turn the ignition switch to the **OFF** position.
	2 Measure the resistance between EN65, pin 19 (B) and GROUND.
	Is the resistance greater than 5 ohms? **Yes** REPAIR the high resistance circuit. For additional information, refer to the wiring diagrams. **No** GO to AF4.
AF4: CHECK THE POWER GROUND (2) TO THE ECM	
	1 Measure the resistance between EN65, pin 18 (B) and GROUND.
	Is the resistance greater than 5 ohms? **Yes** REPAIR the high resistance circuit. For additional information, refer to the wiring diagrams. **No** No fault found with power or ground supplies. Check for DTCs indicating a module fault.

PINPOINT TEST AG : ECM SUPPLY OR GROUND FAULT (VEHICLES WITH 2.5/3.0L PETROL ENGINE)	
TEST CONDITIONS	**DETAILS/RESULTS/ACTIONS**
AG1: CHECK THE B+ SUPPLY TO THE ECM	
	1 Turn the ignition switch to the **OFF** position.
	2 Disconnect the ECM connector, EN16.
	3 Measure the voltage between EN16, pin 22 (NR) and GROUND.
	Is the voltage less than 10 volts? **Yes** REPAIR the circuit between EN16, pin 22 and battery. This circuit includes the front power distribution box, fuse 36. For additional information, refer to the wiring diagrams. **No** GO to AG2.
AG2: CHECK THE CONTROL SUPPLY TO THE ECM	
	1 Turn the ignition switch to the **ON** position.
	2 Measure the voltage between EN16, pin 40 (B) and GROUND.
	Is the voltage less than 10 volts? **Yes** REPAIR the circuit between EN16, pin 40 and battery. This circuit includes the EMS control relay, pin 02. For additional information, refer to the wiring diagrams. **No** GO to AG3.
AG3: CHECK THE POWER GROUND (1) TO THE ECM	
	1 Turn the ignition switch to the **OFF** position.
	2 Measure the resistance between EN16, pin 04 (B) and GROUND.
	Is the resistance greater than 5 ohms? **Yes** REPAIR the high resistance circuit. For additional information, refer to the wiring diagrams. **No** GO to AG4.
AG4: CHECK THE POWER GROUND (2) TO THE ECM	
	1 Measure the resistance between EN16, pin 05 (B) and GROUND.

	Is the resistance greater than 5 ohms? **Yes** REPAIR the high resistance circuit. For additional information, refer to the wiring diagrams. **No** No fault found with power or ground supplies. Check for DTCs indicating a module fault.

PINPOINT TEST AH : ECM SUPPLY OR GROUND FAULT (VEHICLES WITH 2.0L DIESEL ENGINE)	
TEST CONDITIONS	**DETAILS/RESULTS/ACTIONS**
AH1: CHECK THE B+ SUPPLY TO THE ECM	
	1 Turn the ignition switch to the **OFF** position.
	2 Disconnect the ECM connector, DL01.
	3 Measure the voltage between DL01, pin 03 (WG) and GROUND.
	Is the voltage less than 10 volts? **Yes** REPAIR the circuit between DL01, pin 03 and battery. This circuit includes the front power distribution box, fuse 21, and the EMS control relay. For additional information, refer to the wiring diagrams. **No** GO to AH2.
AH2: CHECK THE CONTROL SUPPLY TO THE ECM	
	1 Turn the ignition switch to the **ON** position.
	2 Measure the voltage between DL01, pin 09 (B) and GROUND.
	Is the voltage less than 10 volts? **Yes** REPAIR the circuit between DL01, pin 09 and battery. This circuit includes the EMS control relay, pin 02. For additional information, refer to the wiring diagrams. **No** GO to AH3.
AH3: CHECK THE POWER GROUND (1) TO THE ECM	
	1 Turn the ignition switch to the **OFF** position.
	2 Measure the resistance between DL01, pin 01 (B) and GROUND.
	Is the resistance greater than 5 ohms? **Yes** REPAIR the high resistance circuit. For additional information, refer to the wiring diagrams. **No** GO to AH4.
AH4: CHECK THE POWER GROUND (2) TO THE ECM	
	1 Measure the resistance between DL01, pin 02 (B) and GROUND.
	Is the resistance greater than 5 ohms? **Yes** REPAIR the high resistance circuit. For additional information, refer to the wiring diagrams. **No** GO to AH5.
AH5: CHECK THE POWER GROUND (3) TO THE ECM	
	1 Measure the resistance between DL01, pin 28 (B) and GROUND.
	Is the resistance greater than 5 ohms? **Yes** REPAIR the high resistance circuit. For additional information, refer to the wiring diagrams. **No** GO to AH6.
AH6: CHECK THE POWER GROUND (4) TO THE ECM	
	1 Measure the resistance between DL01, pin 66 (B) and GROUND.
	Is the resistance greater than 5 ohms? **Yes** REPAIR the high resistance circuit. For additional information, refer to the wiring diagrams. **No** GO to AH7.
AH7: CHECK THE POWER GROUND (5) TO THE ECM	
	1 Measure the resistance between DL01, pin 88 (B) and GROUND.
	Is the resistance greater than 5 ohms? **Yes** REPAIR the high resistance circuit. For additional information, refer to the wiring diagrams. **No** No fault found with power or ground supplies. Check for DTCs indicating a module fault.

PINPOINT TEST AI : ICE SUPPLY OR GROUND FAULT	
TEST CONDITIONS	**DETAILS/RESULTS/ACTIONS**
AI1: CHECK THE B+ SUPPLY TO THE ICE	
	1 Turn the ignition switch to the **OFF** position.
	2 Disconnect the ICE connector, IP65.
	3 Measure the voltage between IP65, pin 11 (NW) and GROUND.
	Is the voltage less than 10 volts? **Yes** REPAIR the circuit between IP65, pin 11 and battery. This circuit includes the primary junction box, fuse 44. For additional information, refer to the wiring diagrams. **No** GO to AI2.
AI2: CHECK THE ACC SUPPLY TO THE ICE	
	1 Turn the ignition switch to the **ACC** position.
	2 Measure the voltage between IP65, pin 02 (YG) and GROUND.
	Is the voltage less than 10 volts? **Yes** REPAIR the circuit between IP65, pin 02 and battery. This circuit includes the primary junction box, fuse 43. For additional information, refer to the wiring diagrams. **No**

	GO to AI3.
AI3: CHECK THE GROUND TO THE ICE	
	1 Turn the ignition switch to the **OFF** position.
	2 Measure the resistance between IP65, pin 01 (B) and GROUND.
	Is the resistance greater than 5 ohms? **Yes** REPAIR the high resistance circuit. For additional information, refer to the wiring diagrams. **No** No fault found with power or ground supplies. Check for DTCs indicating a module fault.

PINPOINT TEST AJ : CD CHANGER SUPPLY OR GROUND FAULT	
TEST CONDITIONS	**DETAILS/RESULTS/ACTIONS**
AJ1: CHECK THE B+ SUPPLY TO THE CD CHANGER	
	1 Turn the ignition switch to the **OFF** position.
	2 Disconnect the CD changer connector, CA301.
	3 Measure the voltage between CA301, pin 02 (OY) and GROUND.
	Is the voltage less than 10 volts? **Yes** REPAIR the circuit between CA301, pin 02 and battery. This circuit includes the primary junction box, fuse 44. For additional information, refer to the wiring diagrams. **No** GO to AJ2.
AJ2: CHECK THE GROUND TO THE CD CHANGER	
	1 Measure the resistance between CA301, pin 01 (B) and GROUND.
	Is the resistance greater than 5 ohms? **Yes** REPAIR the high resistance circuit. For additional information, refer to the wiring diagrams. **No** No fault found with power or ground supplies. Check for DTCs indicating a module fault.

PINPOINT TEST AK : NAV MODULE SUPPLY OR GROUND FAULT	
TEST CONDITIONS	**DETAILS/RESULTS/ACTIONS**
AK1: CHECK THE B+ SUPPLY TO THE NAV MODULE	
	1 Turn the ignition switch to the **OFF** position.
	2 Disconnect the NAV module connector, NA07.
	3 Measure the voltage between NA07, pin 01 (OY) and GROUND.
	Is the voltage less than 10 volts? **Yes** REPAIR the circuit between NA07, pin 01 and battery. This circuit includes the primary junction box, fuse 44. For additional information, refer to the wiring diagrams. **No** GO to AK2.
AK2: CHECK THE ACC SUPPLY TO THE NAV MODULE	
	1 Turn the ignition switch to the **ACC** position.
	2 Measure the voltage between NA07, pin 11 (YG) and GROUND.
	Is the voltage less than 10 volts? **Yes** REPAIR the circuit between NA07, pin 11 and battery. This circuit includes the primary junction box, fuse 43. For additional information, refer to the wiring diagrams. **No** GO to AK3.
AK3: CHECK THE GROUND TO THE NAV MODULE	
	1 Turn the ignition switch to the **OFF** position.
	2 Measure the resistance between NA07, pin 02 (B) and GROUND.
	Is the resistance greater than 5 ohms? **Yes** REPAIR the high resistance circuit. For additional information, refer to the wiring diagrams. **No** No fault found with power or ground supplies. Check for DTCs indicating a module fault.

PINPOINT TEST AL : FFH MODULE SUPPLY OR GROUND FAULT	
TEST CONDITIONS	**DETAILS/RESULTS/ACTIONS**
AL1: CHECK THE B+ SUPPLY TO THE FFH MODULE	
	1 Turn the ignition switch to the **OFF** position.
	2 Disconnect the FFH module connector, JB232.
	3 Measure the voltage between JB232, pin 01 (GR) and GROUND.
	Is the voltage less than 10 volts? **Yes** REPAIR the circuit between JB232, pin 01 and battery. This circuit includes the front power distribution box, fuse 31. For additional information, refer to the wiring diagrams. **No** GO to AL2.
AL2: CHECK THE IGNITION SUPPLY TO THE FFH MODULE	
	1 Turn the ignition switch to the **ON** position.
	2 Measure the voltage between JB232, pin 04 (RW) and GROUND.
	Is the voltage less than 10 volts? **Yes** REPAIR the circuit between JB232, pin 04 and battery. This circuit includes the front power distribution box, fuse 12. For additional information, refer to the wiring diagrams. **No** GO to AL3.
AL3: CHECK THE GROUND TO THE FFH MODULE	

	1 Turn the ignition switch to the **OFF** position.
	2 Measure the resistance between JB232, pin 02 (B) and GROUND.
	Is the resistance greater than 5 ohms? **Yes** REPAIR the high resistance circuit. For additional information, refer to the wiring diagrams. **No** No fault found with power or ground supplies. Check for DTCs indicating a module fault.

PINPOINT TEST AM : PARK AID MODULE SUPPLY OR GROUND FAULT

TEST CONDITIONS	DETAILS/RESULTS/ACTIONS
AM1: CHECK THE IGNITION SUPPLY TO THE PARK AID MODULE	
	1 Turn the ignition switch to the **OFF** position.
	2 Disconnect the park aid module connector, CA418.
	3 Turn the ignition switch to the **ON** position.
	4 Measure the voltage between CA418, pin 01 (N) and GROUND.
	Is the voltage less than 10 volts? **Yes** REPAIR the circuit between CA418, pin 01 and battery. This circuit includes the primary junction box, fuse 33 and the ignition relay. For additional information, refer to the wiring diagrams. **No** GO to AM2.
AM2: CHECK THE GROUND TO THE PARK AID MODULE	
	1 Turn the ignition switch to the **OFF** position.
	2 Measure the resistance between CA418, pin 16 (B) and GROUND.
	Is the resistance greater than 5 ohms? **Yes** REPAIR the high resistance circuit. For additional information, refer to the wiring diagrams. **No** No fault found with power or ground supplies. Check for DTCs indicating a module fault.

PINPOINT TEST AN : RCM SUPPLY OR GROUND FAULT

TEST CONDITIONS	DETAILS/RESULTS/ACTIONS
AN1: CHECK THE IGNITION SUPPLY TO THE RCM	
	1 Turn the ignition switch to the **OFF** position.
	2 Disconnect the RCM connector, IP74.
	3 Turn the ignition switch to the **ON** position.
	4 Measure the voltage between IP74, pin 12 (G) and GROUND.
	Is the voltage less than 10 volts? **Yes** REPAIR the circuit between IP74, pin 12 and battery. This circuit includes the primary junction box, fuse 53 and the ignition relay. For additional information, refer to the wiring diagrams. **No** GO to AN2.
AN2: CHECK THE GROUND TO THE RCM	
	1 Turn the ignition switch to the **OFF** position.
	2 Measure the resistance between IP74, pin 16 (B) and GROUND.
	Is the resistance greater than 5 ohms? **Yes** REPAIR the high resistance circuit. For additional information, refer to the wiring diagrams. **No** No fault found with power or ground supplies. Check for DTCs indicating a module fault.

PINPOINT TEST AO : GEM SUPPLY FAULT

TEST CONDITIONS	DETAILS/RESULTS/ACTIONS
AO1: CHECK THE B+ SUPPLY TO THE GEM	
	1 Disconnect the GEM connector, JB172.
	2 Measure the voltage between JB172, pin 01 (OY) and GROUND.
	Is the voltage less than 10 volts? **Yes** REPAIR the circuit between JB172, pin 01 and battery. This circuit includes the primary junction box, fuse 22. For additional information, refer to the wiring diagrams. **No** No fault found with power supplies. Check for DTCs indicating a module fault.

PINPOINT TEST AP : RESTRAINTS CONTROL MODULE (RCM) ISO CIRCUIT MALFUNCTION

WARNING: To avoid accidental deployment and possible injury, the backup power supply must be depleted before repairing or replacing any airbag supplemental restraint system (SRS) components. To deplete the backup power supply energy, disconnect the battery ground cable and wait one minute. Failure to follow this instruction may result in personal injury.

TEST CONDITIONS	DETAILS/RESULTS/ACTIONS
AP1: CHECK THE RCM FOR DAMAGE	
	1 Inspect the RCM for damage.
	Does the RCM indicate signs of damage? **Yes** INSTALL a new RCM. REFER to: Restraints Control Module (RCM) (501-20B Supplemental Restraint System, Removal and Installation). CLEAR the DTC, test the system for normal operation. **No** GO to AP2.
AP2: CHECK K-LINE FOR SHORT CIRCUIT TO GROUND	
	1 Measure the resistance between diagnostic connector, pin 07 (W) and GROUND.

	Is the resistance less than 10,000 ohms? **Yes** REPAIR the short circuit. For additional information, refer to the wiring diagrams. CLEAR the DTC, test the system for normal operation. **No** GO to AP3.
AP3: CHECK K-LINE FOR SHORT CIRCUIT TO BATTERY	
	1 Measure the resistance between diagnostic connector, pins 07 (W) and pin 16 (OY).
	Is the resistance less than 10,000 ohms? **Yes** REPAIR the short circuit. For additional information, refer to the wiring diagrams. CLEAR the DTC, test the system for normal operation. **No** GO to AP4.
AP4: CHECK FOR OPEN CIRCUIT ON K-LINE BETWEEN DIAGNOSTIC CONNECTOR AND RCM	
	1 Turn the ignition switch to the **OFF** position.
	2 Disconnect the battery negative terminal.
	3 Disconnect the RCM connector, IP74.
	4 Measure the resistance between diagnostic connector, pin 07 (W) (K-line) and IP74, pin 11 (W).
	Is the resistance greater than 5 ohms? **Yes** REPAIR the high resistance circuit. For additional information, refer to the wiring diagrams. CLEAR the DTC, test the system for normal operation. **No** INSTALL a new RCM. REFER to: Restraints Control Module (RCM) (501-20B Supplemental Restraint System, Removal and Installation). CLEAR the DTC, test the system for normal operation.

PINPOINT TEST AQ : HEADLAMP LEVELLING MODULE (HID) ISO CIRCUIT MALFUNCTION

TEST CONDITIONS	DETAILS/RESULTS/ACTIONS
AQ1: CHECK HEADLAMP LEVELLING MODULE FOR DAMAGE	
	1 Inspect the HID module for damage.
	Does the HID module indicate signs of damage? **Yes** INSTALL a new HID module. REFER to: Headlamp Leveling Module (417-01 Exterior Lighting, Removal and Installation). CLEAR the DTC, test the system for normal operation. **No** GO to AQ2.
AQ2: CHECK K-LINE FOR SHORT CIRCUIT TO GROUND	
	1 Measure the resistance between diagnostic connector, pin 07 (W) and GROUND.
	Is the resistance less than 10,000 ohms? **Yes** REPAIR the short circuit. For additional information, refer to the wiring diagrams. CLEAR the DTC, test the system for normal operation. **No** GO to AQ3.
AQ3: CHECK K-LINE FOR SHORT CIRCUIT TO BATTERY	
	1 Measure the resistance between diagnostic connector, pins 07 (W) and pin 16 (OY).
	Is the resistance less than 10,000 ohms? **Yes** REPAIR the short circuit. For additional information, refer to the wiring diagrams. CLEAR the DTC, test the system for normal operation. **No** GO to AQ4.
AQ4: CHECK FOR OPEN CIRCUIT ON K-LINE BETWEEN DIAGNOSTIC CONNECTOR AND HID MODULE	
	1 Disconnect the HID module connector, IP130.
	2 Measure the resistance between diagnostic connector, pin 07 (W) and IP130, pin 05 (W).
	Is the resistance greater than 5 ohms? **Yes** REPAIR the high resistance circuit. For additional information, refer to the wiring diagrams. CLEAR the DTC, test the system for normal operation. **No** INSTALL a new HID module. REFER to: Headlamp Leveling Module (417-01 Exterior Lighting, Removal and Installation). CLEAR the DTC, test the system for normal operation.

PINPOINT TEST AR : ROOF CONSOLE ISO CIRCUIT MALFUNCTION

• NOTE: There are two levels of Roof Console. High-line, with moon roof, and/or reading lamps, plus VEMS and/or garage door opener (electrical connector, RC22). Low-line, with moon roof and/or reading lamps only (electrical connector, RC33).

TEST CONDITIONS	DETAILS/RESULTS/ACTIONS
AR1: CHECK ROOF CONSOLE MODULE FOR DAMAGE	
	1 Inspect the roof console module for damage.
	Does the roof console module indicate signs of damage? **Yes** INSTALL a new roof console module. CLEAR the DTC, test the system for normal operation. **No** GO to AR2.
AR2: CHECK K-LINE FOR SHORT CIRCUIT TO GROUND	
	1 Measure the resistance between diagnostic connector, pin 07 (W) and GROUND.
	Is the resistance less than 10,000 ohms? **Yes** REPAIR the short circuit. For additional information, refer to the wiring diagrams. CLEAR the DTC, test the system for normal operation. **No**

	GO to AR3.
AR3: CHECK K-LINE FOR SHORT CIRCUIT TO BATTERY	
	1 Measure the resistance between diagnostic connector, pin 07 (W) and pin 16 (OY).
	Is the resistance less than 10,000 ohms? **Yes** REPAIR the short circuit. For additional information, refer to the wiring diagrams. CLEAR the DTC, test the system for normal operation. **No** GO to AR4.
AR4: CHECK FOR OPEN CIRCUIT ON K-LINE BETWEEN THE DIAGNOSTIC CONNECTOR AND THE ROOF CONSOLE MODULE	
	1 Turn the ignition switch to the **OFF** position.
	2 Disconnect the battery negative terminal.
	3 Disconnect the roof console module connector (RC23, high-line, RC33, low-line).
	4 Measure the resistance between the diagnostic connector, pin 07 (W) and: Vehicles with low-line console - • RC23, pin 08 (W). Vehicles with high-line console - • RC33, pin 03 (W).
	Is the resistance greater than 5 ohms? **Yes** REPAIR the high resistance circuit. For additional information, refer to the wiring diagrams. CLEAR the DTC, test the system for normal operation. **No** INSTALL a new roof console module. CLEAR the DTC, test the system for normal operation.

PINPOINT TEST AS : REVERSE PARK AID ISO CIRCUIT MALFUNCTION	
TEST CONDITIONS	**DETAILS/RESULTS/ACTIONS**
AS1: CHECK THE REVERSE PARK AID MODULE FOR DAMAGE	
	1 Inspect the reverse park aid module for damage.
	Does the reverse park aid module indicate signs of damage? **Yes** INSTALL a new reverse park aid module. REFER to: Parking Aid Module - 4-Door (413-13 Parking Aid, Removal and Installation). CLEAR the DTC, test the system for normal operation. **No** GO to AS2.
AS2: CHECK K-LINE FOR SHORT CIRCUIT TO GROUND	
	1 Measure the resistance between diagnostic connector, pin 07 (W) and GROUND.
	Is the resistance less than 10,000 ohms? **Yes** REPAIR the short circuit. For additional information, refer to the wiring diagrams. CLEAR the DTC, test the system for normal operation. **No** GO to AS3.
AS3: CHECK K-LINE FOR SHORT CIRCUIT TO BATTERY	
	1 Measure the resistance between diagnostic connector, pin 07 (W) and pin 16 (OY).
	Is the resistance less than 10,000 ohms? **Yes** REPAIR the short circuit. For additional information, refer to the wiring diagrams. CLEAR the DTC, test the system for normal operation. **No** GO to AS4.
AS4: CHECK FOR OPEN CIRCUIT ON K-LINE BETWEEN THE DIAGNOSTIC CONNECTOR AND THE REVERSE PARK AID MODULE	
	1 Turn the ignition switch to the **OFF** position.
	2 Disconnect the battery negative terminal.
	3 Disconnect the reverse park aid module connector, RB07.
	4 Measure the resistance between diagnostic connector, pin 07 (W) and RB07, pin 05 (W).
	Is the resistance greater than 5 ohms? **Yes** REPAIR the high resistance circuit. For additional information, refer to the wiring diagrams. CLEAR the DTC, test the system for normal operation. **No** INSTALL a new reverse park aid module. REFER to: Parking Aid Module - 4-Door (413-13 Parking Aid, Removal and Installation). CLEAR the DTC, test the system for normal operation.

PINPOINT TEST AT : ECM ISO CIRCUIT MALFUNCTION	
• NOTE: These pinpoint tests apply only to OBD2 diagnostics. The ECM does most of it's diagnostics via CAN.	
TEST CONDITIONS	**DETAILS/RESULTS/ACTIONS**
AT1: CHECK ECM FOR DAMAGE	
	1 Inspect the ECM for damage.
	Does the ECM indicate signs of damage? **Yes** Please check part is not on any form of prior authorization before replacement. **No** GO to AT2.
AT2: CHECK K-LINE FOR SHORT CIRCUIT TO GROUND	
	1 Measure the resistance between the diagnostic connector, pin 07 (W) and GROUND.

	Is the resistance less than 10,000 ohms? **Yes** REPAIR the short circuit. For additional information, refer to the wiring diagrams. CLEAR the DTC, test the system for normal operation. **No** GO to AT3.
AT3: CHECK K-LINE FOR SHORT CIRCUIT TO BATTERY	
	1 Measure the resistance between the diagnostic connector, pins 07 (W) and 16 (OY).
	Is the resistance less than 10,000 ohms? **Yes** REPAIR the short circuit. For additional information, refer to the wiring diagrams. CLEAR the DTC, test the system for normal operation. **No** GO to AT4.
AT4: CHECK FOR OPEN CIRCUIT ON K-LINE BETWEEN THE DIAGNOSTIC CONNECTOR AND THE ECM	
• NOTE: The diesel ECM is not part of the ISO network.	
	1 Turn the ignition switch to the **OFF** position.
	2 Disconnect the battery negative terminal. Vehicles with 2.5 and 3.0L engine - ● Disconnect the ECM connector, EN16. ● Measure the resistance between the diagnostic connector, pin 07 (W) and EN16, pin 105 (W). Vehicles with 2.0L petrol engine - ● Disconnect the ECM connector, EN65. ● Measure the resistance between the diagnostic connector, pin 07 (W) and EN65, pin 39 (W).
	Is the resistance greater than 5 ohms? **Yes** REPAIR the high resistance circuit. For additional information, refer to the wiring diagrams. CLEAR the DTC, test the system for normal operation. **No** Please check part is not on any form of prior authorization before replacement.

PINPOINT TEST AU : FUEL FIRED HEATER (FFH) MODULE ISO CIRCUIT MALFUNCTION

TEST CONDITIONS	DETAILS/RESULTS/ACTIONS
AU1: CHECK THE FFH MODULE FOR DAMAGE	
	1 Inspect the FFH module for damage.
	Does the FFH module indicate signs of damage? **Yes** Please check part is not on any form of prior authorization before replacement. **No** GO to AU2.
AU2: CHECK K-LINE FOR SHORT CIRCUIT TO GROUND	
	1 Measure the resistance between the diagnostic connector, pin 07 (W) and GROUND.
	Is the resistance less than 10,000 ohms? **Yes** REPAIR the short circuit. For additional information, refer to the wiring diagrams. CLEAR the DTC, test the system for normal operation. **No** GO to AU3.
AU3: CHECK K-LINE FOR SHORT CIRCUIT TO BATTERY	
	1 Measure the resistance between the diagnostic connector, pins 07 (W) and 16 (OY).
	Is the resistance less than 10,000 ohms? **Yes** REPAIR the short circuit. For additional information, refer to the wiring diagrams. CLEAR the DTC, test the system for normal operation. **No** GO to AU4.
AU4: CHECK FOR OPEN CIRCUIT ON K-LINE BETWEEN THE DIAGNOSTIC CONNECTOR AND THE FFH MODULE	
	1 Turn the ignition switch to the **OFF** position.
	2 Disconnect the battery negative terminal.
	3 Disconnect the FFH module connector, JB232.
	4 Measure the resistance between the diagnostic connector, pin 07 (W) and JB232, pin 03 (W).
	Is the resistance greater than 5 ohms? **Yes** REPAIR the high resistance circuit. For additional information, refer to the wiring diagrams. CLEAR the DTC, test the system for normal operation. **No** Please check part is not on any form of prior authorization before replacement.

PINPOINT TEST AV : AMPLIFIER SUPPLY OR GROUND FAULT

TEST CONDITIONS	DETAILS/RESULTS/ACTIONS
AV1: CHECK THE B+ SUPPLY TO THE AMPLIFIER	
	1 Turn the ignition switch to the **OFF** position.
	2 Disconnect the amplifier connector, CA425.
	3 Measure the voltage between CA425, pin 03 (NR) and GROUND.
	4 Measure the voltage between CA425, pin 09 (NR) and GROUND.
	Is either voltage less than 10 volts? **Yes** REPAIR the circuit between CA425, pins 03/09 and battery. This circuit includes the primary junction box, fuse 20. For additional information, refer to the wiring diagrams. **No** GO to AV2.

AV2: CHECK THE GROUND TO THE AMPLIFIER	
	1 Turn the ignition switch to the **OFF** position.
	2 Measure the resistance between CA425, pin 02 (B) and GROUND.
	3 Measure the resistance between CA425, pin 08 (B) and GROUND.
	Is either resistance greater than 5 ohms? **Yes** REPAIR the high resistance circuit. For additional information, refer to the wiring diagrams. **No** No fault found with power or ground supplies. Check for DTCs indicating a module fault.

PINPOINT TEST AW : P0860: CAN ECM / JGM NETWORK MALFUNCTION	
TEST CONDITIONS	**DETAILS/RESULTS/ACTIONS**
AW1: CHECK THE JGM FOR DAMAGE	
	1 Inspect the JGM.
	Does the JGM indicate any signs of damage? **Yes** Please check part is not on any form of prior authorization before replacement. **No** GO to AW2.
AW2: CHECK CAN + FOR SHORT CIRCUIT TO GROUND	
	1 Measure the resistance between the diagnostic connector, pin 06, (Y) and GROUND.
	Is the resistance less than 10,000 ohms? **Yes** REPAIR the short circuit. For additional information, refer to the wiring diagrams. CLEAR the DTC, test the system for normal operation. **No** GO to AW3.
AW3: CHECK CAN + FOR SHORT CIRCUIT TO BATTERY	
	1 Measure the resistance between the diagnostic connector, pin 06, (Y) and pin 16 (OY).
	Is the resistance less than 10,000 ohms? **Yes** REPAIR the short circuit. For additional information, refer to the wiring diagrams. CLEAR the DTC, test the system for normal operation. **No** GO to AW4.
AW4: CHECK CAN - FOR SHORT CIRCUIT TO GROUND	
	1 Measure the resistance between the diagnostic connector, pin 14 (G) and GROUND.
	Is the resistance less than 10,000 ohms? **Yes** REPAIR the short circuit. For additional information, refer to the wiring diagrams. CLEAR the DTC, test the system for normal operation. **No** GO to AW5.
AW5: CHECK CAN - FOR SHORT CIRCUIT TO BATTERY	
	1 Measure the resistance between the diagnostic connector, pins 14 (G) and 16 (OY).
	Is the resistance less than 10,000 ohms? **Yes** REPAIR the short circuit. For additional information, refer to the wiring diagrams. CLEAR the DTC, test the system for normal operation. **No** GO to AW6.
AW6: CHECK FOR SHORT CIRCUIT BETWEEN CAN + AND CAN -	
	1 Measure the resistance between the diagnostic connector, pins 06 (Y) and 14 (G).
	Is the resistance less than 10,000 ohms? **Yes** REPAIR the short circuit. For additional information, refer to the wiring diagrams. CLEAR the DTC, test the system for normal operation. **No** GO to AW7.
AW7: CHECK FOR OPEN CIRCUIT ON CAN + BETWEEN THE DIAGNOSTIC CONNECTOR AND THE JGM	
	1 Disconnect the battery negative terminal. • Disconnect the JGM connector, IP14. • Measure the resistance between IP22 pin 06 (Y) and IP14, pin 11 (Y).
	Is the resistance greater than 5 ohms? **Yes** REPAIR the high resistance circuit. For additional information, refer to the wiring diagrams. CLEAR the DTC, test the system for normal operation. **No** GO to AW8.
AW8: CHECK FOR OPEN CIRCUIT ON CAN - BETWEEN THE DIAGNOSTIC CONNECTOR AND THE JGM	
	1 To test: • Measure the resistance between the diagnostic connector, pin 14 (G) and IP14, pin 12 (G).
	Is the resistance greater than 5 ohms? **Yes** REPAIR the high resistance circuit. For additional information, refer to the wiring diagrams. CLEAR the DTC, test the system for normal operation. **No** GO to AW9.
AW9: CHECK FOR CORRECT BUS TERMINATION	
	1 Reconnect the ECM connector.
	2 Measure the resistance between the diagnostic connector, pins 06 (Y) and 14 (G).

	Is the resistance between 50 and 70 ohms? **Yes** Please check part is not on any form of prior authorization before replacement. **No** GO to AW10.
AW10: CHECK CONTINUITY OF THE CAN + CIRCUIT	
	1 To test: Vehicles with 2.5 and 3.0L engine - ● Disconnect the ECM connector, EN16, and the IC connector, IP10. ● Measure the resistance between EN16, pin 124 (Y) and IP10, pin 17 (Y). Vehicles with 2.0L petrol engine - ● Disconnect the ECM connector, EN65, and the IC connector, IP10. ● Measure the resistance between EN65, pin 89 (Y) and IP10, pin 17 (Y). Vehicles with 2.0L and 2.2L diesel engine - ● Disconnect the ECM connector, DL01, and the IC connector, IP10. ● Measure the resistance between DL01, pin 54 (Y) and IP10, pin 17 (Y).
	Is the resistance greater than 5 ohms? **Yes** REPAIR the high resistance circuit. For additional information, refer to the wiring diagrams. CLEAR the DTC, test the system for normal operation. **No** GO to AW11.
AW11: CHECK CONTINUITY OF THE CAN - CIRCUIT	
	1 Measure the resistance between: Vehicles with 2.5 and 3.0L engine - ● EN16, pin 123 (G) and IP10, pin 18 (G). Vehicles with 2.0L petrol engine - ● EN65, pin 88 (G) and IP10, pin 18 (G). Vehicles with 2.0L and 2.2L diesel engine - ● DL01, pin 73 (G) and IP10, pin 18 (G).
	Is the resistance greater than 5 ohms? **Yes** REPAIR the high resistance circuit. For additional information, refer to the wiring diagrams. CLEAR the DTC, test the system for normal operation. **No** GO to AW12.
AW12: CHECK FOR LOSS OF TERMINATION WITHIN THE ECM	
	1 Measure the resistance between: Vehicles with 2.5 and 3.0L engine - ● pins 123 and 124 of the ECM. Vehicles with 2.0L petrol engine - ● pins 88 and 89 of the ECM. Vehicles with 2.0L and 2.2L diesel engine - ● pins 54 and 73 of the ECM.
	Is the resistance between 110 and 140 ohms? **Yes** GO to AW13. **No** Please check part is not on any form of prior authorization before replacement.
AW13: CHECK FOR LOSS OF TERMINATION WITHIN THE IC	
	1 Measure the resistance between pins 17 and 18 of the IC.
	Is the resistance between 110 and 140 ohms? **Yes** Possible intermittent fault. Recheck DTCs. **No** INSTALL a new instrument cluster. REFER to: Instrument Cluster (413-01 Instrument Cluster, Removal and Installation). CLEAR the DTC, test the system for normal operation.

PINPOINT TEST AX : JGM SUPPLY OR GROUND FAULT

TEST CONDITIONS	DETAILS/RESULTS/ACTIONS
AX1: CHECK THE IGNITION SUPPLY TO THE JGM	
	1 Turn the ignition switch to the **OFF** position.
	2 Disconnect the JGM connector, IP14.
	3 Turn the ignition switch to the **ON** position.
	4 Measure the voltage between IP14, pin 1 (WR) and GROUND.
	Is the voltage less than 10 volts? **Yes** REPAIR the circuit between IP14, pin 1 and battery. This circuit includes the primary junction box, fuse 50 and the ignition relay. For additional information, refer to the wiring diagrams.

	No GO to AX2.
AX2: CHECK THE GROUND TO THE JGM	
	1 Turn the ignition switch to the **OFF** position.
	2 Measure the resistance between IP14, pin 2 (B) and GROUND.
	Is the resistance greater than 5 ohms? **Yes** REPAIR the high resistance circuit. For additional information, refer to the wiring diagrams. **No** No fault found with power or ground supplies. Check for DTCs indicating a module fault.

Module Configuration - Module Configuration

Diagnosis and Testing

Principles of Operation

• NOTE: Newly released modules will require configuration after being installed on the vehicle. All configurable modules will be packaged in a kit which contains a warning label and a multi-language sheet re-emphasizing the requirements to configure replacement modules.

• NOTE: Newly released modules must be configured using the Jaguar approved diagnostic system.

Module Configuration

There are two types of configuration data. The first type is 'market configuration' data, this data is required so that the module can interact with the vehicle correctly. By using the Jaguar approved diagnostic system this data will be retrieved in the following ways:

- indirectly from a mirrored image of the old module's data stored in the engine control module's (ECM) vehicle identification data (VID) block
- indirectly from information stored in the Jaguar approved diagnostic system vehicle configuration and test system (VCATS)

Modules on the vehicle that require configuration when installing a replacement module are:

- instrument cluster (IC)
- engine control module (ECM)
- high intensity discharge (HID) headlights
- intrusion sensor module (ISM)
- phone module
- transmission control module (TCM)
- voice module (VACM)
- generic electronic module (GEM)
- electronic automatic temperature control (EATC) module
- airbag control module
- audio unit

Inhale / exhale procedure

For all modules, except diesel engine control module:

- Install the new module
- Upload the information from the VID block using the Jaguar approved diagnostic system
- Download the information to the VID block using the Jaguar approved diagnostic system

For diesel engine control module:

- Upload the information from the VID block using the Jaguar approved diagnostic system
- Install the new module
- Download the information to the VID block using the Jaguar approved diagnostic system

CAUTION: If the diesel engine control module is removed before 'inhaling' it's information, adaptations may be lost.

• NOTE: The Jaguar approved diagnostic system will not retain the stored configuration information for longer than 24 hours.

For additional information on the IC,
REFER to: Instrument Cluster (413-01 Instrument Cluster, Description and Operation).
For additional information on the ECM,
REFER to: Electronic Engine Controls (303-14A Electronic Engine Controls - 2.0L NA V6 - AJV6/2.5L NA V6 - AJV6/3.0L NA V6 - AJ27, Description and Operation).
For additional information on the HID,
REFER to: Exterior Lighting (417-01 Exterior Lighting, Description and Operation).
For additional information on the ISM,
REFER to: Anti-Theft - Active (419-01A Anti-Theft - Active, Description and Operation).
For additional information on the phone module,
REFER to: Cellular Phone (419-08 Cellular Phone, Description and Operation).
For additional information on the TCM,
REFER to: Transmission Description (307-01 Automatic Transmission/Transaxle, Description and Operation).
For additional information on the voice module,
REFER to: Cellular Phone (419-08 Cellular Phone, Description and Operation).
For additional information on the GEM,
REFER to: Module Controlled Functions (419-10 Multifunction Electronic Modules, Description and Operation).
For additional information on the EATC,
REFER to: Climate Control System (412-00 Climate Control System - General Information, Description and Operation).
For additional information on the airbag control module,
REFER to: Air Bag Supplemental Restraint System (SRS) (501-20B Supplemental Restraint System, Description and Operation).

Customer Driven Preferences

The second type of configuration data is customer preference driven. These are items that the customer may or may not want to have enabled. Typically, customer preference items can be toggled on or off by the use of the Jaguar approved diagnostic system.

To carry out the customer configuration process, select the option the customer wants enabled or disabled from the configuration menu.

The current status of each option will be displayed, and the options can be enabled or disabled from this menu by following the instructions on-screen.

Module Configuration - Module Configuration

General Procedures

1. The complexity of the electronics involved with module configuration, of which the GEM and instrument cluster are a part, and the multiplexed communication network which are connected to them preclude the use of workshop general electrical test equipment. Therefore, reference should be made to the Jaguar Approved Diagnostic System User Guide for detailed instructions on module configuration.

Published: 11-May-2011

Wiring Harnesses - Wiring Harness

Description and Operation

Introduction

CAUTION: Do **not** use any other heat shrink sleeve other than the approved glue lined heat shrink sleeve mentioned in the repair procedure.

The purpose of this document is to promote quick and efficient minor repair to harness connectors or cables using approved methods and the wiring harness repair kit. Repairs may only be made to cables and connectors which have been mechanically, **not electrically** damaged. It also applies where the whole extent of the damage can be clearly identified and rectified.

Care and neatness are essential requirements in making a perfect repair.

Caution:

At the time of this first issue of the Harness Repair Guide, do not approve repairs to any of the following circuits:

- Any media orientated system transport network harnesses.
- Supplement restraint system (SRS) firing circuits (Air bags).
- Link lead assembles, which are unique to safety critical circuits such as anti-lock brake system (ABS) and thermocouple circuits. An example of this is the ABS wheel speed sensors with moulded connectors.
- 4. Screened cables, leads and wiring harness(s).

If any harness(s) with defective electrical connector terminals or wires from the above circuits are a concern, new components must be installed.

Repair Kit

CAUTION: Where the repair procedure indicates that a glue lined heat shrink sleeve should be applied, apply sufficient heat to the glue lined heat shrink to melt the glue in order to provide a water tight seal. Do **not** over heat the glue lined heat shrink sleeve so that the wiring harness insulation becomes damaged.

The wiring harness repair kit has been produced which comprises:

- Pre-terminated wiring harness(s) of different sizes and types
- Three sizes of butt splice connectors
- A selection of colored cable identification sleeves
- Two sizes of glue lined heat shrink sleeves
- Crimping pliers
- A wire cutter and insulation stripper
- An electrical connector terminal extraction handle and tips

A suitable heat source, for shrinking heat shrink sleeves will be required.

The pre-insulated diamond grip range of electrical connector terminals and in-line, butt splice connectors contained within the wiring harness repair kit are the **only** acceptable product for the repairs of wiring harnesses. The butt connectors not only grip the wire but also the insulation, making a very secure joint.

If an electrical connector terminal is not included in the wiring harness repair kit then approval for the repair is **NOT** given and in these circumstances a new wiring harness must be installed.

Pre-Terminated Wiring Harness(s) and Butt Splice Connectors

All pre-terminated wiring harness(s) and butt splice connectors in the wiring harness repair kit are contained in bags which can be resealed after use. Each bag is marked with the part number of the items stored within the bag. Each storage compartment in the wiring harness repair kit is identified with the corresponding part number. Make sure that pre-terminated wiring harness(s) and connectors are not mixed up it is advisable to only open one bag at a time and to reseal the bag securely before opening another bag. Also, replace the bag in its mating part number compartment within the case.

The pre-terminated wiring harness(s) are supplied with the insulation in one of three colors, red, blue or yellow. The colors do not apply to any particular circuit but to the harness wire size. See the Relationship Table in the Repair Method section.

Butt splice connectors are also supplied with red, blue or yellow coverings, which must be matched to the pre-terminated wiring harness insulation color.

Pre-Terminated Wiring Harness(s)

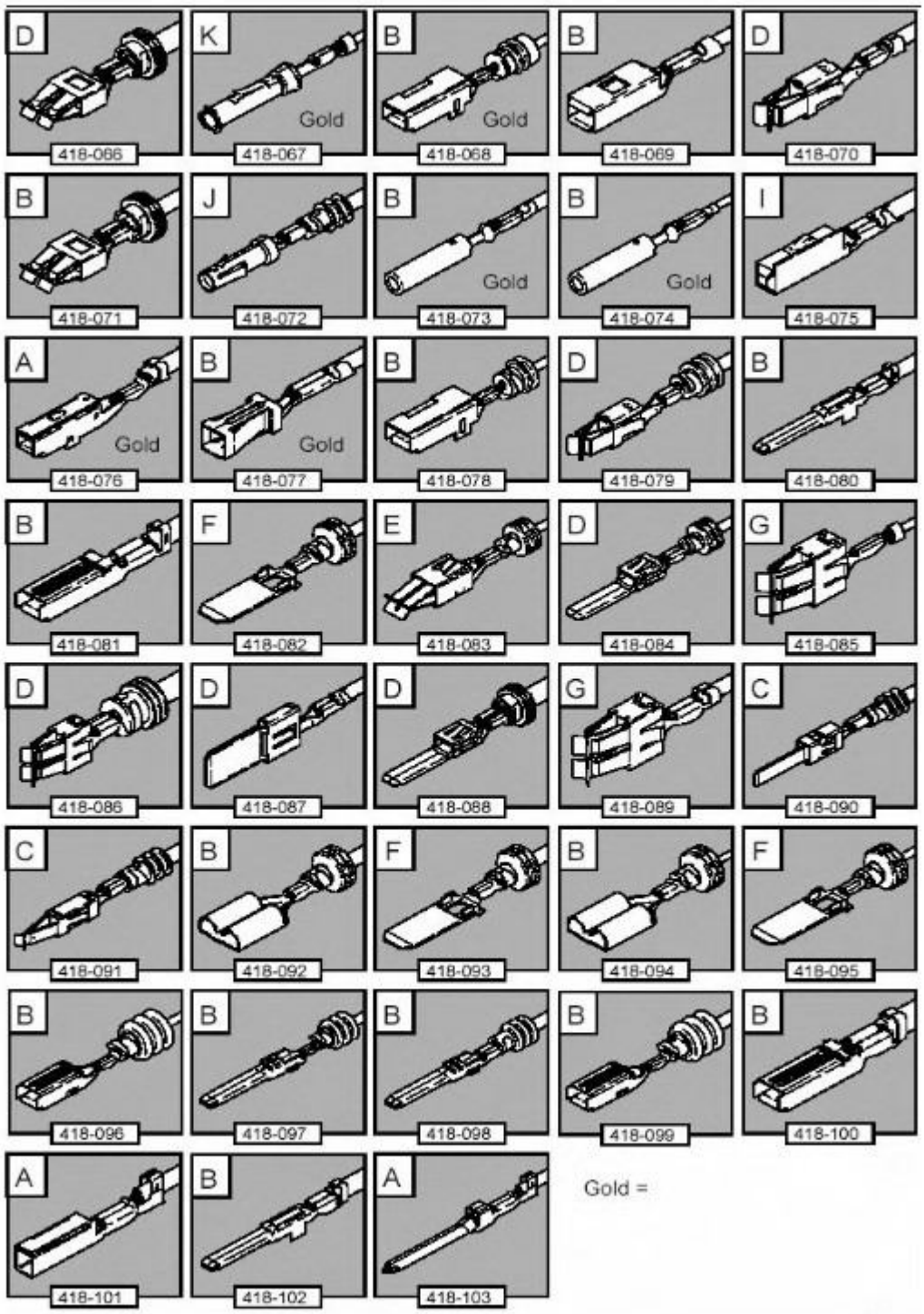

E130741

The illustration shows:

- The pre-terminated wiring harness(s) which are included in the wiring harness repair kit
- The part number of the pre-terminated wiring harness
- The letter showing the extractor tip which must be used to remove this type of electrical connector terminal
- Those electrical connector terminals which are gold

Some of the pre-terminated wiring harness(s) have seals installed to the insulation for sealed connector applications. It is essential for prevention of moisture ingress that a sealed pre-terminated wiring harness must be used where a sealed terminal was removed.

CAUTION: Where the repair procedure indicates that a glue lined heat shrink sleeve should be applied, apply sufficient heat to the glue lined heat shrink to melt the glue in order to provide a water tight seal. Do **not** over heat the glue lined heat shrink sleeve so that the wiring harness insulation becomes damaged.

Two sizes of heat shrink sleeving are supplied in the wiring harness repair kit. Each heat shrink sleeve contains a sealant glue. These must be used when connecting wiring harness(s) or electrical connector terminal(s) at all times. The smaller diameter heat shrink sleeve is to be used with the red and blue butt splice connectors and the larger diameter sleeve with the yellow butt splice connectors.

For ease and speed, some of the pre-terminated wiring harness(s) may already have the insulation partly stripped at the splice end. If the repair requires insulation to be stripped from the cable, refer to the Relationship Table for the correct length of insulation to be stripped.

The Pre-Terminated Wiring Harness(s) illustration shows the electrical connector terminal type, the part number of the pre-terminated wiring harness and the letter of the extractor tip which must be used to extract the electrical connector terminal from the connector housing. Additionally, those electrical connector terminal(s) which are gold are identified, all others are therefore, tinned and not gold.

Wiring Harness Cable Identification Sleeves

A selection of colored sleeves are contained in the wiring harness repair kit for maintaining the wiring harness cable identification on the pre-terminated wiring harness. Place the correct colored sleeve(s) over the pre-terminated wiring harness insulation as near to the electrical connector as possible with the main wiring harness cable color nearest to the electrical connector.

For example, if the original wiring harness cable color is pink with a black trace put the pink wiring harness cable identification sleeve on the pre-terminated wiring harness first followed by a black sleeve, and slide both along the wiring harness cable to the electrical connector terminal.

Extraction Handle and Tips

The extraction handle, in conjunction with the correct tip, is used to remove a terminal from an electrical connector. Each tip contained in the wiring harness repair kit is marked with an identification letter, A to K inclusive. Each tip has been specially designed to extract a particular type of electrical connector terminal. The use of any other tool is **not** recommended and is liable to cause damage to the electrical connector. The tip is fastened to the handle by a screw which holds the tip firmly yet allows it to be easily replaced.

Extraction Handle and Tips

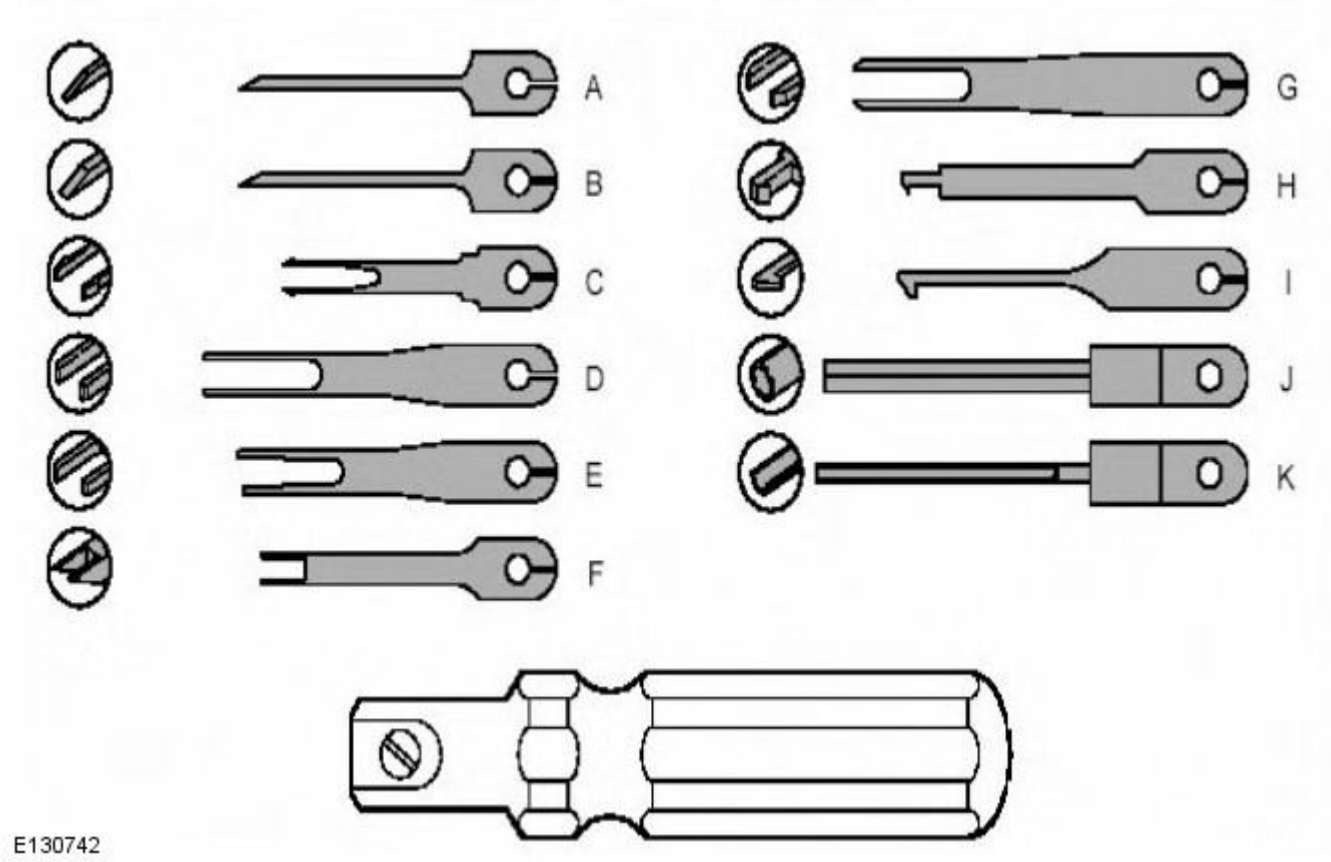

Insulation Stripper

The moving jaw has an adjuster wheel which has a series of holes in it. Turning the wheel and placing the cable in the matching size hole will automatically adjust the jaw to the correct pressure. Note that some wiring harness(s) may have a harder insulation and slight adjustment of the wheel may be needed to make a clean strip but exercise care not to damage the wire.

Insulation Stripper

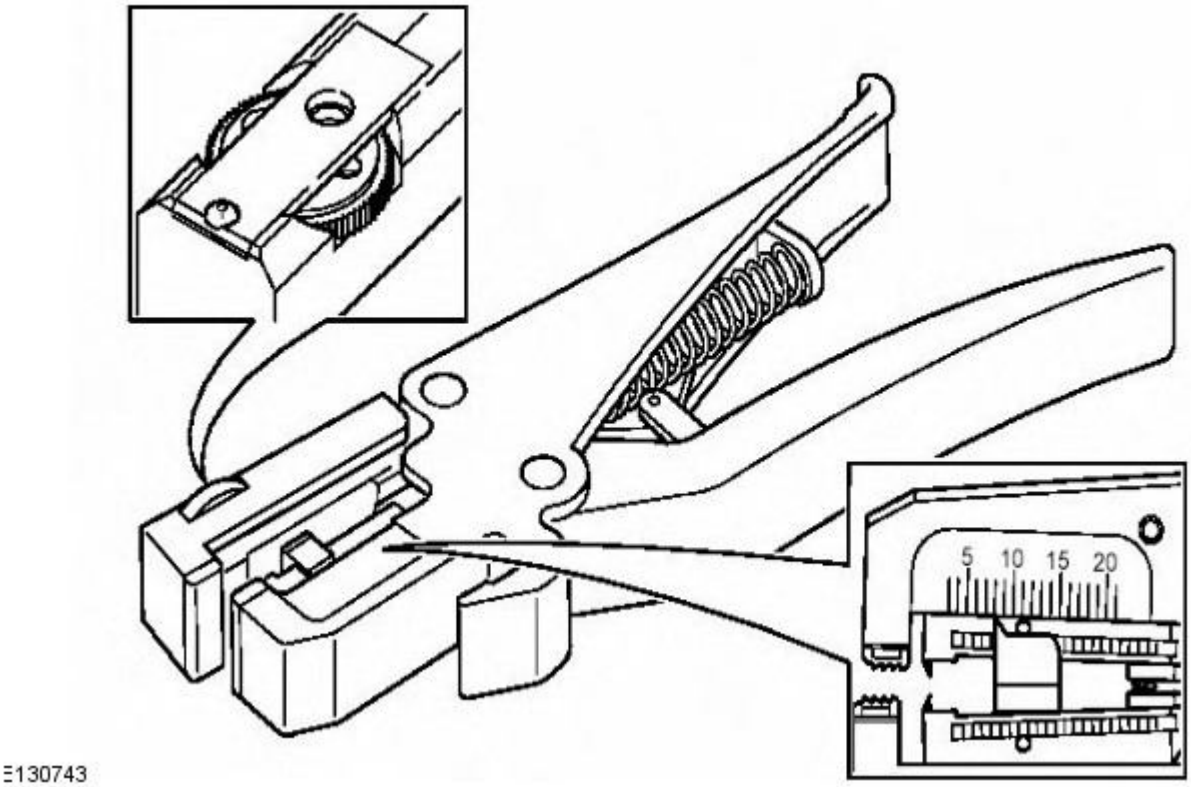

By pressing the outer edges of the wiring harness cable length stop together the adjuster can be slid up or down the jaw. This decreases or increases the length by which the wiring harness cable insulation will be stripped from the pre-terminated wiring harness or wiring harness wire. The adjuster has a position indicator to align with a graduated scale and this sets the correct length in millimetres, of insulation to be stripped. The amount of insulation to be stripped is shown in the Relationship Table.

The illustration shows the insulation stripper tool and a wiring harness correctly gripped in the jaws. A wire cutter is provided on the outer side of the fixed jaw.

Cable Correctly Gripped in Stripper Blades

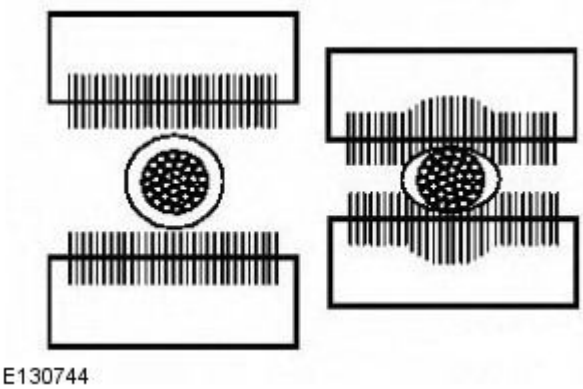

Crimping Pliers

Crimping Pliers

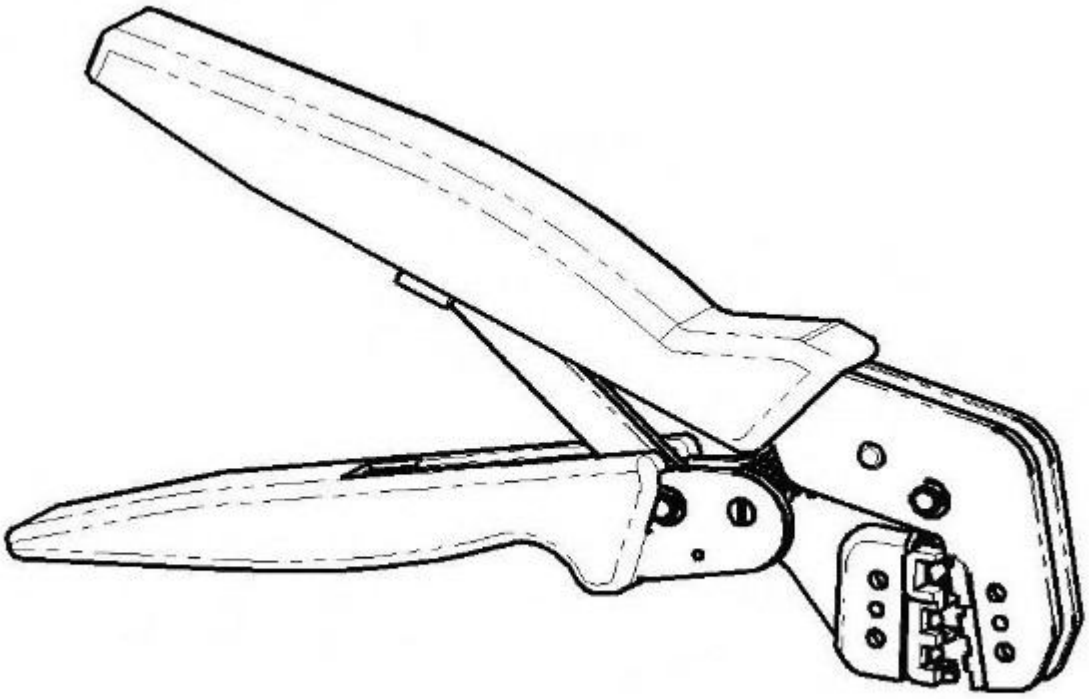

E130745

The crimping pliers have a moving jaw and a stationary jaw, with three different sized crimping enclosures. Each of the enclosures is identified by a red, blue or yellow coloured dot which corresponds to the three colours of the pre-terminated wiring harness(s) and butt splice connector colors.

List of Parts

Description	Part Number	Quantity
Wiring Harness Repair Kit	418-S065	1
Pre-Terminated Wiring Harness(s)	418-066 to 418-103 inclusive	10 each
Glue Lined Heat Shrink Pack – small diameter	418-104	25 per pack
Glue Lined Heat Shrink Pack – larger diameter	418-105	10 per pack
Case Assembly Comprising – carry case, lid, inner lid, base, insert, trays foam spacers	418-106	1
Butt Splice Connector – Red	418-107	50 per pack
Butt Splice Connector – Blue	418-108	50 per pack
Butt Splice Connector – Yellow	418-109	20 per pack
Extraction Tool Handle	418-110	1
Extraction Tip Pack consists of 2 spare screws plus	418-S111	1
Tip A	418-118	1
Tip B	418-119	1
Tip C	418-120	1
Tip D	418-121	1
Tip E	418-122	1
Tip F	418-123	1
Tip G	418-124	1
Tip H	418-125	1
Tip I	418-126	1
Tip J	418-127	1
Tip K	418-128	1
Sleeve Identification Pack – for Red insulation	418-112	500
Sleeve Identification Pack – for Blue insulation	418-113	500
Sleeve Identification Pack – for Yellow insulation	418-114	500
Instruction Manual	JTP 593	1
Crimping Pliers	YRW500010	1
Wire Stripping Tool	418-117	1

Items can be ordered from:

SPX United Kingdom Limited

Ironstone Way

Brixworth

Northants

NN6 9UD

United Kingdom

Telephone: +44 (0) 1327 704461

Fax: +44 (0) 1327 706632

Repair Methods

CAUTION: **Several different types and sizes of terminal may be found in a single electrical connector housing.**

It is necessary to identify:

- The conductor (wire) size of the affected wiring harness
- The electrical connector range from which the damaged wiring harness is to be removed
- The terminal type

Use of the approved diagnostic tool will greatly assist in the quick identification of electrical connectors and faulty pin terminal(s).

Reference can also be made to the vehicle Electrical Guides, held by Dealers, to identify wiring harness(s) and electrical connector(s).

By using the Relationship Table, the wiring harness conductor (wire) size can be related to a suitable pre-terminated wiring harness by the color of the insulation. Also, the correct length of insulation to be stripped from the wiring harness lead is identified.

Relationship Table

CABLE RANGE	SPLICE	STRIP LENGTH
0.35 mm^2 to 1.50 mm^2	RED	6.00 to 7.00 mm
1.00 mm^2 to 2.50 mm^2	BLUE	6.00 to 7.00 mm
4.00 mm^2 to 6.00 mm^2	YELLOW	9.00 to 9.50 mm

Electrical Connector Terminal Extraction

It must be noted that some electrical connector(s) have anti-backout devices which prevent the terminals from being removed from the electrical connector. Some examples of these are shown in following illustrations. The anti-backout device must be released before attempting to remove the terminal from the electrical connector. Some anti-backout devices require a special tip to release the device and these have been included in the kit. Most can be released by carefully using a suitable small screwdriver.

Various types of electrical connector have seals installed internally or externally to prevent moisture ingress. These normally do not have to be removed but make sure that they are installed when the electrical connectors are connected.

The illustrations show examples of each tip used on different types of electrical connector(s). There are a large number of different types of electrical connector used on vehicles therefore only one example using each tip is shown. Technicians experience and judgement will dictate which type of tip should be used for those electrical connector(s) which are not shown. Care should be exercised to avoid further damage when removing the terminals from the electrical connector.

• NOTE: **Examples of the extraction tips and anti-backout tips.**

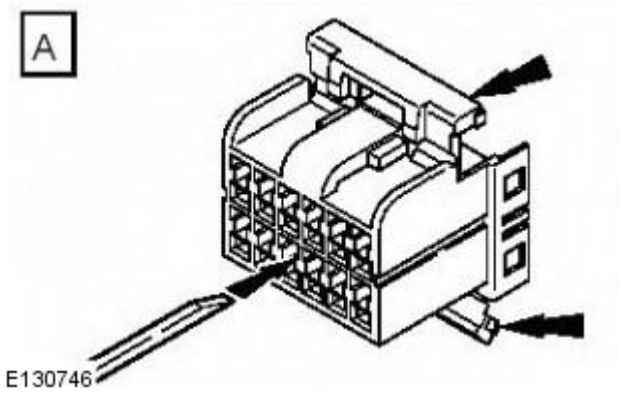

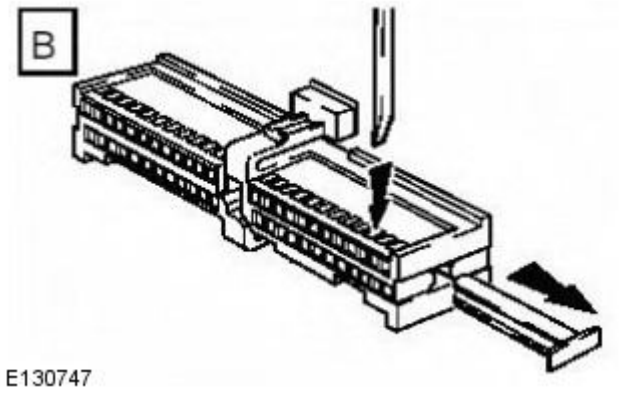

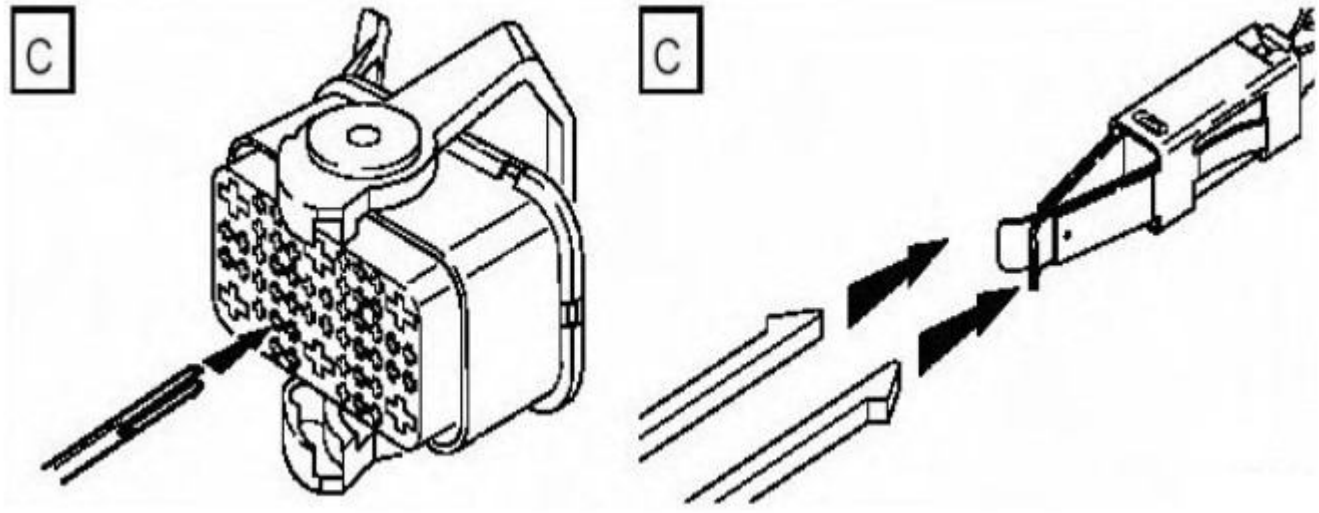

E130748

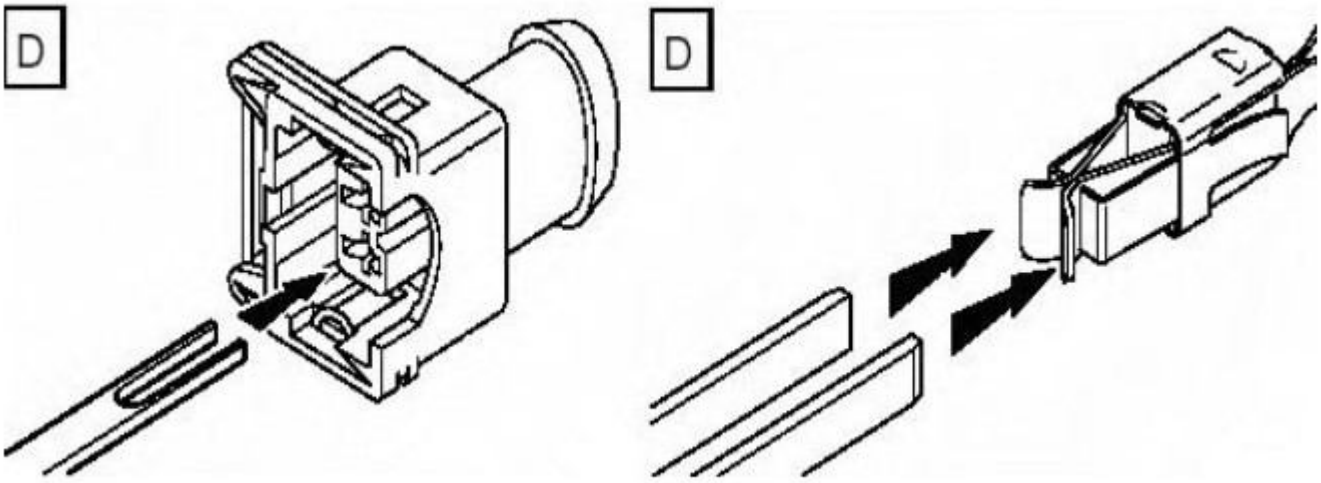

E130749

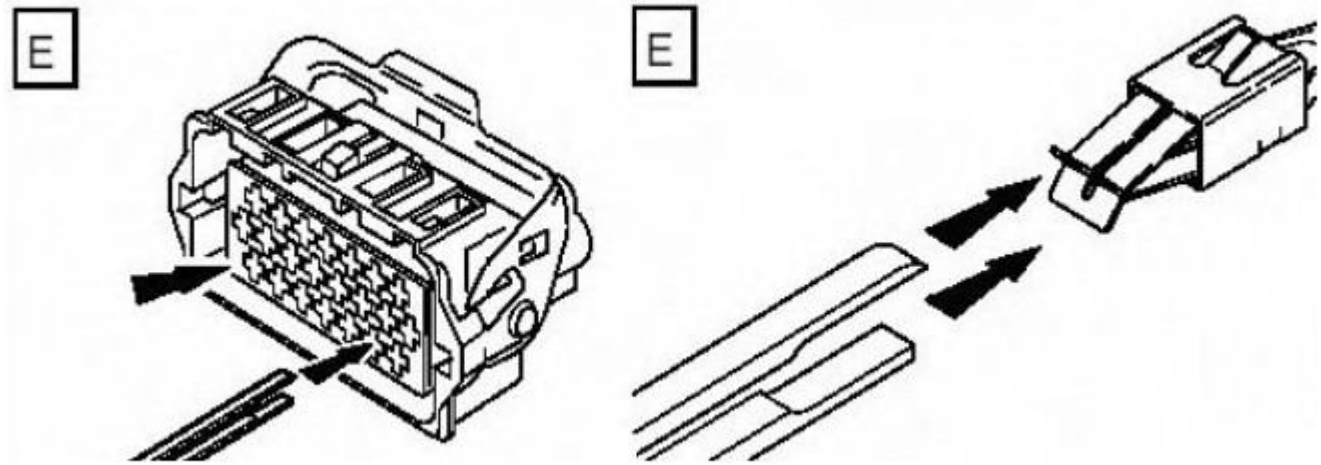

E130750

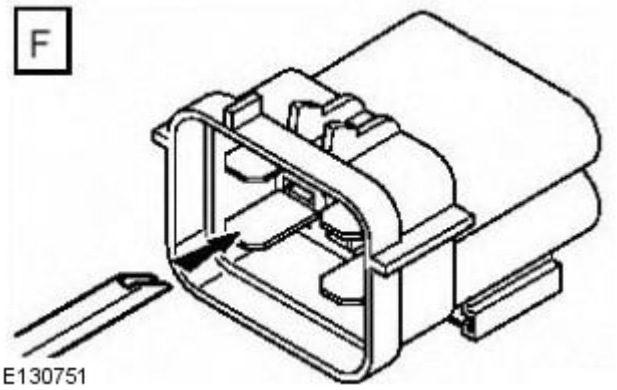

E130751

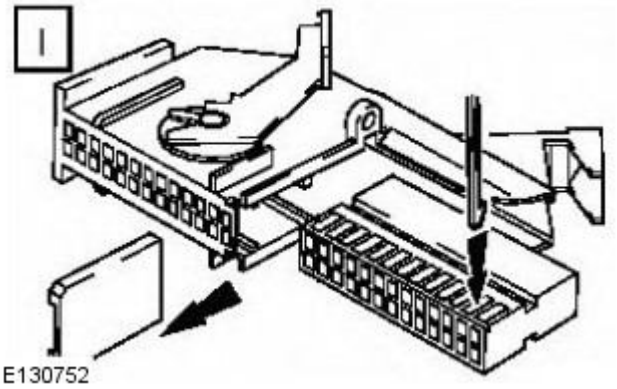

E130752

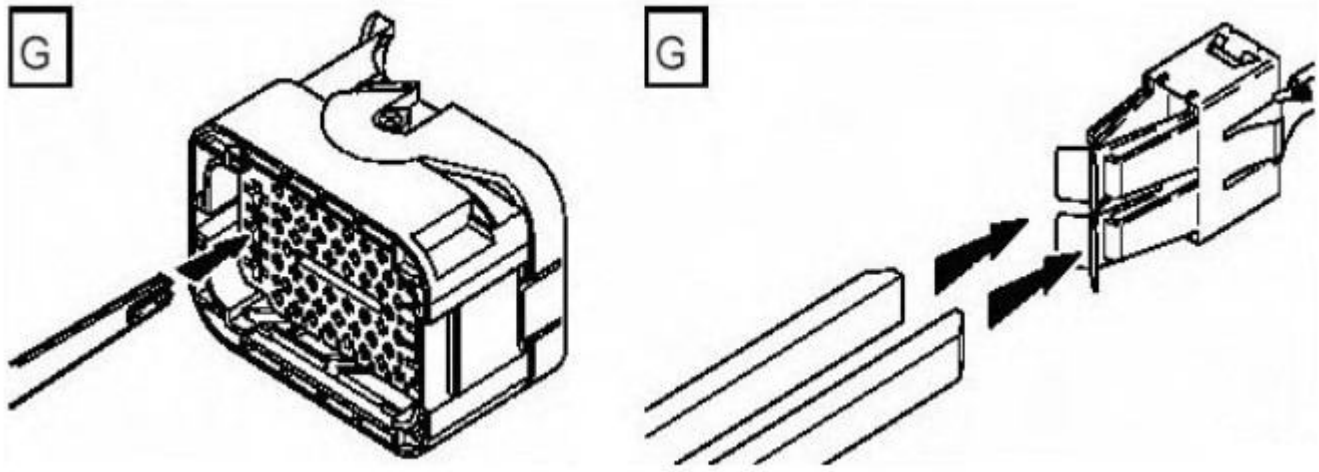

E130753

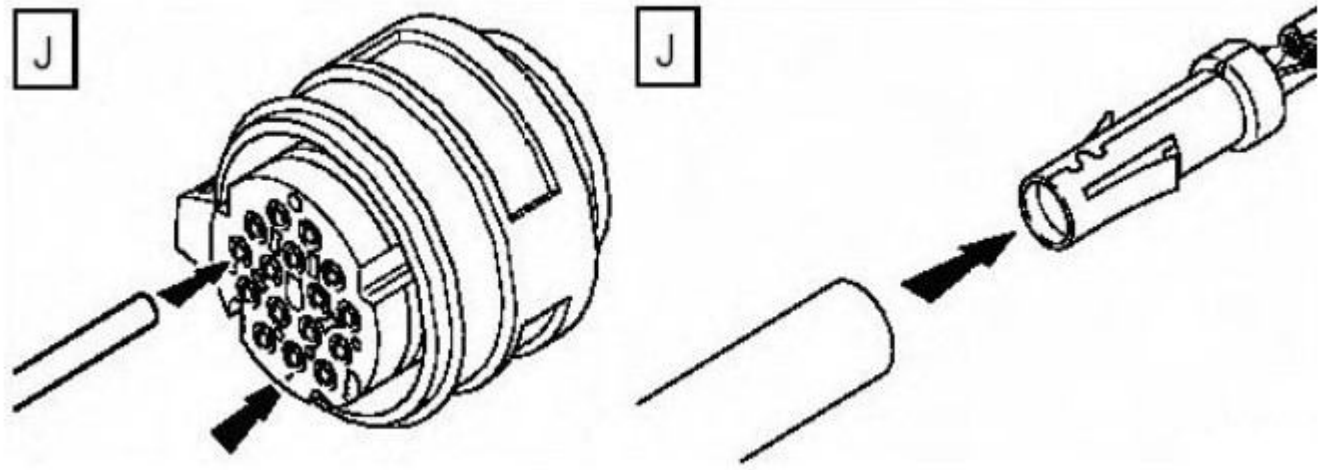

E130754

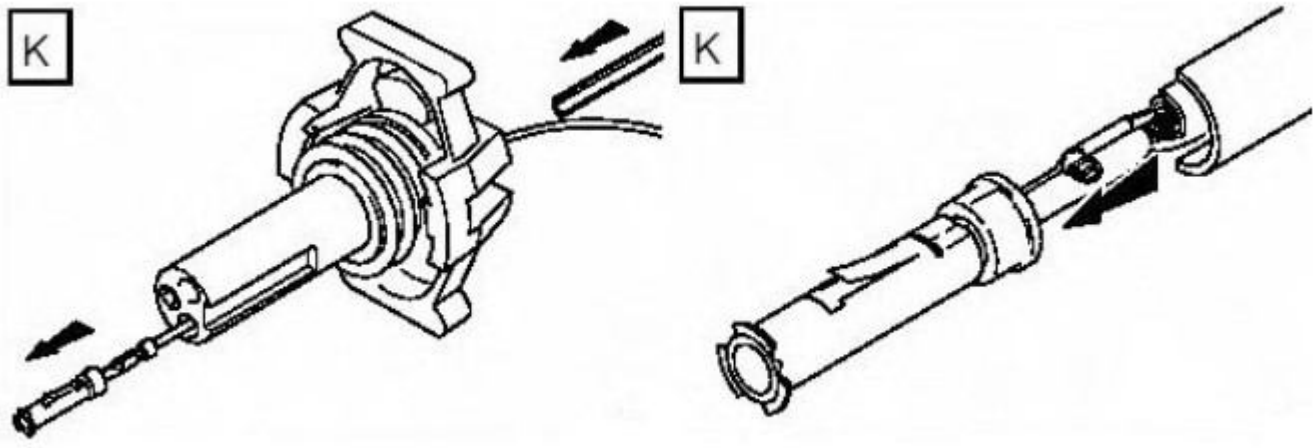

E130755

• NOTE: The chart shows the electrical connector types, terminal pins/sockets, extractor tip and anti-backout tip.

Electrical connector terminal type	Pin or socket	Extractor tip	Anti-backout tip
Mulitlock 040 series	D	A	
Mulitlock 040 series	B	A	
Mulitlock 070 series	B	B	
Mulitlock 040 series	D	B	
Econoseal III 070 series	D	B	
Econoseal III 070 series	B	B	
Econoseal III 070 series	B	B	
Econoseal III J2	D	B	
Econoseal III 250 series	B	F	
Econoseal III 250 series	D	B	
Econoseal III 250 series	B	F	
Econoseal III 250 series	D	B	
Micro-timer II 1.5mm	D	C	
Micro-timer II 1.5mm	B	C	
Std power timer 4.8 flat	D	G	
Std power timer 5.8 flat	B	D	
Std power timer 5.8 flat	B	D	
Std power timer 2.8 flat	D	D	
Std power timer 4.8 flat	D	G	
Std power timer 5.8 flat	B	D	
Ford 2.8 flat	D	E	H
Mulitlock 070 series	D	B	
Mulitlock 070 series	B	B	
Junior power timer 2.8 flat	D	D	
Sumitomo TS90 connector	B	B	H
Modu IV gold plated	D	B	
Mulitlock 040 series gold plated	D	A	
Micro qualock	D	I	
EECV	D	B	
EECV	D	B	
Kostal dia 1.50 series	D	J	
AMP 6.3 flat	D	B	
Junior power timer 2.8 flat	D	D	
2.8 series	D	B	I
Sumitomo TS90 connector	D	B	H
Ducon 0.60 gold plated	D	K	
AMP 6.3 flat	D	D	
Econoseal III 250 series	B	F	

Repair Procedure

• CAUTIONS:

Do not use crimping pliers, insulation strippers, butt splice connectors, heat shrink sleeves or pre-terminated wiring harness(s) that are not supplied with the Jaguar wiring harness repair kit. Each part has been designed to be used only with the other parts in this wiring harness repair kit.

Where the repair procedure indicates that a glue lined heat shrink sleeve should be applied, apply sufficient heat to the glue lined heat shrink to melt the glue in order to provide a water tight seal. Do **not** over heat the glue lined heat shrink sleeve so that the wiring harness insulation becomes damaged.

It is not correct to make more than five repair joints on the wiring harness to any electrical connector and if more damage is found at the same electrical connector then a new wiring harness must be installed.

- Remove the faulty terminal from the electrical connector using the extractor tool and correct tip. Make sure that any anti-backout device is released before trying to remove the terminal.

- CAUTION: : A number of electrical connector terminals are gold plated or gold flashed. When defective, they must be installed with a gold pre-terminated wiring harness(s) from the wiring harness repair kit. It is not always easy to identify the female as gold but the male pins are visually easier, therefore always check both male and female terminals to identify those which are gold. Under no circumstances are gold and tin terminals to be mixed as this will lead to early failure of the electrical contact.

  • NOTE: Never use a harness lead with a smaller diameter than the original harness lead.

  Select the correct size and type of pre-terminated wiring harness and butt splice connector from the wiring harness repair kit.
- Using the wire cutter on the stripping tool, cut the pre-terminated wiring harness and the harness cable to the required length.
- • NOTE: See illustration: **Stripping Insulation**

  From the Relationship Table, find the correct length of insulation to be stripped from the pre-terminated wiring harness and set the adjustable cable length stop to the correct length. Place the pre-terminated wiring harness in the wire stripper and remove the insulation.
- Put the cable identification sleeve(s) on to the wiring harness with the main cable colour nearest to the terminal.
- During this next step do not overtighten. Place the selected butt splice connector in the crimping tool, matching the aperture and the butt connector colours. Make sure that the window indentation in the butt connector is resting over the guide bar on the lower jaw. Partially close the grip until the butt connector is securely held in the aperture. This will give support to the butt connector while the pre-terminated wiring harness is inserted into it.
- • NOTE: See illustration: **Spice Correctly Located**

  Insert the pre-terminated wiring harness into the butt connector and make sure that the wire is against the wire stop. Close the grip firmly, crimping the lead to the butt connector. When the handles have been completely closed the butt connector will be freed from the tool as the handles are released. If the handles have not been completely closed then the jaws will hold the butt connector and it cannot be removed from the tool until the crimp is fully made by closing the handles completely.
- Make sure that the harness cable has been squarely cut and the correct length of insulation removed. If more than one splice is needed the butt connectors must be not be crimped to the wiring harness at the same distance from the connector. The splices must be staggered to prevent a bulk of splices in the same area of the wiring harness.
- It is preferable to cover the butt splice joint with heat shrink sleeve. This is desirable not essential, except where the electrical connector is a sealed electrical connector. Use the smaller diameter sleeve for red and blue pre-terminated wiring harness(s) and the large diameter sleeve for the yellow pre-terminated wiring harness(s). It is advisable to place the heat shrink over the completed joint but in some instances the sleeve will not pass over the terminal. Check, and if required, place the correct size sleeve onto the harness cable or pre-terminated wiring harness before crimping the butt splice to the wiring harness.
- Place the harness cable into the butt splice with the splice window over the guide bar. Make sure that the cable harness wire is against the stop in the butt splice, crimp the butt splice connector to the wiring harness.
- Gently pull the harness cables each side of the butt splice to make sure that a secure joint has been made.
- WARNING: Do not use a naked flame in areas where fuel or oil have been spilt. Clean the area of residual oil and fuel and wait until the fuel spill has fully evaporated.

  • CAUTIONS:

  When using a heat source make sure that it is localised and causes no damage to surrounding materials.

  Where the repair procedure indicates that a glue lined heat shrink sleeve should be applied, apply sufficient heat to the glue lined heat shrink to melt the glue in order to provide a water tight seal. Do **not** over heat the glue lined heat shrink sleeve so that the wiring harness insulation becomes damaged.

  Using a suitable heat source, shrink the sleeve over the butt splice.
- If further pre-terminated wiring harness(s) are to be installed to the same electrical connector, make sure that the lead is cut at a different length to the previous joint. This makes sure that the splices will, where possible, be staggered on the wiring harness and prevent a bulk of splices in one area.
- When all of the splices have been made, fit the terminal(s) to the electrical connector, taking care that the terminals are correctly orientated.
- Install the wiring harness cover and secure with adhesive electrical tape. Do not cover the wiring harness right to the electrical connector as the terminals must have a little movement and not be firmly bound to the electrical connector or wiring harness. Make sure that the cable identification sleeve(s) are showing at the wiring harness electrical connector.

Stripping Insulation

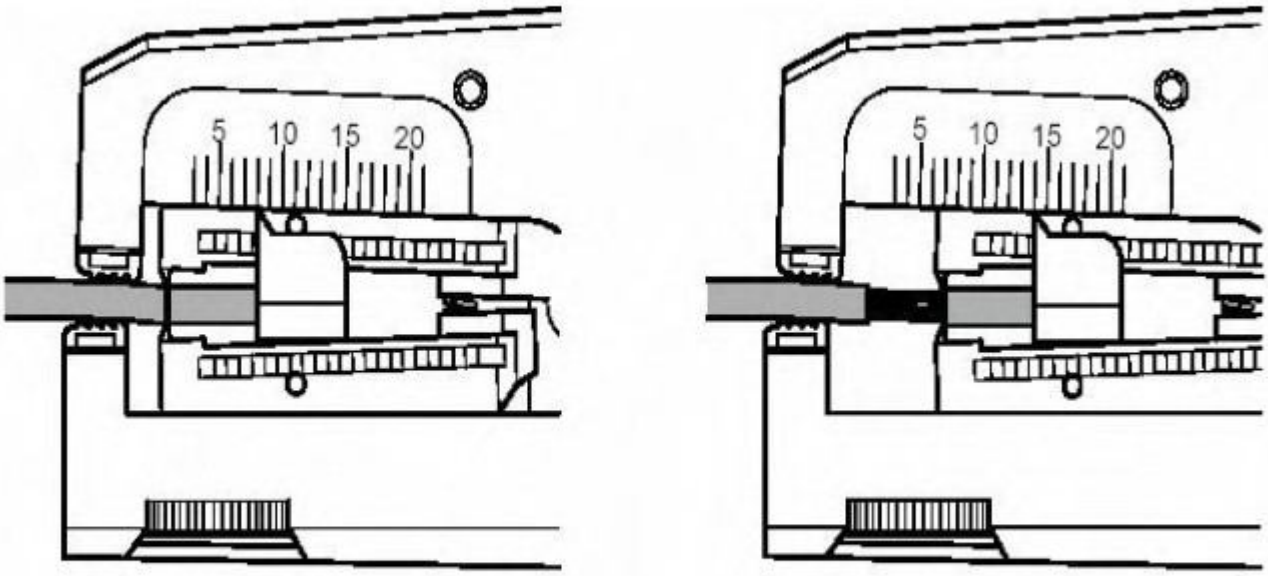

E130756

Spice Correctly Located

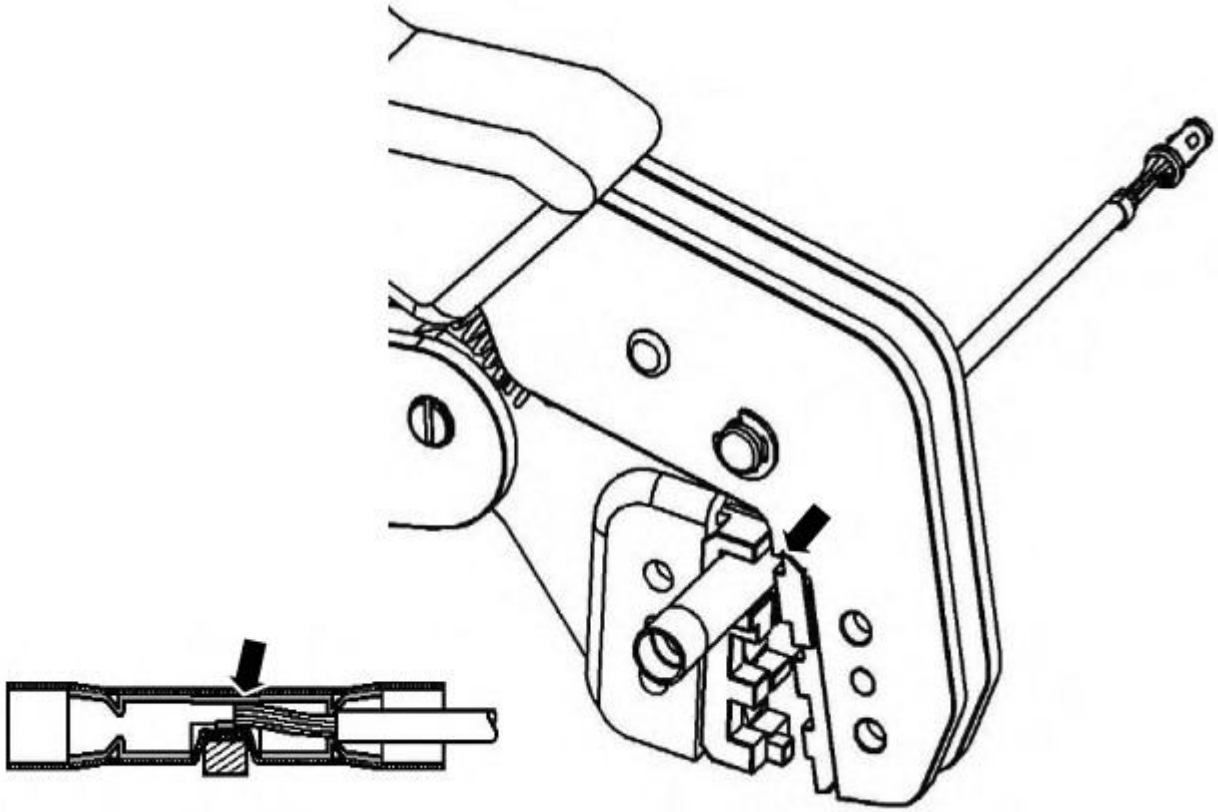

E130757

Published: 11-May-2011

Wiring Harnesses - Wiring Harness Repair

General Procedures

1. For additional information, refer to: Wiring Harness (418-02 Wiring Harnesses, Description and Operation).

Anti-Theft - Active - Anti-Theft - Active

Description and Operation

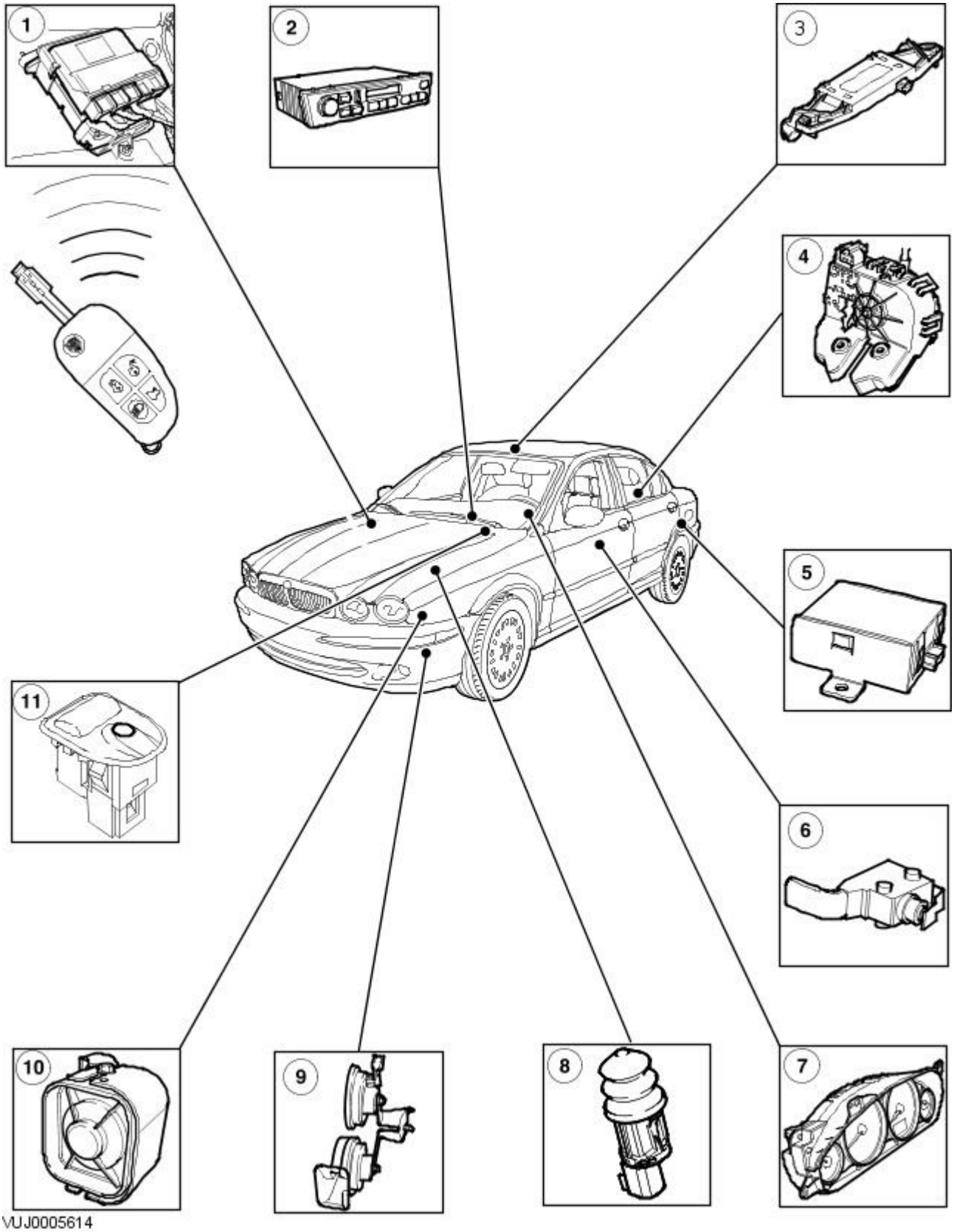

Item	Part Number	Description
1	—	General electronic module
2	—	Audio unit
3	—	Intrusion sensor (if equipped)
4	—	Door actuator
5	—	Inclination sensor (if equipped)
6	—	Door latch and ajar switch
7	—	Instrument cluster
8	—	Hood switch
9	—	Vehicle horn
10	—	Battery back up sounder (if equipped)
11	—	Security LED

The anti theft system provides protection from unauthorized entry into the vehicle. The system is incorporated and controlled by the generic electronic module (GEM). When the alarm is triggered the system flashes the turn signal lamps and sounds the alarm system horns.

The security LED (light) provides the driver with the status of the security system when the ignition is switched in the off position and the

PATS system when the ignition is switched to position II. When the ignition is switched in the off position, the LED will flash every four seconds when the security system is in the pre-arm or armed state. The security LED will illuminate for three seconds when the ignition is turned to position II, while the key is read. If there is a fault in the system, a fault code will be flashed out on the LED 60 seconds after the key entered position II.

Security System Arming

The system will be activated by the keyless entry remote transmitter when the following input sequence is followed:

1. **1.** Make sure the ignition is off and the key is not in the ignition barrel.
2. **2.** Close all the doors (unlocked), trunk and hood.
3. **3.** Operate the lock button on the transmitter to lock the doors. The turn signal lamps will flash once.
4. **4.** Operate the lock button a second time within three seconds to double lock the doors. The turn signal lamps will provide a long flash.
5. **5.** If any door, trunk or hood is ajar when the lock button is operated on the transmitter, there will be two short horn chirps and five flashes of the turn signal lamps to alert the driver that the car is not secure and has not been locked.

The system will also be activated when the following input sequence is followed:

6. **6.** Make sure the ignition is off and the key is not in the ignition barrel.
7. **7.** Close all the doors (unlocked), trunk and hood.
8. **8.** Lock all the doors, with the ignition key in the drivers door key barrel. The turn signal lamps will flash once.
9. **9.** The vehicle will lock even if there is a door open when using the key, however there will be two short horn chirps and five flashes of the turn signal lamps to alert the driver that the car is not secure.
10. **10.** To double lock the car through the drivers key barrel follow steps six and seven and then cycle the key to the unlocked position and then to the locked position within three seconds. The turn signal lamps will provide a long flash. If a door is open when an attempt is made to double lock, the car WILL NOT double lock, but follow the actions in step nine.

Opening any of the doors or the hood, after the system has been armed for 20 seconds (pre arm phase) will trigger the alarm. The alarm will sound for up to 28 seconds and will be accompanied by the turn signal warning lamps flashing (60 seconds in NA).

Disarming The Alarm System

The system can be disarmed by carrying out one of the following procedures, which would also stop the alarm from sounding.

- Driver door is unlocked with the ignition key (non EURO markets)
- If unlocked from the drivers door (EURO markets) the ignition is switched to position II (with a valid ignition key).
- Turn the ignition switch to position II with a valid ignition key at any time.

Or

- Operate the UNLOCK button on the keyless entry remote transmitter.

Panic Alarm Activation (All Markets)

Operating the headlamp convenience button on the remote keyless entry transmitter three times within three seconds will activate the panic alarm. The alarm will be sounded for up to 28 seconds and be accompanied by the turn signals flashing.

The panic alarm can be stopped by again by pressing the headlamp convenience button three times within three seconds, or operating the unlock button on the transmitter, or switching the ignition to position II (with a valid key). It is also possible to stop the panic alarm through the drivers door key barrel (non EURO markets) if the vehicle is in the locked and armed state.

Published: 11-May-2011

Anti-Theft - Active - Anti-Theft - Active

Diagnosis and Testing

Inspection and Verification

1. **1.** Verify the customer concern.
2. **2.** Visually inspect for obvious signs of mechanical or electrical damage.

Visual Inspection Chart

Mechanical	Electrical
• Door cylinder(s) • Door lock linkage(s) • Door lock cable(s) • Switch(s)	• Fuse(s) • Wiring harness for damage or corrosion • Electrical connector(s) • Switch(s) • Module (GEM) • Sensor(s) • Siren

3. **3.** If an obvious cause for an observed or reported concern is found, correct the cause (if possible) before proceeding to the next step.
4. **4.** If the cause is not visually evident, verify the symptom and refer to the Jaguar Approved Diagnostic System.

Anti-Theft - Active - Anti-Theft Alarm Horn

Removal and Installation

Removal

1. Remove the left-hand front fender splash shield.
   For additional information, refer to: Fender Splash Shield (501-02 Front End Body Panels, Removal and Installation).
2. Detach the anti-theft alarm horn electrical connector.

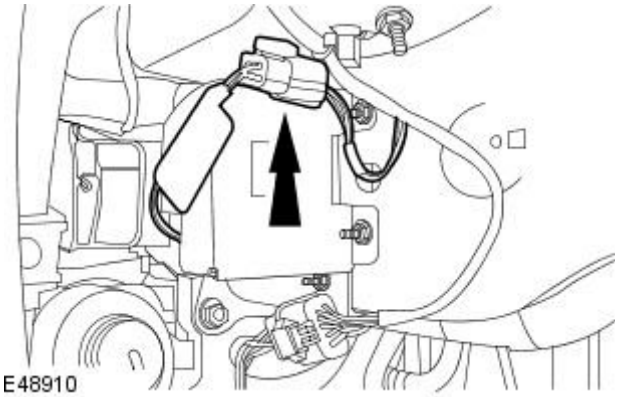

3. Disconnect the anti-theft alarm horn electrical connector.

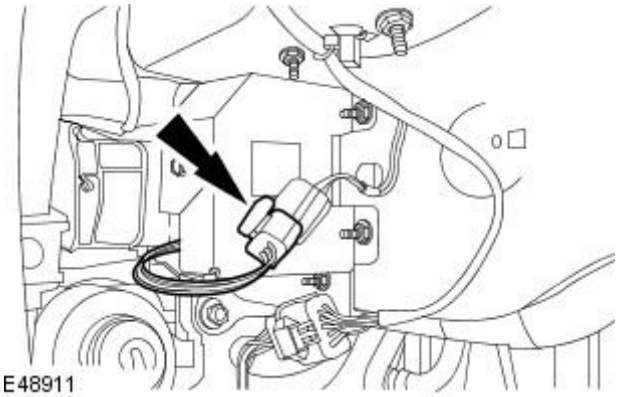

4. Detach the front bumper electrical connector.

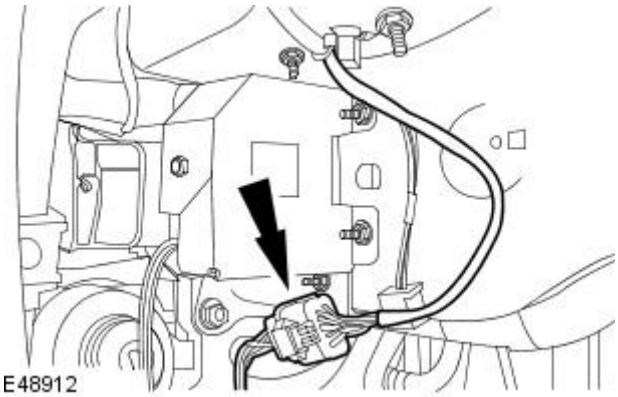

5. Remove the anti-theft alarm horn.

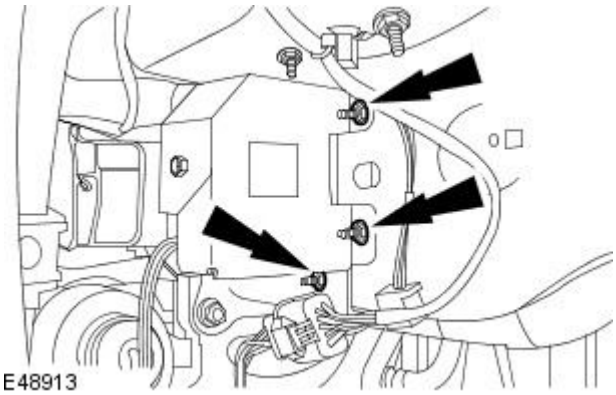

Installation

1. To install, reverse the removal procedure.

Anti-Theft - Passive - Anti-Theft - Passive

Description and Operation

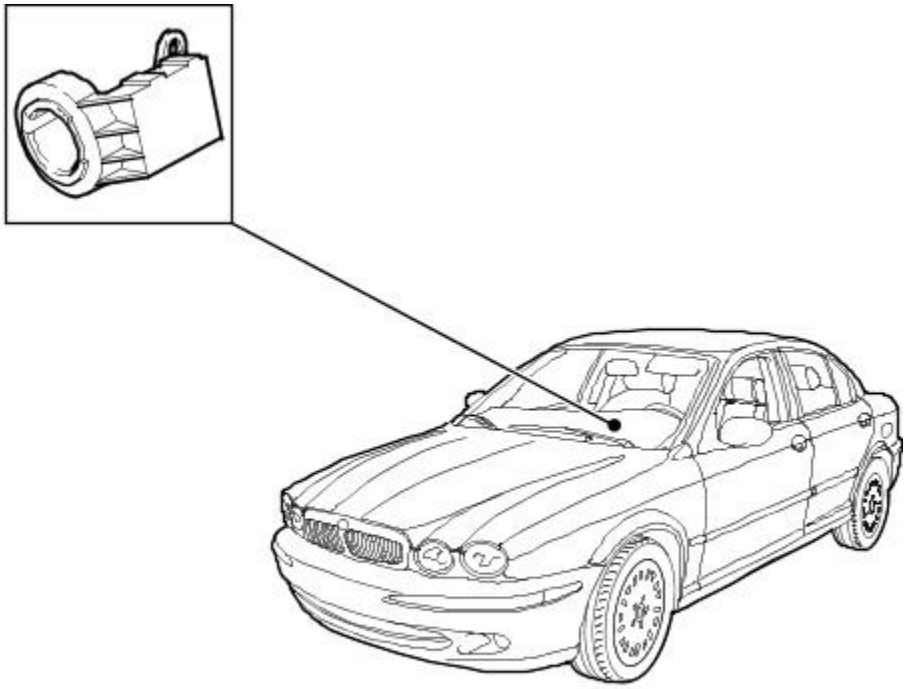

VUJ0005615

Item	Part Number	Description
1	—	PATS transceiver module

The passive anti theft system (PATS) is a feature to prevent the vehicle from being driven away by an unauthorized person. The PATS system consists of electronically coded keys, a transceiver device and a control module. When the ignition is switched to position II, the transceiver energizes the ignition key to read it's electronic code that is transmitted back. If the code read equals a code stored in the control module, the engine control module (ECM) will let the engine start. Otherwise, starting of the engine is disabled (through the starter disable relay and the ECM). Note a different code is used by the PATS system everytime.

Anti-Theft - Passive - Anti-Theft - Passive

Diagnosis and Testing

Inspection and Verification

1. **1.** Verify the customer concern.
2. **2.** Visually inspect for obvious signs of mechanical or electrical damage.

Visual Inspection Chart

Mechanical	Electrical
• Ignition lock cylinder • PATS key • Two PATS keys on the same keyring • Uncoded PATS key	• Wiring harness for damage or corrosion • Electrical connector(s) • Relay(s) • Ignition switch • Range sensor (Auto transmission) • Engine control module (ECM) • Tansceiver • fuse(s)

3. **3.** If an obvious cause for an observed or reported concern is found, correct the cause (if possible) before proceeding to the next step.
4. **4.** If the cause is not visually evident, verify the symptom and refer to the Jaguar Approved Diagnostic System.

Anti-Theft - Passive - Anti-Theft Security Access

General Procedures

1. The complexity of the electronics involved with the anti theft, of which the security access is a part, and the multiplexed communication network which are connected to it preclude the use of workshop general electrical test equipment. Therefore, reference should be made to the WDS User Guide for detailed instructions on security access . The WDS systematically tests and analyses all functions and the various systems affected by it. Where a fault is indicated, some basic diagnostic methods may be necessary to confirm that connections are good and that wiring is not damaged before installing a new component.

Published: 11-May-2011

Anti-Theft - Passive - Key Programming Using Diagnostic Equipment

General Procedures

1. The complexity of the electronics involved with the anti theft, of which the key programming is a part, and the multiplexed communication network which are connected to it preclude the use of workshop general electrical test equipment. Therefore, reference should be made to the WDS User Guide for detailed instructions on key programming . The WDS systematically tests and analyses all functions and the various systems affected by it. Where a fault is indicated, some basic diagnostic methods may be necessary to confirm that connections are good and that wiring is not damaged before installing a new component.

Anti-Theft - Passive - Passive Anti-Theft System (PATS) Transceiver

Removal and Installation

Removal

Vehicles without driver lower air bag

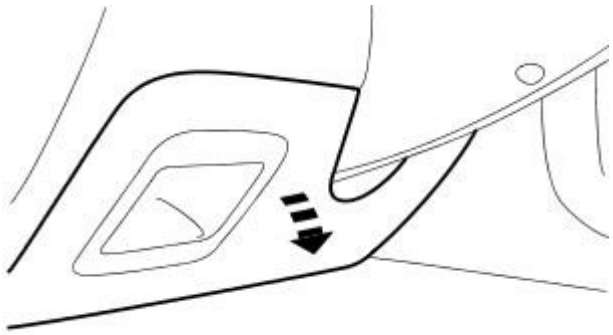

VUJ0004808

1. Remove the instrument panel lower trim panel.

Vehicles with driver lower air bag

2. Remove the driver lower airbag module.
   For additional information, refer to: Driver Lower Air Bag Module (501-20B Supplemental Restraint System, Removal and Installation).

All vehicles

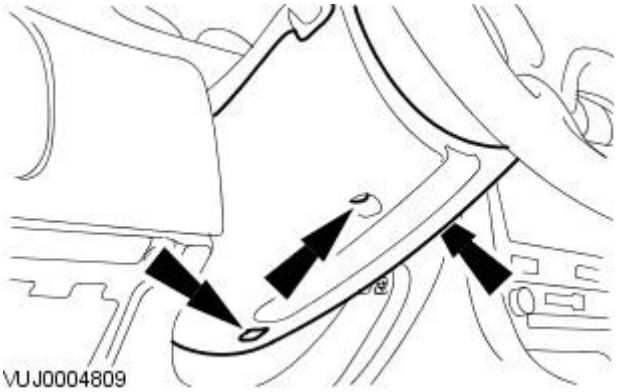

VUJ0004809

3. Remove the steering column lower shroud.

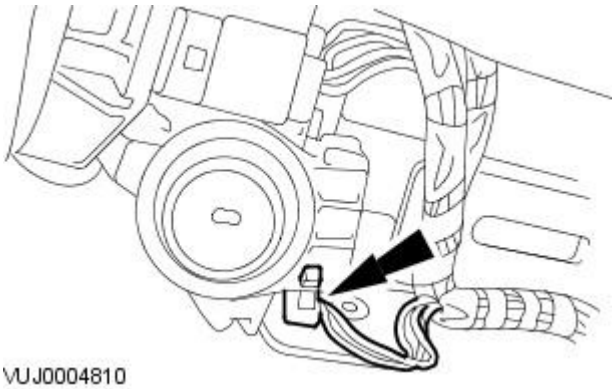

VUJ0004810

4. Disconnect the passive anti-theft system (PATS) transceiver electrical connector.

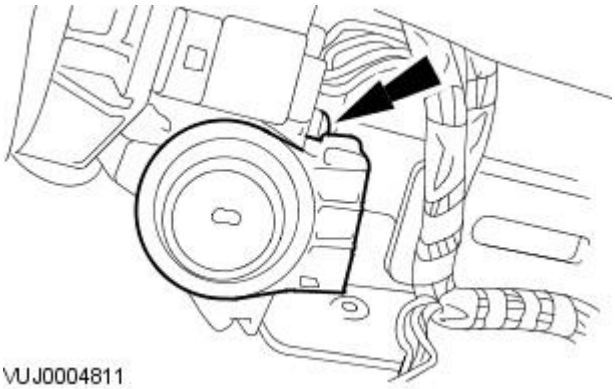

VUJ0004811

5. Remove the PATS transceiver module.

Installation

1. To install, reverse the removal procedure.

Remote Convenience - Universal Transmitter

Description and Operation

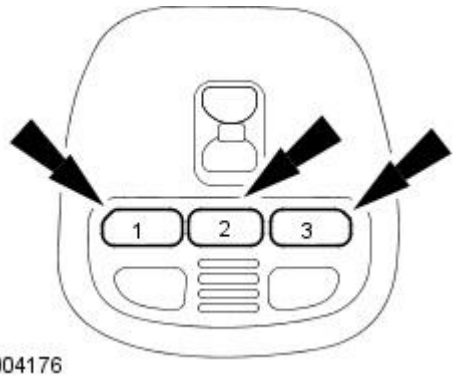

VUJ0004176

The HomeLink universal transmitter provides a convenient way to replace up to three hand-held transmitters with a single built-in device. The universal transmitter:

- will operate garage doors, gates and home/office lighting and security systems.
- will actually learn and transmit the radio frequency of up to three hand-held transmitters from any of the systems mentioned above.
- is an integral part of the roof console assembly and is powered by the vehicle battery and charging system.

Published: 11-May-2011

Remote Convenience - Universal Transmitter

Diagnosis and Testing

Inspection and Verification

1. **1.** Verify the customer concern by operating the system.
2. **2.** Visually inspect for obvious signs of mechanical damage.

Visual Inspection

Mechanical
• Damaged universal transmitter • Damaged receiver

3. **3.** If an obvious cause for an observed or reported concern is found, correct the cause (if possible) before proceeding to the next step.
4. **4.** If the concern is not visually evident, verify the concern and refer to the Symptom Chart. Refer to the electrical circuit diagrams for schematic and connector information.

Symptom Chart

Symptom	Possible Cause	Action
The universal transmitter is inoperative	• Universal transmitter • Receiver unit	GO to Pinpoint Test A.

Pinpoint Tests

PINPOINT TEST A : THE UNIVERSAL TRANSMITTER IS INOPERATIVE	
TEST CONDITIONS	**DETAILS/RESULTS/ACTIONS**
A1: CHECK THE ROOF CONSOLE ASSEMBLY OPERATION	
	1 Check the illumination of the interior lamp.
	Does the interior lamp illuminate? **Yes** GO to A2. . **No** Check and rectify fault with interior lamp circuit. TEST the system for normal operation.
A2: PROGRAM HAND-HELD TRANSMITTER INTO UNIVERSAL TRANSMITTER	
	• NOTE: If the garage door is equipped with rolling codes, refer to Training a Garage Door Opener Equipped With "Rolling Codes." 1 Program the universal transmitter. REFER to: Universal Transmitter Programming (419-02 Remote Convenience, General Procedures).
	Did the universal transmitter program successfully? **Yes** The universal transmitter is OK. VERIFY receiver operation. **No** REPLACE the roof console assembly. TEST the system for normal operation.

Remote Convenience - Universal Transmitter Programming

General Procedures

WARNING: A garage door opening system that cannot stop or reverse itself after detecting an object in its path does not meet current federal safety standards. To decrease the risk of serious injury or death, do not use this HomeLink transmitter with a door opening system that lacks stop and reverse features as required by federal standards. This includes any garage door opening system manufactured before April 1, 1982. For more information, call HomeLink customer assistance at 1-800-355-3515.

1. CAUTION: During this procedure, the system that you are programming will be made to operate. Make sure that people or objects are clear of the garage door or gate being programmed.

Verify the hand-held transmitter is operative.

2. Prepare for programming the universal transmitter by erasing all three channels by holding down the two outside buttons until the red light begins to flash (20-30 seconds). Release both buttons.

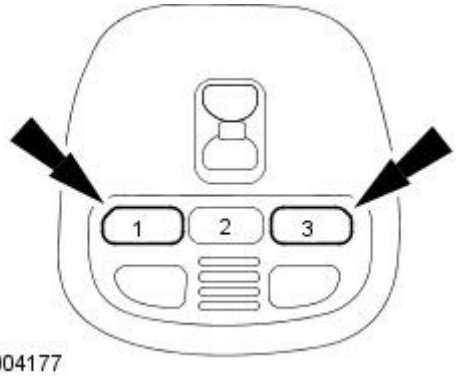

VUJ0004177

3. Select one of the three universal transmitter channels to be programmed by pressing the desired button.

4. Hold the end of the hand-held transmitter 50-150mm (2-6 in) from the front surface of the universal transmitter so that the red light can still be seen.

5. NOTE: During programming, the hand-held transmitter may automatically stop transmitting after two seconds, which may not be long enough to program the universal transmitter. If programming this type of hand-held transmitter, continue to hold the button on the universal transmitter while re-pressing the hand-held transmitter button every two seconds (Canada only).

Use both hands to press the hand-held transmitter button and the desired button on the universal transmitter. Do not release either button.

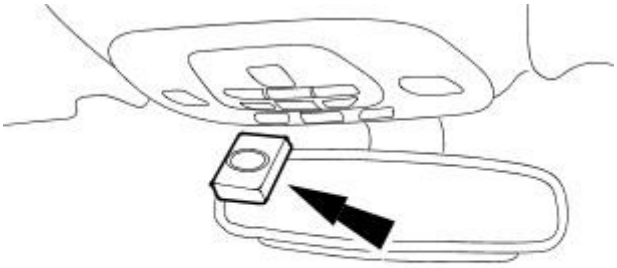

VUJ0004178

6. Hold down both buttons until the red light on the universal transmitter flashes, first slowly and then rapidly. Release both buttons when the rapid flashing begins. The universal transmitter has successfully learned the new frequency signal and can be used in place of the hand-held transmitter(s).

7. NOTE: If the hand-held transmitter appears to program the universal transmitter but does not open the garage door, the garage door opener may have a "code protected" or "rolling code" feature.

To operate, simply press the appropriate button on the universal transmitter. The red light is on while the signal is being transmitted.

Training a Garage Door Opener Equipped With "Rolling Codes"

1. Program the hand-held transmitter to the universal transmitter. For additional information, refer to Universal Transmitter Programming in this section.

2. Train the garage door opener receiver to recognize the universal transmitter.

1. Remove the cover panel from the garage door opener receiver.
2. Locate the training button on the garage door opener receiver. Location and color of the button may vary by garage door opener manufacturer. Refer to the garage door opener instruction manual or call HomeLink customer assistance at 1-800-355-3515.
3. Press the training button on the garage door opener receiver for 1-2 seconds.
4. Press the programmed universal transmitter button for as long

as the universal transmitter red light flashes (1-2 seconds). Release the button and re-press the button to confirm that the universal transmitter is trained to the receiver.

5. The garage door opener should recognize the universal transmitter.

Erasing Channels

1. NOTE: Individual channels cannot be erased, but can be reprogrammed using the procedures for programming.
For additional information, refer to Universal Transmitter Programming in this section.

To erase all three programmed channels, hold down the two outside buttons until the red light begins to flash (20-30 seconds). Release both buttons.

Navigation System - Navigation System

Description and Operation

4-Door

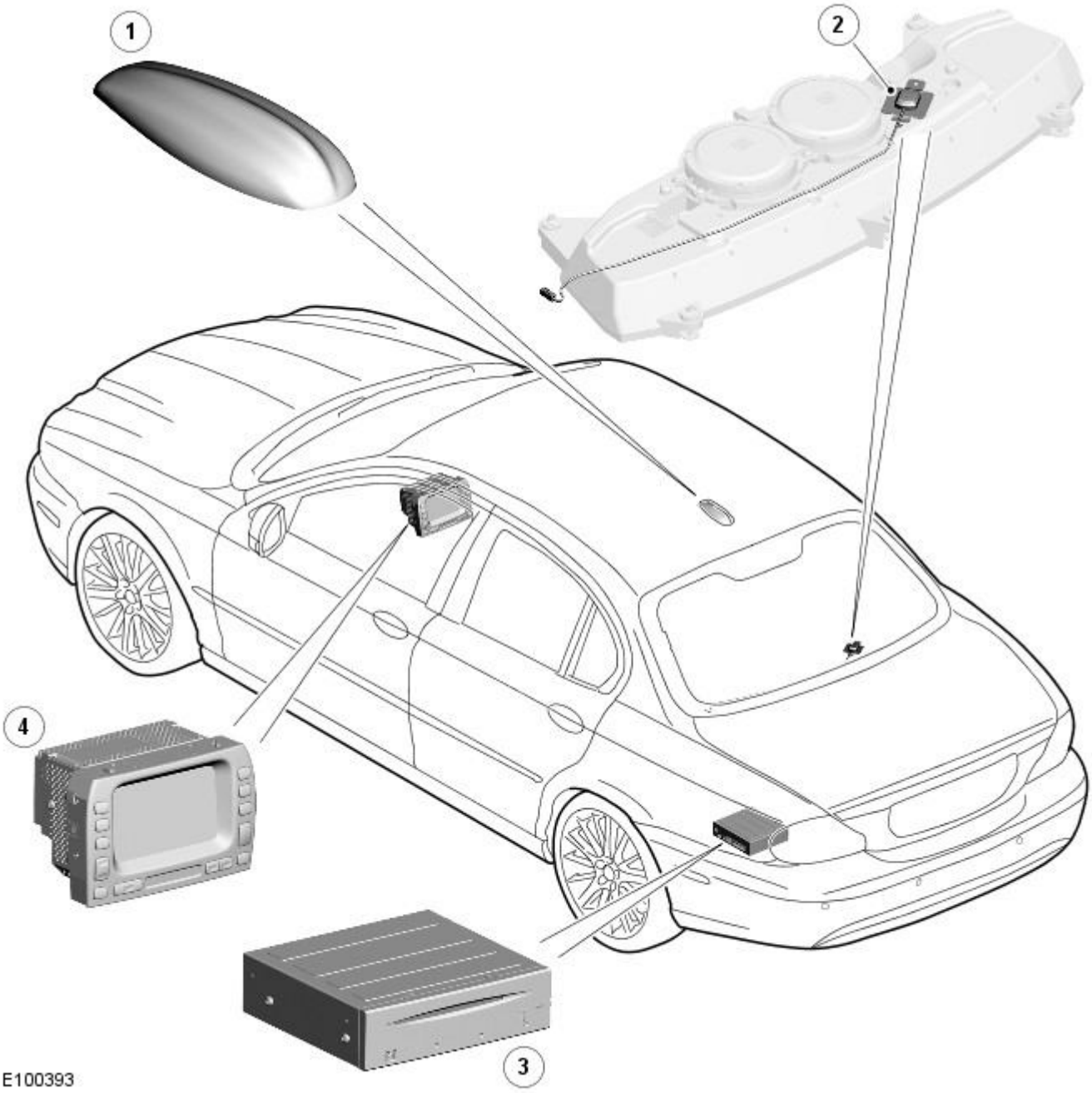

Item	Part Number	Description
1	—	Roof pod antenna module (from 2009MY)
2	—	Navigation GPS antenna (up to 2009MY)
3	—	Navigation computer
4	-	Navigation system display

Wagon

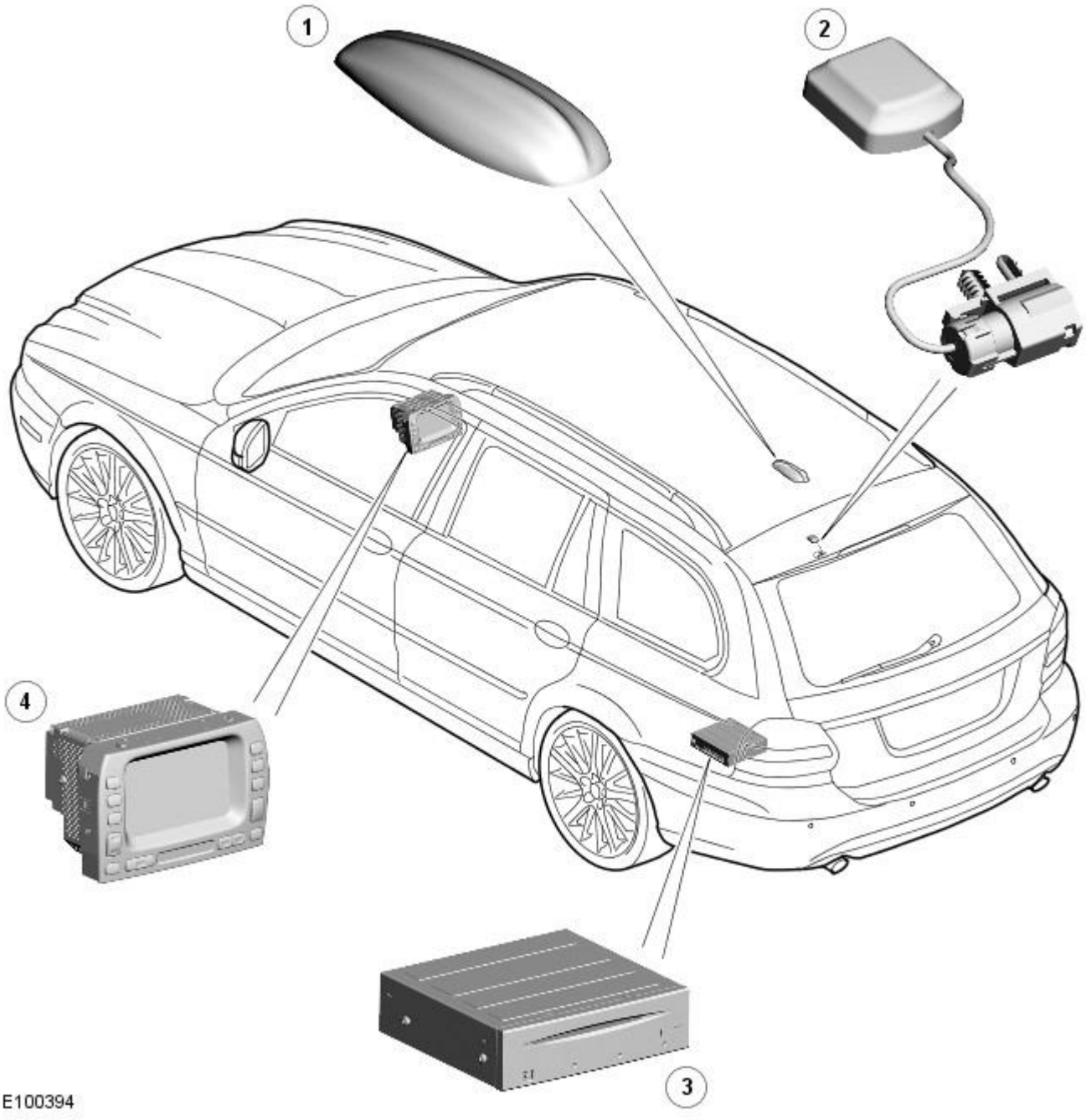

Item	Part Number	Description
1	-	Roof pod antenna module (from 2009MY)
2	-	Navigation GPS antenna (up to 2009MY)
3	-	Navigation computer
4	-	Navigation system display

The navigation system utilizes the following functions.

- Voice guidance volume controlled via audio head unit
- Screen brightness controlled via on screen menus
- Any key turns system "ON"
- Language choice controlled via on screen menus

The navigation head unit comprises of a 7" full color screen which also provides control of the phone, audio system, climate control, vehicle emergency messaging system (VEMS), voice control, and TV. The navigation computer is situated in the luggage compartment on the LH (left-hand) side and is covered by a protective trim panel.

On vehicles up to 2009MY, the GPS (global positioning system) antenna is located beneath the parcel shelf trim on a 4-door vehicle and beneath the rear spoiler on wagon.

On vehicles from 2009MY, the GPS antenna is located in the roof pod antenna module on both the 4-door and the wagon.

The system utilizes signals from the GPS antenna, speed messages from the instrument cluster, ABS (anti-lock brake system) unit and the GYRO sensor's signals to enable the navigation computer to calculate, with the aid of DVD (digital versatile disc) map data, the position of the vehicle. After entering the required destination, the driver is guided along by both visual guidance and voice instructions. Even if the driver strays off the route, the system calculates a new route showing the easiest way back to the original destination. On route, it can also point out useful landmarks such as, petrol stations, restaurants, hotels, Jaguar dealers, and car parks.

Japanese market vehicles have a navigation computer with integrated voice recognition for control of the navigation system. The Japanese system also has the addition of Vehicle Information and Communication System (VICS) which provides real time traffic information.

Navigation System - Navigation System

Diagnosis and Testing

Principle of Operation

For a detailed description of the navigation system, refer to the relevant Description and Operation sections in the workshop manual. REFER to: Navigation System (419-07 Navigation System, Description and Operation).

Inspection and Verification

1. **1.** Verify the customer concern.
2. **2.** Visually inspect for obvious signs of mechanical or electrical damage.

Visual Inspection Chart

Mechanical	Electrical
• Navigation system DVD player Mechanism	• Navigation system display • Navigation system module • GPS antenna • Wiring harness for damage and corrosion • Electrical connector(s) • ABS Module • Audio unit

3. **3.** If an obvious cause for an observed or reported concern is found, correct the cause (if possible) before proceeding to the next step.
4. **4.** If the cause is not visually evident, check for Diagnostic Trouble Codes (DTCs) and refer to the DTC Index.

DTC Index

CAUTION: When probing connectors to take measurements in the course of pin point tests, use the adapter kit, part number 3548-1358-00

• NOTE: If the control module/component is suspect and the vehicle remains under manufacturer warranty, refer to the warranty policy and procedures manual (section B1.2), or determine if any prior approval program is in operation, prior to the installation of a new component.

• NOTE: When performing voltage or resistance tests, always use a digital multimeter (DMM) accurate to three decimal places and with a current calibration certificate. When testing resistance, always take the resistance of the DMM leads into account.

• NOTE: Check and rectify basic faults before beginning diagnostic routines that involve pinpoint tests.

• NOTE: Inspect connectors for signs of water ingress, and pins for damage and/or corrosion.

• NOTE: If DTCs are recorded and, after performing the pinpoint tests, a fault is not present, an intermittent concern may be the cause. Always check for loose connections and corroded terminals.

DTC	Description	Possible Cause	Action
B1342	ECU is defective	• Satellite navigation system module - internal ECU failure	Carry out any pinpoint tests associated with this DTC using the manufacturer approved diagnostic system. check navigation system module for internal failure. Install a new module as required, refer to the new module installation not at the top of the DTC index.
B2197	TV module error	• Satellite navigation system display - module or switch fault	Carry out any pinpoint tests associated with this DTC using the manufacturers approved diagnostic equipment. Check the satellite navigation system module for failure. Install a new module as required, refer to the new module installation note at the top of the DTC index.
B2198	Traffic Master module error	• Satellite navigation system module - traffic master module fault	Refer to electrical circuit diagrams, notes and check navigation system module communication circuit to traffic master module for failure. install a new module as required, refer to the new module installation note at the top of the DTC index.
B2199	VICS Module Error	• Satellite navigation system module - VICS (vehicle information control system) module fault	Refer to electrical circuit diagrams, notes and check navigation system module communication circuit to vehicle information control system module for faults. install a new module as required, refer to the new module installation note at the top of the DTC index.
B2201	No communication with traffic master module	• Satellite navigation system module - traffic master communication fault. This DTC is logged if the module is not fitted. It must be masked out by the tester when the module is not fitted to a particular vehicle	Refer to electrical circuit diagrams, notes and check navigation system module communication circuit to traffic master module for a fault. Install a new module as required, refer to the new module installation note at the top of the DTC index.
B2202	No communication to VICS module	• Satellite navigation system module to vehicle information control module - communication fault. This DTC is logged if the module is not fitted. It must be masked out when it is not fitted to a particular vehicle.	Refer to electrical diagrams, nots and check navigation system module communications circuit to vehicle information control module for faults.
B2204	GPS Antenna connection open or short	• Satellite navigation module (GPS) Antenna - open circuit or short circuit	Carry out any pinpoint tests associated with this DTC using the manufacturer approved diagnostic system. refer to electrical circuit diagrams, notes and check navigation system module (GPS) antenna for open or short circuit.

DTC	Description	Possible Cause	Action
B2205	GPS receiver fault	• Satellite navigation system module - global positioning satellite receiver fault	Carry out any pinpoint tests associated with this DTC using the manufacturer approved diagnostic system. Refer to the electrical circuit diagrams, notes and check navigation system module global positioning satellite (GPS) antenna circuit. Check the antenna is not obstructed (vehicle must be outside when being tested). Replace module is fault persists.
B2206	Gyroscope fault	• Satellite navigation system module - gyroscope fault	Carry out any pinpoint tests associated with this DTC using the manufacturer approved diagnostic system. Refer to electrical circuit diagrams, nots and check navigation system module for faults. Install a new module as required, refer to the new module/component installation note at the top of the DTC index.
B2207	Internal ECU ROM checksum fault	• Satellite navigation system - module internal failure	Refer to electrical circuit diagrams, notes and check the navigation system module for faults. Install a new module as required, refer to the new module/component installation note at them top of the DTC index.
B2208	Navigation module to display and switch module communication error	• Satellite navigation system module - communication to display and switch module fault.	Refer to electrical circuit diagrams, notes and check navigation system display and switch module communication circuit for fault
B2646	Antenna circuit open circuit #1	• Satellite navigation system module navigation system antenna - open circuit	refer to electrical diagrams, notes and check navigation systems antenna circuit for open circuit. To restore power the fault must be removed and the user must key off and on.
B2647	Antenna circuit open circuit #2	• Satellite navigation system module navigation system antenna - open circuit	Refer to electrical diagrams, notes and check navigation systems antenna circuit for open circuit. To restore power the fault must be removed and the user must key off and on.
B2648	Antenna circuit open circuit #3	• Satellite navigation system module navigation system antenna - open circuit	Refer to electrical diagrams, notes and check navigation systems antenna circuit for open circuit. To restore power the fault must be removed and the user must key off and on.
B2649	Antenna circuit open circuit #4	• Satellite navigation system module navigation system antenna - open circuit	Refer to electrical diagrams, notes and check navigation systems antenna circuit for open circuit. To restore power the fault must be removed and the user must key off and on.
B2650	Antenna circuit short circuit #1	• Satellite navigation system module navigation system antenna - short to power or ground	Refer to electrical diagrams, notes and check navigation systems antenna circuit for short to power or ground. To restore power the fault must be removed and the user must key off and on.
B2651	Antenna circuit short circuit #2	• Satellite navigation system module navigation system antenna - short to power or ground	Refer to electrical diagrams, notes and check navigation systems antenna circuit for short to power or ground. To restore power the fault must be removed and the user must key off and on.
B2652	Antenna circuit short circuit #3	• Satellite navigation system module navigation system antenna - short to power or ground	Refer to electrical diagrams, notes and check navigation systems antenna circuit for short to power or ground. To restore power the fault must be removed and the user must key off and on.
B2653	Antenna circuit short circuit #4	• Satellite navigation system module navigation system antenna - short to power or ground	Refer to electrical diagrams, notes and check navigation systems antenna circuit for short to power or ground. To restore power the fault must be removed and the user must key off and on.
B2655	Switch and display module is defective	• Satellite navigation system module - display faulty	Refer to electrical circuit diagrams, notes and check navigation system display and switch module for failure. Install a new display module as required. Refer to the new module/component installation note at the top of the DTC index
B2656	DVD (Digital Versatile Disk) error	• Satellite navigation system module -DVD error (DVD is integral to the navigation system module ECU)	Refer to electrical circuit diagrams, notes and check navigation system module for faults. Install a new module as required. Refer to the new module/component installation note at the top of the DTC index

Navigation System - Navigation System Antenna4-Door, VIN Range: E96603->J39905

Removal and Installation

Removal

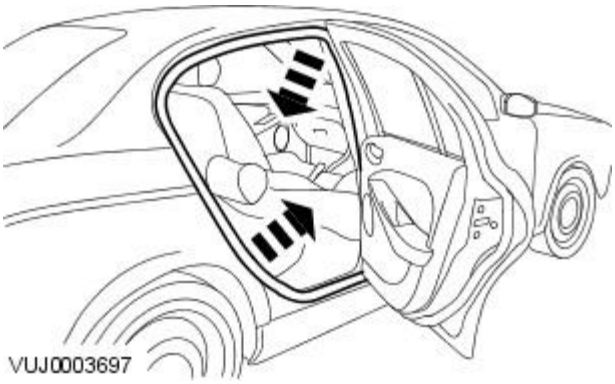

1. Detach the rear door opening weather-strips.
   - Left-hand shown, right-hand similar.

2. Remove the rear seat side bolsters. For additional information, refer to Section 501-10 Seating.
3. Remove the C-pillar trim panels. For additional information, refer to Section 501-05 Interior Trim and Ornamentation.
4. Detach the seat belt reel trim panels.
   - Left-hand shown, right-hand similar.

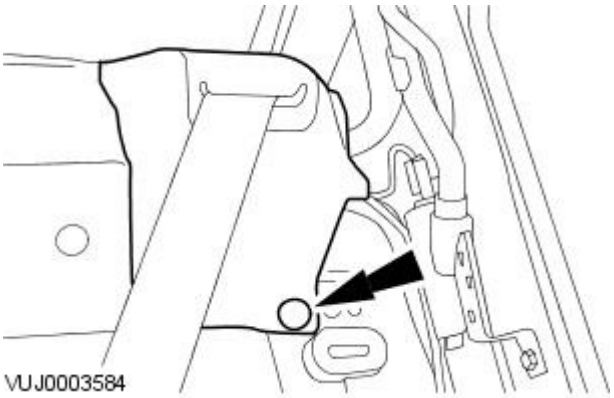

5. Remove the rear seat backrest latch covers.
   - Left-hand shown, right-hand similar.

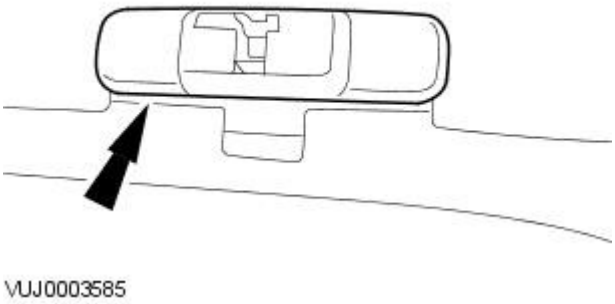

6. Detach the parcel shelf trim panel.

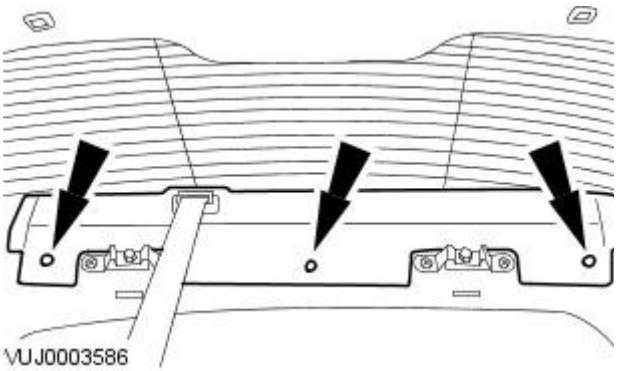

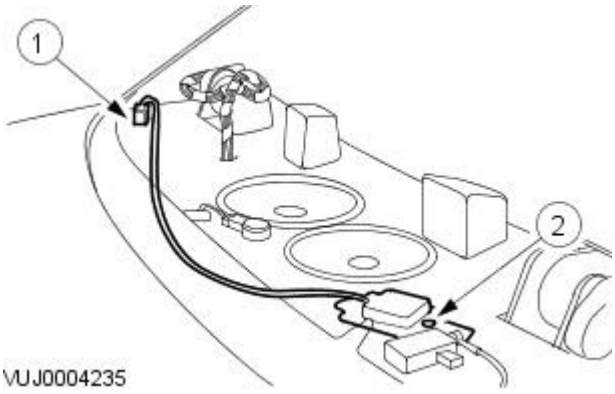

7. Remove the GPS antenna.

1. Disconnect the GPS antenna electrical connector.
2. Remove the GPS antenna.
    1. Remove the pop rivet.

Installation

1. To install, reverse the removal procedure.

Navigation System - Navigation System Antenna4-Door, VIN Range: J39906->V99999

Removal and Installation

Removal

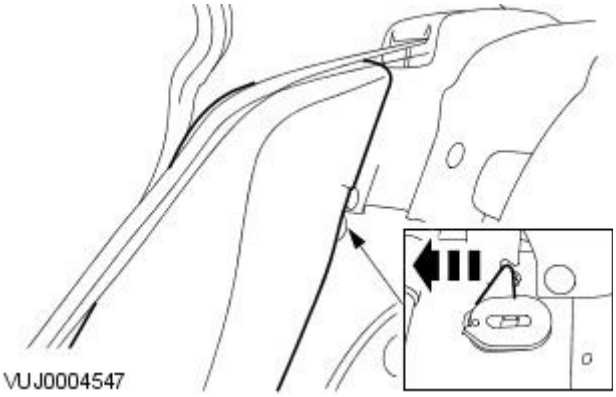

1. Fold down the rear seat backrests.

2. Detach the rear seat backrest bolsters.

- Press the tangs.

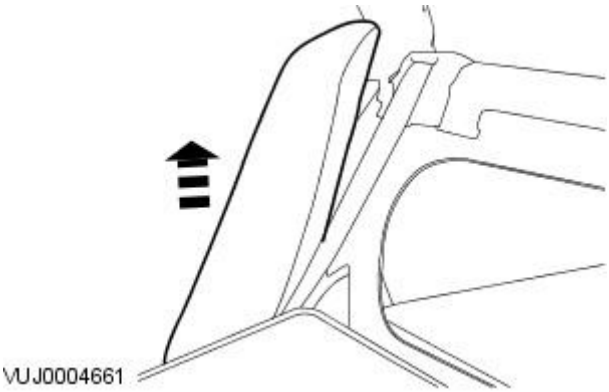

3. Remove the rear seat backrest bolsters.

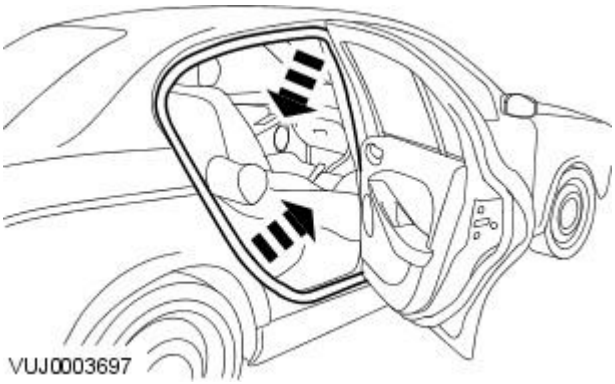

4. NOTE: Right-hand shown, left-hand similar.

Detach the rear door opening weather-strips.

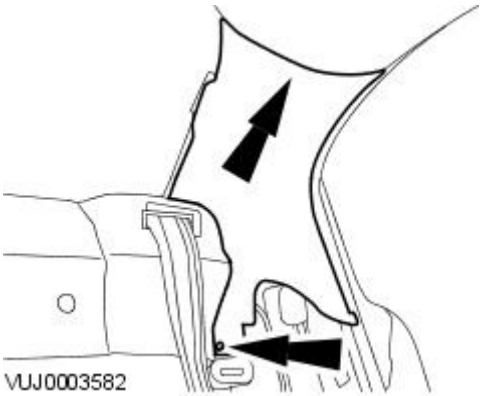

5. NOTE: The C-pillar trim panel is secured to the top of the C-pillar by a retaining strap. The retaining strap must be detached from the C-pillar before the C-pillar trim panel is removed.

• NOTE: Left-hand shown, right-hand similar.

Detach the C-pillar trim panels.

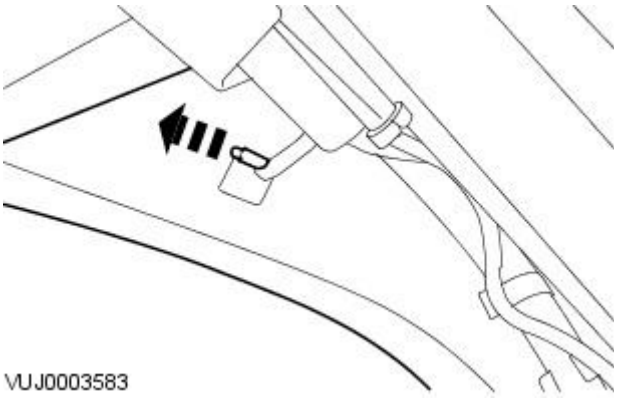

6. Remove the C-pillar trim panels.

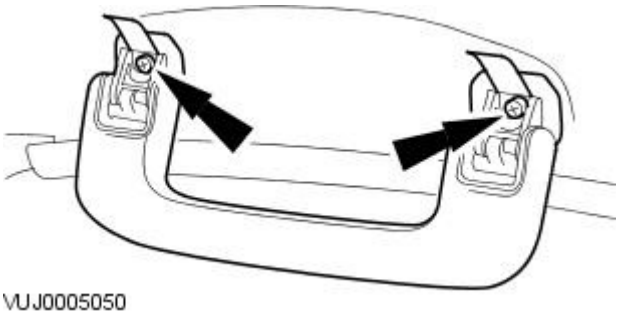

7. Detach the covers to expose the screws and remove the rear passenger assist handles.

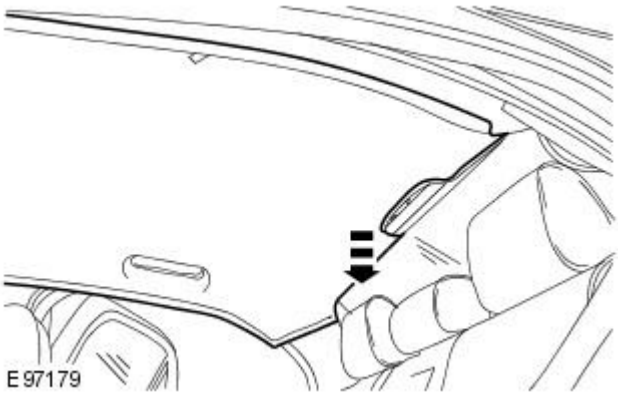

8. NOTE: Some variation in the illustrations may occur, but the essential information is always correct.

Detach the rear of the headliner.

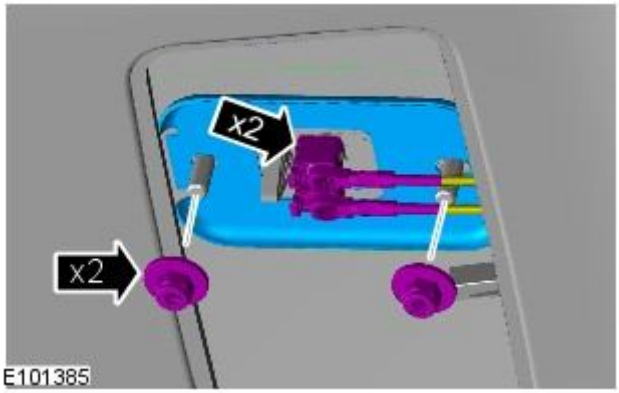

9. CAUTION: Make sure that the latch is pressed before disconnecting the electrical connector.

• NOTE: Some variation in the illustrations may occur, but the essential information is always correct.

Release the global positioning sensor (GPS) antenna.

- Disconnect the 2 electrical connectors.
- Remove the 2 nuts.

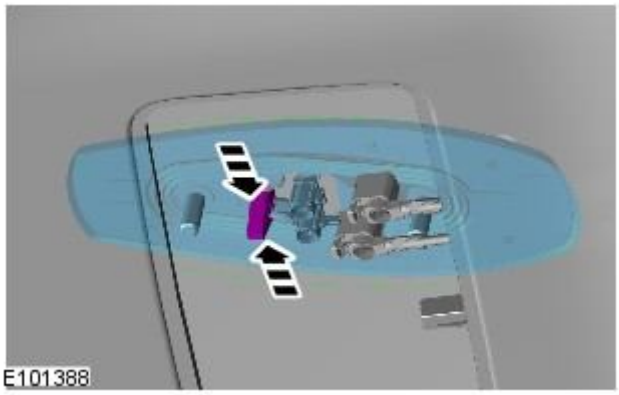

10. NOTE: Some variation in the illustrations may occur, but the essential information is always correct.

Remove the GPS antenna.

- Release the retaining clip.

Installation

1. To install, reverse the removal procedure.

- Tighten to 6 Nm.

Navigation System - Navigation System AntennaWagon

Removal and Installation

Removal

1. Remove the rear spoiler
   For additional information, refer to: Rear Spoiler - Wagon (501-08 Exterior Trim and Ornamentation, Removal and Installation).
2. Detach the electrical connector.

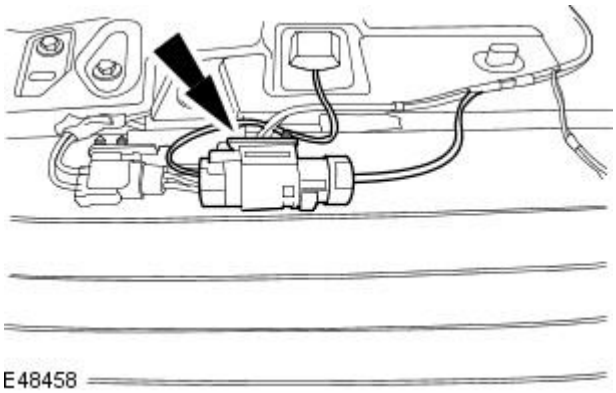

3. Disconnect the electrical connector.

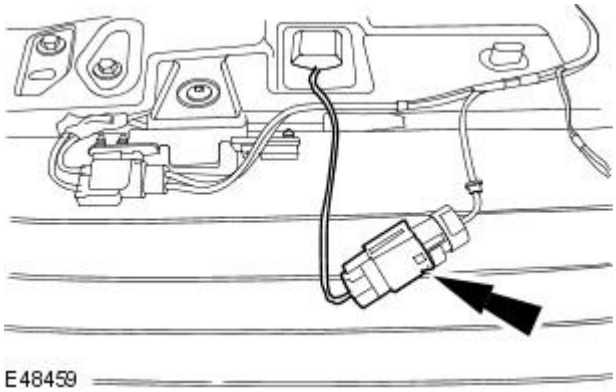

4. Remove the navigation system antenna.

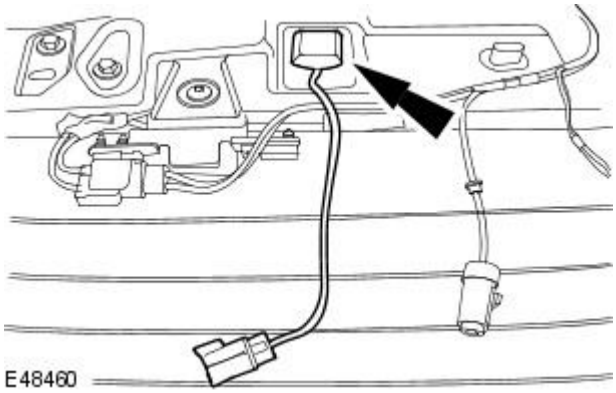

Installation

1. To install, reverse the removal procedure.

Navigation System - Navigation System Display Module

Removal and Installation

Removal

Vehicles with automatic transmission

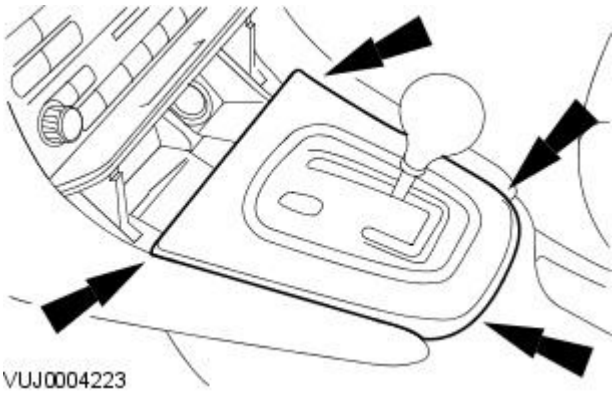

1. NOTE: To aid removal of the navigation module and audio unit place the J-gate in the 'D' position.

Remove the J-gate surround.

Vehicles with manual transmission

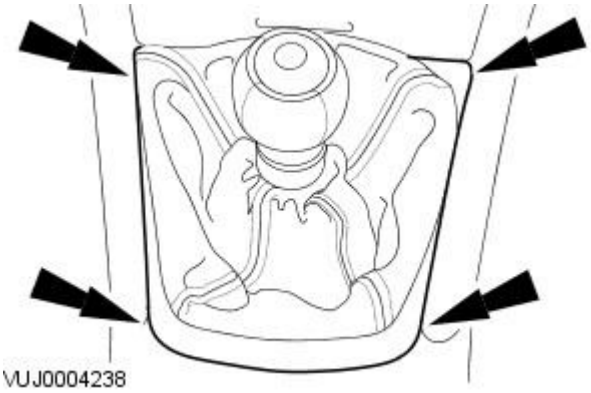

2. Detach the gear selector surround.

All vehicles

3. Disconnect the battery ground cable. For additional information, refer to Section 414-01 Battery, Mounting and Cables.

4. Remove the ashtray retaining screws.

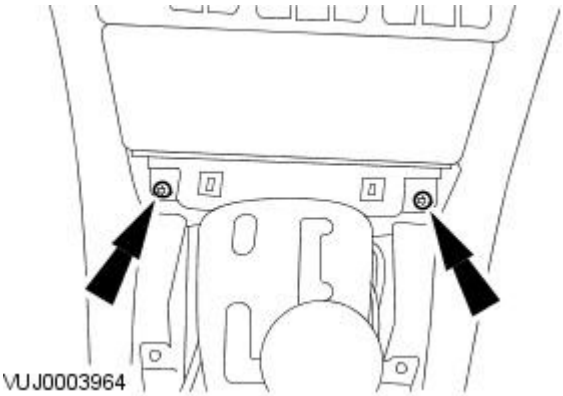

5. Remove the ashtray

- Disconnect the electrical connectors.
- Remove the ashtray.

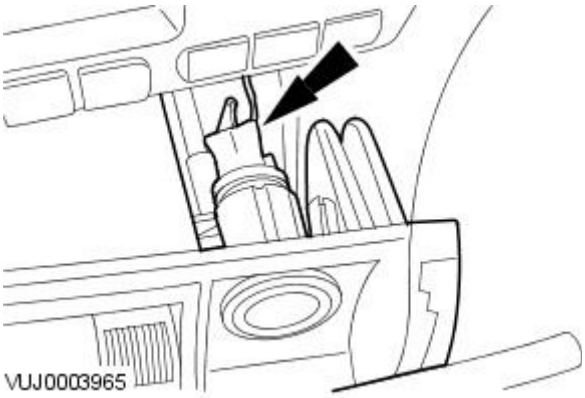

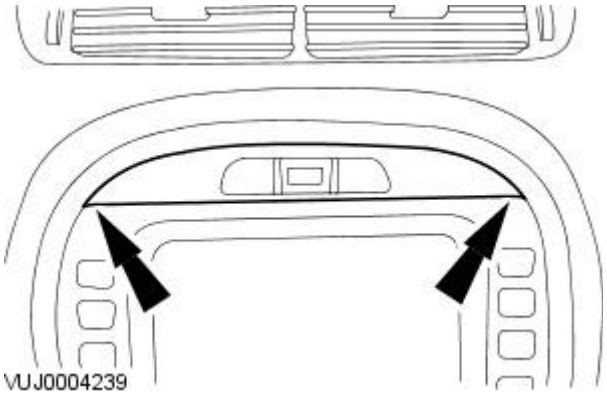

6. Remove the switch pack trim cover.

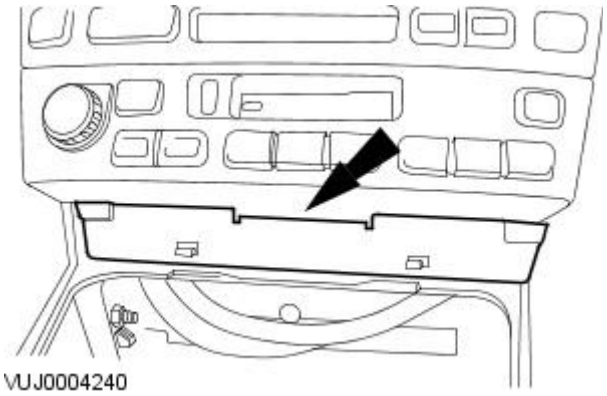

7. Remove the retaining screw cover plate.

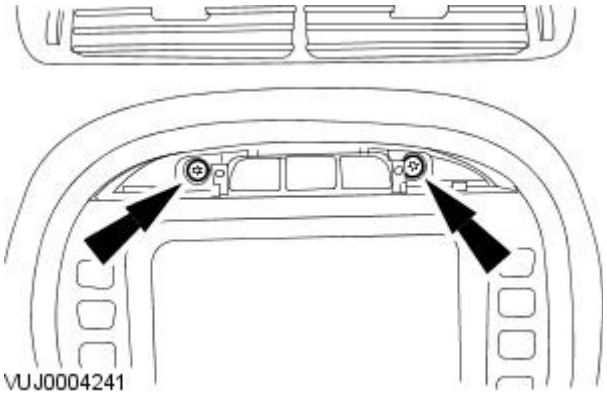

8. Remove the display mounting bracket upper retaining screws.

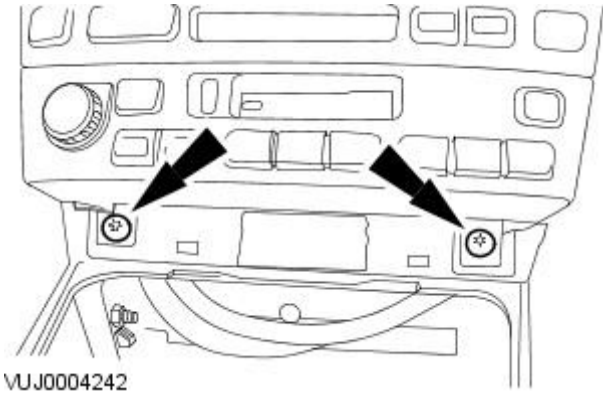

9. Remove the display mounting bracket lower retaining screws.

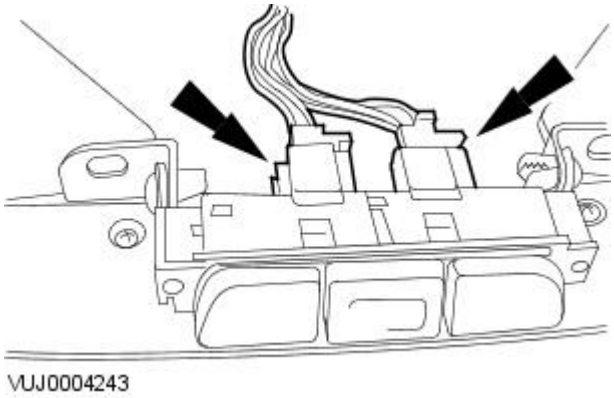

10. Disconnect the electrical connectors.

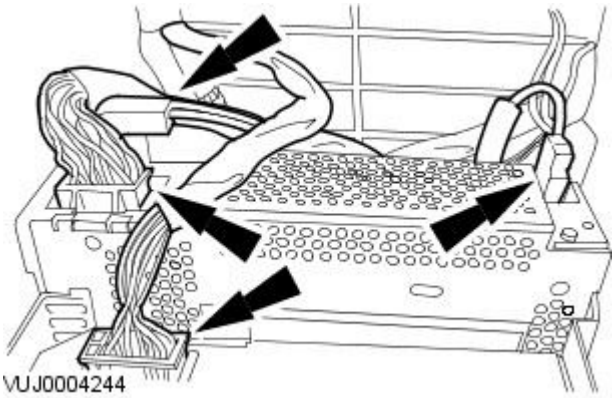

11. Remove the display module and audio unit.

1. Disconnect the electrical connectors and the fibre optic connector.
2. Remove the display module and audio unit.

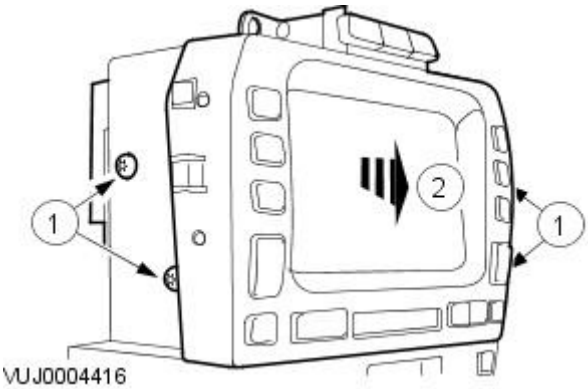

12. Remove the navigation system display module.

1. Remove the navigation system display retaining screws.
2. Remove the navigation system display module.

Installation

1. To install, reverse the removal procedure.

Navigation System - Navigation System Module4-Door

Removal and Installation

Removal

1. NOTE: Make sure the navigation DVD has been removed and the ICE pin code is available before disconnecting the battery ground cable.

Disconnect the battery ground cable.
For additional information, refer to: Battery Disconnect and Connect (414-01 Battery, Mounting and Cables, General Procedures).

2. Remove the luggage compartment front floor carpet.

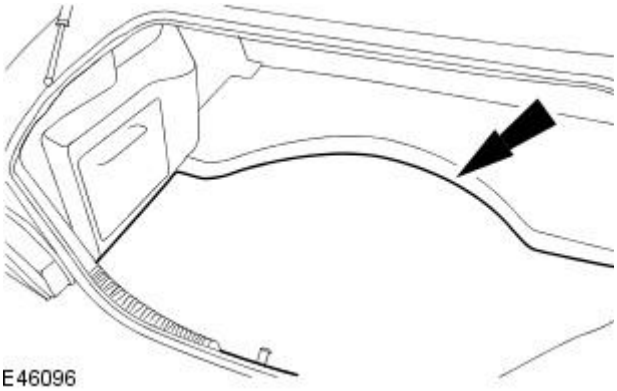

E46096

3. Remove the luggage compartment rear floor carpet.

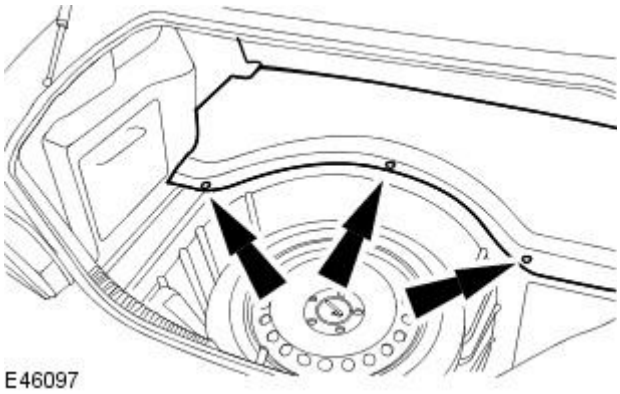

E46097

4. Remove the luggage compartment interior trim.

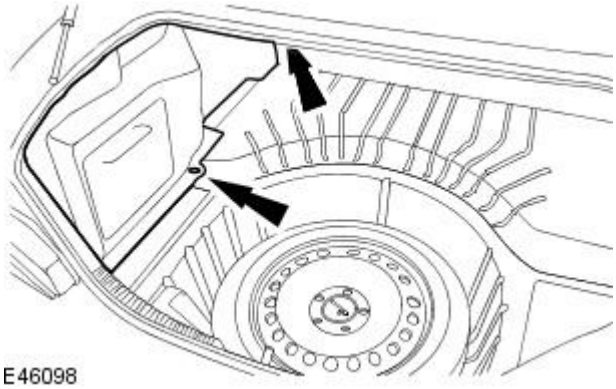

E46098

5. Disconnect the audio unit amplifier electrical connectors.

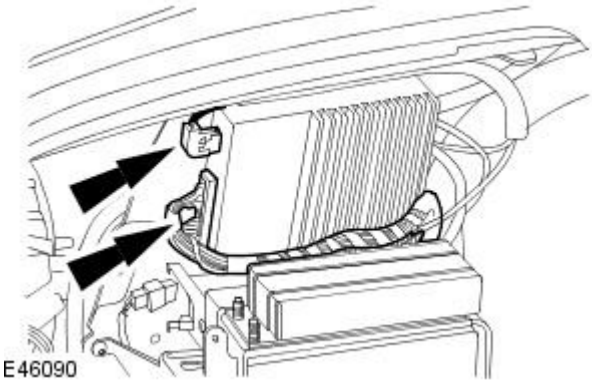

E46090

6. Remove the audio unit amplifier.

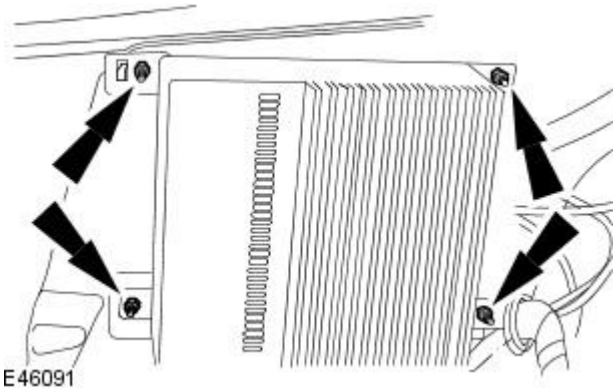
E46091

7. Detach the module retaining bracket.

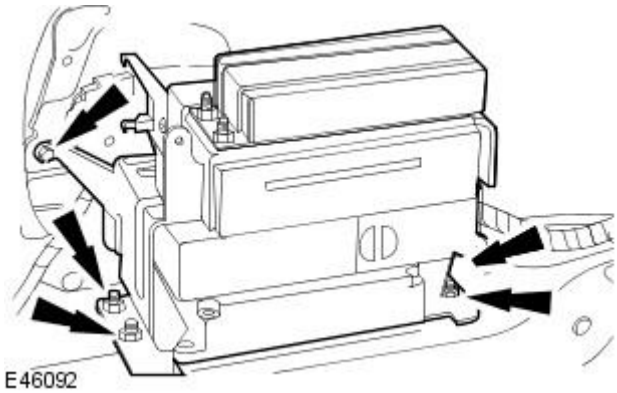
E46092

8. Disconnect the electrical connectors.

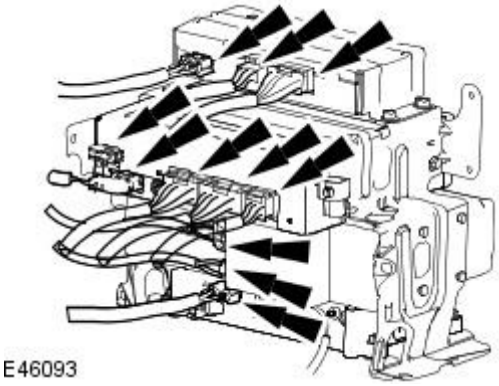
E46093

9. Remove the navigation module retaining bolts.

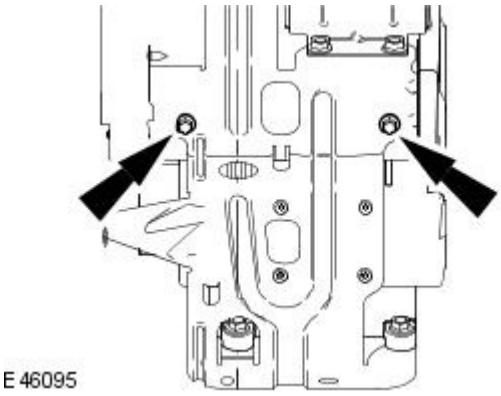
E46095

10. Remove the navigation module.

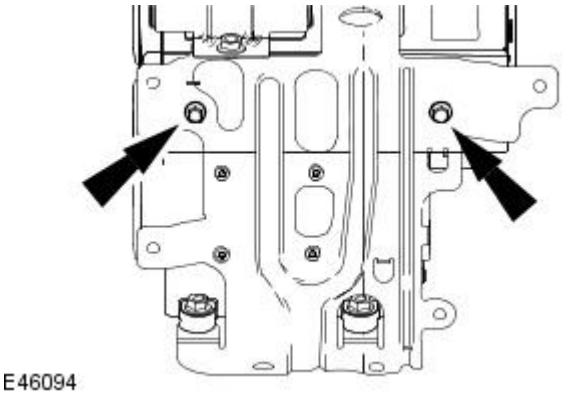
E46094

Installation

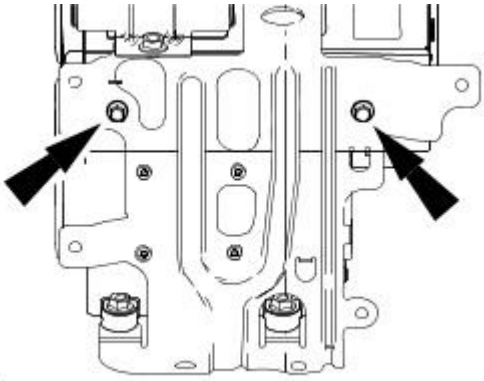
E46094

1. To install, reverse the removal procedure.
   - Tighten to 3 Nm.

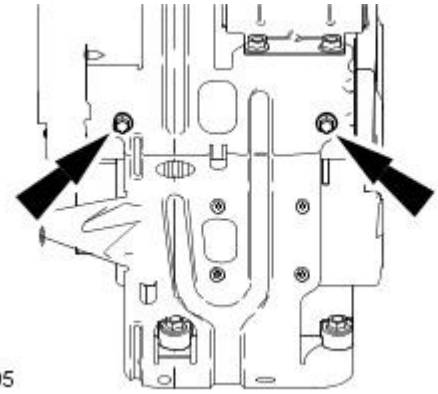
E46095

2. Tighten to 3 Nm.

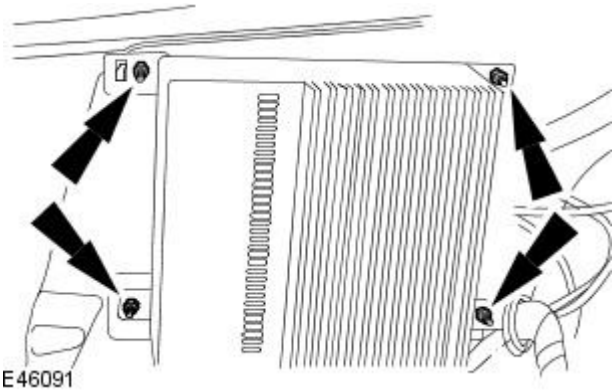
E46091

3. Tighten to 9 Nm.

4. Connect the battery ground cable.
   For additional information, refer to: Battery Connect (414-01 Battery, Mounting and Cables, General Procedures).

Navigation System - Navigation System ModuleWagon

Removal and Installation

Removal

1. NOTE: Make sure the navigation DVD disc has been removed and the audio unit pin code is available before disconnecting the battery ground cable.

Disconnect the battery ground cable
For additional information, refer to: Battery Disconnect and Connect (414-01 Battery, Mounting and Cables, General Procedures).

2. Raise the loadspace floor covering.

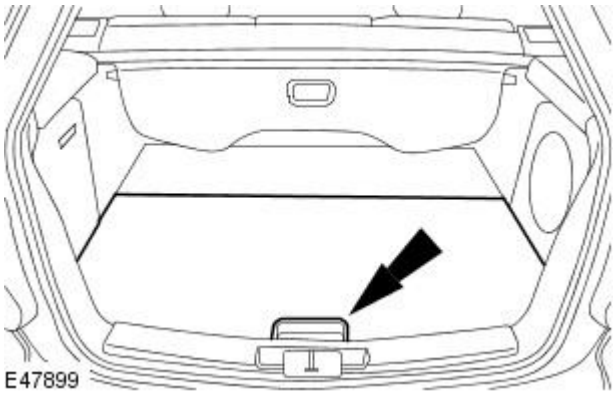

3. Remove the loadspace floor covering.

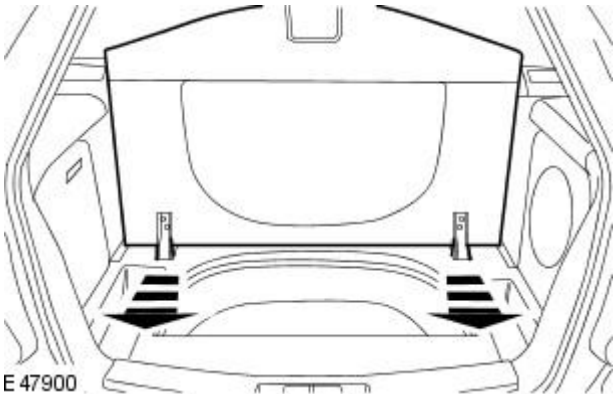

4. Remove the centre loadspace stowage compartment.

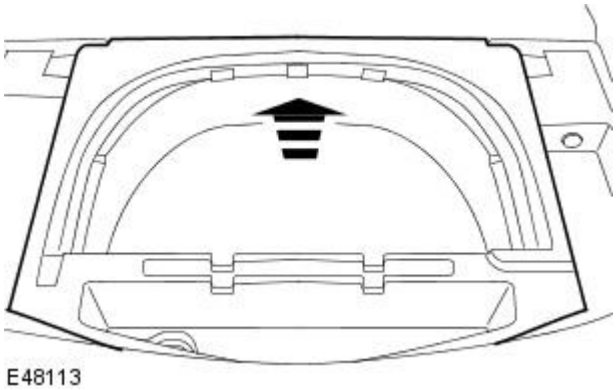

5. Remove the loadspace stowage compartment trim panel.

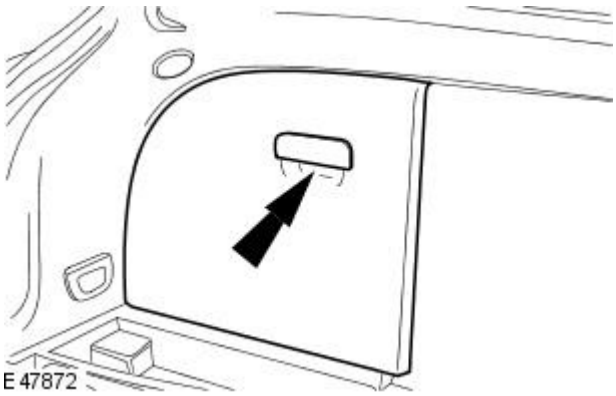

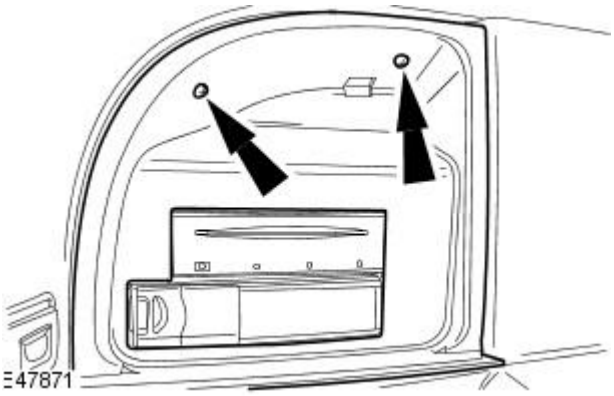

6. Remove the loadspace stowage compartment.

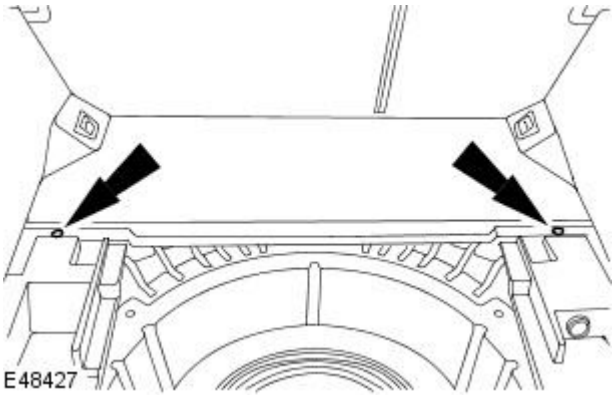

7. Remove the loadspace floor covering retaining screws.

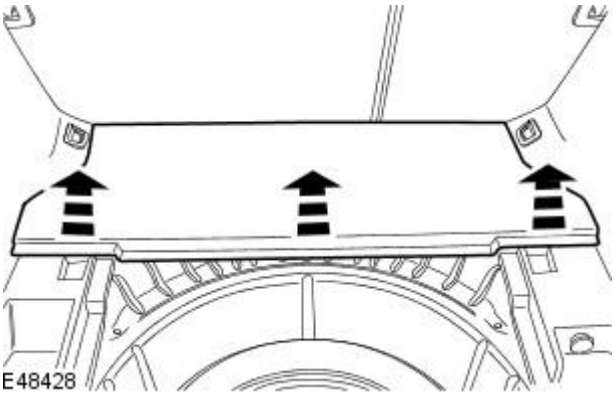

8. Detach the loadspace floor covering upwards.

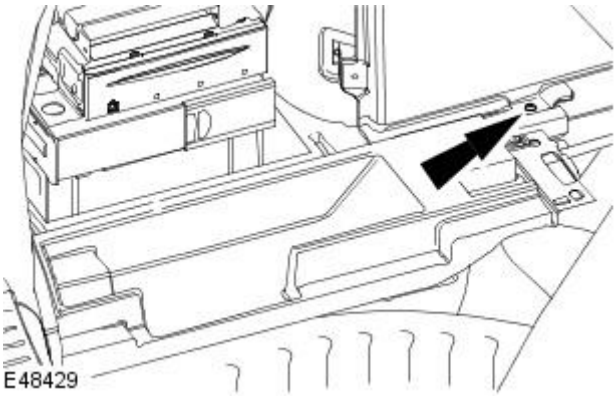

9. Remove the left-hand loadspace stowage compartment retaining screw.

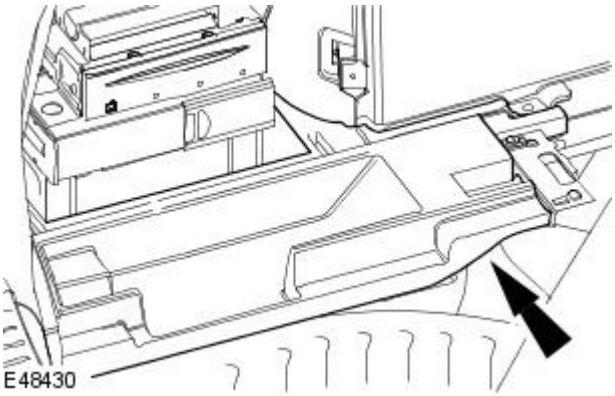

10. Remove the left-hand loadspace stowage compartment.

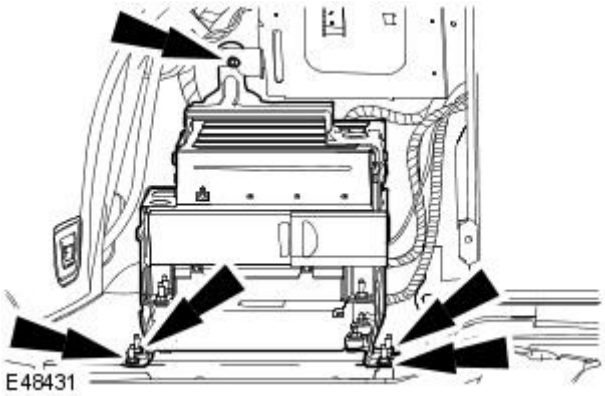

11. Detach the module retaining bracket.

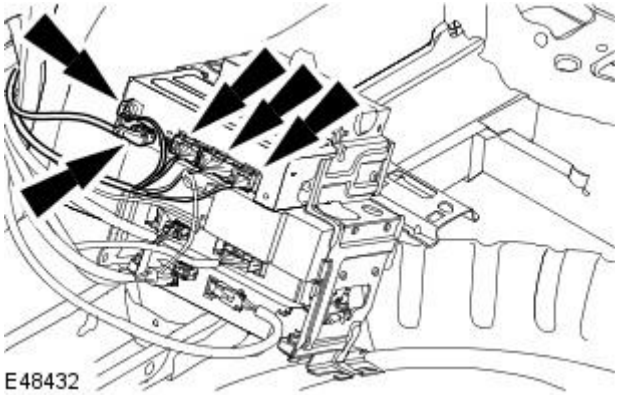

12. Disconnect the navigation system module electrical connectors.

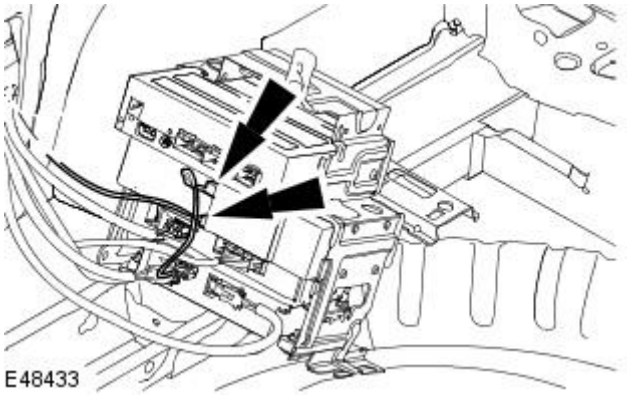

13. Disconnect the compact disc (CD) changer electrical connectors.

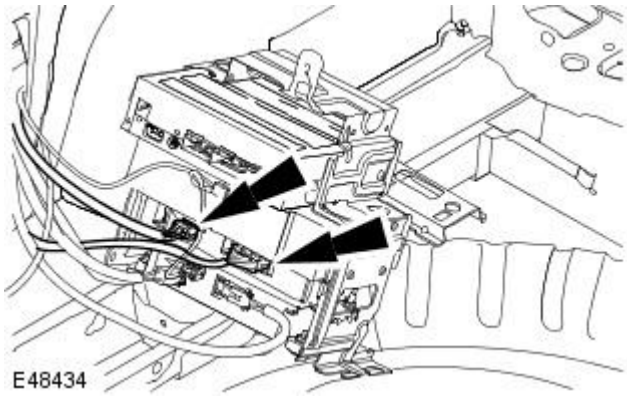

14. Disconnect the voice activated control module (VACM) electrical connectors.

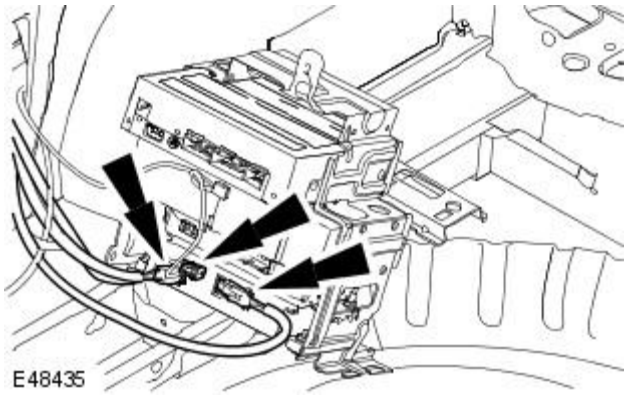

15. Disconnect the cellular phone module electrical connectors.

16. Remove the navigation system module retaining bolts.

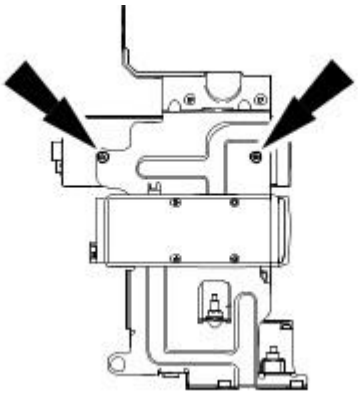

E48450

17. Remove the system navigation module.

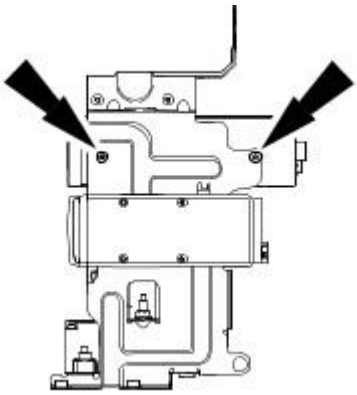

E48451

Installation

1. To install, reverse the removal procedure.

- Tighten to 3 Nm.

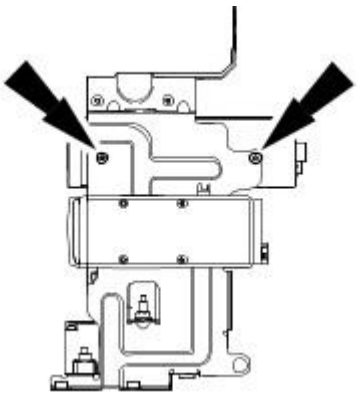

E48451

2. Tighten to 3 Nm.

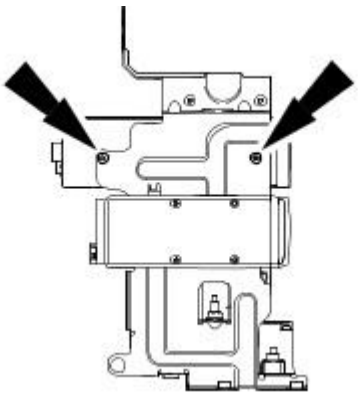

E48450

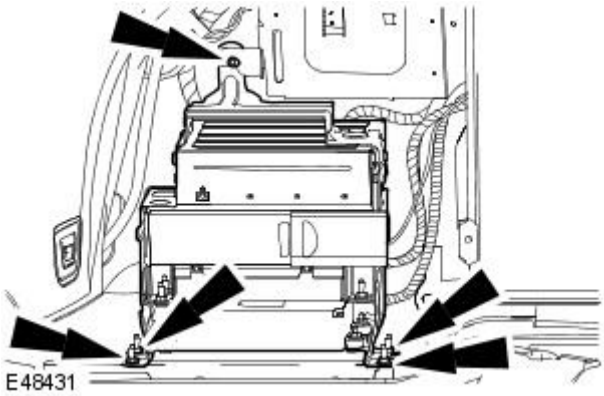

3. Tighten the module retaining bracket upper and lower fixings.

- Tighten the lower retaining nuts to 4 Nm.
- Tighten the upper retaining bolt to 9 Nm.

4. Connect the battery ground cable
For additional information, refer to: Battery Connect (414-01 Battery, Mounting and Cables, General Procedures).

Published: 11-May-2011

Cellular Phone -

Torque Specifications

Description	Nm	lb-ft	lb-in
Cellular phone module	5	-	44

Cellular Phone - Cellular Phone

Description and Operation

CELLULAR PHONE - UP TO 2006MY

The portable cellular phone system consists of:

- Cellular phone handset (GSM).
- Cradle (GSM).
- Cellular portable (US Only).
- Handset battery (US Only).
- Hang up cup (US Only).
- Roof console mounted microphone.
- Steering wheel switch controls.
- Portable support electronics (PSE) module (US Only).
- Transceiver (GSM).
- In-bumper cellular phone antenna.
- Antenna cable.
- Audio unit controls.

The cellular phone handset is located within the floor console armrest. The audio control unit and the steering wheel controls are utilized to operate the system.

The vehicle utilizes two unique cellular phones systems:

- GSM
- US CDMA/TDMA digital and AMPS analogue systems

The voice activation control module provides the handsfree operation for cellular phone.

To activate the handsfree function:

1. **1.** Switch the ignition to the RUN position. After 4-6 seconds the system will be initialized and "VOICE READY" will be displayed in the message center.
2. **2.** Operate the VOICE/PHONE switch on the steering wheel.
3. **3.** Clearly state the command when "LISTENING" is displayed in the message center.
4. **4.** Operate the VOICE/PHONE switch on the steering wheel or remain silent for 1 second. If speech is detected "PROCESSING" will be displayed in the message center. Operating the VOICE/PHONE switch again will cancel the voice session.

Refer to the Cellular Phone user guide for complete operating instructions.

For additional information on the voice activation control module, refer to
For additional information, refer to: Module Controlled Functions (419-10 Multifunction Electronic Modules, Description and Operation).
.

CELLULAR PHONE - FROM 2006MY - UP TO 2009MY

The system allows the driver to use a Bluetooth™ equipped cellular phone handset through the vehicle's Information and Entertainment system. Bluetooth™ is an international standard that allows electronic components to communicate with each other, using a short-range radio link. Bluetooth eliminates the need for wires or cables: typically, devices can communicate at a range of up to 10 metres (33 feet). Bluetooth™ is a registered trademark of Bluetooth SIG, Inc.

The Bluetooth™ system is as described in the following section for vehicles from 2009MY with the exception that only 1 telephone can be paired with the system and the Bluetooth™ antenna is located in the floor console.

Telephone Voice Control

The vehicle system is able to use any voice tags which are stored in the mobile telephone. There is no voice dialling feature of the cellular telephone system. Voice dialling is accessed via a long press of the voice button on the LH (left-hand) side of the steering wheel. The audio unit displays that Voice Tag dialling is in progress and an audible prompt is generated from the Bluetooth™ phone module. After the prompt the handset waits several seconds for the voice command. Refer to the Owners Handbook for further details on voice operation.

CELLULAR PHONE - FROM 2009MY

The system allows the driver to use a Bluetooth™ equipped cellular phone handset through the vehicles Information and Entertainment system. Bluetooth™ is an international standard that allows electronic components to communicate with each other, using a short-range radio link. Bluetooth eliminates the need for wires or cables: typically, devices can communicate at a range of up to 10 metres (33 feet). Bluetooth™ is a registered trademark of Bluetooth SIG, Inc.

The Bluetooth in-car telephone system allows certain mobile phones to be used hands-free in your vehicle: there is no need to connect the mobile phone to a cradle or cable. The vehicle's Bluetooth telephone system can be used with an appropriate, Bluetooth™ equipped mobile phone. The mobile phone must be paired with the vehicle system before use - Refer to the Owners Handbook for details.

• NOTE: There is no physical connection (cradle) between the phone handset and the telephone control module. Communications between the 2 components are purely Bluetooth™. This can limit the available functions dependant on the handset used.

Once paired, the mobile phone can be operated via the steering wheel switches or the keypad and phone buttons on the audio panel or touch-screen. The mobile phone doesn't need to be physically connected to the vehicle: it can be left in a jacket pocket, for instance. Calls are routed through the vehicle's audio speakers, and a dedicated microphone is fitted in the overhead console, near the driver's head.

The system can be used to answer or reject incoming calls, make outgoing calls or alter the call volume. The system does not support Short Message Service (SMS) text messages. The vehicle starter switch must be set to position I or II in order to use the phone.

The volume of telephone calls can be adjusted for hands-free phone operation. To adjust the volume, operate the audio system's ON/OFF volume control on the steering wheel or audio unit during a phone call. If the audio system is in use when the phone becomes active, the audio system source is suppressed for the duration of the call. The Jaguar telephone system is designed to function with a wide variety of Bluetooth™ equipped mobile phones. The audio and echo characteristics vary between models of mobile phones: as a result, it may take a few seconds for the vehicle system to adapt to provide optimal audio performance. In order to achieve the best possible audio performance,

it may be necessary to reduce the system volume slightly when using certain mobile phones.

Phone related messages are shown on the audio unit panel display or touch-screen when the phone system is active. The Bluetooth™ telephone system can be used in conjunction with the Voice Activation system to provide the driver with completely hands-free communication. Voice commands are picked up by the system microphone.

The cellular phone system comprises the following components:

- Bluetooth™ phone module
- Microphone
- Bluetooth™ antenna.

Phone dialling is achieved using one of the following methods:

- Dialling a number using the audio unit or touch screen
- Selecting a number from the handsets phonebook via the audio unit and the Bluetooth™ phone module
- Selecting from the handsets call register via the Bluetooth™ phone module.

The Bluetooth™ phone module is connected to the Information and Entertainment system on the D2B bus. This allows audio and control signals to be routed to and from the Bluetooth™ phone module. The Bluetooth™ phone module has a separate integral Bluetooth™ antenna located on the LH side of the luggage compartment on wagon vehicles and on the rear parcel shelf on 4 door vehicles.

Telephone handsets must be paired with the Bluetooth™ phone module before they can be used with the vehicle system. Up to 5 telephone handsets can be paired with the vehicle, but only 1 telephone can used at a time. If more than one phone is present in the vehicle, the last connected phone will be given priority on connection. Phone connection is active at ignition on. The phone will be disconnected 6 minutes after the ignition is switched off.

Phonebook and last number redial list are stored & synchronized for each of the 5 phones and are resynchronized when each phone reconnects.

Bluetooth™ Phone Module

E88681

The Bluetooth™ phone module is located in the rear LH side of the luggage compartment. The Bluetooth™ phone module is connected on the D2B ring to the voice control module. The D2B ring allows control instructions and audio to be transferred to the relevant modules.

Microphone

The microphone is located adjacent to the overhead console which surrounds the front interior lamp. The microphone is hardwired to the voice module and the Bluetooth™ phone module.

Telephone Control Switches

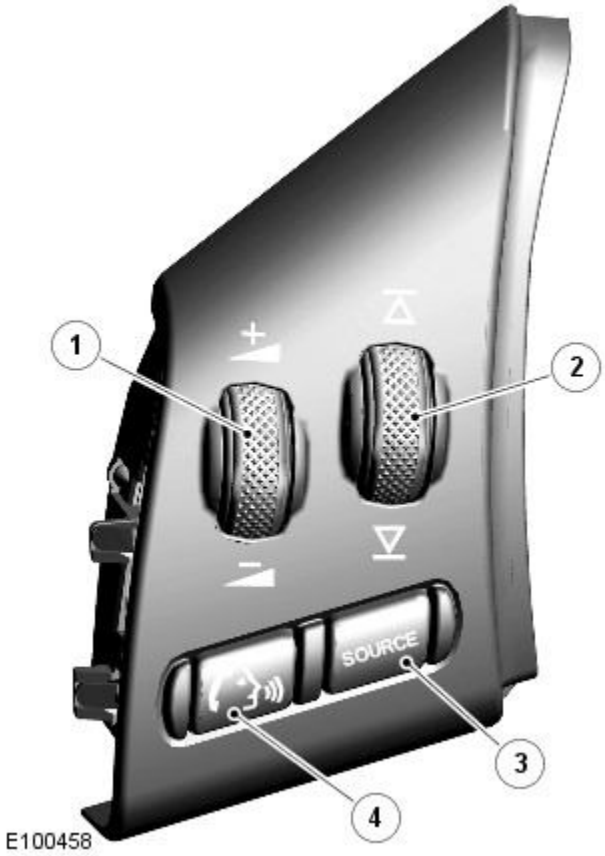

Item	Part Number	Description
1	-	Rotary Volume control
2	-	Rotary control Telephone mode - scroll through stored numbers
3	-	Phone mode select button
4	-	Start voice mode button, answer telephone or send/end in phone mode

The telephone switches are located on the LH side of the steering wheel. Two rotary thumbwheels operate the volume of the selected audio function including the telephone and also allow the driver to scroll through stored telephone numbers when in phone mode or select radio stations or CD's when in audio modes. The 'source' switch allows the driver to select phone mode by pressing the switch for 2 seconds. The switch can also be used to cycle through the AM, FM radio stations and CD's in the auto changer. The voice button will allow the start of the voice function or mute when voice system is not fitted and also answer a call when phone ringing and also send/end when in a phone call.

Bluetooth™ Antenna

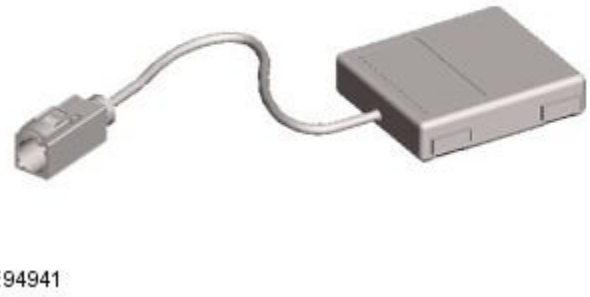

The Bluetooth™ antenna is located on the LH side of the luggage compartment on wagon vehicles and on the rear parcel shelf on 4 door vehicles. The antenna is used to connect the Bluetooth™ phone module to a Bluetooth™ compatible phone.

Telephone Voice Control

The vehicle system is able to use any voice tags which are stored in the Jaguar Voice system. There is no voice dialling feature of the cellular telephone system. Voice dialling is accessed via a short press of the voice button on the LH side of the steering wheel. Refer to the Owners Handbook for further details on voice operation.

Cellular Phone - Cellular Phone

Diagnosis and Testing

Principle of Operation

For a detailed description of the phone system, refer to the relevant Description and Operation sections in the workshop manual. REFER to: Cellular Phone (419-08 Cellular Phone, Description and Operation).

Inspection and Verification

Where a fault involving the cellular phone is indicated by the Jaguar Approved Diagnostic System, some basic diagnostic methods may be necessary to confirm that connections are good and that the wiring is not damaged, before installing new components.

1. **1.** Verify the customer concern by operating the portable cellular phone both in portable mode and while connected to the vehicle.
2. **2.** Make sure the portable convertible phone (US Only) is switched ON. With the power button ON, the system should be on while the ignition switch is in ACC or RUN.
3. **3.** Make sure the customer is calling within the coverage area. No Svc will appear in the display if the customer is calling from outside the coverage area.
4. **4.** Check to see if the Roam indicator is on. If so, follow the roaming instructions in the Cellular Phone User Guide.
5. **5.** Check to see if the display reads Locked CDMA/TDMA or pin for GSM. If so, press Clr and enter the customer three-digit unlock code for CDMA/TDMA or the customer pin number on the phone handset for GSM.
6. **6.** Make sure the portable cellular phone (US Only) is securely seated in the holder.
7. **7.** Make sure the GSM handset coil cord connector is correctly fitted to the armrest connector.
8. **8.** Check the portable cellular phone (US Only) antenna connections.
9. **9.** Check the portable cellular phone system registration (US Only). Also, check to make sure that the portable cellular phone is correctly programmed. Incorrect programming can result in single system scanning, loss of speed dialing, loss of hands-free audio, loss of auto redial, loss of dial tone multi-frequency tones, and the loss of other keypad/portable cellular phone functions.
10. **10.** Make sure that a valid SIM card is inserted in the handset SIM card reader (GSM Only)
11. **11.** Check the customer account status with the cellular carrier.

If the customer concern is still present, follow these steps to diagnose the concern:

12. **12.** Visually inspect for obvious signs of mechanical or electrical damage:

Visual Inspection Chart

Mechanical	Electrical
• Portable cellular phone (US only) • Microphone • Portable cellular phone holder (US only) • Coil cord	• Electrical connectors • Wiring harness for damage or corrosion • Fuses

System/Carrier Concerns - All Systems

Dropped calls, bad connections, noisy audio and other intermittent symptoms usually indicate a system or cellular carrier concern, and are not the fault of the phone itself. Such symptoms may occur in situations such as the following:

- In certain geographic areas (for example: areas of excessive foliage or hills) or at the edge of coverage areas.
- At the same place each day.
- At the same time each day.
- Under bridges, tunnels, in lower freeways, or in congested downtown areas.

If the customer phone exhibits any of the above symptoms or symptoms occur under the above conditions, the customer or the dealer should contact customer assistance at their particular cellular provider/carrier or call the assistance number provided in the Jaguar Cellular System Dealer kit.

Other Possible Concerns - All Systems

1. **1.** If, for some reason, the customer's electronic serial number was incorrectly recorded in the carrier switch, the phone will not work. Call the assistance number provided in the Jaguar Cellular System Dealer kit to check the electronic serial number CDMA/TDMA only.
2. **2.** A customer initial call must be made in his/her home coverage area for correct activation of the Jaguar Cellular System.
3. **3.** A customer may have to wait until after 24 hours of the coverage activation before making a call from outside of his/her home coverage area or the phone might be reported stolen and coverage stopped.
4. **4.** There may be a slight delay in activation after leaving the dealership from initial delivery.

If, after checking these possibilities, the phone still does not function, do not attempt to repair the phone. Call the cellular phone distributor.

DTC Index

CAUTION: When probing connectors to take measurements in the course of the pinpoint tests, use the adapter kit, part number 3548-1358-00

• NOTE: If the control module/component is suspect and the vehicle remains under manufacturer warranty, refer to the Warranty policy and procedures manual (section B1.2), or determine if any prior approval program is in operation, prior to the installation of a new module or component

• NOTE: When performing voltage or resistance tests, always use a digital multimeter (DMM) accurate to three decimal places and with a current calibration certificate. When testing resistance, always take the resistance of the DMM leads into account.

• NOTE: Check and rectify basic faults before beginning diagnostic routines that involve pinpoint tests

• NOTE: Inspect connectors for signs of water ingress, and pins for damage and/or corrosion

• NOTE: If DTCs are recorded and, after performing the pinpoint tests, a fault is not present, an intermittent concern may be the cause. Always check for loose connections and corroded terminals.

DTC	Description	Possible Source	Action
B1038	Microphone input circuit - short to ground	• Microphone fault • Wiring harness fault	Refer to appropriate circuit diagram, check microphone input circuits for short to ground. Repair circuit faults using appropriate materials and methods. Clear DTC, retest system to verify correct operation.
B1039	Microphone input circuit - short to battery	• Microphone fault • Wiring harness fault	Refer to appropriate circuit diagram, check microphone input circuits for short to battery. Repair circuit faults using appropriate materials and methods. Clear DTC, retest system to verify correct operation.
B1342	ECU is defective	• Internal ECU fault	This DTC also includes memory failure. Replace telephone ECU and clear DTC. retest system to verify correct operation.
B1893	GPS antenna open circuit	• GPS Antenna • Wiring harness fault	Check Antenna circuit for open circuits, repair wiring faults using approved methods and materials, clear DTC and retest to confirm correct operation.
B2102	Antenna circuit short to ground	• GPS Antenna • Wiring harness fault	Check Antenna circuit for short circuits, repair wiring faults using approved methods and materials, clear DTC and retest to confirm correct operation.
B2103	Antenna not connected	• GSM or Bluetooth Antenna • Wiring harness fault	Check GSM and Bluetooth antenna circuits for open circuits, repair wiring faults using approved methods and materials, clear DTC and retest to confirm correct operation.
B2141	NVM configuration failure	• No phone number • invalid phone number	Software error or SIM card error, confirm SIM is valid and download new software to phone module. Clear DTC and retest system to confirm operation.
B2477	Module configuration failure	• Configuration fault	No vehicle identification number present, configure vehicle. Clear DTC and recheck system to confirm correct operation.
B2633	Microphone not connected	• Microphone • Wiring harness fault	Check microphone is connected correctly, Check microphone lines for open circuits. install connectors correctly or repair wiring harness using appropriate methods and materials.
B2636	SOS switch input short circuit to ground	• SOS switch • Wiring harness fault	Check SOS switch is not stuck. Check SOS switch input line for short circuit to ground. Repair wiring harness faults using appropriate methods and materials. Replace SOS switch as required. Clear DTC and retest system for correct operation.
B2637	Information switch input short to ground	• Information switch • Wiring harness fault	Check information switch for faults, check wiring harness for information switch circuits shorted to ground. Repair wiring harness faults using approved methods and materials. Clear DTC and retest system for correct operation.
B2638	Phone rechargeable battery fault	• Phone battery faulty • Wiring harness fault	Check if the phone battery is correct for the phone in use. Confirm battery charging connections are in good condition and are connected to the power supply.
B2640	Deployment indication input short to ground	• Wiring harness	Check wiring harness for airbag deployment indication circuit short to ground. Repair wiring fault using approved methods and materials. Clear DTC and retest system to confirm correct operation.
B2641	Deployment indication input short to battery	• Wiring harness	Check wiring harness for airbag deployment indication circuit short to power. Repair wiring fault using approved methods and materials. Clear DTC and retest system to confirm correct operation.
B2904	Partial mute circuit failure	• Wiring harness	Check mute circuits from phone ECU to radio head unit and nav system ECUs are not short to ground. Repair wiring harness using approved methods and materials
U2601	D2B wake up short to ground	• Wiring harness	Check D2B wake up circuit for short to ground. Repair Wiring harness using approved materials and methods. Clear DTC and retest to confirm correct operation.
U2609	D2B wake up pulse width out of specification	• Module software issue	D2B pulse width specification is <50mS - >110mS, if the pulse width is outside this range check the module configuration and programming. Reconfigure and reprogramme module, clear DTC and retest system to confirm correct operation.
U2610	D2B Slave ECU fails to receive a report position	• D2B network concern	During initialisation no position status report is received, check D2B network for open circuits, shorts. Repair wiring harness using approved methods and materials. Clear DTC and retest system to ensure correct operation.
U2611	D2B Slave ECU fails to receive an alarm clear command	• D2B network concern	On entering alarm state, slave ECU has fail to receive alarm clear command, check D2B network for open circuits, shorts. Repair wiring harness using approved methods and materials. Clear DTC and retest system to ensure correct operation.

Cellular Phone - Cellular PhoneVehicles With: Bluetooth

Diagnosis and Testing

Overview

This section covers the components of the Bluetooth cellular phone system.

For information on the description and operation of the Bluetooth cellular phone system :
REFER to: Cellular Phone - VIN Range: N52048->N99999 (419-08 Cellular Phone, Description and Operation).

For additional information on the Bluetooth cellular phone system : REFER to owner information - Bluetooth telephone system handbook.

Inspection and Verification

• NOTE: **Only cellular phones and software versions featured in the Jaguar Bluetooth approved phones and software list can be guaranteed to operate correctly.**

Check the D2B ring order and circuit integrity.

Before pairing a handset to the Bluetooth phone system make sure that the handbook for the specific handset is available.

1. **1.** Verify the customer concern by operating the system using the customers cellular phone.
2. **2.** Visually inspect for obvious signs of electrical damage.

Visual Inspection Chart

Electrical
• Fuse(s) • Wiring harness • Electrical connector(s) • Bluetooth cellular phone • Microphone • Steering wheel control • Bluetooth upgrade module • Portable support electronics (PSE) module • Voice module

3. **3.** If an obvious cause for an observed or reported concern is found, correct the cause (if possible) before proceeding to the next step.
4. **4.** Use the approved diagnostic system or a scan tool to retrieve any DTCs before moving onto the symptom chart.
   - Make sure that all DTCs are cleared following rectification.

Symptom Chart

Symptom	Action
"NO PHONE FITTED" (touch-screen) message displayed continuously or "NO PHONE" message displayed every time the phone mode button is pressed	GO to Pinpoint Test A.
"HANDSET IN USE" (touch-screen) message displayed for more than 2 minutes, or "HANDSET" message displayed every time the phone mode button is pressed and never changes to "SIG*"	GO to Pinpoint Test B.
Unable to pair the handset to telephone system	GO to Pinpoint Test C.
"PHONE OFF" message displayed (touch-screen only)	GO to Pinpoint Test D.
Cannot answer/reject/end call from the audio head unit/touch screen/steering wheel control	GO to Pinpoint Test E.
Unable to connect the handset to telephone system	GO to Pinpoint Test F.
Bluetooth connection is dropped	GO to Pinpoint Test G.
Incorrect or no phonebook entries	GO to Pinpoint Test H.
No third party audio	GO to Pinpoint Test I.
No in-vehicle audio	GO to Pinpoint Test J.
No ringing heard through the vehicle speakers	GO to Pinpoint Test K.
Low audio volume	GO to Pinpoint Test L.
Cannot dial out from audio head unit/touch-screen/steering wheel control	GO to Pinpoint Test M.
Voice activated phone functions inoperative	GO to Pinpoint Test N.
Call is dropped	GO to Pinpoint Test O.
Interference and distortion	GO to Pinpoint Test P.
Unable to transfer call between hands free and handset	GO to Pinpoint Test Q.

Pinpoint Tests

• NOTE: When performing voltage or resistance tests, always use a digital multimeter (DMM) accurate to three decimal places, and with an up-to-date calibration certificate. When testing resistance always take the resistance of the DMM leads into account.

• NOTE: Inspect connectors for signs of water ingress, and pins for damage and/or corrosion.

• NOTE: If a control module or component is suspect and the vehicle remains under manufacturer warranty, refer to the Warranty Policy and Procedures manual (section B1.2), or determine if any prior approval program is in operation, before the replacement of a component.

PINPOINT TEST A : "NO PHONE FITTED" (TOUCH-SCREEN) MESSAGE DISPLAYED CONTINUOUSLY OR "NO PHONE" MESSAGE DISPLAYED EVERY TIME THE PHONE MODE BUTTON IS PRESSED	
TEST CONDITIONS	**DETAILS/RESULTS/ACTIONS**
A1:	
	1
	Is the car a USA/Mexico/Canada car? **Yes** GO to A3. **No** GO to A2.
A2:	
	1
	Is the VIN of the car post VIN break for Bluetooth? (Refer to Technical Helpline for VIN break information). **Yes** GO to A3. **No** The Bluetooth system cannot be retrofitted to rest of world cars pre-VIN break or to those cars not fitted with the Bluetooth pre-wire due to a harness architecture change.
A3:	
	1
	Has the correct harness been fitted to the car? **Yes** GO to A4. **No** The Bluetooth system cannot be retrofitted to rest of world cars pre-VIN break or to those cars not fitted with the Bluetooth pre-wire due to a harness architecture change. (Refer to Technical Helpline for VIN break and pre-wire information).
A4:	
	1
	Does the display ever return to the main phone screen or ever display "PHONE"? **Yes** GO to A6. **No** GO to A5.
A5:	
	1
	Check the part number of the portable support electronics (PSE) module. Has the correct part been fitted? **Yes** Check power, ignition and ground circuits/connections at the PSE module.GO to A7. **No** Refer to the warranty policy and procedures manual if the PSE module is suspect.
A6:	
	1
	Are any of the D2B connections loose or damaged? **Yes** Reconnect/change/repair the D2B leads and check for normal operation. **No** GO to A7.
A7:	
	1
	Are power, ignition and ground being supplied to the portable support electronics (PSE) module? **Yes** Refer to the warranty policy and procedures manual if the PSE module is suspect. **No** Rectify as necessary. Refer to the electrical guides.

PINPOINT TEST B : "HANDSET IN USE" (TOUCH-SCREEN) MESSAGE DISPLAYED FOR MORE THAN 2 MINUTES OR "HANDSET" MESSAGE DISPLAYED EVERY TIME THE PHONE MODE BUTTON IS PRESSED AND NEVER CHANGES TO "SIG*"	
TEST CONDITIONS	**DETAILS/RESULTS/ACTIONS**
B1:	
	1
	Has the system been paired to a handset? **Yes** Key off ignition and wait 6 minutes for the portable support electronics (PSE) module to shut down. The Bluetooth upgrade module remains active for 6 minutes after the ignition has been switched off. It is important to wait this 6 minutes so that a clean boot-up of the Bluetooth upgrade module is achieved and the correct information is stored. Switch off the paired handset; remove the battery from the back of the handset. Replace the battery into the handset and switch on, make sure the Bluetooth function is on and the handset is within range. Key on ignition. GO to B2. **No** GO to B3.
B2:	
	1
	Does the system still display "HANDSET IN USE" (touch-screen) message displayed for more than 2 minutes, or "HANDSET" message displayed every time the phone mode button is pressed and then drops out of phone mode? **Yes** GO to B3. **No** Problem may have been due to the Bluetooth link being disconnected.
B3:	

	1
	Is the connection between the Bluetooth upgrade module and the phone harness loose? **Yes** Reconnect the Bluetooth upgrade module and check for normal operation. **No** GO to B5.
B4:	
	1
	Are any of the Bluetooth upgrade module pins damaged? **Yes** Refer to the warranty policy and procedures manual if the Bluetooth upgrade module is suspect. **No** Check harness to/from the Bluetooth upgrade module and the portable support electronics (PSE) module.GO to B5.
B5:	
	1
	Is power being supplied to the Bluetooth upgrade module? **Yes** Refer to the warranty policy and procedures manual if the Bluetooth upgrade module is suspect. **No** GO to B6.
B6:	
	1
	Are power, ignition, and ground being supplied to the portable support electronics (PSE) module? **Yes** Refer to the warranty policy and procedures manual if the PSE module is suspect. **No** Rectify as necessary. Refer to the electrical guides.

PINPOINT TEST C : - UNABLE TO PAIR THE HANDSET TO TELEPHONE SYSTEM	
TEST CONDITIONS	**DETAILS/RESULTS/ACTIONS**
C1:	
	1
	Has another handset previously been paired to the system? **Yes** GO to C2. **No** GO to C3.
C2:	
	1
	Is the "HANDSET IN USE" (touch-screen) or "HANDSET" message displayed, or does the system drop out of phone mode? **Yes** Go to'"HANDSET IN USE" or "HANDSET"' message displayed - GO to Pinpoint Test B. **No** GO to C3.
C3:	
	1
	Does the touch-screen display "Discover Me" with 4 or 5 bars (The 5th bar will flash slowly) or does the audio head unit display "SIG****" or "SIG*****" (The 5th '*' will flash slowly)? **Yes** Retry the pairing process following the 'quick guide information' for the specific handset.GO to C4. **No** Enter the ##3#*# pairing key sequence.GO to C5.
C4:	
	1
	Has the handset paired with the system successfully? ("Phone connected" displayed (touch screen) or "SIG*" displayed (audio head unit display))? **Yes** Problem may have been due to a faulty Bluetooth connection. **No** Key off ignition and wait 6 minutes for the portable support electronics (PSE) module to shut down. The Bluetooth upgrade module remains active for 6 minutes after the ignition has been switched off. It is important to wait this 6 minutes so that a clean boot-up of the Bluetooth upgrade module is achieved and the correct information is stored. Switch off the paired handset; remove the battery from the back of the handset. Replace the battery into the handset and switch on, make sure the Bluetooth function is on and the handset is within range. Key on ignition. GO to C7.
C5:	
	1
	Does the touch-screen display "Discover Me" with 4 or 5 bars (The 5th bar will flash slowly) or does the audio head unit display "SIG****" or "SIG*****" (The 5th '*' will flash slowly)? **Yes** Retry the pairing process following the 'quick guide information' for the specific handset. **No** Key off ignition and wait 6 minutes for the portable support electronics (PSE) module to shut down. Key on ignition. GO to C6.
C6:	
	1
	Does the touch-screen display "Discover Me" with 4 or 5 bars (The 5th bar will flash slowly) or does the audio head unit display "SIG****" or "SIG*****" (The 5th '*' will flash slowly)? **Yes** Retry the pairing process following the 'quick guide information' for the specific handset. **No** GO to C9.
C7:	
	1

	Has the handset paired with the system successfully ("Phone connected" displayed (touch screen) or "SIG*" displayed (audio head unit display))? **Yes** Problem may have been due to a faulty Bluetooth connection. **No** Pair and connect a different known 'good' handset to the vehicle phone system. GO to C8.
C8:	
	1
	Has the handset paired with the system successfully ("Phone connected" displayed (touch screen) or "SIG*" displayed (audio head unit display))? **Yes** Problem may be an issue with the user's handset, consult the handset supplier. **No** GO to C9.
C9:	
	1
	Is the connection between the Bluetooth upgrade module and the phone harness loose? **Yes** Reconnect the Bluetooth upgrade module and check for normal operation. **No** GO to C10.
C10:	
	1
	Is power being supplied to the Bluetooth upgrade module? **Yes** Refer to the warranty policy and procedures manual if the Bluetooth upgrade module is suspect. **No** GO to C11.
C11:	
	1
	Are power, ignition, and ground being supplied to the portable support electronics (PSE) module? **Yes** Refer to the warranty policy and procedures manual if the PSE module is suspect. **No** Rectify as necessary. Refer to the electrical guides.

PINPOINT TEST D : "PHONE OFF" MESSAGE DISPLAYED (TOUCH-SCREEN ONLY)

TEST CONDITIONS	DETAILS/RESULTS/ACTIONS
D1:	
	1
	Is the Bluetooth system paired to a mobile phone handset? **Yes** GO to D2. **No** Key off ignition and wait 6 minutes for the portable support electronics (PSE) module to shut down. Key on ignition.GO to D5.
D2:	
	1
	Is the paired phone handset within range and switched on? **Yes** GO to D3. **No** GO to D4.
D3:	
	1
	Is the paired phone handset 'connected' to the vehicle phone system? **Yes** GO to D4. **No** Follow instructions to 'connect' specific handset with the vehicle phone system.GO to D4.
D4:	
	1
	Has the user switched out of phone mode e.g. audio, and then back to phone mode? **Yes** This is a system issue carried over from the previous phone system. Make sure that the last paired phone is on and within range, and test for normal operation. **No** Call Technical Helpline.
D5:	
	1
	Does the display still show the "PHONE OFF" message? **Yes** GO to D6. **No** Check for normal operation.
D6:	
	1
	Are the D2B connections loose or damaged? **Yes** Reconnect/change/repair the D2B leads and check for normal operation. **No** GO to D7.
D7:	
	1

	Check all connections/connectivity to and from the portable support electronics (PSE) module and the Bluetooth upgrade module. Are any of the harness connections loose or damaged? **Yes** Rectify as necessary. Refer to the electrical guides. **No** Refer to the warranty policy and procedures manual if a module is suspect.

PINPOINT TEST E : CANNOT ANSWER/REJECT/END CALL FROM THE AUDIO HEAD UNIT/TOUCH SCREEN/STEERING WHEEL CONTROL

TEST CONDITIONS	DETAILS/RESULTS/ACTIONS
E1:	
	1
	Cannot answer call? **Yes** Read DTCs from the portable support electronics (PSE) module using the approved diagnostic system and rectify as necessary.GO to E3. **No** GO to E2.
E2:	
	1
	Cannot reject/end call? **Yes** This is a network dependant feature, consult the relevant mobile phone network before continuing. Read DTCs from the portable support electronics (PSE) module using the approved diagnostic system and rectify as necessary.GO to E3. **No** GO to E3.
E3:	
	1
	Can call be answered/rejected/ended from the handset (with Bluetooth link still connected)? **Yes** GO to E4. **No** Disconnect the Bluetooth link between the handset and vehicle phone system and re-try the call.GO to E5.
E4:	
	1
	Is audio heard during call/call set up? **Yes** Refer to audio head unit diagnostics using the approved diagnostic system. **No** Check D2B ring is complete. Rectify as necessary.
E5:	
	1
	Can call be answered/rejected/ended from the handset with Bluetooth link disconnected? **Yes** Key off ignition and wait 6 minutes for the portable support electronics (PSE) module to shut down. Switch off the handset; remove the battery from the back of the handset. Replace the battery into the handset and switch on. Key on ignition. Make sure the Bluetooth link is reconnected and re-try the call.GO to E6. **No** This may be a handset issue, consult the handset supplier.
E6:	
	1
	Can the call be answered/rejected/ended from the handset (with Bluetooth link connected)? **Yes** Problem may have been due to the Bluetooth link being inoperative. **No** Pair and connect a different known 'good' handset to the vehicle phone system and make an incoming call.GO to E7.
E7:	
	1
	Can the call be answered/rejected/ended from the handset (with Bluetooth link connected)? **Yes** This may be a handset issue, consult the handset supplier. **No** GO to E8.
E8:	
	1
	Check all connections/connectivity to and from the portable support electronics (PSE) module and the Bluetooth upgrade module. Are any of the harness connections loose or damaged? **Yes** Rectify as necessary. Refer to the electrical guides. **No** Refer to the warranty policy and procedures manual if a module is suspect.

PINPOINT TEST F : UNABLE TO CONNECT THE HANDSET TO TELEPHONE SYSTEM

TEST CONDITIONS	DETAILS/RESULTS/ACTIONS
F1:	
	1
	Was the handset the last device to be connected to the vehicle? **Yes** GO to F2. **No** In the handset Bluetooth menu, delete any existing "Jaguar" devices from the list. Enter the ##3#*# key sequence to initiate the pairing process. Follow pairing process for the specific handset. GO to F6.
F2:	
	1

	In the handset Bluetooth menu, is "Jaguar" listed as a paired device? **Yes** GO to F3. **No** Follow pairing process for the specific handset. GO to F6.
F3:	
	1
	Is the handset 'connected' to another Bluetooth device (i.e. not "Jaguar")? **Yes** Check "Active Devices" in the handset's Bluetooth menu and disconnect the handset from the other Bluetooth device. Follow the instructions for the specific handset to allow the handset to 'connect' to the vehicle.GO to F8. **No** GO to F4.
F4:	
	1
	What message does the vehicle display show, "Connected" or "No BT Phone"? **Yes** Follow the vehicle un-pairing process, delete "Jaguar" from the handset device list and key off ignition for 6 minutes. Key on ignition. Follow the pairing process for the specific handset.GO to F6. **No** GO to F5.
F5:	
	1
	Is the vehicle in "Discover Me" mode? **Yes** Follow pairing process for the specific handset. GO to F6. **No** Go to'"HANDSET IN USE" or "HANDSET"' message displayed - GO to Pinpoint Test B.
F6:	
	1
	Has the handset paired successfully with the vehicle? **Yes** GO to F7. **No** Go to 'Unable to pair' - GO to Pinpoint Test C.
F7:	
	1
	Has the handset automatically connected to the vehicle phone system? **Yes** Following the instructions for the specific handset to make sure that the Bluetooth settings are set for automatic connection, connection should now be complete. **No** Follow the instructions for the specific handset to allow the handset to 'connect' to the vehicle.GO to F8.
F8:	
	1
	Has the handset connected to the vehicle phone system? **Yes** Following the instructions for the specific handset to make sure that the Bluetooth settings are set for automatic connection, connection should now be complete. **No** Key off ignition and wait 6 minutes for the portable support electronics (PSE) module to shut down. Switch off the handset; remove the battery from the back of the handset. Replace the battery into the handset and switch on. Key on ignition. Re-try pairing and connecting. GO to F9.
F9:	
	1
	Has the handset connected to the vehicle phone system? **Yes** Following the instructions for the specific handset to make sure that the Bluetooth settings are set for automatic connection, connection should now be complete. **No** Pair and connect a different known 'good' handset to the vehicle phone system. GO to F10.
F10:	
	1
	Does the handset 'connect' OK? **Yes** This is a handset issue, consult the handset supplier. **No** Refer to the warranty policy and procedures manual if the Bluetooth upgrade module is suspect.

PINPOINT TEST G : BLUETOOTH CONNECTION IS DROPPED

TEST CONDITIONS	DETAILS/RESULTS/ACTIONS
G1:	
	1
	Does the handset battery have a good level of charge? **Yes** GO to G2. **No** Recharge the handset battery. Bluetooth performance cannot be guaranteed with low battery power.
G2:	
	1
	Does the handset show good signal strength? **Yes** GO to G3. **No** Without good signal strength, the vehicle display will show "SIG_____" or "No BT Phone" or "No Service". Move into an area with good signal strength and check for normal operation.
G3:	

	1
	Check the handset menu. Has auto connect been turned on? **Yes** GO to G4. **No** Switch auto connect on and check for normal operation.
G4:	
	1
	Has the user tried to transfer a call from hands free to handset? **Yes** Check the handset guide info, some handsets will not auto reconnect Bluetooth after a handset call. **No** GO to G5.
G5:	
	1
	Does the handset display show that it is connected to the vehicle? **Yes** GO to G7. **No** GO to G6.
G6:	
	1
	Does the vehicle display "SIG_____" or "No BT Phone"? **Yes** Follow instructions for the specific handset to 'connect' the handset to vehicle.GO to G10. **No** GO to G7.
G7:	
	1
	Does the vehicle display "SIG*" or "Phone Connected"? **Yes** Bluetooth connection has not been dropped, check for normal operation. **No** Key off ignition and wait 6 minutes for the portable support electronics (PSE) module to shut down. Switch off the handset; remove the battery from the back of the handset. Replace the battery into the handset and switch on. Key on ignition. GO to G8.
G8:	
	1
	Does the vehicle display "SIG*" or "Phone Connected"? **Yes** Check for normal operation. **No** Follow the vehicle un-pairing process, delete "Jaguar" from the handset device list and key off ignition for 6 minutes. Key on ignition. Follow pairing process for the specific handset. GO to G9.
G9:	
	1
	Has the handset paired successfully with the vehicle? **Yes** Follow instructions for the specific handset to 'connect' the handset to vehicle.GO to G10. **No** Go to 'Unable to pair' - GO to Pinpoint Test C.
G10:	
	1
	Does the handset 'connect'? **Yes** GO to G11. **No** Go to 'Unable to connect' - GO to Pinpoint Test F.
G11:	
	1
	Does the vehicle display show that it is 'connected'? **Yes** Check for normal operation. **No** Refer to the warranty policy and procedures manual if the Bluetooth upgrade module is suspect.

PINPOINT TEST H : INCORRECT OR NO PHONEBOOK ENTRIES

TEST CONDITIONS	DETAILS/RESULTS/ACTIONS
H1:	
	1
	Check the Jaguar Bluetooth approved phone list guide: Does the handset support phonebook download? **Yes** GO to H2. **No** Advise user that the handset does not support phonebook download.
H2:	
	1
	Is the Bluetooth system paired and connected to a phone handset? **Yes** GO to H3. **No** Pair and connect an approved handset to the vehicle phone system.GO to H2.
H3:	
	1

	Has the user followed vehicle and handset instructions for downloading phonebook? **Yes** GO to H4. **No** Refer to the vehicle handbooks/handset 'quick guide information' regarding phonebook download. Check for normal operation.
H4:	
	1
	After "Downloading the phonebook" has the ignition been switched off for 6 minutes? **Yes** GO to H7. **No** Make sure that the ignition has been switched off for 6 minutes after following process for downloading phonebook. The Bluetooth upgrade module remains active for 6 minutes after the ignition has been switched off. It is important to wait this 6 minutes so that a clean boot-up of the Bluetooth upgrade module is achieved and the correct information is stored. Switch ignition on to prompt the portable support electronics (PSE) module to pull phonebook entries from the Bluetooth upgrade module. GO to H5.
H5:	
	1
	Can the user view the phonebook entries on the vehicle display? **Yes** End. **No** GO to H6.
H6:	
	1
	Have two or more handsets been tried? **Yes** GO to H9. **No** Pair and connect a different known 'good' handset which will automatically download the phonebook to the vehicle phone system. GO to H9.
H7:	
	1
	After switching the ignition back on, does the handset connect to the vehicle phone system? **Yes** GO to H8. **No** Reconnect the handset and make sure auto-reconnect is set to on.GO to H7.
H8:	
	1
	Is the phonebook available on the vehicle display? **Yes** End **No** Pair and connect a different known 'good' handset which will automatically download the phonebook to the vehicle phone system.GO to H9.
H9:	
	1
	Is the phonebook available on the vehicle display? **Yes** This is an issue with the user's handset, consult the handset supplier. **No** Refer to the warranty policy and procedures manual if a module is suspect.

PINPOINT TEST I : NO THIRD PARTY AUDIO

TEST CONDITIONS	DETAILS/RESULTS/ACTIONS
I1:	
	1 Check the handset manual and the handset settings to make sure user's speech is routed through the vehicle microphone and not the handset microphone.
	Does 3rd party call audio work with the call in 'handset' mode? **Yes** Check for telephone related DTCs using the approved diagnostic system. Rectify as necessary.GO to I5. **No** GO to I2.
I2:	
	1
	Is there any 3rd party call audio with the handset disconnected from the Bluetooth system? **Yes** Pair and connect a different known 'good' handset to the vehicle phone system and make a call to the 3rd party. GO to I4. **No** Try calling another 3rd party from the handset.GO to I3.
I3:	
	1
	Is there any 3rd party audio? **Yes** Initial audio problem may be due to a fault at 3rd party end. Check by calling them on another number. **No** This may be a handset issue, consult the handset supplier.
I4:	
	1
	Does the 3rd party call audio work with the Bluetooth system? **Yes** This may be a handset issue, consult the handset supplier. **No** Check for telephone related DTCs using the approved diagnostic system. Rectify as necessary.GO to I5.

I5:

1

Is there any 3rd party audio?

Yes

End.

No

Disconnect the Bluetooth link between the handset and vehicle phone system and re-try the call.GO to I6.

I6:

1

Does the 3rd party call audio work with the mobile phone disconnected from the vehicle?

Yes

Re-connect the Bluetooth link between the handset and the vehicle phone system and re-try the call.GO to I8.

No

Switch off the handset, remove the battery from the back of the handset. Replace the battery into the handset and switch on. Make sure the Bluetooth link is disconnected and re-try the call.GO to I7.

I7:

1

Does the 3rd party call audio work with the mobile phone disconnected from the vehicle?

Yes

Problem may be due to a faulty Bluetooth connection.

No

This may be a handset issue, consult the handset supplier.

I8:

1

Does the 3rd party call audio work with the Bluetooth system?

Yes

Problem may be due to a faulty Bluetooth connection.

No

GO to I9.

I9:

1

Does the 3rd party call audio work with the mobile phone in 'handset' mode?

Yes

GO to I10.

No

Key off ignition and wait 6 minutes for the portable support electronics (PSE) module to shut down. Key on ignition. Make sure the Bluetooth link is re-connected and re-try the call pairing and connecting.GO to I14.

I10:

1

Does the vehicle have voice control fitted?

Yes

GO to I11.

No

GO to I12.

I11:

1

Does the voice control pick up commands from the user?

Yes

Check harness connections between the microphone and the portable support electronics (PSE) module are not loose or damaged.GO to I16.

No

Refer to the warranty policy and procedures manual if the voice control module is suspect.

I12:

1

Is the vehicle a USA/Canada/Mexico vehicle?

Yes

GO to I13.

No

Check harness connections between the microphone and the portable support electronics (PSE) module are not loose or damaged.GO to I16.

I13:

1

Does the vehicle have the voice control shorting loop fitted?

Yes

Check harness connections between the microphone and the portable support electronics (PSE) module are not loose or damaged.GO to I16.

No

Fit the voice control shorting loop and check for normal operation.

I14:

1

Does the 3rd party call audio work with the Bluetooth system?

Yes

Problem may be due to a faulty Bluetooth connection.

No

Pair and connect a different known 'good' handset to the vehicle phone system and make an incoming call.GO to I15.

I15:

1

Does the 3rd party call audio work with the Bluetooth system?

Yes

This may be a handset issue, consult the handset supplier.

No

Check harness connections between the microphone and the portable support electronics (PSE) module are not loose or damaged.GO to I16.

I16:

1

	Are the microphone harness connections damaged? **Yes** Rectify as necessary. Refer to the electrical guides. **No** Replace the microphone and re-try the call. GO to I17.
I17:	
	1
	Does the 3rd party call audio work with the Bluetooth system? **Yes** Problem may have been due to a faulty microphone. **No** Refer to the warranty policy and procedures manual if a module is suspect.

PINPOINT TEST J : NO IN-VEHICLE AUDIO

TEST CONDITIONS	DETAILS/RESULTS/ACTIONS
J1:	
	1
	Can the audio sources be heard through the vehicle speakers e.g. radio? **Yes** GO to J2. **No** Check D2B connections are not loose or damaged. Reconnect/change/repair the D2B leads and check for normal operation.
J2:	
	1
	Can the call be heard when transferred to the handset? **Yes** Key off ignition and wait 6 minutes for the portable support electronics (PSE) module to shut down. Key on ignition. Make sure the Bluetooth link is reconnected and re-try the call. GO to J3. **No** Disconnect the Bluetooth link between the handset and vehicle phone system and re-try the call. GO to J4.
J3:	
	1
	Can the audio be heard through the vehicle speakers? **Yes** The audio problem may have been due to the Bluetooth link being disconnected. **No** Pair and connect a different known 'good' handset to the vehicle phone system and make a call to the 3rd party.GO to J7.
J4:	
	1
	Does the handset audio work with mobile phone disconnected from the vehicle? **Yes** Key off ignition and wait 6 minutes for the portable support electronics (PSE) module to shut down. Key on ignition. Switch off the handset; remove the battery from the back of the handset. Replace the battery into the handset and switch on. Key on ignition. Make sure the Bluetooth link is reconnected and re-try the call. GO to J6. **No** Try calling another 3rd party from the handset. GO to J5.
J5:	
	1
	Is there any call audio on the handset? **Yes** Initial audio problem may be due to a fault at the 3rd party end, check by calling them on another number. **No** This may be a handset issue, consult the handset supplier.
J6:	
	1
	Can the audio be heard through the vehicle speakers? **Yes** The audio problem may have been due to the Bluetooth link being disconnected. **No** Pair and connect a different known 'good' handset to the vehicle phone system and make a call to the 3rd party.GO to J7.
J7:	
	1
	Can the audio be heard through the vehicle speakers? **Yes** This may be a handset issue, consult the handset supplier. **No** Check harness connections between the Bluetooth upgrade module and the portable support electronics (PSE) module. GO to J8.
J8:	
	1
	Are any of the harness connections damaged? **Yes** Rectify as necessary. Refer to the electrical guides. **No** Refer to the warranty policy and procedures manual if a module is suspect.

PINPOINT TEST K : NO RINGING HEARD THROUGH THE VEHICLE SPEAKERS

TEST CONDITIONS	DETAILS/RESULTS/ACTIONS
K1:	
	1

	When there is no call in progress, and the audio source is changed, is any audio heard e.g. from radio? **Yes** GO to K3. **No** Check D2B connections are not loose and that all nodes are connected on the D2B ring. Rectify as necessary.GO to K2.
K2:	
	1
	Are any of the D2B connections damaged? **Yes** Change/repair the D2B leads and check for normal operation. **No** Call Technical Helpline.
K3:	
	1
	Is the vehicle phone system volume set to more than 15? **Yes** GO to K4. **No** Make sure that the vehicle phone system is set to more than 15 and retry the call.
K4:	
	1
	Is the message "incoming call" displayed? **Yes** GO to K5. **No** GO to K6.
K5:	
	1
	On answering the incoming call using the vehicle controls, can the 3rd party be heard through the vehicle speakers? **Yes** GO to K6. **No** Go to 'No in-vehicle audio' - GO to Pinpoint Test J.
K6:	
	1
	Is there any ringing heard on the handset with the Bluetooth link connected? **Yes** GO to K7. **No** GO to K10.
K7:	
	1
	Does the handset support in-band ringing or send its ringing status to the Bluetooth upgrade module? **Yes** Key off ignition and wait 6 minutes for the portable support electronics (PSE) module to shut down. Key on ignition. Make sure the Bluetooth link is re-connected and re-try the call. GO to K8. **No** This is a handset issue, contact the handset supplier or replace with another handset from the approved list.
K8:	
	1
	Can any ringing be heard through the vehicle speakers? **Yes** The audio problem may have been due to the Bluetooth link being disconnected. **No** Un-pair the current handset and pair/connect a known good handset with the vehicle. Make an incoming call. GO to K9.
K9:	
	1
	Can any ringing be heard through the vehicle speakers? **Yes** Contact the handset supplier, the handset may be faulty. **No** GO to K10.
K10:	
	1
	Is the message "incoming call" displayed? **Yes** Check the handset instructions to find "profile" settings.GO to K14. **No** GO to K11.
K11:	
	1
	Does the handset have good signal strength? **Yes** Disconnect the Bluetooth connection. Make sure the handset is not set to silent. Then make an incoming call. GO to K12. **No** Move into area where the handset receives good signal strength. Make an incoming call and check for normal operation.
K12:	
	1
	Is there any ringing heard on the handset with the Bluetooth link disconnected? **Yes** Reconnect the Bluetooth connection, and then make an incoming call. GO to K13. **No** Contact the handset supplier, the handset may be faulty.
K13:	

	1
	Can any ringing be heard through the vehicle speakers? **Yes** Problem due to a faulty Bluetooth link. **No** GO to K4.
K14:	
	1
	Has the handset "profile" been set to "silent"? **Yes** Change settings within profile, make an incoming call and check for normal operation. **No** GO to K15.
K15:	
	1
	Has the handset volume been set to minimum? **Yes** Increase volume setting, make an incoming call and check for normal operation. **No** Check Bluetooth connection between the handset and vehicle is OK. GO to K16.
K16:	
	1
	Is the Bluetooth connection OK? **Yes** Disconnect the Bluetooth connection. Make sure that the handset is NOT set to silent, then make an incoming call.GO to K17. **No** Follow the handset instructions for 'connecting' the Bluetooth link, then make an incoming call and check for normal operation.
K17:	
	1
	Is there any ringing heard on the handset? **Yes** Reconnect Bluetooth link between the handset and vehicle.GO to K18. **No** Un-pair the current handset and pair/connect a known good handset with the vehicle. Make an incoming call. GO to K9.
K18:	
	1
	Can any ringing be heard through the vehicle speakers? **Yes** Change settings within profile, make an incoming call and check for normal operation. **No** Check harness connections between the Bluetooth upgrade module and the portable support electronics (PSE) module.GO to K19.
K19:	
	1
	Are any of the harness connections damaged? **Yes** Rectify as necessary. Refer to the electrical guides. **No** Refer to the warranty policy and procedures manual if a module is suspect.

PINPOINT TEST L : LOW AUDIO VOLUME	
TEST CONDITIONS	**DETAILS/RESULTS/ACTIONS**
L1:	
	1
	Low volume in vehicle (rather than at 3rd party)? **Yes** GO to L2. **No** If volume is low at 3rd party.GO to L9.
L2:	
	1
	Is the vehicle phone volume set at 12 or above? **Yes** Check fade & balance are both set at '0' or mid point on slider controls. GO to L3. **No** Increase phone volume to above 12. GO to L1.
L3:	
	1
	Is radio volume OK? **Yes** GO to L4. **No** Call Technical Helpline.
L4:	
	1
	Is Bluetooth link between the handset and vehicle still connected? **Yes** GO to L5. **No** Re-connect the Bluetooth link and re-try the call.GO to L1.
L5:	
	1

	Is call volume still low when call transferred to 'handset' mode? **Yes** GO to L6. **No** Key off ignition and wait 6 minutes for the portable support electronics (PSE) module to shut down. Key on ignition and re-try the call. GO to L16.
L6:	
	1
	Is the call volume still low with the handset disconnected from the Bluetooth system? **Yes** GO to L7. **No** Try calling another 3rd party from the handset.GO to L8.
L7:	
	1
	Is the handset volume setting low? **Yes** Increase the handset volume setting and re-try the call.GO to L6. **No** Low audio issue due to the handset, consult the handset supplier.
L8:	
	1
	Is the call volume still low with the handset disconnected from the Bluetooth system? **Yes** Low audio issue due to the handset, consult the handset supplier. **No** Initial audio problem may be due to a fault at the 3rd party end. Check by calling them on another number.
L9:	
	1
	Check that handset volume setting and signal strength are not low. Is call volume still low when call transferred to 'handset' mode? **Yes** GO to L14. **No** GO to L10.
L10:	
	1
	Is the microphone fitted OK? Check DTCs using the approved diagnostic system. **Yes** GO to L12. **No** Rectify as necessary.GO to L11.
L11:	
	1
	Is volume still low? **Yes** GO to L12. **No** Issue caused by faulty microphone or microphone circuit.
L12:	
	1
	Is voice control fitted to vehicle? **Yes** Disconnect the voice control module and fit the voice control shorting loop to the wiring harness.GO to L13. **No** GO to L14.
L13:	
	1
	Is volume still low? **Yes** GO to L14. **No** Refer to voice control diagnostics.
L14:	
	1
	Is the 3rd party call audio still low with the handset disconnected from the Bluetooth system? **Yes** Pair and connect a different known 'good' handset to the vehicle phone system and make a call to a 3rd party.GO to L17. **No** Re-connect Bluetooth link and re-try the call.GO to L15.
L15:	
	1
	Is volume still low? **Yes** Key off ignition and wait 6 minutes for the portable support electronics (PSE) module to shut down. Key on ignition and re-try the call.GO to L16. **No** Issue caused by a faulty Bluetooth connection.
L16:	
	1
	Is volume still low? **Yes** Refer to the warranty policy and procedures manual if a module is suspect. **No** Issue caused by a faulty Bluetooth connection.
L17:	
	1

	Is volume still low? **Yes** Refer to the warranty policy and procedures manual if a module is suspect. **No** Low audio issue caused by the handset, consult the handset supplier.

PINPOINT TEST M : CANNOT DIAL OUT FROM AUDIO HEAD UNIT/TOUCH-SCREEN/STEERING WHEEL CONTROL	
TEST CONDITIONS	**DETAILS/RESULTS/ACTIONS**
M1:	
	1
	Is D2B ring complete? **Yes** GO to M2. **No** Reconnect/change/repair the D2B leads and check for normal operation.
M2:	
	1
	Does display show "NO SERVICE" or drop out of phone mode? **Yes** GO to M3. **No** GO to M4.
M3:	
	1
	Signal strength on the handset greater than 1? **Yes** GO to M4. **No** Re-try call in a stronger signal strength area, low signal strength can cause interference and distortion in car and at 3rd party.
M4:	
	1
	Can user dial out from the handset? **Yes** Key off ignition and wait 6 minutes for the portable support electronics (PSE) module to shut down. Key on ignition. Make sure the Bluetooth link is reconnected and re-try the call.GO to M5. **No** Switch off the handset, remove the battery from the back of the handset. Replace the battery into the handset and switch on. Make sure the Bluetooth link is reconnected and re-try the call.GO to M5.
M5:	
	1
	Can user dial out from audio head unit or steering wheel control? **Yes** Problem may have been caused by the Bluetooth link being disconnected. **No** Pair and connect a different known 'good' handset to the vehicle phone system and make an incoming call.GO to M6.
M6:	
	1
	Can user dial out from audio head unit or steering wheel control? **Yes** This may be a handset issue, consult the handset supplier. **No** Refer to the warranty policy and procedures manual if a module is suspect.

PINPOINT TEST N : VOICE ACTIVATED PHONE FUNCTIONS INOPERATIVE	
TEST CONDITIONS	**DETAILS/RESULTS/ACTIONS**
N1:	
	1 Make sure that the customer has completed voice recognition training.
	Check audio head unit DTCs using the approved diagnostic system, are there any audio head unit DTCs stored? **Yes** Carry out the pinpoint tests associated with the relevant DTCs using the manufacturer approved diagnostic system. **No** GO to N2.
N2:	
	1
	Is there a dial problem? **Yes** GO to N3. **No** GO to N5.
N3:	
	1
	Dials wrong number? **Yes** GO to N7. **No** GO to N4.
N4:	
	1
	Will not dial? **Yes** GO to N9. **No** GO to N5.
N5:	

	1
	Cannot dial using voice control? **Yes** GO to N8. **No** GO to N6.
N6:	
	1
	Cannot turn phone on/off? **Yes** GO to N8. **No** GO to N10.
N7:	
	1
	Is the handset on the approved phone list? **Yes** Call Technical Helpline. **No** Only handsets specified in the approved list with the correct level of software can be guaranteed to work.
N8:	
	1
	Is voice control on the D2B ring? **Yes** GO to N9. **No** Not a phone issue.
N9:	
	1
	Does verbal communication confirm correct number? **Yes** GO to N10. **No** Not a phone issue.
N10:	
	1
	Does the audio head unit/touch-screen show "NO PHONE" or "PHONE NOT FITTED" (i.e. is phone off the D2B ring)? **Yes** GO to N11. **No** GO to N12.
N11:	
	1 Are any of the D2B connections loose or damaged?
	Yes Reconnect/change/repair the D2B leads and check for normal operation. **No** Refer to the warranty policy and procedures manual if a module is suspect.
N12:	
	1
	Check all connections/connectivity to and from the portable support electronics (PSE) module and the Bluetooth upgrade module. Are any of the harness connections loose or damaged? **Yes** Rectify as necessary. Refer to the electrical guides. **No** Refer to the warranty policy and procedures manual if a module is suspect.

PINPOINT TEST O : CALL IS DROPPED

TEST CONDITIONS	DETAILS/RESULTS/ACTIONS
O1:	
	1
	Is the 3rd party call to another cellular phone? **Yes** GO to O3. **No** GO to O2.
O2:	
	1
	Is the 3rd party call to a landline? **Yes** Disconnect the Bluetooth link between the handset and vehicle phone system. Re-try the call in the vehicle, preferably with the handset in the same position as when connected via the Bluetooth link. GO to O4. **No** GO to O5.
O3:	
	1
	Is the signal strength on the 3rd party handset greater than 1? **Yes** Disconnect the Bluetooth link between the handset and vehicle phone system. Re-try the call in the vehicle, preferably with the handset in the same position as when connected via the Bluetooth link. GO to O4. **No** Re-try call in stronger signal strength area. Low signal strength can lead to calls being dropped.
O4:	
	1

	Is the call dropped again? **Yes** Pair and connect a different known 'good' handset to the vehicle phone system and make an incoming call. GO to O7. **No** Switch off the handset, remove the battery from the back of the handset. Replace the battery into the handset and switch on. Make sure the Bluetooth link is reconnected and re-try the call.GO to O5.
O5:	
	1
	Is the call dropped again? **Yes** Key off ignition and wait 6 minutes for the portable support electronics (PSE) module to shut down. Key on ignition. Make sure the Bluetooth link is reconnected and re-try the call.GO to O6. **No** Problem may have been caused by the Bluetooth link being disconnected.
O6:	
	1
	Is the call dropped again? **Yes** Pair and connect a different known 'good' handset to the vehicle phone system and make an incoming call.GO to O7. **No** Problem may have been caused by the Bluetooth link being disconnected.
O7:	
	1
	Is the call dropped again? **Yes** Refer to the warranty policy and procedures manual if a module is suspect. **No** This may be a handset issue, consult the handset supplier.

PINPOINT TEST P : INTERFERENCE AND DISTORTION

TEST CONDITIONS	DETAILS/RESULTS/ACTIONS
P1:	
	1
	Is interference present with Bluetooth link disconnected? **Yes** GO to P2. **No** Check for external sources of interference. Drive to where the customer has problems to identify if location dependant. Test in an area of known high signal strength.GO to P4.
P2:	
	1
	Is it present with a different known 'good' handset paired/connected? **Yes** GO to P3. **No** This may be a handset issue, consult the handset supplier.
P3:	
	1
	Is it present with other network carriers? **Yes** Check for external sources of interference. Drive to where the customer has problems to identify if location dependant. Test in an area of known high signal strength.GO to P4. **No** This may be a network or handset issue, consult the handset supplier/network provider.
P4:	
	1
	Are there any powered items/aftermarket accessories in the car? **Yes** Switch off any powered items/aftermarket accessories in the car.GO to P5. **No** Refer to the warranty policy and procedures manual if a module is suspect.
P5:	
	1
	Is interference still present? **Yes** Refer to the warranty policy and procedures manual if a module is suspect. **No** User to be advised of interference from aftermarket accessories.

PINPOINT TEST Q : UNABLE TO TRANSFER CALL BETWEEN HANDS FREE AND HANDSET

TEST CONDITIONS	DETAILS/RESULTS/ACTIONS
Q1:	
	1
	Does the specific handset guide state that the handset does not support call transfer? **Yes** Advise user that some software levels are not guaranteed to function correctly. Software to be changed to approved level or the handset to be changed. **No** Switch off the handset, remove the battery from the back of the handset. Replace the battery into the handset and switch on. Make sure the Bluetooth link is reconnected and re-try the call.GO to Q2.
Q2:	
	1

	Can the call be transferred between hands free and handset? **Yes** Problem may have been caused by the Bluetooth link being disconnected. **No** Key off ignition for 6 minutes for the portable support electronics (PSE) module to shut down. Key on ignition and re-try the call.GO to Q3.
Q3:	
	1
	Can the call be transferred between hands free and handset? **Yes** Problem may have been caused by the Bluetooth link being disconnected. **No** Pair and connect a different known 'good' handset to the vehicle phone system and make an incoming call. GO to Q4.
Q4:	
	1
	Can the call be transferred between hands free and handset? **Yes** This is a handset issue, consult the handset supplier. **No** Refer to the warranty policy and procedures manual if a module is suspect.

Cellular Phone - Bluetooth Module

Removal and Installation

Removal

1. Remove the floor console.
   For additional information, refer to: Floor Console (501-12 Instrument Panel and Console, Removal and Installation).
2. Remove the Bluetooth module.

Installation

1. To install, reverse the removal procedure.

Cellular Phone - Handset Holder

Removal and Installation

Removal

All vehicles

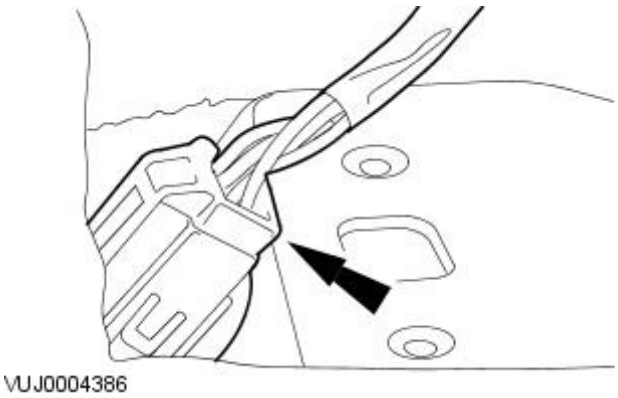

1. Remove the floor console
   For additional information, refer to: Floor Console (501-12 Instrument Panel and Console, Removal and Installation).
2. NOTE: US models only have an additional antenna connector.

   Disconnect the cellular phone electrical connector.

Vehicles with cordless cellular phone

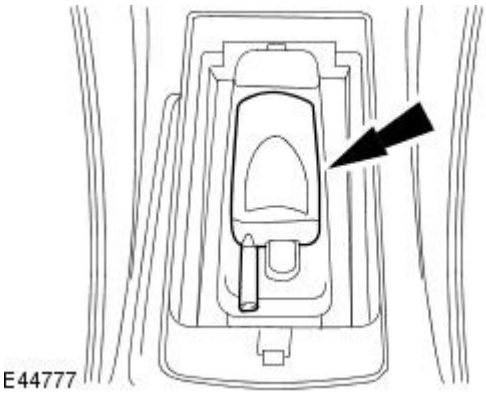

3. Remove the cellular phone.

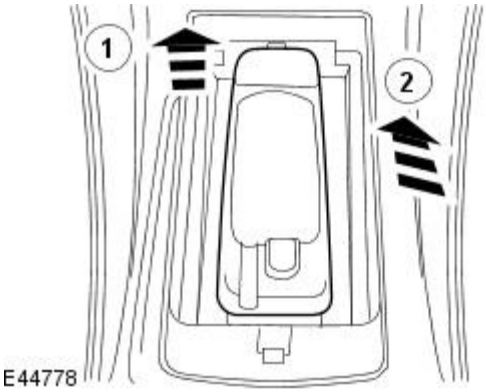

4. Remove the handset holder.
   1. Detach the handset holder.
   2. Remove the handset holder.

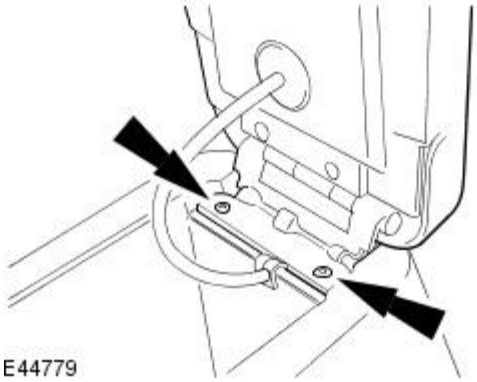

5. Remove the armrest.

Vehicles with corded cellular phone

6. Remove the armrest.

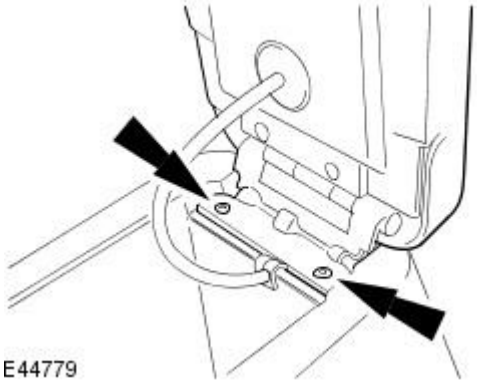

7. Remove the non slip mat.

8. Remove the handset hang up cup.

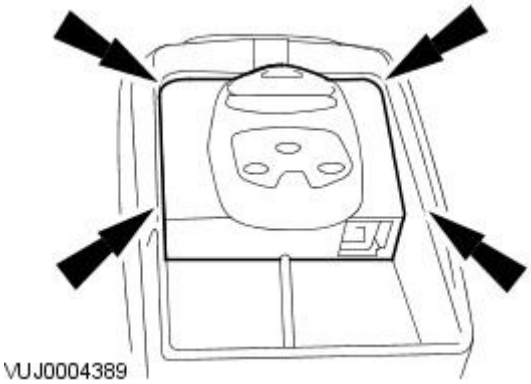

Installation

Vehicles with corded cellular phone

1. Install the handset hang up cup.

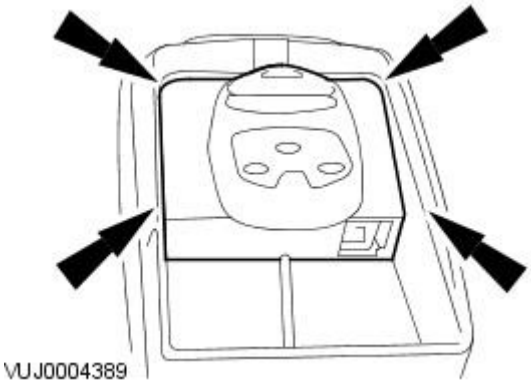

2. Install the non slip mat.

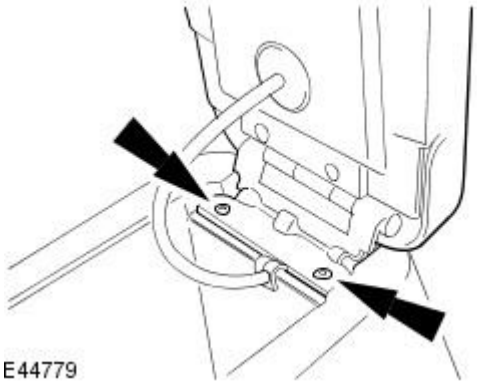

3. Install the armrest.

Vehicles with cordless cellular phone

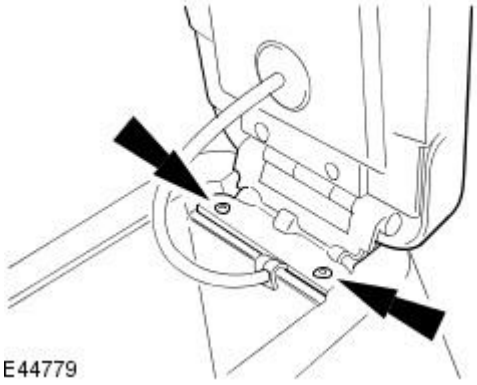

4. Install the armrest.

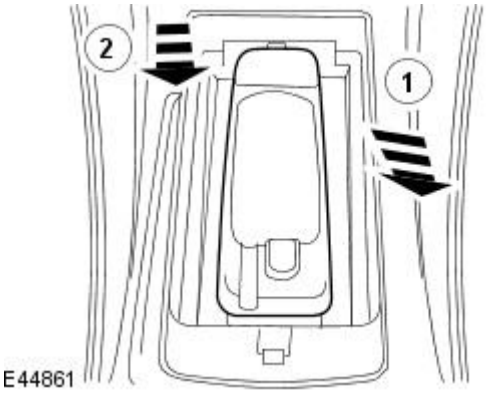

5. Attach the handset holder.

1. Install the handset holder.
2. Attach the handset holder.

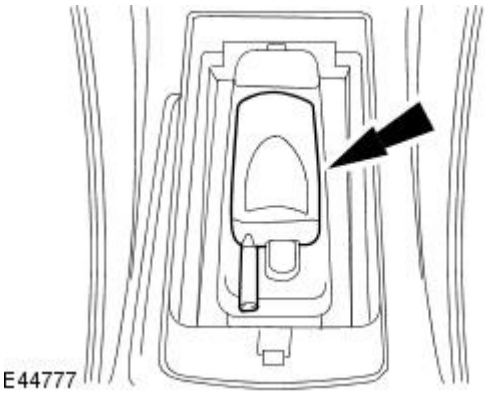

6. Install the cellular phone.

All vehicles

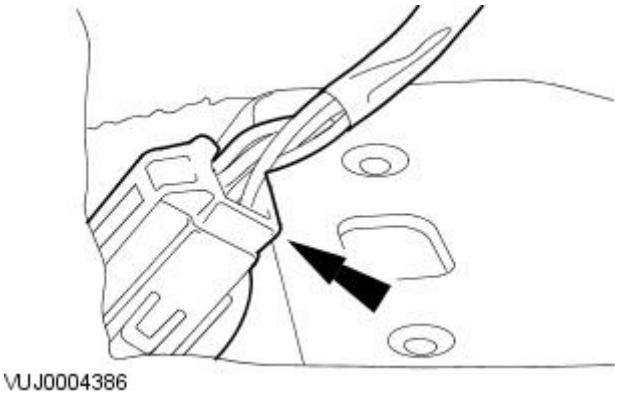

7. NOTE: US models only have an additional antenna connector.

Connect the cellular phone electrical connector.

8. Install the floor console
For additional information, refer to: Floor Console (501-12 Instrument Panel and Console, Removal and Installation).

Cellular Phone - Module4-Door

Removal and Installation

Removal

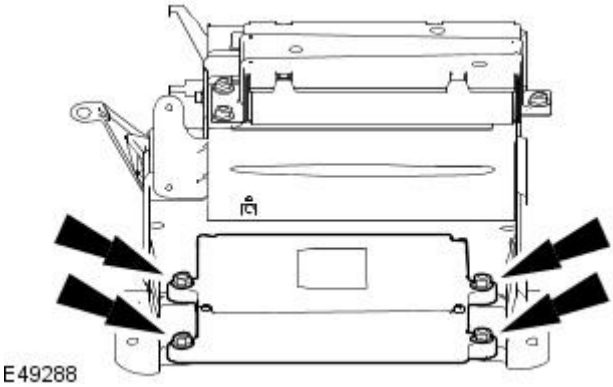

1. Remove the compact disc (CD) changer
   For additional information, refer to: Compact Disc (CD) Changer - 4-Door (415-01 Audio Unit, Removal and Installation).
2. Remove the module.

Installation

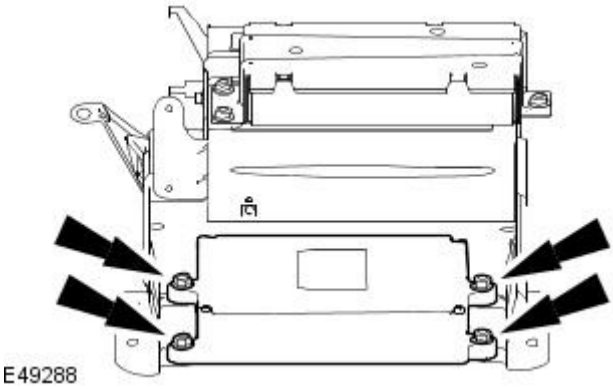

1. To install, reverse the removal procedure.
   - Tighten to 5 Nm.

Cellular Phone - ModuleWagon

Removal and Installation

Removal

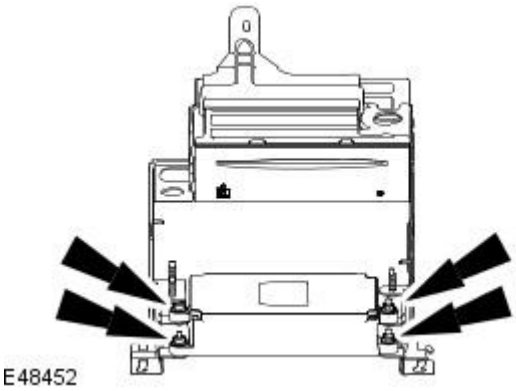

1. Disconnect the battery ground cable
   For additional information, refer to: Battery Disconnect and Connect (414-01 Battery, Mounting and Cables, General Procedures).
2. Remove the compact disc changer
   For additional information, refer to: Compact Disc (CD) Changer - Wagon (415-01 Audio Unit, Removal and Installation).
3. Remove the multifunction voice activated module
   For additional information, refer to: Multifunction Voice Activated Module - Wagon (419-10 Multifunction Electronic Modules, Removal and Installation).
4. Remove the module.

Installation

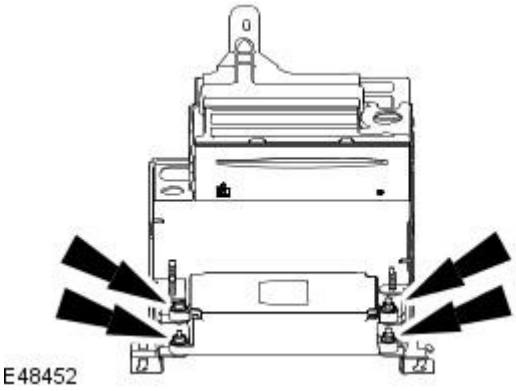

1. To install, reverse the removal procedure.
   - Tighten to 5 Nm.
2. Connect the battery ground cable
   For additional information, refer to: Battery Connect (414-01 Battery, Mounting and Cables, General Procedures).

Published: 11-May-2011

Multifunction Electronic Modules -

Torque Specifications

Description	Nm	lb-ft	lb-in
Voice activated control module	5	-	44

Multifunction Electronic Modules - Module Controlled Functions

Description and Operation

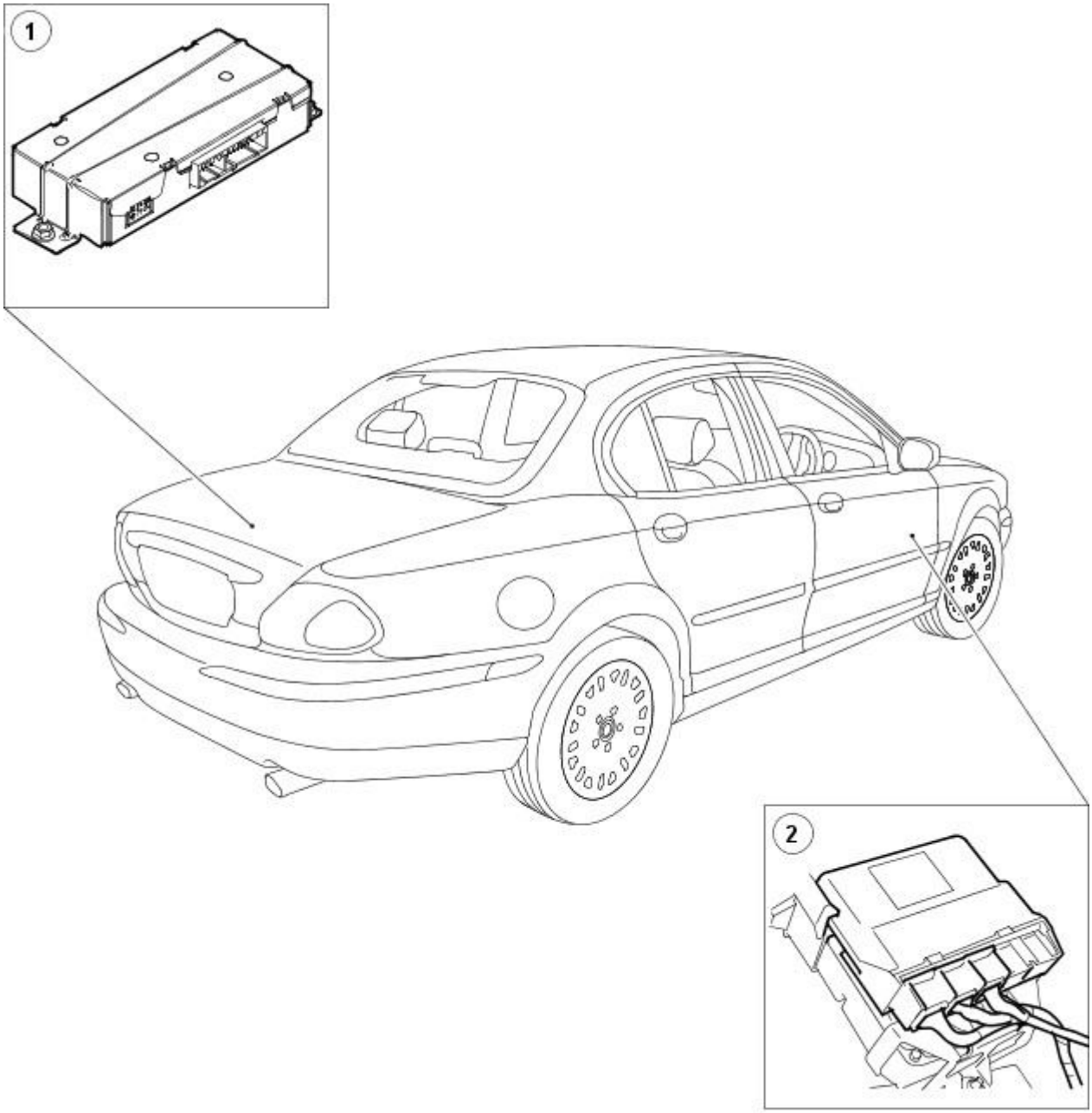

E46101

Item	Part Number	Description
1	—	Voice activated control module (VACM)
2	—	Generic electronic module (GEM)

Voice Activated Control Component Location

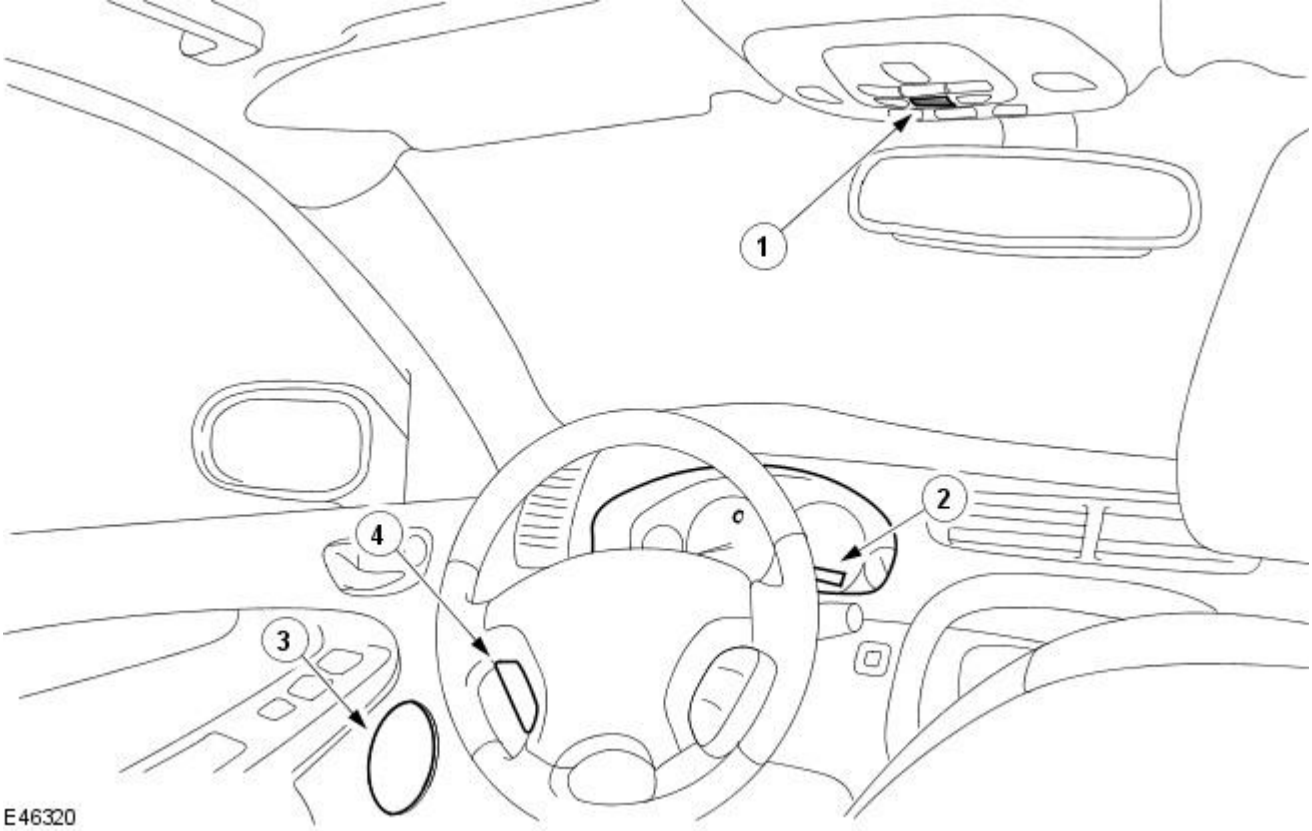

Item	Part Number	Description
1	—	Microphone
2	—	Visual feedback message center display
3	—	Audible feedback (incorporated in audio system)
4	—	Steering wheel controls

Generic Electronic Module (GEM)

The GEM module is located on the right hand side, below the instrument panel. The GEM module controls the wiper and security systems.

Voice Activated Control Module (VACM)

The VACM is located in the left hand side luggage compartment behind the trim panel. The VACM module controls and processes all the voice commands given by the driver, then delivers this information to the audio unit, navigation system module, television module, intergrated cellular phones and the climate control modules which then carry out these commands.

Microphone

The microphone is used for the cellular phone and to receive voice commands. The microphone supplies the information to the VACM which processes the commands and supplies the necessary information to the correct modules.

Visual Feedback Message Center Display

This display keeps the driver informed of the function which is being selected or processed.

Audible Feedback (Speakers)

This audible tone informs the driver when the system is able to receive commands for processing.

The verbal feedback speakers are incorporated in the audio speakers. These speakers are utilized to confirm to the driver that there verbal command has been accepted and is being proceeded.

Steering Wheel Controls VOICE/PHONE Button

This button is automatically configured by the audio unit depending on which systems are installed on the vehicle. For additional information, refer to the Owner Guide.

Multifunction Electronic Modules - Multifunction Electronic Module

Diagnosis and Testing

Principle of Operation

For a detailed description of the multifunction electronic modules, refer to the relevant Description and Operation sections in the workshop manual. REFER to: Module Controlled Functions (419-10 Multifunction Electronic Modules, Description and Operation).

Inspection and Verification

1. **1.** Verify the customer concern.
2. **2.** Visually inspect for obvious signs of electrical damage.

Visual Inspection Chart

Electrical
• Electrical connector(s) • Wiring harness for damage or corrosion • VACM module • GEM module • Microphone • Instrument cluster • Switch(s) • Speakers

3. **3.** If an obvious cause for an observed or reported concern is found, correct the cause (if possible) before proceeding to the next step.
4. **4.** If the cause is not visually evident, verify the symptom and refer to the Jaguar Approved Diagnostic System.

DTC Index

Voice Activated Control Module

CAUTION: when probing connectors to take measurements in the course of pinpoint tests, use the adapter kit, part number 3548-1358-00

• NOTE: if the control module/component is suspect and the vehicle remains under manufacturer warranty, refer to the Warranty Policy and Procedures manual (section B1.2), or determine if any prior approval program is in operation, prior to the installation of a new module or component.

• NOTE: When performing voltage or resistance tests always use a digital multimeter (DMM) accurate to three decimal places and with a current calibration certificate. When testing resistance, always take the resistance of the DMM leads into account.

• NOTE: Check and rectify basic faults first before beginning diagnostic routines that involve pinpoint tests.

• NOTE: Inspect connectors for signs of water ingress, and pins for damage and/or corrosion.

• NOTE: If DTCs are recorded and, after performing pinpoint tests, a fault is not present, an intermittent concern may be the cause. Always check for loose connectors and corroded terminals.

DTC	Description	Possible Causes	Action
U2601	D2B wake up - short to ground	• Voice activated control module • Wake up line short to ground	Refer to electrical circuit diagrams, check D2B wake up circuit for shorts to ground. Repair wiring harness using approved methods and materials. Clear DTC and retest system to confirm correct operation.
U2609	D2B wake up - pulse width out of spec	• Voice activated control module wake up line - circuit fault (pulse <50mS - pulse >110mS)	Refer to electrical circuit diagrams and notes, check voice activated control module D2B wake up line circuit for faults. Repair any defects, clear DTC and retest to confirm correct operation.
U2610	D2B slave ECU fails to receive a report position	• During initialization no position status report is received from one or more slave modules	Carry out any pin point tests associated with this DTC using the manufacturer approved diagnostic system. Refer to electrical circuit diagrams, notes and check D2B slave modules and circuit for faults. Replace as required, refer to the new module installation note at the top of the DTC index. Repair any defects, clear DTC and retest to confirm correct operation.
U2611	D2B slave ECU fails to receive an alarm clear command	• Voice activated control module - on entering alarm state, slave ECU has failed to receive alarm clear command	Refer to electrical circuit diagrams, notes and check D2B slave modules and circuit for faults. Replace as required, refer to the new module installation note at the top of the DTC index. Repair any defects, clear DTC and retest to confirm correct operation.
B2477	Module configuration failure	• Voice activated control module - module configuration failure	The module can be configured using the new module procedure. Check and configure as required.

Generic Electronic Module

CAUTION: when probing connectors to take measurements in the course of pinpoint tests, use the adapter kit, part number 3548-1358-00

• NOTE: if the control module/component is suspect and the vehicle remains under manufacturer warranty, refer to the Warranty Policy and Procedures manual (section B1.2), or determine if any prior approval program is in operation, prior to the installation of a new module or component.

• NOTE: When performing voltage or resistance tests always use a digital multimeter (DMM) accurate to three decimal places and with a

current calibration certificate. When testing resistance, always take the resistance of the DMM leads into account.

• NOTE: Check and rectify basic faults first before beginning diagnostic routines that involve pinpoint tests.

• NOTE: Inspect connectors for signs of water ingress, and pins for damage and/or corrosion.

• NOTE: If DTCs are recorded and, after performing pinpoint tests, a fault is not present, an intermittent concern may be the cause. Always check for loose connectors and corroded terminals.

DTC	Description	Possible Causes	Action
C1445	Vehicle speed failure	• Vehicle speed signal circuit failure	Refer to electrical diagrams, check vehicle speed signal circuit for faults such as open circuits, short to ground or power. Repair faults using approved methods and materials. Clear DTC and retest system to ensure correct operation.
B1298	Power supply sensor circuit short to battery	• Intrusion and inclination sensor power supply short to Battery.	Refer to electrical diagrams, check intrusion and inclination sensor circuits for short to power. Repair faults using approved methods and materials. Clear DTC and retest system to ensure correct operation.
B1299	Power supply sensor circuit short to ground	• Intrusion and inclination sensor power supply short to ground.	Refer to electrical diagrams, check intrusion and inclination sensor circuits for short to ground. Repair faults using approved methods and materials. Clear DTC and retest system to ensure correct operation.
B1315	Battery saver relay coil circuit short to battery	• Battery saver relay fault • Wiring harness fault	Refer to electrical diagrams, battery saver relay coil circuits for short to power. Repair faults using approved methods and materials. Clear DTC and retest system to ensure correct operation. Replace relay as required, clear DTC and retest system to ensure correct operation.
B1549	Power window master circuit short to battery	• Global closing output circuit shorted to battery	Refer to electrical diagrams, power window master circuit for short to power. Repair faults using approved methods and materials. Clear DTC and retest system to ensure correct operation.
B1550	Power window master circuit short to ground	• Global closing output circuit shorted to ground • Wiring harness concern	Refer to electrical diagrams, power window master circuit for short to ground. Repair faults using approved methods and materials. Clear DTC and retest system to ensure correct operation.
B1570	Lamp headlamp high-beam circuit short to ground	• Headlamp high beam circuit shorted to ground • wiring harness concern	Refer to electrical diagrams, headlamp high beam circuit for short to ground. Repair faults using approved methods and materials. Clear DTC and retest system to ensure correct operation.
B1438	Wiper mode select switch circuit failure	• Wiper switch stuck or in wrong position during wiper test routine • Wiring harness concern	Inspect switch for signs of damage or incorrect operation or sticking, replace switch as required. Check wiper control switch circuits for open circuits, shorts to power or ground. Repair faults using approved methods and materials. Clear DTC and retest system to ensure correct operation.
B1446	Wiper park sense circuit failure	• Wiper park to park time incorrect (12 second limit exceeded)	Inspect wiper motor harness for damage, Refer to electrical circuit diagrams and check wiper motor circuits for open circuits, shorts to ground or power. Repair faults using approved methods and materials. Clear DTC and retest system to ensure correct operation.
B1450	Wiper wash/delay switch circuit failure	• Wrong position or short circuit to battery detected during wiper test diagnostic routine • Wiring harness concern	Check wiper wash/delay switch for correct operation. Refer to electrical diagrams, check wiper control circuits for short to battery. Repair faults using approved methods and materials. Clear DTC and retest system to ensure correct operation.
B1499	Lamp turn signal left circuit failure	• Left turn signal lamp circuit open circuit or short to ground	Refer to electrical diagrams, check left turn signal circuit for open circuits or short to ground. Repair faults using approved methods and materials. Clear DTC and retest system to ensure correct operation.
B1503	Lamp turn signal right circuit failure	• Right turn signal lamp circuit open circuit or short to ground	Refer to electrical diagrams, check right turn signal circuit for open circuits or short to ground. Repair faults using approved methods and materials. Clear DTC and retest system to ensure correct operation.
B1553	Deck lid release circuit short to battery	• Deck lid release circuit shorted to battery • Wiring harness concern	Refer to electrical diagrams, check deck lid release circuit for short to power. Repair faults using approved methods and materials. Clear DTC and retest system to ensure correct operation.
B1554	Deck lid release circuit short to ground	• Deck lid release circuit shorted to ground • Wiring harness concern	Refer to electrical diagrams, check deck lid release circuit for short to ground. Repair faults using approved methods and materials. Clear DTC and retest system to ensure correct operation.
B2108	Front wiper short to battery	• Wiper motor relay • Wiring harness concern	Inspect from wiper motor relay, replace as required. Refer to electrical wiring circuit diagrams, check wiper relay circuit for short to power. Repair faults using approved methods and materials. Clear DTC and retest system to ensure correct operation.
B2111	Front wiper short to ground	• Wiper motor relay • Wiring harness concern	Inspect from wiper motor relay, replace as required. Refer to electrical wiring circuit diagrams, check wiper relay circuit for short to ground. Repair faults using approved methods and materials. Clear DTC and retest system to ensure correct operation.
B2114	Front washer input short to ground	• Switch stuck or short circuited to ground • wiring harness concern	Check front washer switch operation for sticking. Replace switch as required. Refer to electrical circuit wiring diagrams. Check washer input circuit for short to ground. Repair wiring harness using approved methods and materials. Clear DTC and retest system to confirm correct operation.
B2177	Interior scanning sensor circuit failure	• Interior sensor missing or failed • Wiring harness concern	Check sensor is present and appears undamaged. Refer to electrical circuit wiring diagrams. Check sensor circuit for open circuits, short to power or ground. Replace sensor as required, repair wiring harness using approved methods and materials. Clear DTC and retest system to confirm correct operation.
B2258	Headlamp washer relay circuit short to battery	• Headlamp wash relay fault • Wiring harness concern	Refer to electrical circuit diagrams, check headlamp washer relay circuits for open circuits, short to power or ground. Repair any faults found using approved methods and materials. Replace relay as required. Clear DTC and retest system to confirm correct operation.
B2281	Right turn switch short to ground	• Turn switch faulty • Wiring harness concern	Check right turn switch operation for sticking. Replace switch as required. Refer to electrical circuit wiring diagrams. Check right turn switch input circuit for short to ground. Repair wiring harness using approved methods and materials. Clear DTC and retest system to confirm correct operation.

DTC	Description	Possible Causes	Action
B2282	Left turn switch short to ground	• Turn switch faulty • Wiring harness concern	Check left turn switch operation for sticking. Replace switch as required. Refer to electrical circuit wiring diagrams. Check left turn switch input circuit for short to ground. Repair wiring harness using approved methods and materials. Clear DTC and retest system to confirm correct operation.
B2283	Turn signal chime short to battery	• Wiring harness concern, ECU output to loud speaker in steering column switchgear is short circuit to power	Refer to electrical circuit wiring diagrams. Check ECU output circuit to the steering column speaker for short to power. Repair wiring harness using approved methods and materials. Clear DTC and retest system to confirm correct operation.
B2284	Turn signal chime short to ground	• wiring harness concern, ECU output to loud speaker in steering column switchgear is short circuit to ground	Refer to electrical circuit wiring diagrams. Check ECU output circuit to the steering column speaker for short to ground. Repair wiring harness using approved methods and materials. Clear DTC and retest system to confirm correct operation.
B2287	Inclination sensor circuit failure	• Sensor missing or failed • Wiring harness concern	Inspect vehicle for presence of and condition of inclination sensor. Replace sensor if required. Refer to electrical circuit wiring diagrams. Check inclination sensor circuits for open circuits or short to power or ground. Repair wiring harness using approved methods and materials. Clear DTC and retest system to confirm correct operation.
B2414	Headlamp washer relay circuit short circuit to ground	• Headlamp wash relay internal fault • Wiring harness concern	Check headlamp wash relay for condition, replace as required. Refer to electrical circuit wiring diagrams. Check headlamp washer relay circuits for short to ground. Repair wiring harness using approved methods and materials. Clear DTC and retest system to confirm correct operation.
B2477	Module configuration failure	• ECU configuration issue	The ECU has not been configured or has been configured incorrectly. Use the manufacturer approved diagnostic equipment to configure the ECU correctly then retest to ensure correct operation.
B2494	Anti theft horn output circuit short to battery	• Wiring harness concern	Refer to electrical circuit wiring diagrams. Check anti theft horn output circuit for short to battery. Repair wiring harness using approved methods and materials. Clear DTC and retest system to confirm correct operation.
B2496	Anti theft horn output circuit short to ground	• Wiring harness concern	Refer to electrical circuit wiring diagrams. Check anti theft horn output circuit for short to ground. Repair wiring harness using approved methods and materials. Clear DTC and retest system to confirm correct operation.
B2511	Horn output relay circuit short to battery	• Wiring harness concern	Refer to electrical circuit wiring diagrams. Check vehicle horn output relay circuit for short to battery. Repair wiring harness using approved methods and materials. Clear DTC and retest system to confirm correct operation.
B2555	Dome lamp output circuit short to battery	• courtesy lamp fault • Wiring harness concern	Inspect Dome lamp for defects which may cause a short circuit to power. Replace or repair as required. If no faults are found in the dome lamp itself, check ECU output circuit to dome lamp for shorts to battery. Repair wiring harness using approved methods and materials. Clear DTC and retest system to confirm correct operation.
U1041	SCP (J1850) invalid or missing data for vehicle speed	• Data in the speed signal message is missing or outside of normal limits	Refer to electrical circuit diagrams, check for SCP network wire broken, or short circuit to power or ground. Repair wiring harness using approved materials and methods. Clear DTC and retest system to ensure correct operation.
U1135	SCP (J1850) invalid or missing data for ignition switch/starter	• Data in the ignition signal message is missing or outside of normal limits	Refer to electrical circuit diagrams, check for SCP network wire broken, or short circuit to power or ground. Repair wiring harness using approved materials and methods. Clear DTC and retest system to ensure correct operation.
U1147	SCP (J1850) invalid or missing data for vehicle security	• Data in the security key message is missing or outside of normal limits	Refer to electrical circuit diagrams, check for SCP network wire broken, or short circuit to power or ground. Repair wiring harness using approved materials and methods. Clear DTC and retest system to ensure correct operation.
U1262	SCP (J1850) communication bus fault	• Missing message • Wiring harness concern	Refer to electrical circuit diagrams, check for SCP network wire broken. Repair wiring harness using approved materials and methods. Clear DTC and retest system to ensure correct operation.
B1823	Wiper rear park sense input circuit open	• Rear wiper park sense switch • Wiring harness concern	Rear wiper park sense switch not detected for 4 seconds. Refer to electrical circuit diagrams and check rear wiper circuits for open circuits, short to power or short to ground. Repair wiring harness using approved materials and methods. Clear DTC and retest system to ensure correct operation.
U2514	Missing message for vehicle speed	• Wiring harness concern	Refer to electrical wiring diagrams, Check SCP network for open circuit. Repair wiring harness using approved methods and materials. Clear DTC and retest to ensure correct operation.
B1041	Direction indicator power feed fuse blown	• Power distribution box • Wiring harness concern	Check power distribution box fuses, if blown refer to electrical circuit diagrams and check for short circuits to ground on indicator circuits. Repair wiring harness and fit replacement fuses as required. Clear DTC and retest system to ensure correct operation.
B2090	Remote key entry data line failure	• Wiring harness concern	Refer to electrical circuit diagrams, check RKE data line for short to ground. Repair wiring harness, clear DTC and retest system to ensure correct operation.
B2091	Remote key communication failure	• Wiring harness concern	Refer to electrical circuit diagrams, check RKE data line for short to battery. Repair wiring harness, clear DTC and retest system to ensure correct operation.

Multifunction Electronic Modules - Generic Electronic Module (GEM)

Removal and Installation

Removal

1. CAUTION: Electronic modules are sensitive to static electrical charges. If exposed to these charges, damage may result.

Disconnect the battery ground cable. For additional information, refer to Section 414-01 Battery, Mounting and Cables.

2. Disconnect the generic electronic module (GEM) electrical connectors.

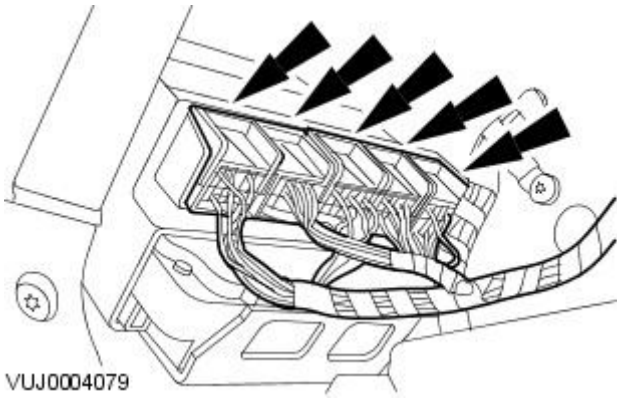

3. Remove the GEM.

1. Press the tang.
2. Remove the GEM

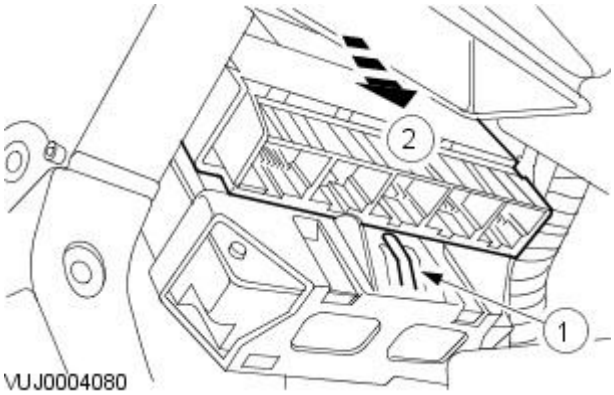

Installation

1. To install, reverse the removal procedure.

Multifunction Electronic Modules - Multifunction Voice Activated Module4-Door

Removal and Installation

Removal

1. CAUTION: Electronic modules are sensitive to static electrical charges. If exposed to these charges, damage may result.

Disconnect the battery ground cable.
For additional information, refer to: Battery Disconnect and Connect (414-01 Battery, Mounting and Cables, General Procedures).

2. Remove the luggage compartment front floor carpet.

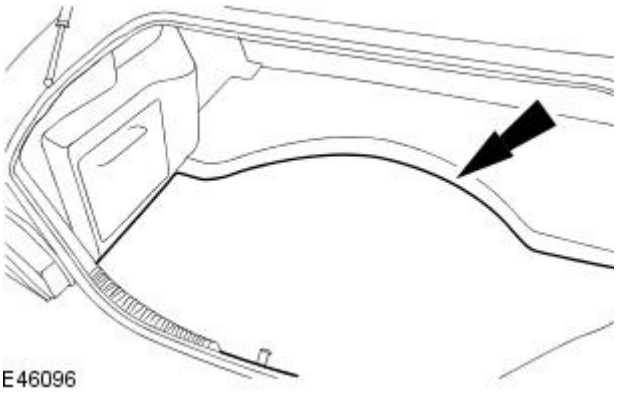

3. Remove the luggage compartment rear floor carpet.

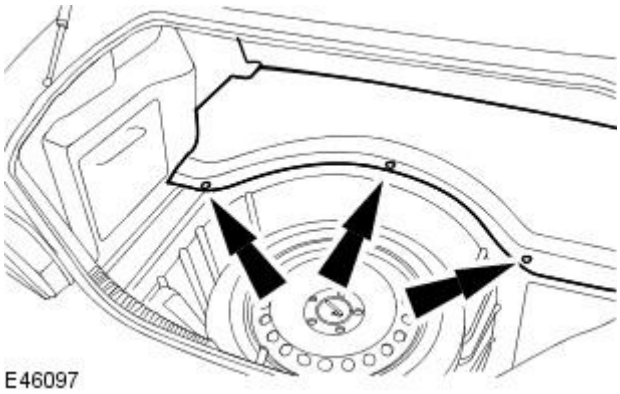

4. Remove the luggage compartment interior trim.

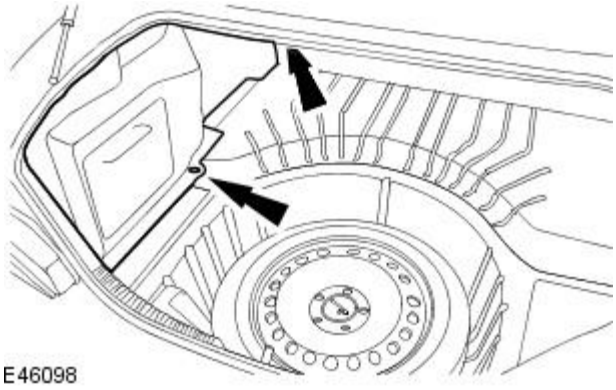

5. Disconnect the voice activated control module (VACM) electrical connector and fibre optic connector.

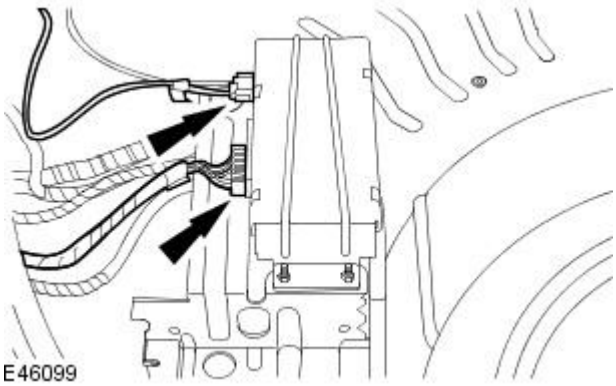

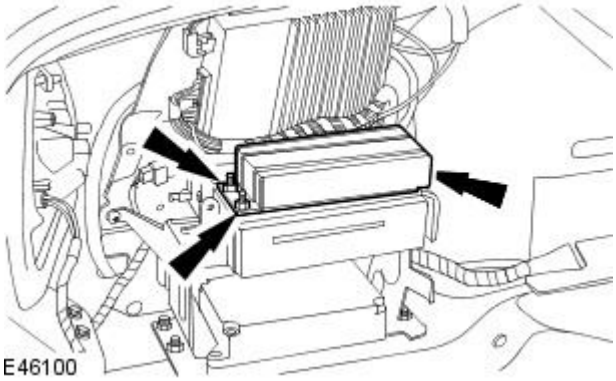

6. Remove the VACM.

Installation

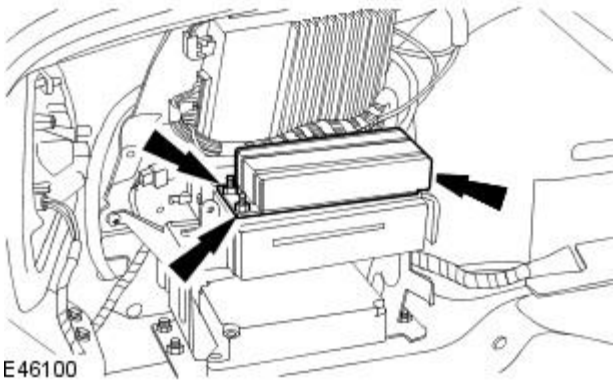

1. To install, reverse the removal procedure.
   - Tighten to 6 Nm.
2. Connect the battery ground cable.
   For additional information, refer to: Battery Connect (414-01 Battery, Mounting and Cables, General Procedures).
3. Configure the voice activated control module using the Jaguar approved diagnostic system.
4. Test the operation to confirm that the correct language is installed, if the language is wrong then replace the voice module for the correct language.
5. Switch the ignition on and wait for the system to initialize. Press the voice button and say the command "Voice Help" list the options given in the feedback.
6. Compare the options given with the vehicle specification if there is an error reconfigure the voice module and repeat steps 4 and 5.

Multifunction Electronic Modules - Multifunction Voice Activated ModuleWagon

Removal and Installation

Removal

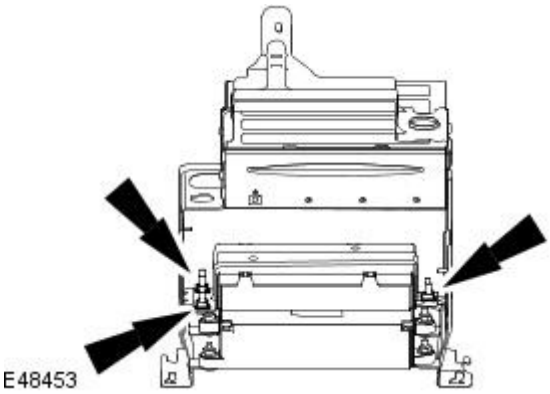

1. Disconnect the battery ground cable
   For additional information, refer to: Battery Disconnect and Connect (414-01 Battery, Mounting and Cables, General Procedures).
2. Remove the Compact Disc changer
   For additional information, refer to: Compact Disc (CD) Changer - Wagon (415-01 Audio Unit, Removal and Installation).
3. Remove the voice activated control module.

Installation

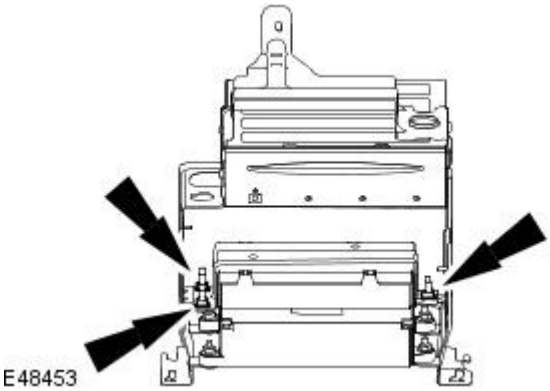

1. To install, reverse the removal procedure.
   - Tighten to 5 Nm.
2. Connect the battery ground cable
   For additional information, refer to: Battery Connect (414-01 Battery, Mounting and Cables, General Procedures).

Published: 11-May-2011

Front End Body Panels - Front End Body Panels

Description and Operation

Front Bumper Assembly and Undertray

The front body structure is designed to satisfy bumper impact requirements and primarily comprises the front bumper assembly which is fully described inSection 501-19 Bumpers.

An undertray is fitted to assist air flow through the cooling pack. It is secured to the bottom of the bumper casing and the body front cross-member.

Hood

The hood assembly consists of a one piece inner and outer panel, clinched and bonded together with a bead sealant applied to each clinch joint. The hood opens from the front and is secured by means of a double catch in the hood latch.

Plenum Cover and Front Seals

Protective GMT liners fitted in the wheel arches each incorporate a readily detachable panel for access to the spot lamp assembly. An injection molded plenum cover is secured to the bodywork by securing clips. The plenum cover gives easy access to the windscreen wiper components and the ventilation system pollen filter.

Front End Body Panels - Air Deflector2.0L Duratorq-TDCi/2.2L Duratorq-TDCi (110kW/150PS) - Puma

Removal and Installation

Removal

All vehicles

1. Raise and support the vehicle.
   For additional information, refer to: Lifting (100-02 Jacking and Lifting, Description and Operation).

Vehicles with 2.0L diesel engine

2. Remove the air deflector.

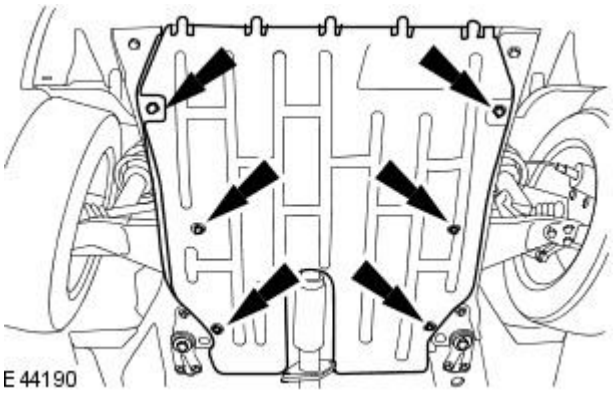

Vehicles with 2.2L diesel engine

3. Remove the air deflector.

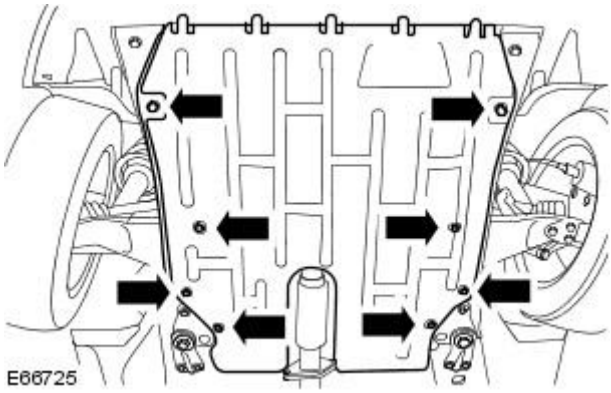

Installation

1. To install, reverse the removal procedure.

Front End Body Panels - Cowl Vent Screen

Removal and Installation

Removal

All vehicles

1. Remove the wiper arms and blades.
   For additional information, refer to: Wiper Pivot Arm (501-16 Wipers and Washers, Removal and Installation).

Vehicles built up to VIN:E43868

2. Remove the cowl vent screen.

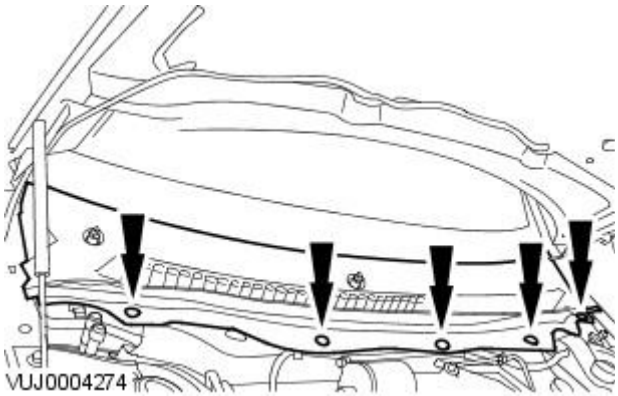

Vehicles built from VIN:E43869

3. Remove the cowl vent screen heatshield.

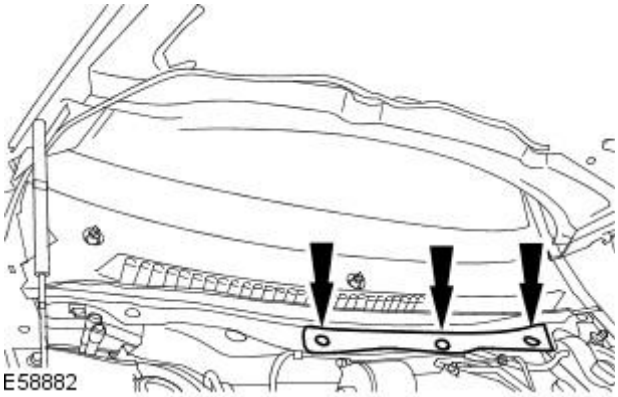

4. Remove the cowl vent screen.

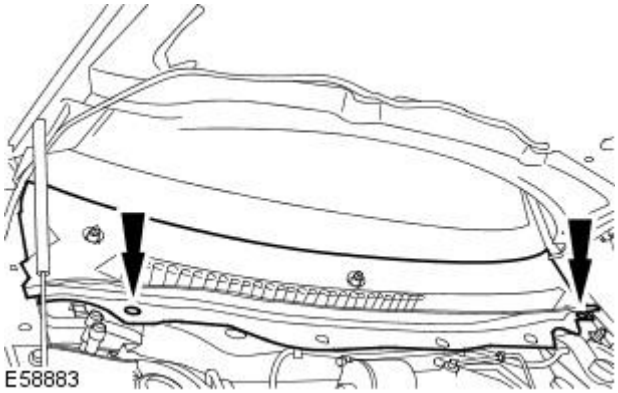

Installation

1. To install, reverse the removal procedure.

Front End Body Panels - Fender Splash Shield

Removal and Installation

Removal

1. Remove the wheel and tire assembly. For additional information, refer toSection 204-04 Wheels and Tires.
2. Remove the wheel arch liner access cover.

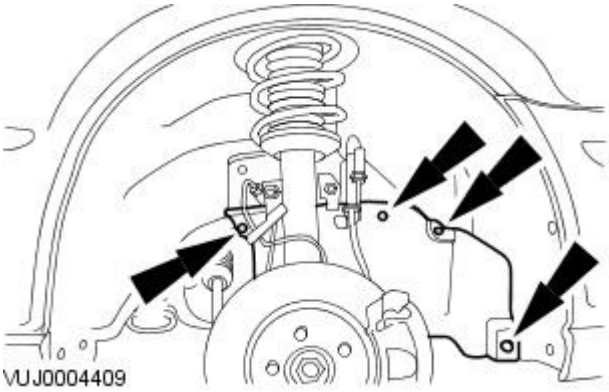

3. Remove wheel arch liner.

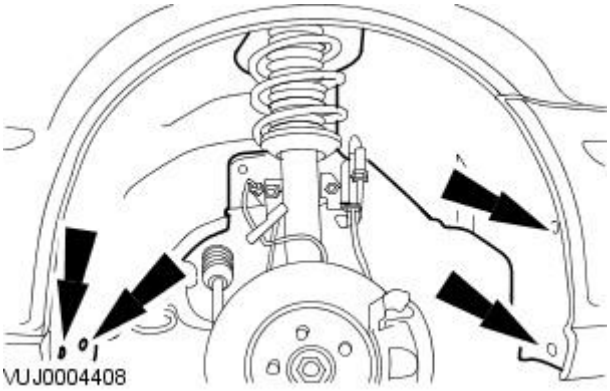

Installation

1. To install, reverse the removal procedure.

Front End Body Panels - Radiator Splash Shield

Removal and Installation

Removal

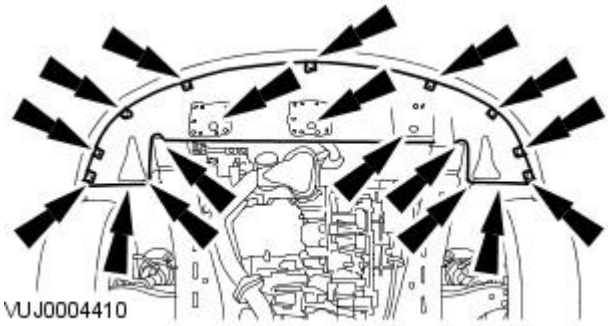

1. Raise and support the vehicle. For additional information, refer toSection 100-02 Jacking and Lifting.
2. Remove undertray assembly.

Installation

1. To install, reverse the removal procedure.

Published: 11-May-2011

Body Closures -

Torque Specifications

Description	Nm	lb-ft	lb-in
Door hinge bolt - hinge to body	35	26	–
Door hinge bolt - hinge to door	47	35	–
Door hinge grub screw	18	13	–
Door checkstrap to body	35	26	–
Door checkstrap to door	6	–	53
Door striker plate screw	25	18	–
Luggage compartment lid hinge - hinge to lid nuts	25	18	–
Luggage compartment lid hinge - hinge to body bolts	25	18	–
Luggage compartment lid striker plate	10	7	–
Hood hinge screw	20	15	–

Published: 11-May-2011

Body Closures - Body Closures

Description and Operation

Doors

The passenger compartment doors each comprise of an inner and outer panel, clinched and bonded together to form a door assembly. Both panels incorporate extensions spot welded together to form a cheater assembly and a sealant is applied in cosmetic bead form to all clinch joints.

The doors are of a conventional latch to striker plate design with the strikers located on the body pillars.

A joint-less single profile bulb seal is installed on each door together with a water shedder and separate vacuum formed speaker cup. Upper and lower door hinges and multi-stage checkstraps require no lubrication throughout vehicle life.

Luggage Compartment Lid

The luggage compartment lid comprises of an inner and outer panel clinched and bonded together to form a complete assembly. A cosmetic bead sealant is applied to all clinch joints.

Hinge reinforcements and a latch striker mounting reinforcement are attached to the lid inner panel and a combined hinge and gas strut mounting assemblies are secured by bolts and nuts to the inner panel and the luggage compartment flange at each side.

The luggage compartment lid utilizes a conventional lock to striker plate design, with the striker located centrally on the edge of the load space floor.

Body Closures - Door Alignment

General Procedures

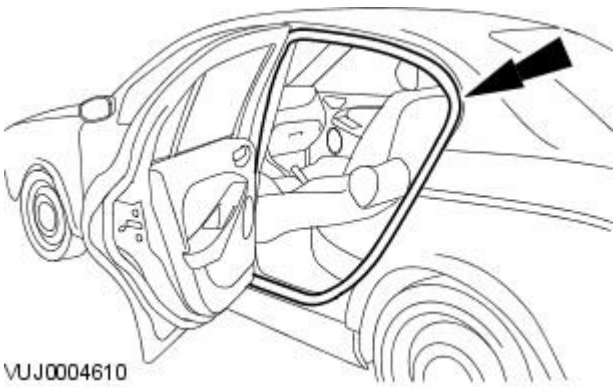

1. NOTE: Rear door shown, front door similar.

Remove the rear door aperture seal.

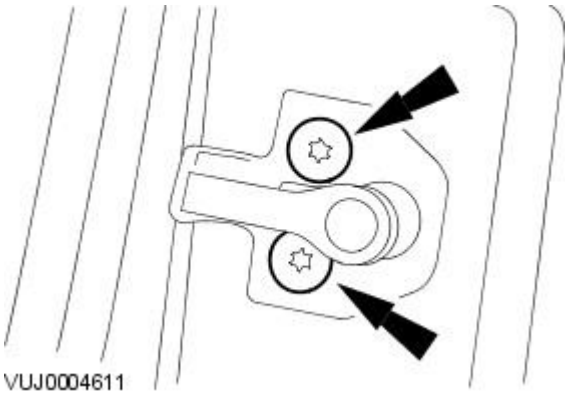

2. Remove the striker plate.

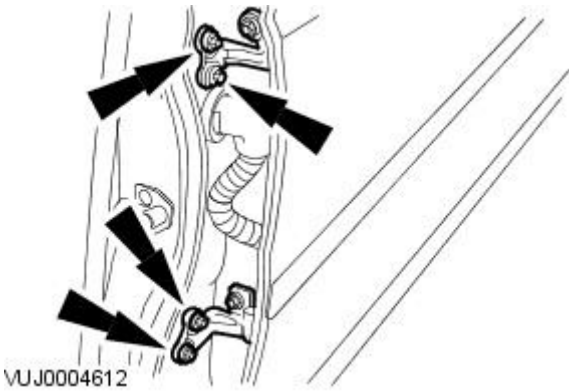

3. Loosen the door hinge bolts.

4. NOTE: Initial door fitting, set the front door 4 mm or the rear door 3 mm higher than nominal.

Set the door to the correct alignment.

5. Tighten the door hinge bolts.

- Tighten to 47 Nm.

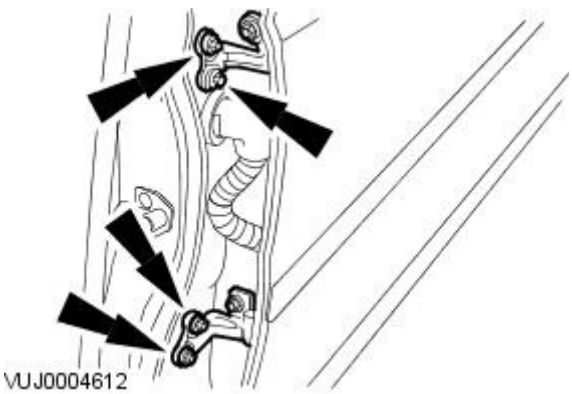

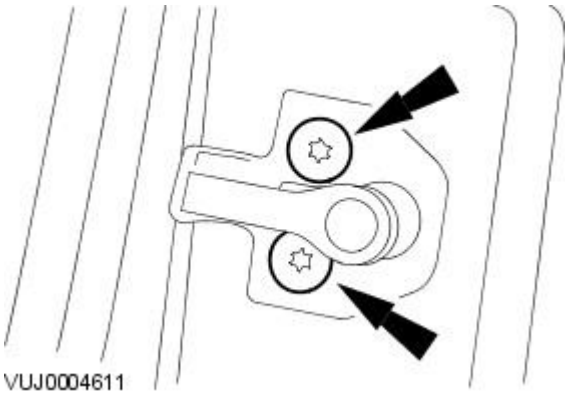

6. Install the striker plate.

- Tighten to 25 Nm.

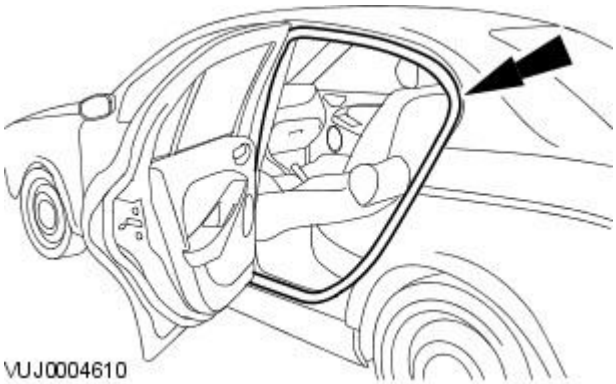

7. Install the rear door aperture seal.

Body Closures - Hood Alignment

General Procedures

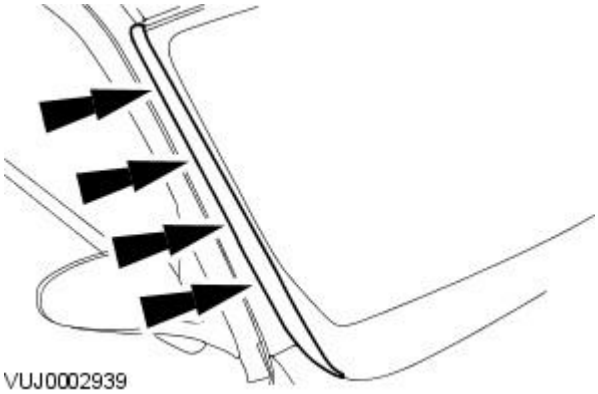

1. Remove the hood latch. For additional information, refer toSection 501-14 Handles, Locks, Latches and Entry Systems.
2. NOTE: Right hand shown, left hand similar.

   Remove the A-pillar exterior trim.

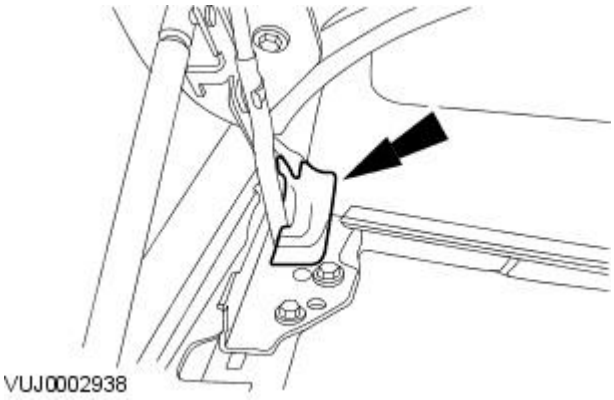

3. NOTE: Right hand shown, left hand similar.

   Remove the lower A-pillar drainage channel.

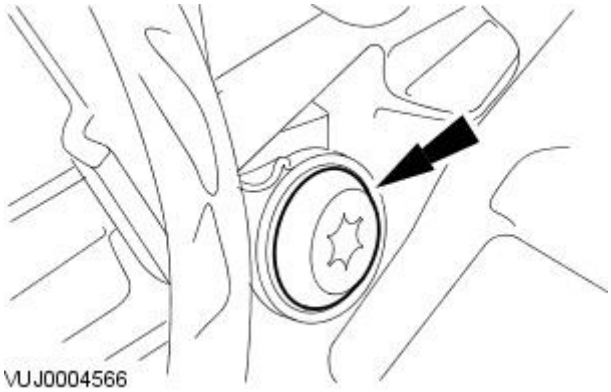

4. Loosen the hood hinge screws to 3-5 Nm.

5. Pull up/push down on hood.

6. Set hood to the correct alignment.

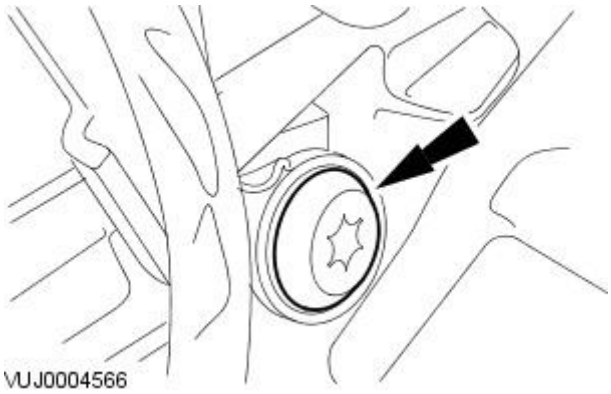

7. Tighten the hood hinge screws to 20 Nm.

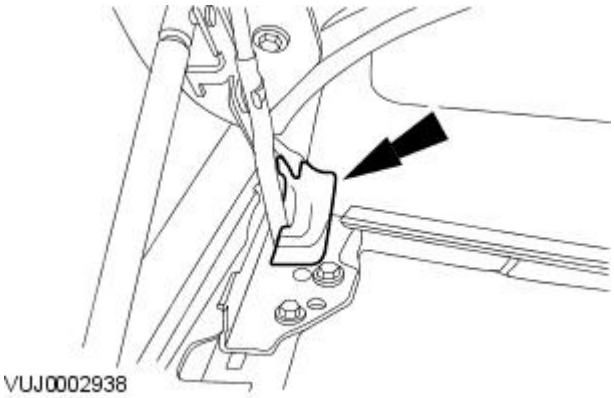

8. NOTE: Right hand shown, left hand similar.

Install the lower A-pillar drainage channel.

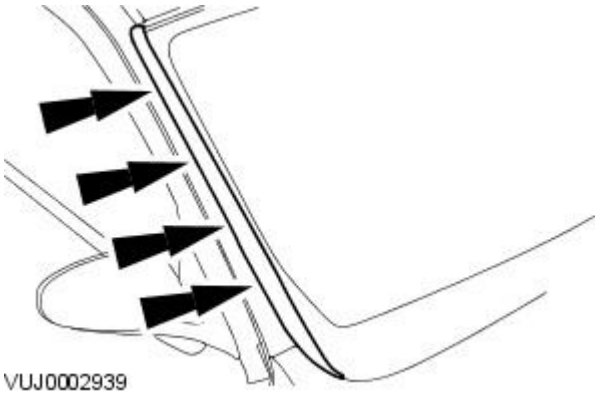

9. NOTE: Right hand shown, left hand similar.

Install the A-pillar exterior trim.

10. Install the hood latch. For additional information, refer toSection 501-14 Handles, Locks, Latches and Entry Systems.

Body Closures - Liftgate Alignment

General Procedures

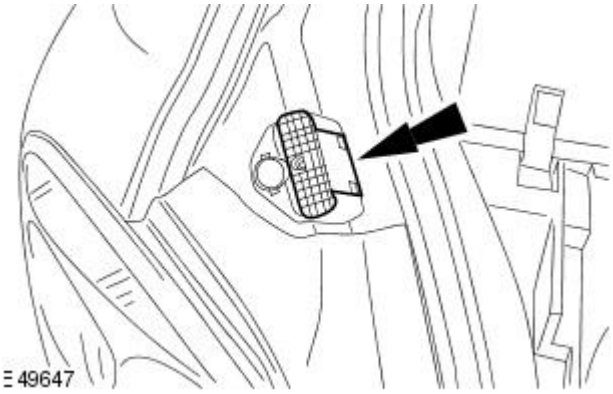

1. Open the liftgate.
2. NOTE: Left-hand shown, right-hand similar.

   Adjust both liftgate bump stops counter-clockwise to their fully seated position.

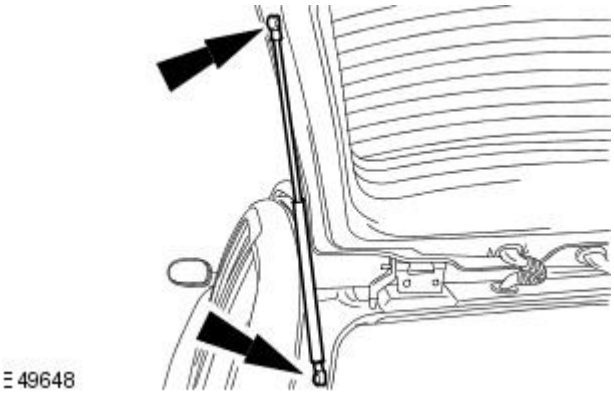

3. Remove the loadspace scuff plate trim panel.
   For additional information, refer to: Loadspace Scuff Plate Trim Panel (501-05 Interior Trim and Ornamentation, Removal and Installation).
4. NOTE: Left-hand shown, right-hand similar.

   Remove both the liftgate gas struts.

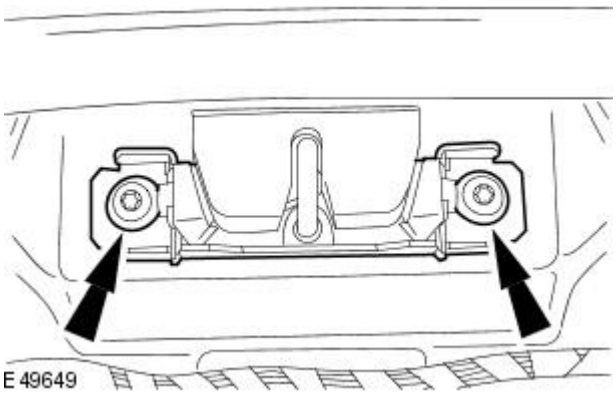

5. Close the liftgate.
6. Open the liftgate window glass.
7. Loosen the liftgate striker retaining bolts.

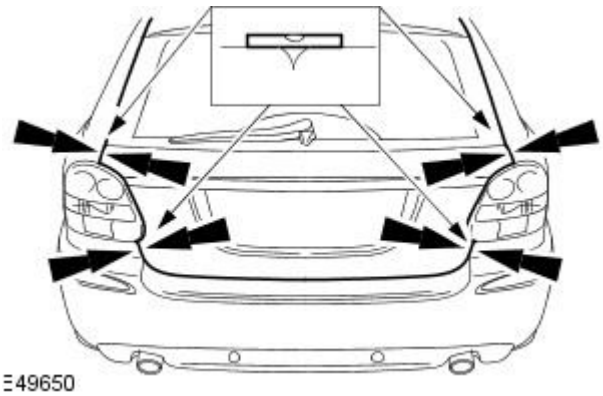

8. NOTE: Make sure the liftgate aligns flush to the rear quarter panels and rear bumper.

   Set the alignment of the liftgate to the rear quarter panels and rear bumper cover.

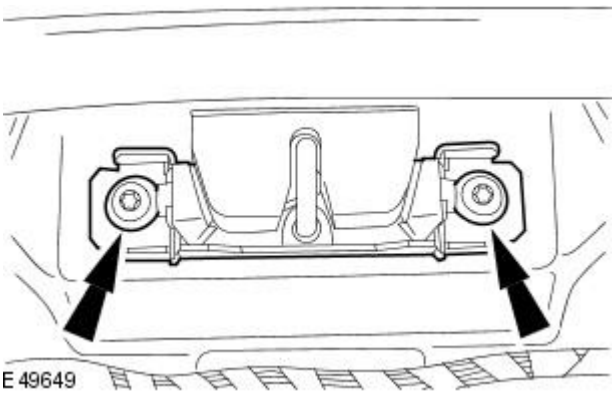

9. Tighten the liftgate striker retaining bolts.

- Tighten to 25 Nm.

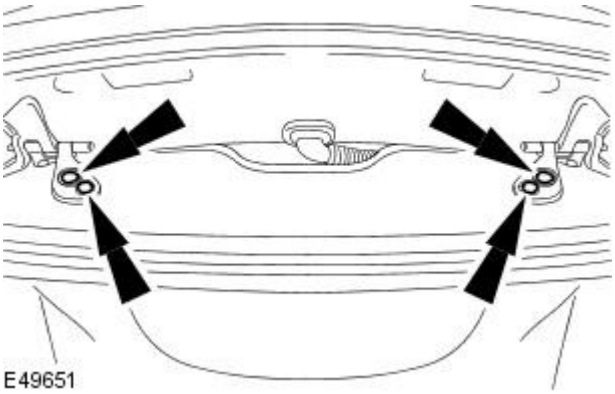

10. Loosen the upper liftgate hinge retaining bolts.

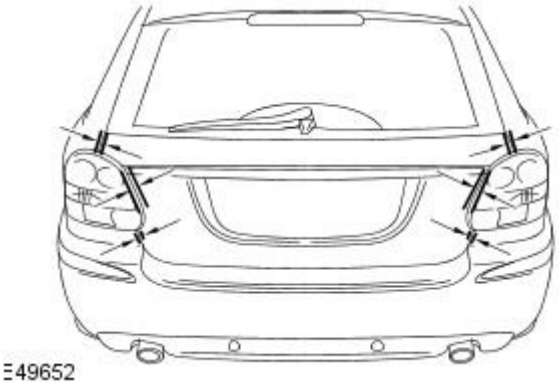

11. NOTE: Make sure the gap between the liftgate and the rear quarter panels, rear lamp assemblies and rear bumper cover are equal.

Set the liftgate gaps to the rear quarter panels, rear lamp assemblies and the rear bumper cover.

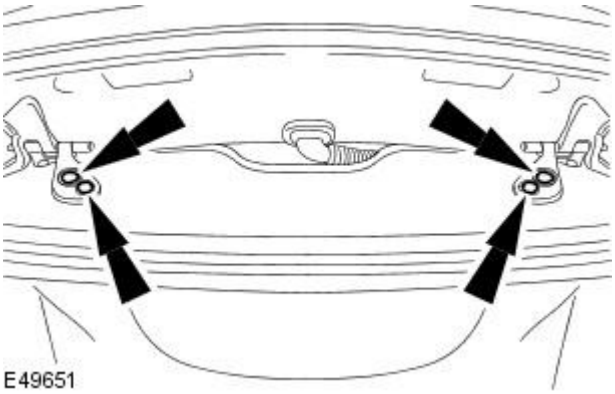

12. Tighten the liftgate hinge retaining bolts.

- Tighten to 25 Nm.

13. Open the liftgate.

14. NOTE: Left-hand shown, right-hand similar.

Loosen both the lower liftgate hinge retaining bolts.

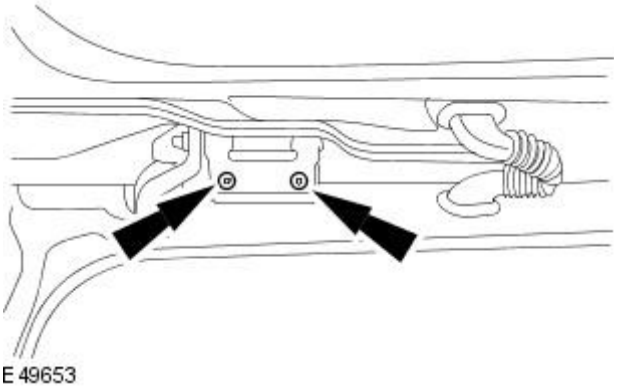

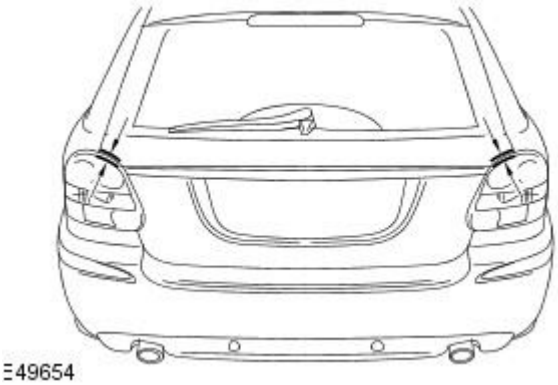

15. NOTE: Make sure the gaps between the liftgate and rear lamp assemblies are equal on both sides.

Set the liftgate gaps to the rear lamp assemblies.

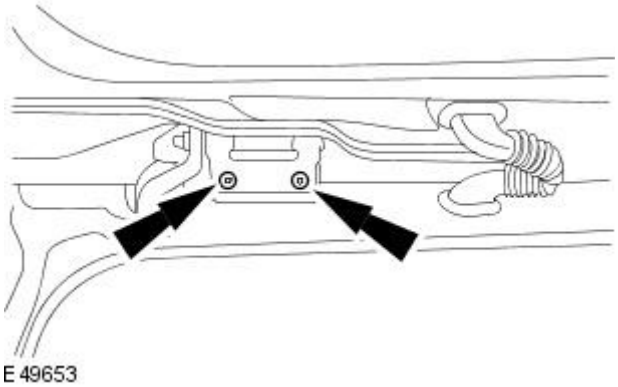

16. Tighten the lower liftgate hinge retaining bolts.

- Tighten to 14 Nm.

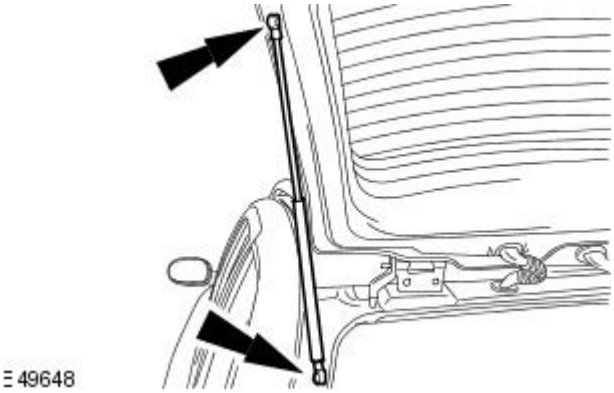

17. NOTE: Left-hand shown, right-hand similar.

Install both liftgate gas struts.

18. Install the loadspace scuff plate trim panel.
For additional information, refer to: Loadspace Scuff Plate Trim Panel (501-05 Interior Trim and Ornamentation, Removal and Installation).

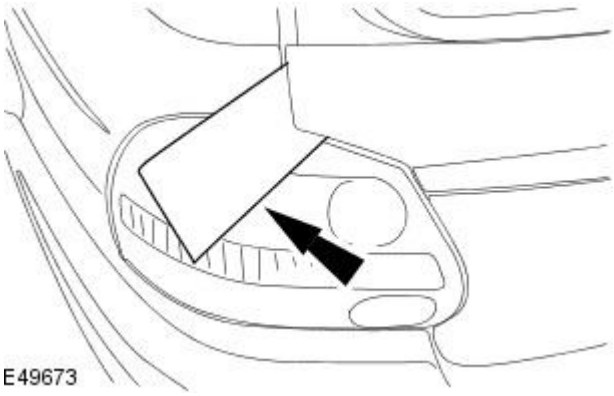

19. CAUTION: Do not over adjust the liftgate bump stops. Failure to follow this instruction may result in damage to the component.

• NOTE: Left-hand shown, right-hand similar.

Using a suitable piece of paper check the clearance between the liftgate bump stops and the liftgate, if the paper can be removed with ease adjust the liftgate bump stops counter-clockwise equally until the paper is lightly clamped between the bump stops and liftgate.

20. Close the liftgate.

21. NOTE: Check the liftgate window glass adjustment. If the liftgate window glass adjustment is correct, no further adjustment is required.

Close the liftgate window glass.

22. Make sure the rear wiper pivot arm is in the parked position.

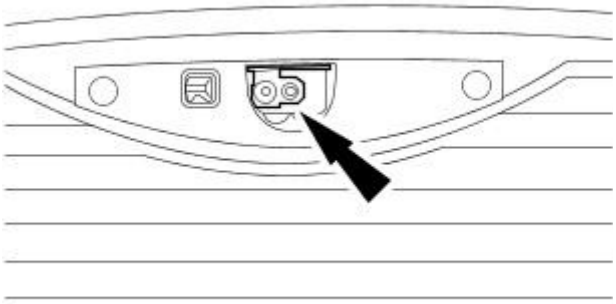

E49816

23. Open the liftgate window glass.

24. Open the liftgate.

25. Remove the liftgate trim panel.
For additional information, refer to: Liftgate Trim Panel (501-05 Interior Trim and Ornamentation, Removal and Installation).

26. Loosen the rear wiper motor retaining nuts.

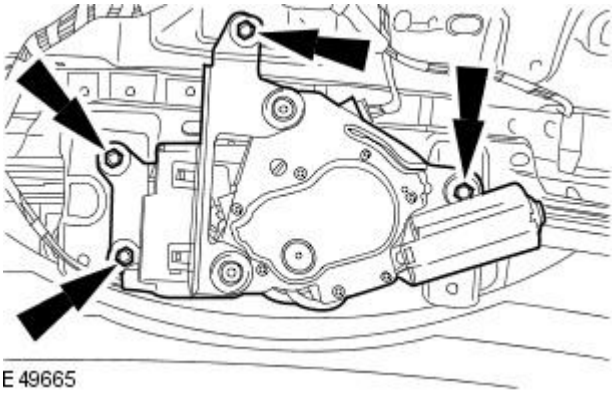

E49665

27. Close the liftgate.

28. Make sure the liftgate glass latch and rear wiper mounting arm locate correctly into the liftgate latch actuator and rear wiper motor.

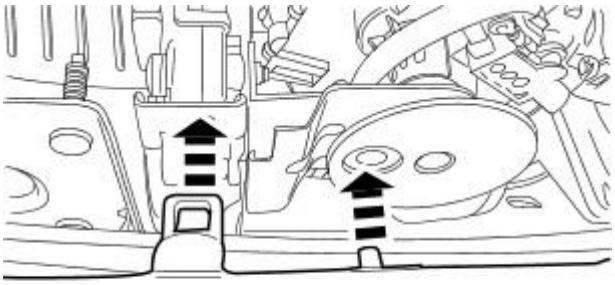

E49656

29. Close the liftgate glass.

30. CAUTIONS:

With the aid of an assistant in the loadspace, fully tighten the rear wiper motor retaining nuts. Failure to follow this instruction may result in damage to the vehicle.

Make sure the rear wiper motor does not move whilst tightening the retaining nuts. Failure to follow this instruction may result in damage to the vehicle.

Tighten the rear wiper motor retaining nuts in the sequence shown.

- Tighten to 8 Nm.

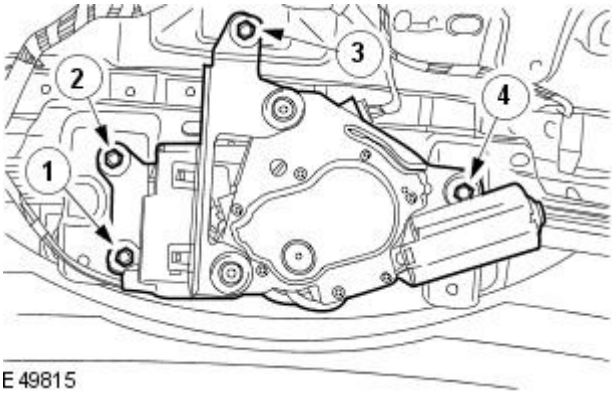

E49815

31. Visually check the liftgate for correct alignment.

32. Install the liftgate trim panel.
For additional information, refer to: Liftgate Trim Panel (501-05 Interior Trim and Ornamentation, Removal and Installation).

Body Closures - Luggage Compartment Lid Alignment

General Procedures

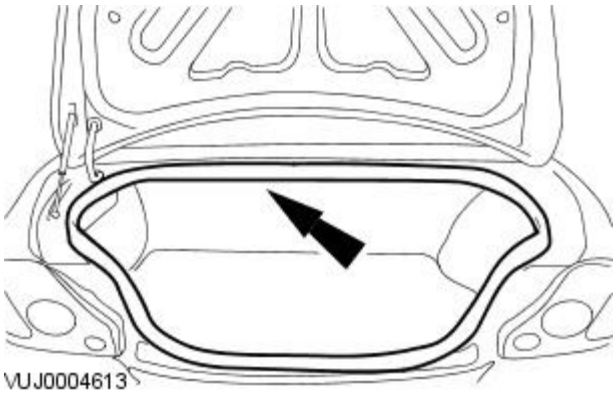

1. Remove the luggage compartment lid aperture seal.

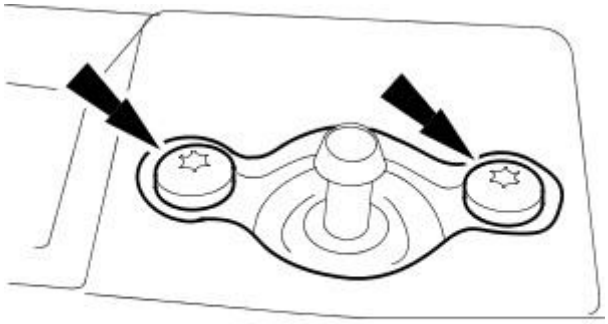

2. Remove the striker plate.

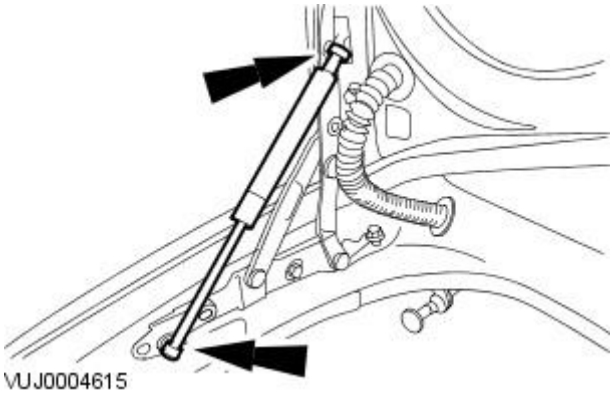

3. NOTE: Left hand shown, right hand similar.

Remove the gas strut.

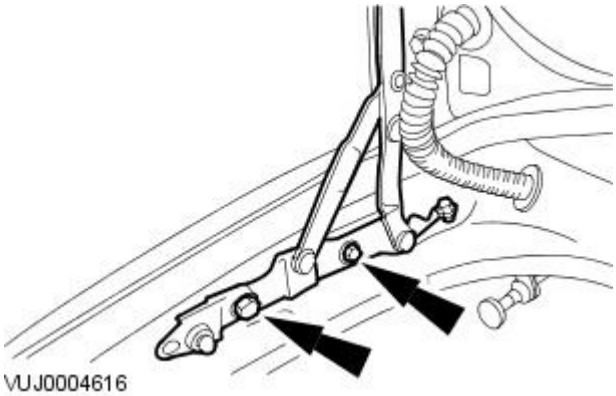

4. NOTE: Left hand shown, right hand similar.

Loosen the luggage compartment lid hinge bolts.

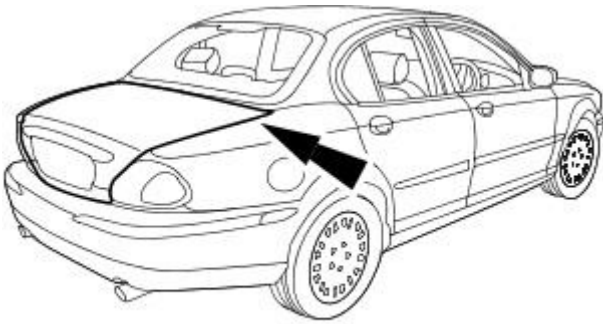

VUJ0004617

5. Pull up/push down on luggage compartment lid.

6. NOTE: Set the alignment to 2 mm lower than nominal.

Set the luggage compartment lid alignment.

7. Tighten the luggage compartment lid hinge bolts.

- Tighten to 25 Nm.

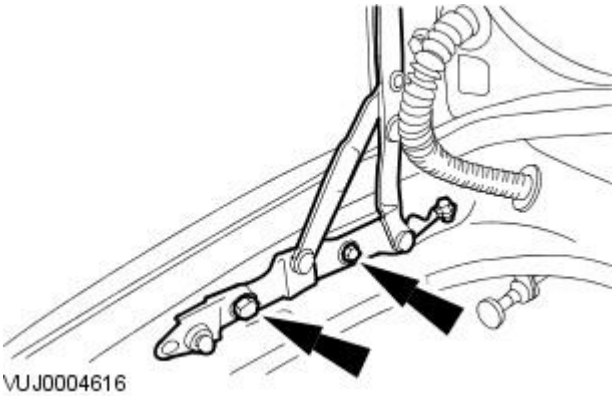

VUJ0004616

8. Adjust the luggage compartment lid stop screw.

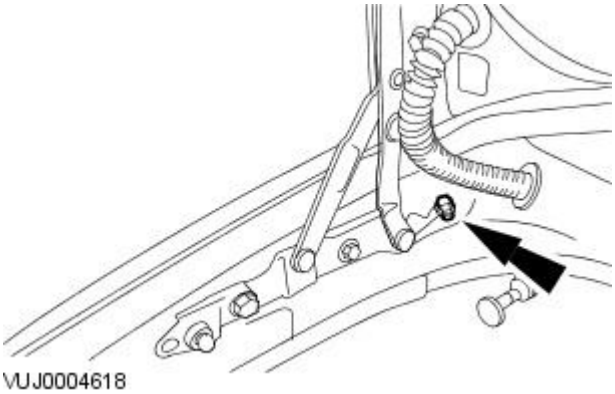

VUJ0004618

9. Install the gas struts.

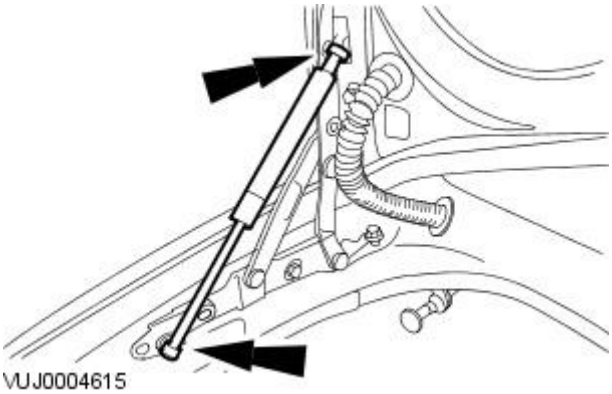

VUJ0004615

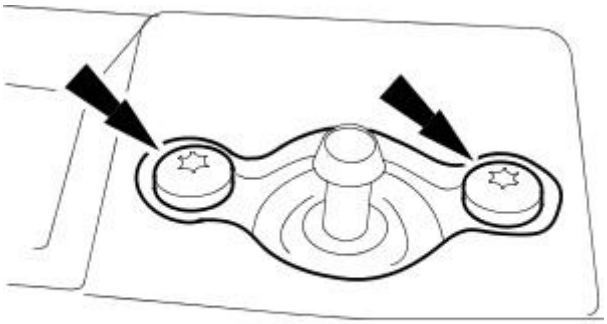

VUJ0004614

10. Install the striker plate.

- Tighten to 10 Nm.

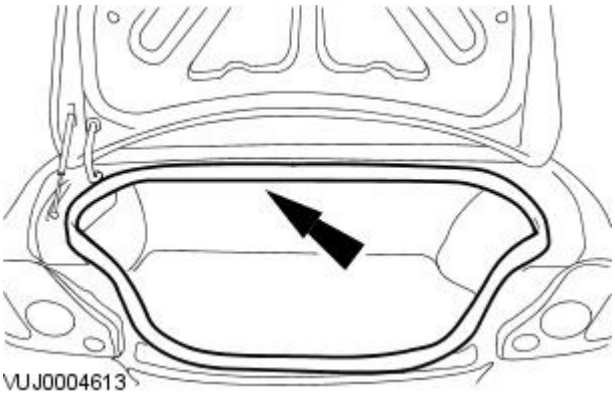

VUJ0004613

11. Install the luggage compartment lid aperture seal.

Body Closures - Weatherstrip

Removal and Installation

Removal

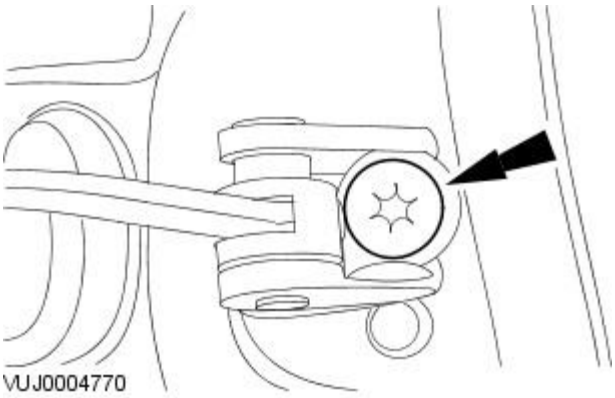

1. NOTE: Front door shown, rear door similar.

Detach the door checkstrap.

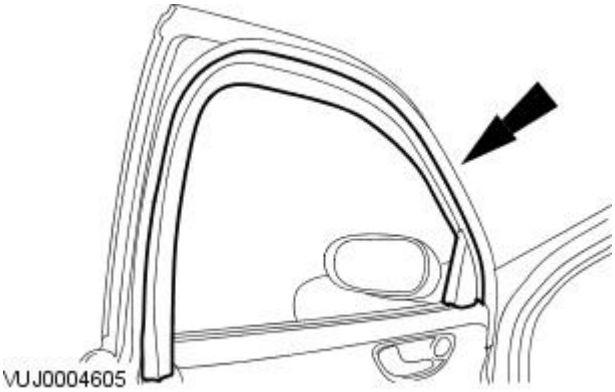

2. Remove the window aperture trim.

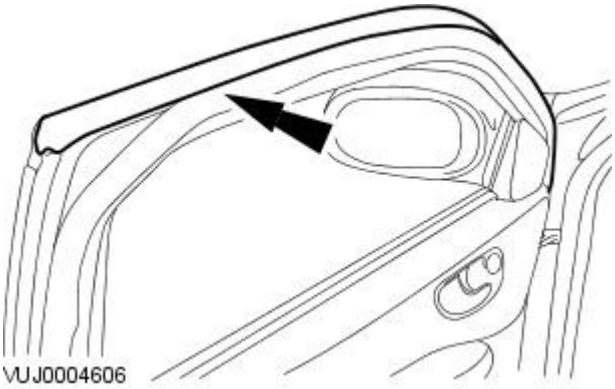

3. Remove the frame seal.

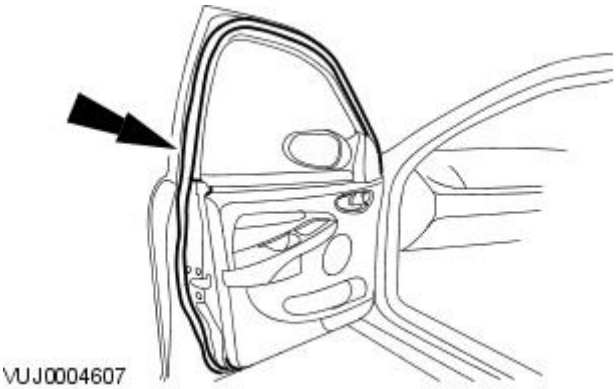

4. NOTE: A start point locator can be found on each weatherstrip in the form of a dot. The start point is on the 'B' Post corner of the door. Using an indelible marker record the start point.

Using an indelible marker, trace around the door weatherstrip.

5. Remove the door weatherstrip.

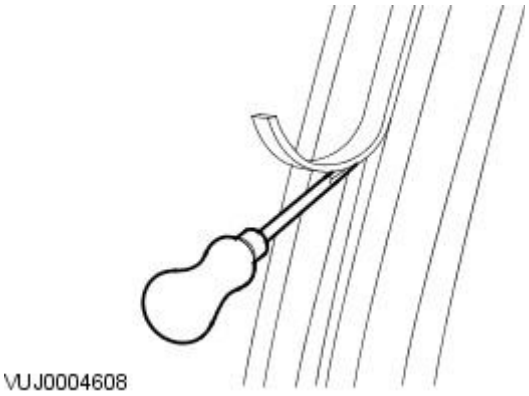

6. Using a suitable tool remove any residual adhesive from the door.

Installation

1. NOTE: Door weatherstrips are identified by a color coded dot which is also the start point. The right hand front door is red, the left hand front door is yellow, the right hand rear door is green and the left hand rear door is blue.

- NOTE: Make sure the indelible mark is not removed.

Make sure the weatherstrip mounting surface is clean using a suitable solvent and dry with a lint free cloth.

2. NOTE: Align the start point locator to the previously recorded start point.

Install the door weatherstrip.

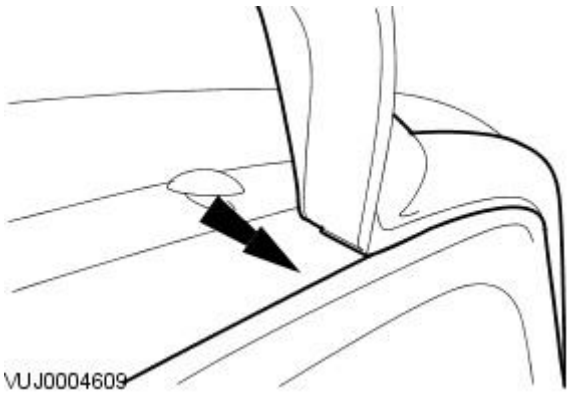

3. Using a suitable solvent, remove the indelible marks.

4. Install the frame seal.

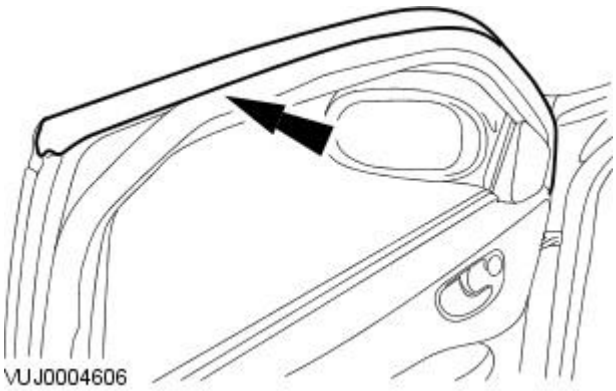

5. Install the window aperture trim.

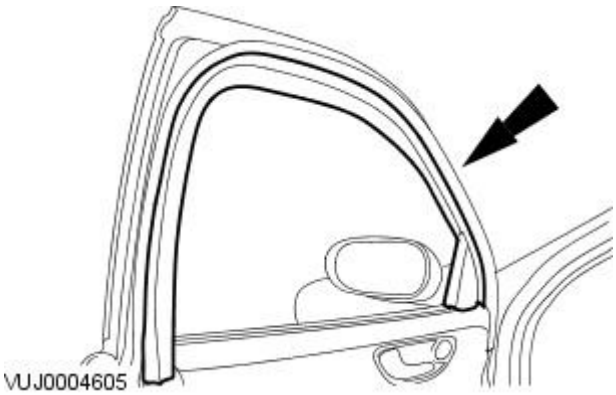

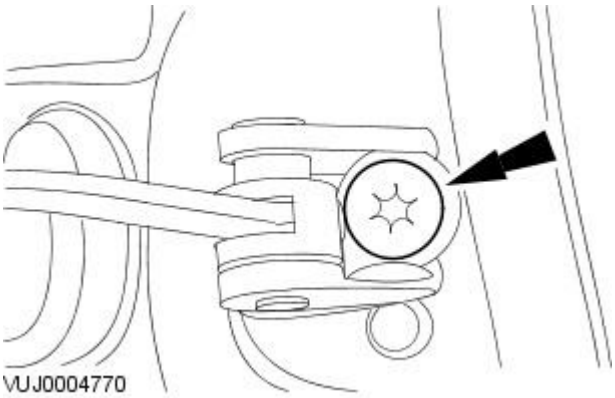

6. Install the door check strap.

- Tighten to 35 Nm.

Published: 11-May-2011

Interior Trim and Ornamentation -

Torque Specifications

Description	Nm	lb-ft	lb-in
Seat belt anchoring bolt	55	41	–
Loadspace retaining hook - Wagon	8	–	71

Published: 11-May-2011

Interior Trim and Ornamentation - Interior Trim

Description and Operation

This section covers removal and installation of the interior moldings and trim panels. In many instances, one component overlaps another component. If this condition is found, it will be necessary to loosen or remove the overlapping component before removal, to prevent damage to either component.

The headliner is a one-piece design covering the entire interior of the roof and is made of a molded composite with cloth covering. Finger depressions give pull-down access for the sun visors and passenger assist handles are provided.

Interior Trim and Ornamentation - A-Pillar Trim Panel

Removal and Installation

Removal

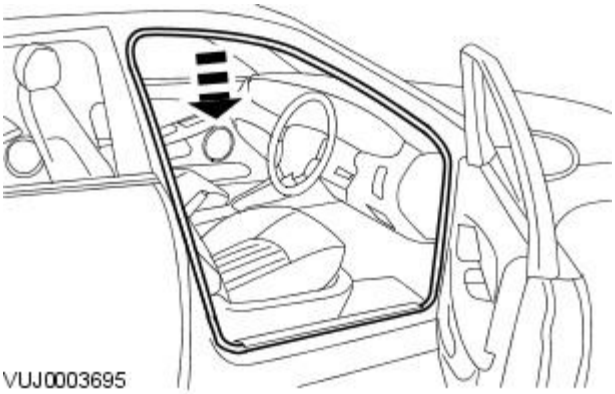

1. Detach the front door opening weather-strip.

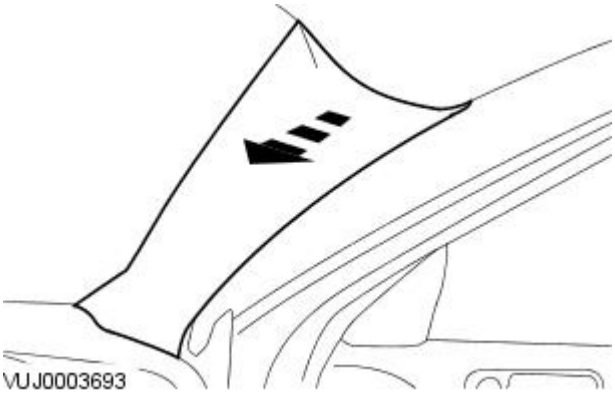

2. NOTE: The A-pillar trim panel is secured to the top of the A-pillar by a retaining strap. The retaining strap must be detached from the A-pillar before the A-pillar trim panel is removed.

Detach the A-pillar trim panel.

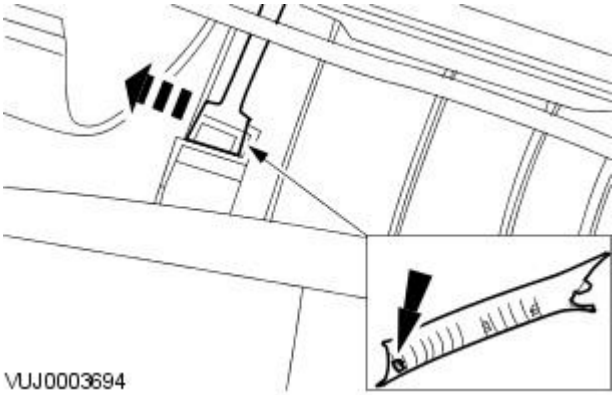

3. Remove the A-pillar trim panel.

Installation

1. To install, reverse the removal procedure.

Published: 11-May-2011

Interior Trim and Ornamentation - B-Pillar Lower Trim Panel

Removal and Installation

Removal

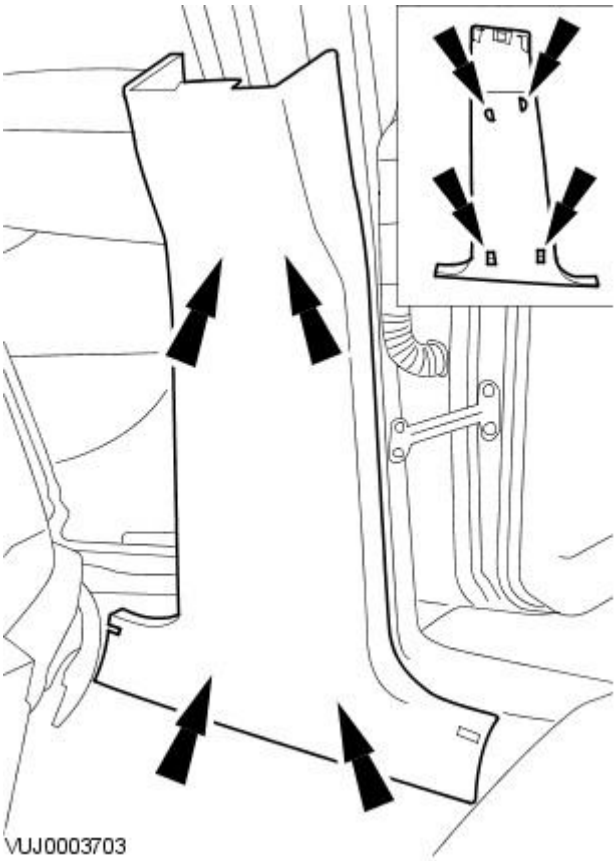

1. Remove the front scuff plate trim panel. For additional information, refer to Scuff Plate Trim Panel—Front.
2. Remove the rear scuff plate trim panel. For additional information, refer to Scuff Plate Trim Panel—Rear.
3. Remove the B-pillar upper trim panel. For additional information, refer to B-Pillar Trim Panel—Upper.
4. Remove the B-pillar lower trim panel.

Installation

1. To install, reverse the removal procedure.

Interior Trim and Ornamentation - B-Pillar Upper Trim Panel

Removal and Installation

Removal

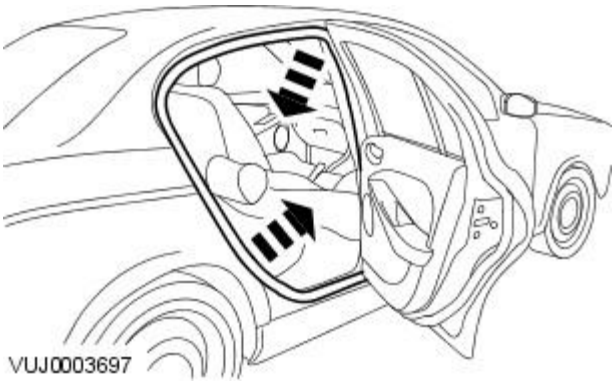

1. Detach the rear door opening weather-strip.

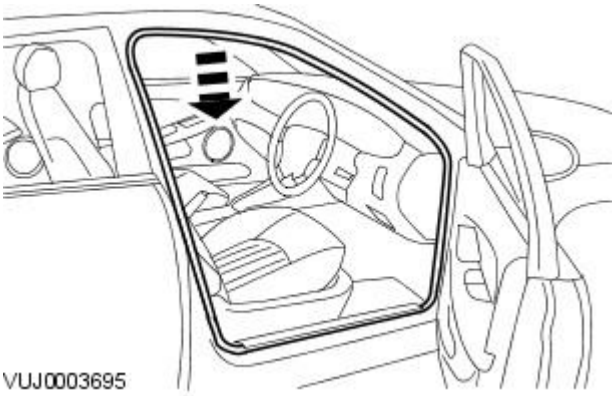

2. Detach the front door opening weather-strip.

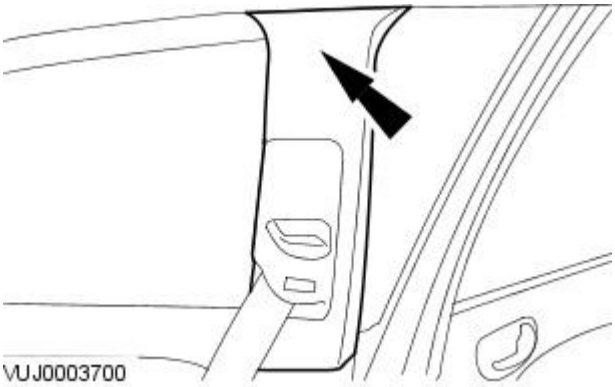

3. Detach the B-Pillar upper trim panel.

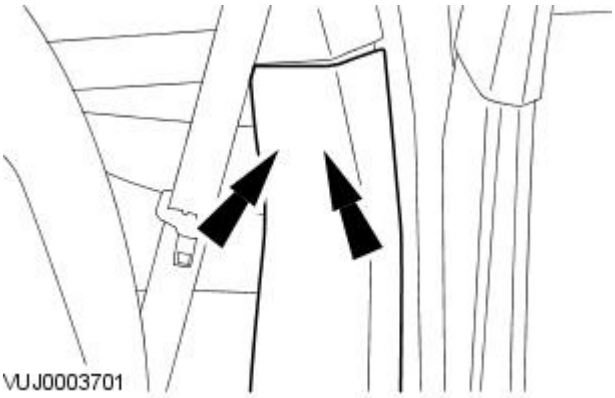

4. Detach the B-pillar lower trim panel.

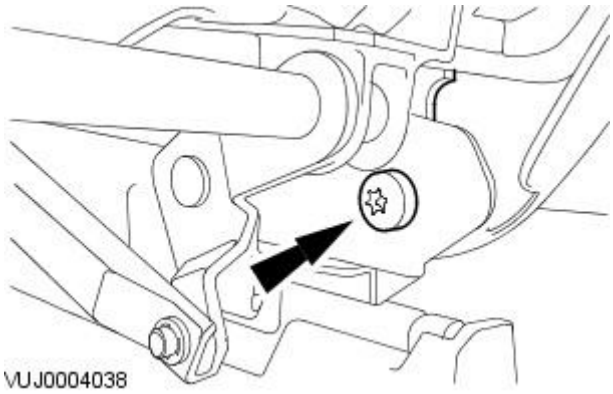

5. Detach the safety belt lower anchor from the underside of the seat.

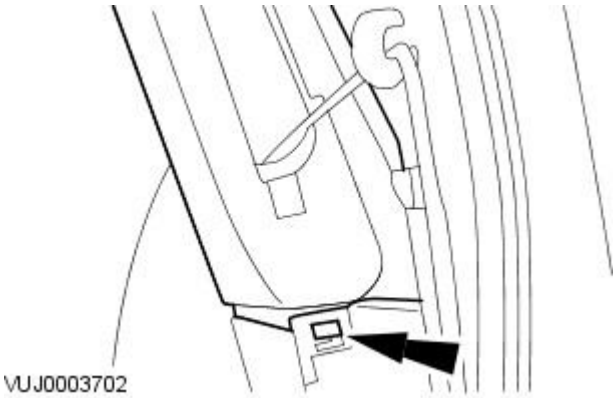

6. Remove the B-pillar upper trim panel.

Installation

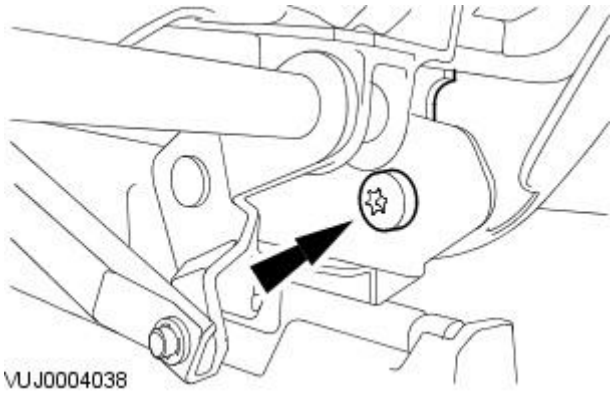

1. To install, reverse the removal procedure.

- Tighten to 55 Nm.

Interior Trim and Ornamentation - Cowl Side Trim Panel

Removal and Installation

Removal

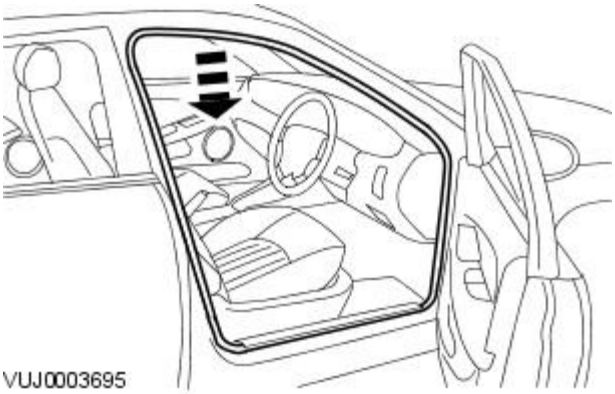

1. Detach the front door opening weather-strip.

2. Remove the front scuff plate trim panel. For additional information, refer to Scuff Plate Trim Panel—Front.
3. Remove the cowl side trim panel.

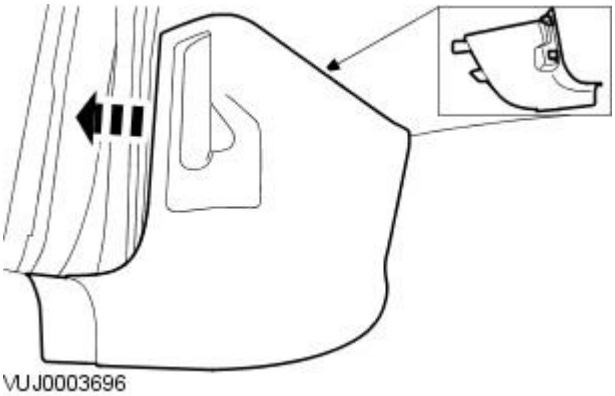

Installation

1. To install, reverse the removal procedure.

Interior Trim and Ornamentation - C-Pillar Trim Panel4-Door

Removal and Installation

Removal

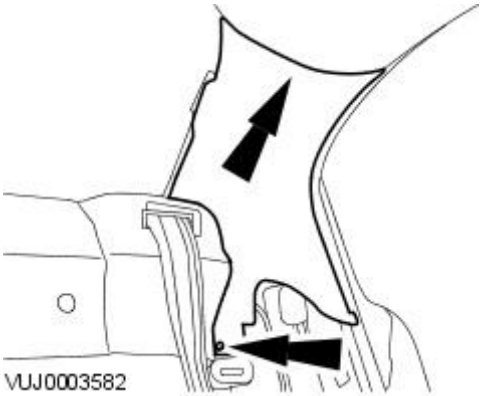

1. Remove the rear seat side bolster. For additional information, refer to Section 501-10 Seating.
2. NOTE: The C-pillar trim panel is secured to the top of the C-pillar by a retaining strap. The retaining strap must be detached from the C-pillar before the C-pillar trim panel is removed.

   Detach the C-pillar trim panel.

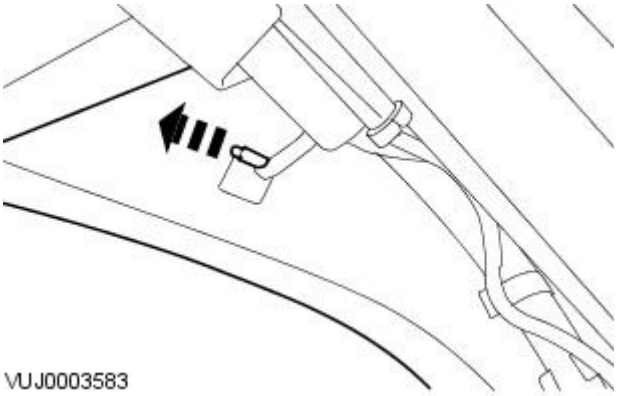

3. Remove the C-pillar trim panel.

Installation

1. To install, reverse the removal procedure.

Interior Trim and Ornamentation - C-Pillar Trim PanelWagon

Removal and Installation

Removal

1. Remove the loadspace cover.
2. Fold down the rear seat backrest.
3. Detach the loadspace cover retaining bracket finisher trim.

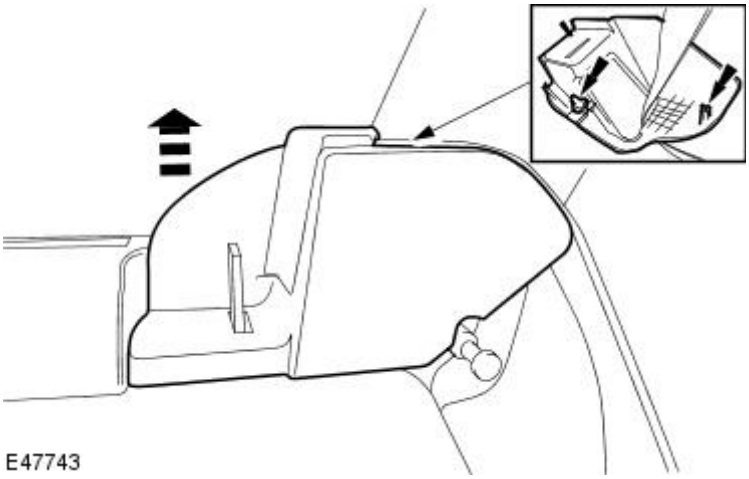

4. Reposition the rear seat bolster.
   1. Press the tang.
   2. Reposition the rear seat bolster.

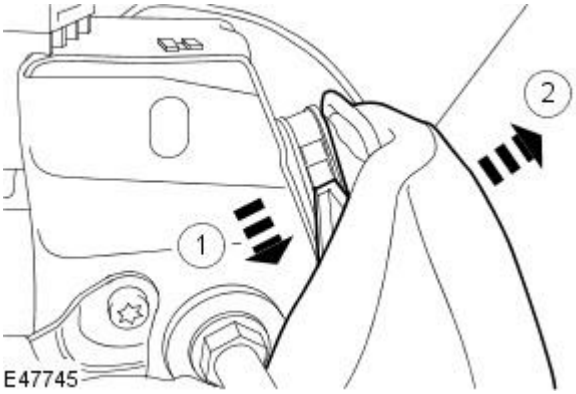

5. Remove the seat bolster upper retaining latch.

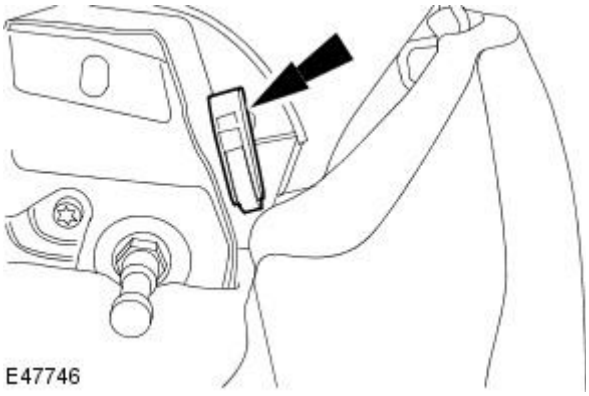

6. Remove the C-pillar trim panel lower retaining screw.

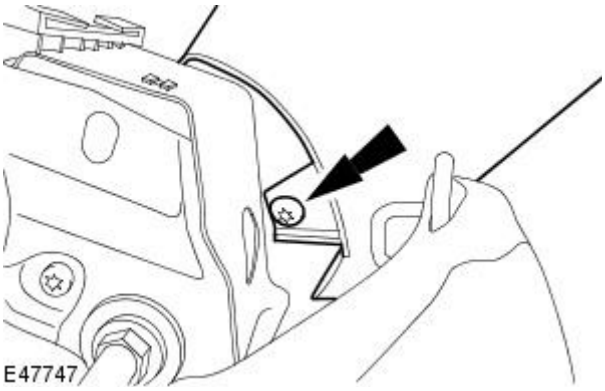

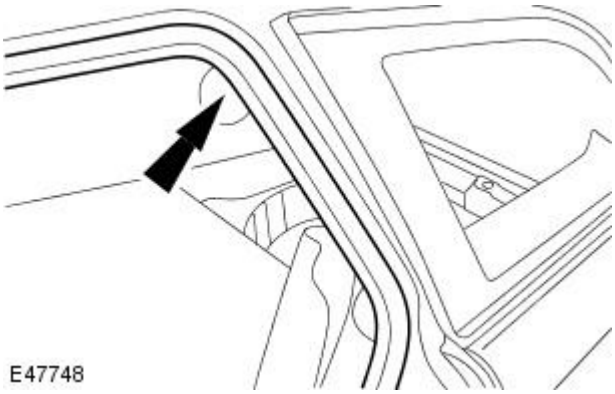

7. Detach the rear door opening weatherstrip.

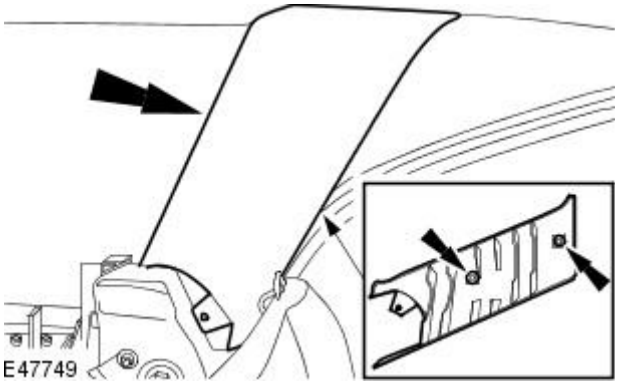

8. Remove the C-pillar trim panel.

Installation

1. To install, reverse the removal procedure.

Interior Trim and Ornamentation - D-Pillar Trim Panel

Removal and Installation

Removal

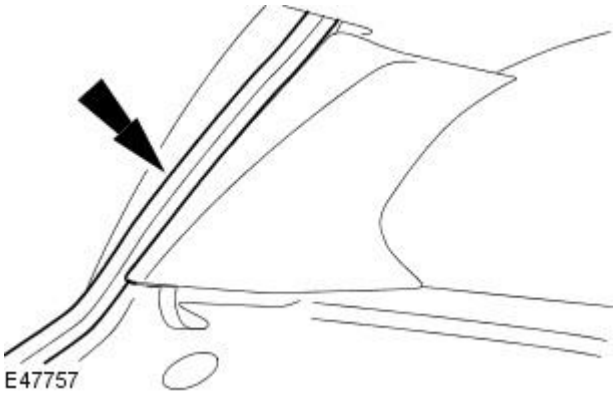

1. Detach the liftgate opening weatherstrip.

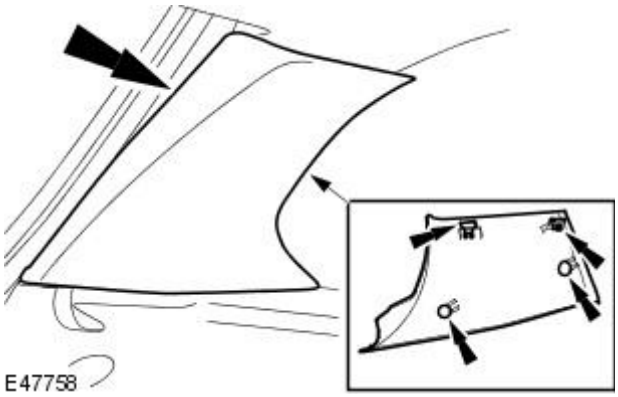

2. Detach the D-Pillar trim panel.

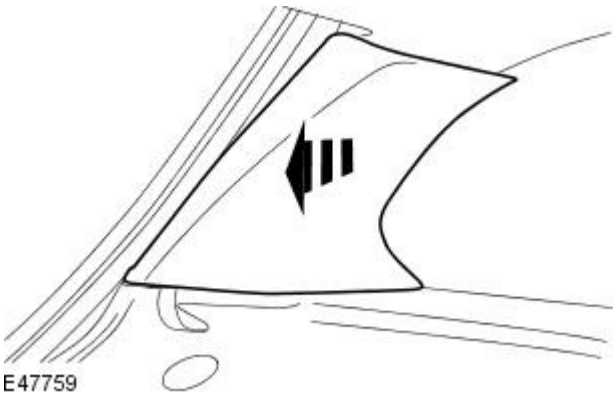

3. Remove the D-Pillar trim panel.

Installation

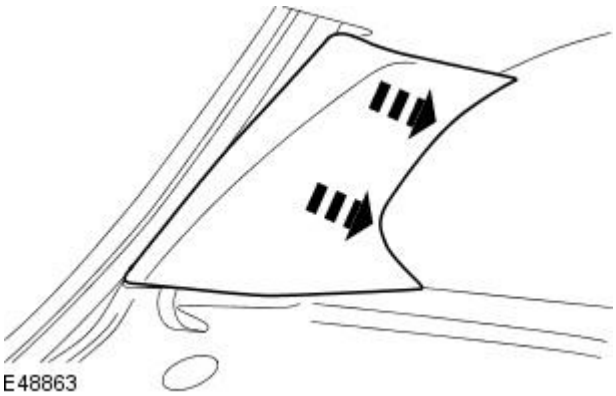

1. Attach the D-Pillar trim panel to the rear quarter window glass edge clips.

2. NOTE: Make sure the D-pillar trim panel is correctly located to the loadspace trim panel.

Locate the D-Pillar trim panel fir tree clips to the D-Pillar.

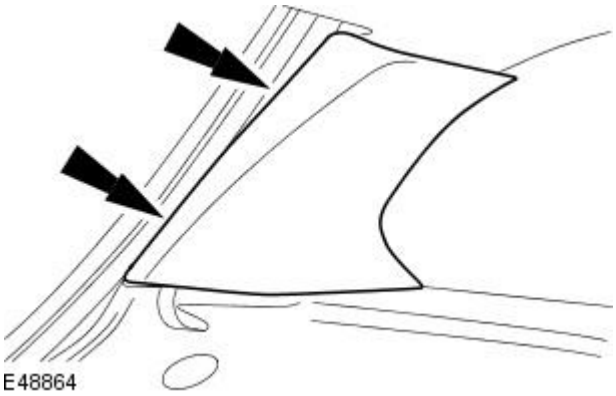

3. Install the D-Pillar trim panel.

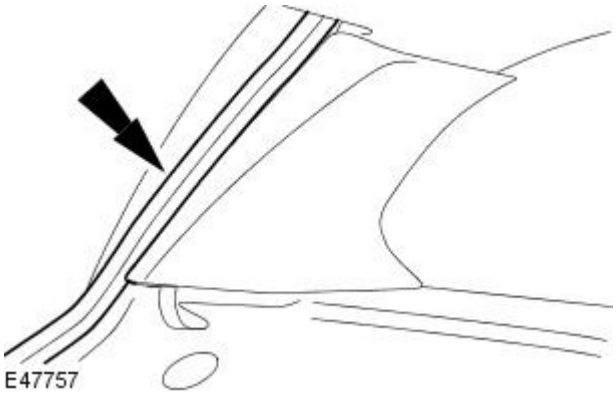

4. Attach the liftgate opening weatherstrip.

Interior Trim and Ornamentation - Front Door Trim Panel

Removal and Installation

Removal

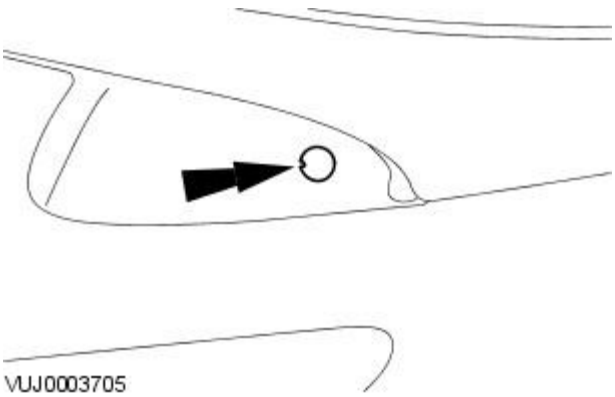

1. Remove the retaining screw cover.

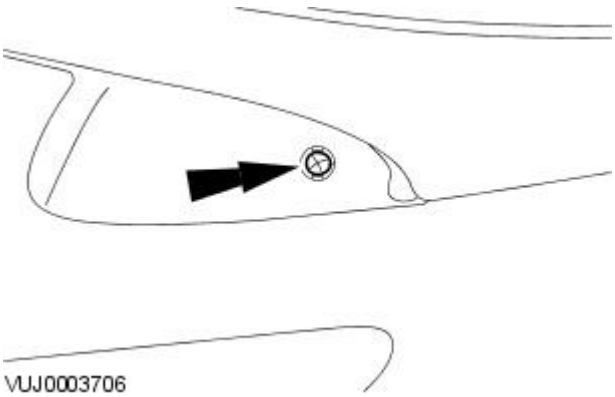

2. Remove the retaining screw.

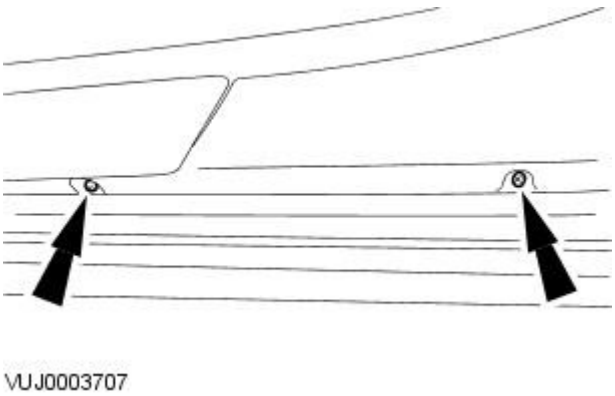

3. Remove the retaining screws.

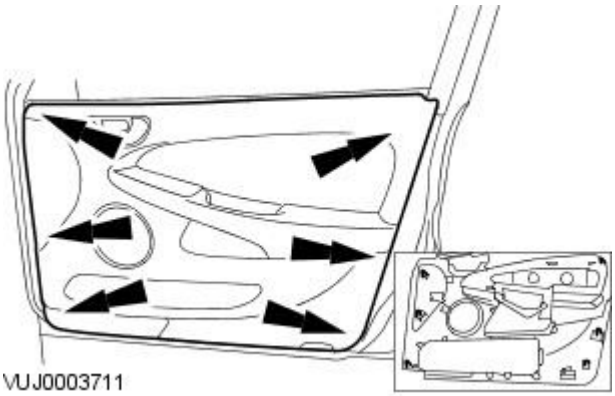

4. Detach the front door trim panel.

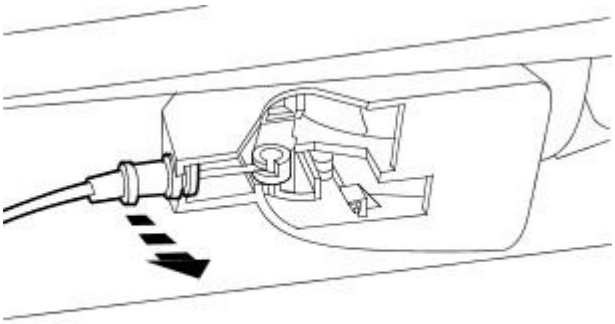

VUJ0003712

5. Detach the door handle cable.

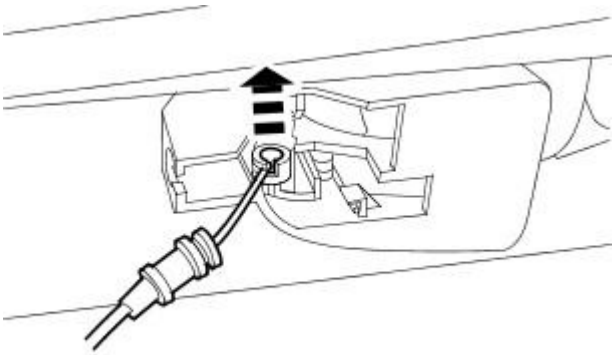

VUJ0003713

6. Remove the door handle cable.

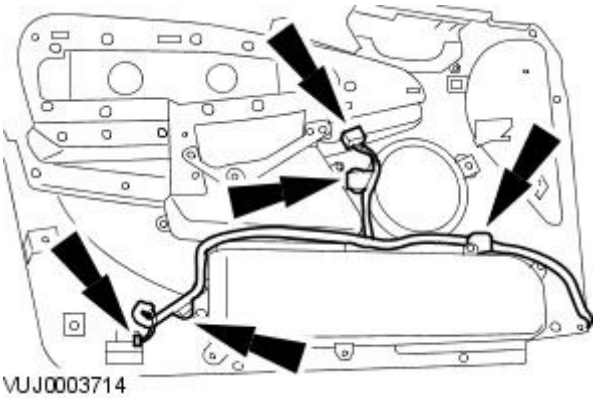

VUJ0003714

7. Remove the front door trim panel.

- Disconnect the electrical connectors and detach the wiring harness.

Installation

1. To install, reverse the removal procedure.

Interior Trim and Ornamentation - Front Scuff Plate Trim Panel

Removal and Installation

Removal

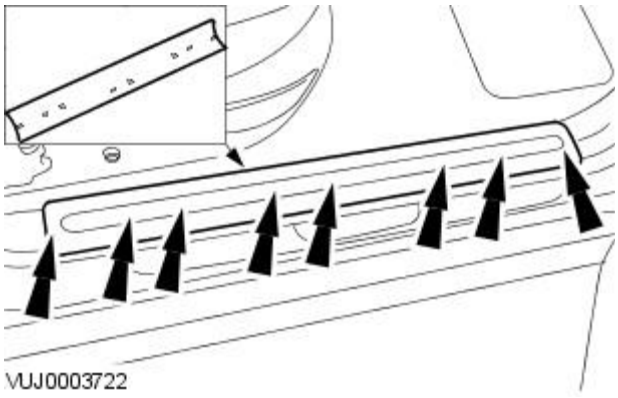

1. Remove the scuff plate trim panel.

Installation

1. To install, reverse the removal procedure.

Interior Trim and Ornamentation - Headliner4-Door

Removal and Installation

Removal

1. Remove the overhead console.
   For additional information, refer to: Overhead Console (501-12 Instrument Panel and Console, Removal and Installation).
2. Remove both sun visors.
   For additional information, refer to: Sun Visor (501-05 Interior Trim and Ornamentation, Removal and Installation).
3. Remove both sun visor retaining clips.

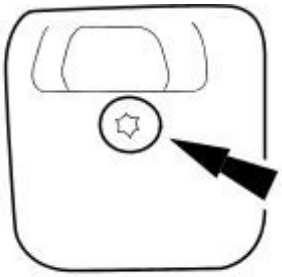

VUJ0003728

4. NOTE: Right-hand shown, left-hand similar.

   Detach the front door opening weather-strip.

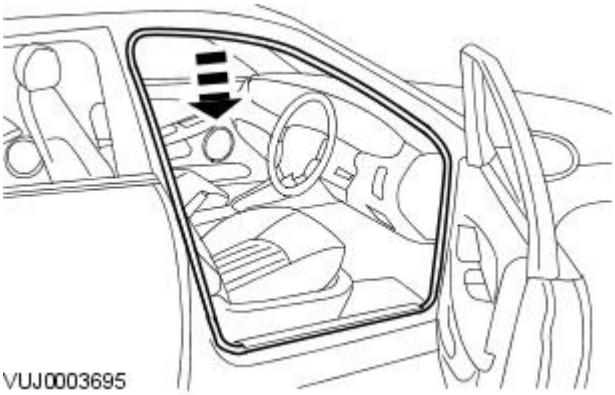

VUJ0003695

5. Remove both A-pillar trim panels.
   For additional information, refer to: A-Pillar Trim Panel (501-05 Interior Trim and Ornamentation, Removal and Installation).
6. Disconnect the left-hand electrical connector and detach the wiring harness.

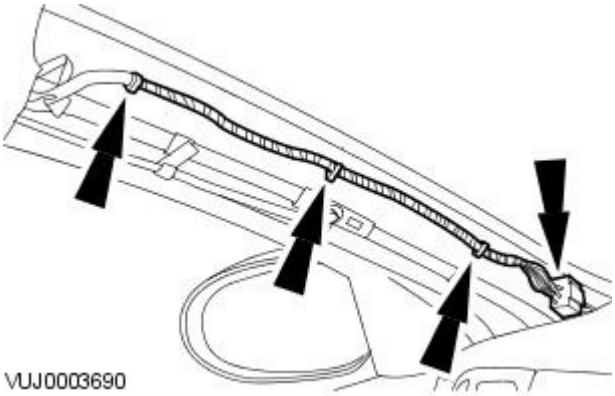

VUJ0003690

7. Disconnect the right-hand electrical connector and detach the wiring harness.

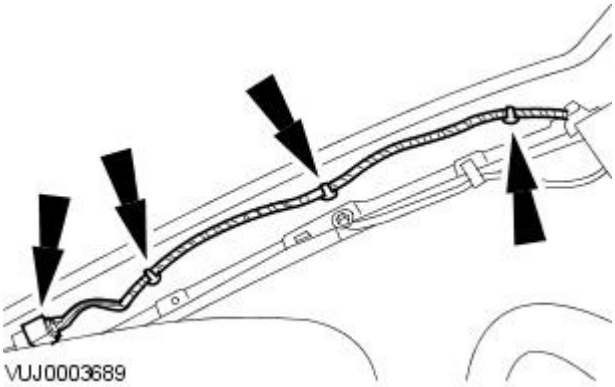

VUJ0003689

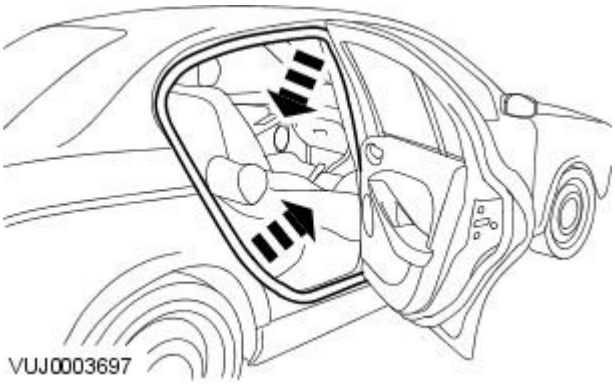

8. NOTE: Right-hand shown, left-hand similar.

Detach the rear door opening weather-strip.

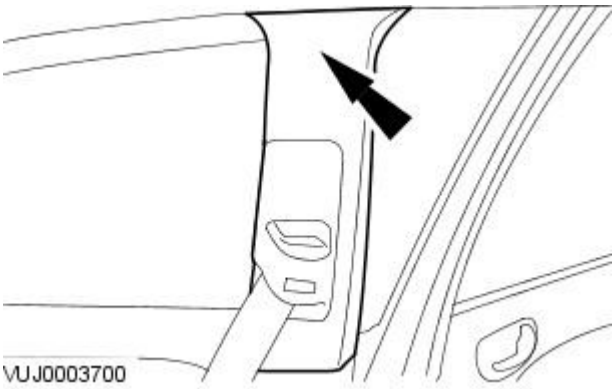

9. NOTE: Right-hand shown, left-hand similar.

Detach the B-pillar upper trim panel.

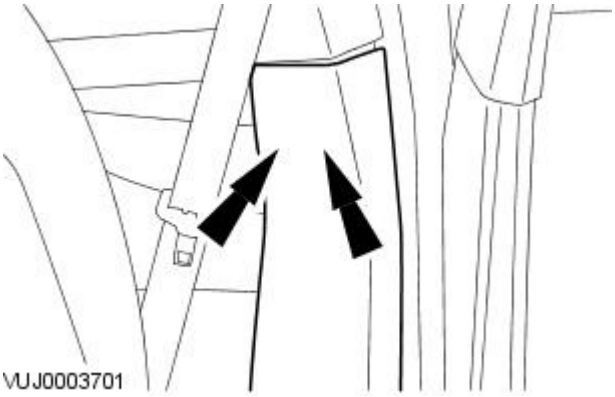

10. NOTE: Right-hand shown, left-hand similar.

Detach the B-pillar lower trim panel.

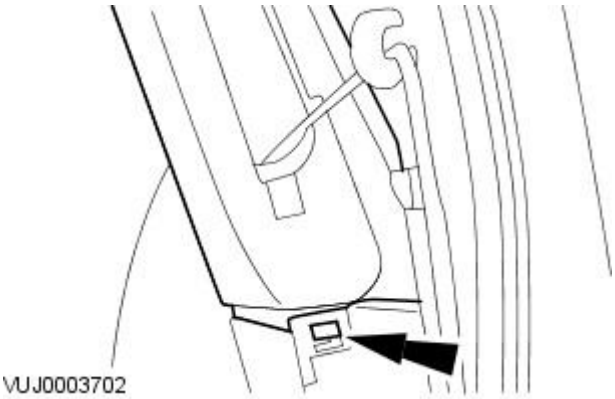

11. NOTE: Right-hand shown, left-hand similar.

Detach the B-pillar upper trim panels from the B-pillar trim lower trim panel.

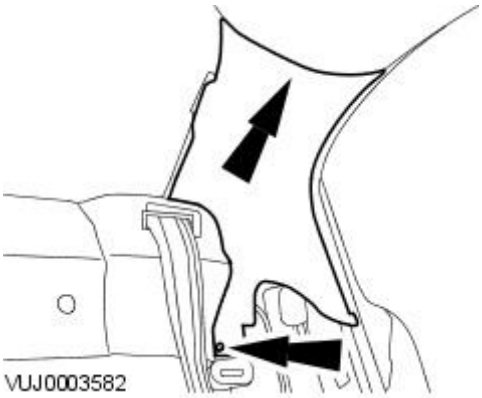

12. NOTE: Left-hand shown, right-hand similar.

• NOTE: The C-pillar trim panel is secured to the top of the C-pillar by a retaining strap. The retaining strap must be detached from the C-pillar before the C-pillar trim panel is removed.

Detach the C-pillar trim panel.

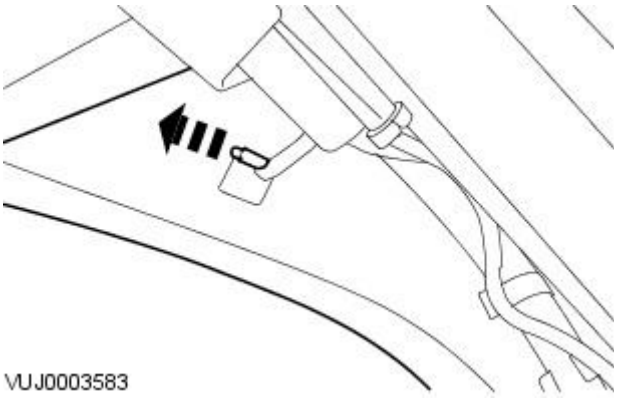

13. Remove the C-pillar trim panels.

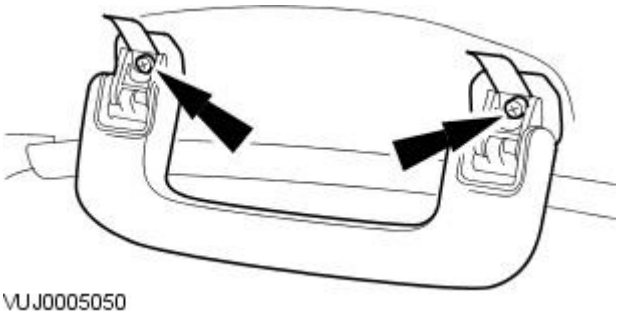

14. Detach the covers to expose the screws and remove the driver and passenger assist handles.

15. Remove the rear seat cushion.
For additional information, refer to: Rear Seat Cushion (501-10 Seating, Removal and Installation).

16. Recline both the front seat backrests to allow removal of the headliner through the rear door opening.

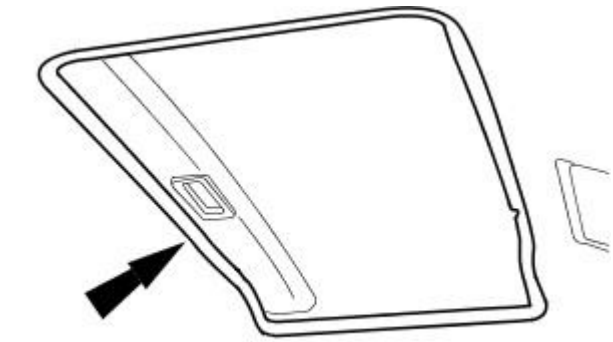

17. CAUTION: The headliner must not be creased or folded during removal or installation. Failure to follow this instruction may result in damage to the component.

Lower the headliner.

- Remove the sunroof opening panel weatherstrip.

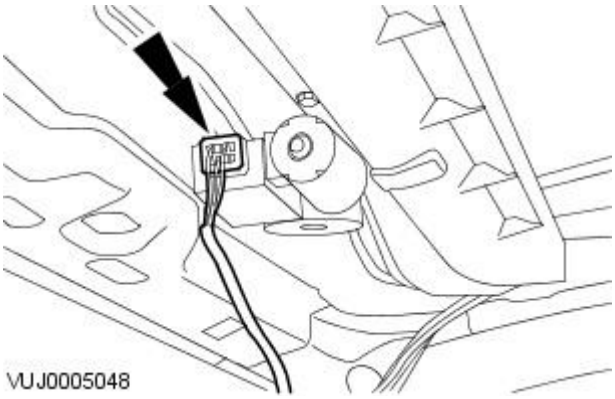

18. Disconnect the sunroof motor electrical connector.

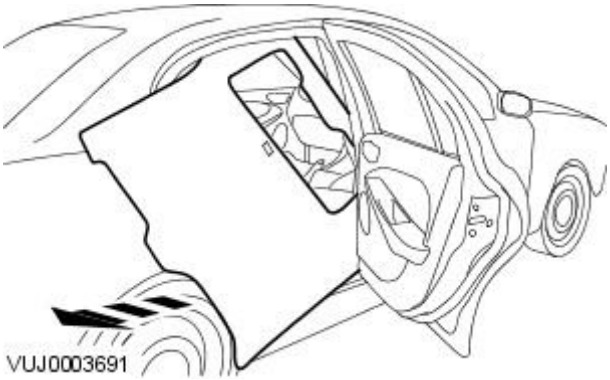

19. CAUTION: The headliner must not be creased or folded during removal or installation. Failure to follow this instruction may result in damage to the component.

With the aid of an assistant, remove the headliner.

Installation

1. To install, reverse the removal procedure.

Interior Trim and Ornamentation - HeadlinerWagon

Removal and Installation

Removal

1. Remove the overhead console.
   For additional information, refer to: Overhead Console (501-12 Instrument Panel and Console, Removal and Installation).
2. Remove both sun visors.
   For additional information, refer to: Sun Visor (501-05 Interior Trim and Ornamentation, Removal and Installation).
3. Remove both sun visor retaining clips.

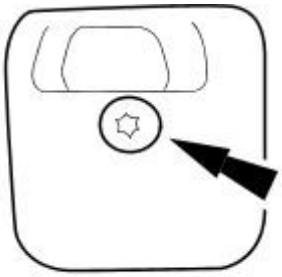

VUJ0003728

4. NOTE: Right-hand shown, left-hand similar.

   Detach the front door opening weatherstrip.

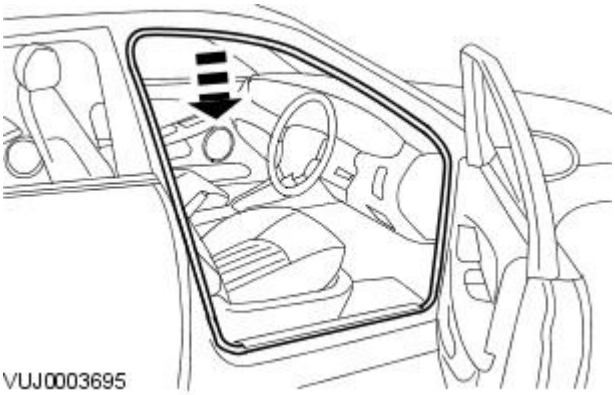

VUJ0003695

5. Remove both A-pillar trim panels.
   For additional information, refer to: A-Pillar Trim Panel (501-05 Interior Trim and Ornamentation, Removal and Installation).
6. Disconnect the left-hand electrical connector and detach the wiring harness.

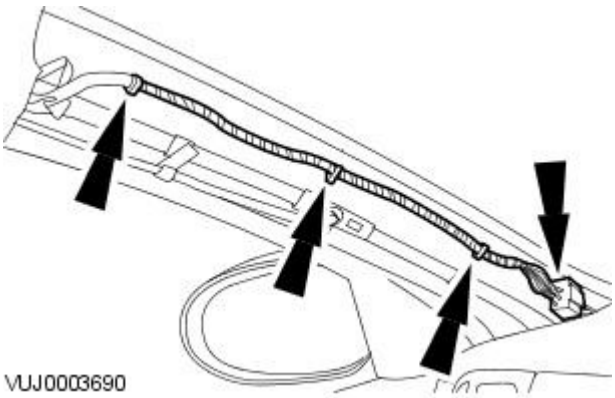

VUJ0003690

7. Disconnect the rear washer hose connector.

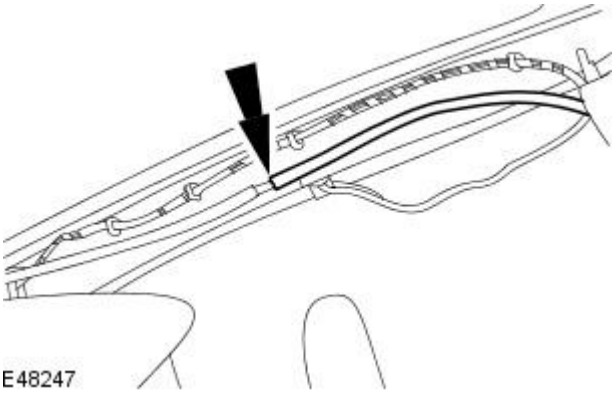

E48247

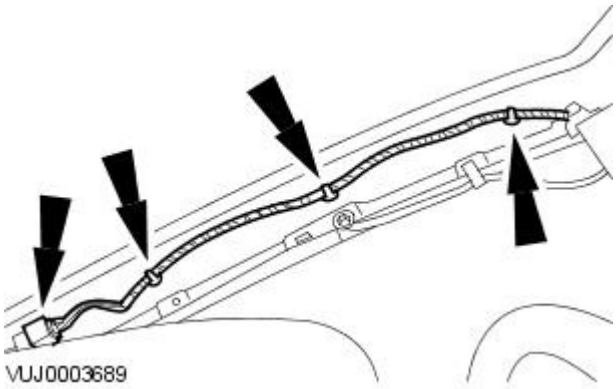

8. Disconnect the right-hand electrical connector and detach the wiring harness.

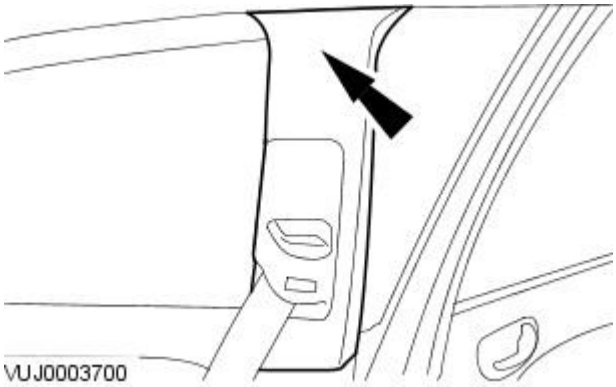

9. NOTE: Right-hand shown, left-hand similar.

Detach the B-pillar upper trim panel.

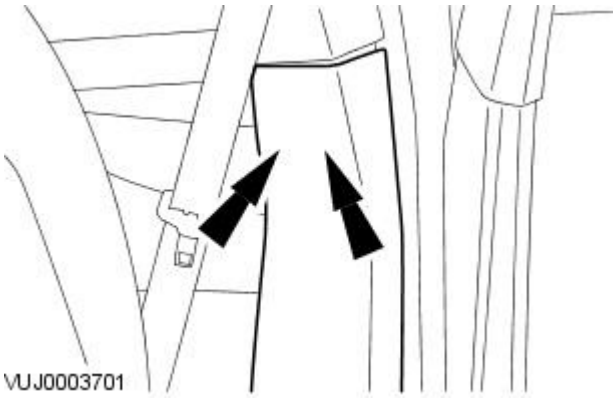

10. NOTE: Right-hand shown, left-hand similar.

Detach the B-pillar lower trim panel.

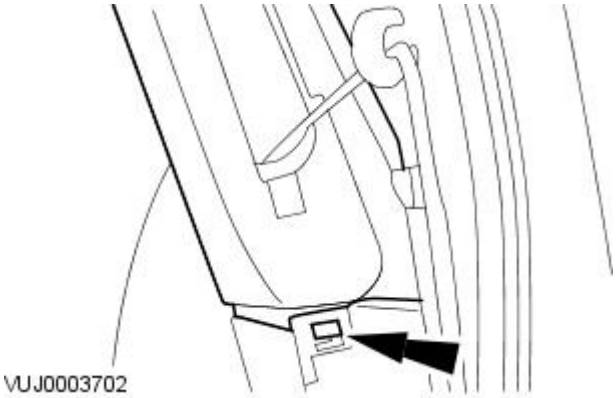

11. NOTE: Right-hand shown, left-hand similar.

Detach the B-pillar upper trim panel from the B-pillar trim lower trim panel.

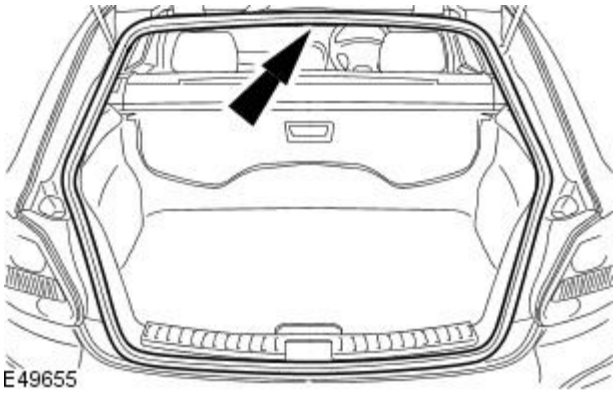

12. NOTE: The liftgate weatherstrip must be replaced once removed.

Remove and discard the liftgate opening weatherstrip.

13. Remove both C-pillar trim panels.
For additional information, refer to: C-Pillar Trim Panel - Wagon (501-05 Interior Trim and Ornamentation, Removal and Installation).

14. Remove both D-pillar trim panels.
For additional information, refer to: D-Pillar Trim Panel (501-05 Interior Trim and Ornamentation, Removal and Installation).

15. Detach the covers to expose the screws and remove the driver and passenger assist handles.

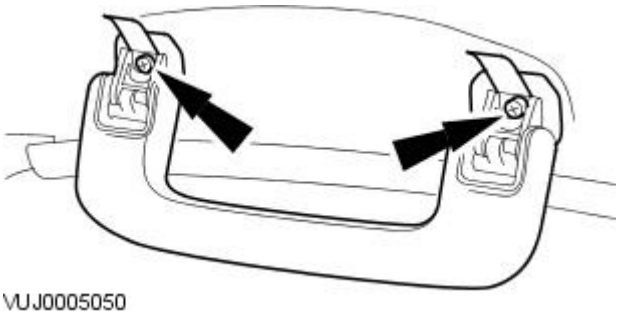

VUJ0005050

16. Remove both luggage net retaining clips.

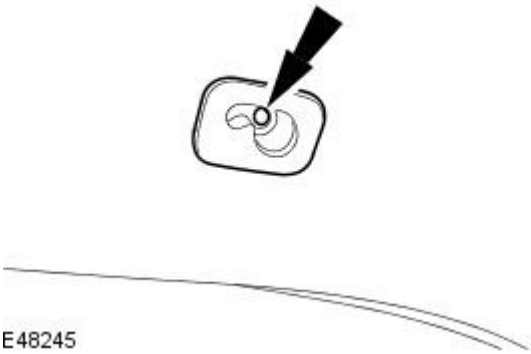

E48245

17. Detach the headliner.

E49095

18. CAUTION: The headliner must not be creased or folded during removal or installation. Failure to follow this instruction may result in damage to the component.

Lower the headliner.

- Remove the sunroof opening panel weatherstrip.

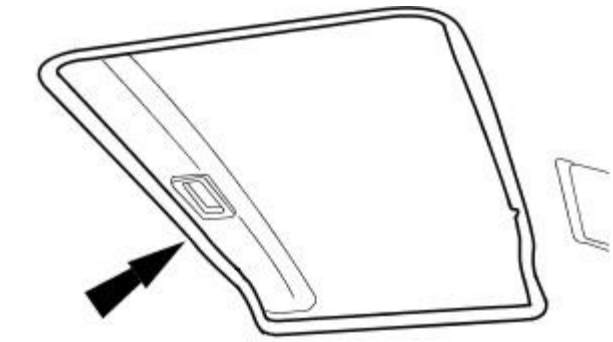

VUJ0005047

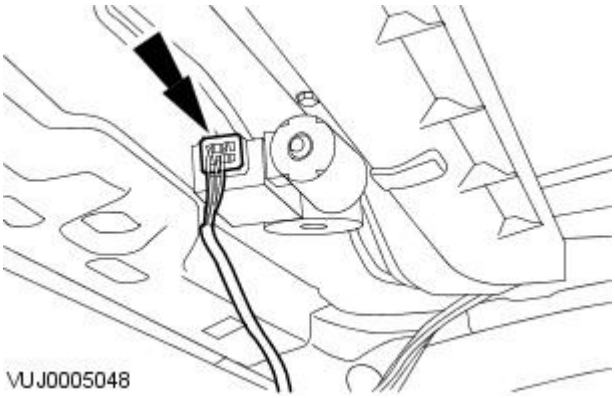

19. Disconnect the roof opening panel motor electrical connector.

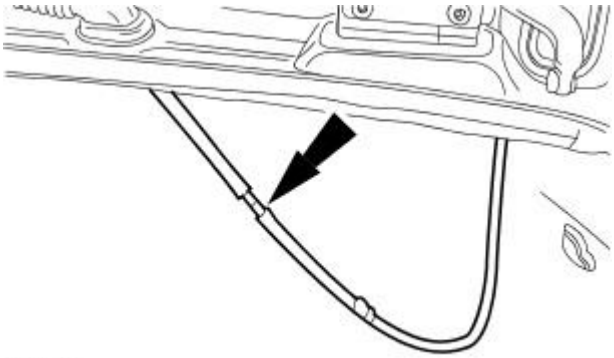

20. Disconnect the rear washer hose connector.

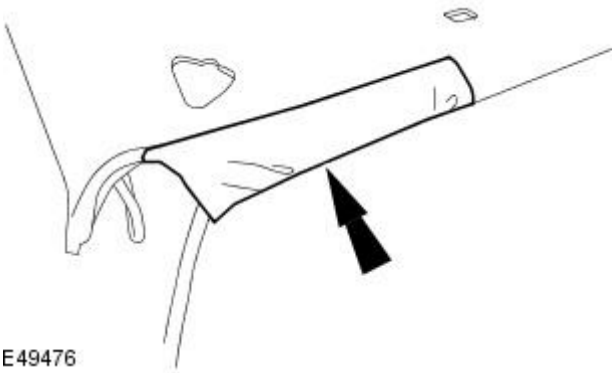

21. NOTE: Headliner shown removed for clarity.

Using a suitable adhesive tape, protect both front corners of the headliner.

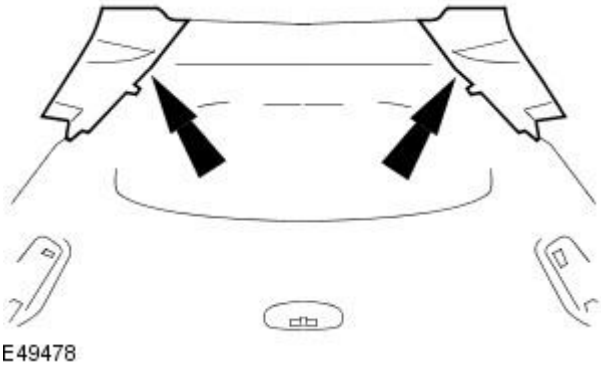

22. NOTE: Headliner shown removed for clarity.

Using a suitable adhesive tape, protect both rear corners of the headliner.

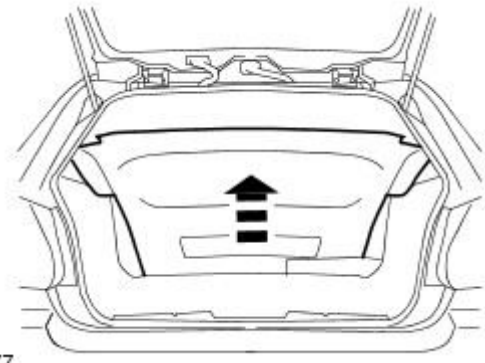

23. CAUTIONS:

Make sure the headliner is not creased or folded where it is not protected by adhesive tape. Failure to follow this instruction may result in damage to the component.

Make sure the headliner is fully supported during removal. Failure to follow this instruction may result in damage to the component.

With the aid of an assistant, remove the headliner.

Installation

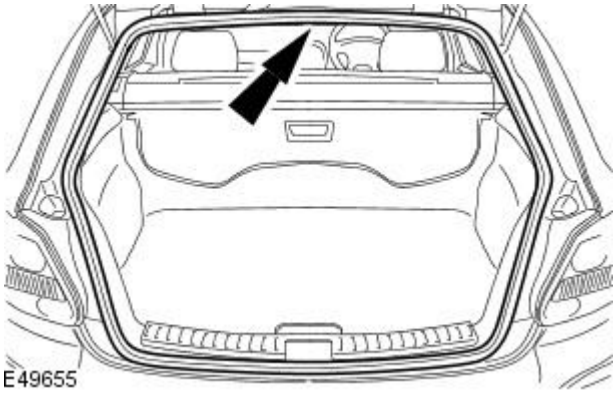

1. To install, reverse the removal procedure.
2. NOTE: The liftgate weatherstrip must be replaced once removed.

   Install a new liftgate opening weatherstrip.

Interior Trim and Ornamentation - Liftgate Trim Panel

Removal and Installation

Removal

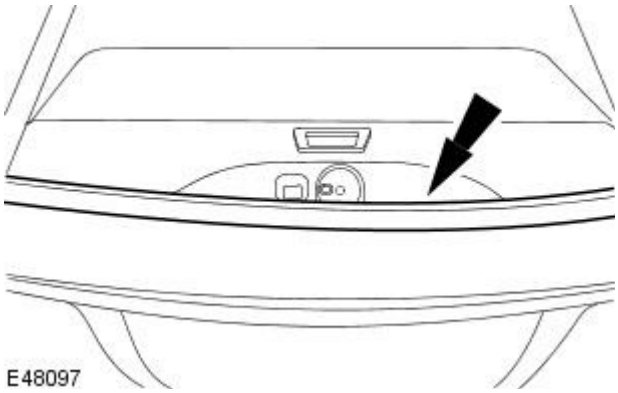

1. Detach the liftgate window glass weatherstrip.

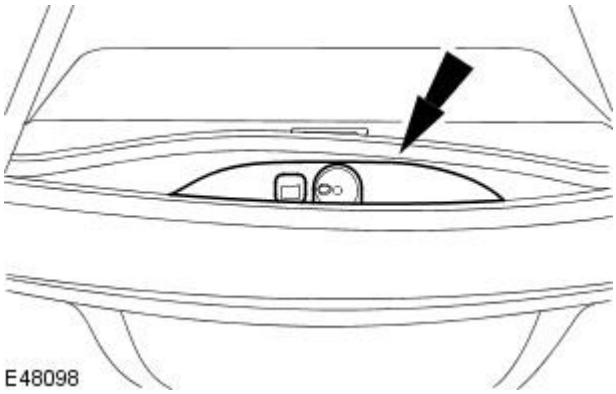

2. Remove the liftgate window glass latch actuator finisher trim panel.

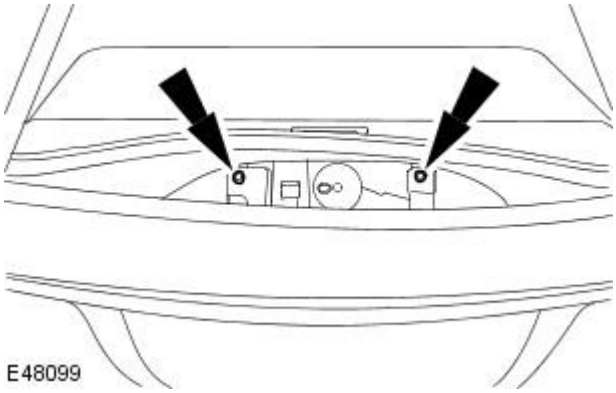

3. Remove the liftgate trim panel upper retaining screws.

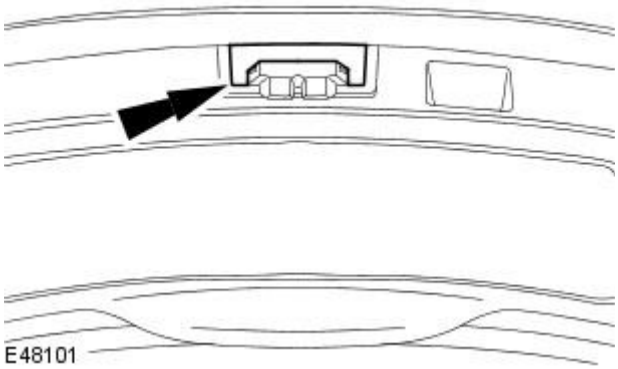

4. Remove the liftgate latch actuator finisher trim panel.

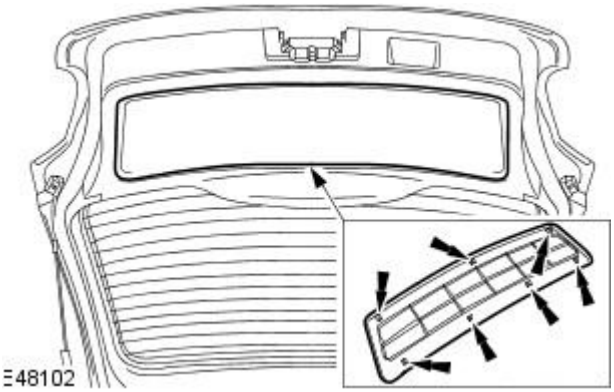

5. Remove the liftgate finisher trim panel.

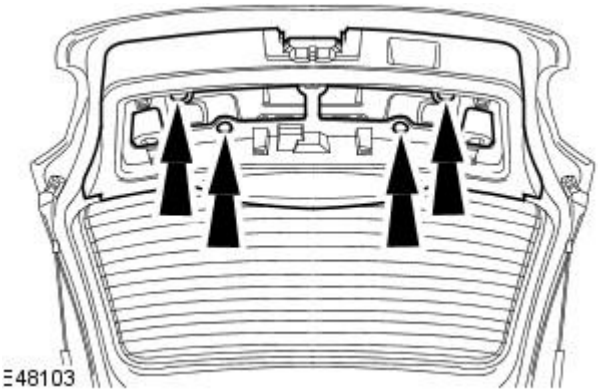

6. Deatch the liftgate trim panel.

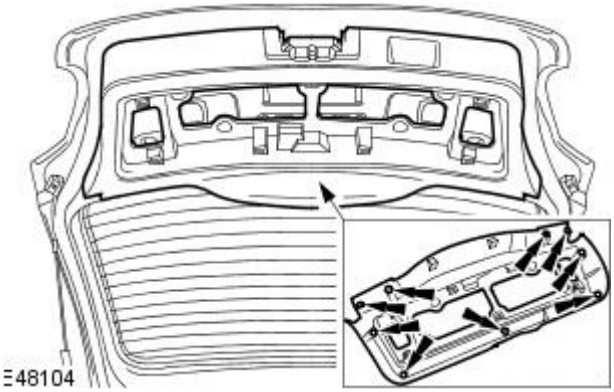

7. Remove the liftgate trim panel.

Installation

1. To install, reverse the removal procedure.

Interior Trim and Ornamentation - Loadspace Scuff Plate Trim Panel

Removal and Installation

Removal

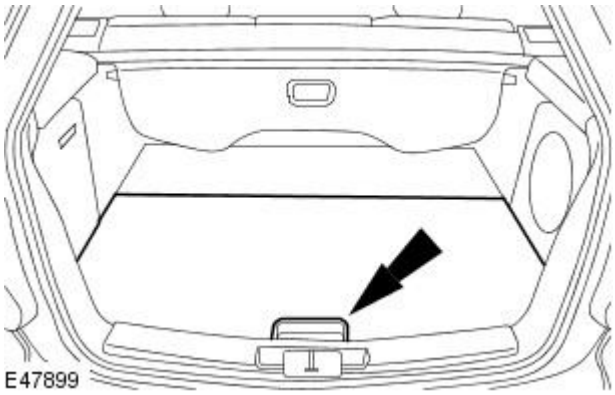

1. Raise the loadspace floor covering.

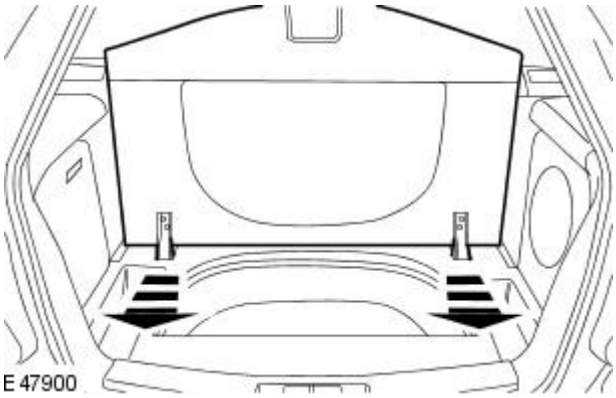

2. Remove the loadspace floor covering.

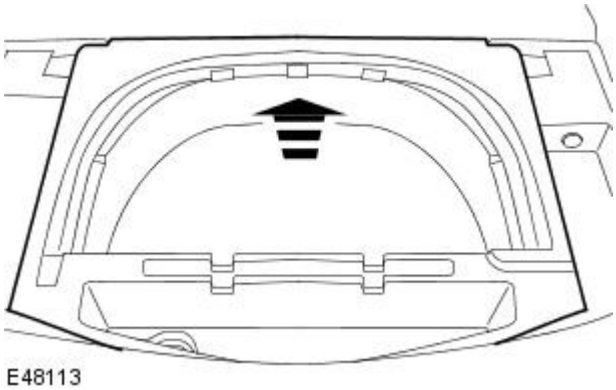

3. Remove the centre loadspace stowage compartment.

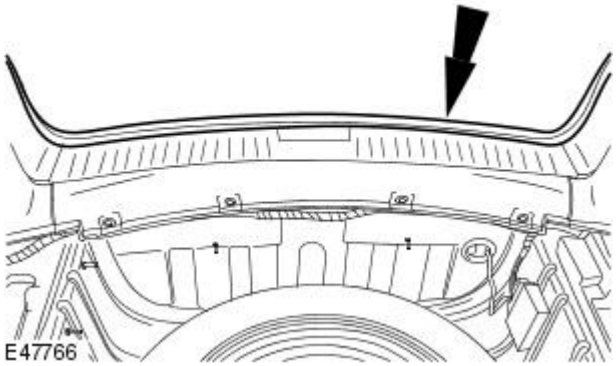

4. Detach the loadspace opening weatherstrip.

5. Detach the loadspace scuff plate trim panel.

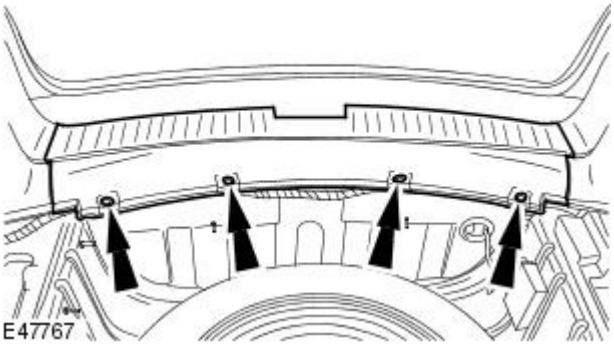

6. Remove the loadspace scuff plate trim panel.

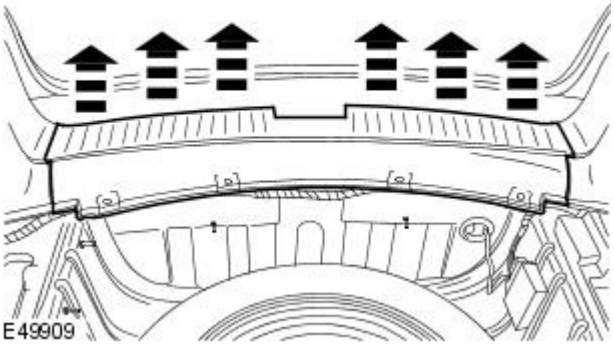

Installation

1. To install, reverse the removal procedure.

Interior Trim and Ornamentation - Loadspace Trim Panel

Removal and Installation

Removal

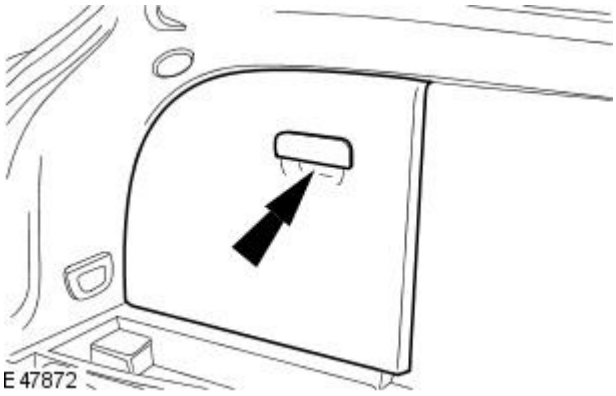

1. Remove the loadspace scuff plate trim panel.
   For additional information, refer to: Loadspace Scuff Plate Trim Panel (501-05 Interior Trim and Ornamentation, Removal and Installation).
2. Remove the loadspace stowage compartment lid.

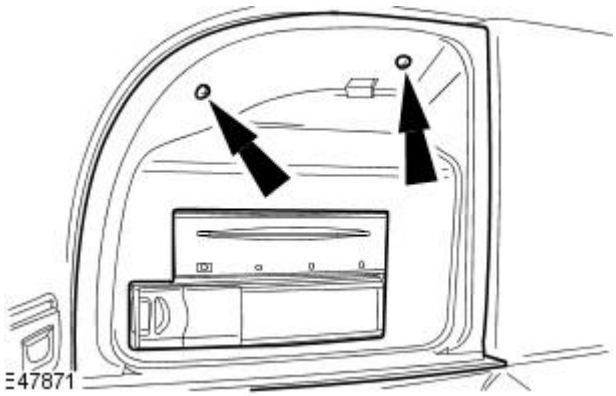

3. Remove the loadspace stowage compartment.

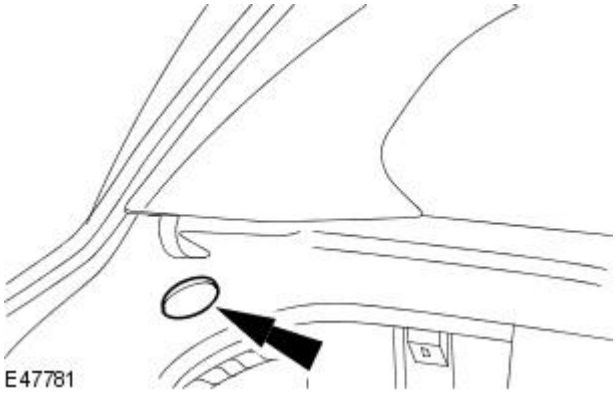

4. Detach the loadspace courtesy lamp.

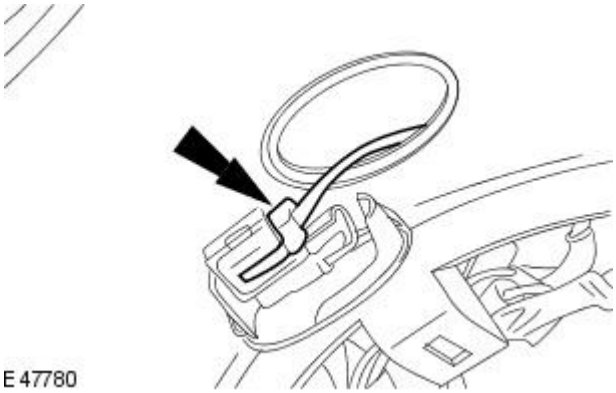

5. Remove the loadspace courtesy lamp.
   - Disconnect the electrical connector.
6. Remove the D-pillar trim panel.
   For additional information, refer to: D-Pillar Trim Panel (501-05 Interior Trim and Ornamentation, Removal and Installation).
7. Remove the C-pillar trim panel.
   For additional information, refer to: C-Pillar Trim Panel - Wagon (501-05 Interior Trim and Ornamentation, Removal and Installation).

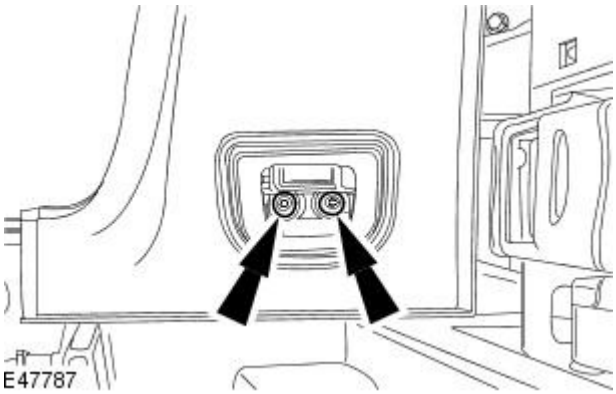

8. Remove the retaining hook.

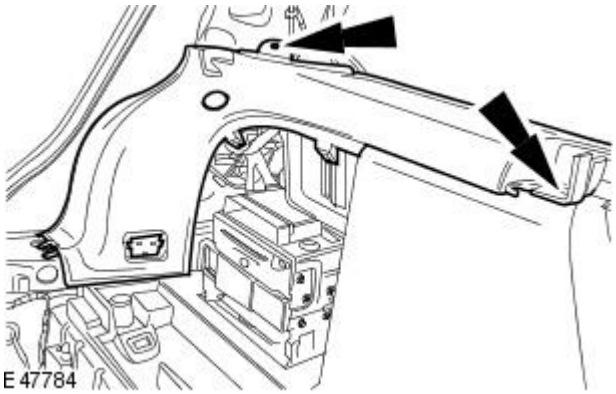

9. Remove the loadspace trim panel retaining screws.

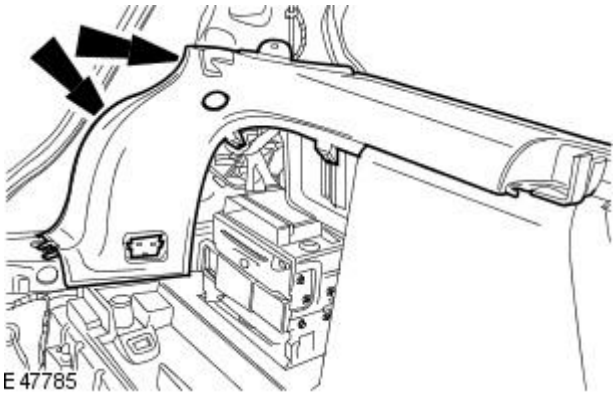

10. Detach the loadspace trim panel rear retaining clips.

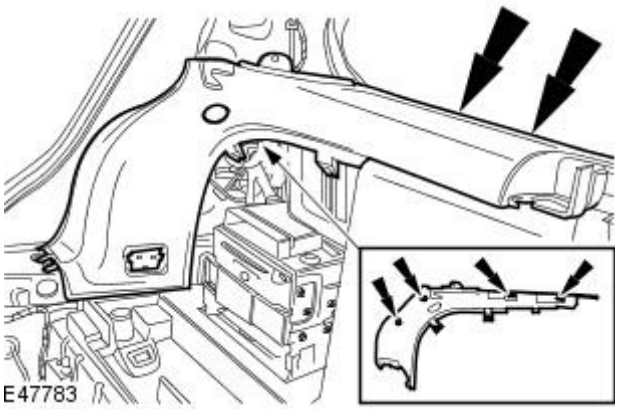

11. Detach the loadspace trim panel front retaining clips.

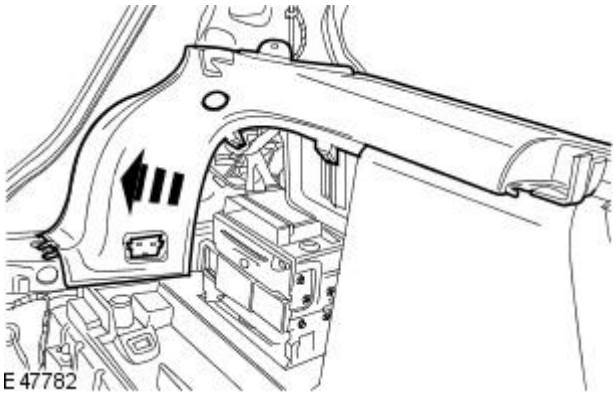

12. Remove the loadspace trim panel.

Installation

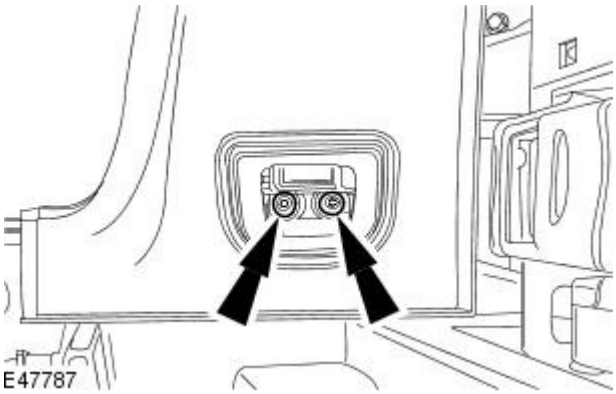

1. To install, reverse the removal procedure.
   - Tighten to 8 Nm.

Interior Trim and Ornamentation - Parcel Shelf

Removal and Installation

Removal

Vehicles with split rear seat backrest

1. Remove the rear seat cushion.
   For additional information, refer to: Rear Seat Cushion (501-10 Seating, Removal and Installation).
2. Remove the rear center safety belt and buckle.
   - Remove the retaining bolt.

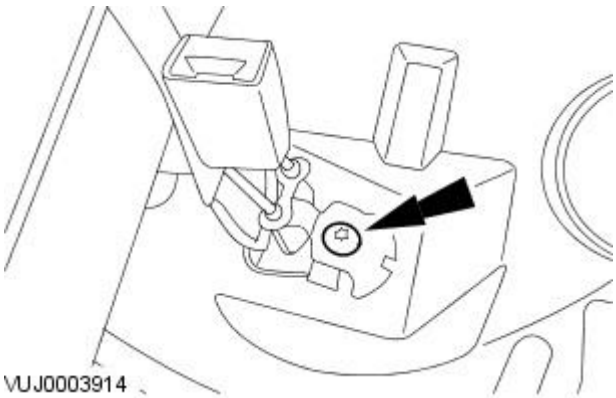

All vehicles

3. Remove both C-pillar trim panels.
   For additional information, refer to: C-Pillar Trim Panel - 4-Door (501-05 Interior Trim and Ornamentation, Removal and Installation).
4. NOTE: Left-hand shown, right-hand similar.

   Detach the rear safety belt retractor trim panel.

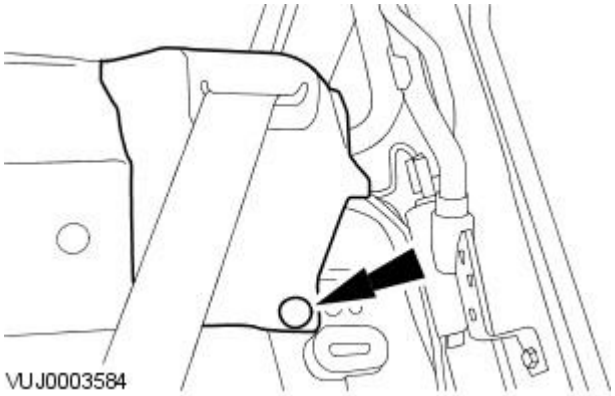

Vehicles with split rear seat backrest

5. NOTE: Left-hand shown, right-hand similar.

   Remove the rear seat backrest latch cover.

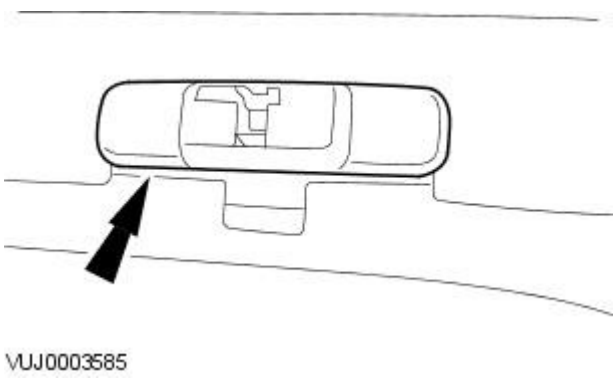

All vehicles

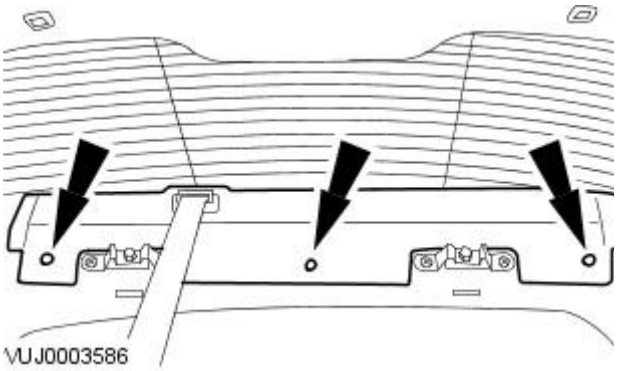

6. Remove the parcel shelf.

- Pass the rear centre safety belt through the parcel shelf.

Installation

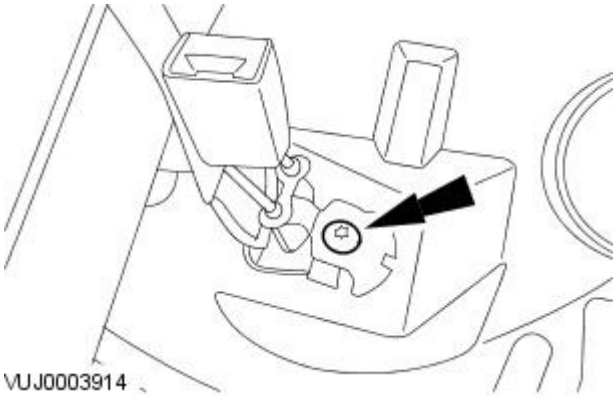

1. To install, reverse the removal procedure.

- Tighten to 55 Nm.

Interior Trim and Ornamentation - Rear Door Trim Panel

Removal and Installation

Removal

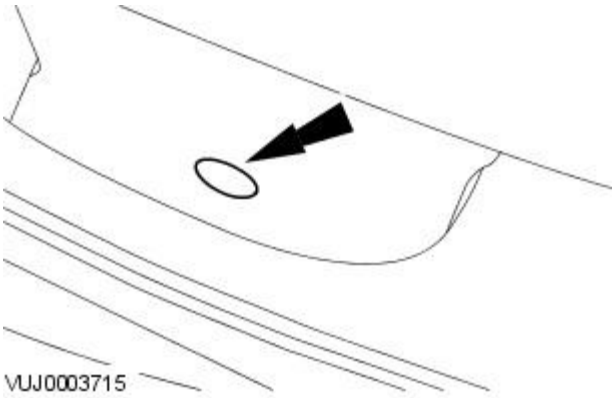

1. Remove the retaining screw cover.

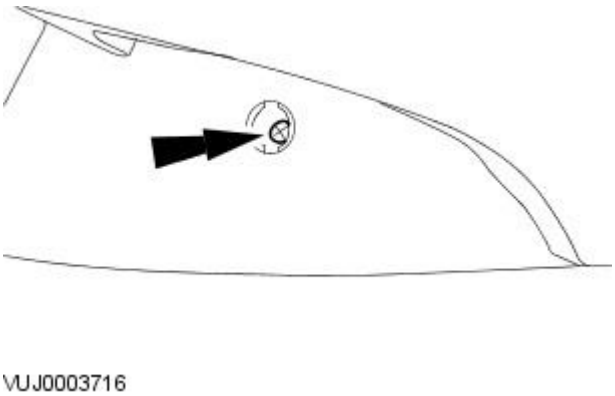

2. Remove the retaining screw.

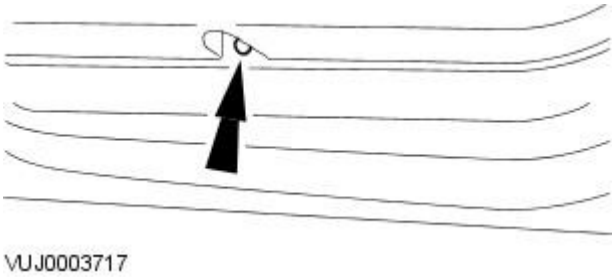

3. Remove the retaining screw.

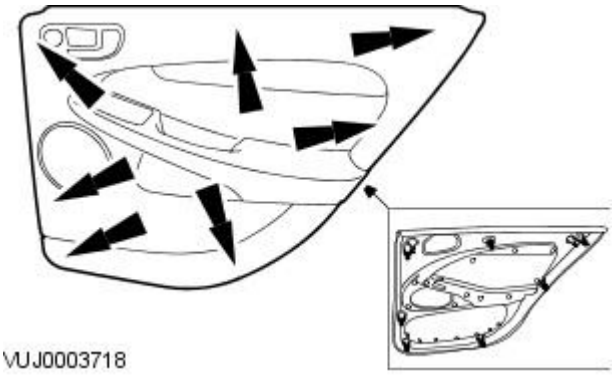

4. Detach the rear door trim panel.

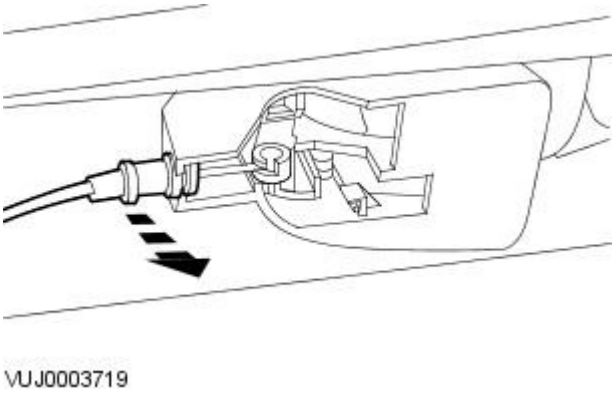

5. Detach the door handle cable.

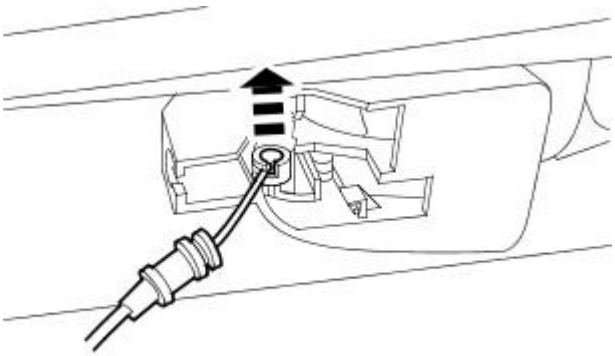

VUJ0003720

6. Remove the door handle cable.

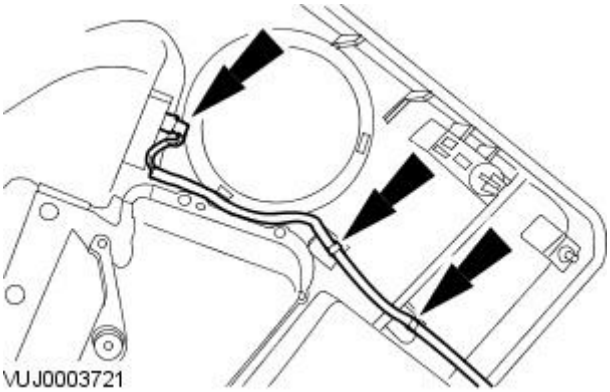

VUJ0003721

7. Remove the rear door trim panel.

- Disconnect the electrical connectors and detach the wiring harness.

Installation

1. To install, reverse the removal procedure.

Interior Trim and Ornamentation - Rear Scuff Plate Trim Panel

Removal and Installation

Removal

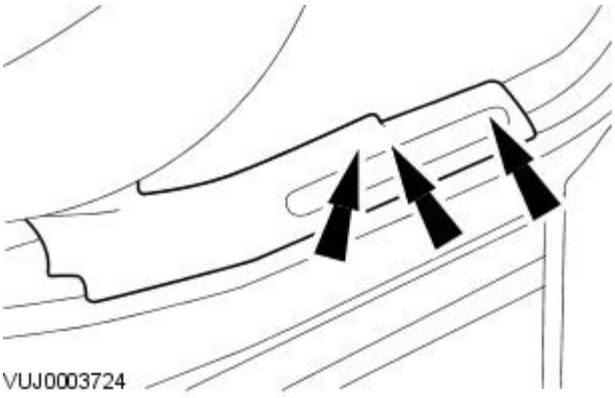

1. Detach the scuff plate trim panel.

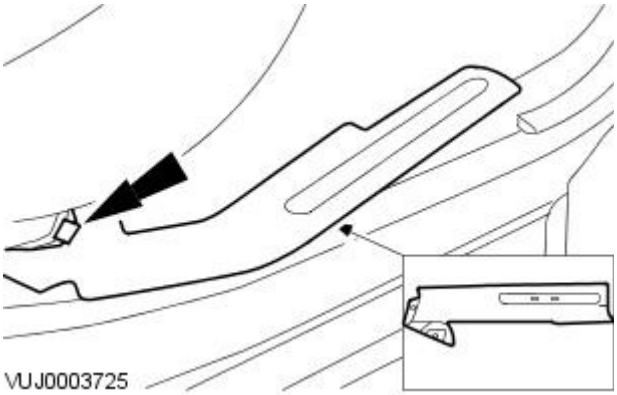

2. Remove the scuff plate trim panel.

Installation

1. To install, reverse the removal procedure.

Interior Trim and Ornamentation - Rear Window Blind

Removal and Installation

Removal

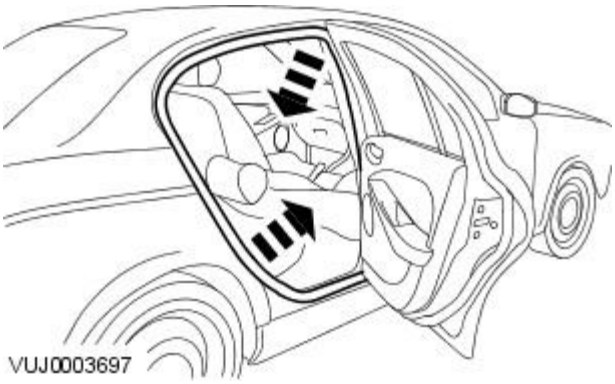

1. Detach the rear door opening weather-strips.

2. Remove the rear seat side bolster. For additional information, refer to Section 501-10 Seating.
3. Remove the C-pillar trim panels. For additional information, refer to C-Pillar Trim Panel.
4. Detach the seat belt reel trim panels.

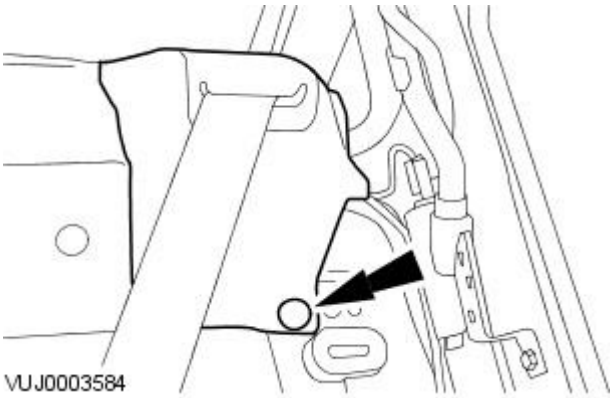

5. Remove the rear seat backrest latch covers.

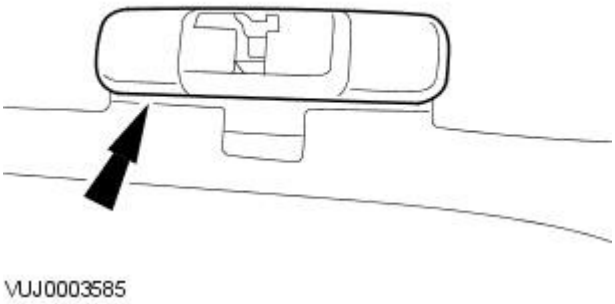

6. Detach the parcel shelf trim panel.

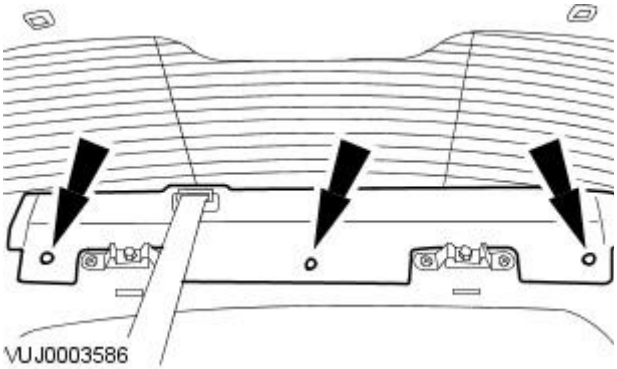

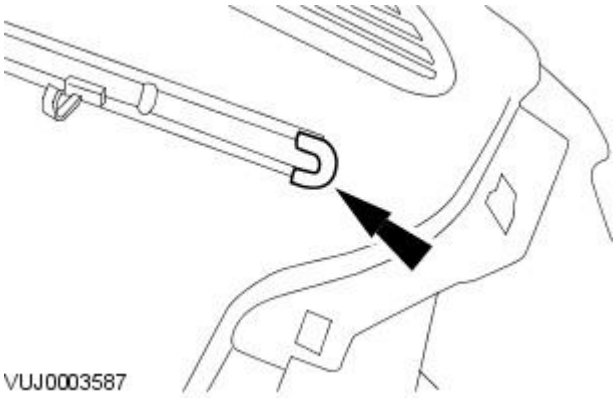

7. Remove the rear window blind retaining clips.

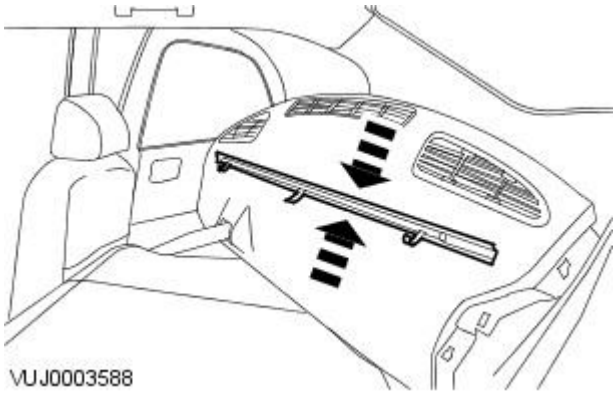

8. Remove the rear window blind.

- Press the sides of the rear window blind inwards.

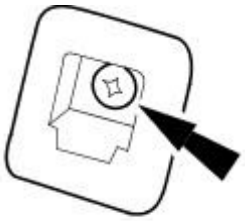

VUJ0003589

9. Remove the rear window blind roof fixing.

Installation

1. To install, reverse the removal procedure.

Interior Trim and Ornamentation - Sun Visor

Removal and Installation

Removal

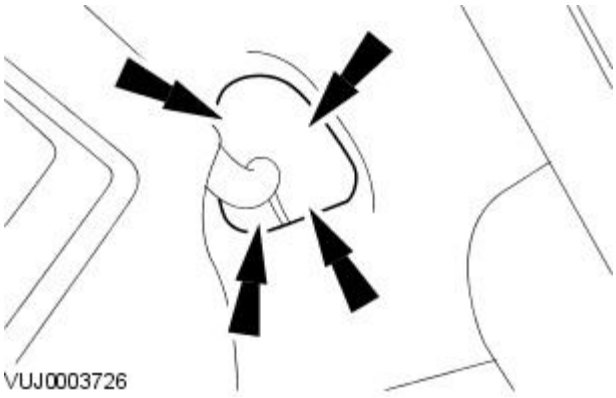

1. Remove the sun visor retaining screw cover.

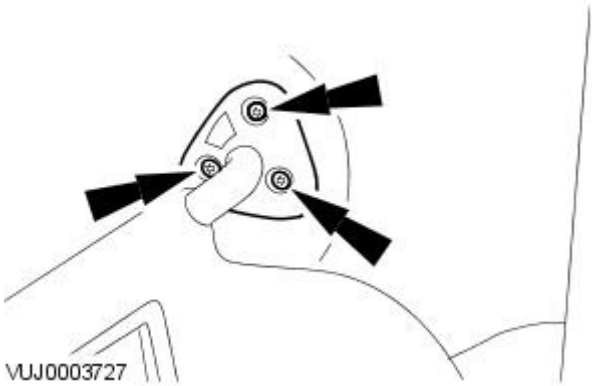

2. Detach the sun visor.

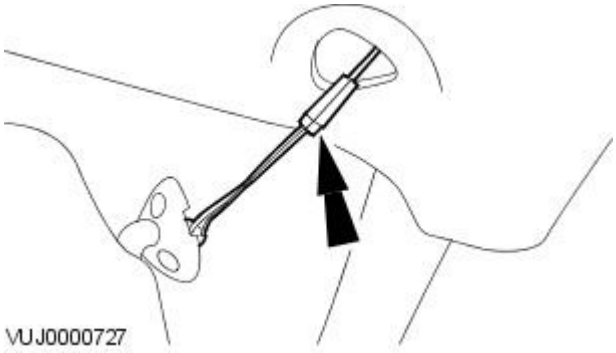

3. Remove the sun visor.

- Disconnect the electrical connector.

Installation

1. NOTE: Using a suitable adhesive tape, secure the electrical connector to the headliner.

To install, reverse the removal procedure.

Published: 11-May-2011

Exterior Trim and Ornamentation -

Torque Specifications

Description	Nm	lb-ft	lb-in
Radiator grill retaining bolts	7	-	62
Rear spoiler retaining nuts	5	-	44
Roof rail retaining bolts	14	10	-
Liftgate moulding retaining nuts	3	-	27

Exterior Trim and Ornamentation - Exterior Trim

Description and Operation

4-Door

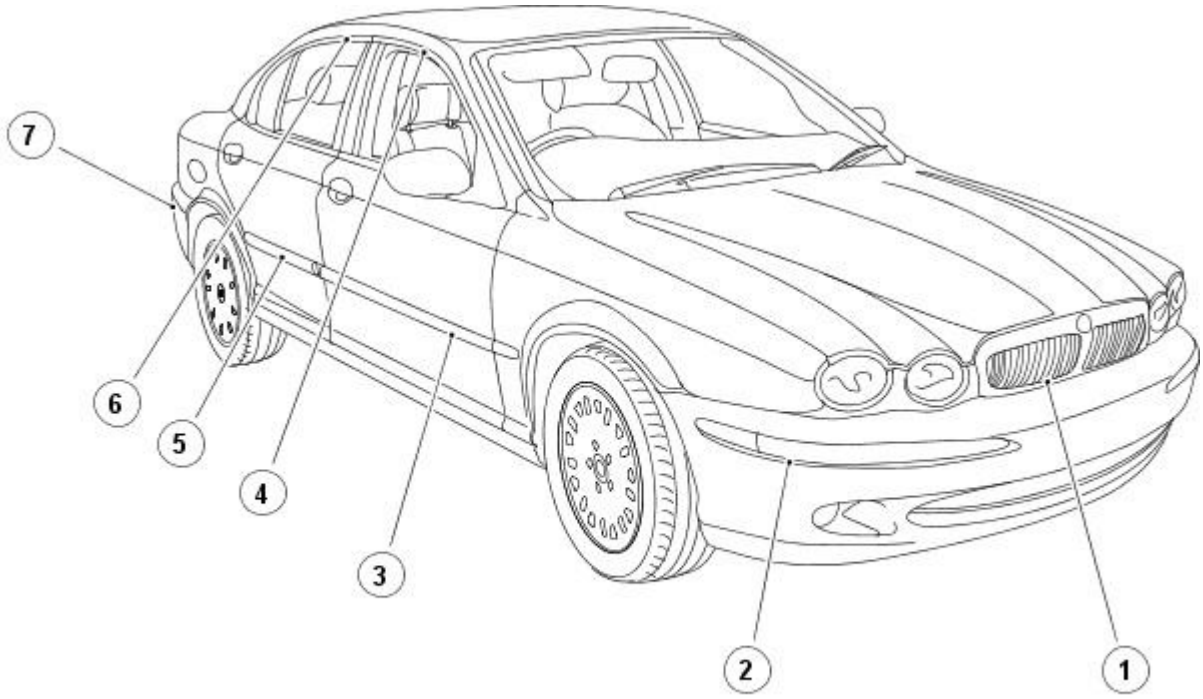

VUJ0004078

Item	Part Number	Description
1	—	Radiator grille
2	—	Front bumper insert moulding
3	—	Front door lower moulding
4	—	Front door glass moulding
5	—	Rear door lower moulding
6	—	Rear door glass moulding
7	—	Rear bumper insert moulding

Wagon

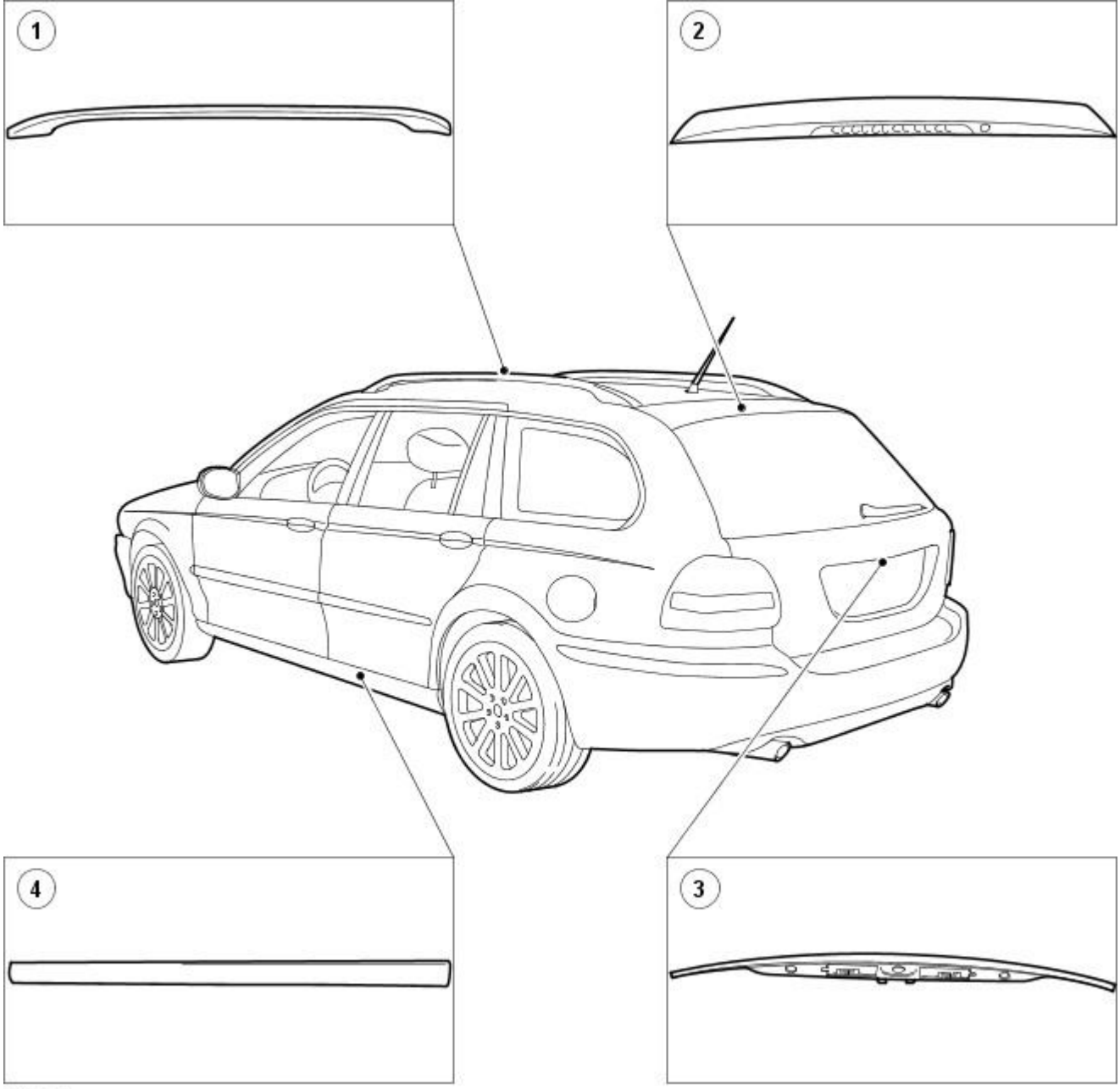

E49337

Item	Part Number	Description
1	-	Roof rail
2	-	Rear spoiler
3	-	Liftgate moulding
4	-	Rocker panel moulding

Exterior Trim and Ornamentation - Door Moulding

Removal and Installation

Removal

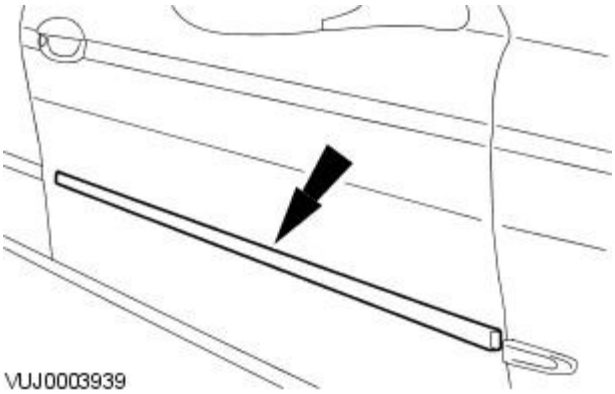

1. Apply suitable protective tape to adjacent areas of paintworks.
2. Using a hand-held heat gun, apply heat uniformly along the moulding length.
3. Applying local heat at one end and using a suitable thin lever to avoid damaging paintwork, progessively ease the moulding away from the door panel.
4. Discard the moulding and remove protective tape.
5. Remove any residual adhesive and thoroughly clean area using isopropyl alcohol.

Installation

1. NOTE: Optimum adhesion is achieved by warming body panel and moulding to 30°C (86°F)

   Using isopropyl alcohol, make sure that mounting area is clean, dry and de-greased.
2. Remove protective backing tape from the moulding.
3. NOTE: Do not allow the moulding to contact the body panel until it is correctly aligned.

   Aligning with adjacent mouldings or to match opposite side of vehicle, press the new moulding firmly onto the body panel.
4. Apply hand pressure along the moulding length to make sure satisfactory adhesion.
5. Allow the moulding and door panel to cool, then thoroughly clean both using isopropyl alcohol.
6. Apply a coat of suitable polish to the moulding and body panel.

Exterior Trim and Ornamentation - Liftgate Moulding

Removal and Installation

Removal

1. Remove the liftgate trim panel.
   For additional information, refer to: Liftgate Trim Panel (501-05 Interior Trim and Ornamentation, Removal and Installation).
2. Disconnect the electrical connector.

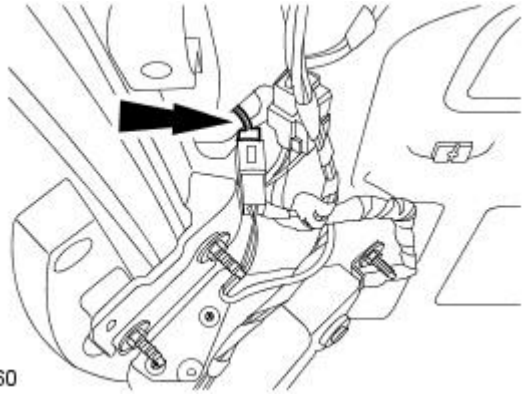

E49360

3. NOTE: Left-hand shown, right-hand similar.

   Remove the liftgate moulding retaining nuts.

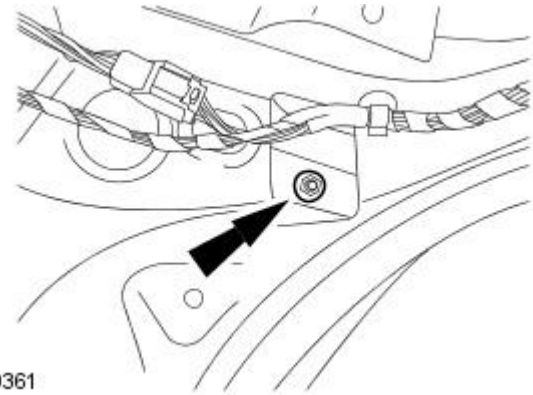

E49361

4. Remove the liftgate moulding retaining screw covers.

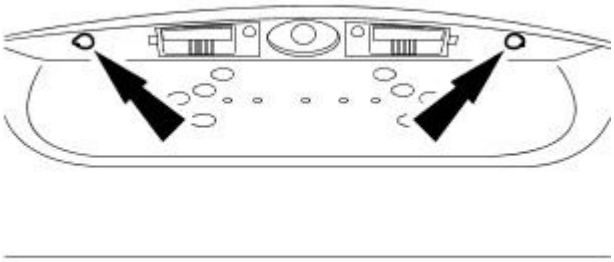

E49362

5. Remove the licence plate lamp covers.

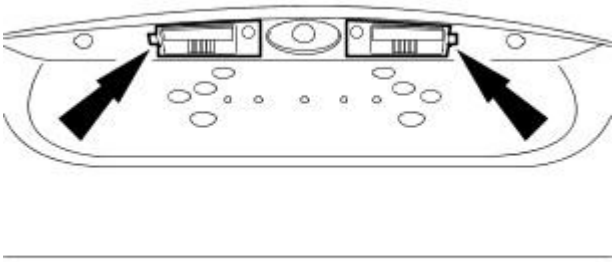

E49363

6. Remove the liftgate moulding retaining screws.

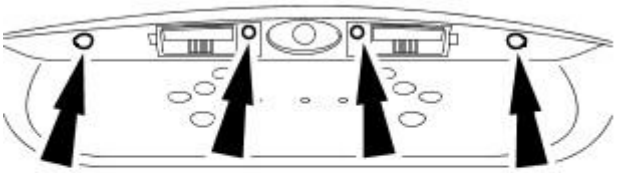

E49364

7. Detach the grommet.

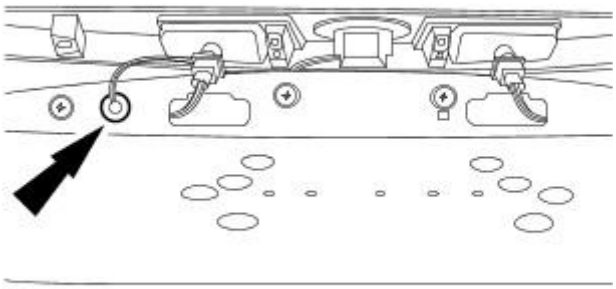

E49365

8. Remove the liftgate moulding.

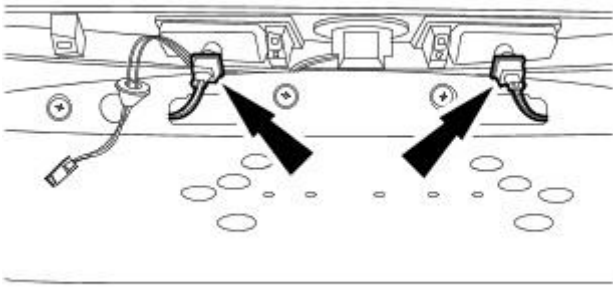

E49366

Installation

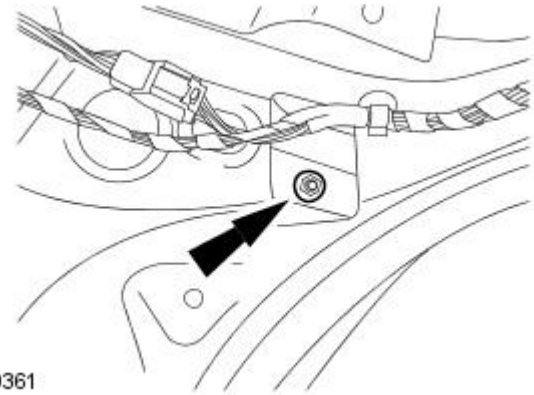

E49361

1. To install, reverse the removal procedure.

- Tighten to 3 Nm.

Exterior Trim and Ornamentation - Radiator Grille

Removal and Installation

Removal

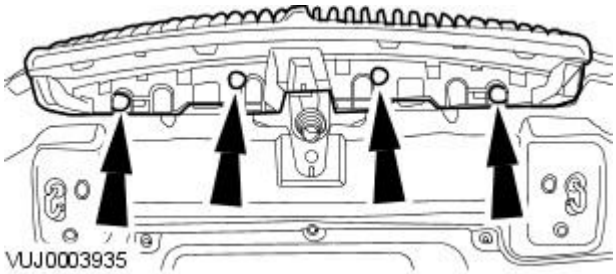

1. Remove the radiator grille.

- Remove the radiator grille retaining bolts.

Installation

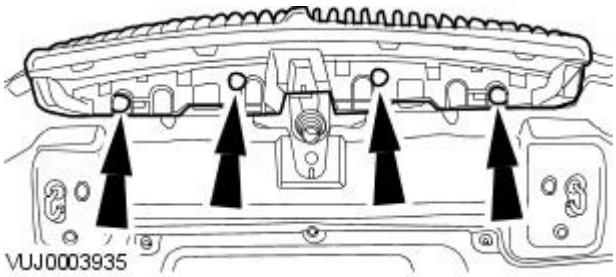

1. To install, reverse the removal procedure.

- Tighten to 7 Nm.

Exterior Trim and Ornamentation - Rear SpoilerWagon

Removal and Installation

Removal

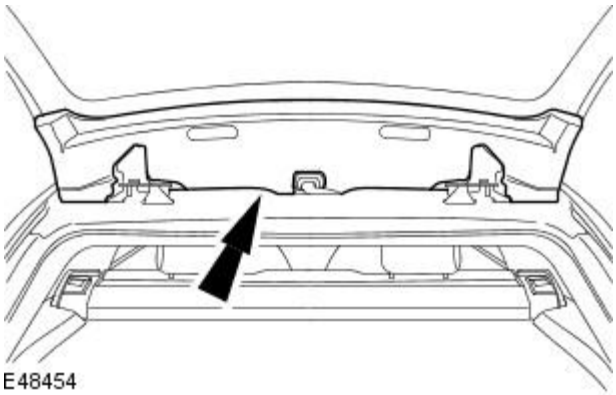

1. Remove and discard the tailgate opening window finisher trim panel.

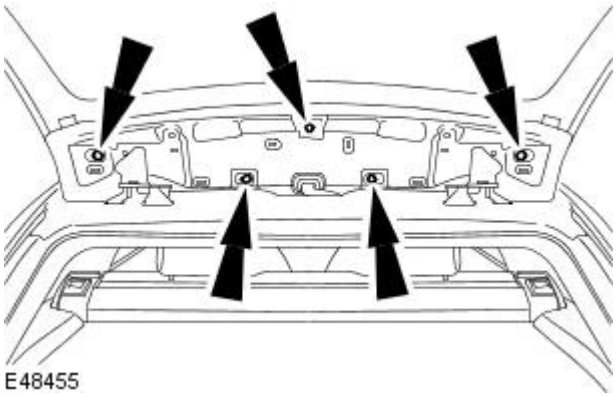

2. Remove the rear spoiler retaining nuts.

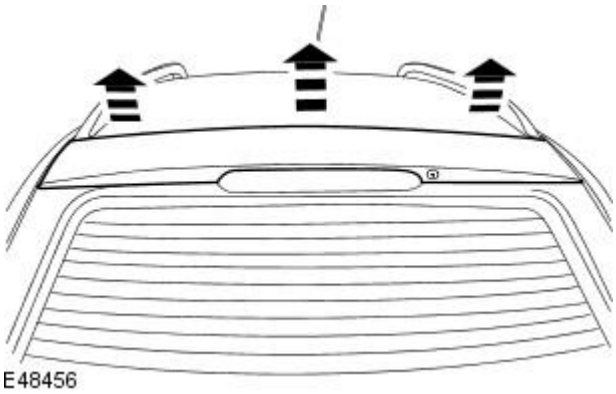

3. Detach the rear spoiler.

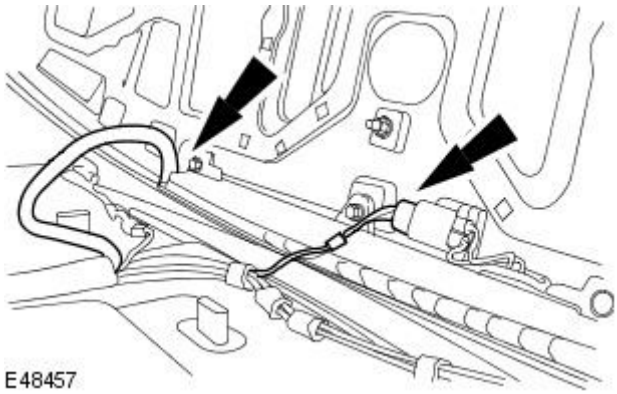

4. Remove the rear spoiler.

- Disconnect the high mounted stoplamp electrical connector.
- Disconnect the rear washer jet hose.

Installation

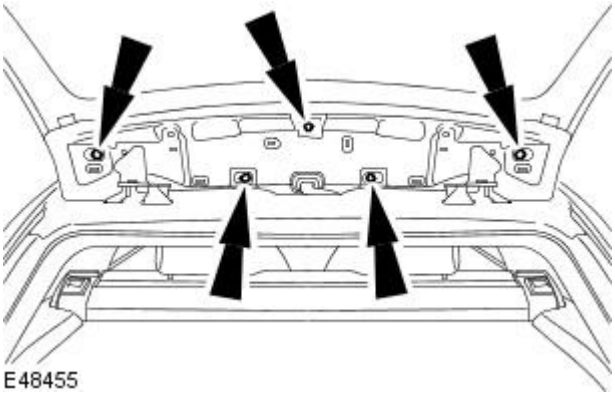

1. NOTE: A new tailgate opening window finisher trim panel must be installed.

To install, reverse the removal procedure.

- Tighten to 5 Nm.

Exterior Trim and Ornamentation - Rocker Panel Moulding

Removal and Installation

Removal

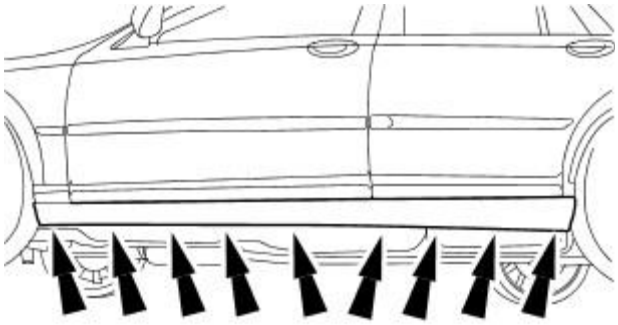

E48883

1. Remove the rocker panel moulding retaining screws.

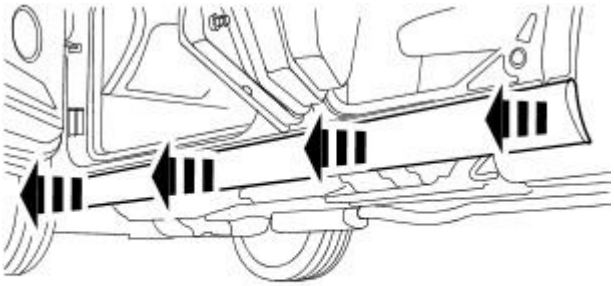

E48884

2. NOTE: Both doors will need to be open to remove the rocker panel moulding.

Remove the rocker panel moulding.

Installation

1. To install, reverse the removal procedure.

Exterior Trim and Ornamentation - Roof Rail

Removal and Installation

Removal

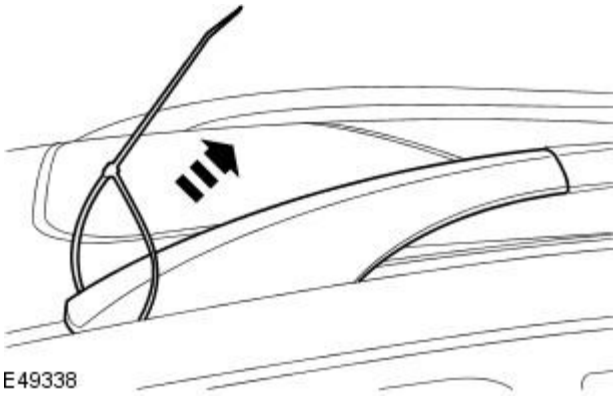

1. NOTE: Using a suitable tie strap remove the roof rail front trim.

   Remove the roof rail front trim.

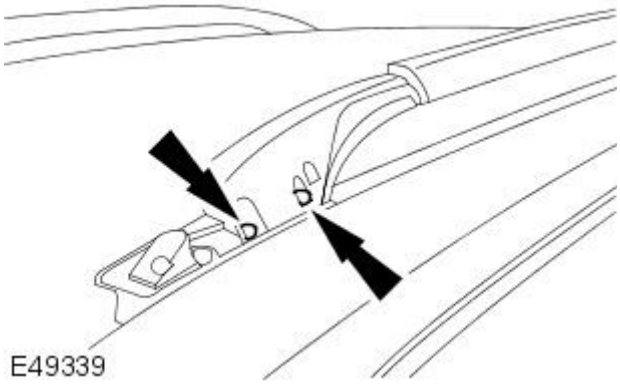

2. Remove the roof rail front retaining bolts.

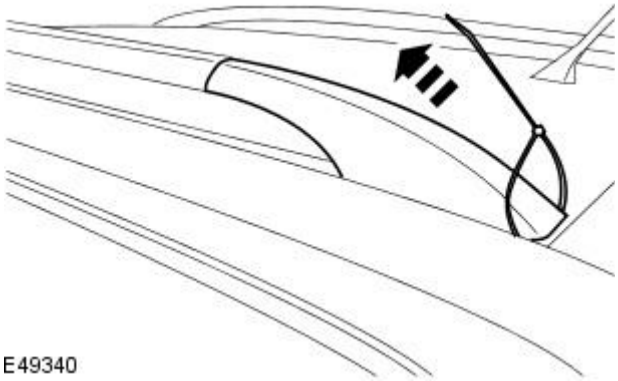

3. NOTE: Using a suitable tie strap remove the roof rail rear trim.

   Remove the roof rail rear trim.

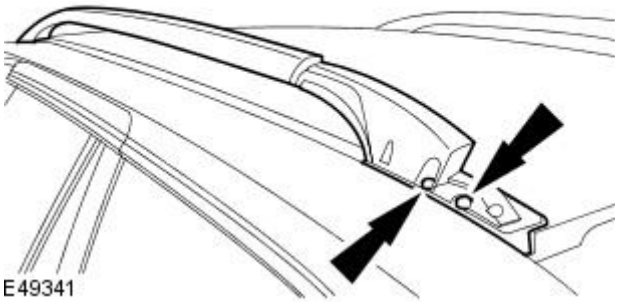

4. NOTE: Remove and discard the seals.

   Remove the roof rail.

Installation

1. NOTE: Install new seals.

To install, reverse the removal procedure.

- Tighten to 14 Nm.

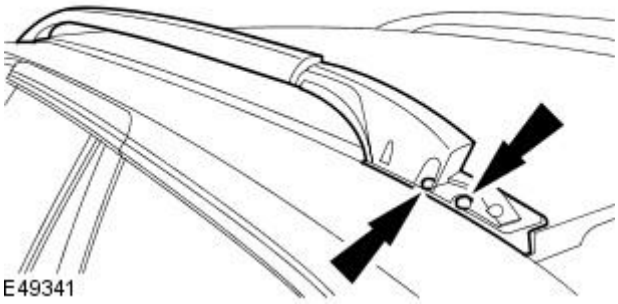

2. Tighten to 14 Nm.

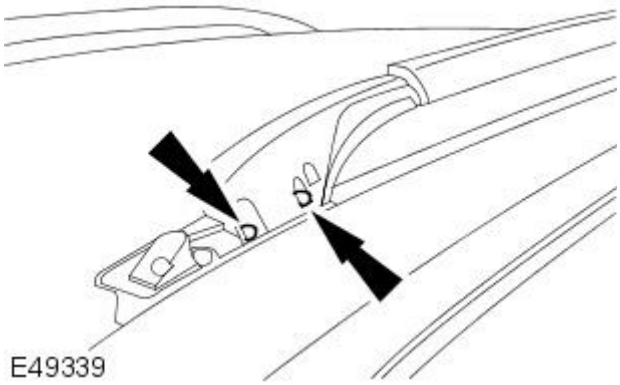

Exterior Trim and Ornamentation - Window Moulding

Removal and Installation

Removal

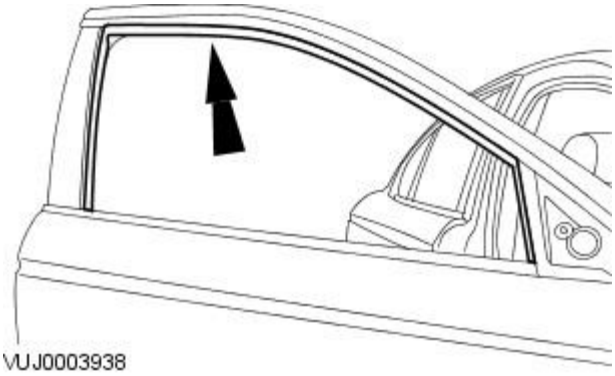

1. Detach the door window glass aperture seal.

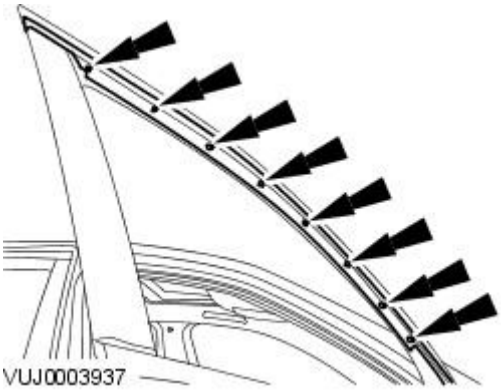

2. Remove the window moulding.

- Remove and discard the rivets.

Installation

1. NOTE: Install new rivets.

To install, reverse the removal procedure.

Published: 11-May-2011

Rear View Mirrors -

Torque Specifications

Description	Nm	lb-ft	lb-in
Exterior mirror retaining nut	12	9	-

Published: 11-May-2011

Rear View Mirrors - Rear View Mirrors

Description and Operation

The manual dipping interior mirror is a prismatic unit with mirror dipping achieved by pulling the lever forward.

Where fitted an electrochromic interior mirror will automatically darken to prevent glare from following vehicle headlamps. An ambient light sensor is fitted to the reflecting surface of the mirror to achieve automatic darkening.

During daytime driving, the ambient light sensor will detect high light levels and control the electrochromic interior mirror to provide a full, clear reflection. During night driving, the ambient light sensor will detect low light levels and automatic glare reduction will occur.

A day/night mirror sensitivity switch on the interior electrochromic mirror will allow the driver to select the sensitivity range from "MIN" (minimum) to "MAX" (maximum) sensitivity. The switch can also be set to an "OFF" position to disable all automatic glare functions.

The exterior mirrors are colour-coded, electrically adjustable and heated. Adjustment of both exterior mirrors is carried out from the driver door switch pack. A slider switch selects the mirror to be adjusted and a toggle switch adjusts the selected mirror to the required position.

Where fitted, power fold back mirrors can be operated by the mirror fold button incorporated in the driver door switch pack on the driver door trim panel. The power fold back mirrors only operate when the mirror select switch is in the middle position, and the vehicle speed is below 19 km/h (12 mph).

Vehicles from 2009MY

E100254

Vehicles built from 2009MY feature direction indicator repeaters located in the exterior rear view mirrors. The functionality and operation of the direction indicator repeaters remains the same as the previous fender mounted items.

The direction indicator repeater bulb is accessed by removal of the mirror glass and backplate.

Published: 11-May-2011

Rear View Mirrors - Rear View Mirrors

Diagnosis and Testing

Inspection and Verification

1. **1.** Verify the customer concern.
2. **2.** Visually inspect for obvious signs of electrical damage.

Visual Inspection Chart

Electrical
• Electrical connector(s) • Wiring harness for damage or corrosion • Switch(s) • Motor assembly • Electrochromic interior mirror

3. **3.** If an obvious cause for an observed or reported concern is found, correct the cause (if possible) before proceeding to the next step.
4. **4.** If the cause is not visually evident, verify the symptom and refer to the Jaguar Approved Diagnostic System.

Rear View Mirrors - Auto-Dimming Interior Mirror

Removal and Installation

Removal

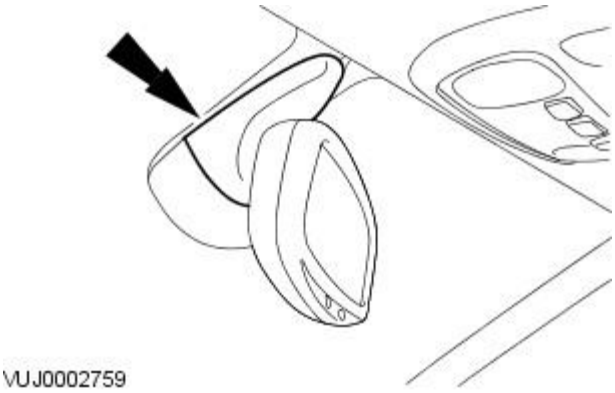

1. Detach the interior mirror trim panel.

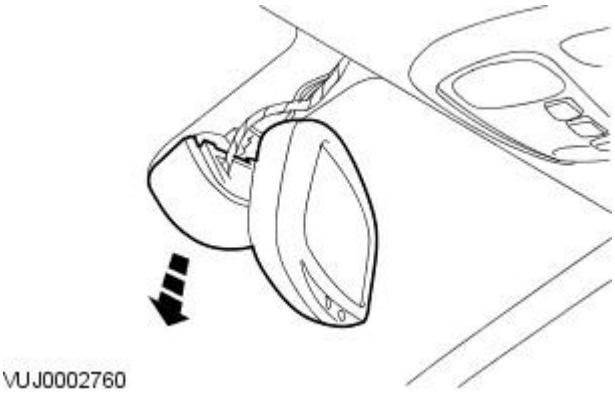

2. Detach the interior mirror.

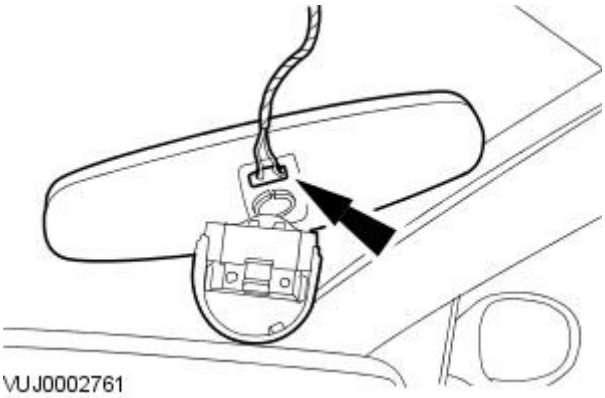

3. Remove the interior mirror.

- Disconnect the interior mirror electrical connector.

Installation

1. To install, reverse the removal procedure.

Rear View Mirrors - Exterior Mirror

Removal and Installation

Removal

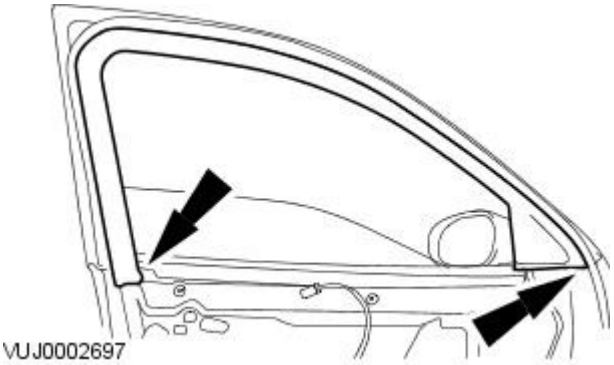

1. Remove the front door trim panel. For additional information, refer to Section 501-05 Interior Trim and Ornamentation.
2. Remove the window surround trim panel.

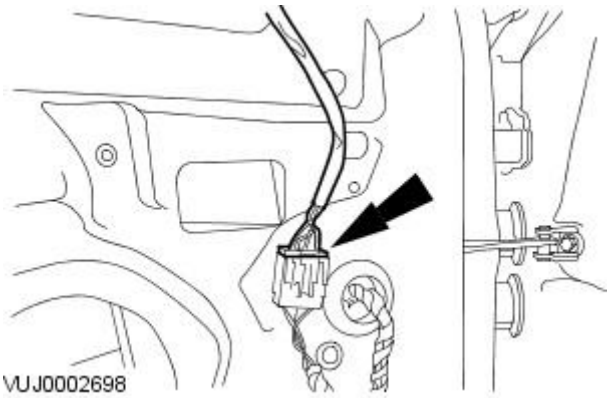

3. Disconnect the exterior mirror electrical connector.

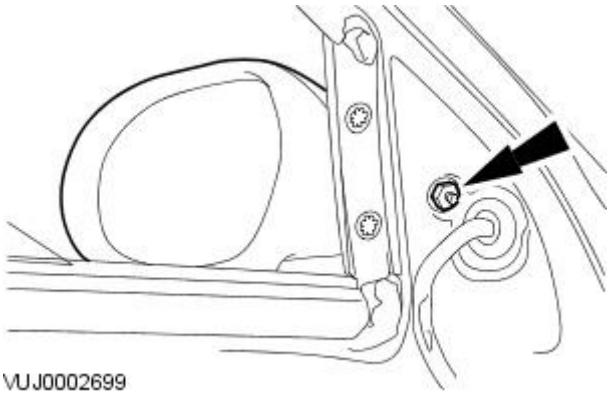

4. NOTE: Support the exterior mirror while removing the exterior mirror retaining nut.

   Detach the exterior mirror.

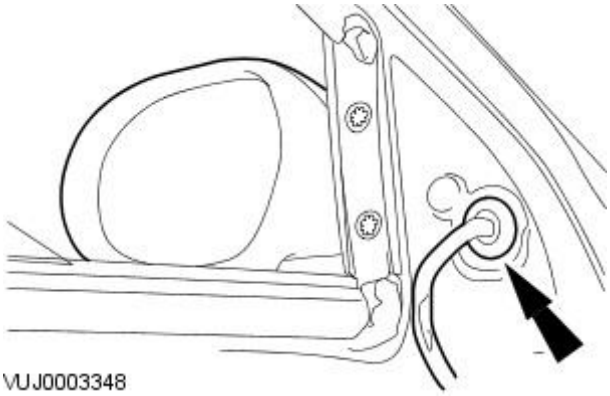

5. Remove the exterior mirror.
   - Detach the grommet.

Installation

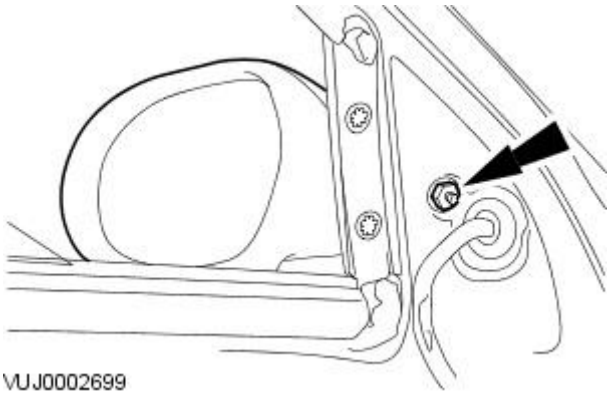

1. To install, reverse the removal procedure.

- Tighten to 12 Nm.

Rear View Mirrors - Exterior Mirror Control Switch

Removal and Installation

Removal

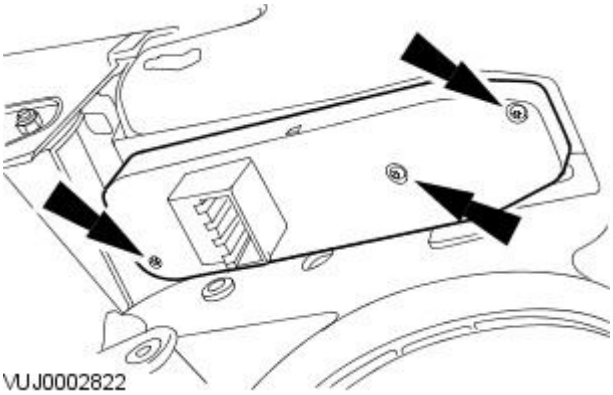

1. Remove the front door trim panel. For additional information, refer to Section 501-05 Interior Trim and Ornamentation.
2. Remove the exterior mirror control switch.

Installation

1. To install, reverse the removal procedure.

Rear View Mirrors - Exterior Mirror Cover

Removal and Installation

Removal

1. Remove the exterior mirror glass. For additional information, refer to Exterior Mirror Glass.
2. Apply light pressure to the inner edge of the exterior mirror cover.

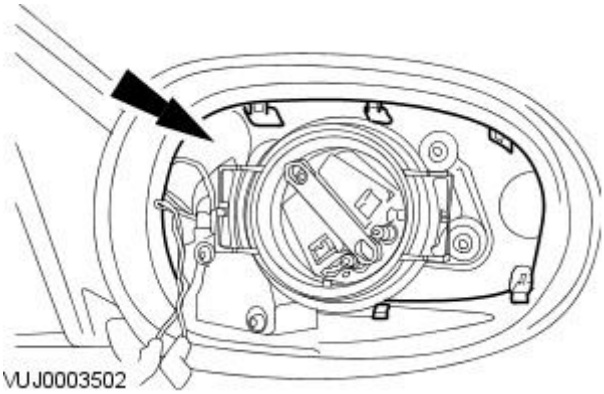

3. Detach the outer edge of the exterior mirror cover.

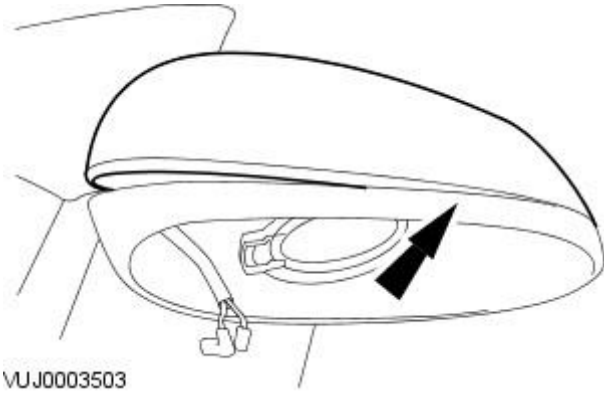

4. Remove the exterior mirror cover.

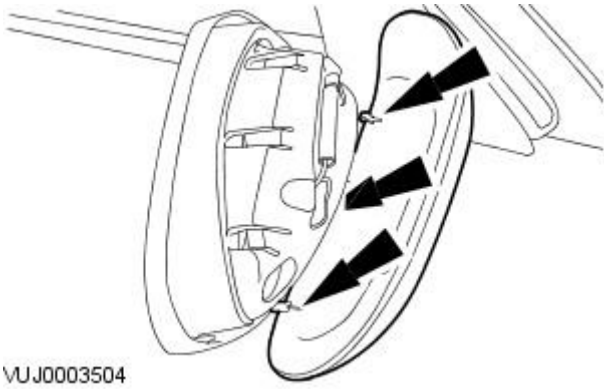

Installation

1. To install, reverse the removal procedure.

Rear View Mirrors - Exterior Mirror Glass

Removal and Installation

Removal

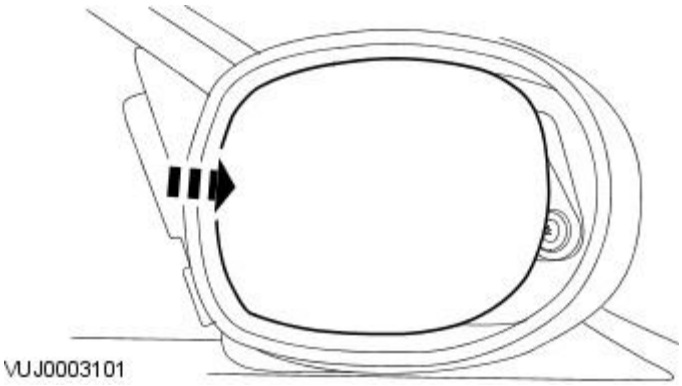

1. Apply light pressure to the mirror glass.

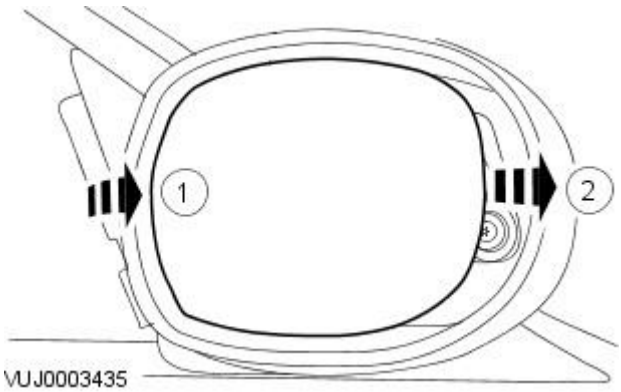

2. Detach the mirror glass.

1. Apply light pressure to the inner edge of the mirror glass.
2. Pull the outer edge of the mirror glass to detach the mirror glass.

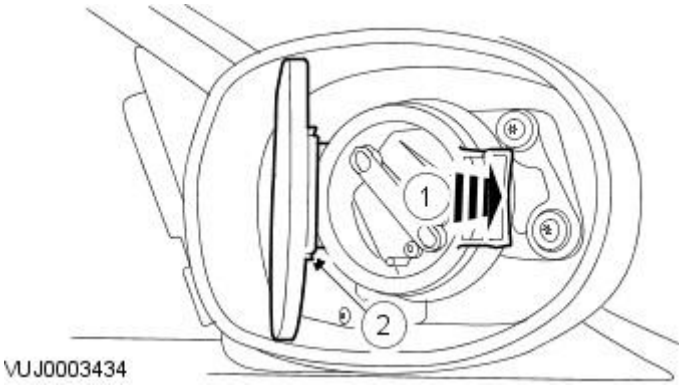

3. Detach the exterior mirror glass.

1. Reposition the mirror glass motor.
2. Detach the exterior mirror glass.

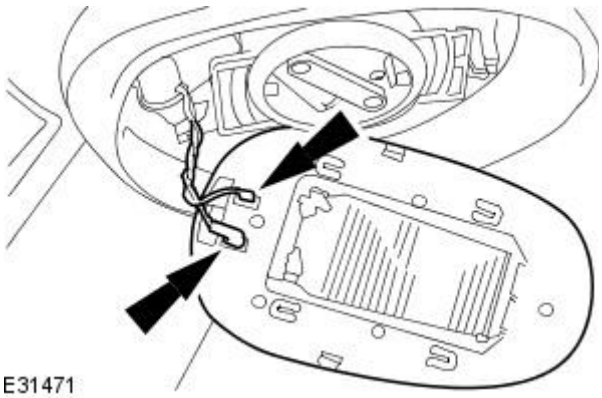

4. Remove the exterior mirror glass.

- Disconnect the mirror glass heater electrical connectors.

Installation

1. To install, reverse the removal procedure.

Rear View Mirrors - Exterior Mirror Motor

Removal and Installation

Removal

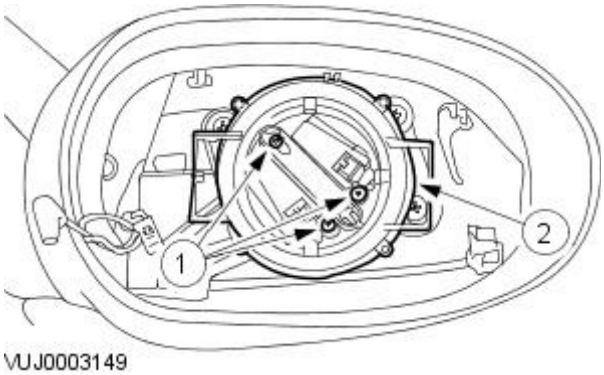

VUJ0003149

1. Remove the exterior mirror glass. For additional information, refer to Exterior Mirror Glass.
2. Detach the exterior mirror motor.
    1. Remove the exterior mirror motor retaining screws.
    2. Detach the exterior mirror motor.

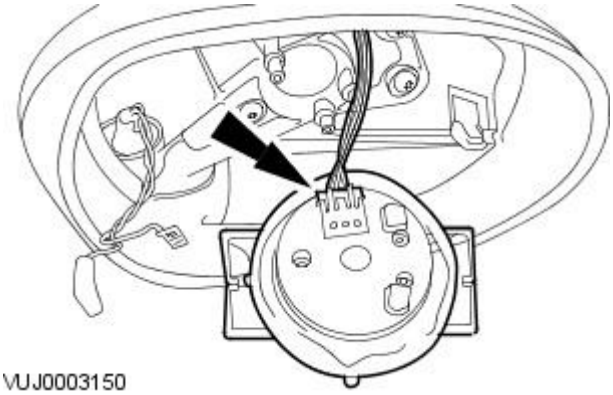

VUJ0003150

3. Remove the exterior mirror motor.
    - Disconnect the exterior mirror motor electrical connector.

Installation

1. To install, reverse the removal procedure.

Rear View Mirrors - Interior Mirror

Removal and Installation

Removal

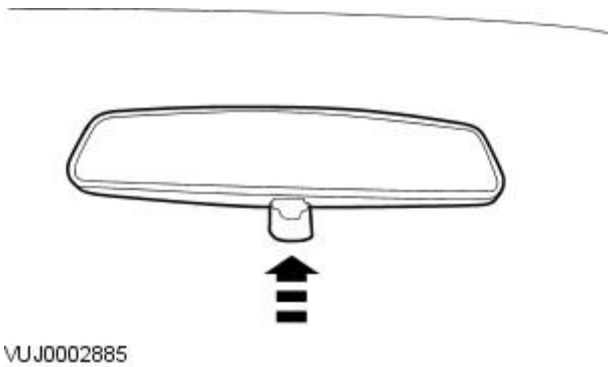

1. Remove the interior mirror.

Installation

1. To install, reverse the removal procedure.

Seating -

Torque Specifications

Description	Nm	lb-ft	lb-in
Front seat retaining bolts	20	15	-
Front seat backrest retaining bolts	25	18	-
Front seat cushion retaining nuts	15	11	-
Front seat track motor retaining bolt	10	7	-
Front seat cushion front height adjustment motor retaining bolt	10	7	-
Front seat cushion rear height adjustment motor retaining bolts	10	7	-
Front safety belt lower anchor retaining bolt	55	41	-
Front seat safety belt pretensioner retaining bolt	50	37	-
Fixed rear seat backrest retaining bolts	55	41	-
Fixed rear seat retainer block bolt	20	15	-
Folding rear seat backrest hinge retaining bolts - All vehicles	55	41	-
Folding rear seat backrest centre hinge plate retaining bolts - Wagon	23	17	-
Folding rear seat latch retaining bolts - 4-door vehicles	22	16	-
Folding rear seat latch retaining bolts - Wagon	32	24	-
Rear center safety belt retractor retaining bolt - 4-door vehicles	55	41	-
Rear center safety belt retractor retaining bolt - Wagon	38	28	-
Rear center safety belt buckle retaining bolt - All vehicles	55	41	-

Seating - Seats

Description and Operation

Front Seat - High Specification, Vehicles without Seat Position Memory

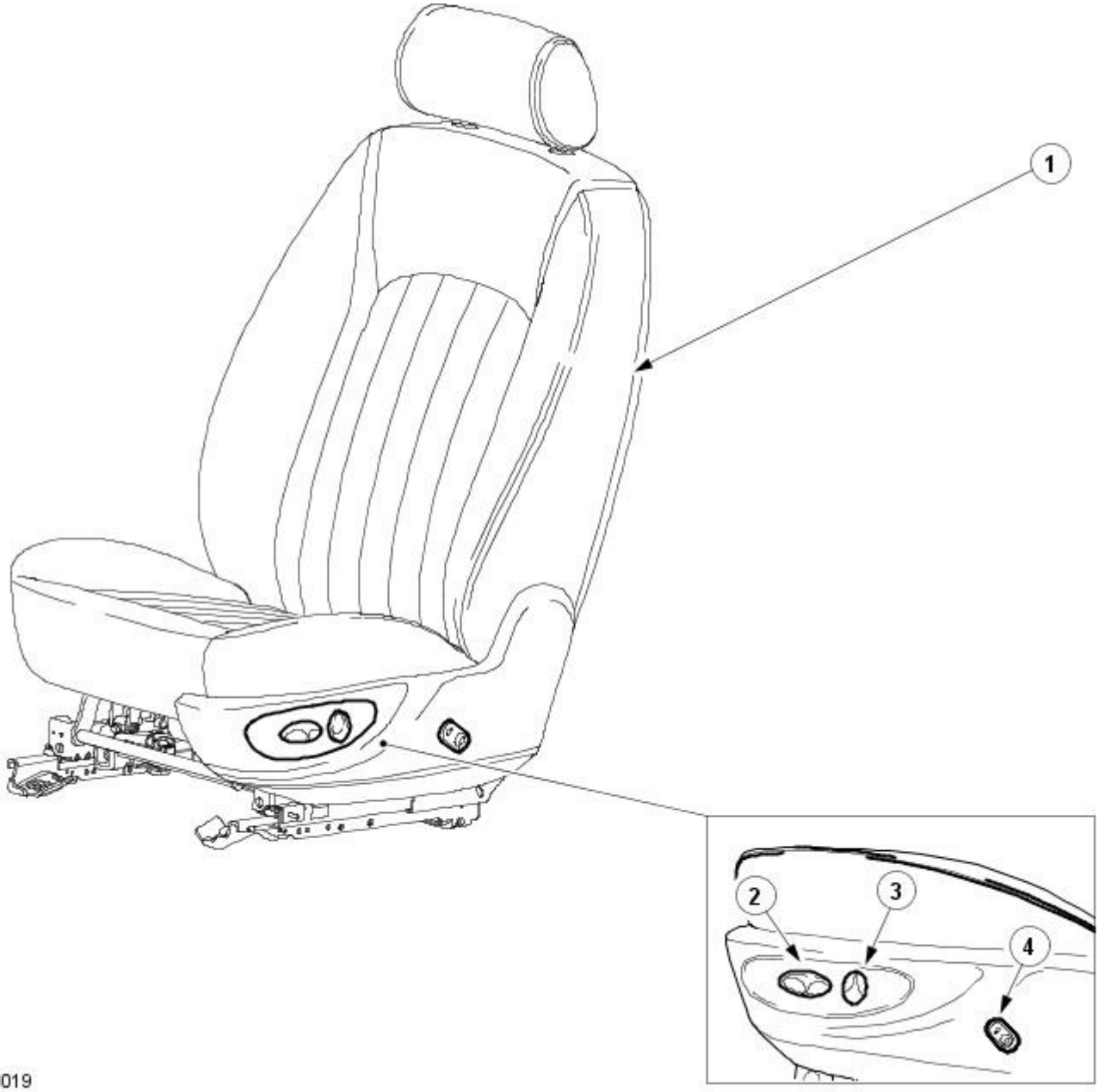

Item	Part Number	Description
1	—	Front seat
2	—	Front seat track and cushion front/rear height adjustment switch
3	—	Front seat backrest recliner switch
4	—	Front seat lumbar support switch

Front Seat - High Specification, Vehicles with Seat Position Memory

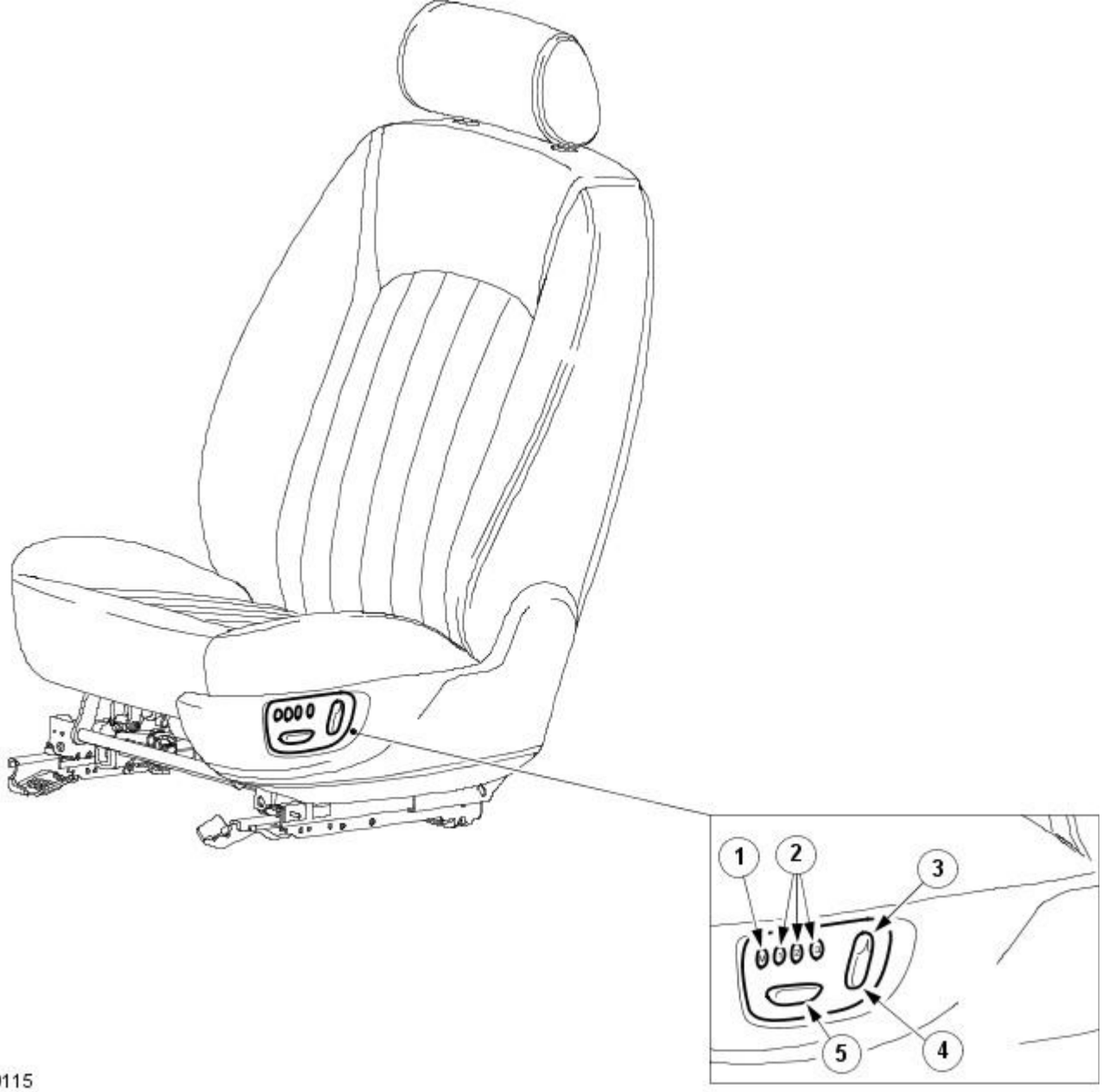

E49115

Item	Part Number	Description
1	—	Front seat memory store switch
2	—	Front seat memory switch
3	—	Front seat backrest recliner switch
4	—	Front seat lumbar support switch
5	—	Front seat track and cushion front/rear height adjustment switch

Front Seat - Low Specification

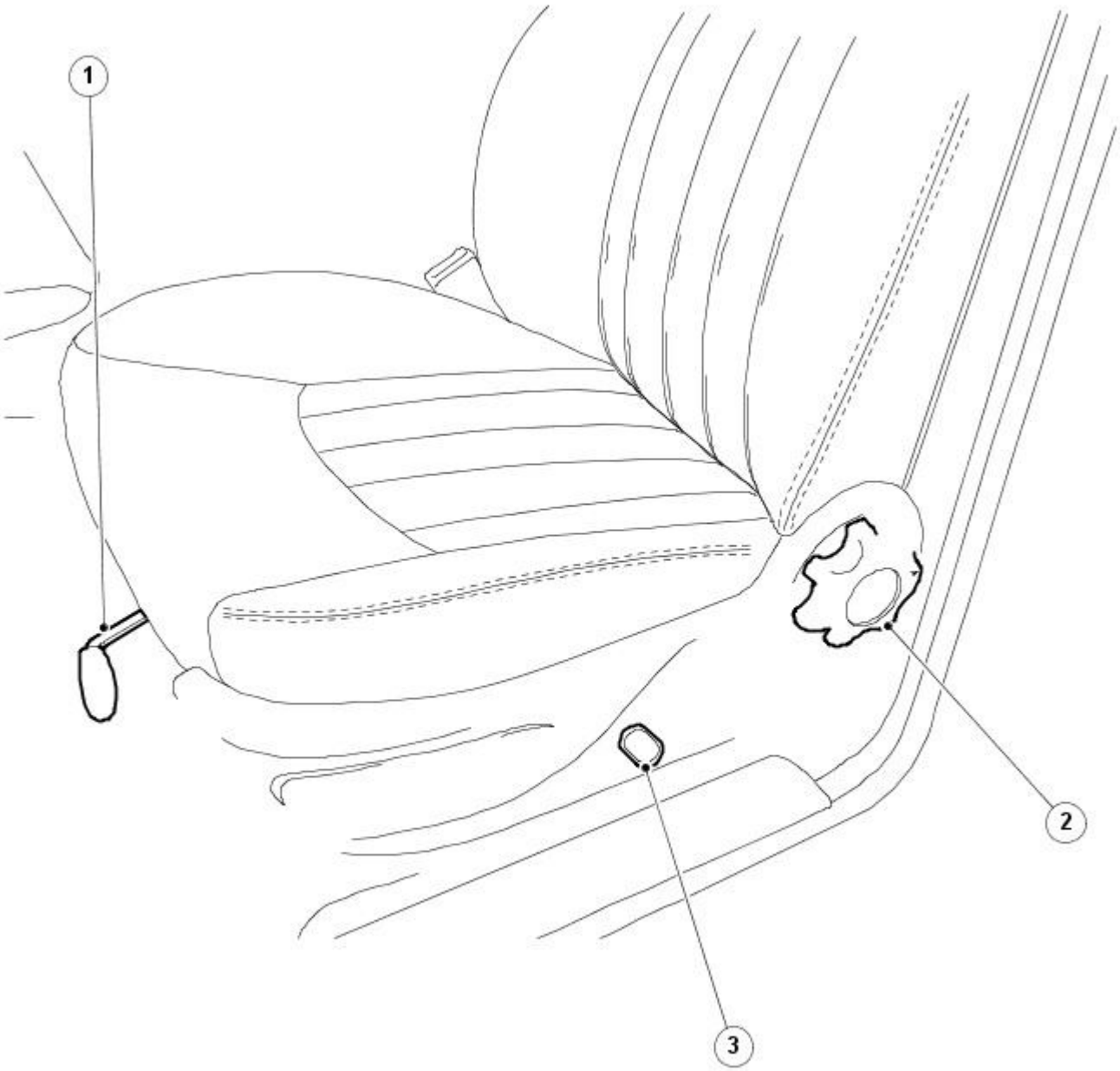

VUJ0004650

Item	Part Number	Description
1	—	Front seat track adjustment locking bar
2	—	Front seat backrest recliner hand wheel
3	—	Front seat cushion height adjustment switch (Driver side only)

4-Door, Vehicles with 70/30 Split Seat

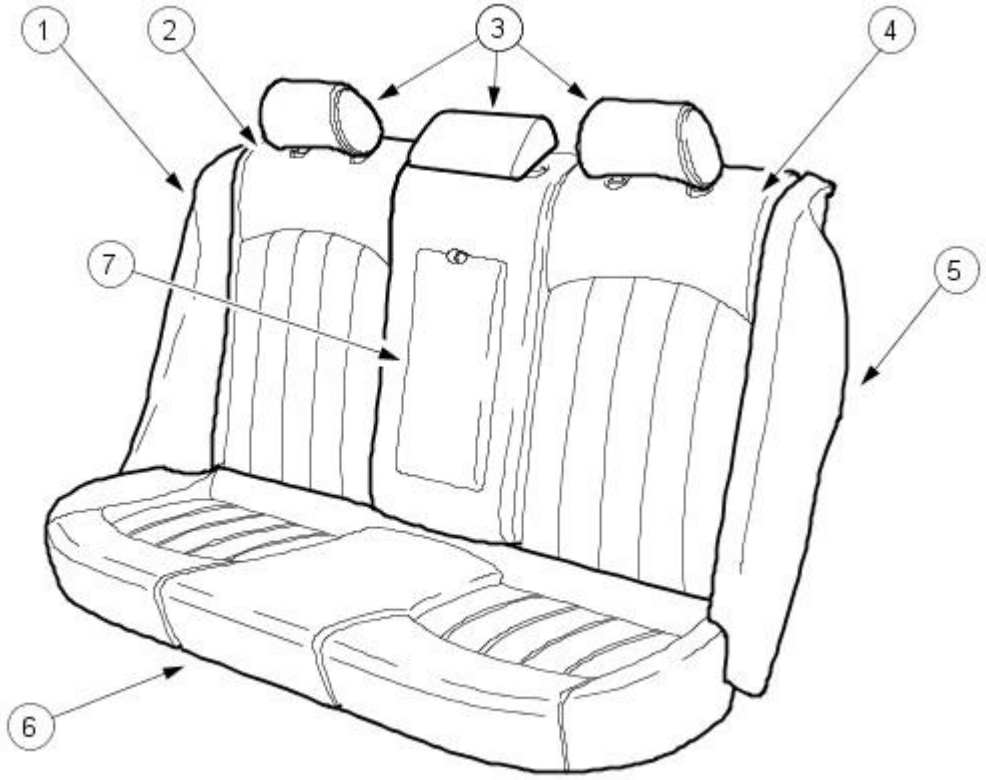

VUJ0004653

Item	Part Number	Description
1	—	Rear seat backrest bolster - RH
2	—	Rear seat backrest
3	—	Rear seat head restraints (Center rear seat head restraint is optional)
4	—	Rear seat backrest
5	—	Rear seat backrest bolster - LH
6	—	Rear seat cushion
7	—	Rear seat center arm rest

4-Door, Vehicles without 70/30 Split Seat

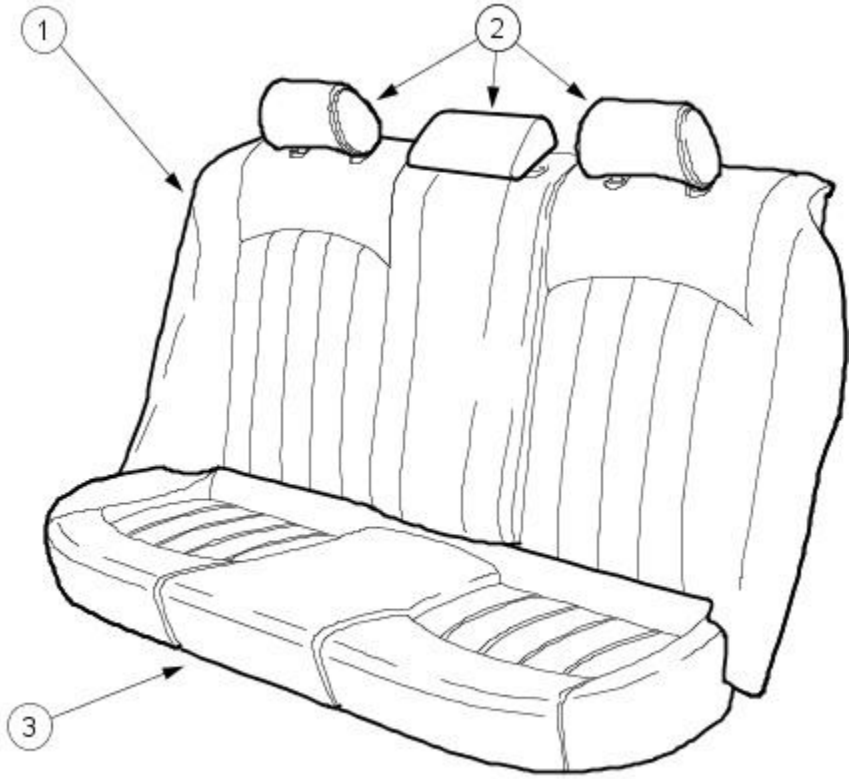

VUJ0004654

Item	Part Number	Description
1	—	Rear seat backrest
2	—	Rear seat head restraints (Center rear seat head restraint is optional)
3	—	Rear seat cushion

Wagon

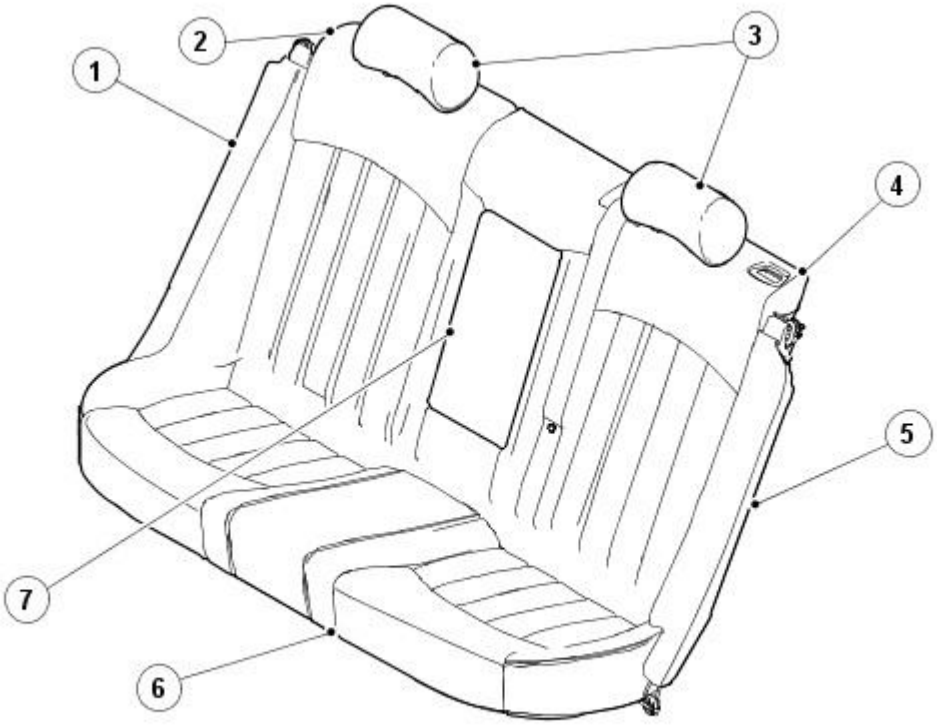

E48419

Item	Part Number	Description
1	—	Rear seat backrest bolster - RH
2	—	Rear seat backrest
3	—	Rear seat head restraints (Center rear seat head restraint is optional)
4	—	Rear seat backrest
5	—	Rear seat backrest bolster - LH
6	—	Rear seat cushion
7	—	Rear seat center arm rest

Driver Front Seat - High Specification

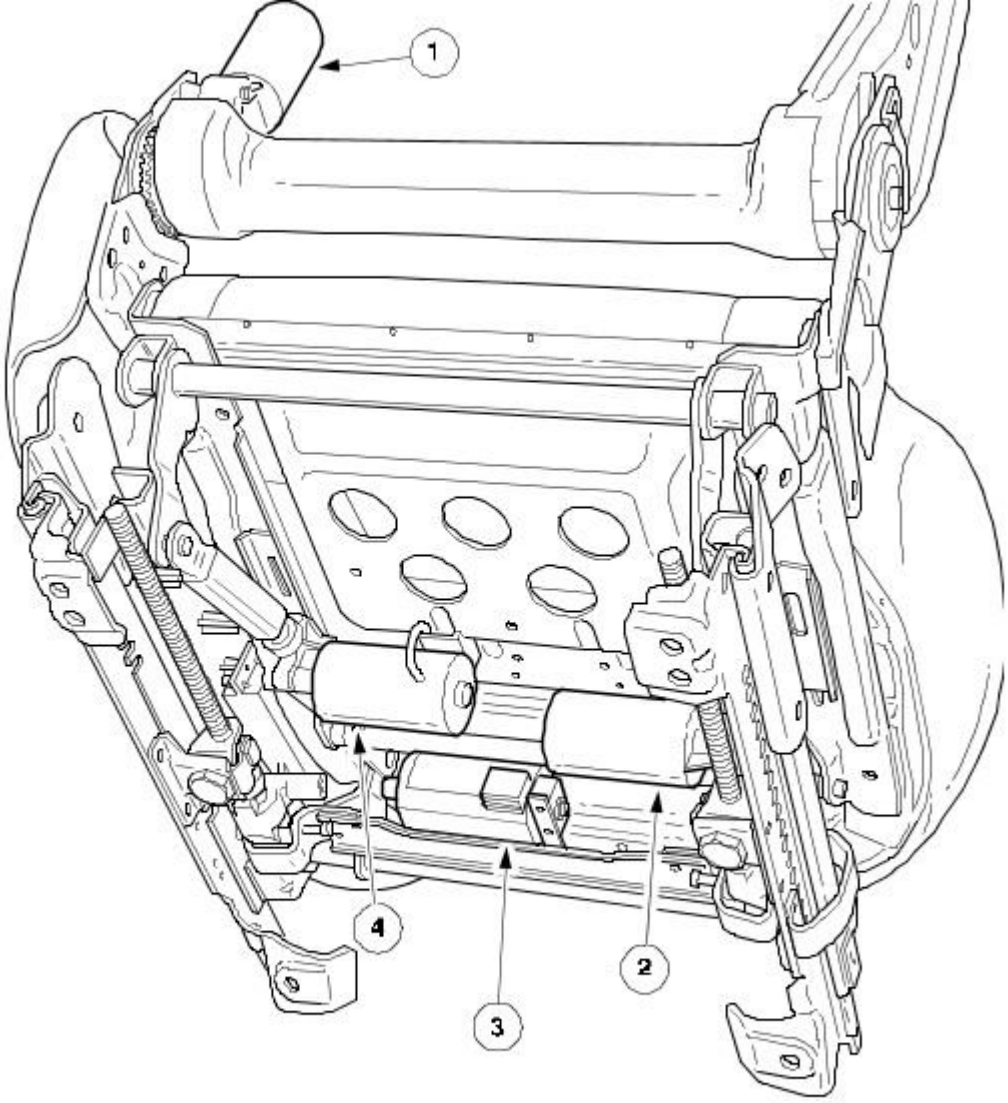

VUJ0004655

Item	Part Number	Description
1	—	Front seat backrest recliner motor
2	—	Front seat cushion front height adjustment motor
3	—	Front seat track motor
4	—	Front seat cushion rear height adjustment motor

Passenger Front Seat - High Specification

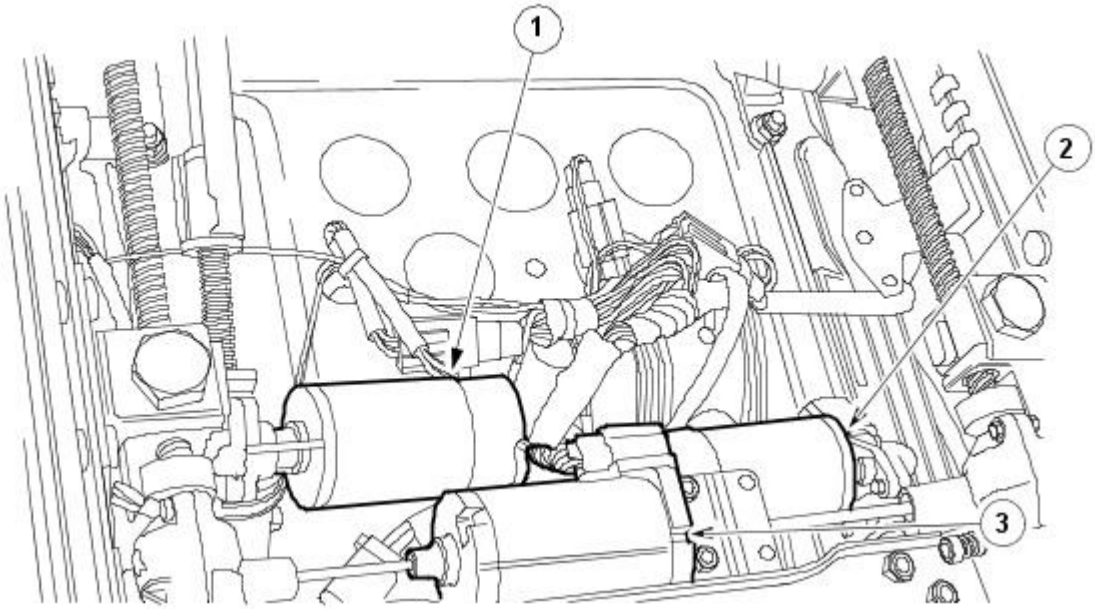

E49990

Item	Part Number	Description
1	—	Front seat cushion rear height adjustment motor
2	—	Front seat cushion front height adjustment motor
3	—	Front seat track motor

Front Seat Lumbar Support

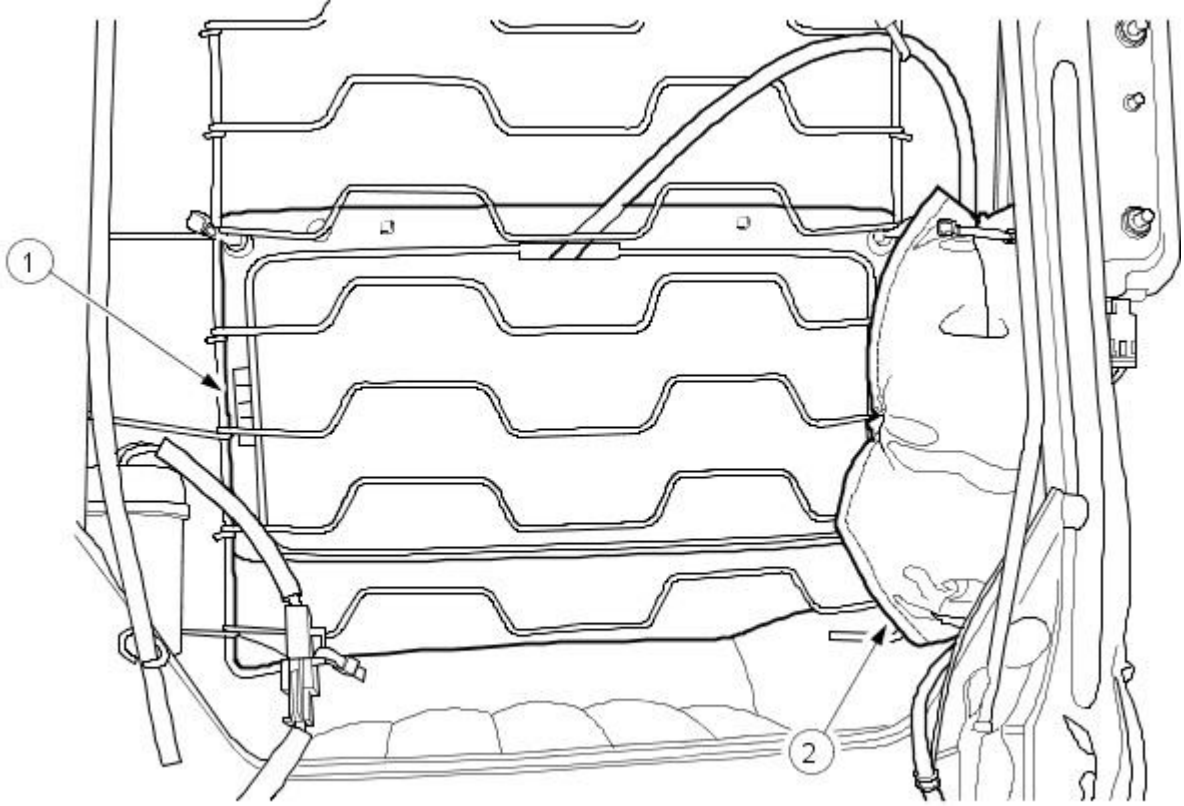

VUJ0004656

Item	Part Number	Description
1	—	Front seat lumbar support bag
2	—	Front seat lumbar motor

Passenger Front Seat Weight Sensing system

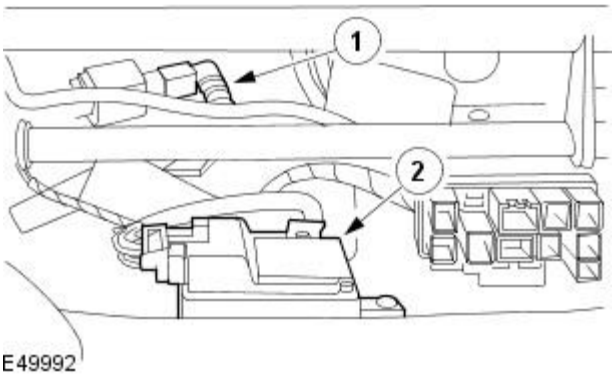

E49992

Item	Part Number	Description
1	—	Front seat weight sensor
2	—	Front seat weight sensor module

Heated Seat Module - High Specification, Vehicles without Seat Position Memory

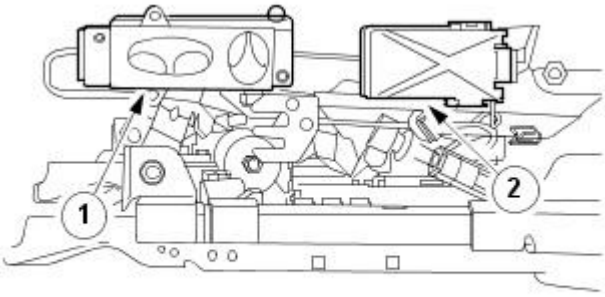

E50015

Item	Part Number	Description
1	—	Seat Control Switch
2	—	Heated Seat Module

Front Seats

All front seats are fitted with the following features as standard:

- integral side air bags
- head restraints
- safety belt buckle/pretensioner

The driver and passenger seats, although almost identical, have some unique components fitted. The driver seat has a seat track position

sensor and the passenger seat has a weight sensing system. In both instances the components form an integral part of the occupant restraint system.
For additional information, refer to: Seat Position Sensor (501-20B Supplemental Restraint System, Removal and Installation) / Occupant Classification Sensor (501-20B Supplemental Restraint System, Removal and Installation).

The high option front seat has the following features:

- electrically adjustable seat positioning
- electrically adjustable lumbar support (optional)
- heated seat (optional)

The basic option front seat has the following standard features:

- electrically adjustable seat height positioning (driver seat only)
- heated seat (optional)

Seat Position Memory (Optional)

The seat position memory can be programmed for up to three different driver seat configurations and the seat memory switch, located in the seat control switch pack, can be used to store and retrieve the programmed configurations.

The seat position memory front seat has the following features:

- electrically adjustable seat positioning with three position memory
- electrically adjustable lumbar support
- heated seat (optional)

Heated Seats (Optional)

The heated seat system comprises:

- heated seat module (incorporated in the seat control switch pack on vehicles with seat position memory)
- heated seat switches
- backrest heater element
- cushion heater element and thermostat

The heated seat function permits the electrical heating of the seat back and cushion on the driver and front passenger seats. The heating system of each seat is selected by separate switches located at the top of the center console.

Pressing the appropriate switch activates the first stage of a three stage operation of the heated seat function:

- one press of the switch activates the high setting (providing a seat surface temperature of approximately 42°C).
- a second press of the switch activates the low setting (providing a seat surface temperature of approximately 37°C).
- a third press of the switch deactivates the heating function.

Once the heated seat function has been activated, it will persist until one of the following conditions have been satisfied:

- A fixed period of time has expired (10 minutes).
- The engine is not running.
- The function is deactivated by pressing the switch for a third time.
- A malfunction is detected by the heated seat module.

Confirmation that the heated seat function is active is indicated by the illumination of the relevant switch, a yellow light indicates the low temperature setting and a red light indicates the high temperature setting.

Heated Seat Module

The heated seat module is located behind the outer side trim panel of the front seat on vehicles without seat position memory, and is incorporated in to the seat control switch pack on vehicles with seat position memory. The module controls the seat heating function by providing the appropriate response depending on the status of the heated seat switches.

Power Lumbar Support

The power lumbar is a self-contained unit controlled directly by the seat mounted power lumbar switch. On vehicles with seat position memory, the power lumbar switch is incorporated in to the recliner switch in the seat control switch pack.

Rear Seats - 4-Door

Depending on the market specification the rear seats will be one of the following:

- fixed bench style seat
- folding 70/30 split seat

Folding Seatbacks (if equipped)

The rear seatbacks can be folded forward to provide additional luggage space if required. Release handles for each seat back are located in the luggage compartment under the parcel shelf on 4-door vehicles, and on the top of the each seatback on wagon.

Rear Seats - Wagon

The rear seats on wagon are of the folding type with a 70/30 split, fitted with a folding armrest in the left-hand seat backrest. The left-hand seat also incorporates the rear centre safety belt retractor, which has a release cable connected to the rear seat backrest latch to prevent the safety belt from operating if the rear seat backrest is not in the fully latched position.

Head Restraints

The front seat head restraints are adjustable for height and forward and rearward tilt.

The rear seat head restraints can be set to one of two height positions. The optional centre rear seat head restraint (excluding Federal specification vehicles) can also be set to one of two height positions.

Ski Hatch - 4-Door Vehicles only (if equipped)

Skis or similar objects can be stowed in the vehicle by utilizing the two door hatch fitted to the rear seat. The inner door is accessible after folding down the armrest, the second door is accessible from inside the luggage compartment. A sack complete with strap is provided for holding the stored items, the strap connects to the center rear seat belt buckle to secure the sack and contents.

Seating - Seats

Diagnosis and Testing

1. **1.** Verify the customer concern by operating the system.
2. **2.** Visually inspect for obvious signs of mechanical or electrical damage.

Visual Inspection Chart

Mechanical	Electrical
• Seat base • Seat backrest • Seat track(s) • Lumbar assembly bag	• Fuse(s) • Wiring harness • Electrical connector(s) • Motor(s) • Switch(es) • Heated seat module • Lumbar assembly pump

3. **3.** If an obvious cause for an observed or reported concern is found, correct the cause (if possible) before proceeding to the next step.
4. **4.** If the concern is not visually evident, verify the symptom and refer to the symptom chart.

Symptom Chart

Symptom Chart

Symptom	Possible Sources	Action
The power seat is inoperative - high specification seat only	* Seat control switch.	* CARRY OUT the Seat Control Switch Component Test. REFER to the Wiring Diagrams.
	* Circuit(s). * Motor(s).	* GO to Pinpoint Test A.
The power seat is inoperative - low specification seat only	* Seat control switch.	* CARRY OUT the Seat Control Switch Component Test. REFER to the Wiring Diagrams.
	* Circuit(s). * Motor(s).	* GO to Pinpoint Test B.
The power seat does not move horizontally - high specification seat only	* Seat control switch.	* CARRY OUT the Seat Control Switch Component Test. REFER to the Wiring Diagrams.
	* Circuit(s). * Motor(s).	* GO to Pinpoint Test C.
The power seat does not move vertically - high specification seat only	* Seat control switch.	* CARRY OUT the Seat Control Switch Component Test. REFER to the Wiring Diagrams.
	* Circuit(s). * Motor(s).	* GO to Pinpoint Test D.
The power seat does not recline - high specification seat only	* Seat control switch.	* CARRY OUT the Seat Control Switch Component Test. REFER to the Wiring Diagrams.
	* Circuit(s). * Motor(s).	* GO to Pinpoint Test E.
The power lumbar is inoperative - high specification seat only	* Seat control switch.	* CARRY OUT the Seat Control Switch Component Test. REFER to the Wiring Diagrams.
	* Lumbar assembly bag	* INSPECT the seat lumbar assembly bag. INSTALL a new lumbar assembly as necessary. For additional information, refer to Lumbar Assembly.
	* Circuit(s). * Motor(s).	* GO to Pinpoint Test F.

Pinpoint Tests

• NOTE: Use a digital multimeter for all electrical measurements.

PINPOINT TEST A : THE POWER SEAT IS INOPERATIVE - HIGH SPECIFICATION SEAT	
TEST CONDITIONS	**DETAILS/RESULTS/ACTIONS**
A1: CHECK THE FRONT SEAT OPERATION	
	1 Operate the LH seat control switch
	Is the LH seat inoperative? **Yes** GO to A2. . **No** GO to A4. .
A2: CHECK THE VOLTAGE TO THE SEAT CONTROL SWITCH	
	1 Switch the ignition switch to the OFF position.
	2 Disconnect the seat control switch electrical connector LS1.
	3 Switch the ignition switch to the ON position.
	4 Measure the voltage between the seat control switch electrical connector LS1 pin 6, (OG), and ground.
	Is the voltage greater than 10 volts? **Yes** GO to A3. . **No** REPAIR the circuit. TEST the system for normal operation.
A3: CHECK THE SEAT CONTROL SWITCH GROUND CIRCUIT	
	1 Measure the resistance between the seat control switch electrical connector LS1 pin 1, (B), and ground.
	Is the resistance less than 5 ohms? **Yes** INSTALL a new seat control switch. For additional information, refer to Seat Control Switch. **No** REPAIR the circuit. TEST the system for normal operation.
A4: CHECK THE VOLTAGE TO THE SEAT CONTROL SWITCH	
	1 Switch the ignition switch to the OFF position.

	2 Disconnect the seat control switch electrical connector RS1.
	3 Switch the ignition switch to the ON position.
	4 Measure the voltage between the seat control switch electrical connector RS1 pin 6, (OY), and ground.
	Is the voltage greater than 10 volts? **Yes** GO to A5. . **No** REPAIR the circuit. TEST the system for normal operation.
A5: CHECK THE SEAT CONTROL SWITCH GROUND CIRCUIT	
	1 Measure the resistance between the seat control switch electrical connector RS1 pin 1, (B), and ground.
	Is the resistance less than 5 ohms? **Yes** INSTALL a new seat control switch. For additional information, refer to Seat Control Switch. **No** REPAIR the circuit. TEST the system for normal operation.

PINPOINT TEST B : THE POWER SEAT IS INOPERATIVE - LOW SPECIFICATION SEAT ONLY	
TEST CONDITIONS	**DETAILS/RESULTS/ACTIONS**
B1: CHECK THE LH FRONT SEAT HEIGHT ADJUSTMENT MOTOR OPERATION	
	1 Operate the LH seat control switch to the UP position.
	Is the LH seat height adjustment inoperative? **Yes** GO to B2. . **No** GO to B8. .
B2: CHECK THE LH SEAT CONTROL SWITCH POWER SUPPLY	
	1 Disconnect the seat control switch electrical connector LS16.
	2 Measure the voltage between the seat control switch electrical connector LS16 pin 2, (OG), and ground.
	Is the voltage greater than 10 volts? **Yes** GO to B3. . **No** REPAIR the circuit. TEST the system for normal operation.
B3: CHECK THE LH SEAT CONTROL SWITCH GROUND CIRCUIT	
	1 Measure the resistance between the seat control switch electrical connector LS16 pin 3, (B), and ground and between LS16 pin 6, (B), and ground.
	Are the resistances less than 5 ohms? **Yes** GO to B4. . **No** REPAIR the circuit. TEST the system for normal operation.
B4: CHECK THE LH SEAT HEIGHT ADJUSTMENT MOTOR CIRCUITS	
	1 Disconnect the seat height motor electrical connector LS10.
	2 Operate the seat control switch to the UP position.
	3 Measure the voltage between the seat height motor electrical connector LS10 pin 1, (YG), and LS10 pin 2, (WG).
	Is the voltage greater than 10 volts? **Yes** INSTALL a new front seat height motor. TEST the system for normal operation. **No** GO to B5. .
B5: CHECK THE LH SEAT HEIGHT ADJUSTMENT MOTOR CIRCUIT	
	1 Operate the seat control switch to the UP position.
	2 Measure the voltage between the seat height motor electrical connector LS10 pin 1, (YG), and ground.
	Is the voltage greater than 10 volts? **Yes** GO to B6. . **No** GO to B7. .
B6: CHECK THE LH SEAT HEIGHT ADJUSTMENT MOTOR CIRCUIT FOR OPEN	
	1 Disconnect the seat control switch electrical connector LS16.
	2 Measure the resistance between the seat height motor electrical connector LS10 pin 2, (WG), and the seat control switch electrical connector LS16 pin 7, (WG).
	Is the resistance less than 5 ohms? **Yes** INSTALL a new seat control switch. TEST the system for normal operation. **No** REPAIR the circuit. TEST the system for normal operation.
B7: CHECK THE LH SEAT HEIGHT ADJUSTMENT MOTOR CIRCUIT FOR OPEN	
	1 Measure the resistance between the seat height motor electrical connector LS10 pin 1, (YG), and the seat control switch electrical connector LS16 pin 1, (YG).
	Is the resistance less than 5 ohms? **Yes** INSTALL a new seat control switch. TEST the system for normal operation. **No** REPAIR the circuit. TEST the system for normal operation.
B8: CHECK THE RH SEAT CONTROL SWITCH POWER SUPPLY	
	1 Disconnect the seat control switch electrical connector RS16.
	2 Measure the voltage between the seat control switch electrical connector RS16 pin 2, (OY), and ground.
	Is the voltage greater than 10 volts? **Yes** GO to B9. . **No** REPAIR the circuit. TEST the system for normal operation.
B9: CHECK THE RH SEAT CONTROL SWITCH GROUND CIRCUIT	

	1 Measure the resistance between the seat control switch electrical connector RS16 pin 3, (B), and ground and between RS16 pin 6, (B), and ground.
	Are the resistances less than 5 ohms? **Yes** GO to B10. . **No** REPAIR the circuit. TEST the system for normal operation.
B10: CHECK THE RH SEAT HEIGHT ADJUSTMENT MOTOR CIRCUITS	
	1 Disconnect the seat height motor electrical connector RS10.
	2 Operate the seat control switch to the UP position.
	3 Measure the voltage between the seat height motor electrical connector RS10 pin 1, (WG), and RS10 pin 2, (YG).
	Is the voltage greater than 10 volts? **Yes** INSTALL a new front seat height motor. TEST the system for normal operation. **No** GO to B11. .
B11: CHECK THE RH SEAT HEIGHT ADJUSTMENT MOTOR CIRCUIT	
	1 Operate the seat control switch to the UP position.
	2 Measure the voltage between the seat height motor electrical connector RS10 pin 1, (WG), and ground.
	Is the voltage greater than 10 volts? **Yes** GO to B12. . **No** GO to B13. .
B12: CHECK THE RH SEAT HEIGHT ADJUSTMENT MOTOR CIRCUIT FOR OPEN	
	1 Disconnect the seat control switch electrical connector RS16.
	2 Measure the resistance between the seat height motor electrical connector RS10 pin 2, (YG), and the seat control switch electrical connector RS16 pin 7, (YG).
	Is the resistance less than 5 ohms? **Yes** INSTALL a new seat control switch. TEST the system for normal operation. **No** REPAIR the circuit. TEST the system for normal operation.
B13: CHECK THE RH SEAT HEIGHT ADJUSTMENT MOTOR CIRCUIT FOR OPEN	
	1 Measure the resistance between the seat height motor electrical connector RS10 pin 1, (WG), and the seat control switch electrical connector RS16 pin 1, (WG).
	Is the resistance less than 5 ohms? **Yes** INSTALL a new seat control switch. TEST the system for normal operation. **No** REPAIR the circuit. TEST the system for normal operation.

PINPOINT TEST C : THE POWER SEAT DOES NOT MOVE HORIZONTALLY	
TEST CONDITIONS	**DETAILS/RESULTS/ACTIONS**
C1: CHECK THE LH FRONT SEAT TRACK MOTOR OPERATION	
	1 Operate the LH seat control switch to the REARWARD track position.
	Is the LH seat track inoperative? **Yes** GO to C2. . **No** GO to C6. .
C2: CHECK THE LH FRONT SEAT TRACK MOTOR CIRCUIT	
	1 Disconnect the seat track motor electrical connector LS4.
	2 Operate the seat control switch to the REARWARD track position.
	3 Measure the voltage between the seat track motor electrical connector LS4 pin 2, (WG), and LS4 pin 1, (YG).
	Is the voltage greater than 10 volts? **Yes** INSTALL a new front seat track motor. For additional information, refer to Motor—Front Seat Track. **No** GO to C3. .
C3: CHECK THE LH FRONT SEAT TRACK MOTOR CIRCUIT	
	1 Operate the seat control switch to the REARWARD track position.
	2 Measure the voltage between the seat track motor electrical connector LS4 pin 2, (WG), and ground.
	Is the voltage greater than 10 volts? **Yes** GO to C4. . **No** GO to C5. .
C4: CHECK THE LH FRONT SEAT TRACK MOTOR CIRCUIT FOR OPEN	
	1 Disconnect the seat control switch electrical connector LS1.
	2 Measure the resistance between the seat track motor electrical connector LS4 pin 1, (YG), and the seat control switch electrical connector LS1 pin 3, (YG).
	Is the resistance less than 5 ohms? **Yes** INSTALL a new seat control switch. For additional information, refer to Seat Control Switch. **No** REPAIR the circuit. TEST the system for normal operation.
C5: CHECK THE LH FRONT SEAT TRACK MOTOR CIRCUIT FOR OPEN	
	1 Disconnect the seat control switch electrical connector LS1.
	2 Measure the resistance between the seat track motor electrical connector LS4 pin 2, (WG), and the seat control switch electrical connector LS1 pin 11, (WG).
	Is the resistance less than 5 ohms? **Yes** INSTALL a new seat control switch. For additional information, refer to Seat Control Switch. **No** REPAIR the circuit. TEST the system for normal operation.

C6: CHECK THE RH FRONT SEAT TRACK MOTOR CIRCUIT	
	1 Disconnect the seat track motor electrical connector RS4.
	2 Operate the seat control switch to the REARWARD track position.
	3 Measure the voltage between the seat track motor electrical connector RS4 pin 2, (YG), and RS4 pin 1, (WG).
	Is the voltage greater than 10 volts? **Yes** INSTALL a new front seat track motor. For additional information, refer to Motor—Front Seat Track. **No** GO to C7. .
C7: CHECK THE RH FRONT SEAT TRACK MOTOR CIRCUIT	
	1 Operate the seat control switch to the REARWARD track position.
	2 Measure the voltage between the seat track motor electrical connector RS4 pin 2, (YG), and ground.
	Is the voltage greater than 10 volts? **Yes** GO to C8. . **No** GO to C9. .
C8: CHECK THE RH FRONT SEAT TRACK MOTOR CIRCUIT FOR OPEN	
	1 Disconnect the seat control switch electrical connector RS1.
	2 Measure the resistance between the seat track motor electrical connector RS4 pin 1, (WG), and the seat control electrical connector switch RS1 pin 3, (WG).
	Is the resistance less than 5 ohms? **Yes** INSTALL a new seat control switch. For additional information, refer to Seat Control Switch. **No** REPAIR the circuit. TEST the system for normal operation.
C9: CHECK THE RH FRONT SEAT TRACK MOTOR CIRCUIT FOR OPEN	
	1 Disconnect the seat control switch electrical connector RS1.
	2 Measure the resistance between the seat track motor electrical connector RS4 pin 2, (YG), and the seat control switch electrical connector RS1 pin 11, (YG).
	Is the resistance less than 5 ohms? **Yes** INSTALL a new seat control switch. For additional information, refer to Seat Control Switch. **No** REPAIR the circuit. TEST the system for normal operation.

PINPOINT TEST D : THE POWER SEAT DOES NOT MOVE VERTICALLY - HIGH SPECIFICATION SEAT	
TEST CONDITIONS	**DETAILS/RESULTS/ACTIONS**
D1: CHECK THE LH FRONT SEAT CUSHION HEIGHT ADJUSTMENT MOTORS FOR CORRECT OPERATION	
	1 Operate the LH seat control switch to the seat cushion front/rear height adjustment position.
	Is the LH seat cushion height adjustment inoperative? **Yes** GO to D2. . **No** GO to D11. .
D2: CHECK THE LH FRONT SEAT CUSHION FRONT HEIGHT ADJUSTMENT MOTOR OPERATION	
	1 Operate the LH seat control switch to the seat cushion front height adjustment position.
	Is the LH seat cushion front height adjustment inoperative? **Yes** GO to D3. . **No** GO to D7. .
D3: CHECK THE LH FRONT SEAT CUSHION FRONT HEIGHT ADJUSTMENT MOTOR CIRCUITS	
	1 Disconnect the seat cushion front height adjustment motor electrical connector LS5.
	2 Operate the seat control switch to the FRONT HEIGHT adjustment UP position.
	3 Measure the voltage between the seat cushion front height adjustment motor electrical connector LS5 pin 1, (YB), and LS5 pin 2, (WB).
	Is the voltage greater than 10 volts? **Yes** INSTALL a new seat cushion front height adjustment motor. For additional information, refer to Motor—Front Seat Cushion Front Height Adjustment. **No** GO to D4. .
D4: CHECK THE LH FRONT SEAT CUSHION FRONT HEIGHT ADJUSTMENT MOTOR CIRCUIT	
	1 Operate the seat control switch to the FRONT HEIGHT adjustment UP position.
	2 Measure the voltage between the seat cushion front height adjustment motor electrical connector LS5 pin 1, (YB), and ground.
	Is the voltage greater than 10 volts? **Yes** GO to D5. . **No** GO to D6. .
D5: CHECK THE LH FRONT SEAT CUSHION FRONT HEIGHT ADJUSTMENT MOTOR CIRCUIT FOR OPEN	
	1 Disconnect the seat control switch electrical connector LS1.
	2 Measure the resistance between the seat cushion front height adjustment motor electrical connector LS5 pin 2, (WB), and the seat control switch electrical connector LS1 pin 5, (WB).
	Is the resistance less than 5 ohms? **Yes** INSTALL a new seat control switch. For additional information, refer to Seat Control Switch. **No** REPAIR the circuit. TEST the system for normal operation.
D6: CHECK THE LH FRONT SEAT CUSHION FRONT HEIGHT ADJUSTMENT MOTOR CIRCUIT FOR OPEN	
	1 Disconnect the seat control switch electrical connector LS1.
	2 Measure the resistance between the seat cushion front height adjustment motor electrical connector LS5 pin 1, (YB), and the seat control switch electrical connector LS1 pin 4, (YB).

	Is the resistance less than 5 ohms? **Yes** INSTALL a new seat control switch. For additional information, refer to Seat Control Switch. **No** REPAIR the circuit. TEST the system for normal operation.
D7: CHECK THE LH FRONT SEAT CUSHION REAR HEIGHT ADJUSTMENT MOTOR CIRCUITS	
	1 Disconnect the seat cushion rear height adjustment motor electrical connector LS2.
	2 Operate the seat control switch to the REAR HEIGHT adjustment UP position.
	3 Measure the voltage between the seat cushion rear height adjustment motor electrical connector LS2 pin 1, (YU), and LS2 pin 2, (WR).
	Is the voltage greater than 10 volts? **Yes** INSTALL a new seat cushion rear height adjustment motor. For additional information, refer to Motor—Front Seat Cushion Rear Height Adjustment. **No** GO to D8. .
D8: CHECK THE LH FRONT SEAT CUSHION REAR HEIGHT ADJUSTMENT MOTOR CIRCUIT	
	1 Operate the seat control switch to the REAR HEIGHT adjustment UP position.
	2 Measure the voltage between the seat cushion rear height adjustment motor electrical connector LS2 pin 1, (YU), and ground.
	Is the voltage greater than 10 volts? **Yes** GO to D9. . **No** GO to D10. .
D9: CHECK THE LH FRONT SEAT CUSHION REAR HEIGHT ADJUSTMENT MOTOR CIRCUIT FOR OPEN	
	1 Disconnect the seat control switch electrical connector LS1.
	2 Measure the resistance between the seat cushion rear height adjustment motor electrical connector LS5 pin 2, (WR), and the seat control switch electrical connector LS1 pin 8, (WR).
	Is the resistance less than 5 ohms? **Yes** INSTALL a new seat control switch. For additional information, refer to Seat Control Switch. **No** REPAIR the circuit. TEST the system for normal operation.
D10: CHECK THE LH FRONT SEAT CUSHION REAR HEIGHT ADJUSTMENT MOTOR CIRCUIT FOR OPEN	
	1 Disconnect the seat control switch electrical connector LS1.
	2 Measure the resistance between the seat cushion rear height adjustment motor electrical connector LS2 pin 1, (YU), and the seat control switch electrical connector LS1 pin 9, (YU).
	Is the resistance less than 5 ohms? **Yes** INSTALL a new seat control switch. For additional information, refer to Seat Control Switch. **No** REPAIR the circuit. TEST the system for normal operation.
D11: CHECK THE RH FRONT SEAT CUSHION FRONT HEIGHT ADJUSTMENT MOTOR OPERATION	
	1 Operate the RH seat control switch to the seat cushion front height adjustment position.
	Is the RH seat cushion front height adjustment inoperative? **Yes** GO to D12. . **No** GO to D16. .
D12: CHECK THE RH FRONT SEAT CUSHION FRONT HEIGHT ADJUSTMENT MOTOR CIRCUITS	
	1 Disconnect the seat cushion front height adjustment motor electrical connector RS5.
	2 Operate the seat control switch to the FRONT HEIGHT adjustment UP position.
	3 Measure the voltage between the seat cushion front height adjustment motor electrical connector RS5 pin 1, (WB), and RS5 pin 2, (YB).
	Is the voltage greater than 10 volts? **Yes** INSTALL a new seat cushion front height adjustment motor. For additional information, refer to Motor—Front Seat Cushion Front Height Adjustment. **No** GO to D13. .
D13: CHECK THE RH FRONT SEAT CUSHION FRONT HEIGHT ADJUSTMENT MOTOR CIRCUIT	
	1 Operate the seat control switch to the FRONT HEIGHT adjustment UP position.
	2 Measure the voltage between the seat cushion front height adjustment motor electrical connector RS5 pin 1, (WB), and ground.
	Is the voltage greater than 10 volts? **Yes** GO to D14. . **No** GO to D15. .
D14: CHECK THE RH FRONT SEAT CUSHION FRONT HEIGHT ADJUSTMENT MOTOR CIRCUIT FOR OPEN	
	1 Disconnect the seat control switch electrical connector RS1.
	2 Measure the resistance between the seat cushion front height adjustment motor electrical connector RS5 pin 2, (YB), and the seat control switch electrical connector RS1 pin 5, (YB).
	Is the resistance less than 5 ohms? **Yes** INSTALL a new seat control switch. For additional information, refer to Seat Control Switch. **No** REPAIR the circuit. TEST the system for normal operation.
D15: CHECK THE RH FRONT SEAT CUSHION FRONT HEIGHT ADJUSTMENT MOTOR CIRCUIT FOR OPEN	
	1 Disconnect the seat control switch electrical connector RS1.
	2 Measure the resistance between the seat cushion front height adjustment motor electrical connector RS5 pin 1, (WB), and the seat control switch electrical connector RS1 pin 4, (WB).
	Is the resistance less than 5 ohms? **Yes** INSTALL a new seat control switch. For additional information, refer to Seat Control Switch. **No**

	REPAIR the circuit. TEST the system for normal operation.
D16: CHECK THE RH FRONT SEAT CUSHION REAR HEIGHT ADJUSTMENT MOTOR CIRCUITS	
	1 Disconnect the seat cushion rear height adjustment motor electrical connector RS2.
	2 Operate the seat control switch to the REAR HEIGHT adjustment UP position.
	3 Measure the voltage between the seat cushion rear height adjustment motor electrical connector RS2 pin 1, (WR), and RS2 pin 2, (YU).
	Is the voltage greater than 10 volts? **Yes** INSTALL a new seat cushion rear height adjustment motor. For additional information, refer to Motor—Front Seat Cushion Rear Height Adjustment. **No** GO to D17. .
D17: CHECK THE RH FRONT SEAT CUSHION REAR HEIGHT ADJUSTMENT MOTOR CIRCUIT	
	1 Operate the seat control switch to the REAR HEIGHT adjustment UP position.
	2 Measure the voltage between the seat cushion rear height adjustment motor electrical connector RS2 pin 1, (WR), and ground.
	Is the voltage greater than 10 volts? **Yes** GO to D18. . **No** GO to D19. .
D18: CHECK THE RH FRONT SEAT CUSHION REAR HEIGHT ADJUSTMENT MOTOR CIRCUIT FOR OPEN	
	1 Disconnect the seat control switch electrical connector RS1.
	2 Measure the resistance between the seat cushion rear height adjustment motor electrical connector RS2 pin 2, (YU), and the seat control switch electrical connector RS1 pin 8, (YU).
	Is the resistance less than 5 ohms? **Yes** INSTALL a new seat control switch. For additional information, refer to Seat Control Switch. **No** REPAIR the circuit. TEST the system for normal operation.
D19: CHECK THE RH FRONT SEAT CUSHION REAR HEIGHT ADJUSTMENT MOTOR CIRCUIT FOR OPEN	
	1 Disconnect the seat control switch electrical connector RS1.
	2 Measure the resistance between the seat cushion rear height adjustment motor electrical connector RS2 pin 1, (WR), and the seat control switch electrical connector RS1 pin 9, (WR).
	Is the resistance less than 5 ohms? **Yes** INSTALL a new seat control switch. For additional information, refer to Seat Control Switch. **No** REPAIR the circuit. TEST the system for normal operation.

PINPOINT TEST E : THE POWER SEAT DOES NOT RECLINE - HIGH SPECIFICATION SEAT ONLY

TEST CONDITIONS	DETAILS/RESULTS/ACTIONS
E1: CHECK THE LH FRONT SEAT BACKREST MOTOR FOR CORRECT OPERATION	
	1 Operate the LH seat control switch to the REARWARD RECLINE position.
	Is the LH seat recline adjustment inoperative? **Yes** GO to E2. . **No** GO to E6. .
E2: CHECK THE LH FRONT SEAT BACKREST MOTOR CIRCUITS	
	1 Disconnect the seat backrest motor electrical connector LS6.
	2 Operate the seat control switch to the REARWARD RECLINE position.
	3 Measure the voltage between the seat backrest motor electrical connector LS6 pin 2, (WR), and LS6 pin 1, (YR).
	Is the voltage greater than 10 volts? **Yes** INSTALL a new seat backrest motor. For additional information, refer to Motor—Front Seat Backrest. **No** GO to E3. .
E3: CHECK THE LH FRONT SEAT BACKREST MOTOR CIRCUIT	
	1 Operate the seat control switch to the REARWARD RECLINE position.
	2 Measure the voltage between the seat backrest motor electrical connector LS6 pin 2, (WR), and ground.
	Is the voltage greater than 10 volts? **Yes** GO to E4. . **No** GO to E5. .
E4: CHECK THE LH FRONT SEAT BACKREST MOTOR CIRCUIT FOR OPEN	
	1 Disconnect the seat control switch electrical connector LS1.
	2 Measure the resistance between the seat backrest motor electrical connector LS6 pin 1, (YR), and the seat control switch electrical connector LS1 pin 7, (YR).
	Is the resistance less than 5 ohms? **Yes** INSTALL a new seat control switch. For additional information, refer to Seat Control Switch. **No** REPAIR the circuit. TEST the system for normal operation.
E5: CHECK THE LH FRONT SEAT BACKREST MOTOR CIRCUIT FOR OPEN	
	1 Disconnect the seat control switch electrical connector LS1.
	2 Measure the resistance between the seat backrest motor electrical connector LS6 pin 2, (WR), and the seat control switch electrical connector LS1 pin 12, (WR).
	Is the resistance less than 5 ohms? **Yes** INSTALL a new seat control switch. For additional information, refer to Seat Control Switch. **No** REPAIR the circuit. TEST the system for normal operation.
E6: CHECK THE RH FRONT SEAT BACKREST MOTOR CIRCUITS	

	1 Disconnect the seat backrest motor electrical connector RS6.
	2 Operate the seat control switch to the REARWARD RECLINE position.
	3 Measure the voltage between the seat backrest motor electrical connector RS6 pin 2, (YR), and RS6 pin 1, (WR).
	Is the voltage greater than 10 volts? **Yes** INSTALL a new seat backrest motor. For additional information, refer to Motor—Front Seat Backrest. **No** GO to E7. .
E7: CHECK THE RH FRONT SEAT BACKREST MOTOR CIRCUIT	
	1 Operate the seat control switch to the REARWARD RECLINE position.
	2 Measure the voltage between the seat backrest motor electrical connector RS6 pin 2, (YR), and ground.
	Is the voltage greater than 10 volts? **Yes** GO to E8. . **No** GO to E9. .
E8: CHECK THE RH FRONT SEAT BACKREST MOTOR CIRCUIT FOR OPEN	
	1 Disconnect the seat control switch electrical connector RS1.
	2 Measure the resistance between the seat backrest motor electrical connector RS6 pin 1, (WR), and the seat control switch electrical connector RS1 pin 7, (WR).
	Is the resistance less than 5 ohms? **Yes** INSTALL a new seat control switch. For additional information, refer to Seat Control Switch. **No** REPAIR the circuit. TEST the system for normal operation.
E9: CHECK THE RH FRONT SEAT BACKREST MOTOR CIRCUIT FOR OPEN	
	1 Disconnect the seat control switch electrical connector RS1.
	2 Measure the resistance between the seat backrest motor electrical connector RS6 pin 2, (YR), and the seat control switch electrical connector RS1 pin 12, (YR).
	Is the resistance less than 5 ohms? **Yes** INSTALL a new seat control switch. For additional information, refer to Seat Control Switch. **No** REPAIR the circuit. TEST the system for normal operation.

PINPOINT TEST F : THE POWER LUMBAR IS INOPERATIVE	
TEST CONDITIONS	**DETAILS/RESULTS/ACTIONS**
F1: CHECK THE LH FRONT SEAT LUMBAR ASSEMBLY OPERATION - HIGH SPECIFICATION SEAT ONLY	
	1 Operate the LH seat lumbar control switch to the INFLATE position.
	Is the LH seat lumbar adjustment inoperative? **Yes** GO to F2. . **No** GO to F10. .
F2: CHECK THE LH SEAT LUMBAR CONTROL SWITCH POWER SUPPLY	
	1 Disconnect the seat control switch electrical connector LS16.
	2 Measure the voltage between the seat control switch electrical connector LS16 pin 2, (OG), and ground.
	Is the voltage greater than 10 volts? **Yes** GO to F3. . **No** REPAIR the circuit. TEST the system for normal operation.
F3: CHECK THE LH SEAT LUMBAR CONTROL SWITCH GROUND CIRCUIT	
	1 Measure the resistance between the seat control switch electrical connector LS16 pin 3, (B), and ground and between LS16 pin 6, (B), and ground.
	Are the resistances less than 5 ohms? **Yes** GO to F4. . **No** REPAIR the circuit. TEST the system for normal operation.
F4: CHECK THE LH SEAT LUMBAR ASSEMBLY CIRCUITS	
	1 Disconnect the seat lumbar assembly electrical connector LS19.
	2 Operate the seat lumbar control switch to the INFLATE position.
	3 Measure the voltage between the seat lumbar motor electrical connector LS19 pin 1, (YG), and LS19 pin 2, (B).
	Is the voltage greater than 10 volts? **Yes** GO to F5. . **No** GO to F7. .
F5: CHECK THE LH SEAT LUMBAR ASSEMBLY DEFLATE CIRCUIT	
	1 Operate the seat lumbar control switch to the DEFLATE position.
	2 Measure the voltage between the seat lumbar assembly electrical connector LS19 pin 3, (WG), and ground.
	Is the voltage greater than 10 volts? **Yes** INSTALL a new lumbar assembly. For additional information, refer to Lumbar Assembly. **No** GO to F6. .
F6: CHECK THE LH SEAT LUMBAR ASSEMBLY DEFLATE CIRCUIT FOR OPEN	
	1 Disconnect the seat lumber control switch electrical connector LS16.
	2 Measure the resistance between the seat lumbar assembly electrical connector LS19 pin 3, (WG), and the seat lumbar control switch electrical connector LS16 pin 7, (WG).
	Is the resistance less than 5 ohms? **Yes** INSTALL a new seat lumbar control switch. TEST the system for normal operation. **No**

	REPAIR the circuit. TEST the system for normal operation.
F7: CHECK THE LH SEAT LUMBAR ASSEMBLY INFLATE CIRCUIT	
	1 Operate the seat lumbar control switch to the INFLATE position.
	2 Measure the voltage between the seat lumbar motor electrical connector LS19 pin 1, (YG), and ground.
	Is the voltage greater than 10 volts? **Yes** GO to F8. . **No** GO to F9. .
F8: CHECK THE LH SEAT LUMBAR ASSEMBLY GROUND CIRCUIT	
	1 Measure the resistance between the seat lumbar assembly electrical connector LS19 pin 2, (B), and ground.
	Is the resistance less than 5 ohms? **Yes** INSTALL a new seat lumbar control switch. TEST the system for normal operation. **No** REPAIR the circuit. TEST the system for normal operation.
F9: CHECK THE LH SEAT LUMBAR ASSEMBLY INFLATE CIRCUIT	
	1 Disconnect the seat lumber control switch electrical connector LS16.
	2 Measure the resistance between the seat lumbar assembly electrical connector LS19 pin 1, (YG), and the seat lumbar control switch electrical connector LS16 pin 1, (YG).
	Is the resistance less than 5 ohms? **Yes** INSTALL a new seat lumbar control switch. TEST the system for normal operation. **No** REPAIR the circuit. TEST the system for normal operation.
F10: CHECK THE RH SEAT LUMBAR CONTROL SWITCH POWER SUPPLY	
	1 Disconnect the seat control switch electrical connector RS16.
	2 Measure the voltage between the seat control switch electrical connector RS16 pin 2, (OY), and ground.
	Is the voltage greater than 10 volts? **Yes** GO to F11. . **No** REPAIR the circuit. TEST the system for normal operation.
F11: CHECK THE RH SEAT LUMBAR CONTROL SWITCH GROUND CIRCUIT	
	1 Measure the resistance between the seat control switch electrical connector RS16 pin 3, (B), and ground and between RS16 pin 6, (B), and ground.
	Are the resistances less than 5 ohms? **Yes** GO to F12. . **No** REPAIR the circuit. TEST the system for normal operation.
F12: CHECK THE RH SEAT LUMBAR ASSEMBLY CIRCUITS	
	1 Disconnect the seat lumbar assembly electrical connector RS19.
	2 Operate the seat lumbar control switch to the INFLATE position.
	3 Measure the voltage between the seat lumbar motor electrical connector RS19 pin 1, (WG), and RS19 pin 2, (B).
	Is the voltage greater than 10 volts? **Yes** GO to F13. . **No** GO to F15. .
F13: CHECK THE RH SEAT LUMBAR ASSEMBLY DEFLATE CIRCUIT	
	1 Operate the seat lumbar control switch to the DEFLATE position.
	2 Measure the voltage between the seat lumbar assembly electrical connector RS19 pin 3, (YG), and ground.
	Is the voltage greater than 10 volts? **Yes** INSTALL a new lumbar assembly. For additional information, refer to Lumbar Assembly. **No** GO to F14. .
F14: CHECK THE RH SEAT LUMBAR ASSEMBLY DEFLATE CIRCUIT FOR OPEN	
	1 Disconnect the seat lumber control switch electrical connector RS16.
	2 Measure the resistance between the seat lumbar assembly electrical connector RS19 pin 3, (YG), and the seat lumbar control switch electrical connector RS16 pin 7, (YG).
	Is the resistance less than 5 ohms? **Yes** INSTALL a new seat lumbar control switch. TEST the system for normal operation. **No** REPAIR the circuit. TEST the system for normal operation.
F15: CHECK THE RH SEAT LUMBAR ASSEMBLY INFLATE CIRCUIT	
	1 Operate the seat lumbar control switch to the INFLATE position.
	2 Measure the voltage between the seat lumbar motor electrical connector RS19 pin 1, (WG), and ground.
	Is the voltage greater than 10 volts? **Yes** GO to F16. . **No** GO to F17. .
F16: CHECK THE RH SEAT LUMBAR ASSEMBLY GROUND CIRCUIT	
	1 Measure the resistance between the seat lumbar assembly electrical connector RS19 pin 2, (B), and ground.
	Is the resistance less than 5 ohms? **Yes** INSTALL a new seat lumbar control switch. TEST the system for normal operation. **No** REPAIR the circuit. TEST the system for normal operation.
F17: CHECK THE RH SEAT LUMBAR ASSEMBLY INFLATE CIRCUIT	
	1 Disconnect the seat lumber control switch electrical connector RS16.
	2 Measure the resistance between the seat lumbar assembly electrical connector RS19 pin 1, (WG), and the seat lumbar control switch electrical connector RS16 pin 1, (WG).

	Is the resistance less than 5 ohms? **Yes** INSTALL a new seat lumbar control switch. TEST the system for normal operation. **No** REPAIR the circuit. TEST the system for normal operation.

Seating - Front Seat

Removal and Installation

Removal

• WARNINGS:

An RCM module only requires replacement if the system has incurred five separate deployments. At no time change an RCM for less than five separate deployments.

Always wear safety glasses when repairing an air bag supplemental restraint system (SRS) vehicle and when handling an air bag module. Failure to follow this instruction may result in personal injury.

Carry a live air bag module with the air bag and trim cover pointed away from your body. This will reduce the risk of injury in the event of an accidental deployment. Failure to follow this instruction may result in personal injury.

Do not set a live air bag module down with the trim cover face down. Failure to follow this instruction may result in personal injury.

After deployment, the air bag surface can contain deposits of sodium hydroxide, a product of the gas generant combustion that is irritating to the skin. Wash your hands with soap and water afterwards. Failure to follow this instruction may result in personal injury.

Never probe the connectors on the air bag module. Doing so may result in air bag deployment. Failure to follow this instruction may result in personal injury.

Air bag modules with discolored or damaged trim covers must be replaced.

Vehicle sensor orientation is critical for correct system operation. If a vehicle equipped with an air bag supplemental restraint system (SRS) is involved in a collision, inspect the sensor mounting bracket and wiring pigtail for deformation. If damaged, install a new sensor whether or not the air bag is deployed. If the body work is damaged this will have to be addressed.

To avoid accidental deployment and possible personal injury, the backup power supply must be depleted before repairing or replacing any air bag supplemental restraint system (SRS) components. To deplete the backup power supply energy, disconnect the battery ground cable and wait one minute. Failure to follow this instruction may result in personal injury.

• NOTE: Repair is made by replacement only. If a part is replaced and the new part does not correct the condition, install the original part and carry out the diagnostic procedure again.

• NOTE: When installing a new air bag module, a prepaid return postcard is provided with the replacement air bag module. The serial number for the new part and the vehicle identification number (VIN) must be recorded and sent to Jaguar Cars Ltd.

1. Inspect the front seat to check if a front seat stabilization spring is installed. If a front seat stabilization spring is installed. REFER to SERVICE ACTION S948 before carrying out any work on the seat.
2. Move the seat fully rearwards.
3. Remove the seat front retaining bolts.

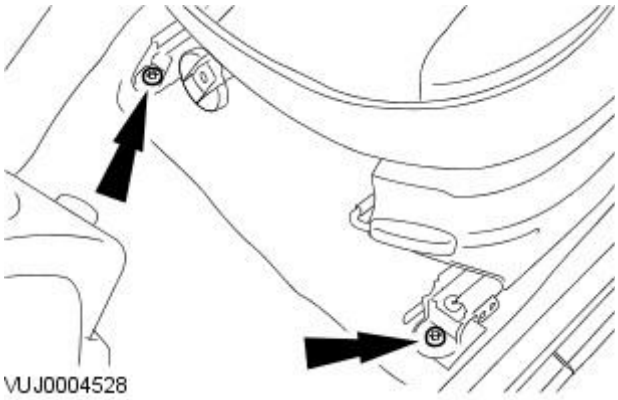

4. Move the seat fully forwards.

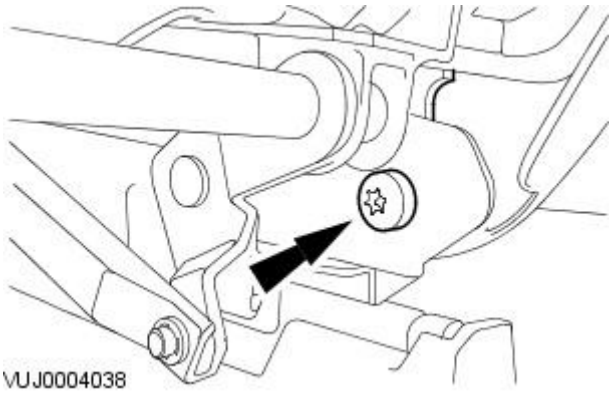

5. Detach the safety belt lower anchor from the underside of the seat.

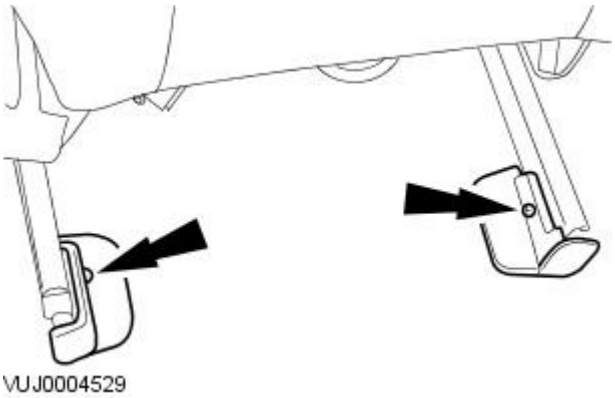

6. Remove the seat rear retaining bolt covers.

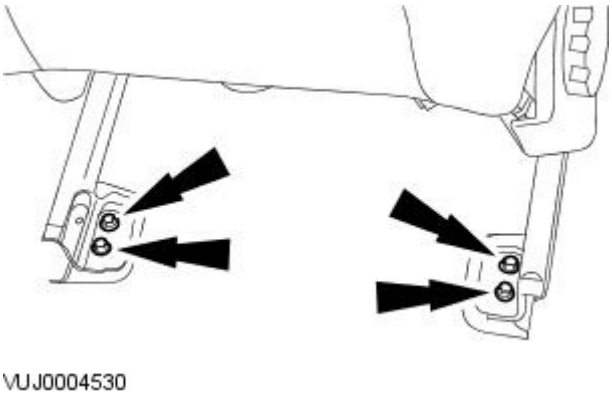

7. Remove the seat.

- Remove the retaining bolts.

8. Disconnect the battery ground cable. For additional information, refer to For additional information, refer to: Battery Disconnect and Connect (414-01 Battery, Mounting and Cables, General Procedures).
.

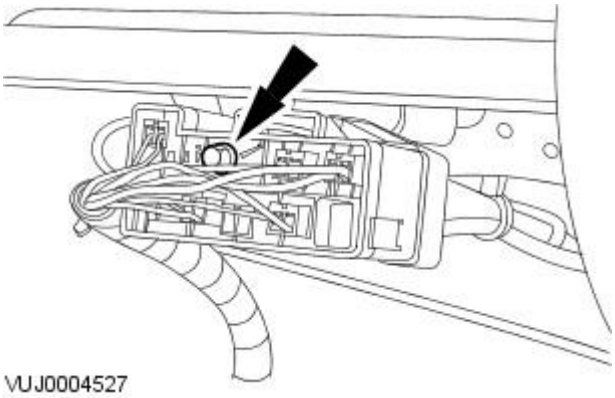

9. Disconnect the electrical connector.

Installation

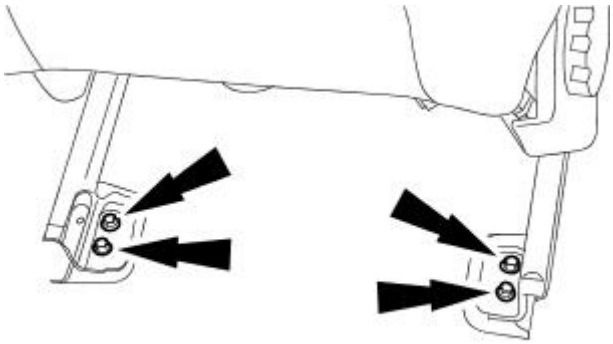

VUJ0004530

1. To install, reverse the removal procedure.

- Tighten to 20 Nm.

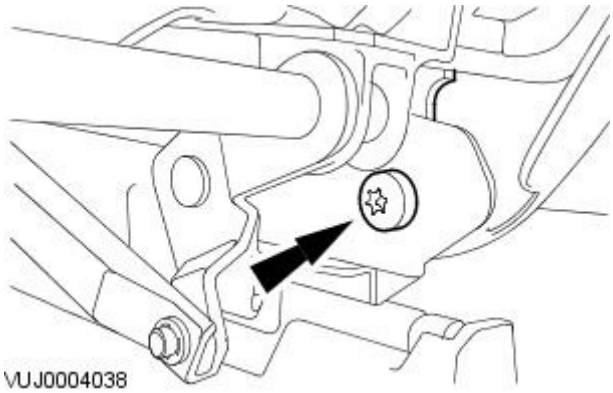

VUJ0004038

2. Tighten to 55 Nm.

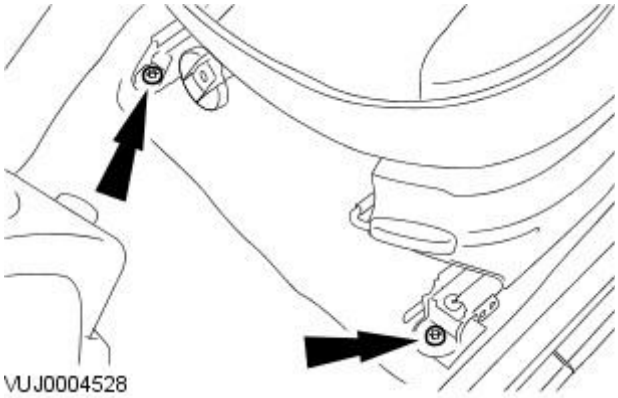

VUJ0004528

3. Tighten to 20 Nm.

Seating - Front Seat Backrest

Removal and Installation

Removal

1. Remove the front seat.
   For additional information, refer to: Front Seat (501-10 Seating, Removal and Installation).
2. Detach the outer side trim panel.

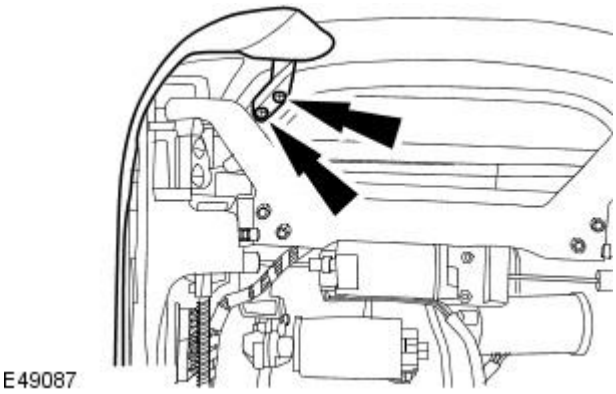

E49087

3. Detach the outer side trim panel.

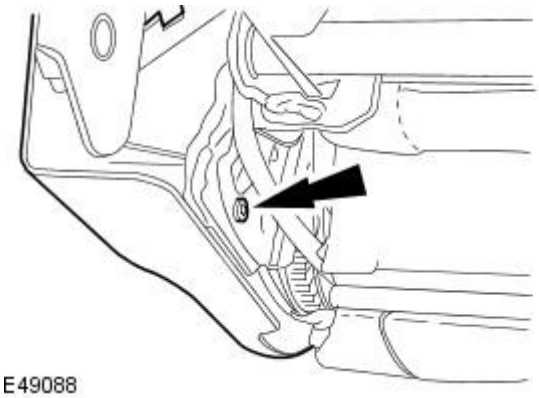

E49088

4. Detach the outer side trim panel.

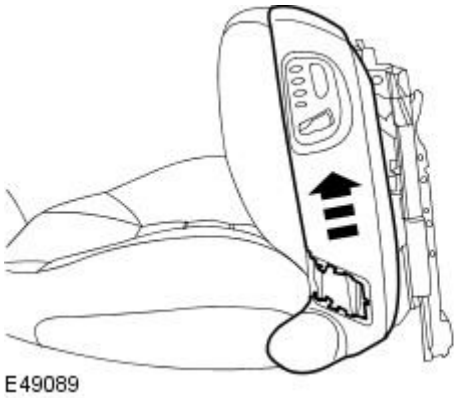

E49089

5. Remove the outer side trim panel.
   - Disconnect the electrical connectors.

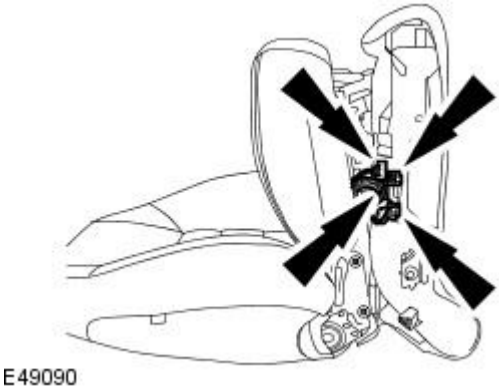

E49090

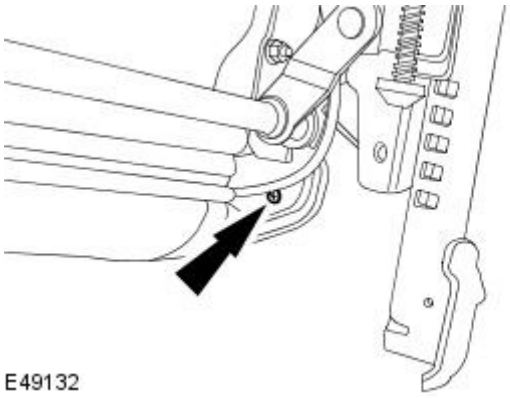

6. Detach the inner side trim panel.

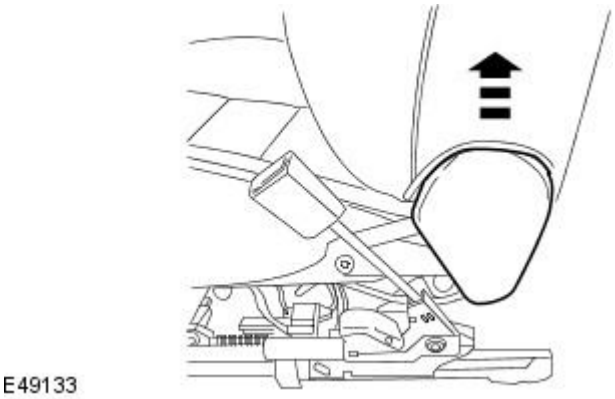

7. Remove the inner side trim panel.

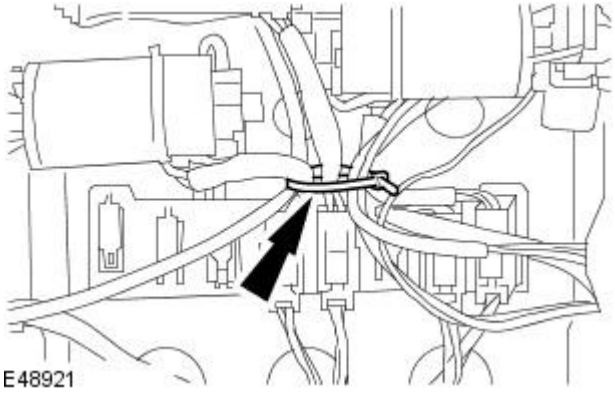

8. Remove and discard the cable tie.

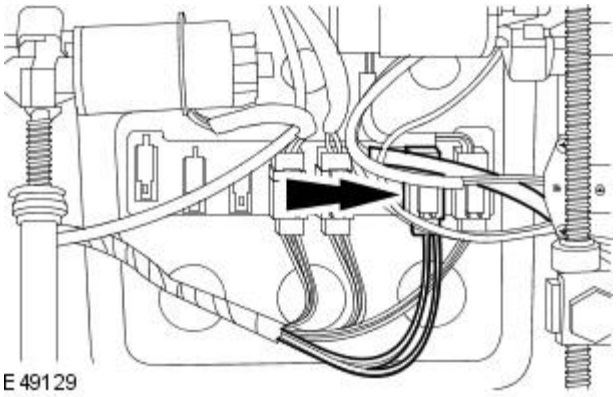

9. Detach the recliner motor electrical connector.

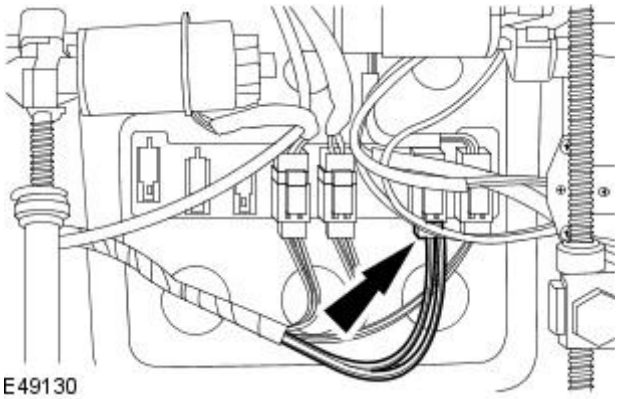

10. Disconnect the recliner motor electrical connector.

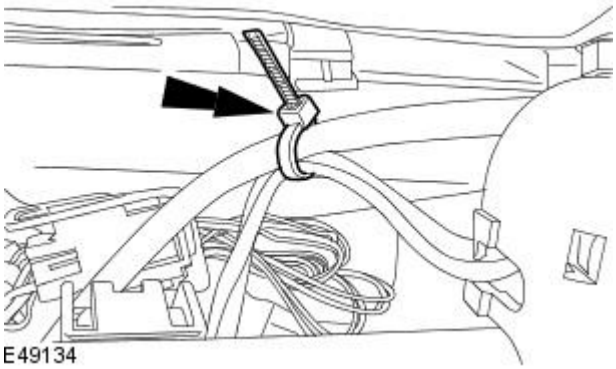

11. Detach the recliner motor wiring harness.

- Remove and discard the retaining clip.

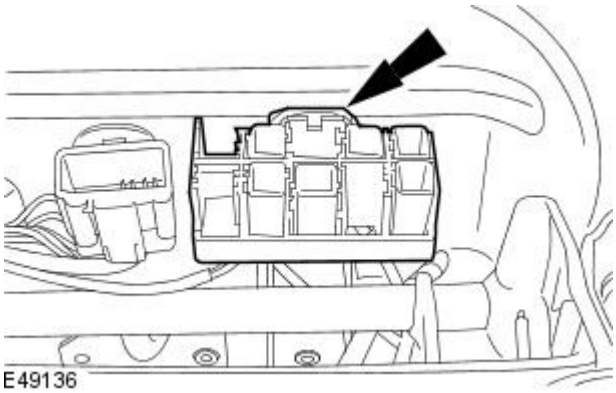

12. Detach the seat harness electrical connector.

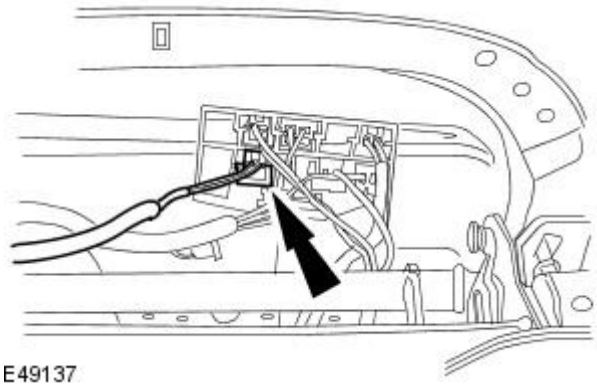

13. Disconnect the side air bag module electrical connector.

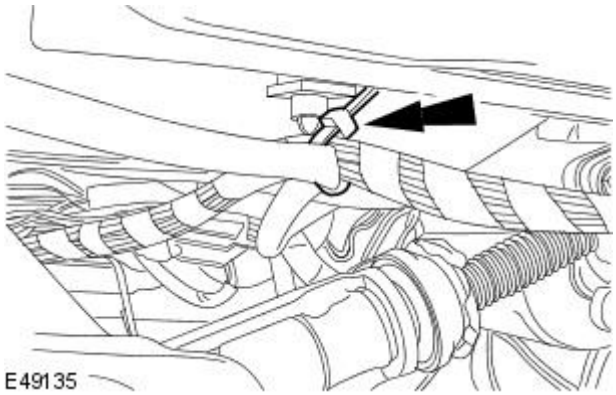

14. Detach the side airbag module wiring harness.

- Remove and discard the retaining clip.

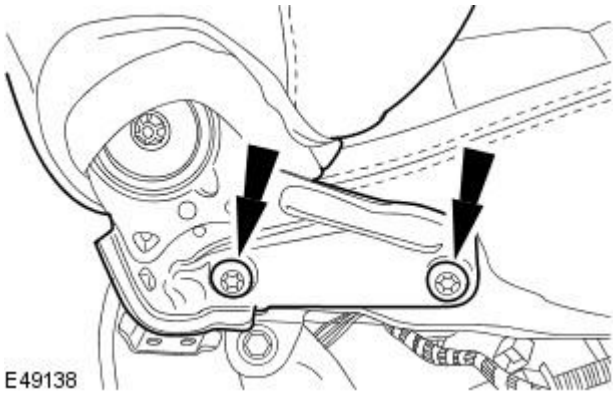

15. Remove the front seat backrest retaining bolts.

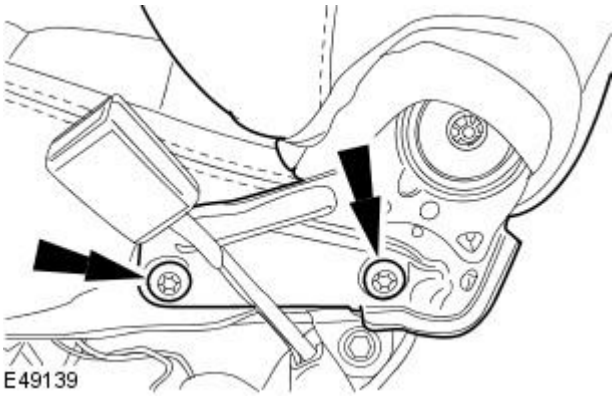

16. Remove the front seat backrest.

Installation

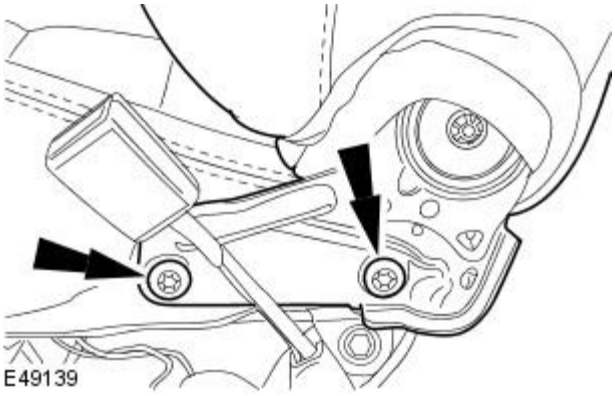

1. To install, reverse the removal procedure

- Tighten to 25 Nm.

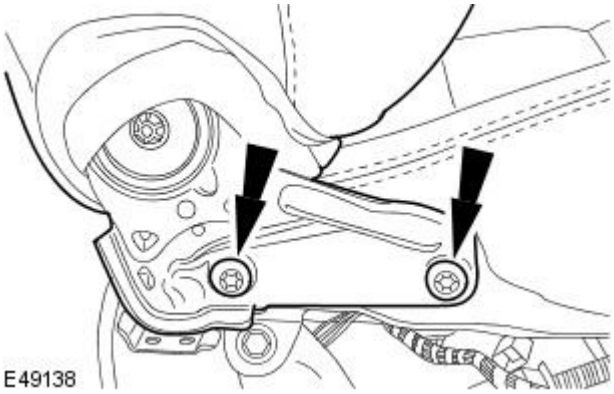

2. Tighten to 25 Nm.

Seating - Front Seat Cushion

Removal and Installation

Removal

1. CAUTION: The front seat cushion is calibrated to the occupant classification sensor, and can only be replaced as part of the service kit.

For additional information, refer to Section 501-20A Safety Belt System / 501-20B Supplemental Restraint System.

Seating - Front Seat Front Height Adjustment Motor

Removal and Installation

Removal

1. Remove the front seat.
   For additional information, refer to: Front Seat (501-10 Seating, Removal and Installation).
2. Cut and discard the cable tie.

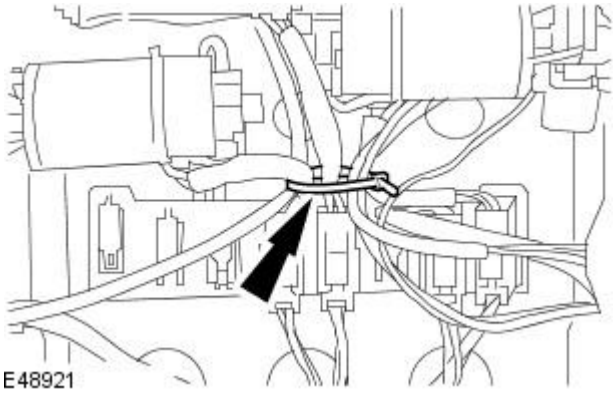

3. Detach the front height adjustment motor electrical connector.

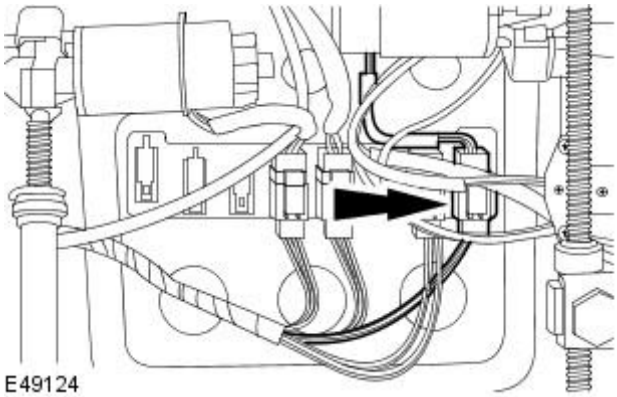

4. Disconnect the front height adjustment motor electrical connector.

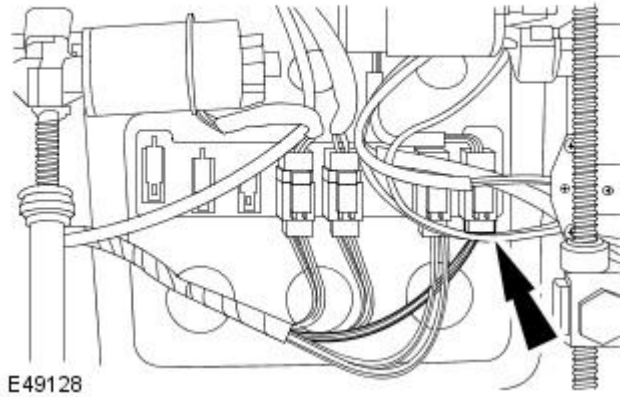

5. Remove the front height adjustment motor roll pin.

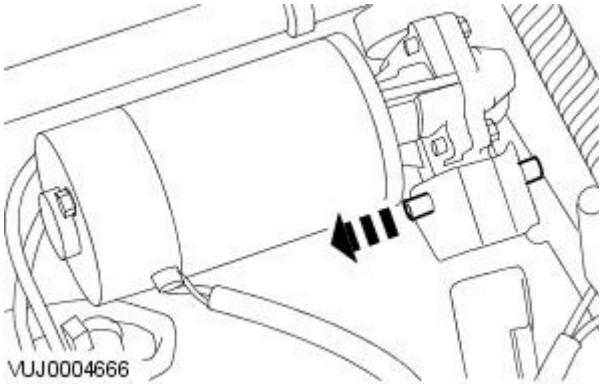

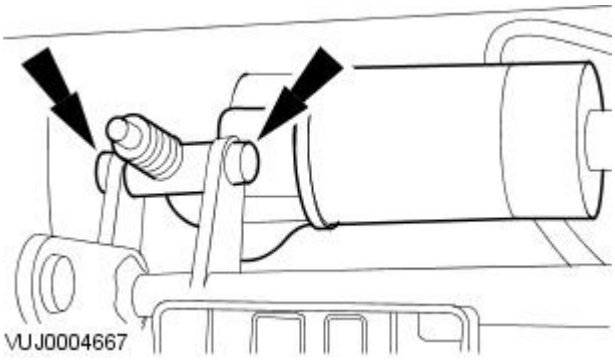

6. Remove the front seat front height adjustment motor.

- Remove the retaining bolts.

Installation

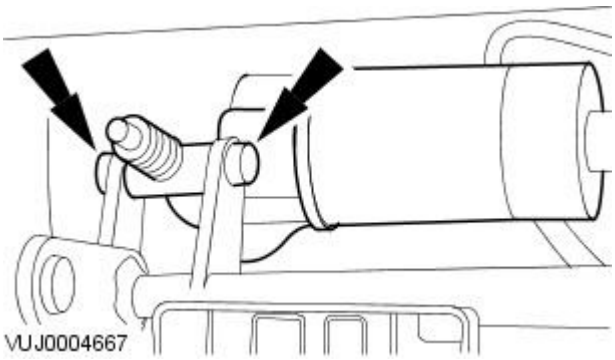

1. To install, reverse the removal procedure.

- Tighten to 10 Nm.

Seating - Front Seat Rear Height Adjustment Motor

Removal and Installation

Removal

1. Remove the front seat.
   For additional information, refer to: Front Seat (501-10 Seating, Removal and Installation).
2. Remove and discard the cable tie.

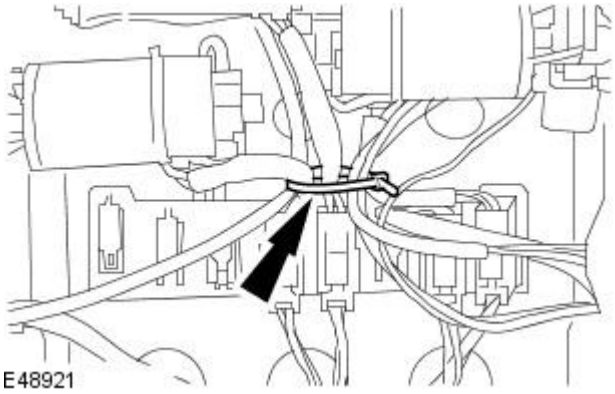

3. Detach the wiring harness.

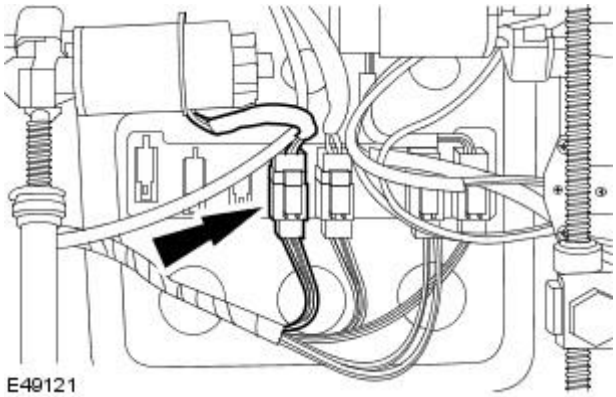

4. Disconnect the front seat rear height adjustment motor electrical connector.

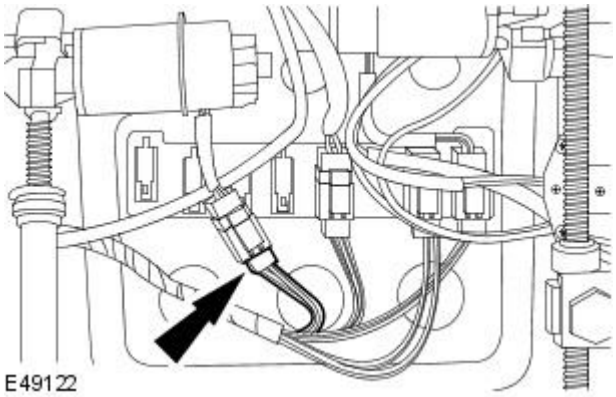

5. Remove the front seat rear height adjustment motor roll pin.

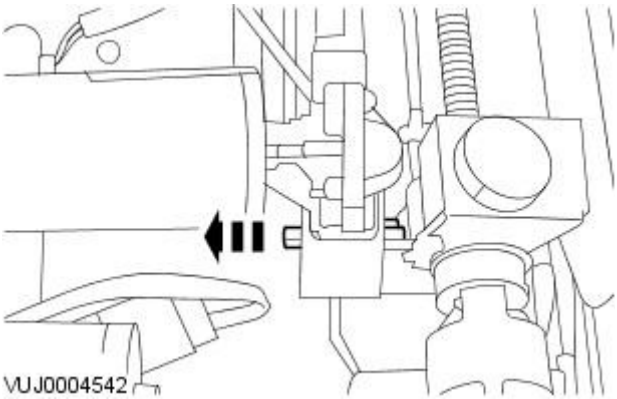

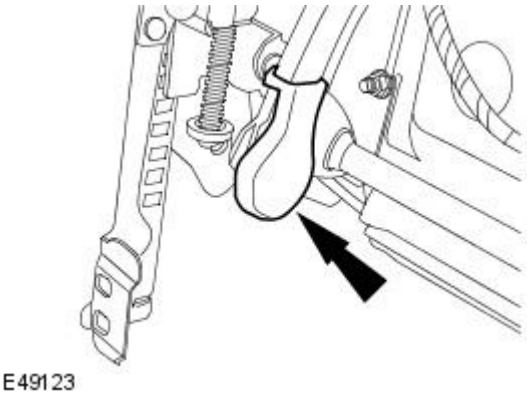

6. Remove the trim finisher.

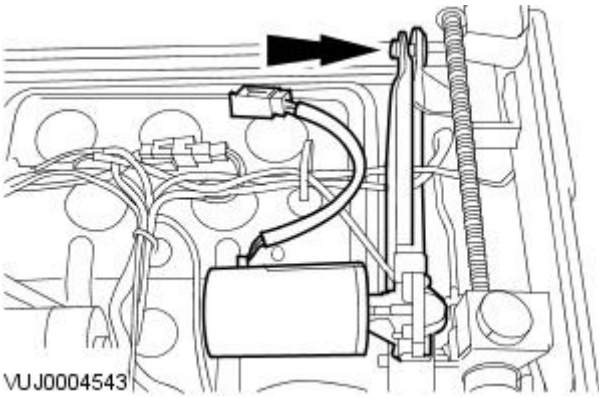

7. Remove the front seat rear height adjustment motor.

- Remove the retaining bolt.

Installation

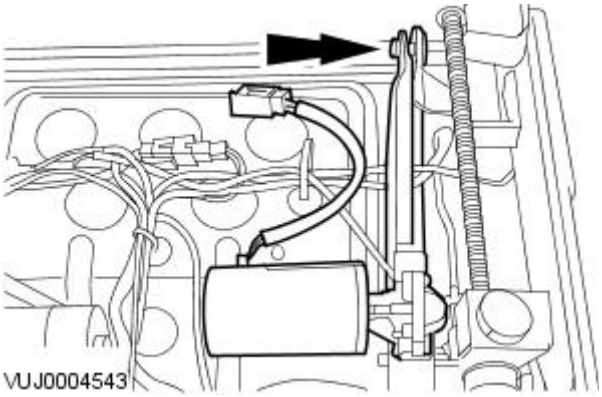

1. To install, reverse the removal procedure.

- Tighten to 10 Nm.

Seating - Front Seat Recliner Motor

Removal and Installation

Removal

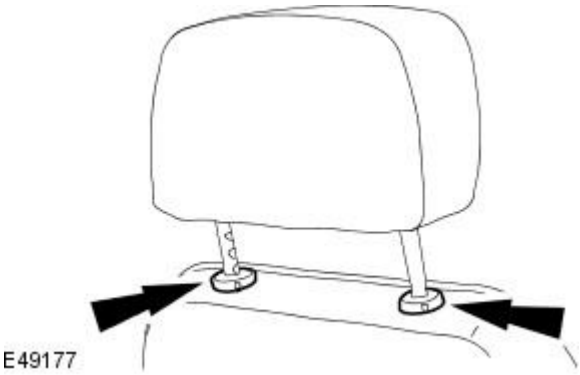

1. Remove the front seat backrest.
   For additional information, refer to: Front Seat Backrest (501-10 Seating, Removal and Installation).
2. Remove the front seat head restraint.
   - Press the retaining tangs.

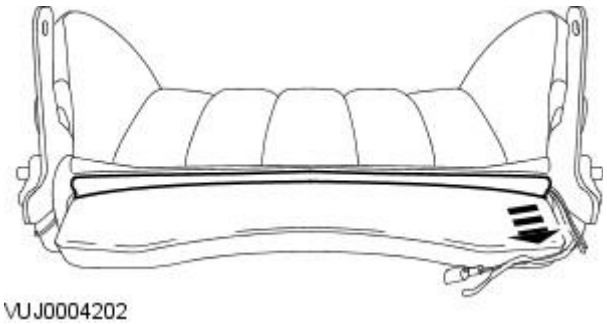

3. Detach the front seat backrest cover.
   - Detach the retaining strip.

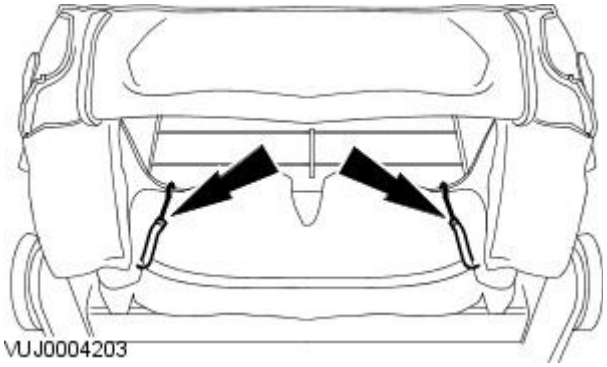

4. Detach the front seat backrest cover tension cords from the front seat backrest.

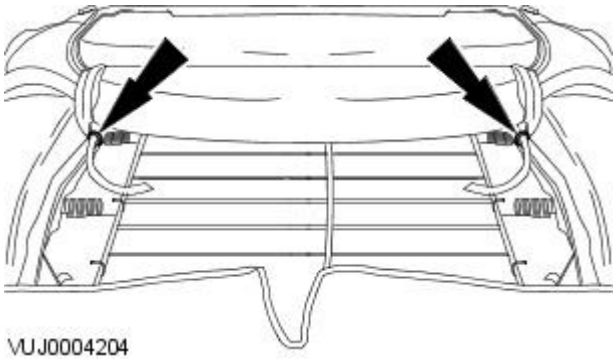

5. Detach the front seat backrest cover.
   - Remove and discard the hog rings.

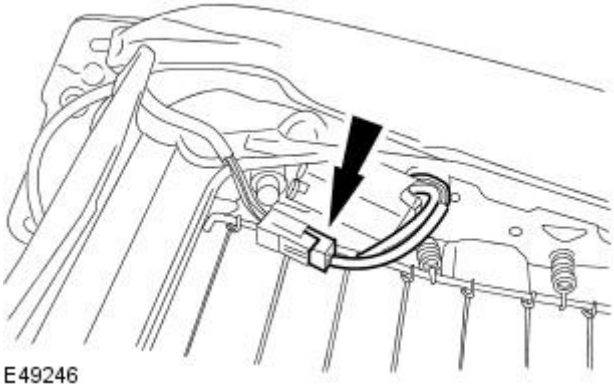

6. Disconnect the front seat backrest motor electrical connector.

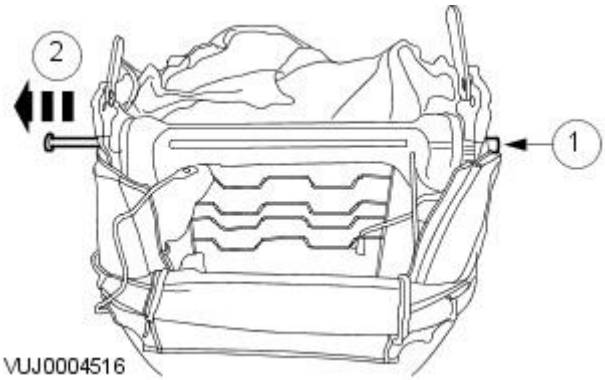

7. Detach the front seat backrest recliner bar from the motor.

1. Remove the recliner bar retaining clip.
2. Detach the front seat backrest recliner bar from the motor.

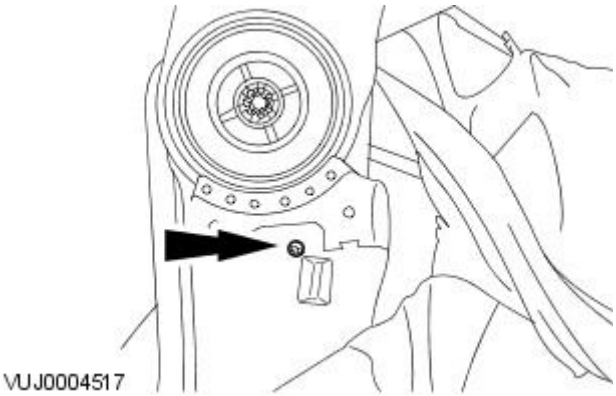

8. Remove the front seat recliner motor.

- Remove the retaining screw.

Installation

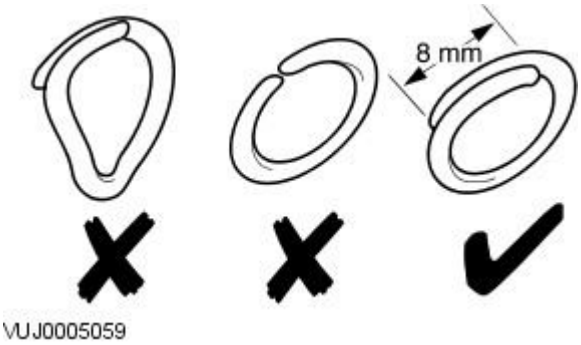

1. NOTE: Install new hog rings. Use hog ring pliers to close the hog rings. Do not use any other tool. The hog rings must be closed to overlap as illustrated.

• NOTE: Install a new front seat recliner bar retaining clip.

To assemble, reverse the disassembly procedure.

Seating - Front Seat Track Motor

Removal and Installation

Removal

1. Remove the front seat.
   For additional information, refer to: Front Seat (501-10 Seating, Removal and Installation).
2. Remove and discard the cable tie.

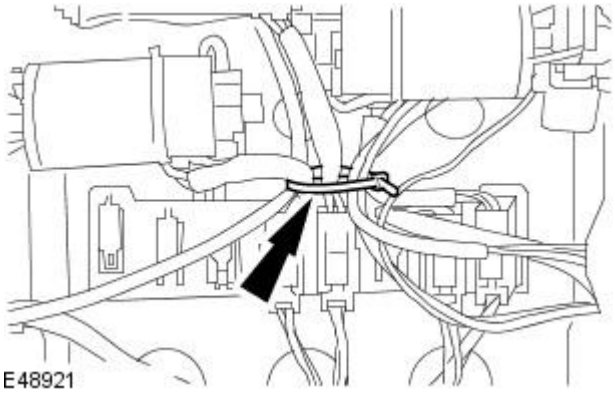

3. Detach the front seat track motor electrical connector.

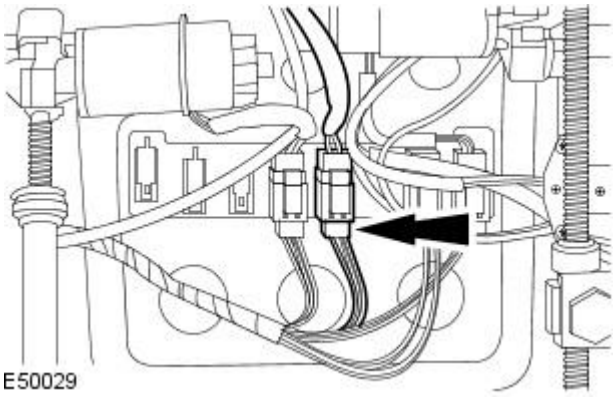

4. Disconnect the front seat track motor electrical connector.

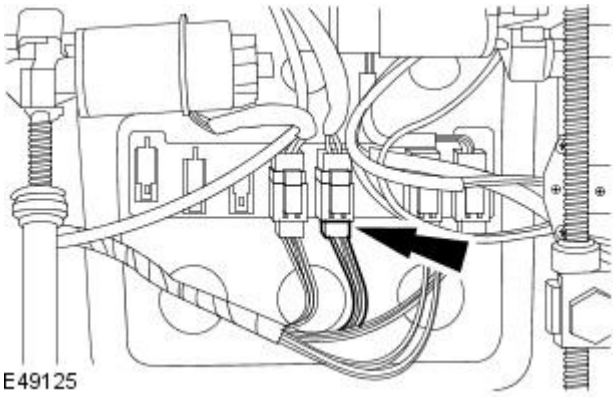

5. Remove the front seat track motor.

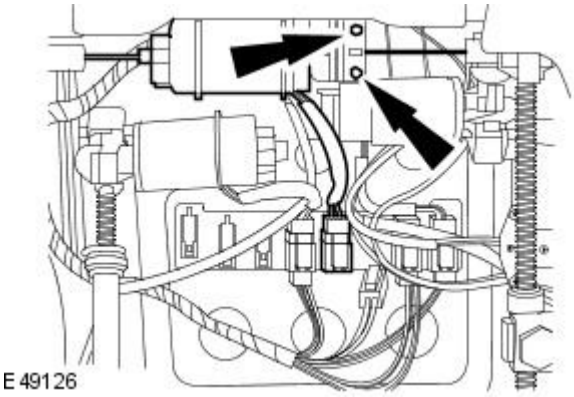

Installation

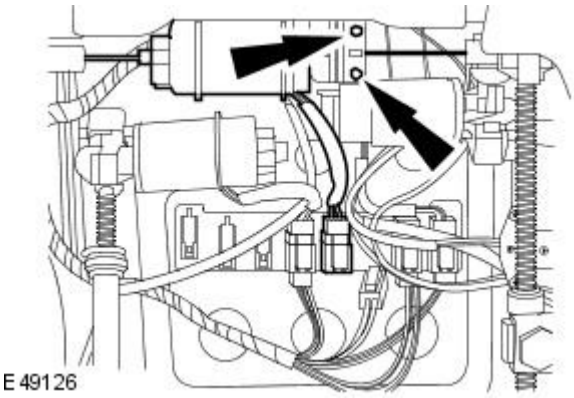

1. NOTE: Make sure the front seat track motor control rods are correctly located.

To install, reverse the removal procedure.

- Tighten to 10 Nm.

Seating - Lumbar Assembly

Removal and Installation

Removal

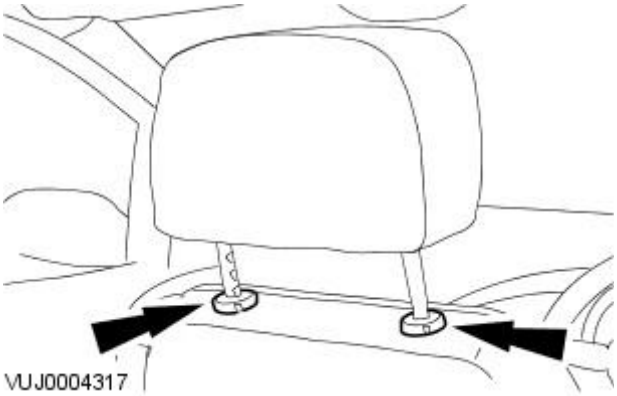

1. Remove the front seat backrest. For additional information, refer to Front Seat Backrest.
2. Remove the head restraint.
   - Press the tangs.

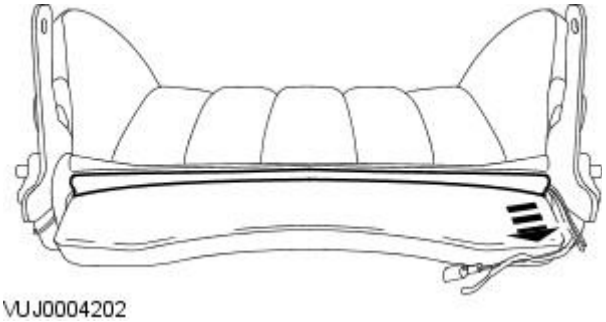

3. Detach the backrest cover.
   - Detach the retaining strip.

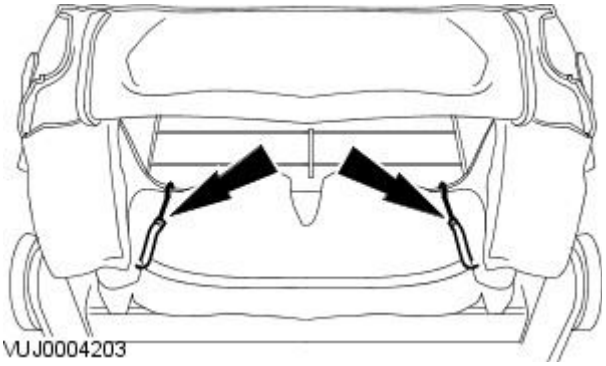

4. Detach the backrest cover tension cords from the backrest.

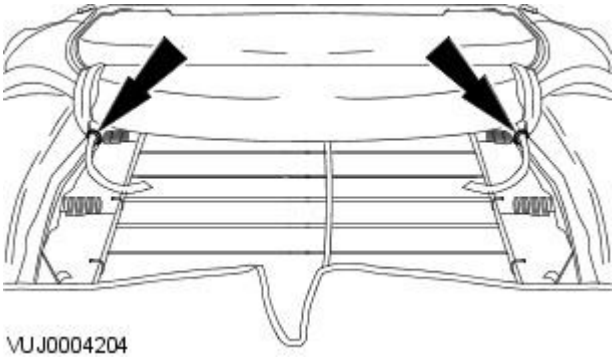

5. Detach the backrest cover.
   - Cut the hog rings.

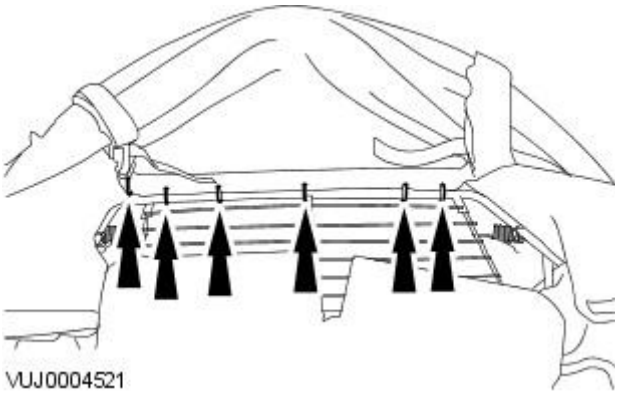

6. Detach the backrest cover.

- Cut the hog rings.

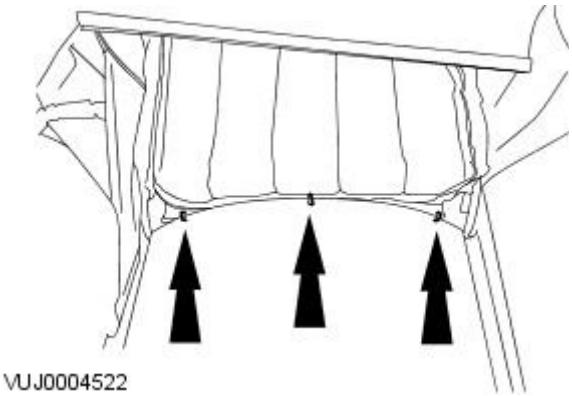

7. Detach the backrest cover.

- Cut the hog rings.

8. Roll the backrest cover up the backrest.

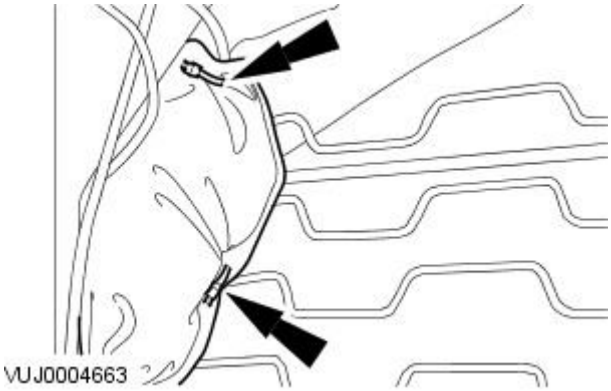

9. Detach the lumbar motor from the seat backrest frame.

- Cut the cable ties.

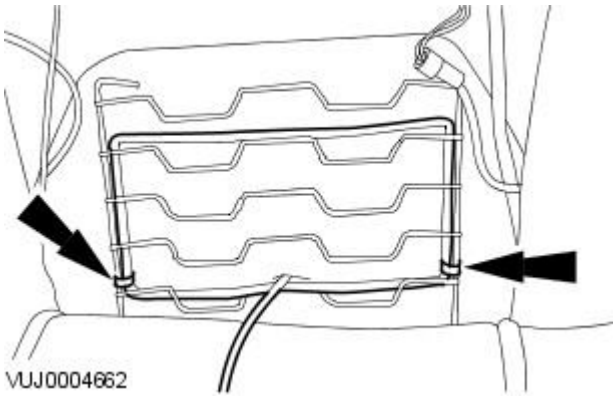

10. Remove the lumbar assembly.

- Cut the cable ties.

Installation

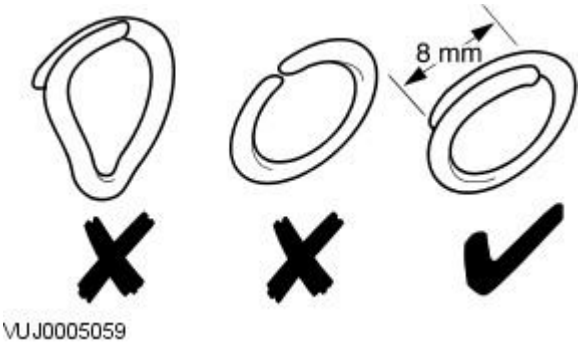

1. NOTE: Install new cable ties and hog rings. Use hog ring pliers to close the hog rings. Do not use any other tool. The hog rings must be closed to overlap as illustrated.

To install, reverse the removal procedure.

Seating - Rear Seat Backrest4-Door

Removal and Installation

Removal

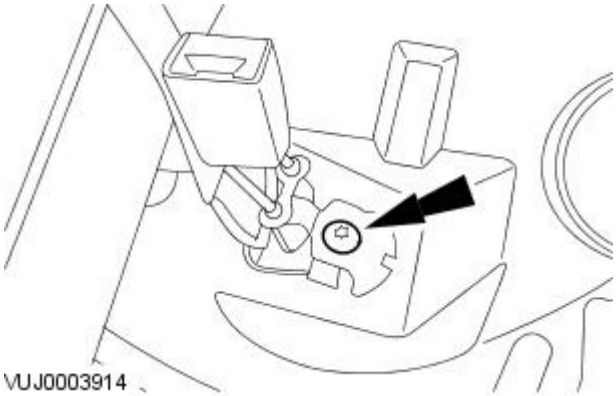

1. Remove the rear seat cushion. For additional information, refer to Rear Seat Cushion.
2. Remove the rear center safety belt and buckle.
   - Remove the retaining bolt.

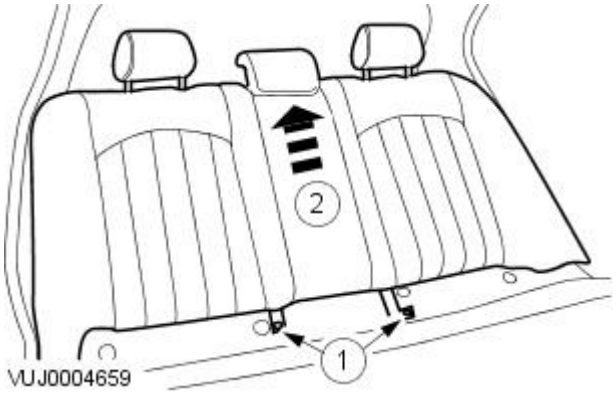

3. Remove the rear seat backrest.
   1. Remove the retaining bolts.
   2. Remove the rear seat backrest.

Installation

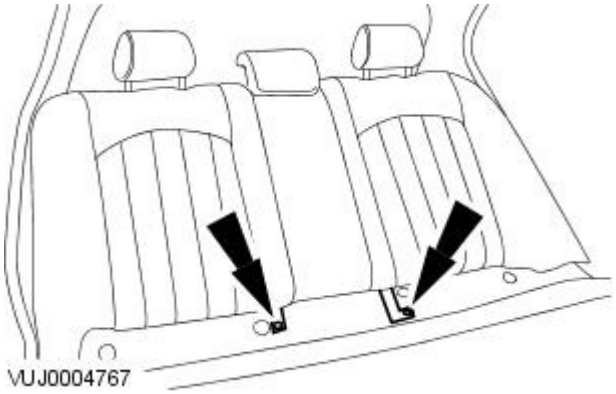

1. To install, reverse the removal procedure.
   - Tighten to 55 Nm.

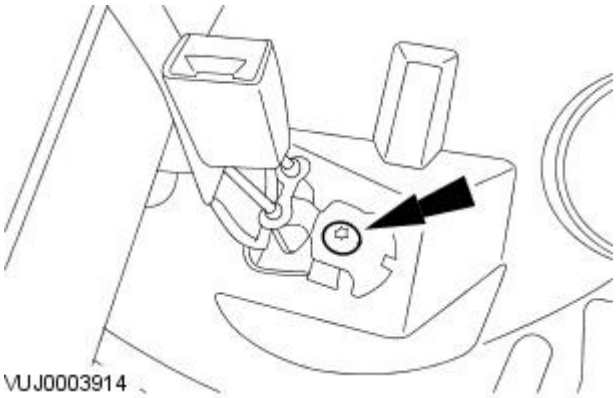

2. Tighten to 55 Nm.

Seating - Rear Seat Backrest4-Door, Vehicles With: 70 / 30 Split Seat

Removal and Installation

Removal

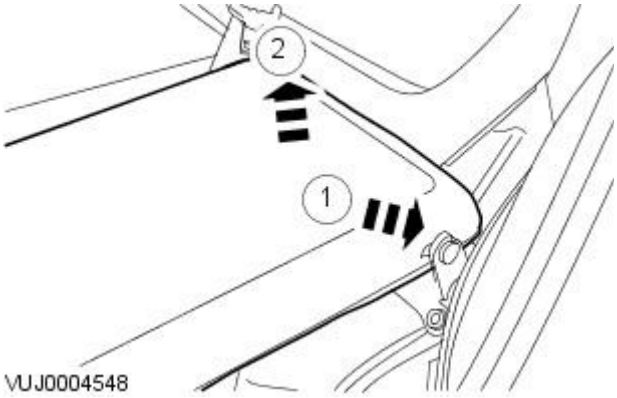

1. Fold down the rear seat backrest.

2. Remove the rear seat backrest.

1. Detach the rear seat backrest.
2. Remove the rear seat backrest.

Installation

1. To install, reverse the removal procedure.

Seating - Rear Seat BackrestWagon, Vehicles With: 70 / 30 Split Seat

Removal and Installation

Removal

1. Remove the rear seat cushion.
   For additional information, refer to: Rear Seat Cushion (501-10 Seating, Removal and Installation).
2. Fold down the rear seat backrest.
3. Detach the rear seat backrest center hinge plate.

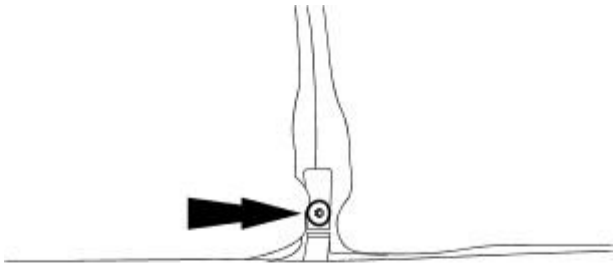

E48745

4. Raise the rear seat backrest.
5. Remove the rear seat backrest centre hinge plate.

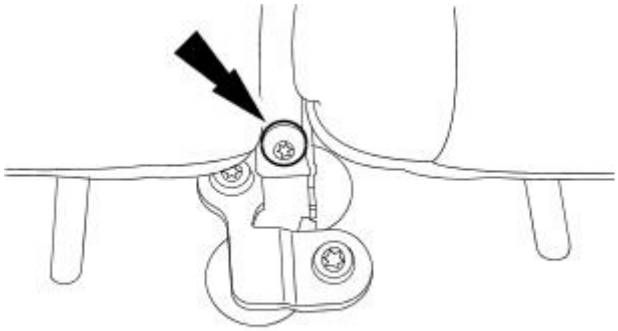

E48746

6. Detach the rear centre safety belt buckle.

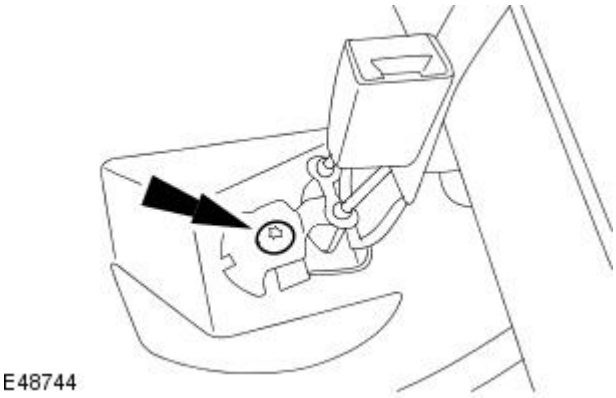

E48744

7. NOTE: Left-hand shown, right-hand similar.

   Remove the rear seat backrest.

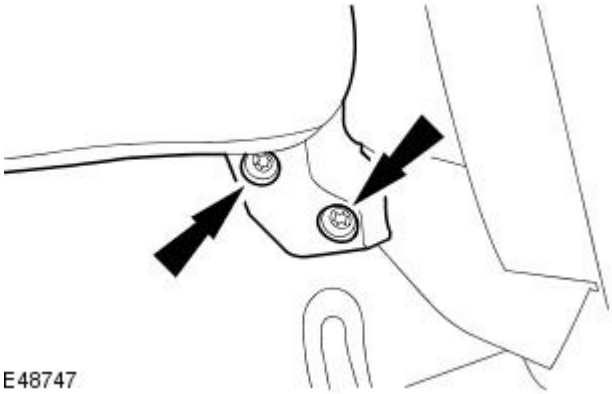

E48747

Installation

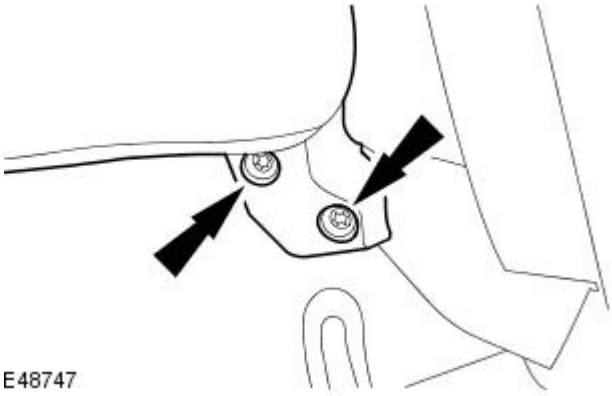

E48747

1. NOTE: Left-hand shown, right-hand similar.

To install, reverse the removal procedure.

- Tighten to 55 Nm.

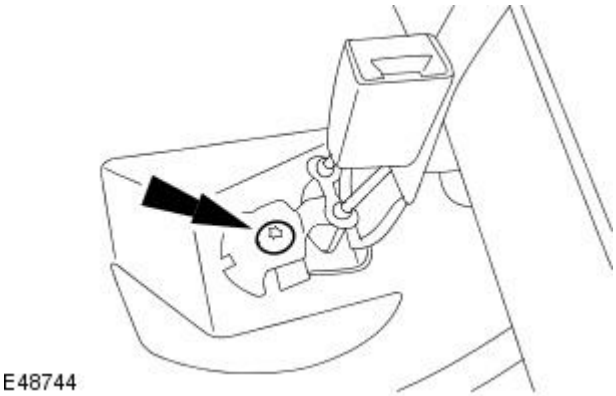

E48744

2. Tighten to 55 Nm.

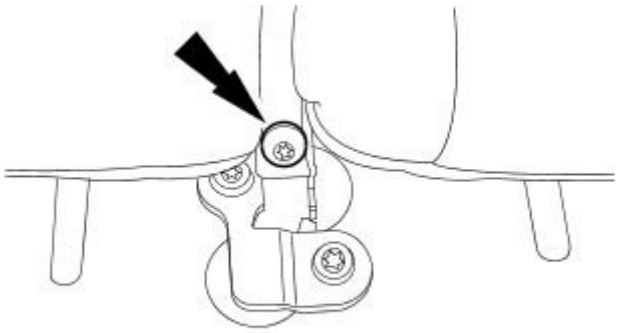

E48746

3. Tighten to 23 Nm.

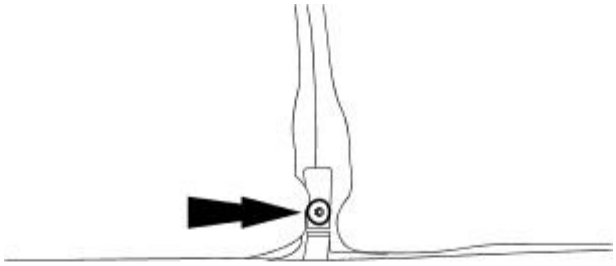

E48745

4. Tighten to 23 Nm.

Seating - Rear Seat Backrest LatchWagon

Removal and Installation

Removal

1. Disassemble the rear seat backrest.
   For additional information, refer to: Rear Seat Backrest - Wagon, Vehicles With: 70/30 Split Seat (501-10 Seating, Disassembly and Assembly).
2. Detach the centre safety belt release cable.

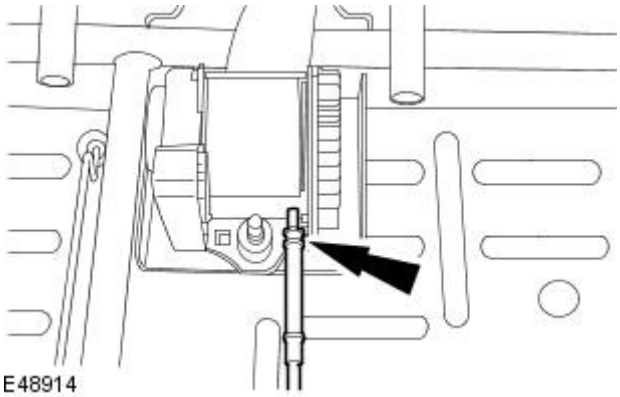

3. Remove the rear seat backrest latch.

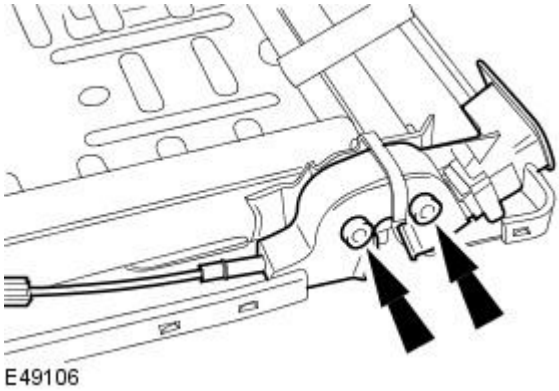

Installation

1. To install, reverse the removal procedure.
   - Tighten to 32 Nm.

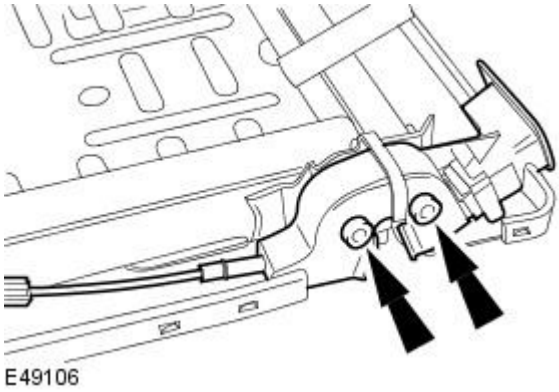

Seating - Rear Seat Bolster4-Door

Removal and Installation

Removal

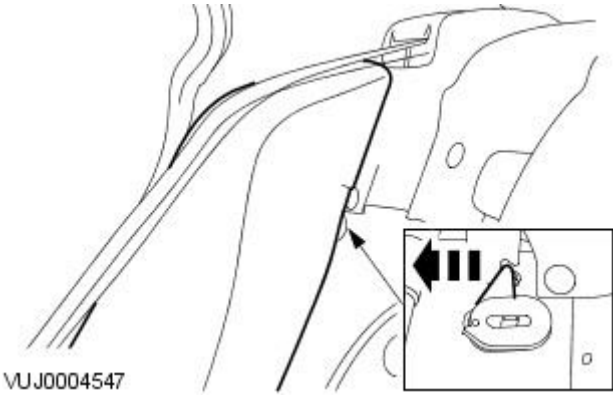

1. Fold down the rear seat backrest.
2. Detach the rear seat backrest bolster.
   - Press the tang.

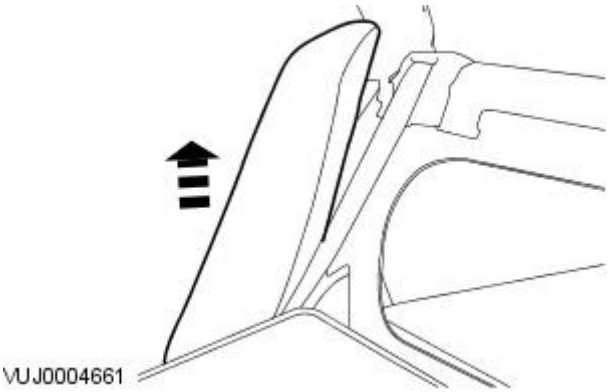

3. Remove the rear seat backrest bolster.

Installation

1. To install, reverse the removal procedure.

Seating - Rear Seat BolsterWagon

Removal and Installation

Removal

1. Remove the loadspace cover.

2. Fold down the rear seat backrest.

3. Detach the loadspace cover retaining bracket finisher trim.

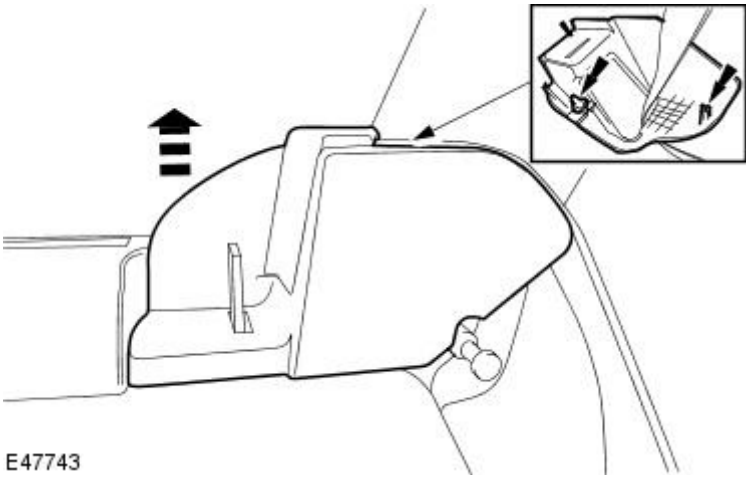

4. Detach the rear seat bolster.

1. Press the seat bolster upper retaining latch.
2. Detach the rear seat bolster.

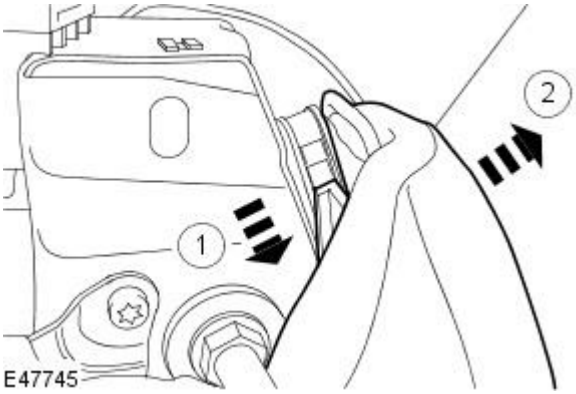

5. Remove the rear seat bolster.

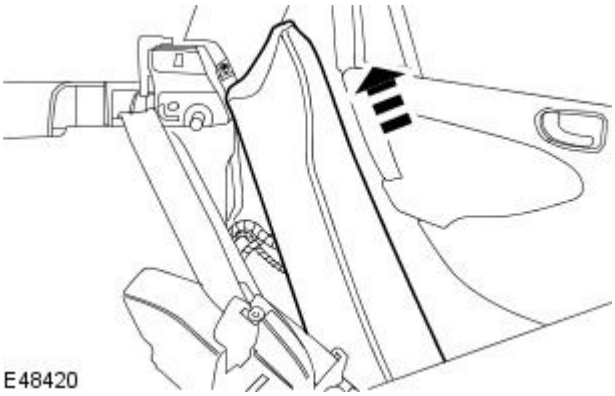

Installation

1. To install, reverse the removal procedure.

Seating - Rear Seat Cushion

Removal and Installation

Removal

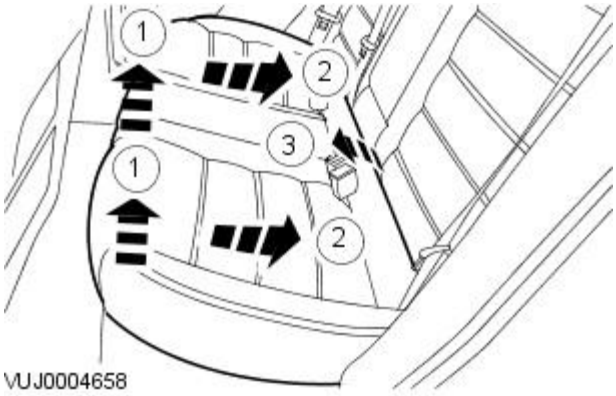

1. NOTE: Remove and discard old retaining clips.

Remove the rear seat cushion.

1. Detach the rear seat cushion front retaining clips.
2. Slide the rear seat cushion out of the retaining hooks.
3. Remove the rear seat cushion.

Installation

1. NOTE: Make sure the safety belt buckles are located through the cushion.

- NOTE: Install new seat cushion front retaining clips

To install, reverse the removal procedure.

Seating - Seat Base

Removal and Installation

Removal

1. Remove the front seat backrest.
   For additional information, refer to: Front Seat Backrest (501-10 Seating, Removal and Installation).
2. Detach the electrical connectors.

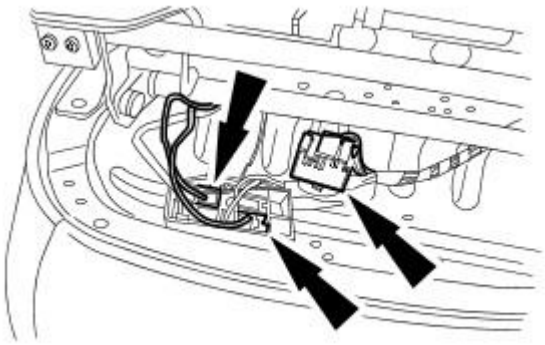

E49180

3. Remove the safety belt buckle and pretensioner.

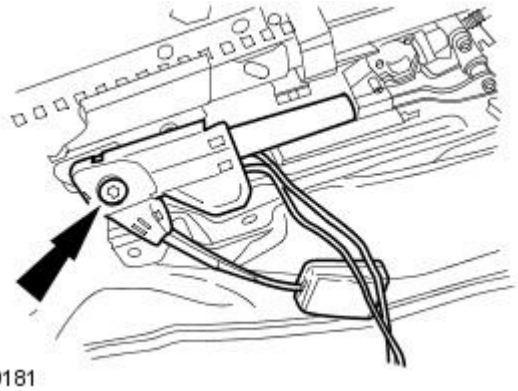

E49181

4. Detach the seat motor electrical connectors.

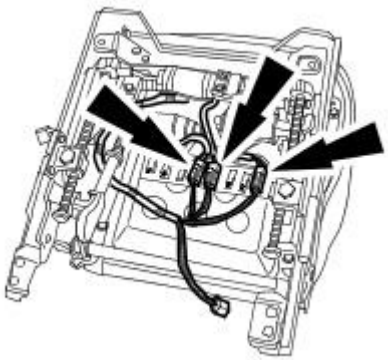

E49183

5. Remove the seat base.

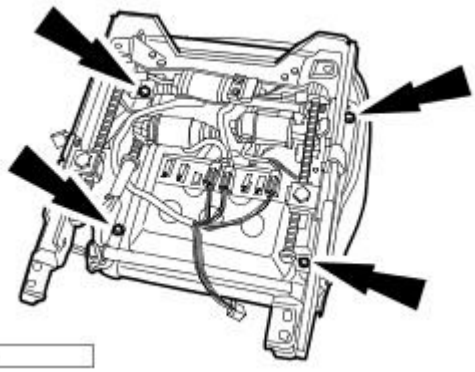

E49182

Installation

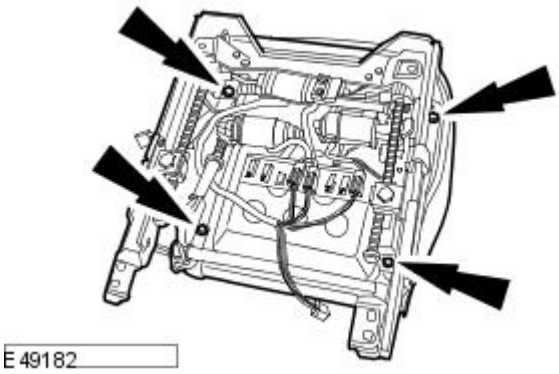

1. To install, reverse the removal procedure.

- Tighten to 15 Nm.

Seating - Seat Control Switch

Removal and Installation

Removal

1. Remove the front seat.
   For additional information, refer to: Front Seat (501-10 Seating, Removal and Installation).
2. Detach the outer side trim panel.

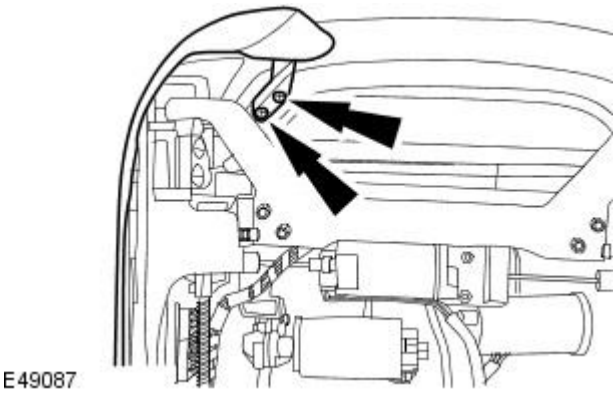

E49087

3. Detach the outer side trim panel.

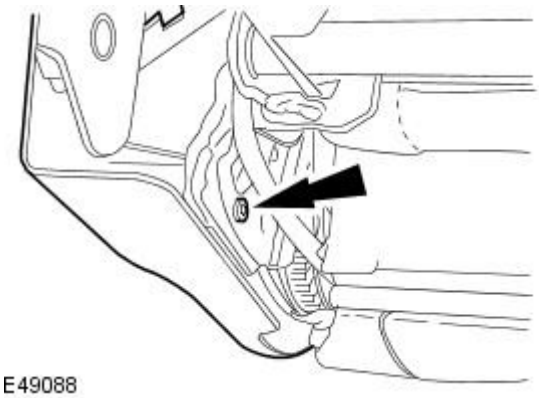

E49088

4. Detach the outer side trim panel.

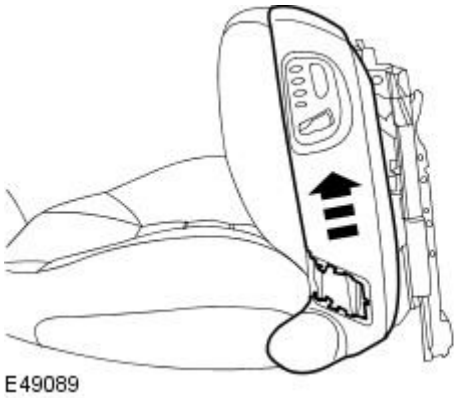

E49089

5. Remove the outer side trim panel.
   - Disconnect the electrical connectors.

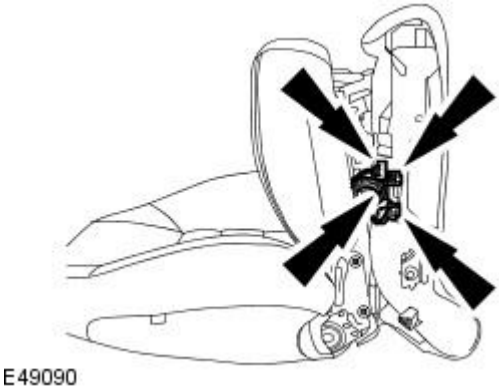

E49090

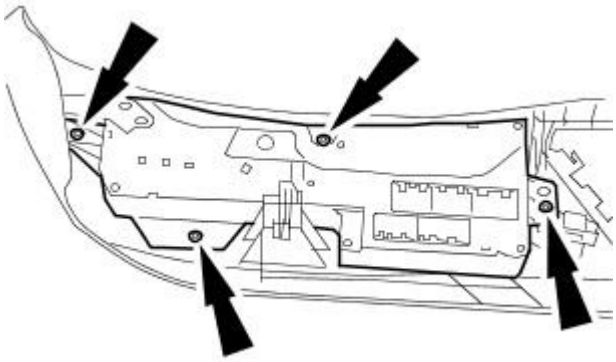

6. Remove the seat control switch.

Installation

1. To install, reverse the removal procedure.

Seating - Front Seat Backrest

Disassembly and Assembly

Disassembly

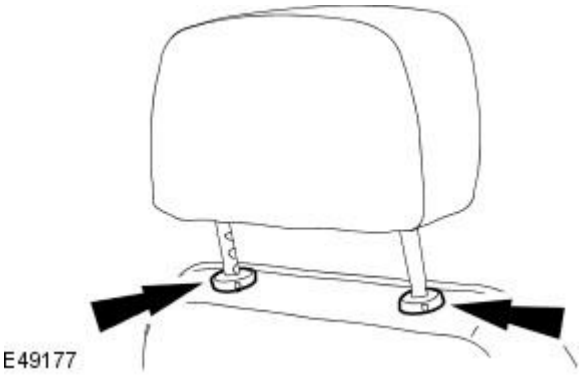

1. Remove the front seat backrest.
   For additional information, refer to: Front Seat Backrest (501-10 Seating, Removal and Installation).
2. Remove the front seat head restraint.
   - Press the retaining tangs.

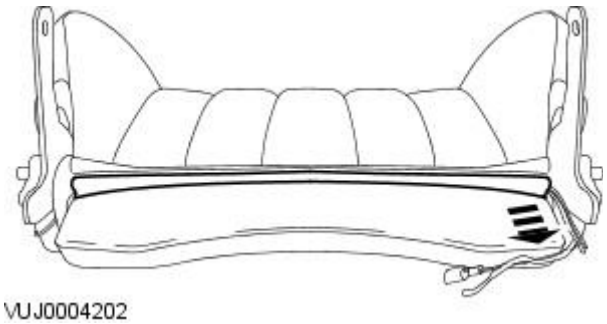

3. Detach the front seat backrest cover.
   - Detach the retaining strip.

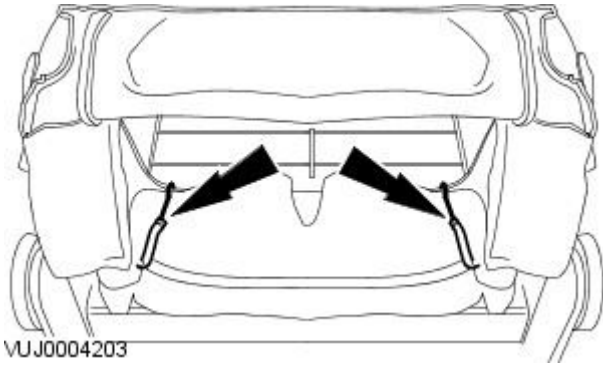

4. Detach the front seat backrest cover tension cords from the front seat backrest.

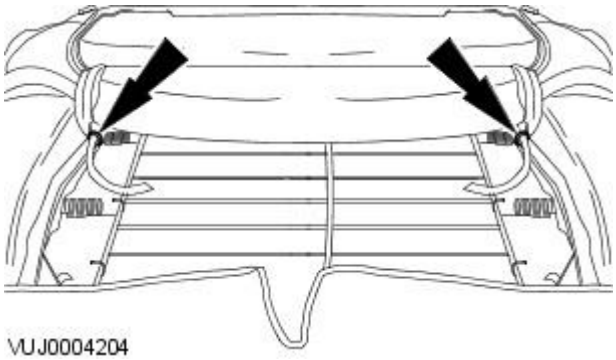

5. Detach the front seat backrest cover.
   - Remove and discard the hog rings.

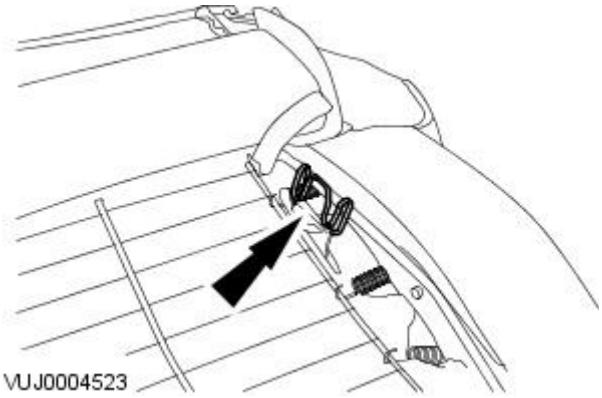

6. Detach the front seat backrest cover retaining hook.

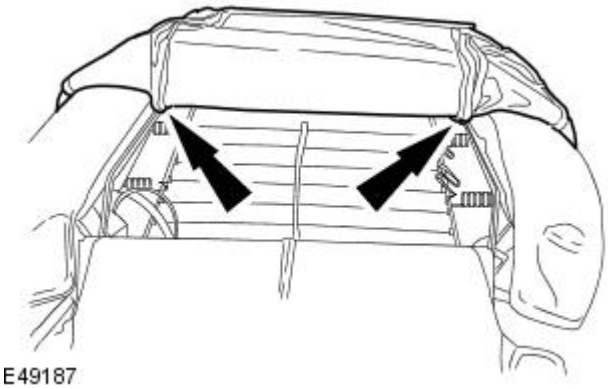

7. Detach the front seat backrest cover.

- Remove and discard the hog rings.

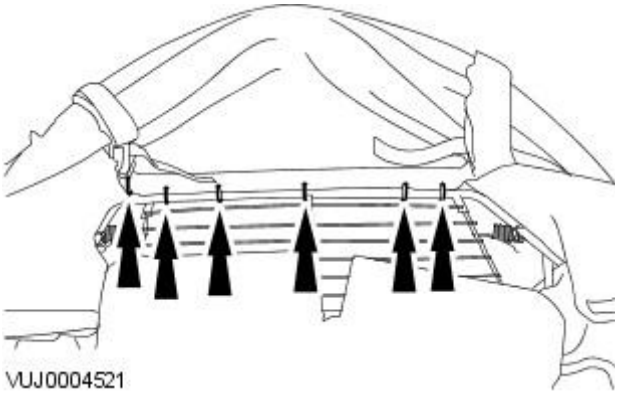

8. Detach the front seat backrest cover.

- Remove and discard the hog rings.

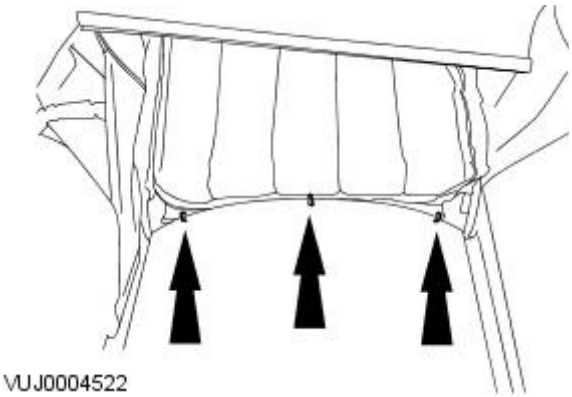

9. Detach the backrest cover.

- Remove and discard the hog rings.

10. Detach the front seat backrest cover.

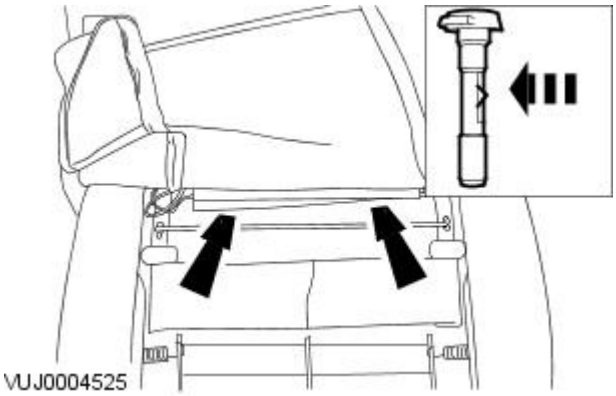

11. Remove the front seat head restraint guides.

- Using a suitable tool, press the locking tangs.

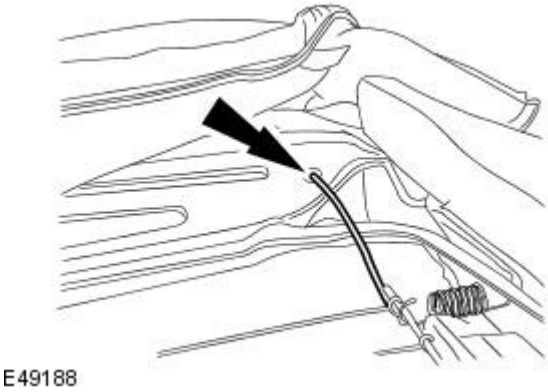

12. NOTE: Left-hand shown, right-hand similar.

Detach the front seat backrest cover tension cords from the front seat backrest.

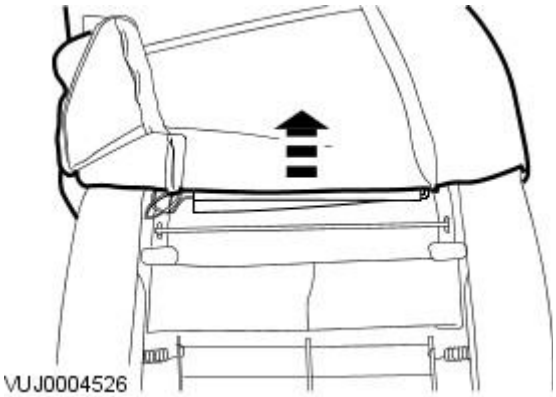

13. Remove the front seat backrest cover.

Assembly

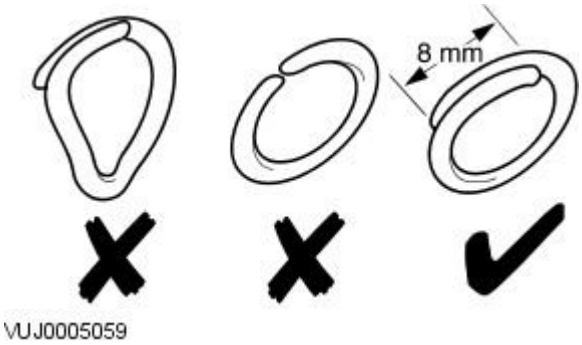

1. NOTE: Install new hog rings. Use hog ring pliers to close the hog rings. Do not use any other tool. The hog rings must be closed to overlap as illustrated.

To assemble, reverse the disassembly procedure.

Seating - Front Seat Cushion

Disassembly and Assembly

Disassembly

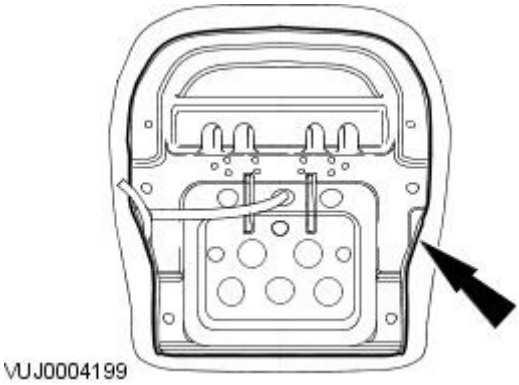

1. Remove the front seat cushion. For additional information, refer to Front Seat Cushion.
2. Remove the seat cushion cover.
   - Unclip the seat cushion from the seat base.
   - Cut the hog rings.

Assembly

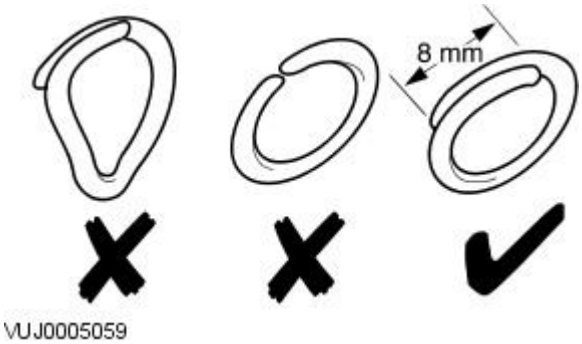

1. NOTE: Install new hog rings. Use hog ring pliers to close the hog rings. Do not use any other tool. The hog rings must be closed to overlap as illustrated.

   To assemble, reverse the disassembly procedure.

Seating - Rear Seat Backrest4-Door, Vehicles With: 70 / 30 Split Seat

Disassembly and Assembly

Disassembly

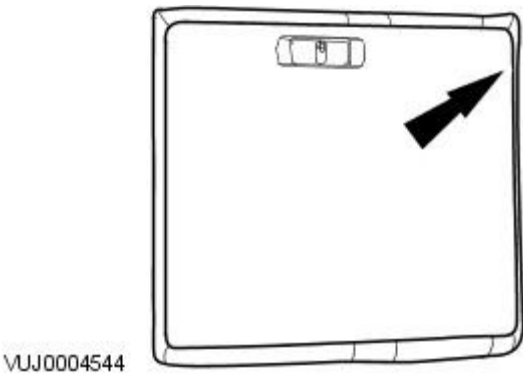

1. Remove the rear seat backrest - folding. For additional information, refer to Rear Seat Backrest—Folding.
2. Remove the head restraint(s).
3. Detach the backrest cover from the backrest.
   - Detach the retaining strip.

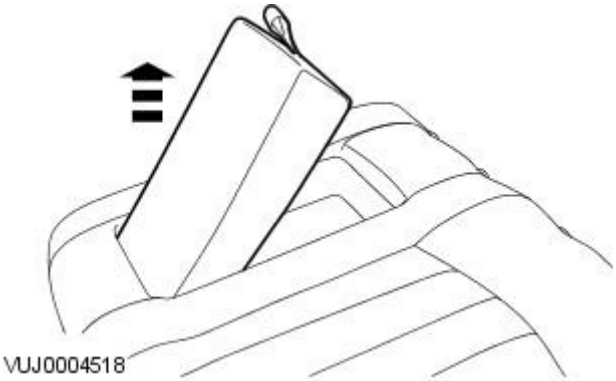

4. NOTE: The armrest pivot pins are held in place by split pins. The armrest should be lifted to gain access to the split pins.

   • NOTE: Moving the armrest left and right assists in the removal of the pivot pins.

   Remove the armrest.

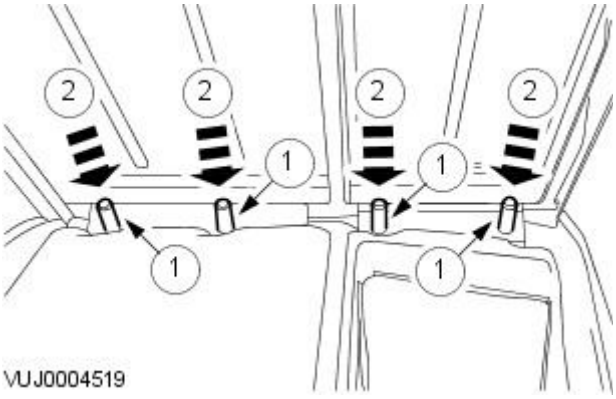

5. Remove the head restraint guides.
   1. Using a suitable screwdriver, press the locking tangs.
   2. Remove the head restraint guides.

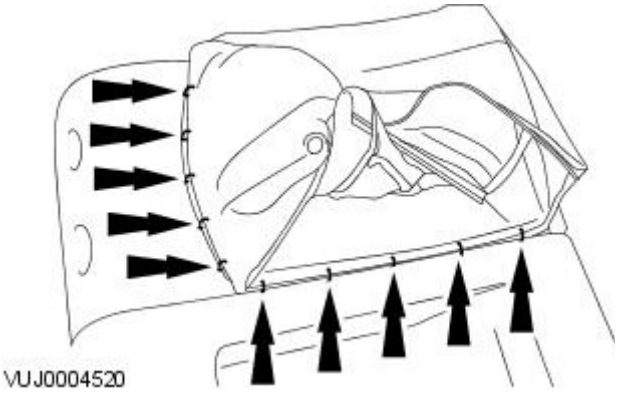

6. Remove the backrest cover.
   - Cut the hog rings.

Assembly

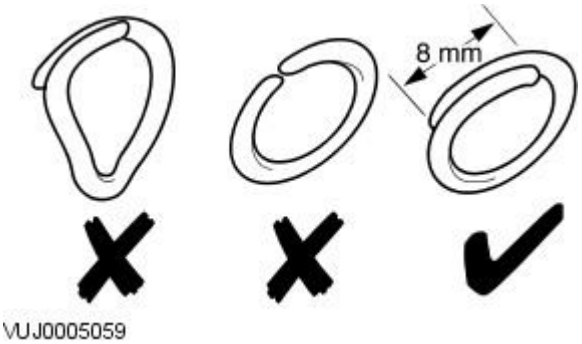

1. NOTE: Install new hog rings. Use hog ring pliers to close the hog rings. Do not use any other tool. The hog rings must be closed to overlap as illustrated.

To assemble, reverse the disassembly procedure.

Seating - Rear Seat BackrestWagon, Vehicles With: 70 / 30 Split Seat

Disassembly and Assembly

Disassembly

1. Remove the rear seat backrest.
   For additional information, refer to: Rear Seat Backrest - Wagon, Vehicles With: 70/30 Split Seat (501-10 Seating, Removal and Installation).
2. Remove the rear seat head restraints (if equipped).
3. Remove the rear seat backrest hinge bracket.

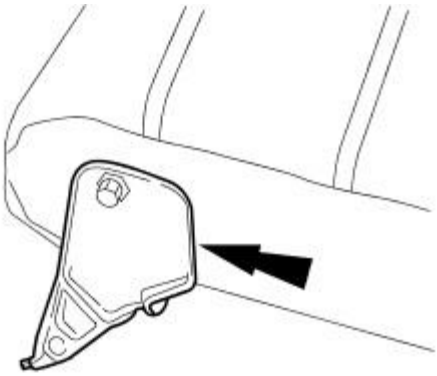

E49070

4. NOTE: Raise the armrest to assist in removal.

• NOTE: Moving the armrest left and right assists in the removal of the pivot pins.

   Remove the armrest.

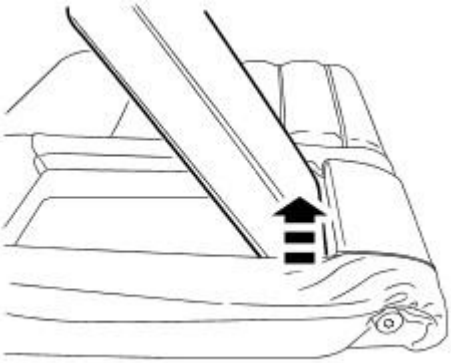

E49071

5. Remove the rear seat backrest latch finisher.

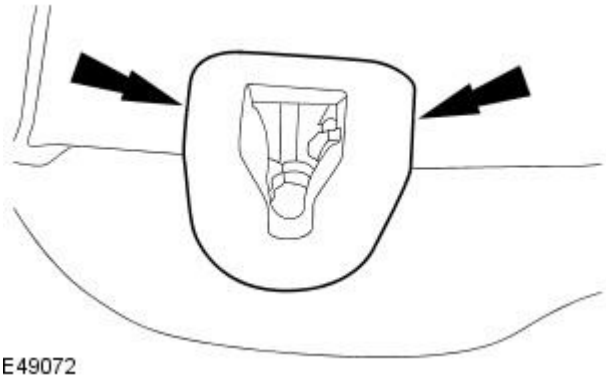

E49072

6. Detach the rear seat backrest cover from the backrest.
   - Detach the retaining strip.

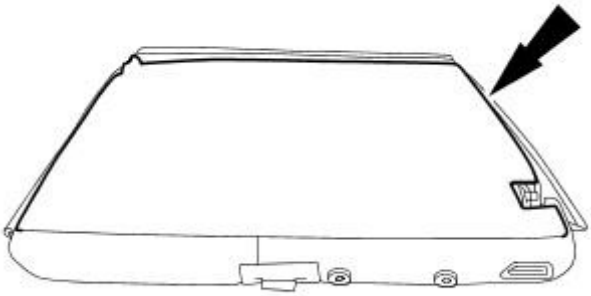

E49073

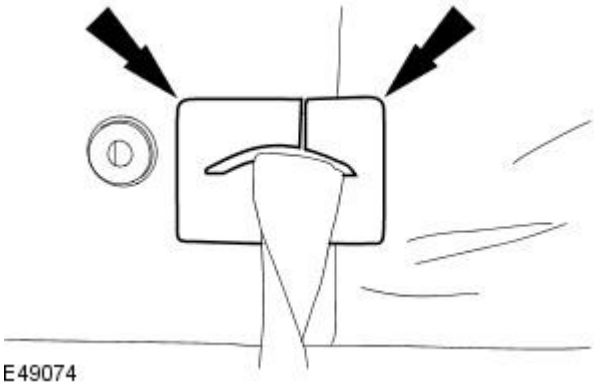

E49074

7. Detach the rear centre safety belt guide finisher.

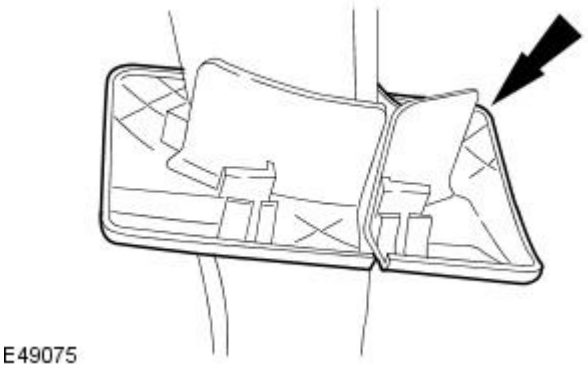

E49075

8. Remove the rear centre safety belt guide finisher.

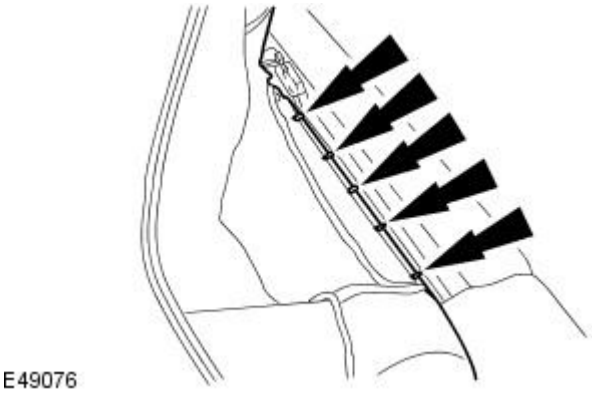

E49076

9. Detach the rear seat backrest cover.

- Remove and discard the hog rings.

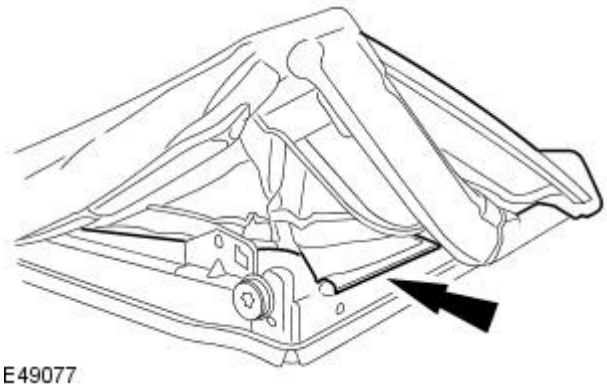

E49077

10. Detach the rear seat backrest cover.

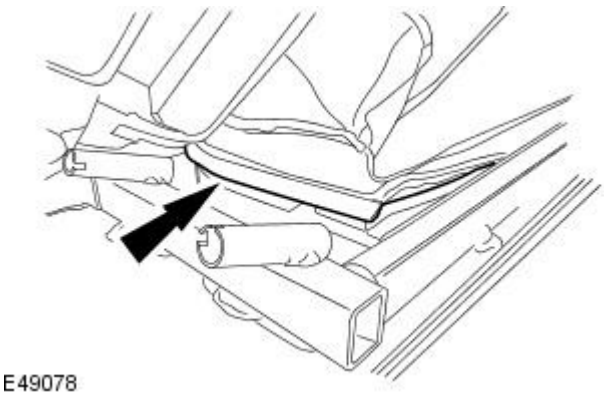

E49078

11. Detach the rear seat backrest cover.

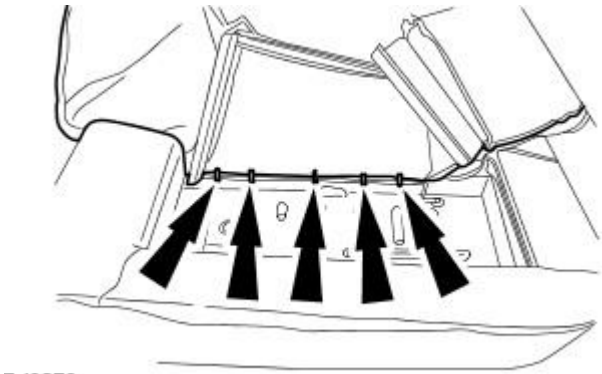

E49079

12. Detach the rear seat backrest cover.

- Remove and discard the hog rings.

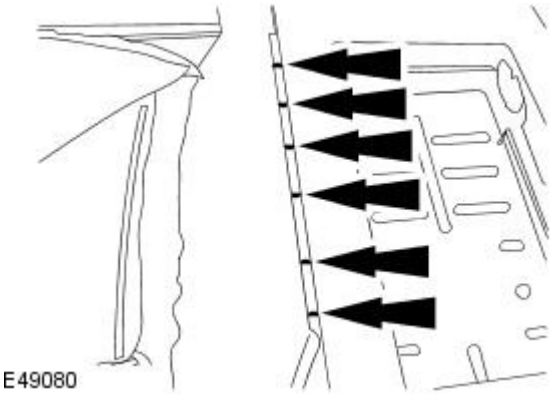

E49080

13. Detach the rear seat backrest cover.

- Remove and discard the hog rings.

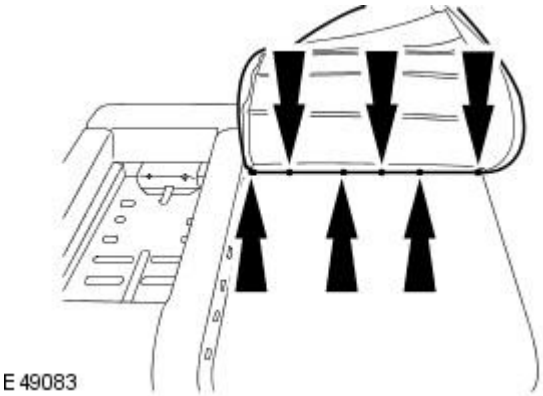

E49083

14. Detach the rear seat backrest cover.

- Remove and discard the hog rings.

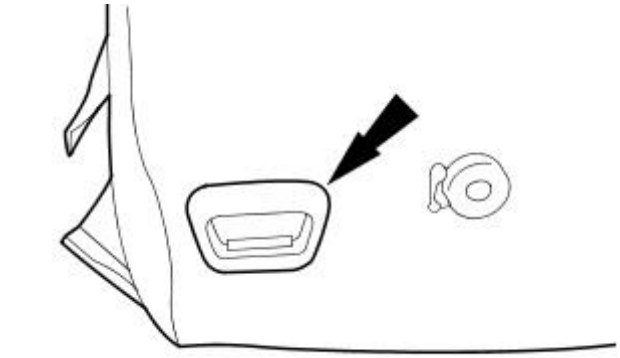

E49082

15. Detach the rear seat backrest cover from the backrest latch.

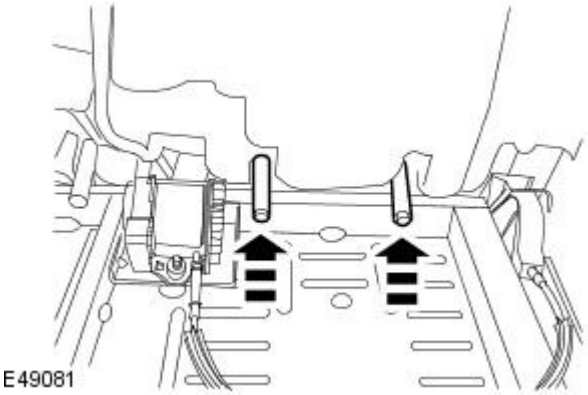

E49081

16. Remove the rear sear head restraint guides.

- Using a suitable tool, press the locking tangs.
- Remove the rear seat head restraint guides.

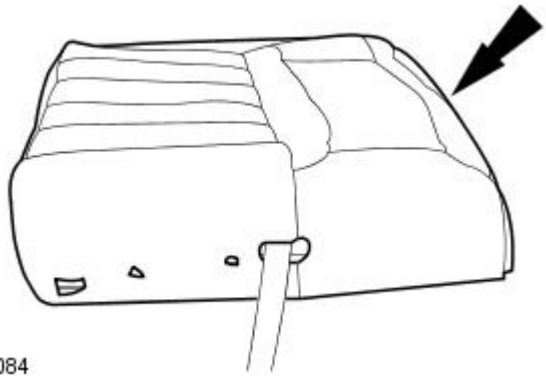

17. Remove the rear seat backrest cover.

- Pass the centre safety belt through the rear seat backrest cover.

Assembly

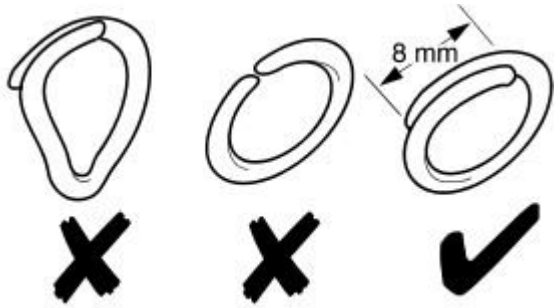

1. NOTE: Install new hog rings. Use hog ring pliers to close the hog rings. Do not use any other tool. The hog rings must be closed to overlap as illustrated.

To assemble, reverse the disassembly procedure.

Seating - Rear Seat Backrest

Disassembly and Assembly

Disassembly

1. Remove the rear seat backrest - fixed. For additional information, refer to Rear Seat Backrest—Fixed.
2. Remove the head restraints.
3. Detach the backrest cover.
   - Cut the hog rings.

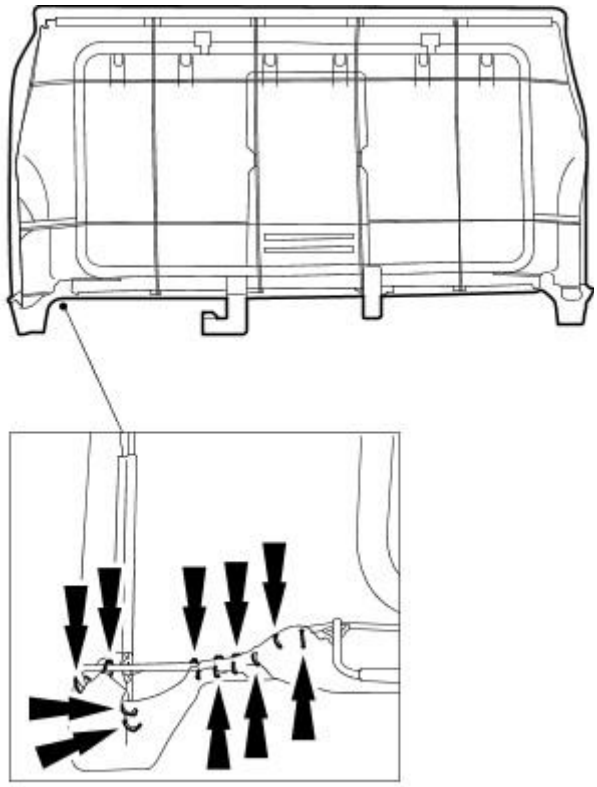

VUJ0004539

4. Detach the backrest cover.
   - Detach the retaining strips.

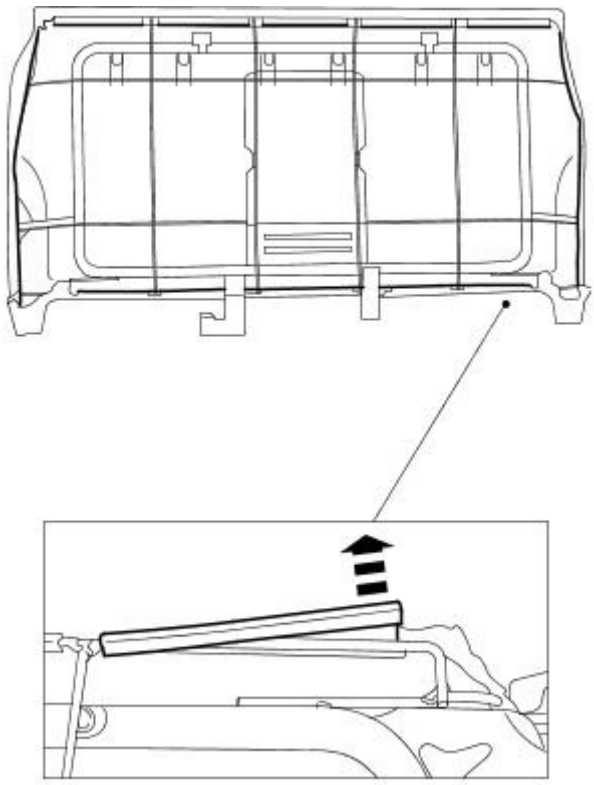

VUJ0004538

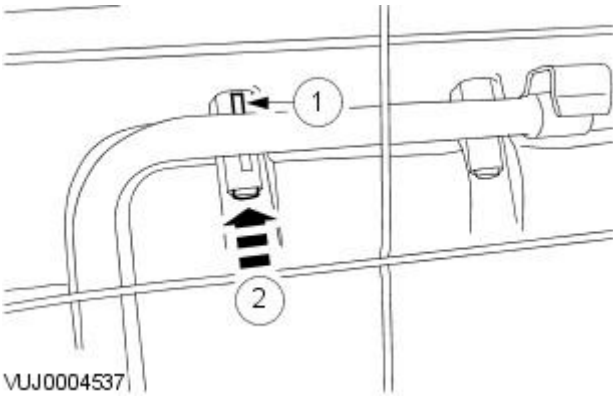

VUJ0004537

5. Remove the head restraint guides.

1. Using a suitable screwdriver, press the locking tang.
2. Remove the head restraint guide.

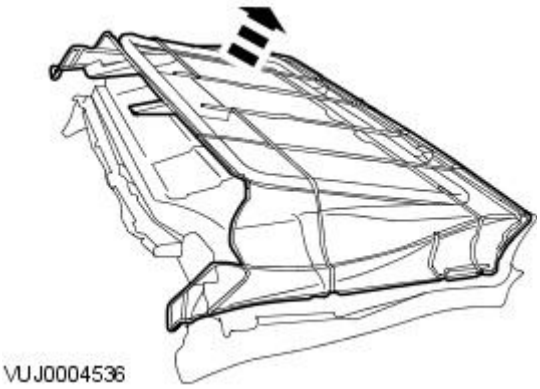
VUJ0004536

6. Remove the backrest frame from the backrest cushion and cover.

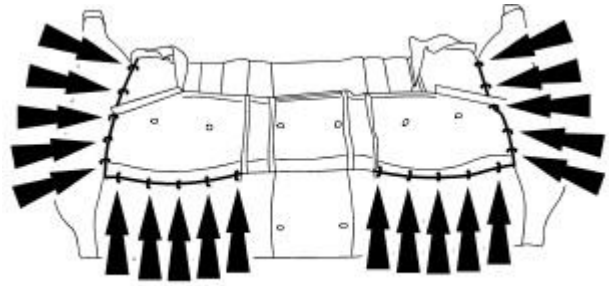
VUJ0004535

7. Detach the backrest cover from the cushion.

- Cut the hog rings.

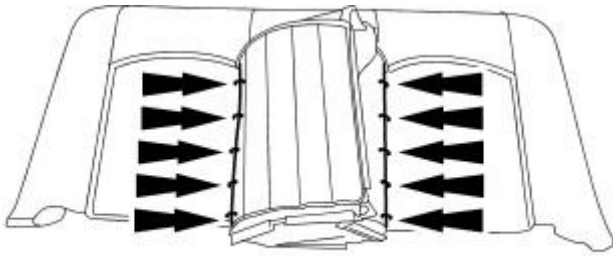
VUJ0004534

8. Remove the backrest cover.

- Cut the hog rings.

Assembly

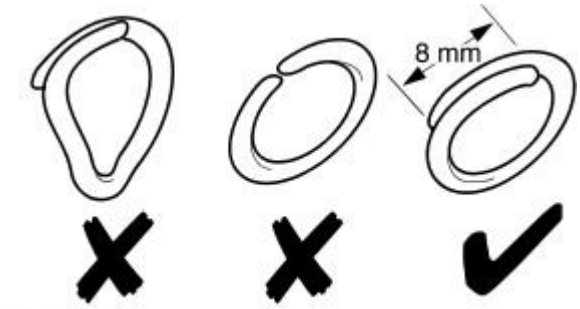

VUJ0005059

1. NOTE: Install new hog rings. Use hog ring pliers to close the hog rings. Do not use any other tool. The hog rings must be closed to overlap as illustrated.

To assemble, reverse the disassembly procedure.

Seating - Rear Seat Bolster

Disassembly and Assembly

Disassembly

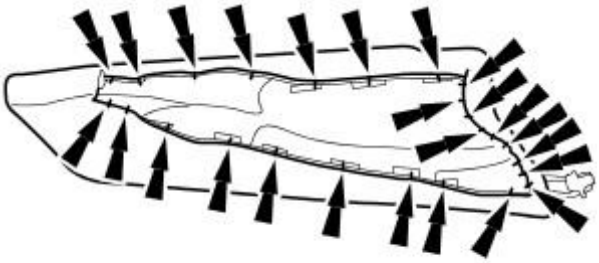

VUJ0004660

1. Remove the rear seat backrest - bolster. For additional information, refer to Rear Seat Backrest—Bolster.
2. Remove the backrest bolster cover.
   - Cut the hog rings.

Assembly

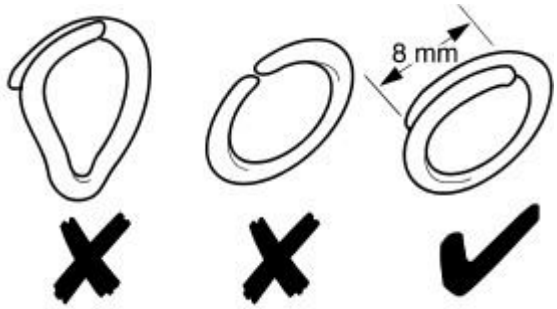

VUJ0005059

1. NOTE: Install new hog rings. Use hog ring pliers to close the hog rings. Do not use any other tool. The hog rings must be closed to overlap as illustrated.

   To assemble, reverse the disassembly procedure.

Seating - Rear Seat Cushion

Disassembly and Assembly

Disassembly

1. Remove the rear seat cushion. For additional information, refer to Rear Seat Cushion.
2. Detach the seat cushion cover.
   - Cut the hog rings.

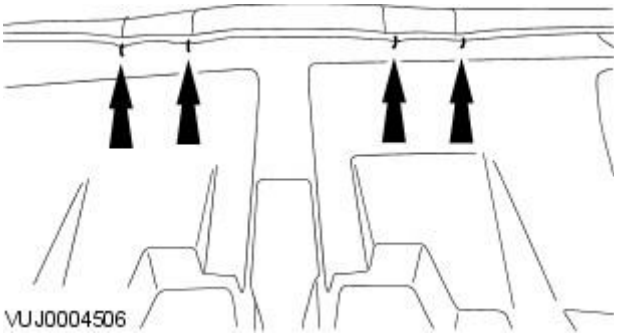

VUJ0004506

3. Cut the seat cushion cover tension cord retaining hog rings.

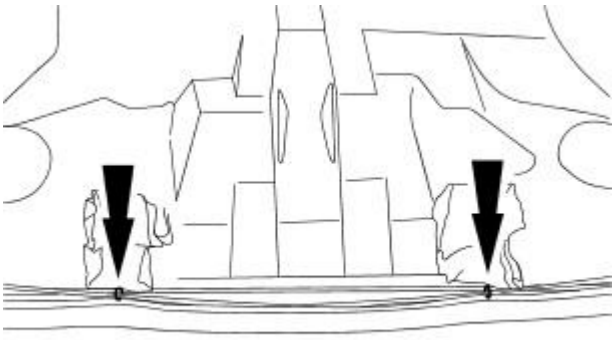

VUJ0004507

4. Detach the seat cushion cover tension cords from the seat cushion.

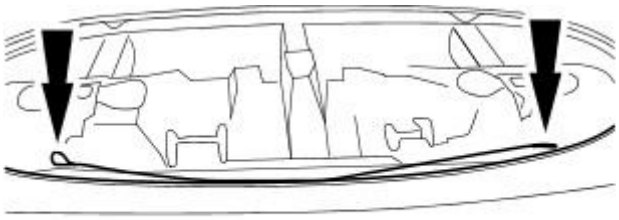

VUJ0004508

5. Detach the seat cushion cover from the seat cushion.

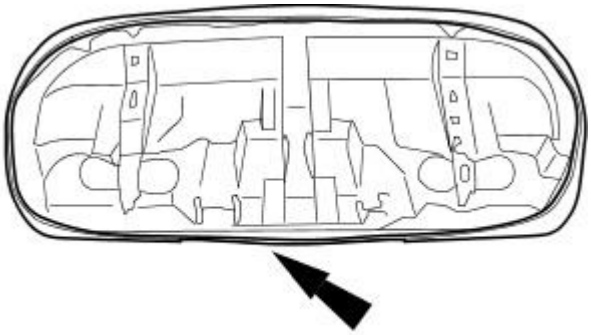

VUJ0004509

6. Detach the seat cushion cover.
   - Cut the hog rings.

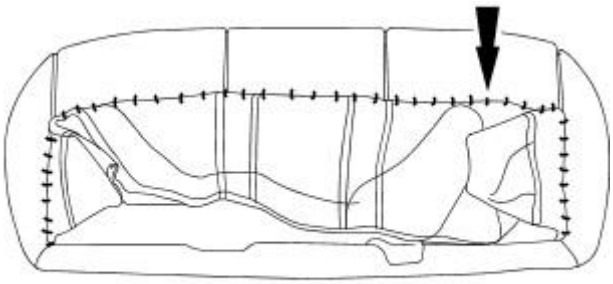

VUJ0004510

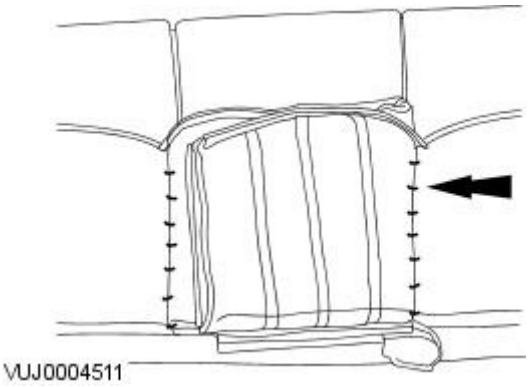

7. Remove the seat cushion cover.

- Cut the hog rings.

Assembly

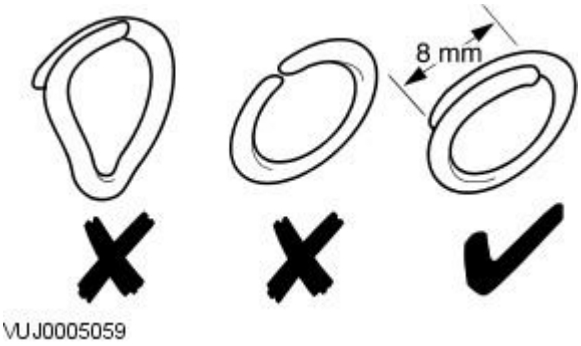

1. NOTE: Install new hog rings. Use hog ring pliers to close the hog rings. Do not use any other tool. The hog rings must be closed to overlap as illustrated.

To assemble, reverse the disassembly procedure.

Glass, Frames and Mechanisms -

Adhesive

Description	Specification
Windshield Adhesive	WSS-M2G379-A6A

Torque Specifications

Description	Nm	lb-ft	lb-in
Front window glass retaining bolts	8	-	71
Rear quarter light retaining screws	7	-	62
Rear window glass guide rail retaining nut	7	-	62
Window regulator retaining screws	7	-	62
Liftgate window glass to liftgate window glass hinge retaining bolts	9	-	80

Published: 11-May-2011

Glass, Frames and Mechanisms - Glass, Frames and Mechanisms

Description and Operation

This vehicle has a fully bonded, laminated front windshield glass glazed directly to the body. The front windshield glass is available in six versions:

- Standard mirror non heated windshield glass.
- Standard mirror with heated windshield glass.
- Electrochromic mirror non heated windshield glass.
- Electrochromic mirror with heated windshield glass.
- Electrochromic mirror non heated windshield glass with rain sensor.
- Electrochromic mirror with heated windshield glass and rain sensor.

The rear windshield glass on 4-door vehicles is a fully bonded toughened glass that combines the antenna for the audio unit within the rear defrost grid. The rear windshield glass is available in two versions:

- Heated with integrated AM/FM antenna
- Heated with integrated AM/FM antenna and TV antenna

The liftgate window glass on wagon is toughened glass, bonded to a mounting bracket which in turn is bolted to the liftgate hinge assembly. The liftgate window glass can be opened independently of the liftgate, and incorporates an electrically operated liftgate window glass release switch and also the rear wiper pivot arm. The liftgate window glass has integral circuits for the liftgate window glass release switch and the defrost grid. The liftgate window glass must be adjusted for correct body clearance.
For additional information, refer to: Liftgate Window Glass Adjustment (501-11 Glass, Frames and Mechanisms, General Procedures).

The heated windshield glass is controlled by the dual automatic temperature control module when the ignition is in the RUN position and the heated windshield glass switch has been activated. Four minutes after activation, the heated windshield glass will automatically switch off. The function is also turned off if the customer deselects before the four minute time has elapsed.

The heated rear windshield glass is controlled by the dual automatic temperature control when the rear windshield glass defrost button is operated. When the switch is operated an indicator in the switch will illuminate indicating that the system is operative. Ten minutes after activation, the heated rear windshield glass will automatically turn off. The function is also turned off if the customer deselects before the ten minute time has elapsed.

The front windows are electrically operated and the rear can be electrically or manually operated. Each electrically powered window can be operated individually or from the main window control switch unless the rear window override switch is active which prevents operation of the rear window control switches.

All switches have two positions enabling either proportional (first position) or automatic ("one-touch" or second position) window activation in the upward or downward direction.

If the system detects an obstacle while the "one-touch" up function is activated the window will stop motion and reverse to a position at least 200 mm (7.87 in) open this is known as "bounce back".

If the system has not been initialized (battery disconnected etc.) then the "one touch" up function will not be active, however "one-touch" down will be active.

The rear quarter window glass on wagon is a fully bonded toughened glass that incorporates the antenna for TV and, for Japan, vehicle information and communication system (VICS). The rear quarter window glass is available in three versions:

- Without antenna.
- With integrated TV antenna.
- With integrated TV and VICS antenna.

Glass, Frames and Mechanisms - Glass, Frames and Mechanisms

Diagnosis and Testing

Inspection and Verification

1. **1.** Verify the customer concern by operating the system.
2. **2.** Visually inspect for obvious signs of mechanical and electrical damage.

Visual Inspection Chart

Mechanical	Electrical
• Window glass • Window regulator	• Blown fuse(s) • Window motor • Damaged wiring harness • Loose or corroded connectors • Circuitry open/shorted

3. **3.** If an obvious cause for an observed or reported concern is found, correct the cause (if possible) before proceeding to the next step.
4. **4.** If the concern is not visually evident, verify the symptom and refer to the approved Jaguar diagnostic system.

Glass, Frames and Mechanisms - Door Window Motor Initialization

General Procedures

1. NOTE: After the battery has been disconnected it is necessary to initialize each door window motor separately to operate the "one-touch" up function.

Operate the window control switch until the door window glass is in the fully closed position, continue to operate the window control switch for a further two seconds.

2. Release the window control switch.

3. Operate the window control switch in the closed position and continue to operate the window control switch for a further two seconds.

4. Operate the window control switch until the door window glass is in the fully open position ("one-touch" down).

5. NOTE: If the door window motor initialization has been completed correctly, when the window control switch is operated, the door window glass should move to the fully closed position ("one-touch" up) automatically.

• NOTE: If the door window glass does not fully close automatically ("one-touch" up), repeat the complete procedure.

Operate the window control switch once to the close position.

6. Repeat the door window motor initialization for each door window motor.

Glass, Frames and Mechanisms - Liftgate Window Glass Adjustment

General Procedures

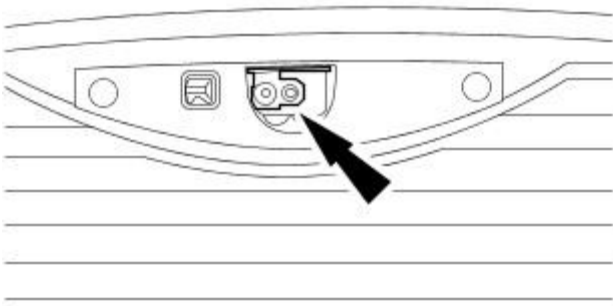

E49816

1. Make sure the rear wiper mounting arm is in the parked position.

2. Open the liftgate window glass.

3. Open the liftgate.

4. Remove the liftgate trim panel.
For additional information, refer to: Liftgate Trim Panel (501-05 Interior Trim and Ornamentation, Removal and Installation).

5. Loosen the rear wiper motor retaining nuts.

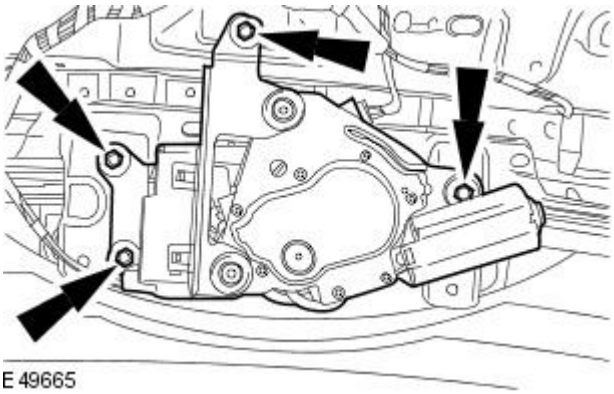

E49665

6. Close the liftgate.

7. NOTE: The aid of an assistant in the loadspace will be required to align the rear wiper motor to the liftgate window glass.

Make sure the liftgate glass latch and rear wiper mounting arm locate correctly into the liftgate latch actuator and rear wiper motor.

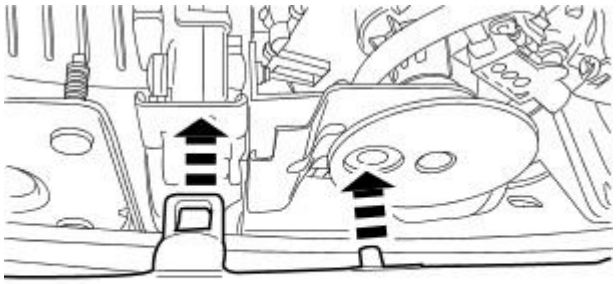

E49656

8. Close the liftgate glass.

9. CAUTIONS:

With the aid of an assistant in the loadspace, fully tighten the rear wiper motor retaining nuts. Failure to follow this instruction may result in damage to the vehicle.

Make sure the rear wiper motor does not move whilst tightening the retaining nuts. Failure to follow this instruction may result in damage to the vehicle.

Tighten the rear wiper retaining bolts in the order shown.

1. Tighten to 8 Nm.

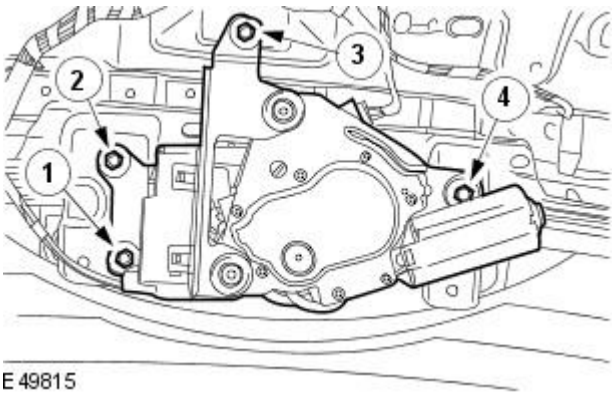

E49815

10. Visually check the liftgate window glass for correct alignment.

11. Install the liftgate trim panel.
For additional information, refer to: Liftgate Trim Panel (501-05 Interior

Trim and Ornamentation, Removal and Installation).

Glass, Frames and Mechanisms - Front Door Window Glass

Removal and Installation

Removal

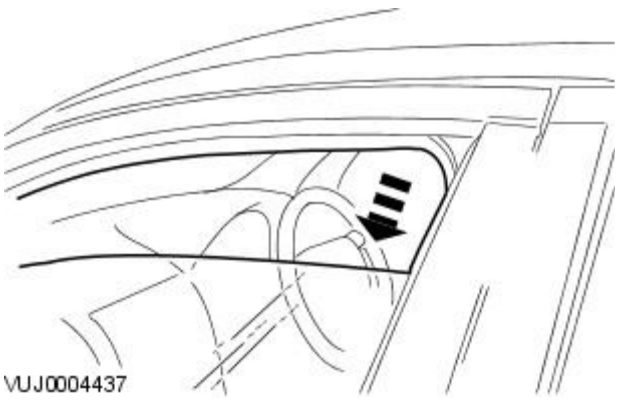

1. Lower the front door window glass approximately 290 mm (11.41 in).

2. Remove the front door trim panel.
For additional information, refer to: Front Door Trim Panel (501-05 Interior Trim and Ornamentation, Removal and Installation).

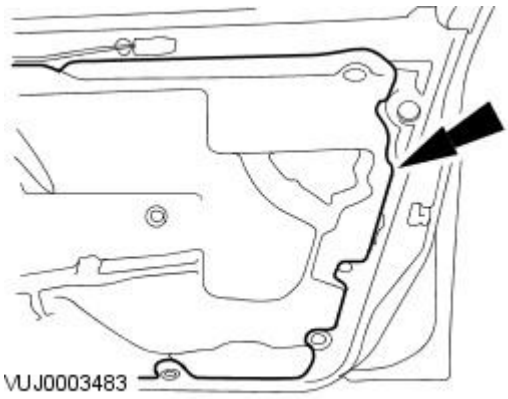

3. CAUTION: Do not touch the adhesive surface as rebonding will be impaired.

Detach the front door weathershield.

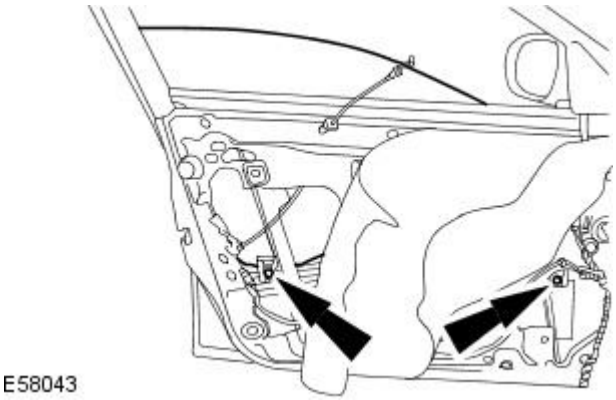

4. Remove the front door window glass.

- Loosen the retaining bolts.

Installation

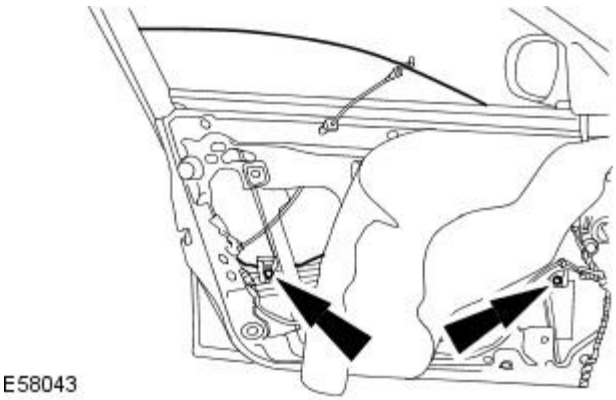

1. Install the front door window glass, but do not tighten the retaining bolts.

2. Connect the window control switch electrical connector.

3. Power the front door window glass to the fully closed position.

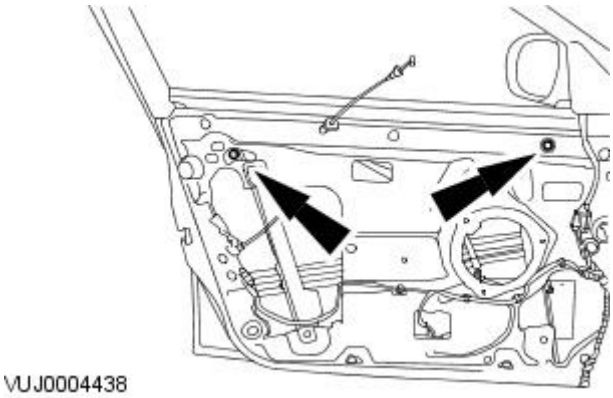

4. Tighten to 8 Nm.

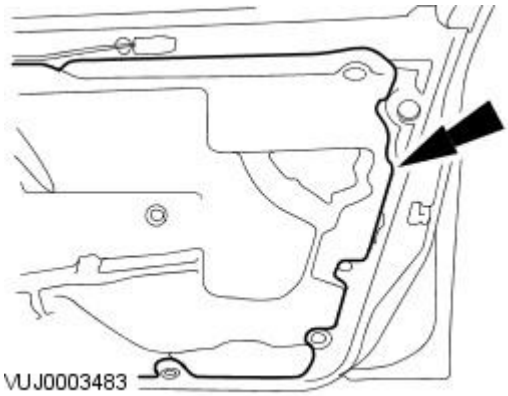

5. CAUTION: Do not touch the adhesive surface as rebonding will be impaired.

Attach the front door weathershield.

6. Install the front door trim panel.
For additional information, refer to: Front Door Trim Panel (501-05 Interior Trim and Ornamentation, Removal and Installation).

Glass, Frames and Mechanisms - Front Door Window Regulator and Motor

Removal and Installation

Removal

1. Remove the front door window glass.
   For additional information, refer to: Front Door Window Glass (501-11 Glass, Frames and Mechanisms, Removal and Installation).
2. Disconnect the electrical connector.

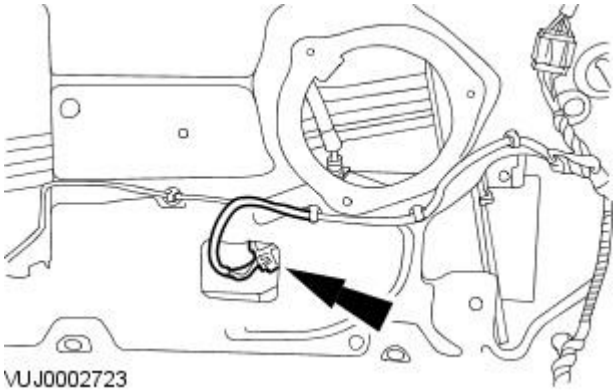

3. Remove the front door motor and window regulator.

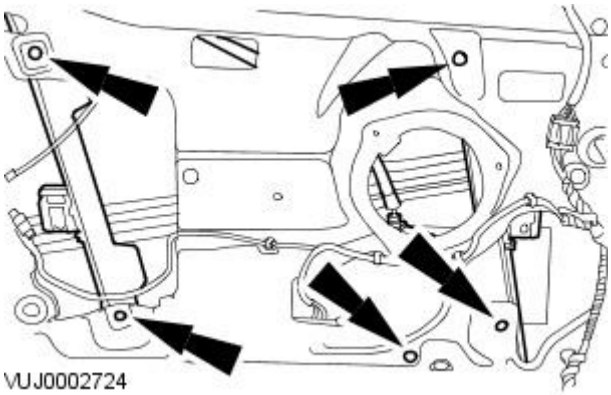

Installation

1. To install, reverse the removal procedure.
2. Tighten to 7 Nm.

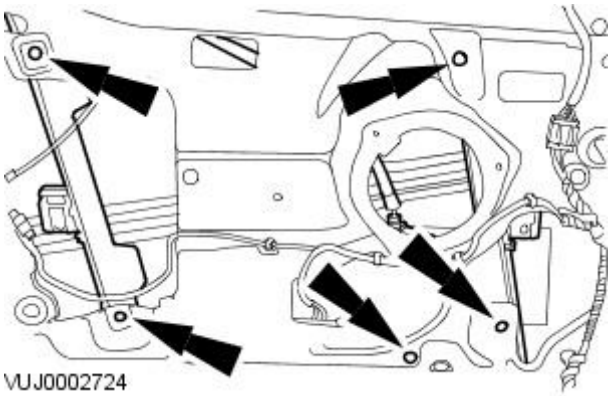

Glass, Frames and Mechanisms - Liftgate Window Glass

Removal and Installation

Removal

1. Remove the rear spoiler.
   For additional information, refer to: Rear Spoiler - Wagon (501-08 Exterior Trim and Ornamentation, Removal and Installation).
2. Detach the navigation system antenna electrical connector.

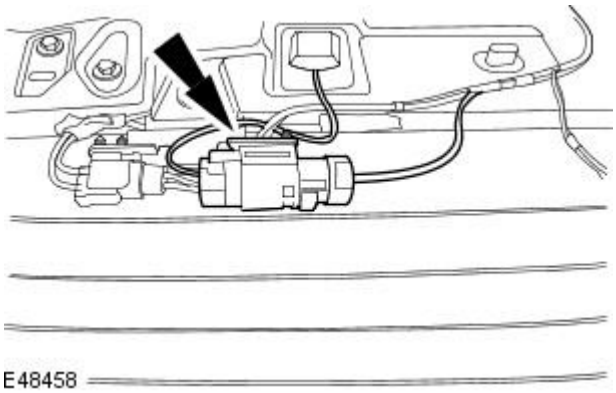

3. Disconnect the navigation system antenna electrical connector.

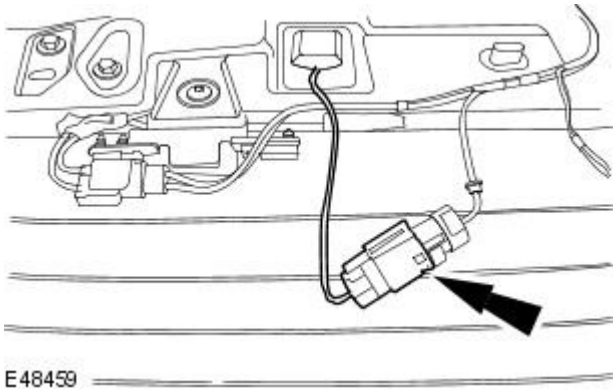

4. Detach the defrost grid wire electrical connector.

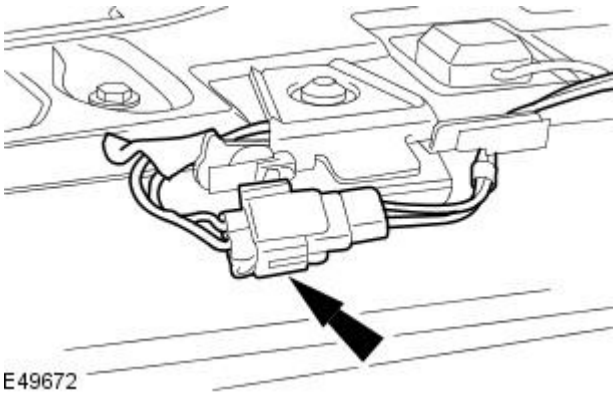

5. Disconnect the defrost grid wire electrical connector.

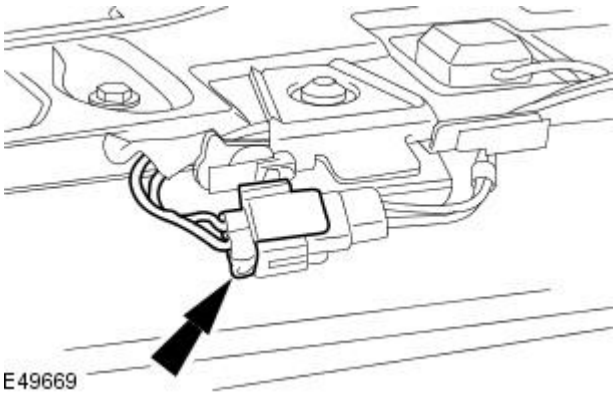

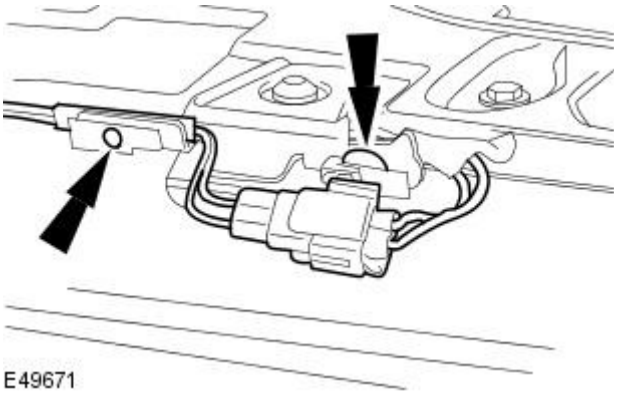

6. Detach the liftgate window glass release switch electrical connector.

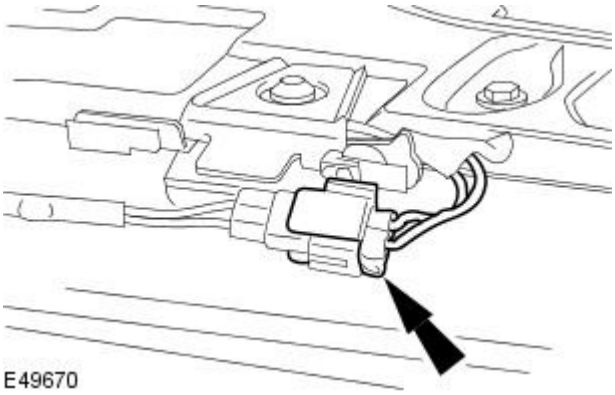

7. Disconnect the liftgate window glass release switch electrical connector.

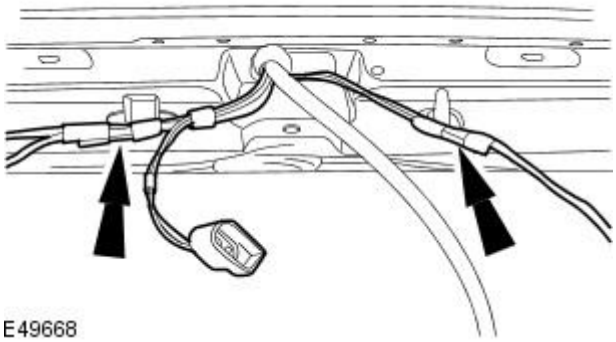

8. Detach the liftgate window glass wiring harness retaining clips.

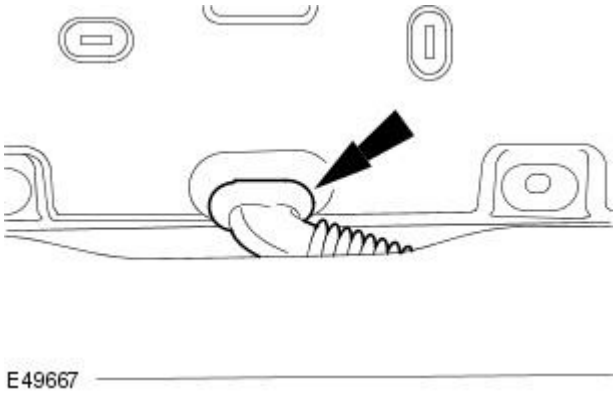

9. Detach the liftgate window glass wiring harness grommet.

- Pass the wiring harness through the aperture.

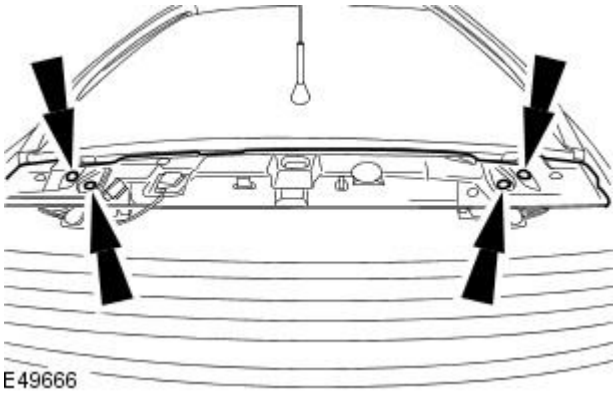

10. CAUTION: Make sure the liftgate window glass is in the open position before removing the retaining bolts. Failure to follow this instruction may result in damage to the vehicle.

• NOTE: Make sure the liftgate window glass is supported before removing the retaining bolts.

• NOTE: Liftgate window glass shown closed for clarity.

Remove the liftgate window glass.

Installation

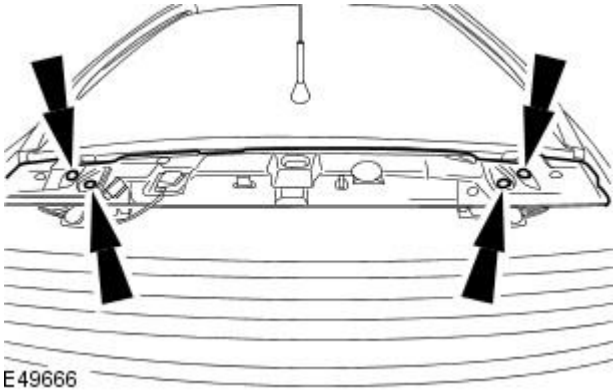

1. CAUTION: Make sure the liftgate window glass does not contact the vehicle body work when the liftgate window glass is closed. Failure to follow this instruction may result in damage to the vehicle.

• NOTE: Align the liftgate window glass retaining bolts centrally to the liftgate window glass retaining bolt holes.

Install the liftgate window glass.

1. Tighten to 9 Nm.

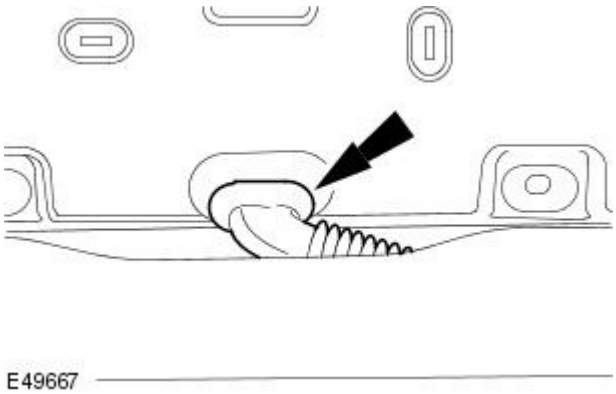

2. Attach the liftgate window glass wiring harness grommet.

- Pass the wiring harness through the aperture.

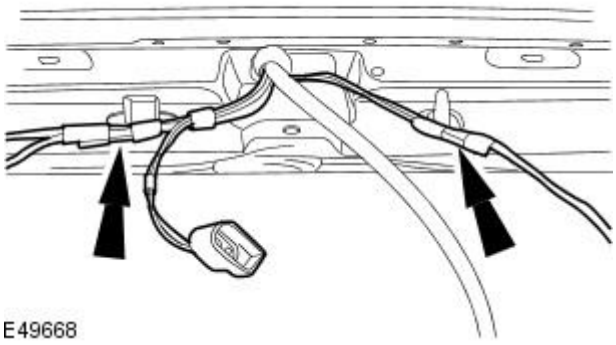

3. Attach the liftgate window glass wiring harness retaining clips.

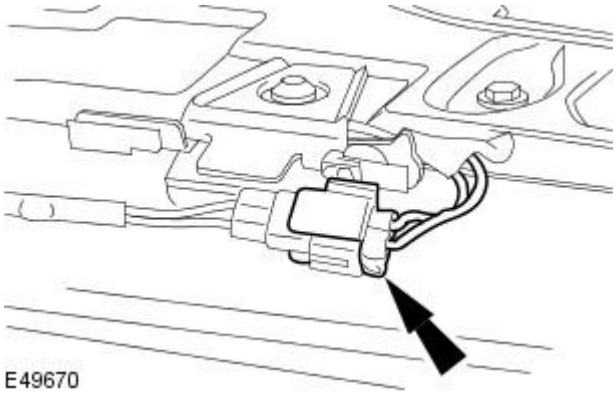

4. Connect the liftgate window glass release switch electrical connector.

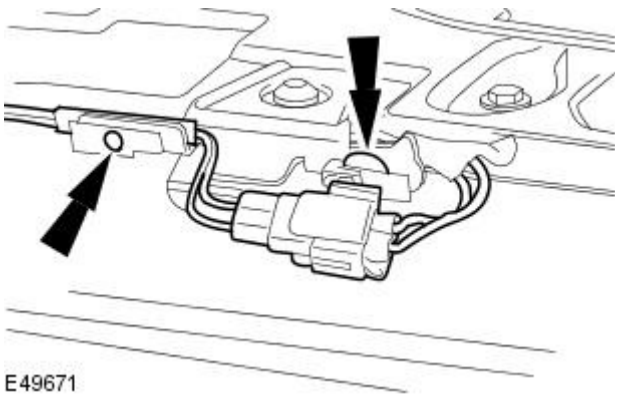

5. Attach the liftgate window glass release switch electrical connector.

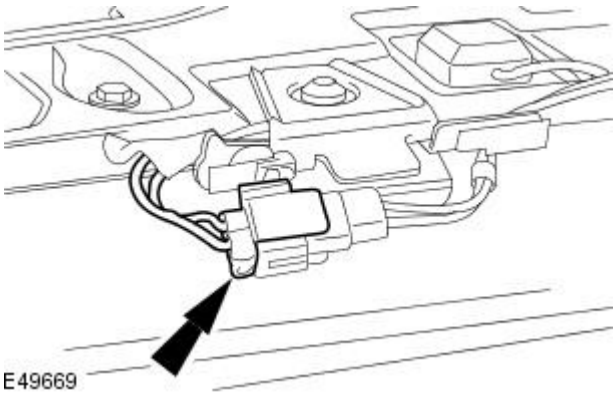

6. Connect the defrost grid wire electrical connector.

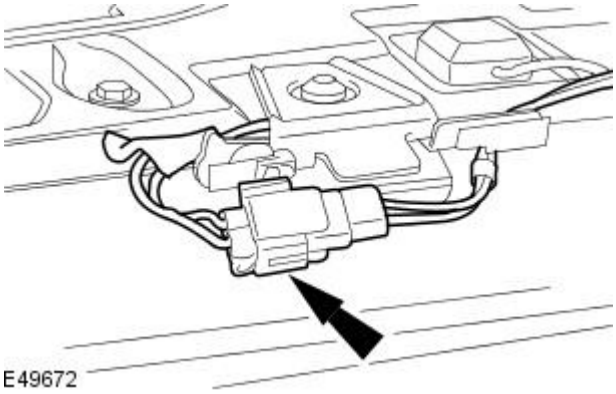

7. Attach the defrost grid wire electrical connector.

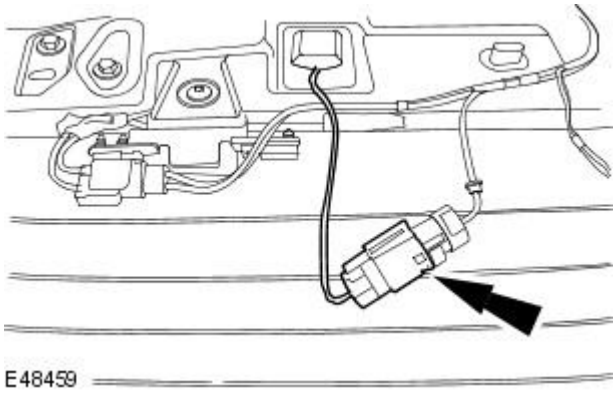

8. Connect the navigation system antenna electrical connector.

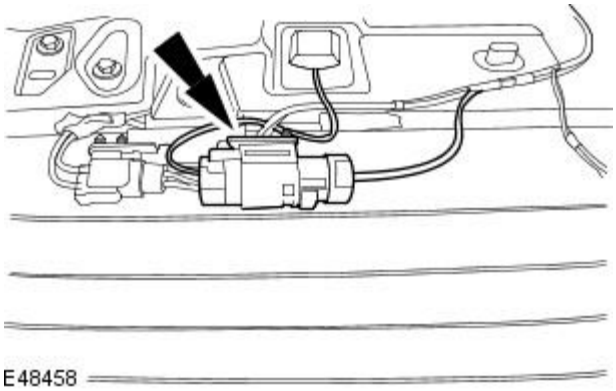

9. Attach the navigation system antenna electrical connector.

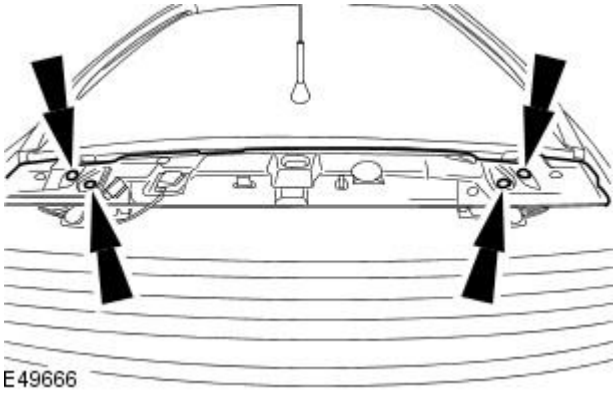

10. Loosen the liftgate window glass retaining bolts.

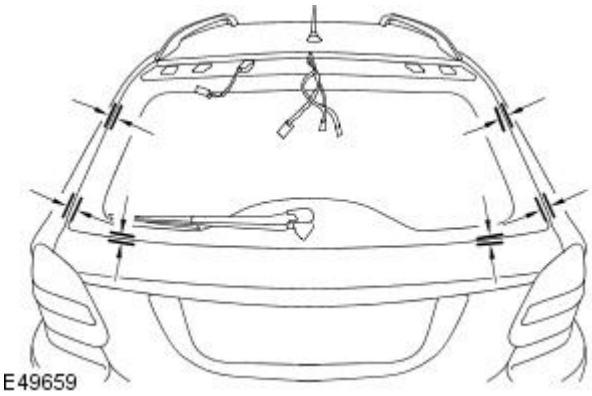

11. Align the liftgate window glass to the liftgate window glass aperture.

12. Tighten the liftgate window glass retaining bolts.

- Tighten to 9 Nm.

13. CAUTION: Make sure the rear spoiler does not contact the vehicle roof panel when the liftgate window glass is opened. Failure to follow this instruction may result in damage to the vehicle.

Install the rear spoiler.
For additional information, refer to: Rear Spoiler - Wagon (501-08 Exterior Trim and Ornamentation, Removal and Installation).

14. Visually check the alignment of the rear spoiler to the liftgate window glass aperture.

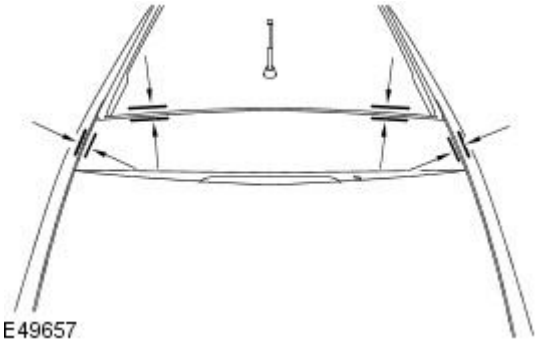

15. Close the liftgate.

16. Close the liftgate window glass.

17. Make sure the rear wiper pivot arm is in the parked position.

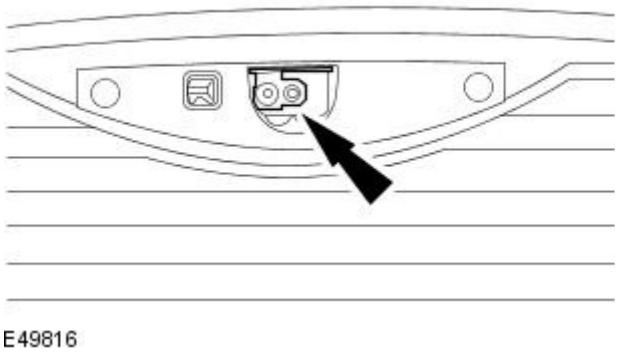

18. Open the liftgate window glass.

19. Open the liftgate.

20. Remove the liftgate trim panel.
For additional information, refer to: Liftgate Trim Panel (501-05 Interior Trim and Ornamentation, Removal and Installation).

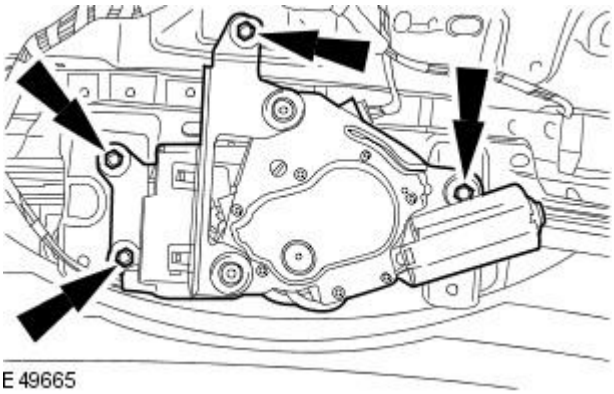

E 49665

21. Loosen the rear wiper motor retaining nuts.

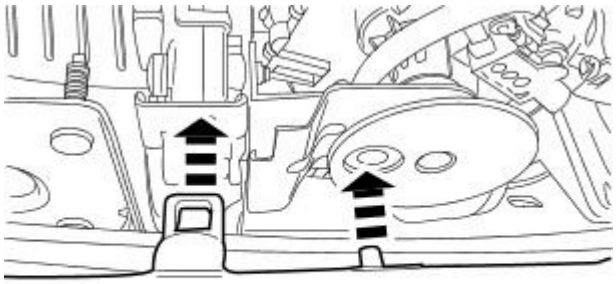

E 49656

22. Close the liftgate.

23. NOTE: The aid of an assistant in the loadspace will be required to align the rear wiper motor to the liftgate window glass.

Make sure the liftgate glass latch and rear wiper mounting arm locate correctly into the liftgate latch actuator and rear wiper motor.

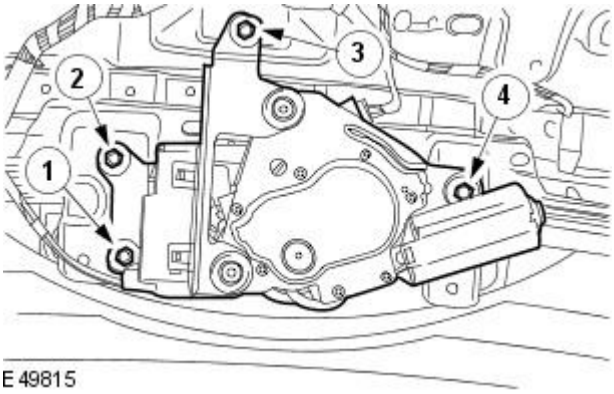

E 49815

24. Close the liftgate glass.

25. CAUTIONS:

With the aid of an assistant in the loadspace, fully tighten the rear wiper motor retaining nuts. Failure to follow this instruction may result in damage to the vehicle.

Make sure the rear wiper motor does not move whilst tightening the retaining nuts. Failure to follow this instruction may result in damage to the vehicle.

Tighten the rear wiper motor retaining nuts in the order shown.

- Tighten to 8 Nm.

26. Install the liftgate trim panel.
For additional information, refer to: Liftgate Trim Panel (501-05 Interior Trim and Ornamentation, Removal and Installation).

Glass, Frames and Mechanisms - Rear Door Fixed Window Glass

Removal and Installation

Removal

1. Remove the rear door trim panel. For additional information, refer to Section 501-05 Interior Trim and Ornamentation.

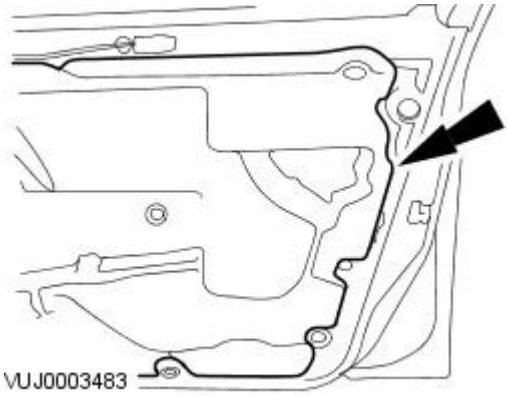

2. CAUTION: Do not touch the adhesive surface as rebonding will be impaired.

Peel back the weathershield.

3. Detach the window glass surround trim.

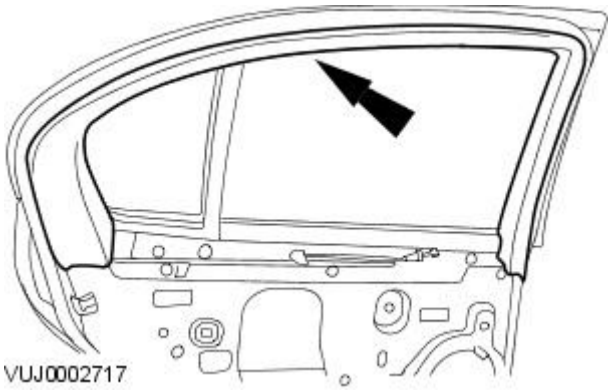

4. CAUTION: Do not bend or deform the interior weatherstrip.

Remove the door interior weatherstrip.

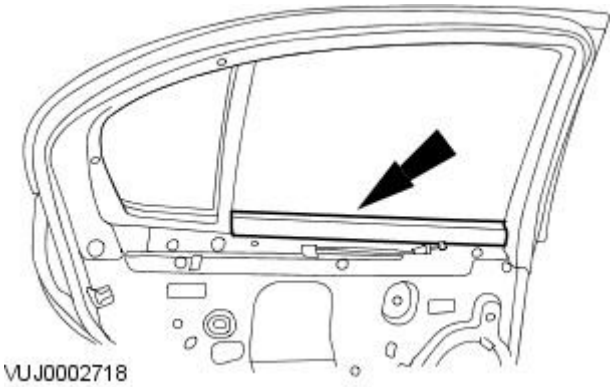

5. CAUTION: Do not bend or deform the exterior weatherstrip.

Remove the door exterior weatherstrip.

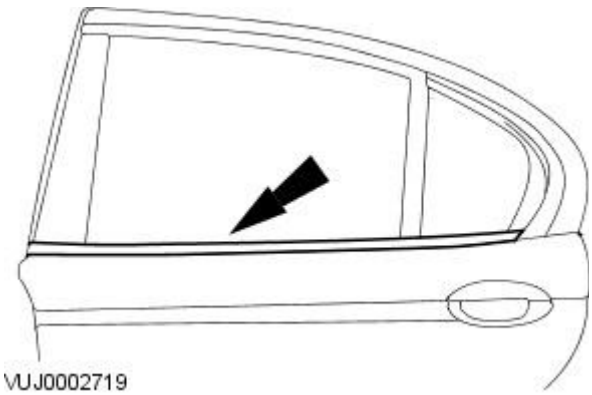

6. Detach the window glass aperture seal.

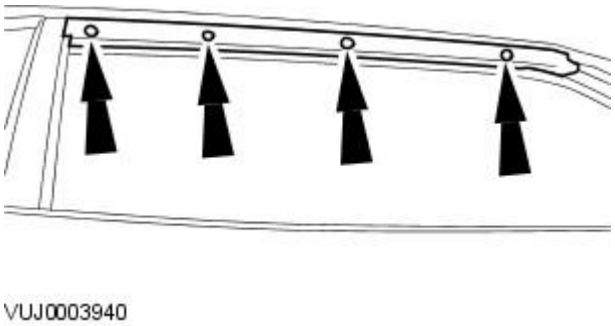

7. Remove and discard the rivets.

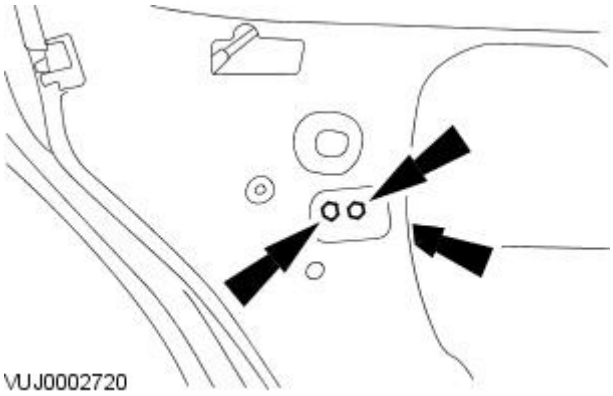

8. Detach the rear quarter window glass guide rail retaining bracket.

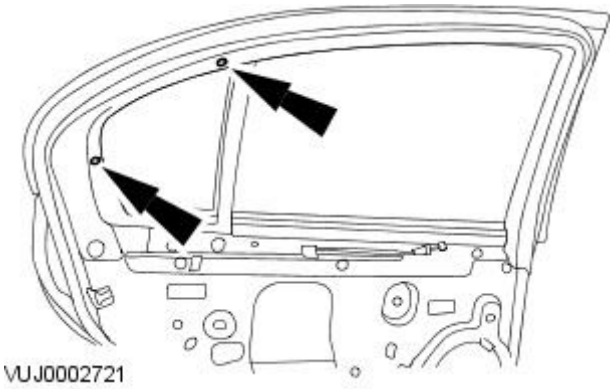

9. Remove the retaining screws.

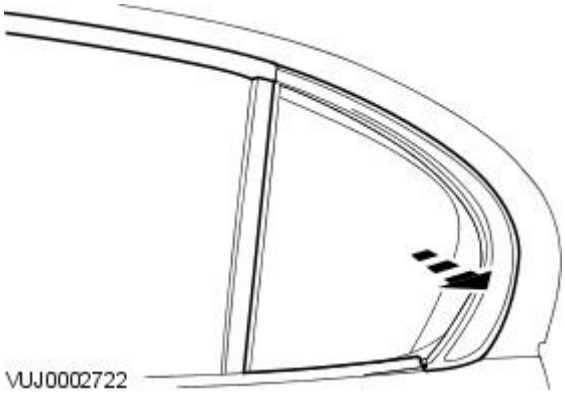

10. CAUTION: Use care when removing the rear quarter window glass. Failure to follow these instructions may result in damage to the window glass and the exterior trim.

Remove the rear quarter window glass.

11. Remove any Butyl adheasive from around the rear quarter window glass door aperature.

Installation

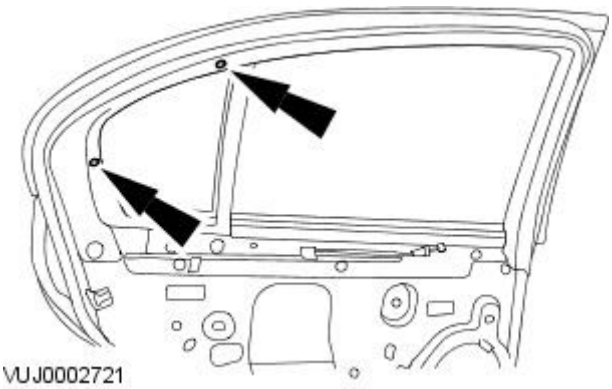

1. CAUTION: Use care when installing the rear quarter window glass. Failure to follow these instructions may result in damage to the window glass and the exterior trim.

• NOTE: When refitting the original rear quarter glass, apply new bead of Butyl adhesive.

To install, reverse the removal procedure.

- Tighten to 7 Nm.

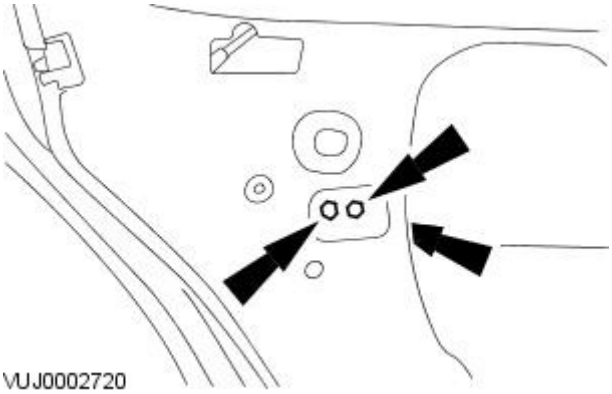

2. Tighten to 7 Nm.

Glass, Frames and Mechanisms - Rear Door Window Glass

Removal and Installation

Removal

1. Remove the rear quarter window glass. For additional information, refer to Window Glass—Rear Quarter.
2. Lower the door window glass until the pin is visible in the access hole.

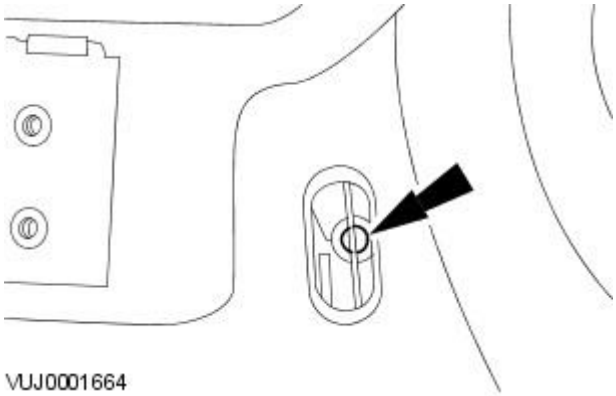

3. Reposition the rear window guide rail.

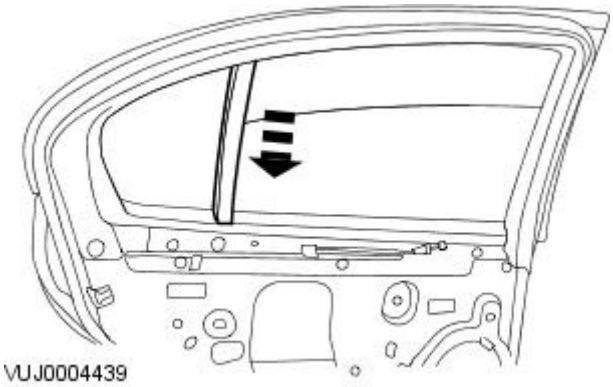

4. Detach the window glass from the regulator.
   1. Remove the pin.
   2. Remove the sleeve.
   3. Detach the window glass from the regulator.

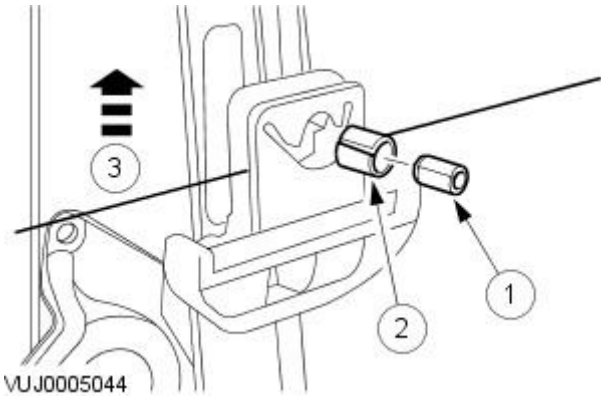

5. Remove the window glass.

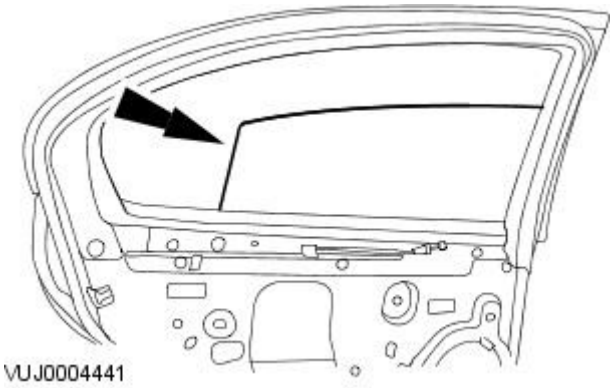

Installation

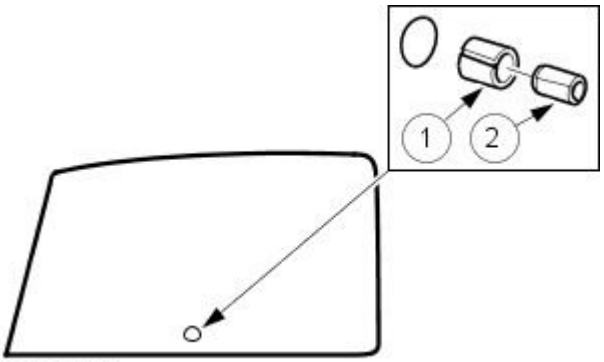

VUJ0004721

1. CAUTION: Use care when installing the sleeve and the pin into the window glass. Failure to follow these instructions may result in damage to the window glass.

Install the pin.

1. CAUTION: Make sure the sleeve is fitted central in the window glass.

1. Install the sleeve.

1. CAUTION: Make sure the sleeve stays central in the window glass.

2. Install the pin.

2. Install the window glass.

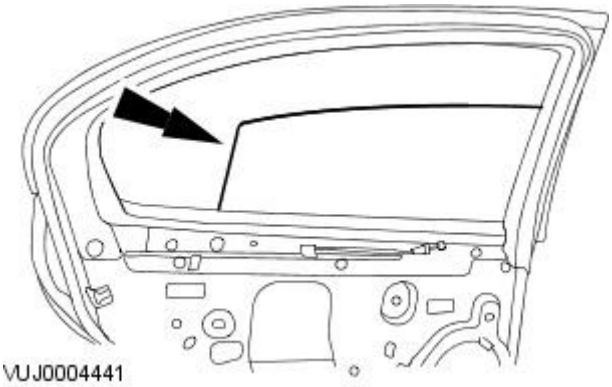
VUJ0004441

3. NOTE: Insert the glass into the regulator glass clamp and firmly pushed down. Check both sides of the clamp have snapped over the spacer bracket pin.

Attach the window glass into the regulator clamp.

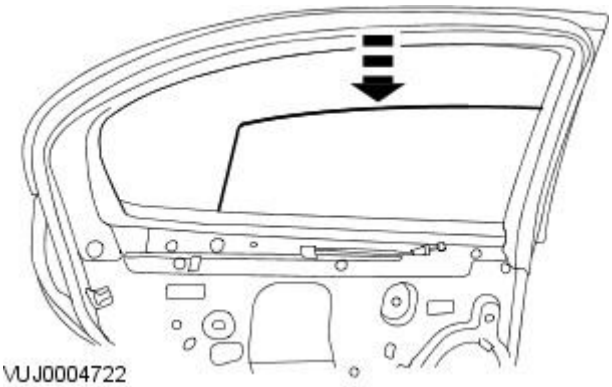
VUJ0004722

4. Reposition the rear window guide rail.

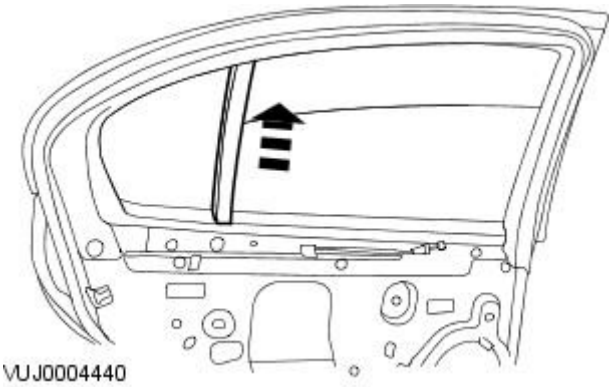
VUJ0004440

5. Install the rear quarter window glass. For additional information, refer to Window Glass—Rear Quarter.

Glass, Frames and Mechanisms - Rear Door Window Regulator

Removal and Installation

Removal

1. Remove the door trim panel.
For additional information, refer to Section 501-05 Interior Trim and Ornamentation.

2. Remove the rear speaker.
For additional information, refer to Section 415-03 Speakers.

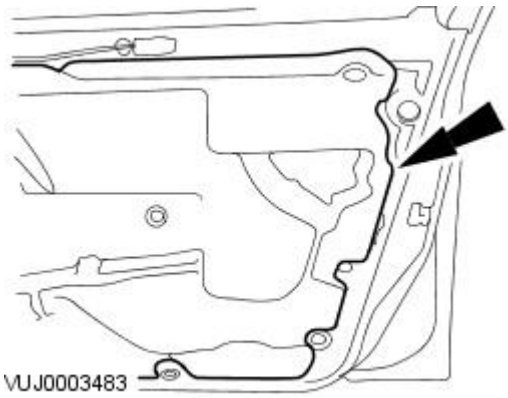

3. CAUTION: Do not touch the adhesive surface as rebonding will be impaired

Peel back the weathershield.

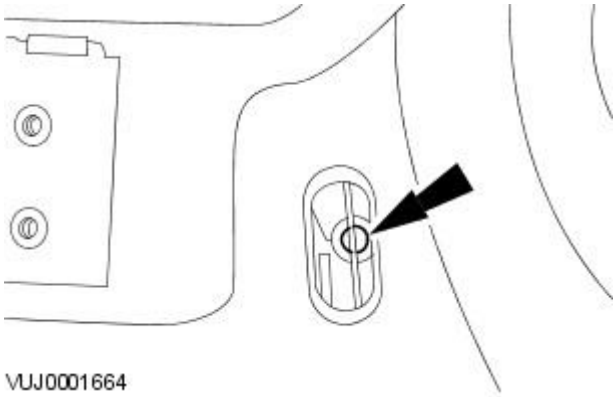

4. Lower the door window glass until the pin is visible in the access hole.

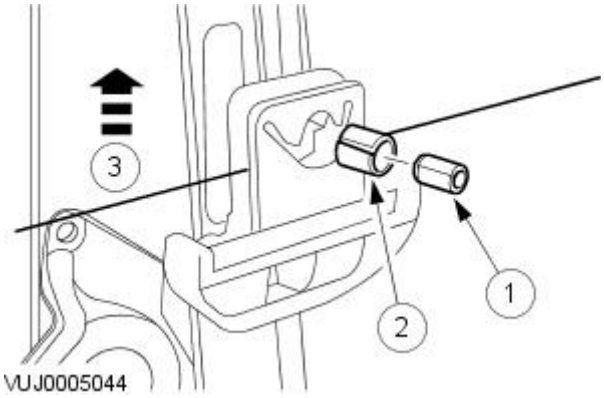

5. Detach the window glass from the regulator.

1. Remove the pin.
2. Remove the sleeve.
3. Detach the window glass from the regulator.

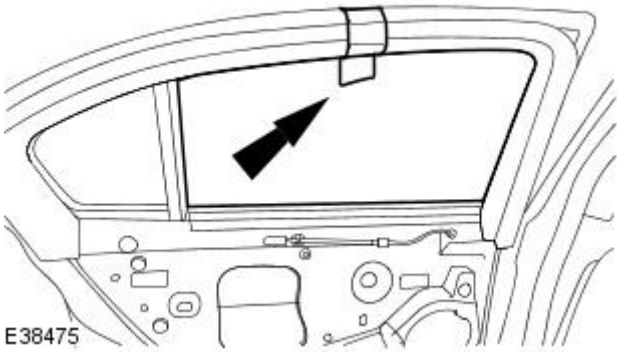

6. Secure window glass in the fully raised position.

- Apply suitable protective tape to the top of the window glass.

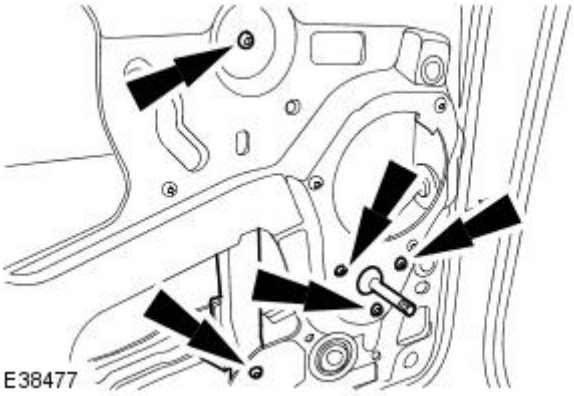

7. Remove the rear door window regulator.

Installation

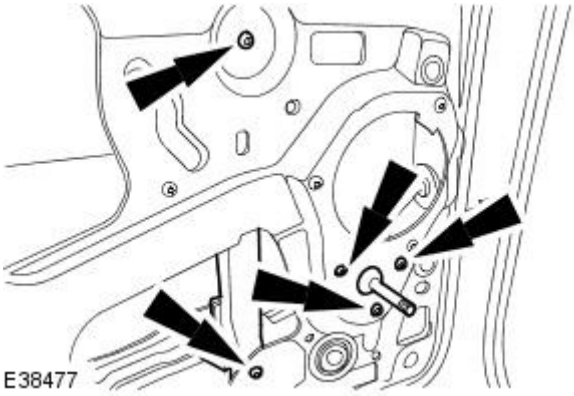

1. Install the rear door window regulator.

- Tighten to 7 Nm.

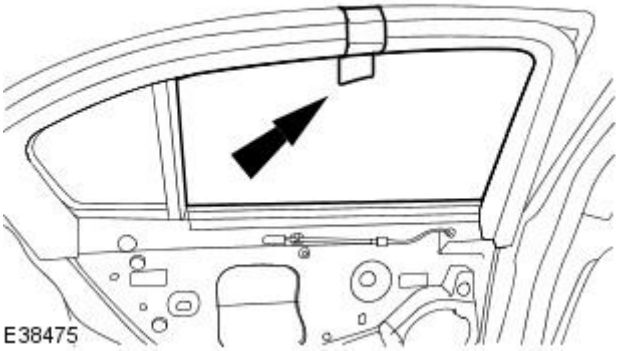

2. CAUTION: Support the window glass prior to removal of the protective tape.

Remove the protective tape from the top of the window glass.

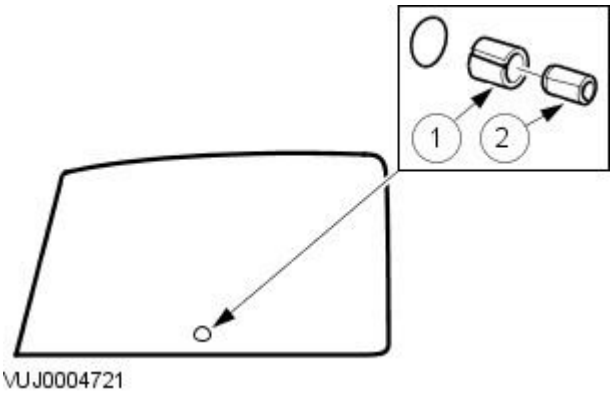

3. CAUTION: Use care when installing the sleeve and pin into the window glass. Failure to follow these instructions may result in damage to the window glass.

Install the pin.

3. CAUTION: Make sure the sleeve is fitted central in the window glass.

1. Install the sleeve.

3. CAUTION: Make sure the sleeve stays central in the window glass.

2. Install the pin.

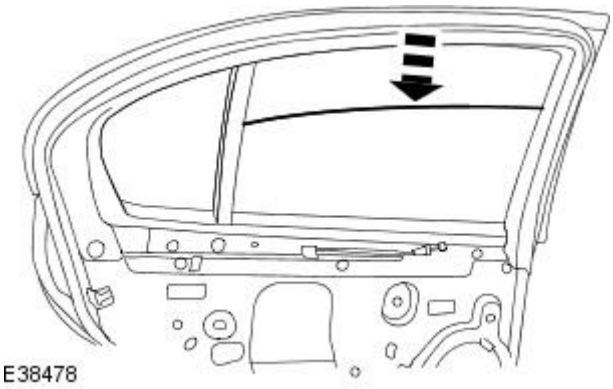

4. NOTE: Insert the glass into the regulator glass clamp and firmly pushed down. Check both sides of the clamp have snapped over the spacer bracket pin.

Attach the window glass into the regulator clamp.

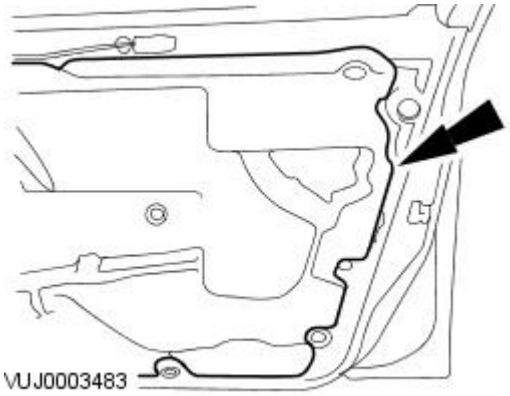

5. CAUTION: Do not touch the adhesive surface as rebonding will be impaired

Install the weathershield.

6. Install the rear door speaker.
For additional information, refer to Section 415-03 Speakers.

7. Install the door trim panel.
For additional information, refer to Section 501-05 Interior Trim and Ornamentation.

Glass, Frames and Mechanisms - Rear Door Window Regulator and Motor

Removal and Installation

Removal

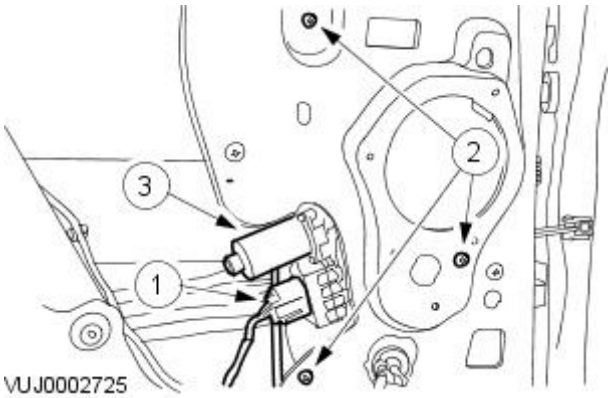

1. Remove the rear door window glass.
For additional information, refer to: Rear Door Window Glass (501-11 Glass, Frames and Mechanisms, Removal and Installation).

2. Remove the rear motor and window regulator.

1. Disconnect the electrical connector.
2. Remove the retaining screws.
3. Remove the rear motor and window regulator.

Installation

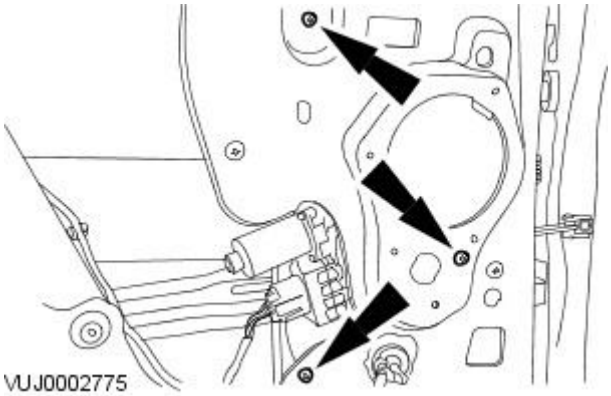

1. To install, reverse the removal procedure.

2. Tighten to 7 Nm.

Glass, Frames and Mechanisms - Rear Quarter Window Glass

Removal and Installation

Special Tool(s)	
BTB-WK9	Spray Bottle WK9
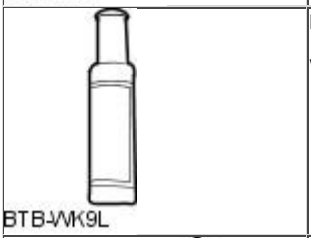 BTB-WK9L	Lubricant Concentrate WK9L
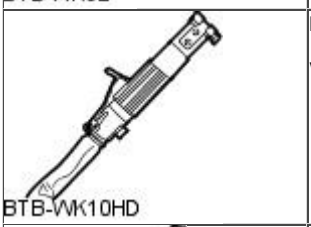 BTB-WK10HD	Power Cutting Tool WK10HD
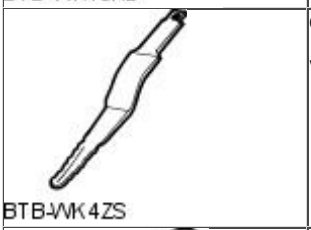 BTB-WK4ZS	Cutting Blade - Side WK4ZS
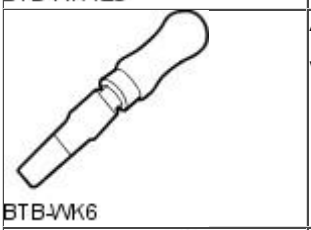 BTB-WK6	Adhesive Removal Blade - Body WK6
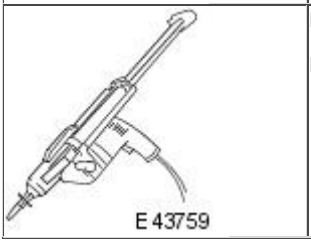 E43759	Betagun application gun Betagun 111

Removal

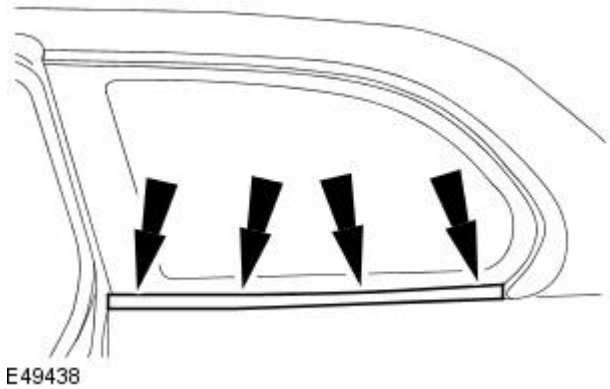
E49438

1. Remove the rear quarter window glass weatherstrip.

2. Remove the rear quarter window glass finisher trim.

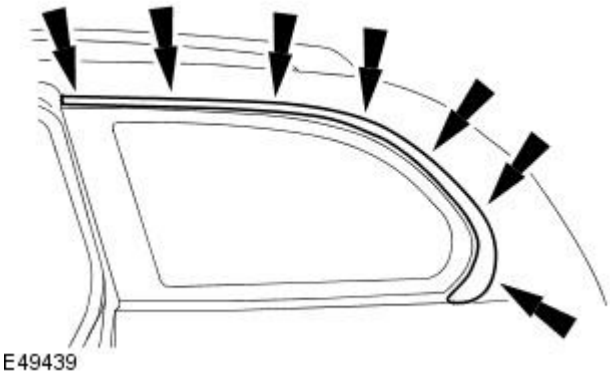

3. Remove the loadspace trim panel.
   For additional information, refer to: Loadspace Trim Panel (501-05 Interior Trim and Ornamentation, Removal and Installation).
4. Apply a suitable protective tape to the edge of the headliner above the rear quarter glass.
5. Dispense 20ml of WK9L lubricant into the WK9 spray bottle, fill the spray bottle with water and mix.
6. CAUTION: Make sure cutting lubricant does not contact any electrical components. Failure to follow this instruction may result in damage to the component.

   Apply cutting lubricant to the rear quarter window glass adhesive.
7. Install the cutting tool blade BTB-WK4ZS to the cutting tool BTB-WK10HD.
8. WARNING: When removing the rear quarter window glass, personal protection must be worn. Failure to follow this instruction may result in personal injury.

• CAUTIONS:

Make sure the rear quarter glass edge seal is not damaged when cutting the rear quarter window glass adhesive.

Support the rear quarter window glass when cutting the rear quarter window glass adhesive.

• NOTE: Apply cutting lubricant to the cutting tool frequently throughout the cutting process.

   Using the special tool cut through the rear quarter window glass adhesive.
9. Remove the rear quarter window glass.

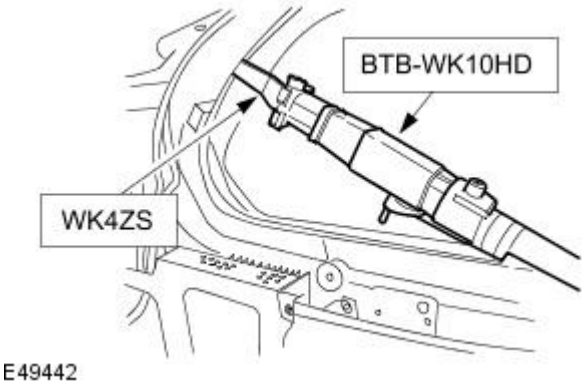

Installation

1. WARNINGS:

If the rear quarter window glass is being installed at a temperature of 23°C (73°F) or above make sure the vehicle is not driven for at least 1 hour after installation.

If the rear quarter window glass is being installed at a temperature of 11°C (52°F) make sure the vehicle is not driven for at least 1.5 hours after installation.

If the rear quarter window glass is being installed at a temperature of 5°C (41°F) make sure the vehicle is not driven for at least 2 hours after installation.

If the rear quarter window glass is being installed at a temperature below 5°C (41°F) use heat and make sure the windshield glass adhesive has set before the vehicle is driven.

   Using the special tool, remove any residual adhesive from the body aperture.

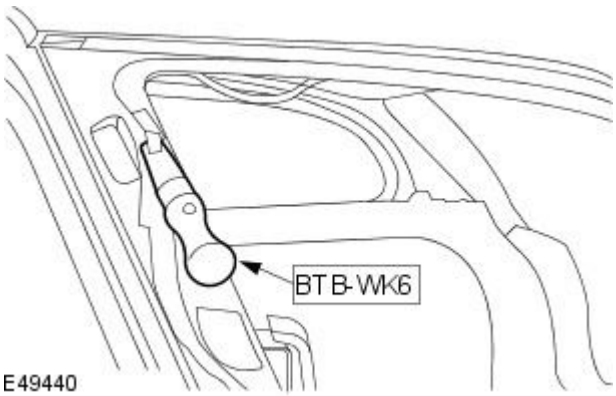

2. If the original rear quarter window glass is to be installed remove any residual adhesive from the rear quarter window glass using the special tool.

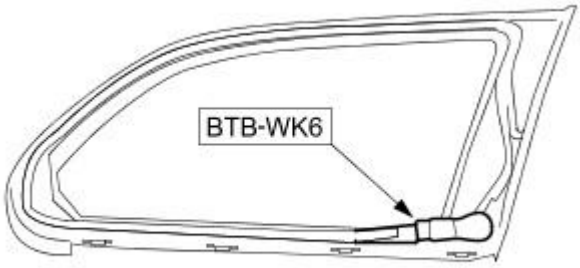

E49441

3. Thoroughly clean rear quarter window glass surface using Betawipe spirit.

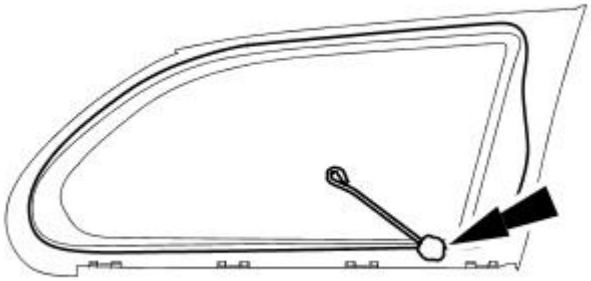

E49523

4. Thoroughly clean the mating face of the body using Betawipe spirit.

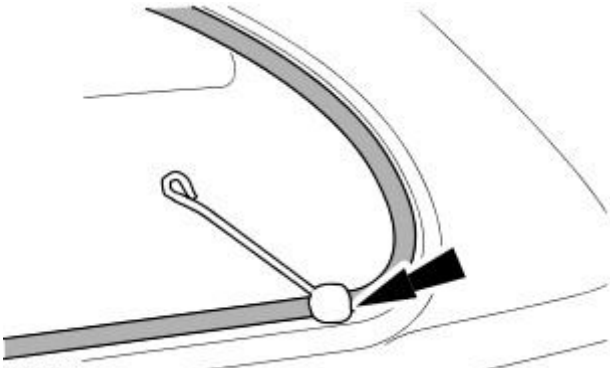

E49524

5. Apply primer to the mating face of the glass.

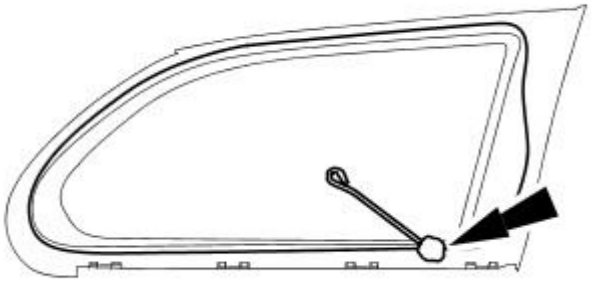

E49523

6. Apply primer to the mating face of the body.

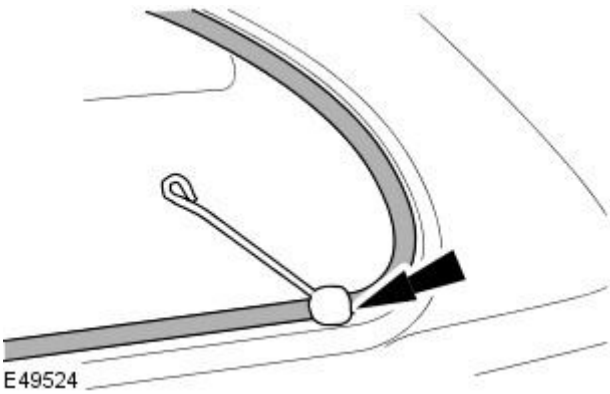

E49524

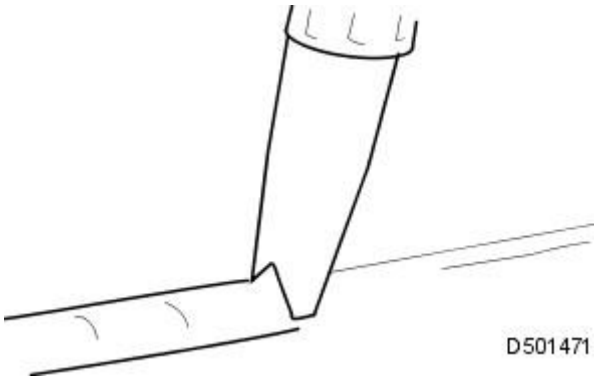

7. Cut the nozzle of the JLM20452 glass bonding adhesive to achieve a triangular section bead 8 mm (0.32 in) wide by 10 mm (0.4 in) high.

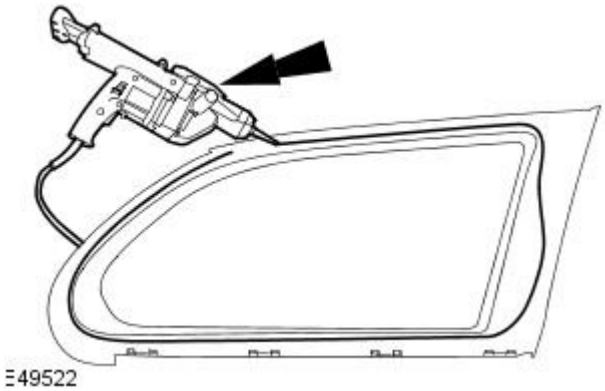

8. Using the special tool, apply a uniform bead of adhesive to the rear quarter window glass edge commencing at the bottom center and overlapping the ends approximately 14 mm (0.56 in).

9. CAUTIONS:

When installing the rear quarter window glass, do not strike it in any way as this will crack the rear quarter window glass.

Make sure the rear quarter window glass does not move out of position in the body aperture.

Install the rear quarter window glass into the aperture and press firmly in to place.

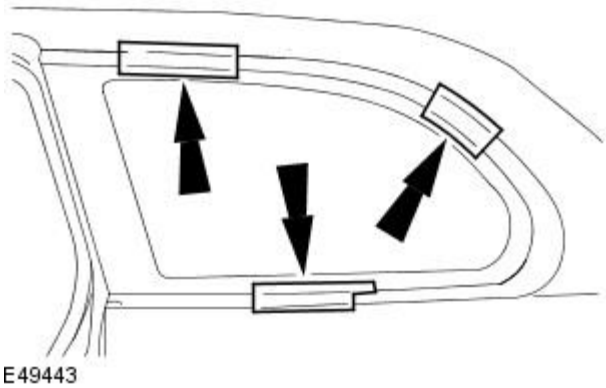

10. CAUTION: Make sure the rear quarter window glass does not move out of position in the rear quarter window glass aperture.

Apply suitable tape to the rear quarter window glass.

11. Remove protective tape from the edge of the headliner.

12. Install the loadspace trim panel.
For additional information, refer to: Loadspace Trim Panel (501-05 Interior Trim and Ornamentation, Removal and Installation).

13. NOTE: Make sure the rear quarter window glass adhesive has cured before installing the rear quarter window glass finisher trim.

Install the rear quarter window glass finisher trim.

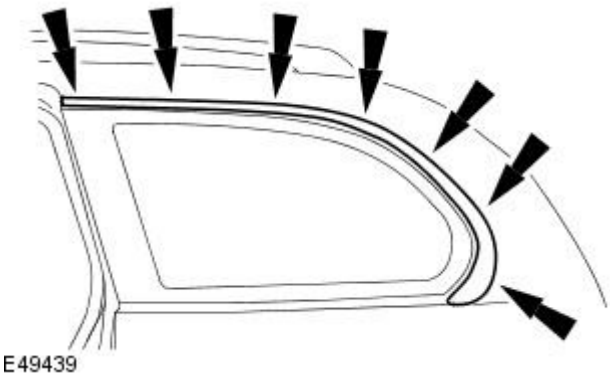

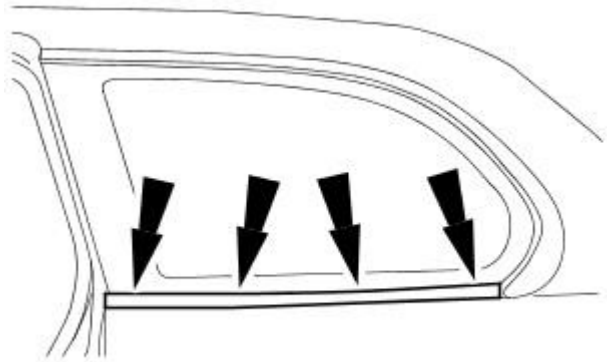

14. NOTE: Make sure the rear quarter window glass adhesive has set before installing the rear quarter window glass exterior weatherstrip.

Install the rear quarter window glass weatherstrip.

Glass, Frames and Mechanisms - Rear Window Glass Using Cheese Wire

Removal and Installation

Removal

1. Remove the high level stop lamp. For additional information, refer to Section 417-01 Exterior Lighting.
2. Detach the seat belt reel trim panels.

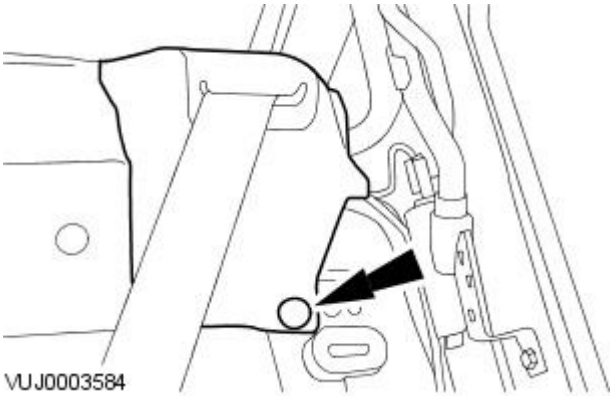

3. Remove the rear seat backrest latch covers.

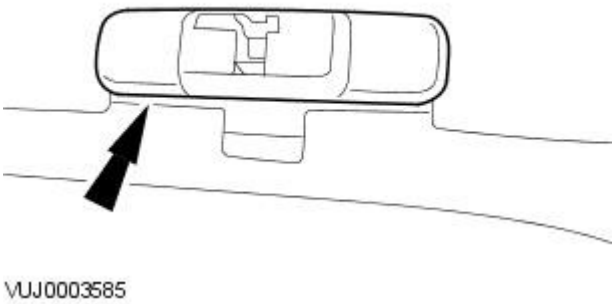

4. Detach the parcel shelf trim panel.

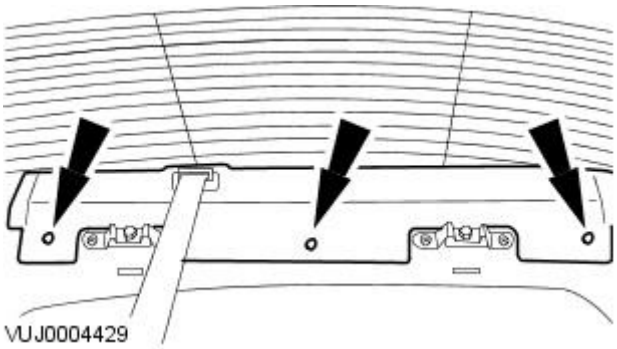

5. Disconnect the electrical connectors.

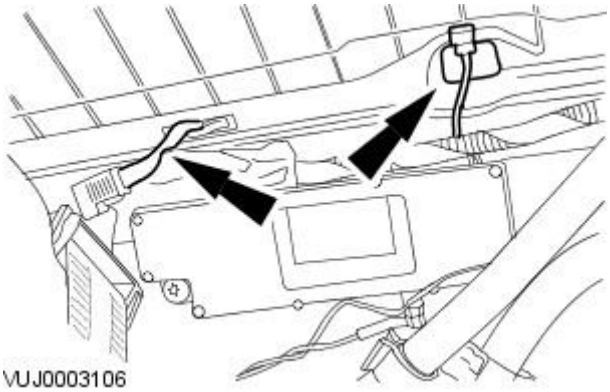

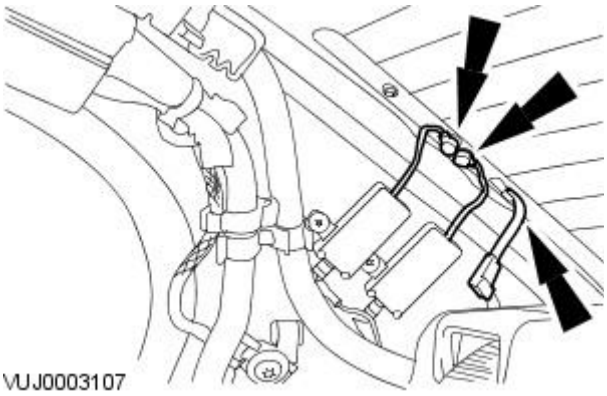

6. Disconnect the electrical connectors.

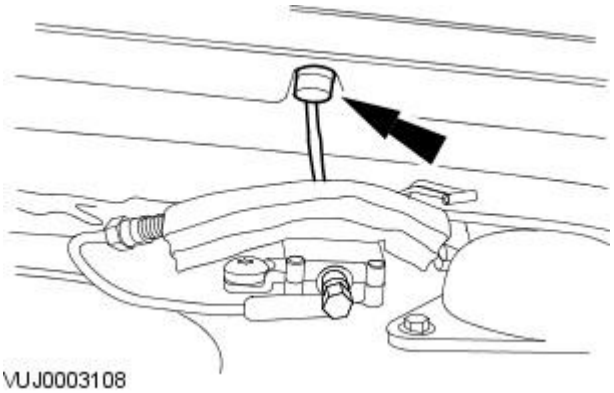

7. Disconnect the electrical connector.

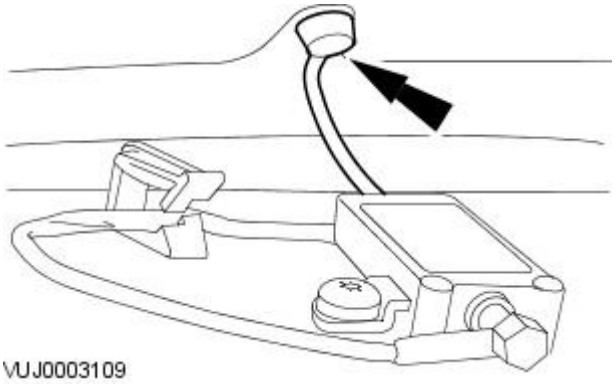

8. Disconnect the electrical connector.

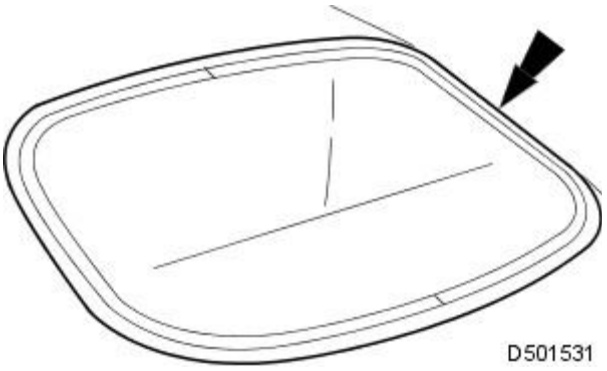

9. Apply suitable protective tape around the windshield glass aperture.

10. Place a protective sheet over the parcel shelf and place a protective board over the sheet.

11. Apply suitable protective tape to inner edge of the roof panel.

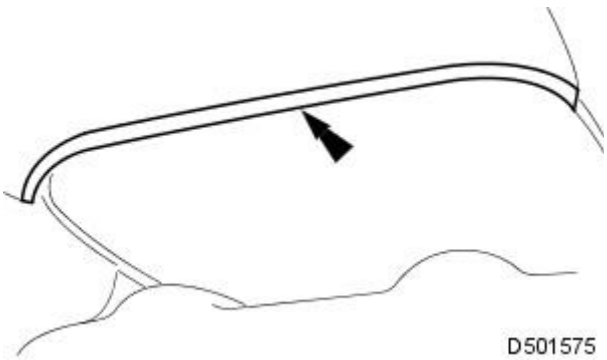

12. Prepare the cheese wire and the cutting handle.

- Position the cutting handle central tube fully upwards in the handle.
- Cut a suitable length of cheese wire and pass one end through the handle tube and the locating aperture.
- Move the cutting handle central tube downwards to secure the cheese wire.

13. Using a suitable long bladed tool, penetrate the windshield glass adhesive.

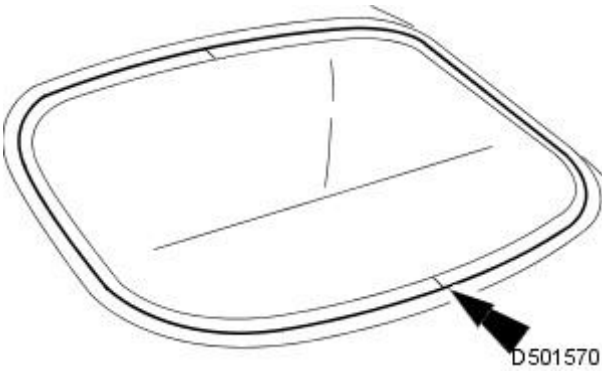

14. Remove the tool, pass the free end of the cheese wire through the penetration and install the second cutting handle.

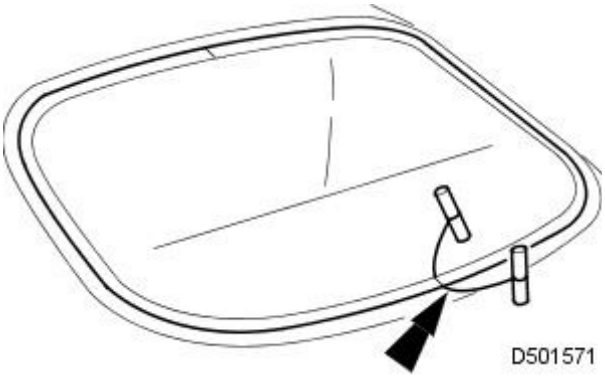

15. With assistance and exercising care to avoid damaging the paintwork, cut around the windshield glass commencing downwards and along the bottom.

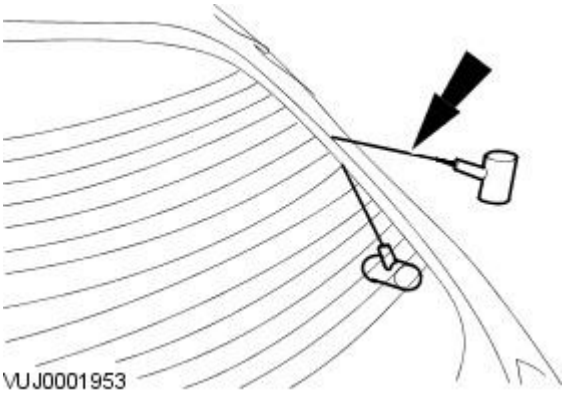

16. With assistance remove the windshield glass.

- Attach the lifting handles to the windshield glass.

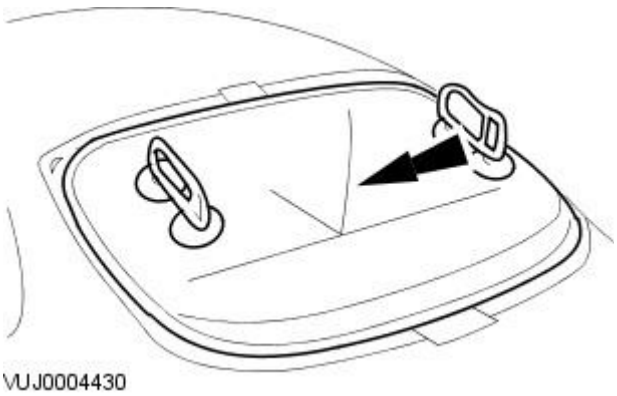

17. Remove the lifting handles from the windshield glass.

18. Remove the cheese wire cutting tool from the windshield glass aperture, separate the handles by moving center tubes upwards and discard the cheese wire.

19. Apply suitable protective tape to the windshield glass aperture.

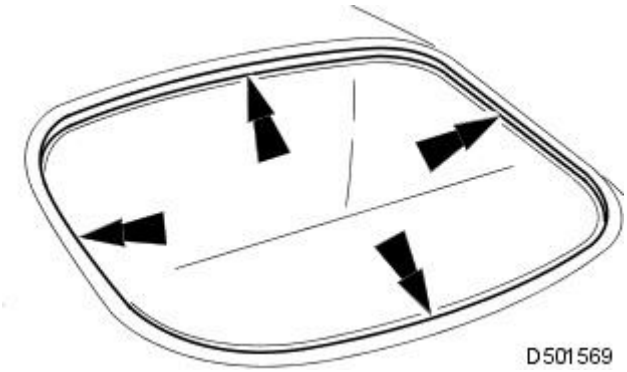

20. NOTE: To aid bonding of a new windshield glass, make sure at least 1 mm (0.3 in) of residual adhesive remains on the body flange.

Using a suitable tool remove residual adhesive from the body flange.

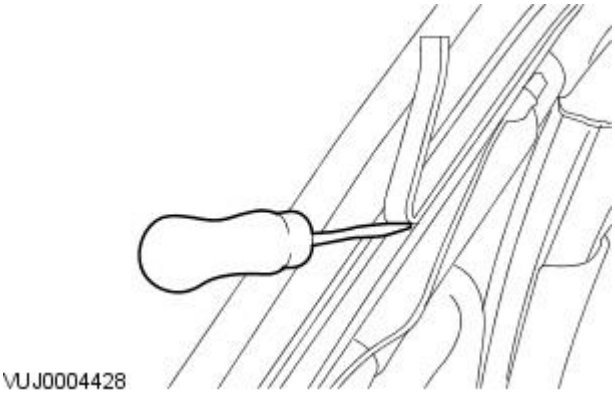

21. Remove the protective tape from the windshield glass aperture.

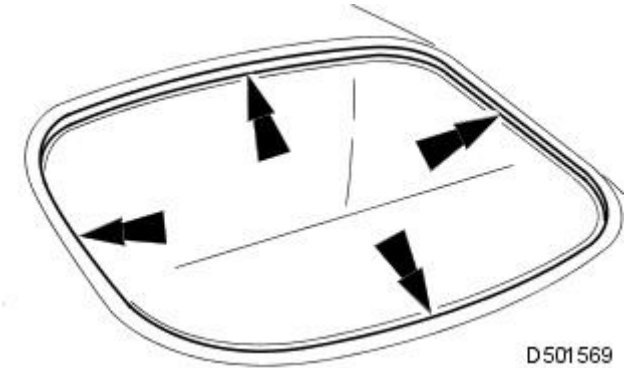

Installation

1. Make sure the new windshield glass surface is clean using Betawipe spirit.

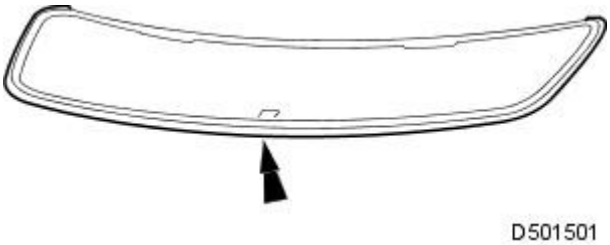

2. Apply glass primer to the mating face of the windshield glass.

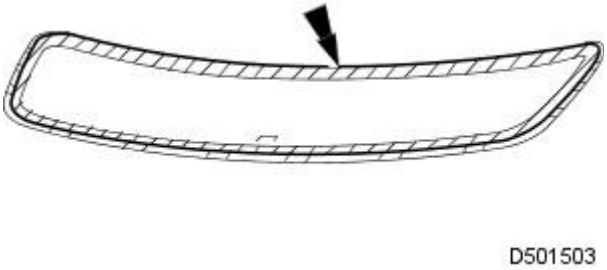

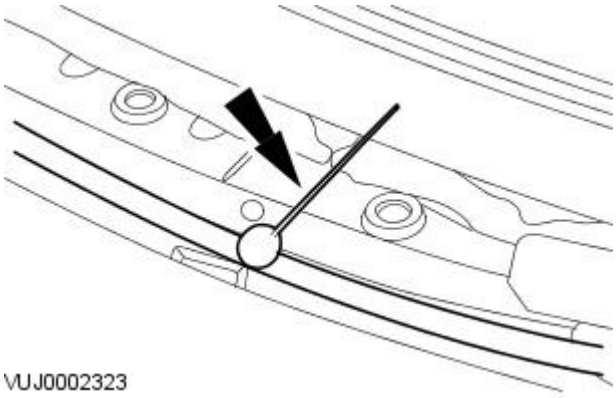

3. Apply glass primer to the mating face of the body flange.

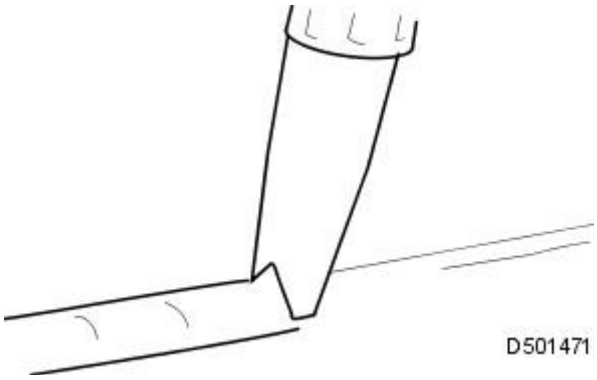

4. Cut the adhesive nozzle to achieve a triangular section bead 8 mm (0.31in) wide by 13 mm (0.51 in) high.

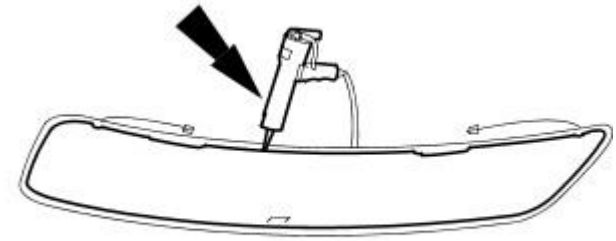

5. NOTE: Apply windshield adhesive WSS-M2G379-A6A or equivalent meeting Jaguar specification around the windshield glass edge.

Using a suitable pneumatic application gun, apply a uniform bead of adhesive to the windshield glass edge commencing at the bottom center and overlapping the ends approximately 14 mm (0.55 in).

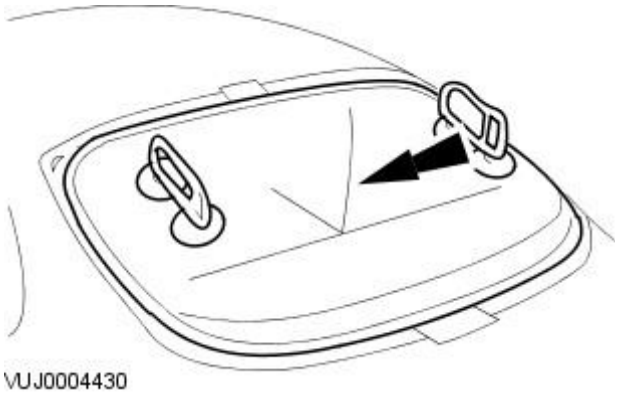

6. WARNINGS:

If the windshield glass is being installed at 23°C (73°F) or above make sure the vehicle is not driven for at least 1 hour after installation.

If the windshield glass is being installed at a temperature of 11°C (52°F) to 23°C (73°F) make sure the vehicle is not driven for at least 1.5 hours after installation.

If the windshield glass is being installed at a temperature of 5°C (41°F) to 11°C (52°F) make sure the vehicle is not driven for at least 2 hours after installation.

If the windshield glass is being installed at a temperature below 5°C (41°F) use heat and make sure the windshield glass adhesive has set before the vehicle is driven.

CAUTION: When installing the windshield glass, do not strike it in any way as this will crack the glass.

Install the lifting handles and with assistance, carefully position the windshield glass in the aperture.

- Align the windshield glass and press firmly into place.
- Remove the lifting handles.

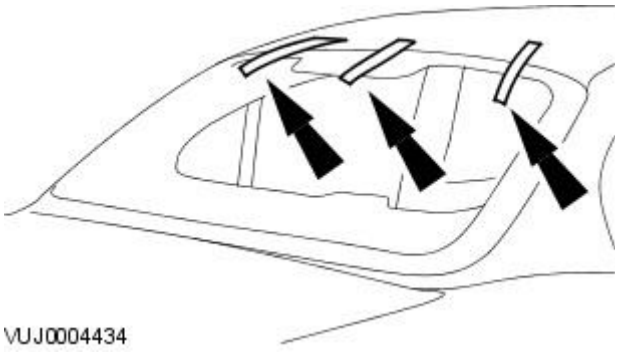

7. CAUTION: Make sure the windshield glass does not move out of position in the windshield glass aperture.

Apply suitable protective tape to the top of the windshield glass.

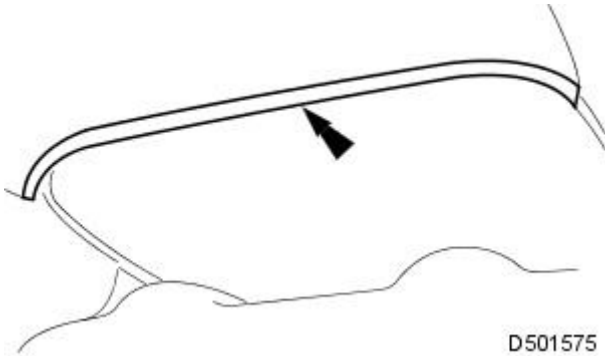

8. Remove the tape from the inner edge of the roof panel.

9. Remove the protective sheet and the protective board from the parcel shelf.

10. Remove the protective tape from around the windshield glass aperture.

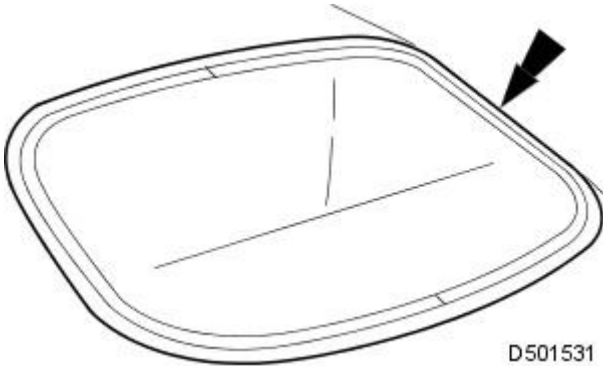

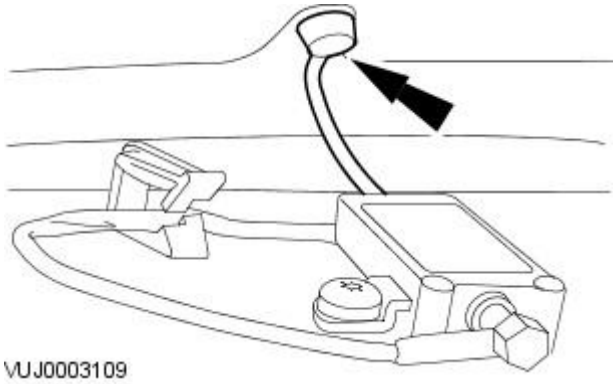

11. CAUTION: Do not connect the electrical connector for at least 1 hour after installation of the windshield glass. Failure to follow these instructions may result in damage to the windshield glass adhesive.

Connect the electrical connector.

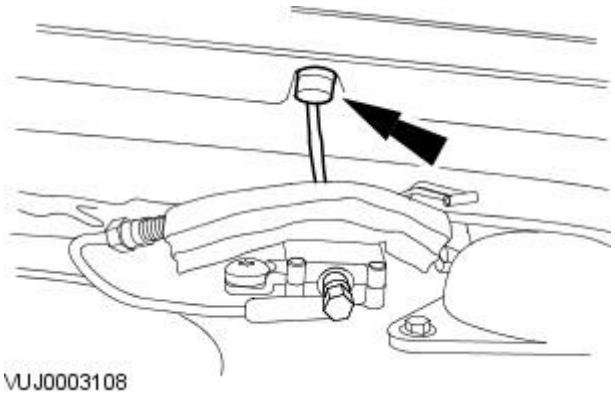

12. CAUTION: Do not connect the electrical connector for at least 1 hour after installation of the windshield glass. Failure to follow these instructions may result in damage to the windshield glass adhesive.

Connect the electrical connector.

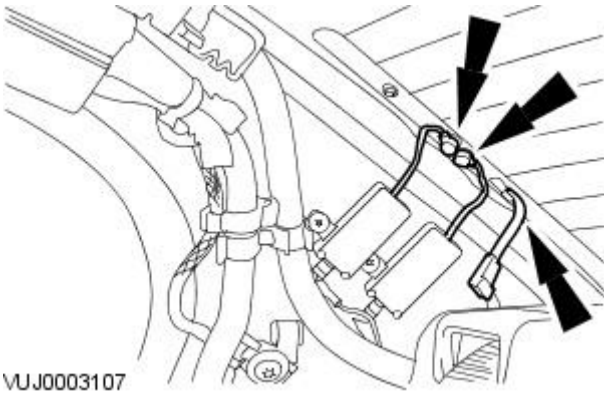

13. CAUTION: Do not connect the electrical connectors for at least 1 hour after installation of the windshield glass. Failure to follow these instructions may result in damage to the windshield glass adhesive.

Connect the electrical connectors.

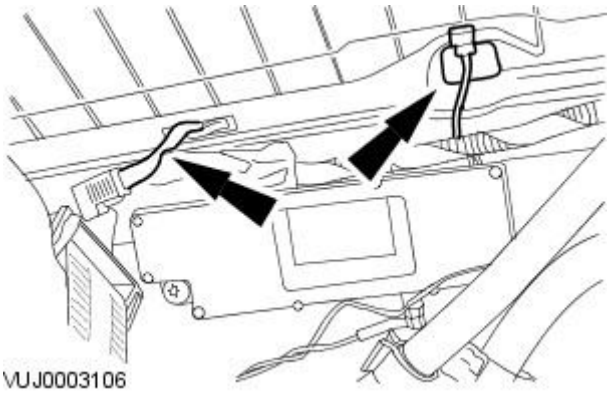

14. CAUTION: Do not connect the electrical connectors for at least 1 hour after installation of the windshield glass. Failure to follow these instructions may result in damage to the windshield glass adhesive.

Connect the electrical connectors.

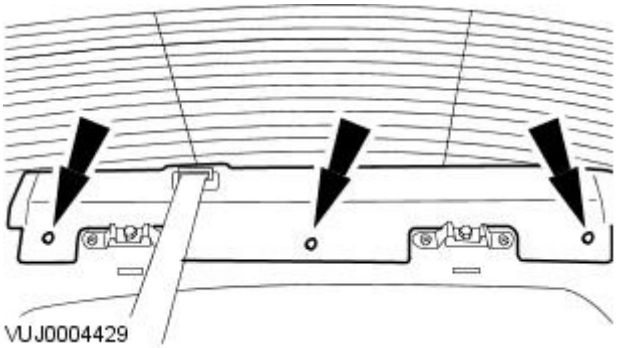

15. Attach the parcel shelf trim panel.

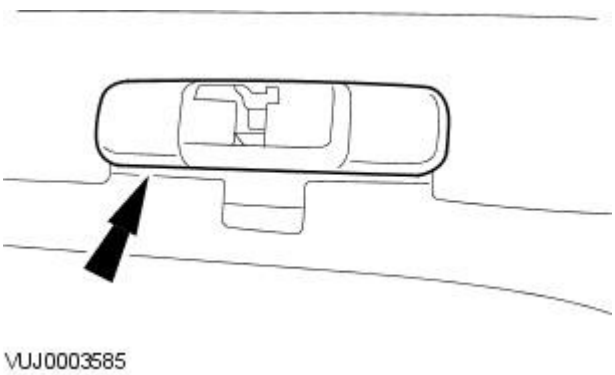

16. Install the rear seat backrest latch covers.

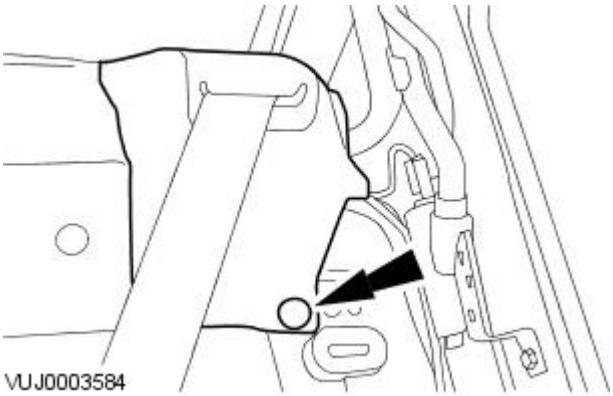

17. Attach the seat belt reel trim panels.

18. Install the high level stop lamp. For additional information, refer to Section 417-01 Exterior Lighting.

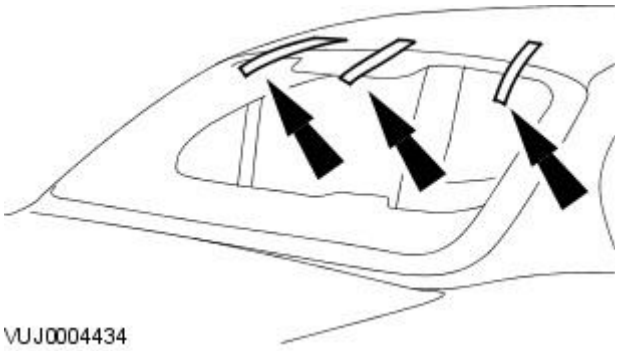

19. CAUTION: Make sure the windshield glass adhesive is set before removing the protective tape.

Remove the protective tape from the top of the windshield glass.

Glass, Frames and Mechanisms - Rear Window Glass Using Cutting Tool

Removal and Installation

Special Tool(s)	
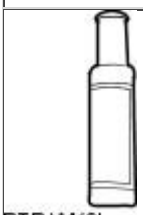 BTB-WK9L	Lubricant concentrate BTB-WK9L
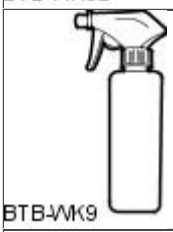 BTB-WK9	Spray bottle BTB-WK9
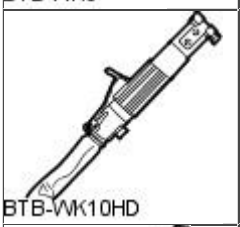 BTB-WK10HD	Cutting tool BTB-WK10HD
BTB-WK24ZS	Serrated general purpose 'Z' cutting blade BTB-WK24ZSC
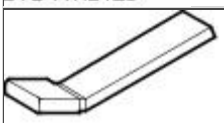 BTBWK11E	Cutting blade controller arm BTB-WK11B
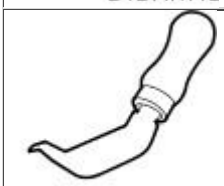 BTB-WK27	Reverse powered cold knife blade cutting tool BTB-WK27RM
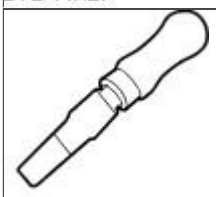 BTB-WK6	Pinchweld scraper blade BTB-WK6

Removal

1. Remove the high level stop lamp. For additional information, refer to Section 417-01 Exterior Lighting.
2. Detach the seat belt reel trim panels.

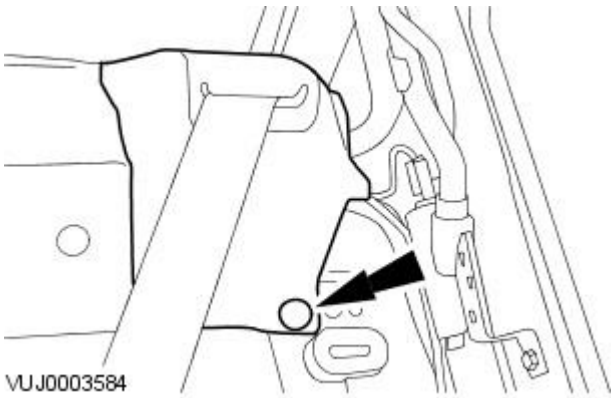

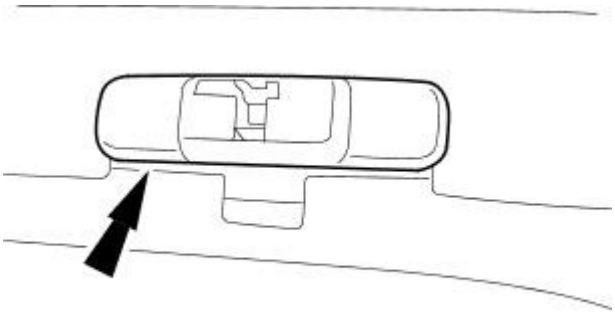

VUJ0003585

3. Remove the rear seat backrest latch covers.

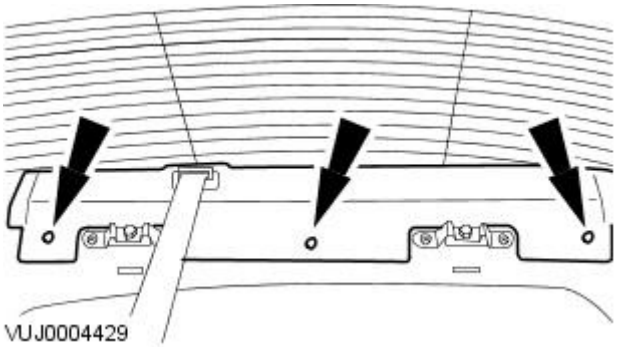

VUJ0004429

4. Detach the parcel shelf trim panel.

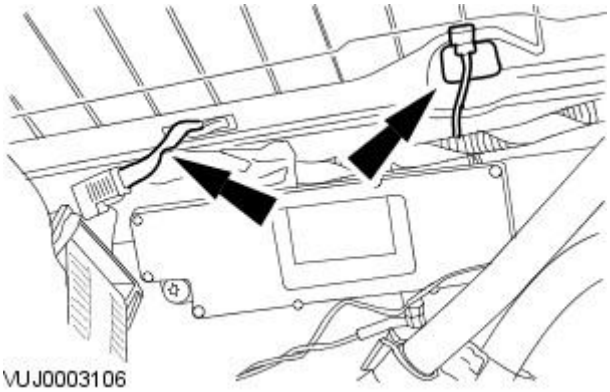

VUJ0003106

5. Disconnect the electrical connectors.

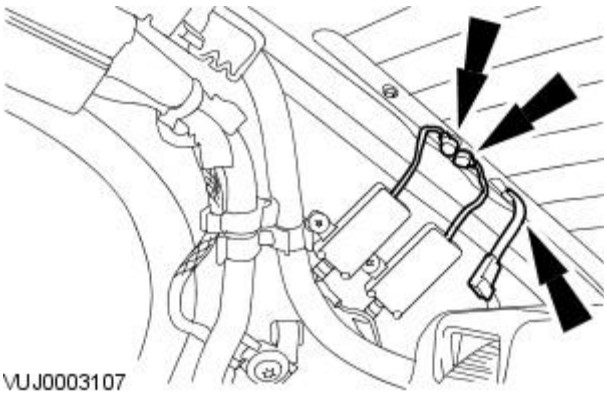

VUJ0003107

6. Disconnect the electrical connectors.

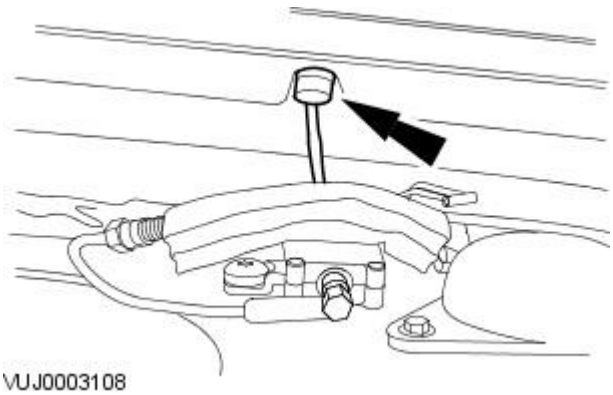

VUJ0003108

7. Disconnect the electrical connector.

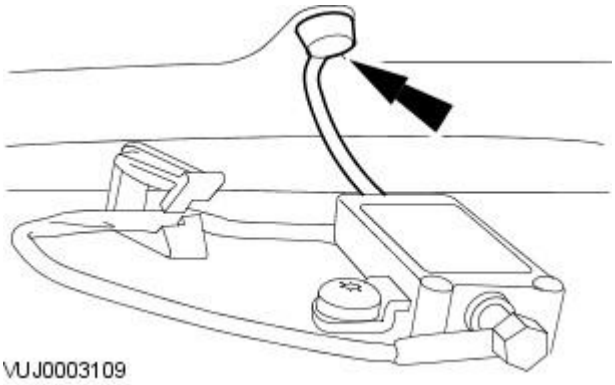

8. Disconnect the electrical connector.

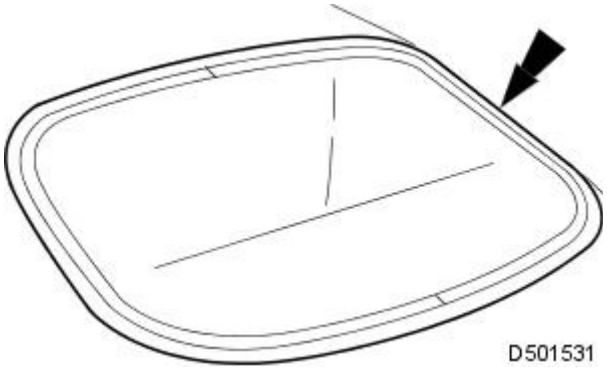

9. Apply suitable protective tape around the windshield glass aperture.

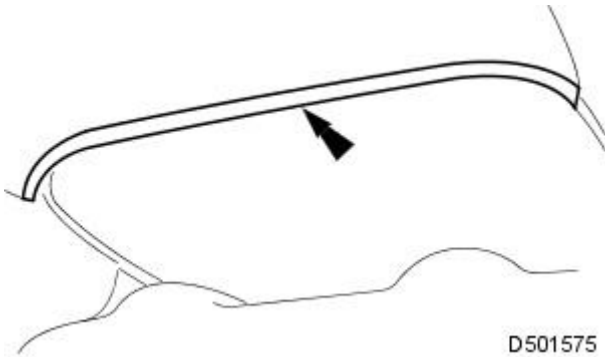

10. Place a protective sheet over the parcel shelf and place a protective board over the sheet.

11. Apply suitable protective tape to inner edge of the roof panel.

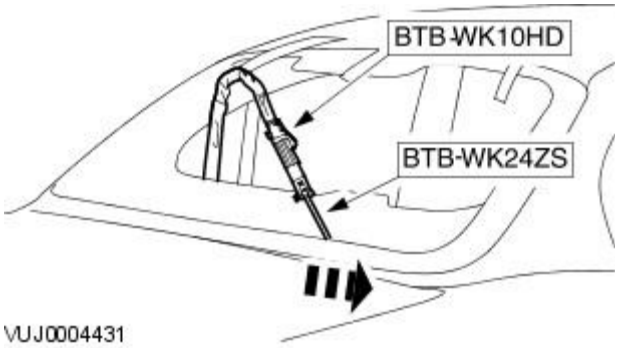

12. Apply cutting lubricant to the lower part of the inner windshield glass adhesive.

13. Install the cutting tool blade BTB-WK24ZS to the cutting tool BTB-WK10HD.

14. Using the cutting tool cut through the lower windshield glass adhesive.

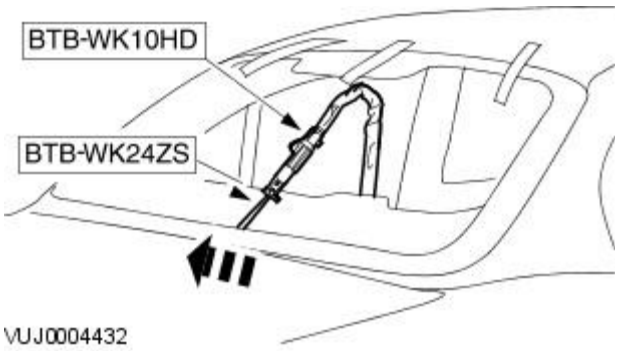

15. Using the cutting tool cut through the lower windshield glass adhesive.

16. Apply cutting lubricant to both sides of the inner C-pillar windshield glass adhesive.

17. Install the cutting tool controller arm BTB-WK11B to the cutting tool BTB-WK10HD.

- Set the cutting controller arm to 45 mm.

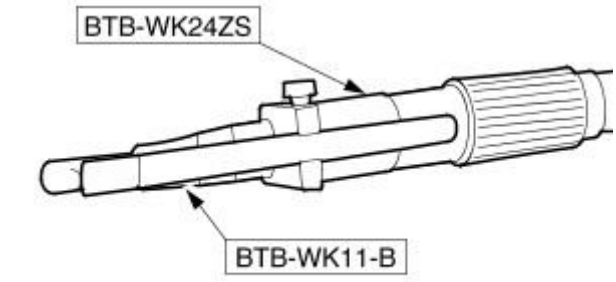

VUJ0004423

18. NOTE: Left-hand shown, right-hand similar.

• NOTE: Start cutting the windshield glass adhesive from the top of the C-piller downwards.

Using the cutting tool cut through both sides of the inner C-pillar windshield glass adhesive.

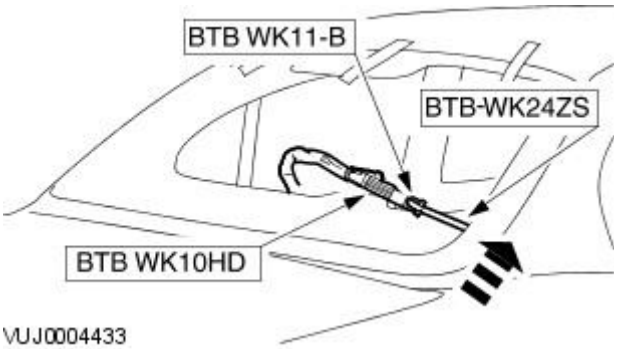

VUJ0004433

19. Apply cutting lubricant to the top of the inner windshield glass adhesive.

20. Set the cutting controller arm to 15 mm.

21. Apply suitable protective tape to the top of the windshield glass.

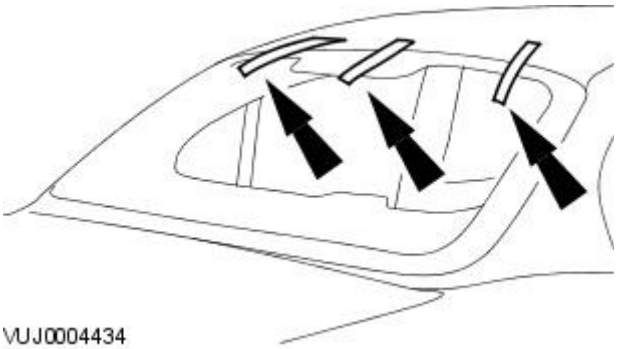

VUJ0004434

22. NOTE: Start cutting from either corner of the windshield glass into the center of the windshield glass and continue the cut all the way through to the other corner of the windshield glass. Do not cut from each corner of the windshield glass into the center of the windshield glass as the pressure on the center of the windshield glass could cause breakage.

Using the special tool cut through the top of the inner windshield glass adhesive.

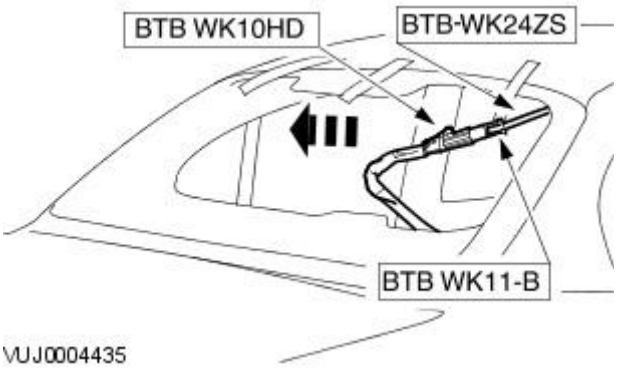

VUJ0004435

23. NOTE: Right-hand shown, left-hand similar.

Using the special tool cut through any remaining adhesive on the C-pillars.

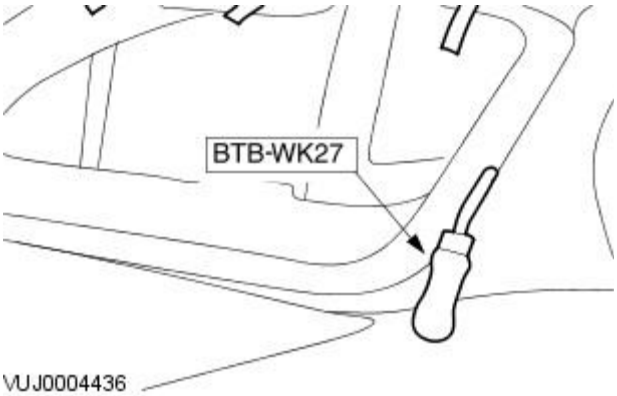

VUJ0004436

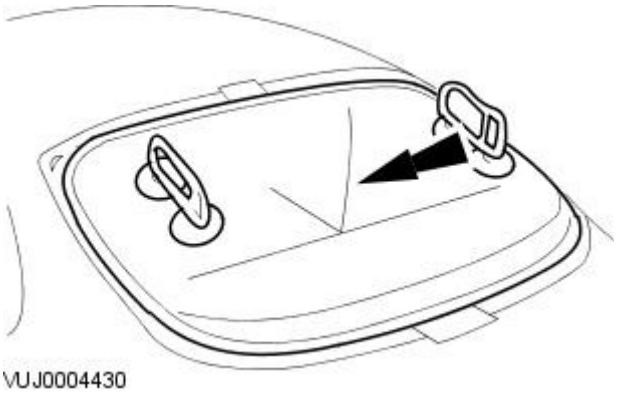

24. Remove the windshield glass.

- Attach lifting handles to the windshield glass.

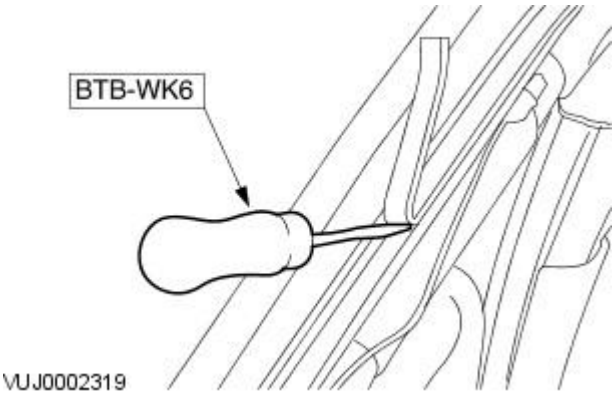

25. NOTE: To aid bonding of a new windshield glass, make sure at least 1 mm (0.3 in) of residual adhesive remains on the body flange.

Using the special tool remove the residual adhesive from the body flange.

Installation

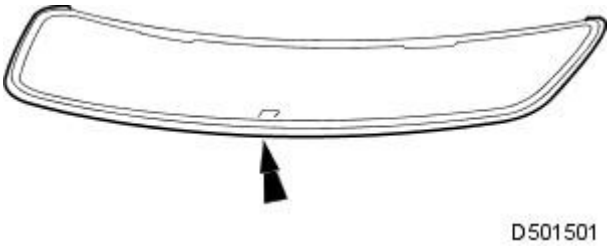

1. Make sure the new windshield glass surface is clean using Betawipe spirit.

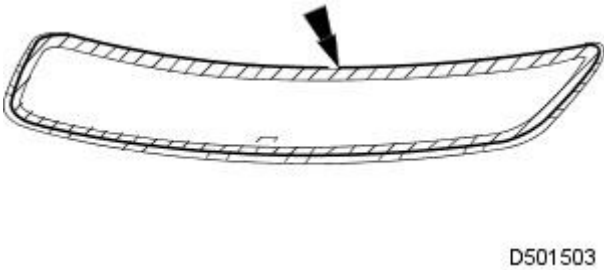

2. Apply glass primer to the mating face of the windshield glass.

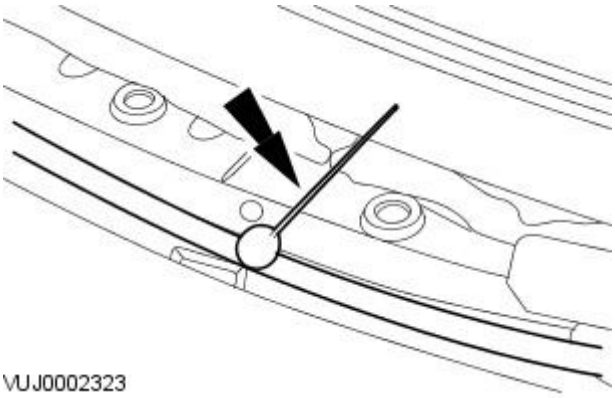

3. Apply glass primer to the mating face of the body flange.

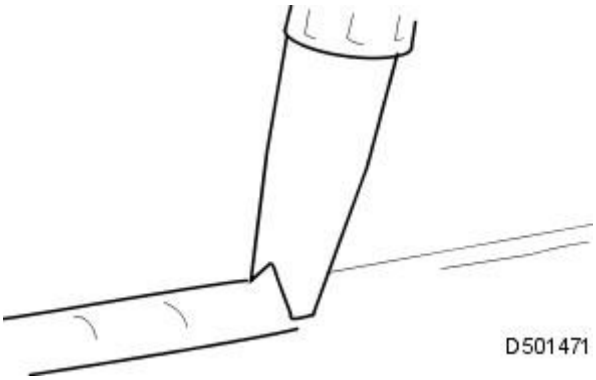

4. Cut the adhesive nozzle to achieve a triangular section bead 8 mm (0.31in) wide by 13 mm (0.51 in) high.

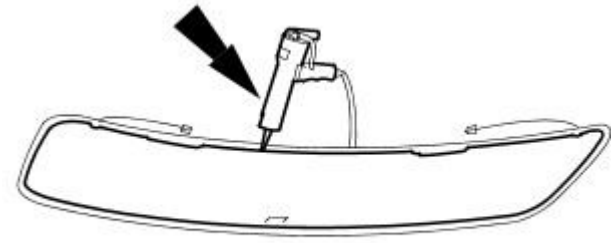

5. NOTE: Apply windshield adhesive WSS-M2G379-A6A or equivalent meeting Jaguar specification around the windshield glass edge.

Using a suitable pneumatic application gun, apply a uniform bead of adhesive to the windshield glass edge commencing at the bottom center and overlapping the ends approximately 14 mm (0.55 in).

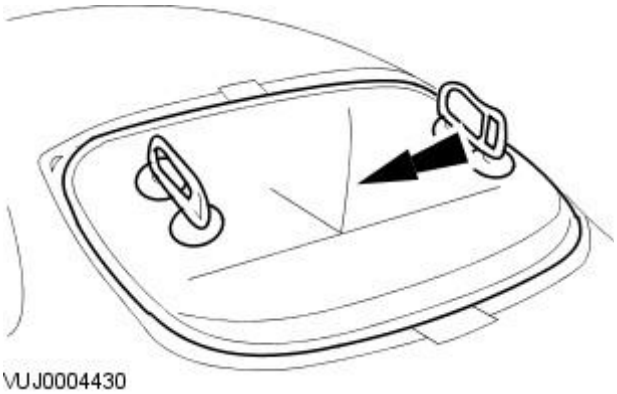

6. WARNINGS:

If the windshield glass is being installed at 23 °C (73 °F) or above make sure the vehicle is not driven for at least 1 hour after installation.

If the windshield glass is being installed at a temperature of 11 °C (52 °F) to 23 °C (73 °F) make sure the vehicle is not driven for at least 1.5 hours after installation.

If the windshield glass is being installed at a temperature of 5 °C (41 °F) to 11 °C (52 °F) make sure the vehicle is not driven for at least 2 hours after installation.

If the windshield glass is being installed at a temperature below 5 °C (41 °F) use heat and make sure the windshield glass adhesive has set before the vehicle is driven.

CAUTION: When installing the windshield glass, do not strike it in any way as this will crack the glass.

Install the lifting handles and with assistance, carefully position the windshield glass in the aperture.

- Align the windshield glass and press firmly into place.
- Remove the lifting handles.

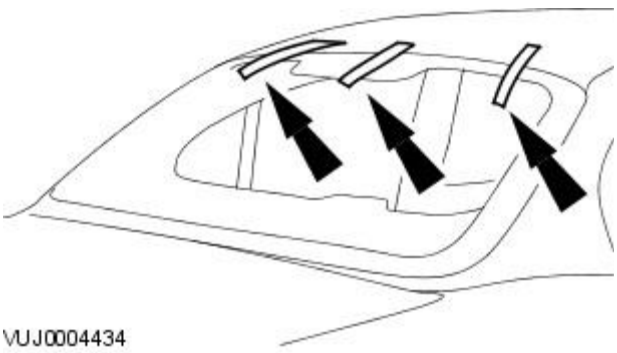

7. CAUTION: Make sure the windshield glass does not move out of position in the windshield glass aperture.

Apply suitable protective tape to the top of the windshield glass.

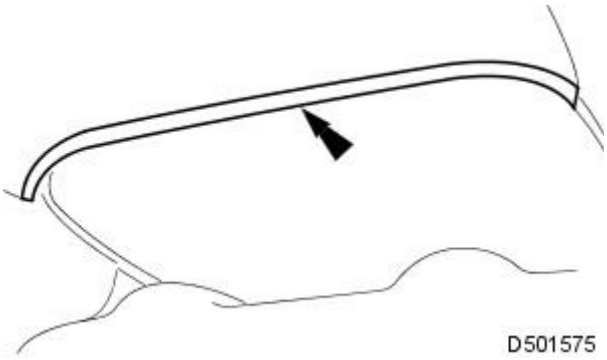

8. Remove the tape from the inner edge of the roof panel.

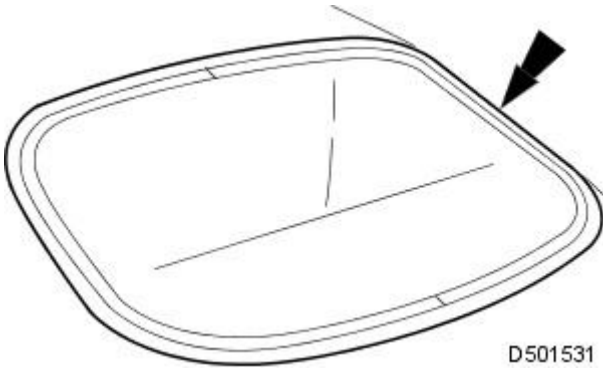

9. Remove the protective sheet and the protective board from the parcel shelf.

10. Remove the protective tape from around the windshield glass aperture.

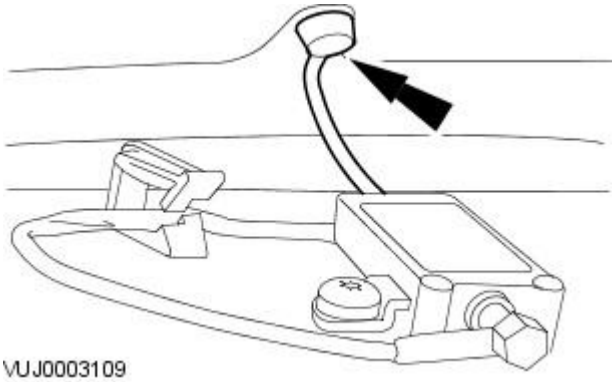

11. CAUTION: Do not connect the electrical connector for at least 1 hour after installation of the windshield glass. Failure to follow these instructions may result in damage to the windshield glass adhesive.

Connect the electrical connector.

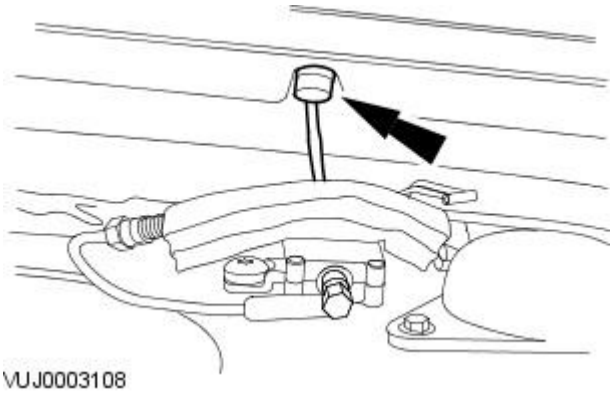

12. CAUTION: Do not connect the electrical connector for at least 1 hour after installation of the windshield glass. Failure to follow these instructions may result in damage to the windshield glass adhesive.

Connect the electrical connector.

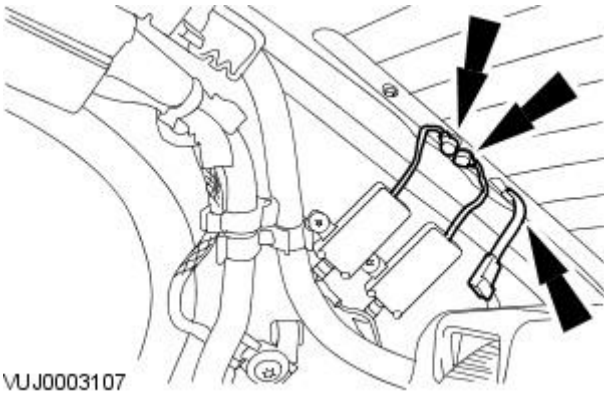

13. CAUTION: Do not connect the electrical connectors for at least 1 hour after installation of the windshield glass. Failure to follow these instructions may result in damage to the windshield glass adhesive.

Connect the electrical connectors.

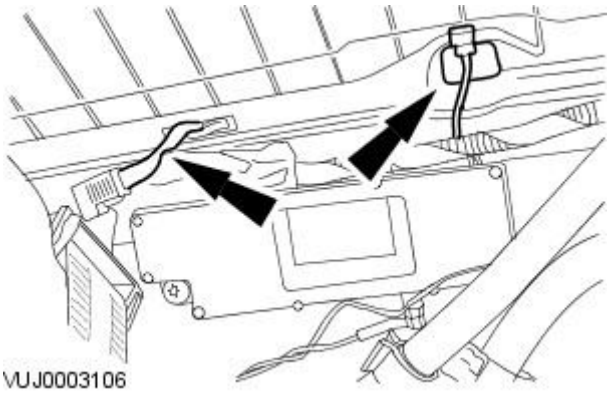

14. CAUTION: Do not connect the electrical connectors for at least 1 hour after installation of the windshield glass. Failure to follow these instructions may result in damage to the windshield glass adhesive.

Connect the electrical connectors.

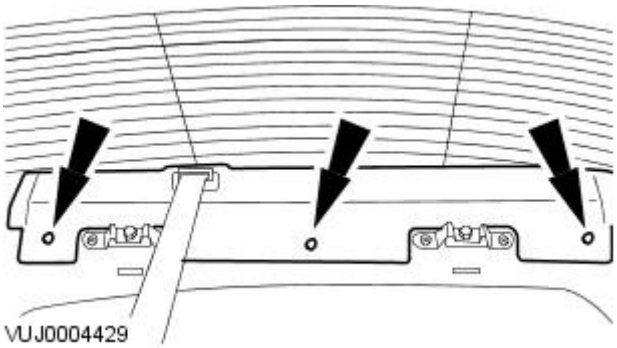

15. Attach the parcel shelf trim panel.

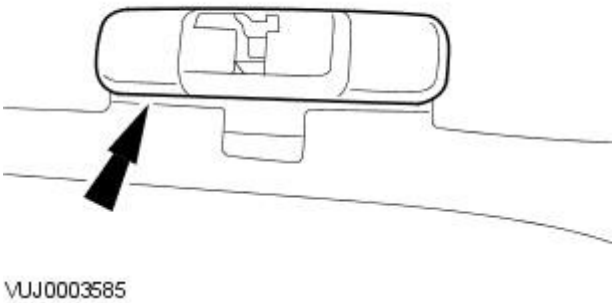

16. Install the rear seat backrest latch covers.

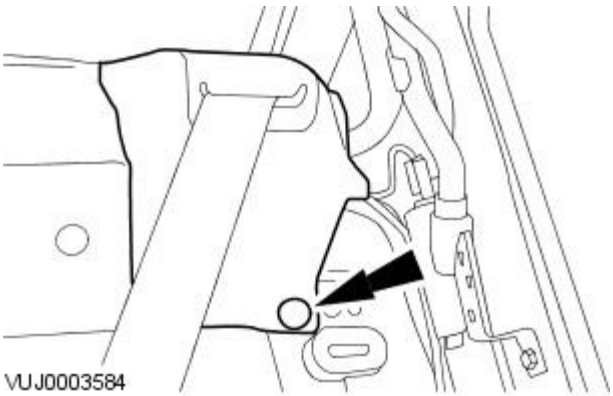

17. Attach the seat belt reel trim panels.

18. Install the high level stop lamp. For additional information, refer to Section 417-01 Exterior Lighting.

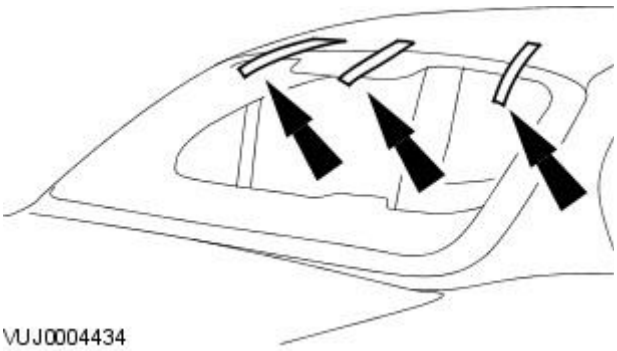

19. CAUTION: Make sure the windshield glass adhesive is set before removing the protective tape.

Remove the protective tape from the top of the windshield glass.

Glass, Frames and Mechanisms - Window Control Switch

Removal and Installation

Removal

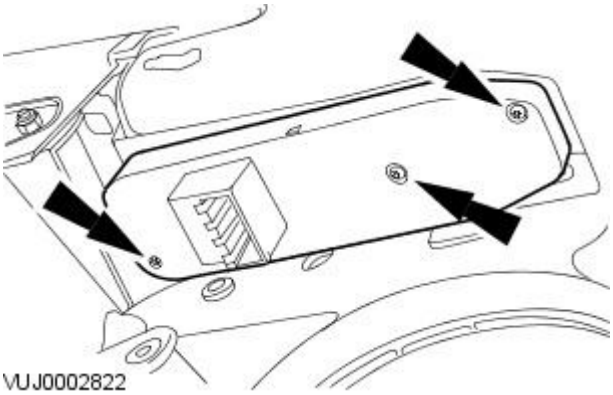

1. Remove the front door trim panel. For additional information, refer to Section 501-05 Interior Trim and Ornamentation.
2. Remove the window control switch.

Installation

1. To install, reverse the removal procedure.

Glass, Frames and Mechanisms - Windshield Glass Using Cheese Wire

Removal and Installation

Removal

1. Remove the sun visors.
   For additional information, refer to Section 501-05 Interior Trim and Ornamentation.
2. Remove the cowl vent screen cover.
   For additional information, refer to Section 501-02 Front End Body Panels.
3. Remove the interior mirror.
   For additional information, refer to Section 501-09 Rear View Mirrors.
4. NOTE: Left-hand shown, right-hand similar.

   Disconnect the heated windshield glass electrical connectors.

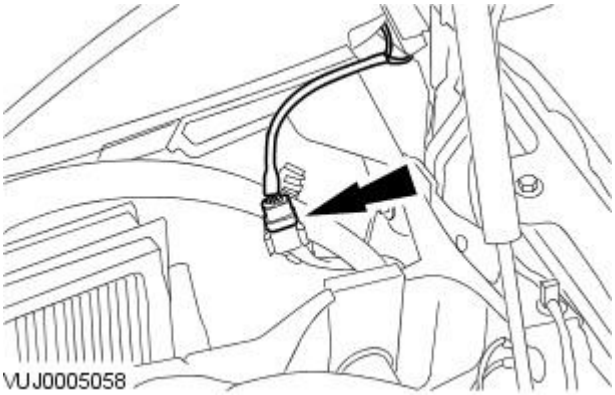

5. Remove the A-pillar exterior trim.

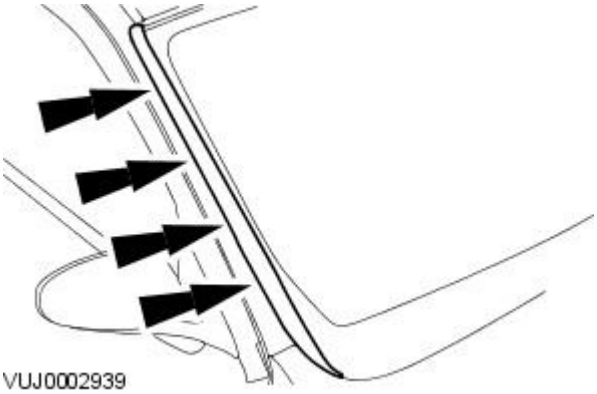

6. Apply suitable protective tape around the windshield glass aperture to protect the paintwork.

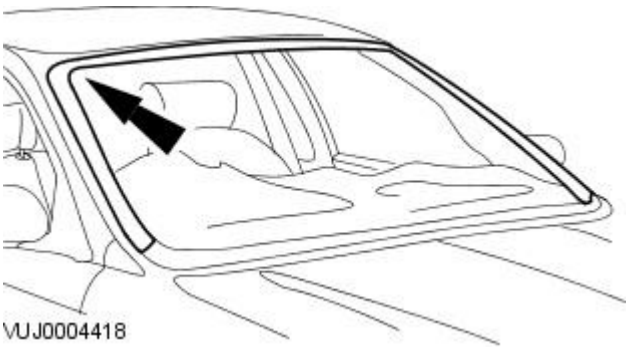

7. Place a suitable protective sheet over the fascia and place a protective board over the sheet.
8. Apply suitable protective tape to the leading inner edge of the roof panel.

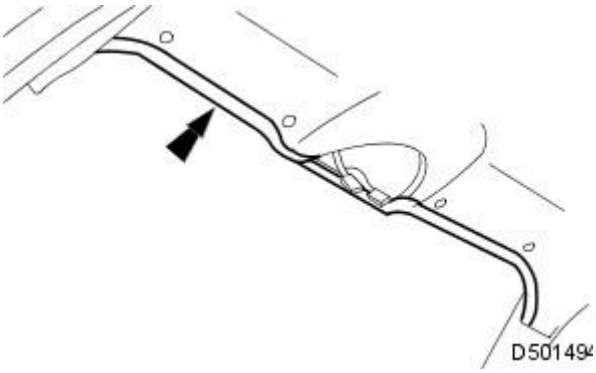

9. Prepare the cheese wire and the cutting handle.
   - Position the cutting handle central tube fully upwards in the

handle.

- Cut a suitable length of cheese wire and pass one end through the handle tube and the locating aperture.
- Move the cutting handle central tube downwards to secure the cheese wire.

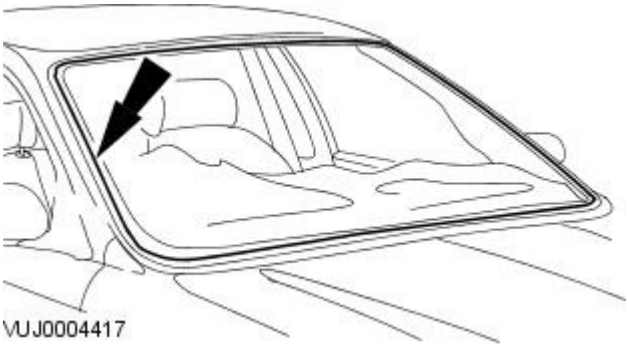

10. Using a suitable long bladed tool, penetrate the windshield glass adhesive approximately 150 mm (0.59 in) from the top of one A-pillar.

11. Remove the tool, pass the free end of the cheese wire through the penetration and install the second cutting handle.

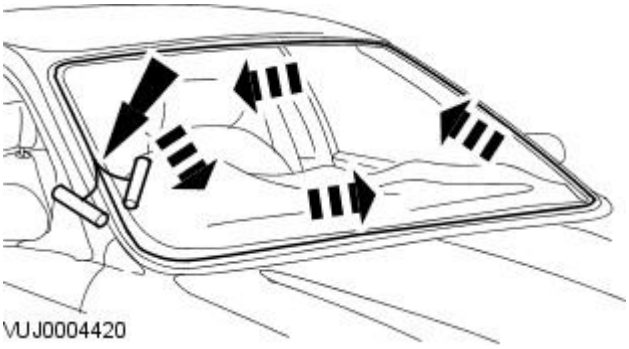

12. With assistance and exercising care to avoid damaging the paintwork, cut around the windshield glass commencing downwards and along the bottom.

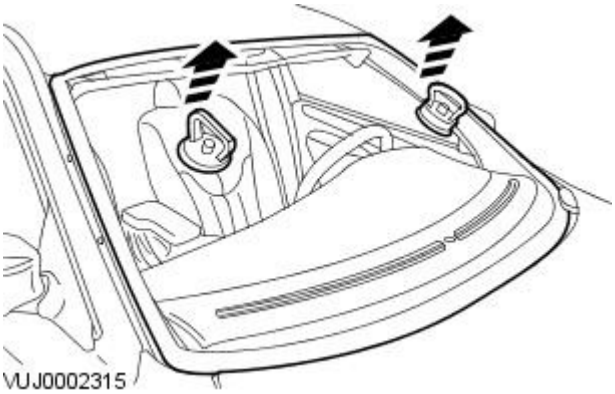

13. With assistance remove the windshield glass.

- Attach the lifting handles to the windshield glass.

14. Remove the lifting handles from the windshield glass.

15. Remove the cheese wire cutting tool from the windshield glass aperture, separate the handles by moving center tubes upwards and discard the cheese wire.

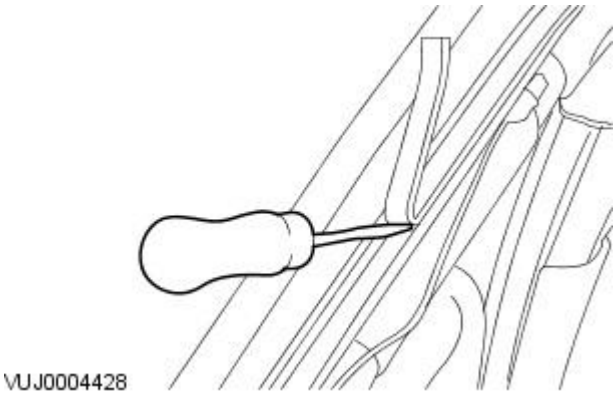

16. NOTE: To aid bonding of a new windshield glass, make sure at least 1 mm (0.3 in) of residual adhesive remains on the body flange.

Using a suitable tool remove the residual adhesive from the body flange.

Installation

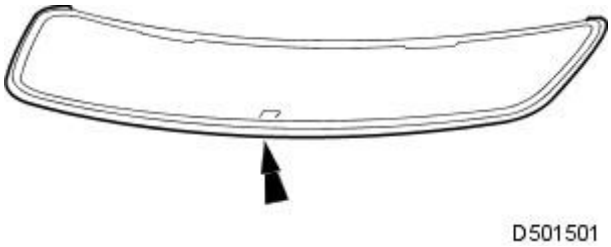

1. Make sure the new windshield glass surface is clean using Betawipe spirit.

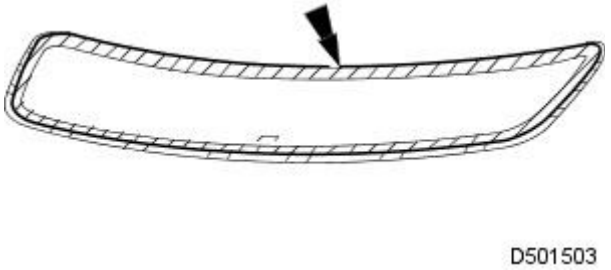

2. Apply glass primer to mating face of the windshield glass.

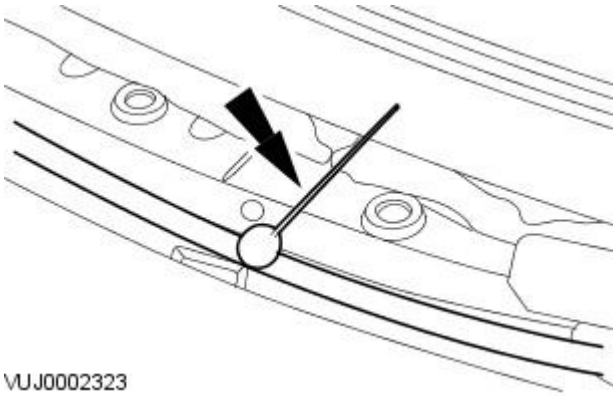

3. Apply glass primer to the mating face of the body flange.

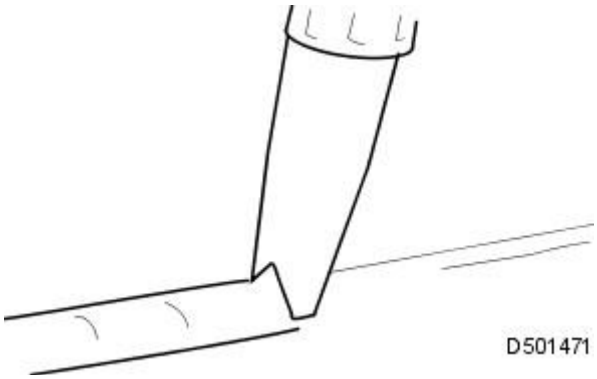

4. Cut the adhesive nozzle to achieve a triangular section bead 8 mm (0.31in) wide by 13 mm (0.51 in) high.

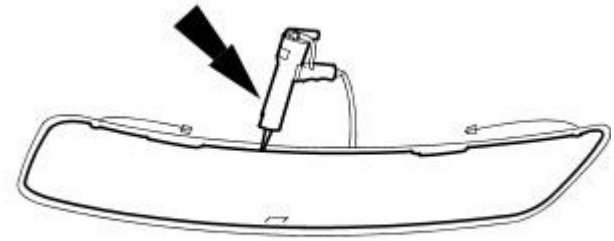

VUJ0001951

5. NOTE: Apply windshield adhesive WSS-M2G379-A6A or equivalent meeting Jaguar specification around the windshield glass edge.

Using a suitable pneumatic application gun, apply a uniform bead of adhesive to the windshield glass edge commencing at the bottom center and overlapping the ends approximately 14 mm (0.55 in).

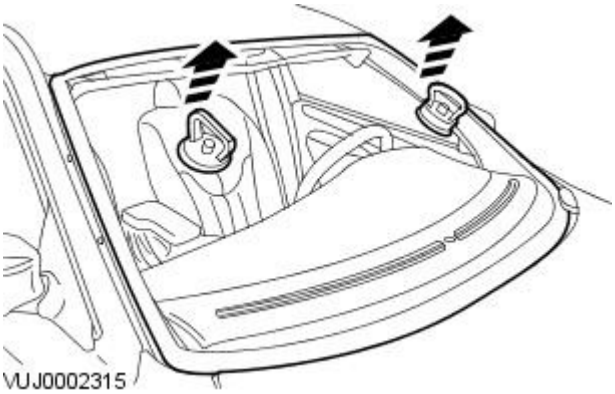

VUJ0002315

6. WARNINGS:

If the windshield glass is being installed at 23°C (73°F) or above make sure the vehicle is not driven for at least 1 hour after installation.

If the windshield glass is being installed at a temperature of 11°C (52°F) to 23°C (73°F) make sure the vehicle is not driven for at least 1.5 hours after installation.

If the windshield glass is being installed at a temperature of 5°C (41°F) to 11°C (52°F) make sure the vehicle is not driven for at least 2 hours after installation.

If the windshield glass is being installed at a temperature below 5°C (41°F) use heat and make sure the windshield glass adhesive has set before the vehicle is driven.

CAUTION: When installing the windshield glass, do not strike it in any way as this will crack the glass.

Install the lifting handles and with assistance, carefully position the windshield glass in the aperture.

- Align the windshield glass and press firmly into place.
- Remove the lifting handles.

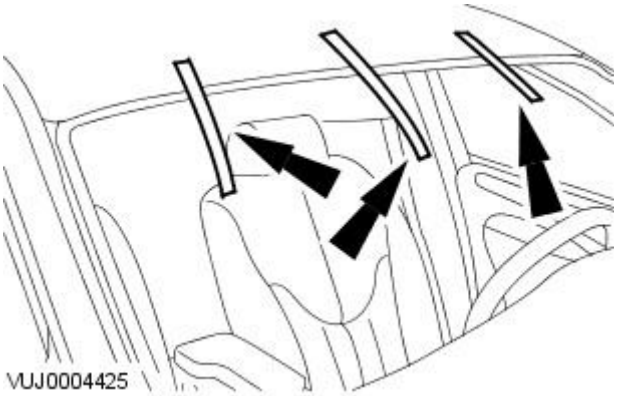

VUJ0004425

7. CAUTION: Make sure the windshield glass does not move out of position in the windshield glass aperture.

Apply suitable protective tape to the top of the windshield glass.

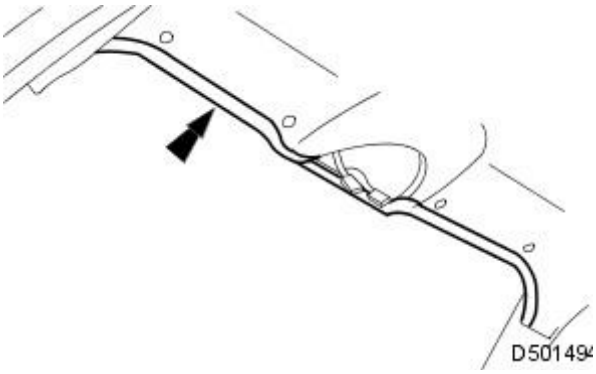

D50149

8. Remove the protective tape from the inner leading edge of the roof panel.

9. Remove the protective sheet and the protective board from the fascia.

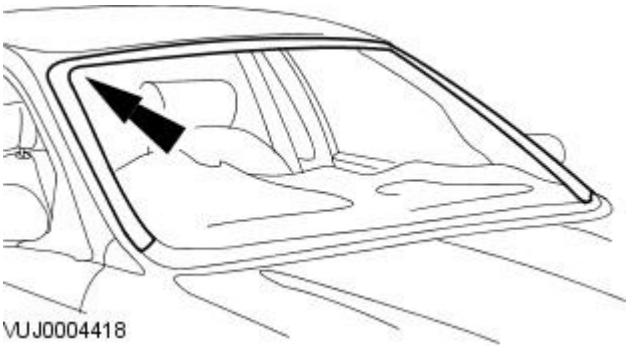

10. Remove the protective tape from the windshield glass aperture.

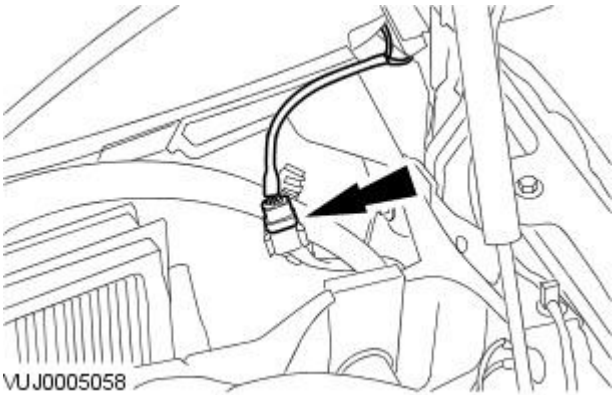

11. NOTE: Left-hand shown, right-hand similar.

Connect the the heated windshield glass electrical connectors.

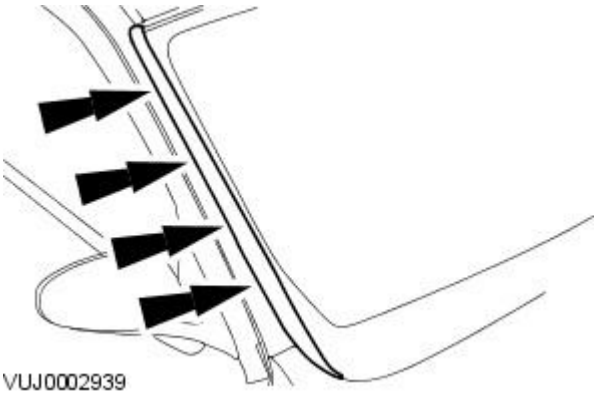

12. Install the A-pillar exterior trim.

13. Install the rear view mirror.
For additional information, refer to Section 501-09 Rear View Mirrors.

14. Install the cowl vent screen cover.
For additional information, refer to Section 501-02 Front End Body Panels.

15. Install the sun visors.
For additional information, refer to Section 501-05 Interior Trim and Ornamentation.

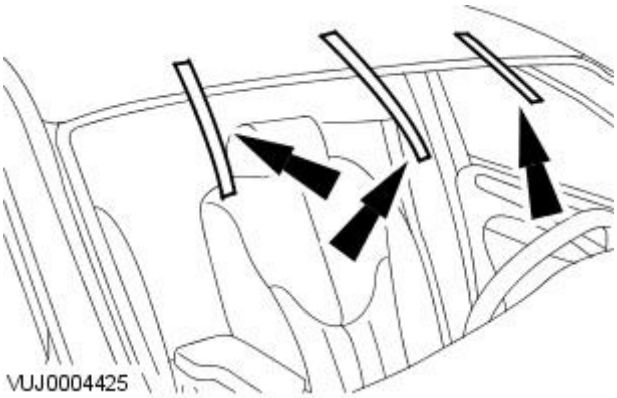

16. CAUTION: Make sure the windshield glass adheasive is set before removing the protective tape.

Remove the protective tape from the top of the windshield glass.

Glass, Frames and Mechanisms - Windshield Glass Using Cutting Tool

Removal and Installation

Special Tool(s)	
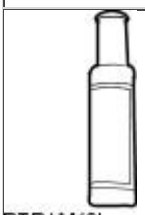 BTB-WK9L	Lubricant concentrate BTB-WK9L
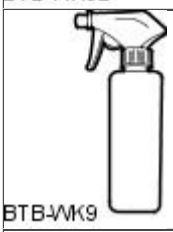 BTB-WK9	Spray bottle BTB-WK9
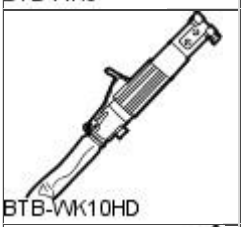 BTB-WK10HD	Cutting tool BTB-WK10HD
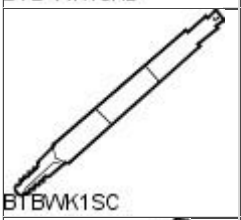 BTBWK1SC	Serrated extra long flat cutting blade BTB-WK1SC
BTB-WK24ZSC	Serrated general purpose 'Z' cutting blade BTB-WK24ZSC
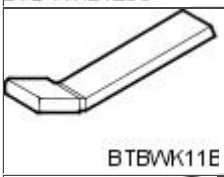 BTBWK11E	Cutting blade controller arm BTB-WK11B
BTB-WK27RM	Reverse powered cold knife blade cutting tool BTB-WK27RM
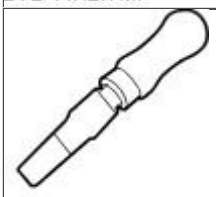 BTB-WK6	Pinchweld scraper blade BTB-WK6

Removal

1. Remove the sun visors.
   For additional information, refer to Section 501-05 Interior Trim and Ornamentation.
2. Remove the cowl vent screen.
   For additional information, refer to Section 501-02 Front End Body Panels.
3. Remove the interior mirror.
   For additional information, refer to Section 501-09 Rear View Mirrors.

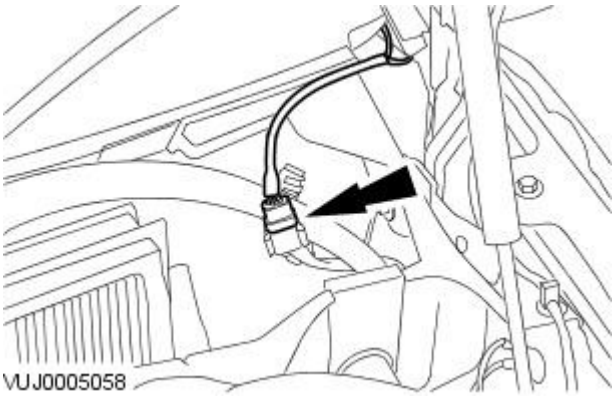

4. NOTE: Left-hand shown, right-hand similar.

Disconnect the heated windshield glass electrical connectors.

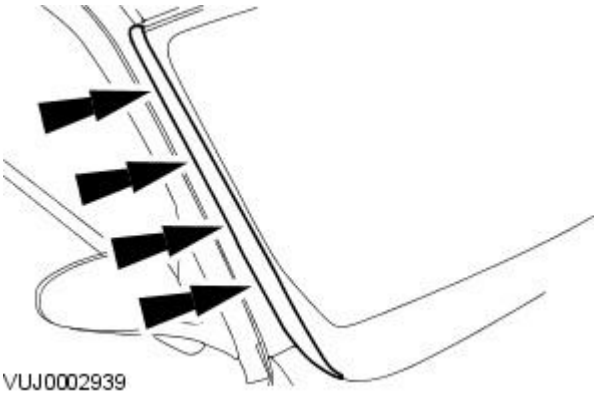

5. Remove the A-pillar exterior trim.

6. Apply suitable protective tape around the windshield glass aperture to protect the paintwork.

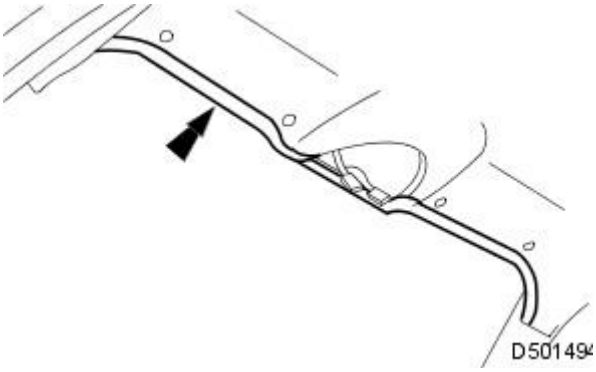

7. Place a suitable protective sheet over the fascia and place a protective board over the sheet.

8. Apply suitable protective tape to the leading inner edge of the roof panel.

9. Dispense 20 ml of WK9L lubricant into the WK9 spray bottle, fill the spray bottle with water and mix.

10. Apply cutting lubricant to the lower windshield glass adhesive and approximately 150 mm (5.9 in) up the A-pillar.

11. Install the cutting tool blade BTB-WK1SC to the cutting tool BTB-WK10HD.

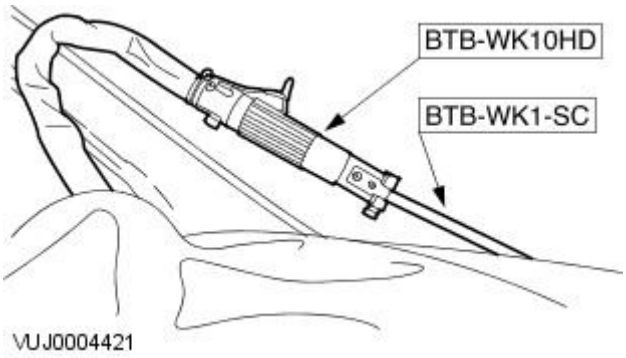

12. NOTE: Right-hand shown, left-hand similar.

Using the cutting tool, cut through the lower windshield glass adhesive and approximately 150 mm (5.9 in) up the A-pillar.

13. Apply cutting lubricant to both sides of the inner A-pillar windshield glass adhesive.

14. NOTE: Remove the cutting tool blade BTB-WK1SC from the cutting tool BTB-WK10HD.

Install the cutting tool side cutting blade BTB-WK24ZS and the cutting tool controller arm BTB-WK11B to the cutting tool BTB-WK10HD.

- Set the cutting tool controller arm to 20 mm.

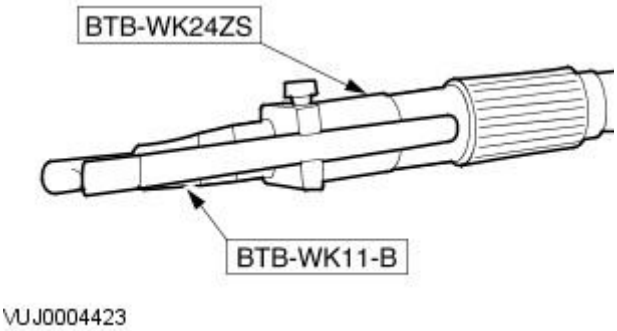

15. NOTE: Right-hand shown, left-hand similar.

• NOTE: Start cutting the windshield glass adhesive from the top of the A-piller downwards.

Using the cutting tool, cut through A-pillar windshield glass adhesive.

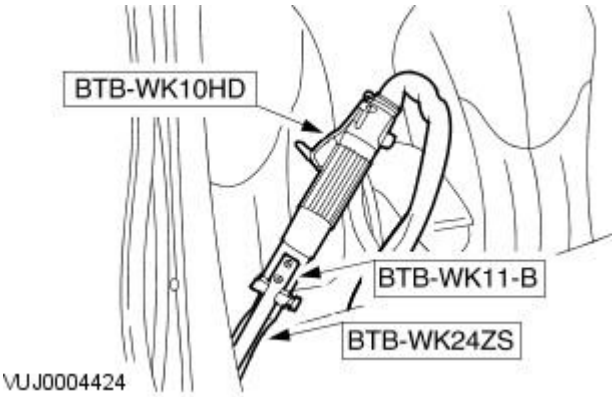

16. Apply cutting lubricant to the top of the inner windshield glass adhesive.

17. Apply suitable protective tape to the top of the windshield glass.

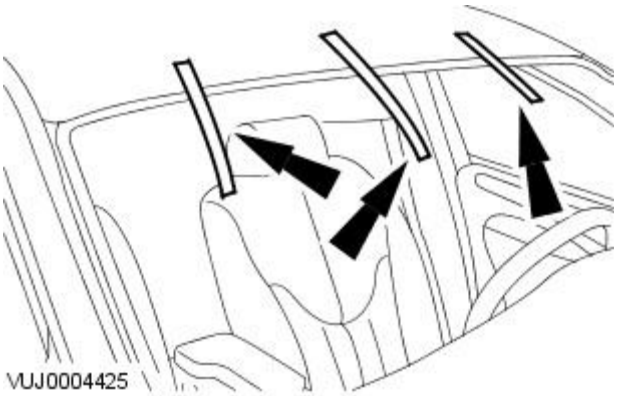

18. NOTE: Start cutting from either corner into the center and continue the cut all the way through to the other corner. Do not cut from each corner into the center of the windshield glass as the pressure on the center of the windshield glass could cause breakage.

Using the cutting tool, cut through the top of the inner windshield glass adhesive.

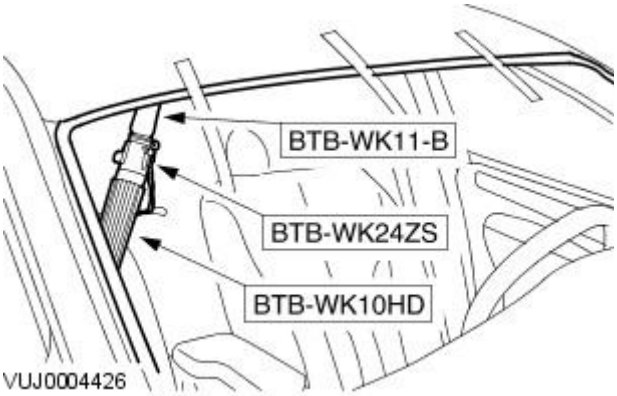

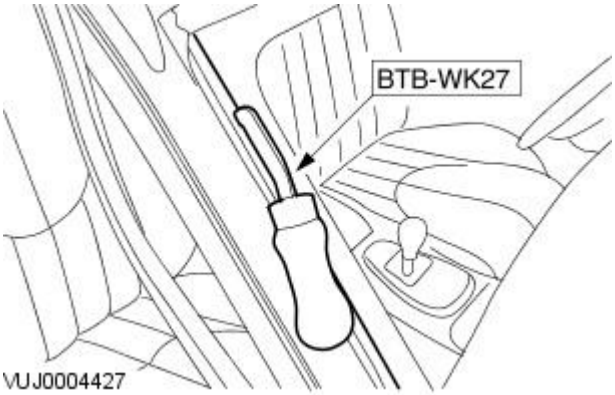

19. NOTE: Right-hand shown, left-hand similar.

Using the special tool cut through any remaining windshield glass adhesive on the A-pillars.

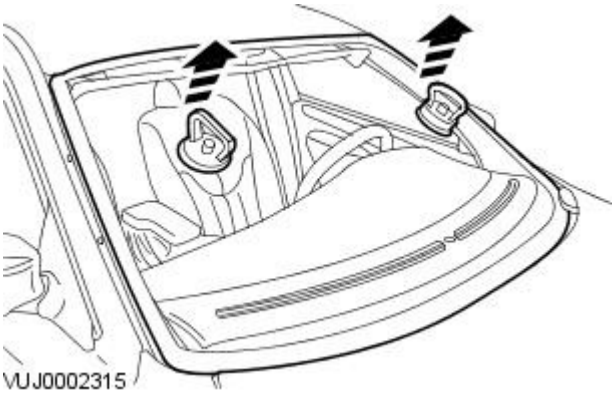

20. With assistance remove the windshield glass.

- Attach the lifting handles to the windshield glass.

21. Remove the lifting handles from the windshield glass.

22. NOTE: To aid bonding of a new windshield glass, make sure at least 1 mm (0.3 in) of residual adhesive remains on the body flange.

Using the special tool remove the residual adhesive from the body flange.

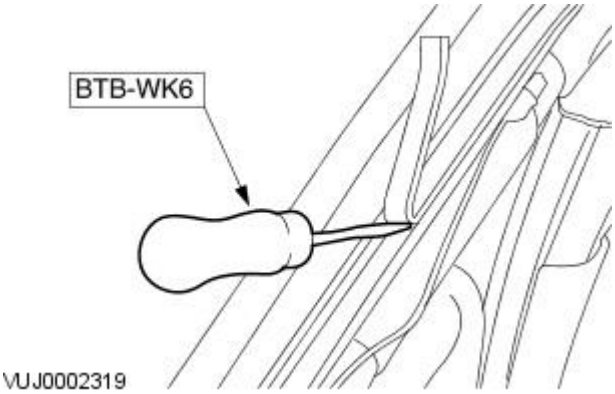

Installation

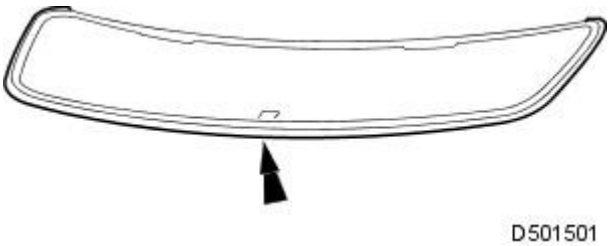

1. Make sure the new windshield glass surface is clean using Betawipe spirit.

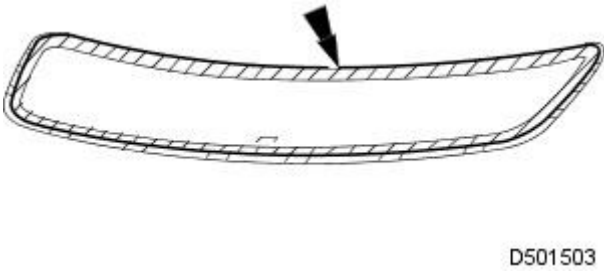

2. Apply glass primer to mating face of the windshield glass.

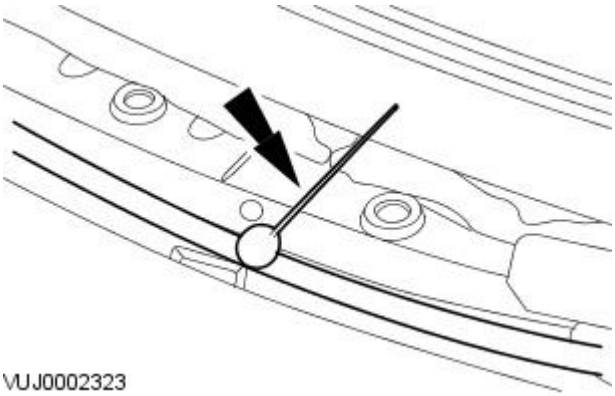

3. Apply glass primer to the mating face of the body flange.

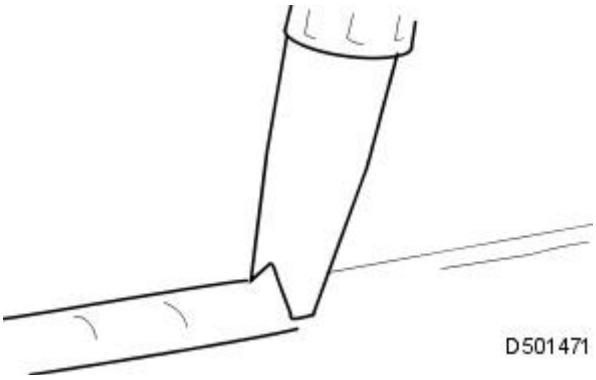

4. Cut the adhesive nozzle to achieve a triangular section bead 8 mm (0.31in) wide by 13 mm (0.51 in) high.

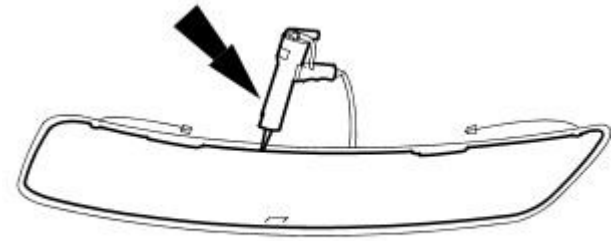

5. NOTE: Apply windshield adhesive WSS-M2G379-A6A or equivalent meeting Jaguar specification around the windshield glass edge.

Using a suitable pneumatic application gun, apply a uniform bead of adhesive to the windshield glass edge commencing at the bottom center and overlapping the ends approximately 14 mm (0.55 in).

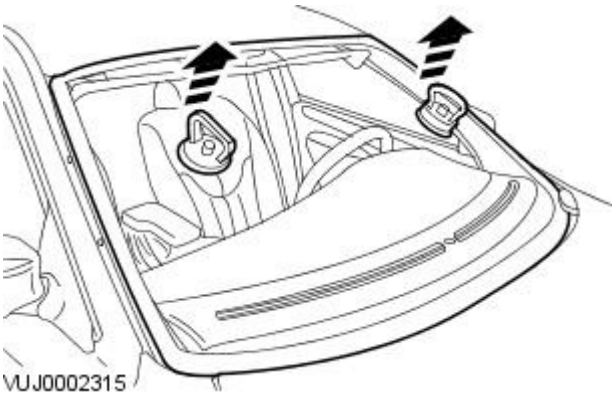

6. WARNINGS:

If the windshield glass is being installed at 23°C (73°F) or above make sure the vehicle is not driven for at least 1 hour after installation.

If the windshield glass is being installed at a temperature of 11°C (52°F) to 23°C (73°F) make sure the vehicle is not driven for at least 1.5 hours after installation.

If the windshield glass is being installed at a temperature of 5°C (41°F) to 11°C (52°F) make sure the vehicle is not driven for at least 2 hours after installation.

If the windshield glass is being installed at a temperature below 5°C (41°F) use heat and make sure the windshield glass adheasive has set before the vehicle is driven.

CAUTION: When installing the windshield glass, do not strike it in any way as this will crack the glass.

Install the lifting handles and with assistance, carefully position the windshield glass in the aperture.

- Align the windshield glass and press firmly into place.
- Remove the lifting handles.

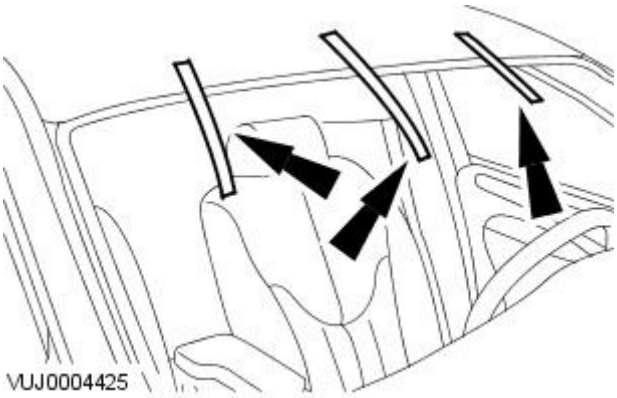

7. CAUTION: Make sure the windshield glass does not move out of position in the windshield glass aperture.

Apply suitable protective tape to the top of the windshield glass.

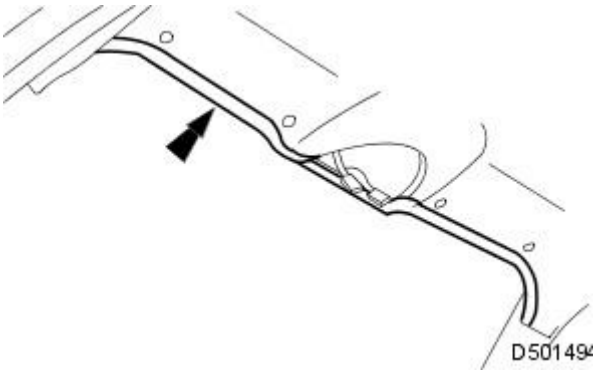

8. Remove the protective tape from the inner leading edge of the roof panel.

9. Remove the protective sheet and the protective board from the fascia.

10. Remove the protective tape from the windshield glass aperture.

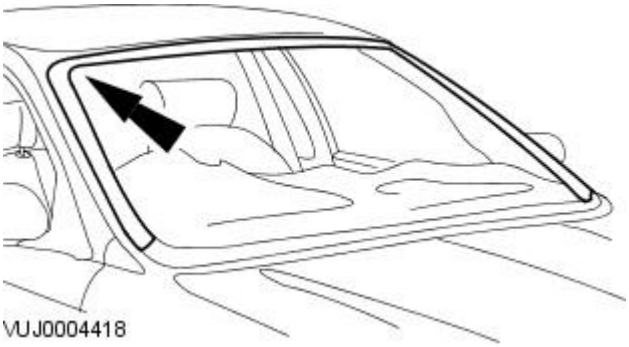

11. NOTE: Left-hand shown, right-hand similar.

Connect the the heated windshield glass electrical connectors.

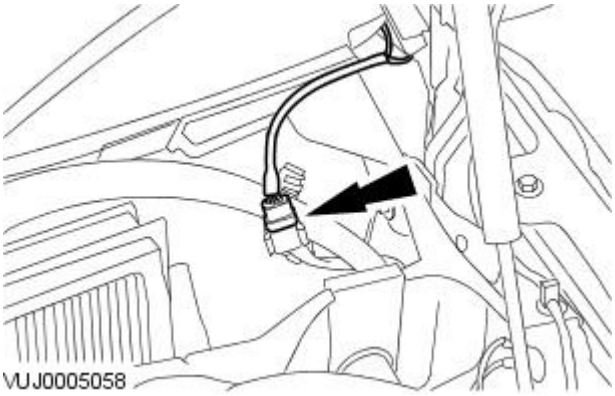

12. Install the A-pillar exterior trim.

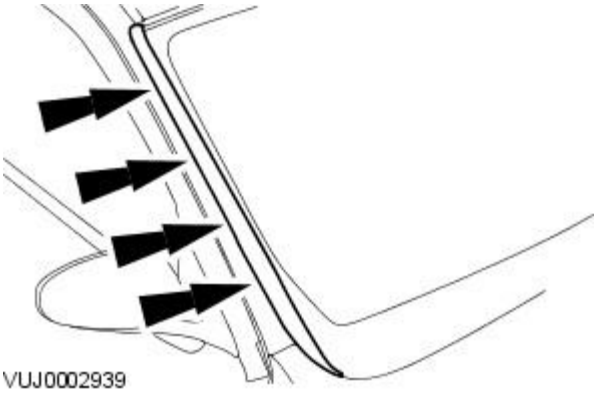

13. Install the interior mirror.

For additional information, refer to Section 501-09 Rear View Mirrors.

14. Install the cowl vent screen. For additional information, refer to Section 501-02 Front End Body Panels.

15. Install the sun visors. For additional information, refer to Section 501-05 Interior Trim and Ornamentation.

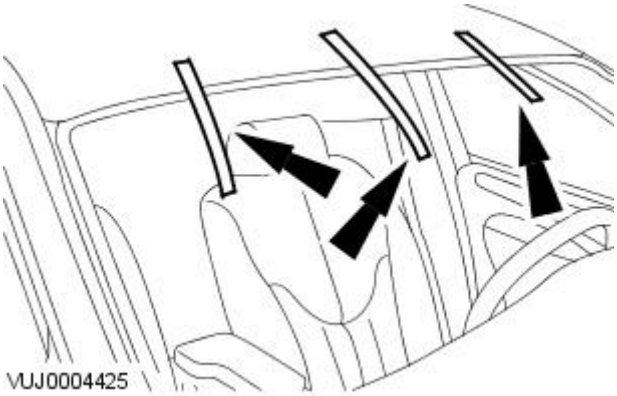

16. CAUTION: Make sure the windshield glass adhesive is set before removing the protective tape.

Remove the protective tape from the top of the windshield glass.

Instrument Panel and Console - Instrument Panel

Description and Operation

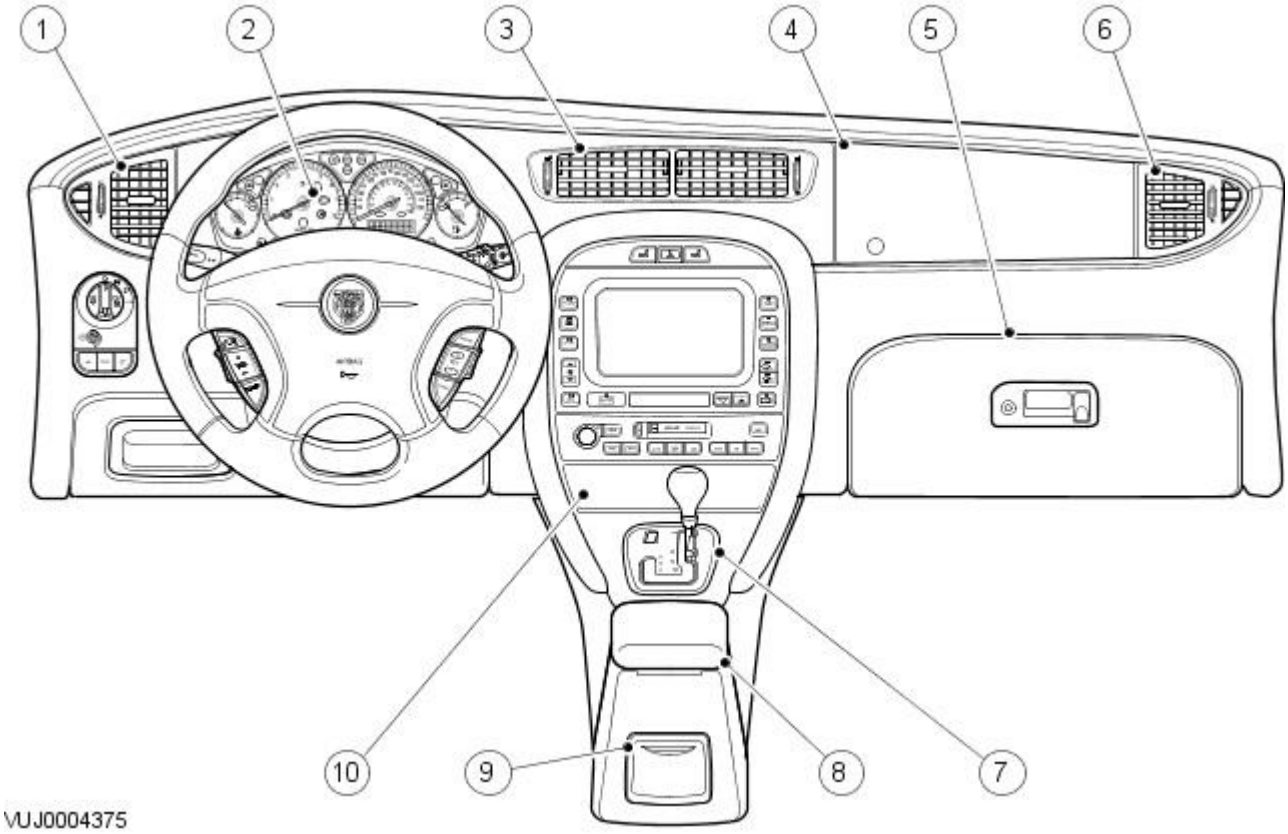

Item	Part Number	Description
1	—	Left hand side register
2	—	Instrument cluster
3	—	Center register
4	—	Passenger air bag module
5	—	Glovebox
6	—	Right hand side register
7	—	J-gate surround
8	—	Arm rest
9	—	Rear ashtray
10	—	Front ashtray

The instrument panel assembly houses the main instrument cluster, passenger air bag module, glovebox, and air distribution registers, all of which can be readily removed without disturbing the instrument panel. The instrument panel wiring harness is located behind the instrument panel assembly to facilitate easy installation in vehicle. The instrument panel must be removed from the vehicle to gain access to the wiring harness.

Console

The floor console is located between the front seats and, depending upon trim level, consists of the ashtray, cigar lighter and armrest. The center section of the console forms a deep stowage box with a secondary cupholder. The optional telephone is incorporated within the armrest. In both cases the center console utilizes a rear hinged lid which is padded to form a central arm rest. A dynamic stability control 'ON/OFF' selector switch, if fitted, is situated immediately in front of the stowage box. Situated in the rear of the center console is a rear passenger ashtray.

The roof console is located between the front sun visors and, depending upon vehicle options, consists of the front overhead courtesy light, two reading/map lights, remote convenience buttons, sunroof switch, emergency messaging buttons and a microphone.

Instrument Panel and Console - Floor Console

Removal and Installation

Removal

All vehicles

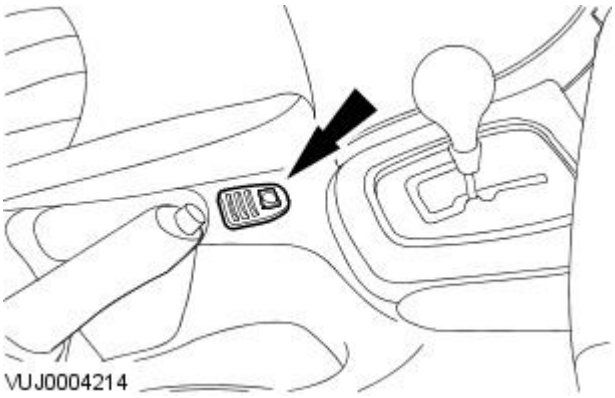

1. Detach the electronic passive anti-theft system (PATS) light.

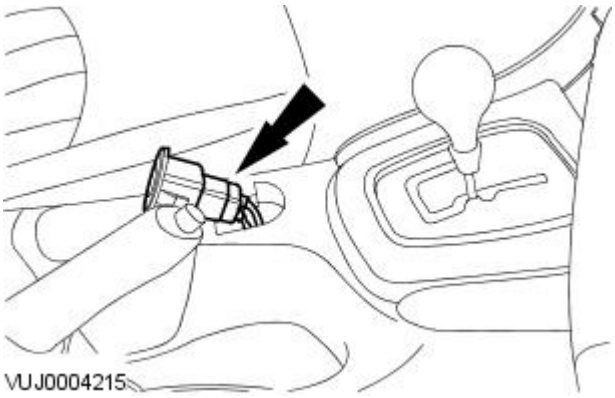

2. Remove the PATS light.

- Disconnect the electrical connector.

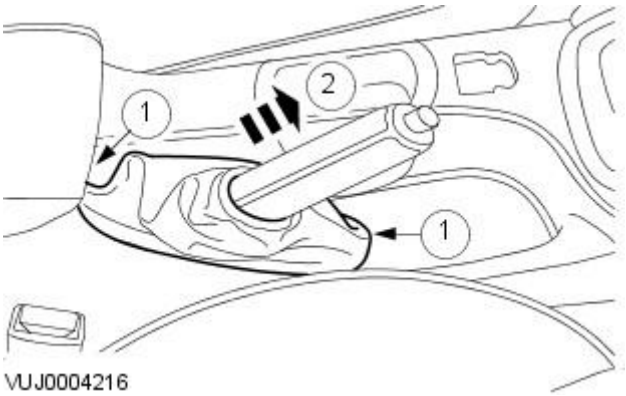

3. Remove the hand brake lever surround.

1. Detach the hand brake lever surround.
2. Remove the hand brake lever surround.

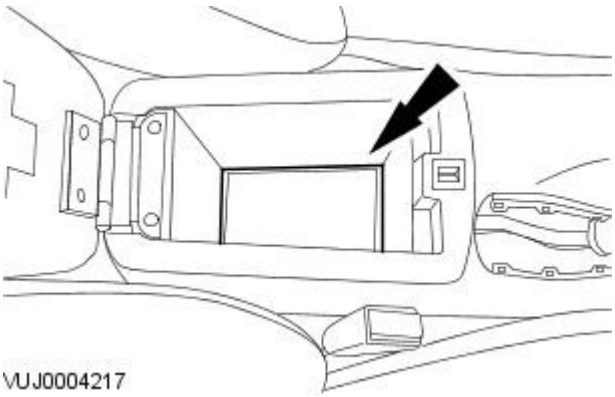

4. Remove the console stowage compartment non slip mat.

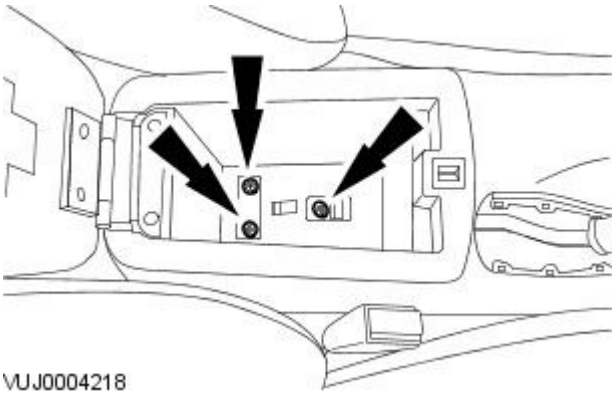

5. Remove the retaining screws.

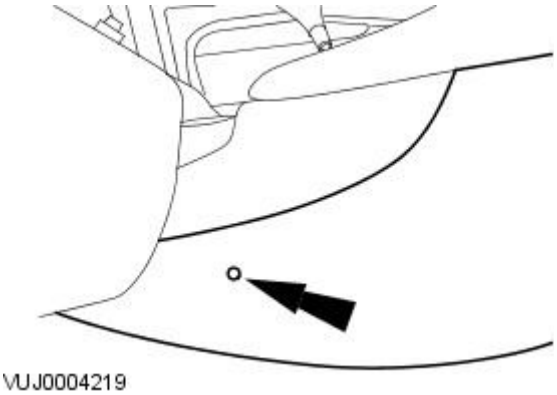

6. Remove the center console trim panel.

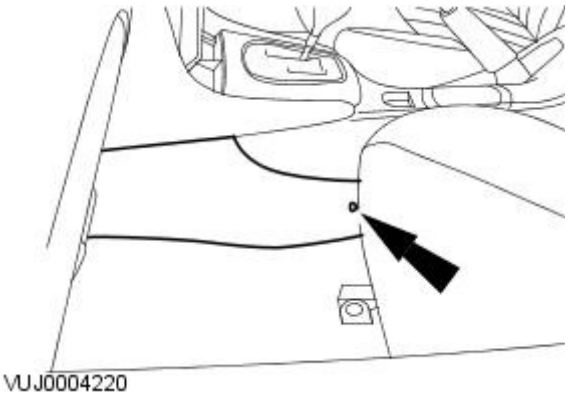

7. Remove the center console trim panel.

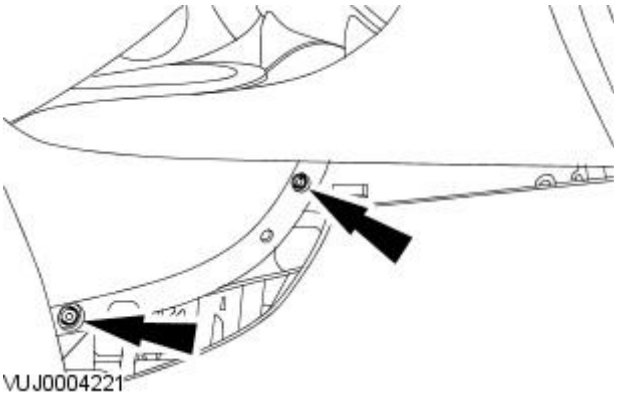

8. NOTE: Right hand shown, left hand similar.

Remove the retaining screws.

Vehicles with automatic transmission

9. Remove the J-gate surround.

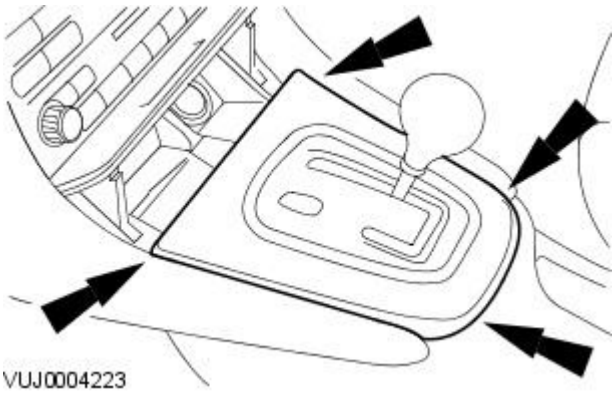

Vehicles with manual transmission

10. Detach the gear selector surround.

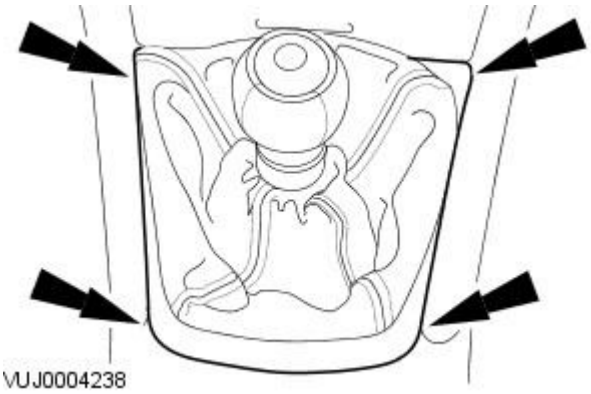

All vehicles

11. Remove the retaining screws.

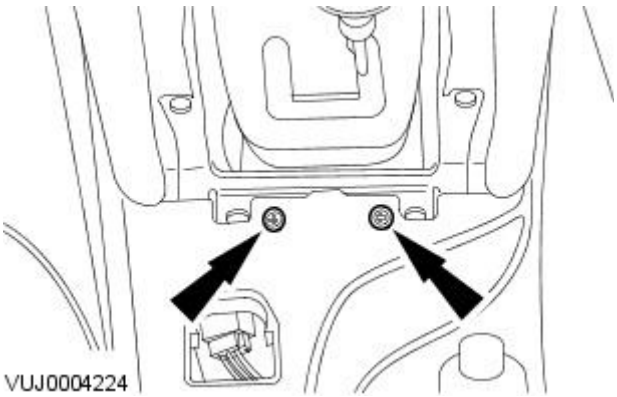

Vehicles with cordless cellular phone

12. Disconnect the bluetooth upgrade module electrical connector.

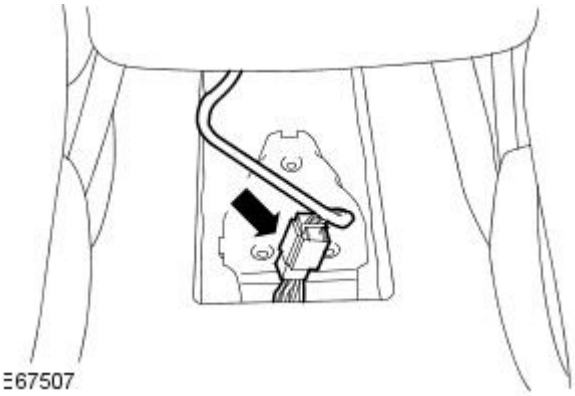

All vehicles

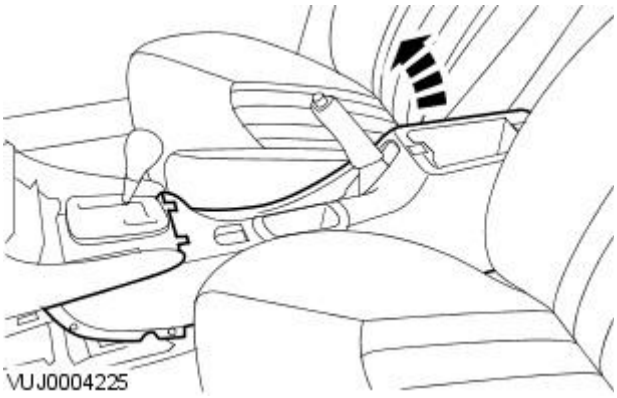

13. Remove the floor console.

Installation

1. To install, reverse the removal procedure.

Instrument Panel and Console - Instrument Panel

Removal and Installation

Removal

All vehicles

1. Remove the console.
   For additional information, refer to: Floor Console (501-12 Instrument Panel and Console, Removal and Installation).
2. Remove the climate control panel.
   For additional information, refer to: Climate Control Assembly (412-04 Control Components, Removal and Installation).
3. Remove the navigation system display module (if equipped).
   For additional information, refer to: Navigation System Display Module (419-07 Navigation System, Removal and Installation).
4. Remove the instrument cluster.
   For additional information, refer to: Instrument Cluster (413-01 Instrument Cluster, Removal and Installation).
5. Remove the passenger air bag module.
   For additional information, refer to: Passenger Air Bag Module (501-20B Supplemental Restraint System, Removal and Installation).
6. Remove the steering column.
   For additional information, refer to: Steering Column (211-04 Steering Column, Removal and Installation).
7. Remove the headlamp switch.
   For additional information, refer to: Headlamp Switch (417-01 Exterior Lighting, Removal and Installation).

Vehicles with manual transmission

8. Remove the gear selector knob.

E49096

9. Detach the gear selector surround.

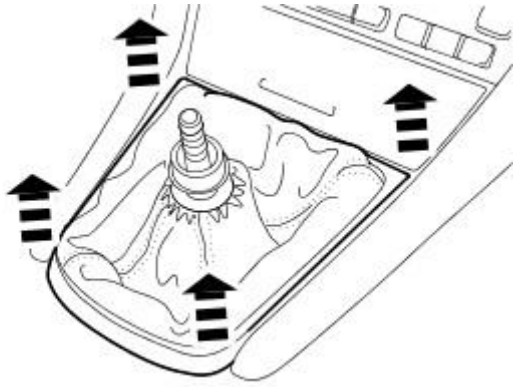

E49097

10. Remove the gear selector surround.
    1. Detach the reverse gear interlock mechanism.
    2. Remove the gear selector surround.

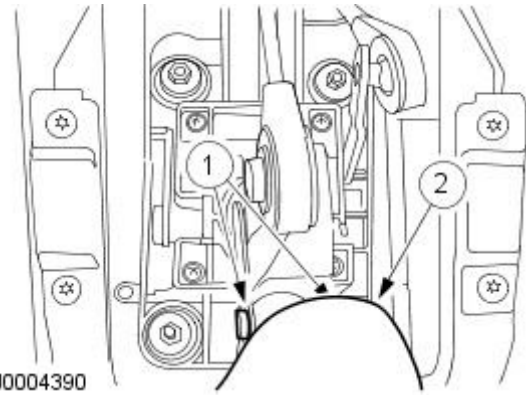

VUJ0004390

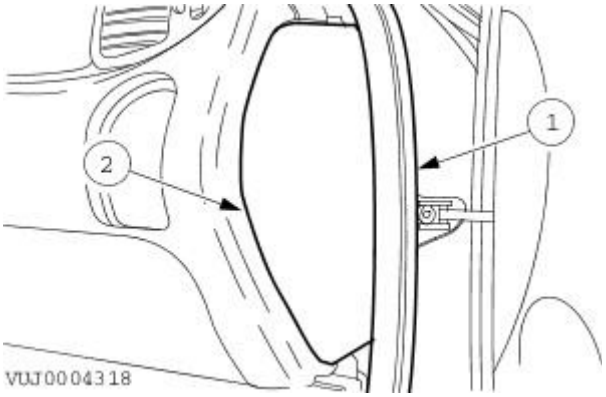

11. Remove the right hand end panel.

1. Detach the front door opening weather strip.
2. Remove the right hand end panel.

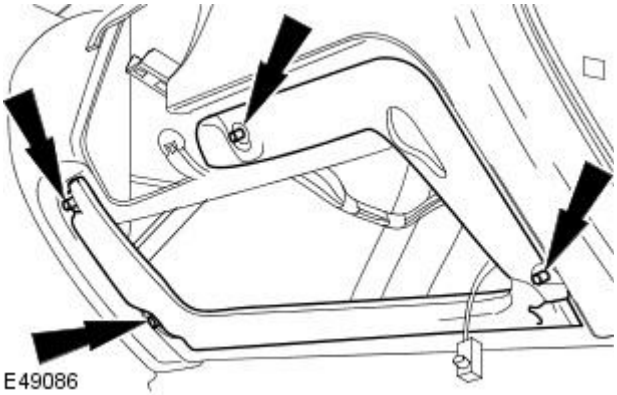

12. Remove support panel.

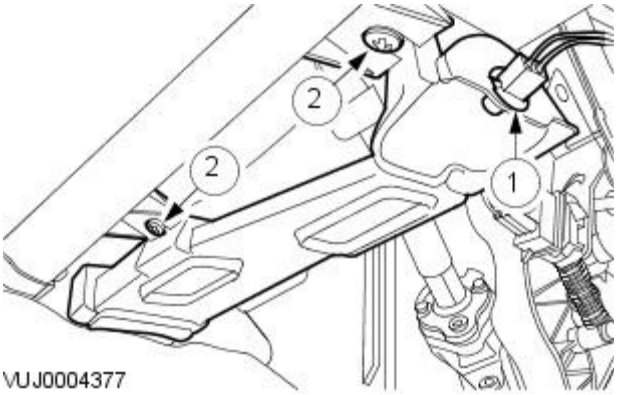

13. Remove the lower vent.

1. Detach the bulb holder.
2. Remove the lower vent.

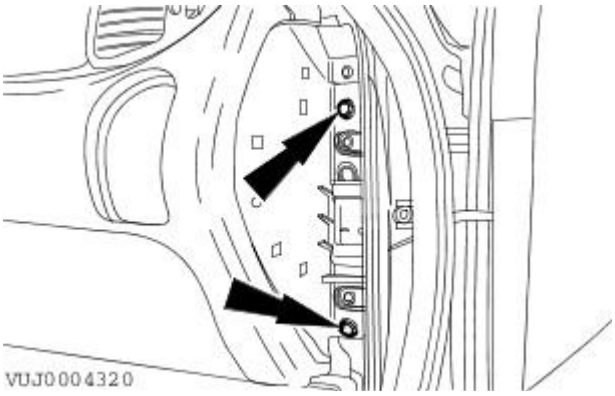

14. Remove the instrument panel retaining screws.

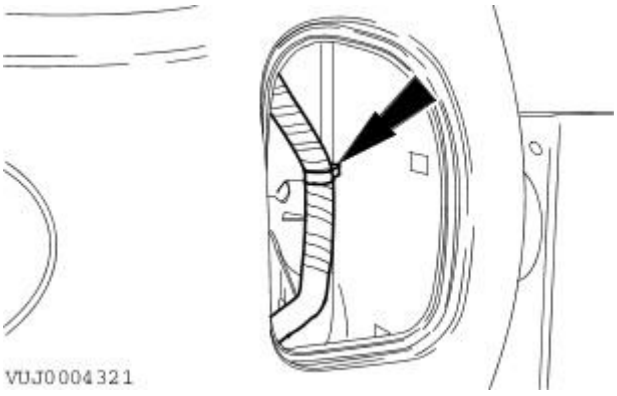

15. Detach the electrical harness.

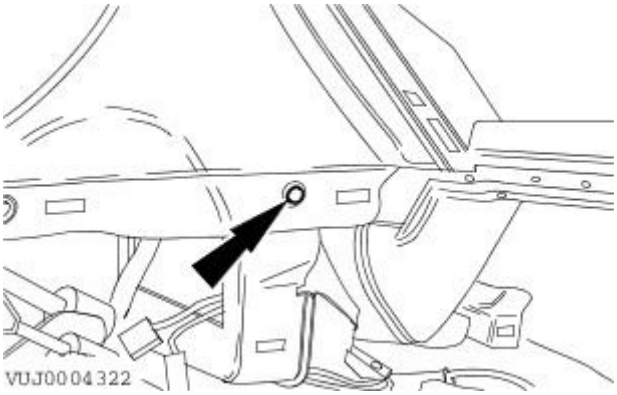

16. Remove the instrument panel retaining screw.

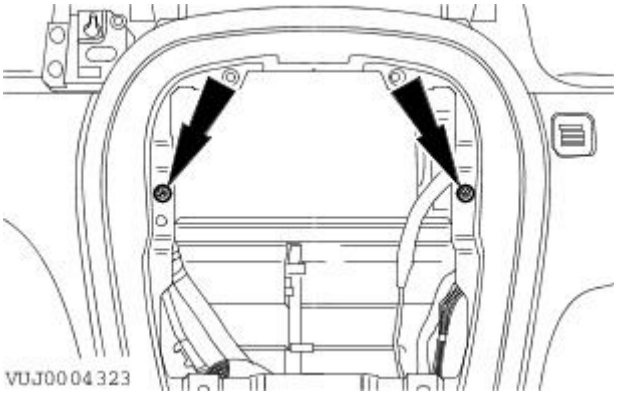

17. Remove the instrument panel retaining screws.

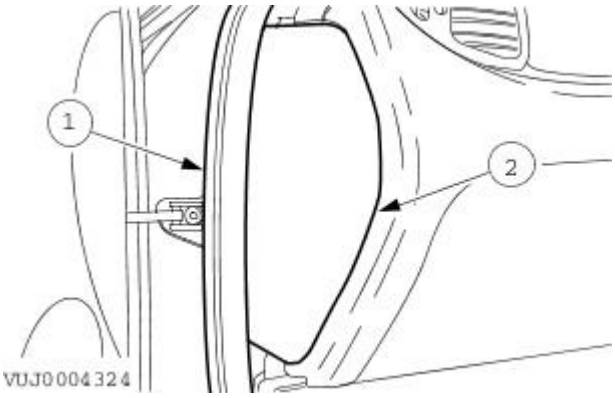

18. Remove the left hand end panel.

1. Detach the front door opening weather strip.
2. Remove the left hand end panel.

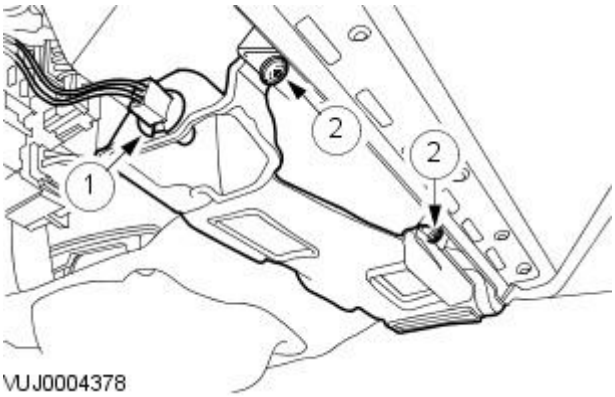

19. Remove the lower vent.

1. Detach the bulb holder.
2. Remove the lower vent.

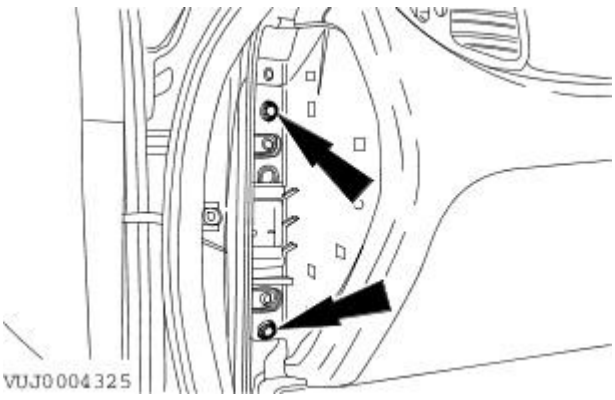

20. Remove the instrument panel retaining screws.

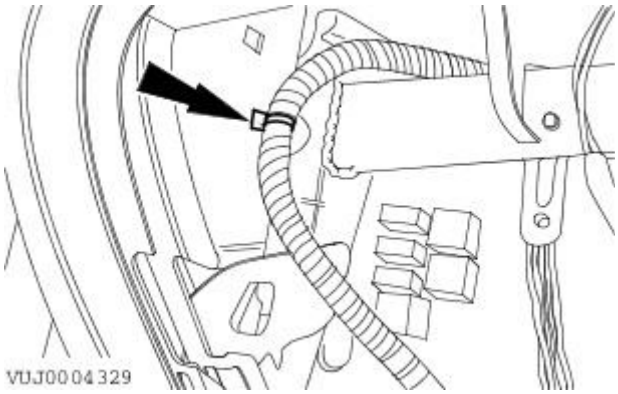

21. Detach the electrical harness.

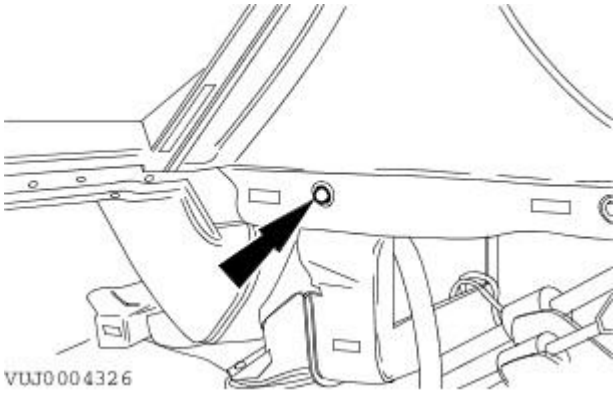

22. Remove the instrument panel retaining screw.

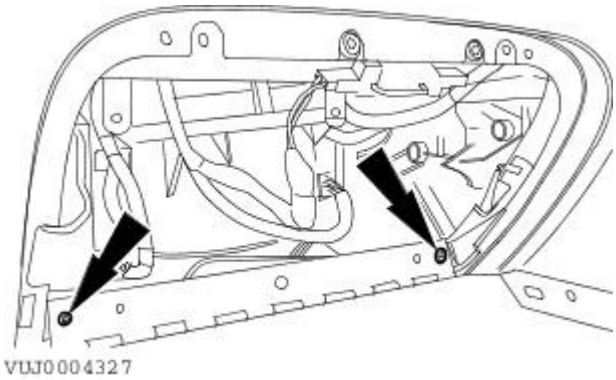

23. Remove the instrument panel retaining screws.

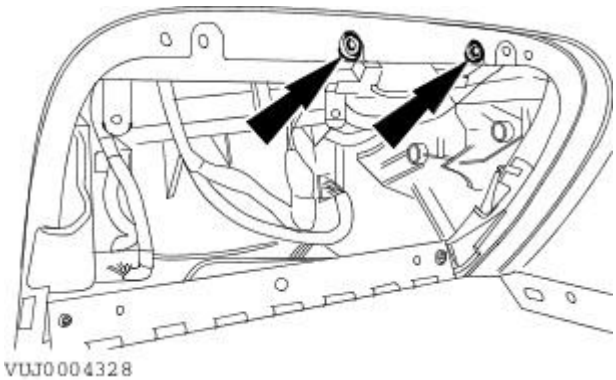

24. Remove and discard the pop rivets.

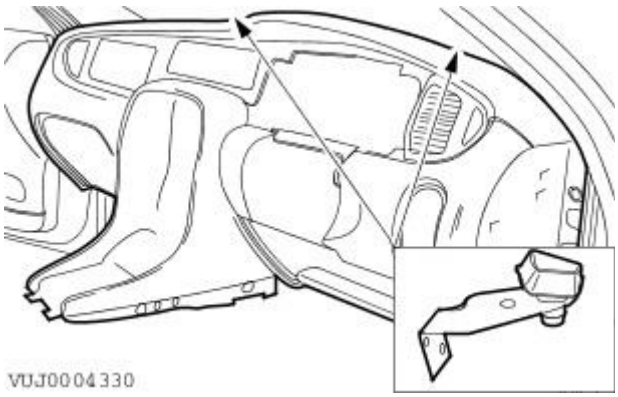

25. Remove the instrument panel.

Installation

1. To install, reverse the removal procedure.

Instrument Panel and Console - Overhead Console

Removal and Installation

Removal

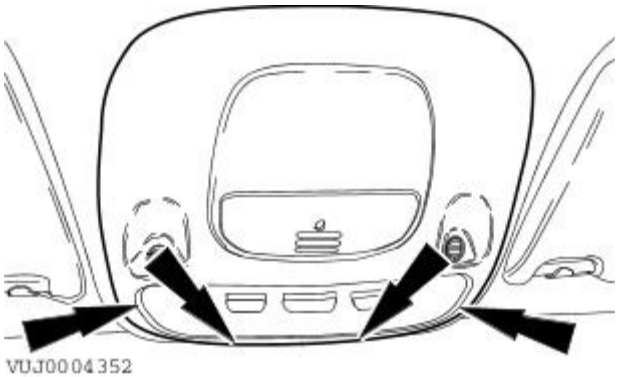

1. Detach the roof console.

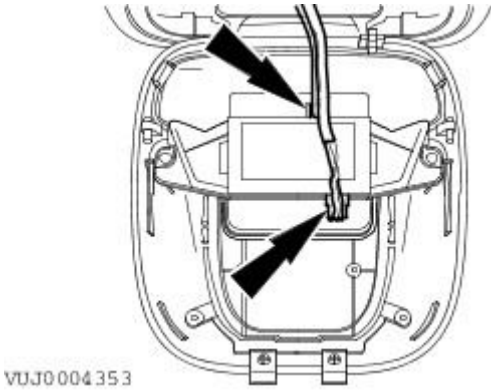

2. Remove the roof console.

- Disconnect the electrical connector(s).

Installation

1. To install, reverse the removal procedure.

Instrument Panel and Console - Overhead Console Switch Moulding

Removal and Installation

Removal

• NOTE: Some variation in the illustrations may occur, but the essential information is always correct.

1. Remove the overhead console.
For additional information, refer to: Overhead Console (501-12 Instrument Panel and Console, Removal and Installation).

2. NOTE: Where installed.

Remove the front intrusion sensor.

3. NOTE: Where installed.

Remove the garage door opener module.

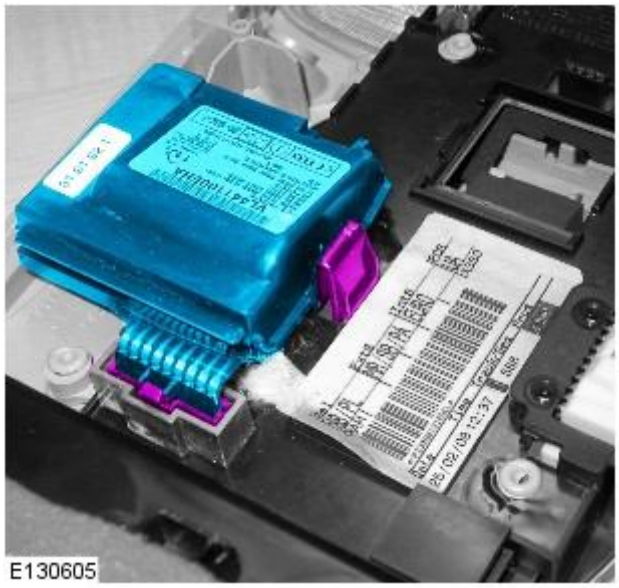

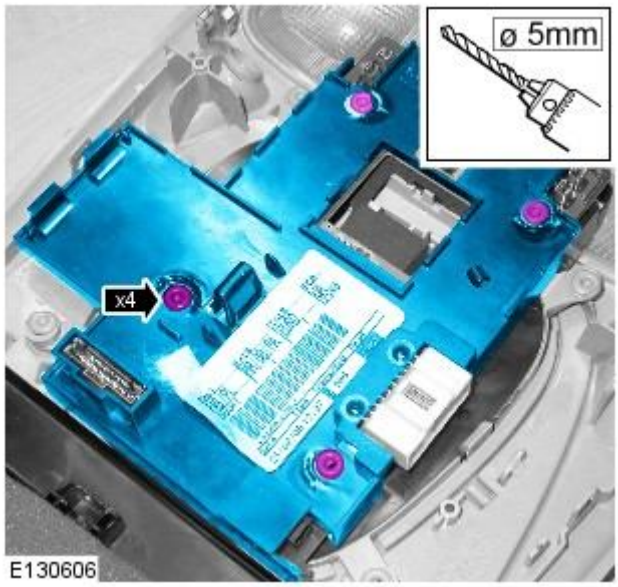

4. CAUTION: Make sure that only the head of the fixing is removed. Do not drill any deeper than necessary. Failure to follow this instruction may result in damage to the component.

Remove the printed circuit board (PCB) cover.

- Using a 5mm drill bit, carefully drill out and remove the 4 plastic fixing heads.

5. Remove the PCB.

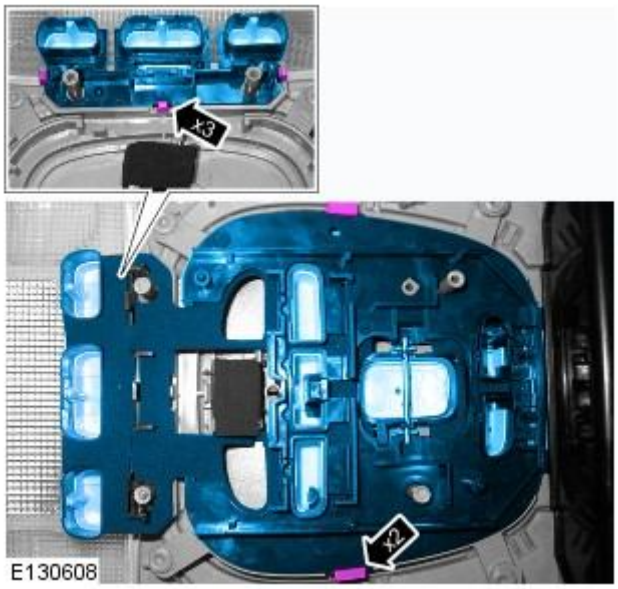

6. Remove the two switch mouldings.

7. Remove the foam pad.

E130609

8. Carefully remove sunroof rocker switch for reuse in the new rear switch moulding.

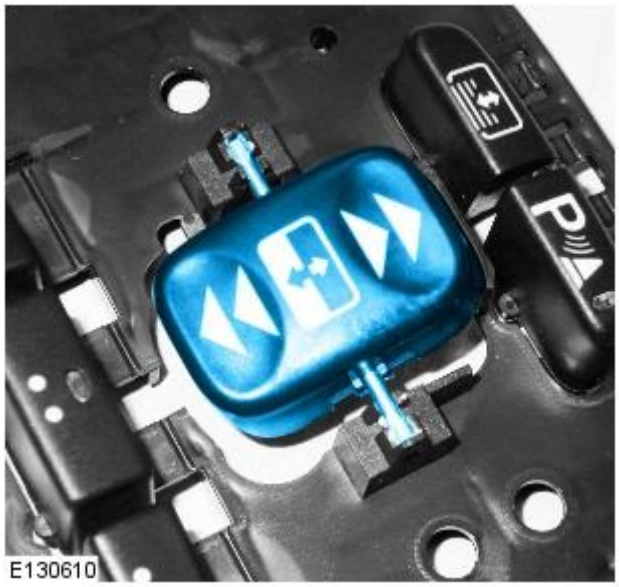
E130610

Installation

1. Select the correct switch moulding for the vehicle from the parts kit.
2. Remove any unnecessary switch buttons from the rear moulding using a suitable sharp knife. Take care not to remove any required switches.
3. Install the sunroof rocker switch.
4. Install the front switch moulding.
5. Install the foam pad.
6. Install the rear switch moulding.
7. Install the PCB.

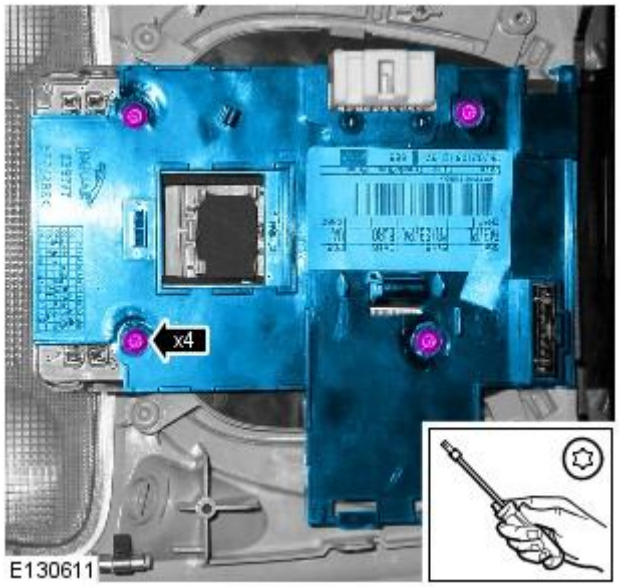

8. Install the cover.

- Install the 4 Torx screws
- Tighten to 1.5 Nm.

9. Install the garage door opener module.

10. Install the front intrusion sensor.

11. Install the overhead console.
For additional information, refer to: Overhead Console (501-12 Instrument Panel and Console, Removal and Installation).

Published: 11-May-2011

Handles, Locks, Latches and Entry Systems -

Torque Specifications

Description	Nm	lb-ft	lb-in
Door latch actuator retaining screws	7	-	62
Door latch striker retaining bolts	25	18	-
Door exterior handle retaining screws	5	-	44
Luggage compartment lid latch actuator retaining screws	10	-	89
Luggage compartment lid latch striker retaining bolts	25	18	-
Liftgate latch actuator retaining bolts	20	15	-
Liftgate window latch actuator retaining bolts	8	-	71
Rear window wiper pivot arm retaining nut	7	-	62
Rear wiper mounting arm retaining nuts	8	-	71
Liftgate window glass release switch retaining nut	9	-	80

Handles, Locks, Latches and Entry Systems - Handles, Locks, Latches and Entry Systems

Description and Operation

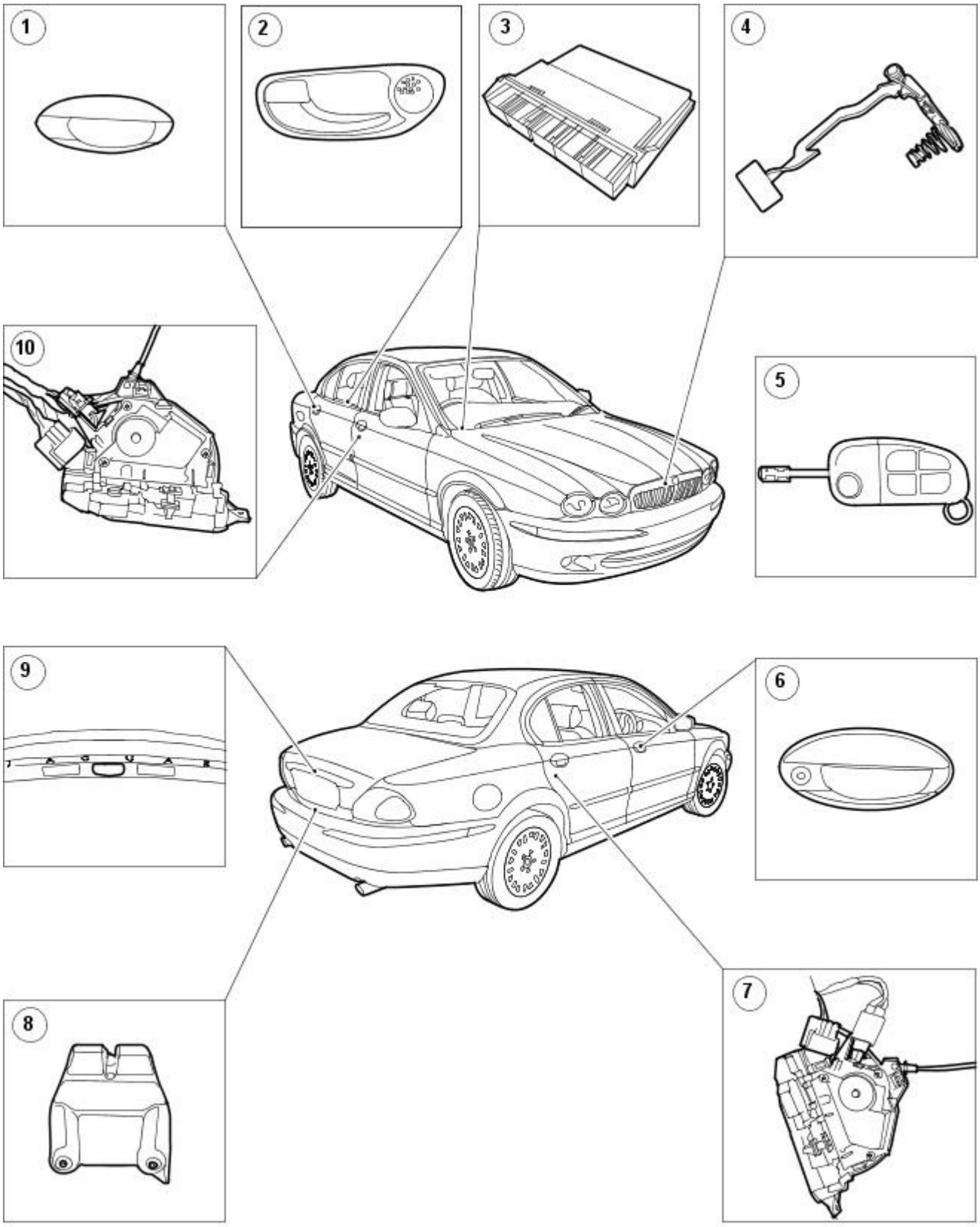

E45867

Item	Part Number	Description
1	—	Rear door exterior handle
2	—	Door interior handle
3	—	Generic electronics module (GEM)
4	—	Hood latch release handle
5	—	Integrated key remote entry transmitter
6	—	Front door exterior handle
7	—	Rear door latch and actuator
8	—	Luggage compartment lid latch and actuator
9	—	Luggage compartment release switch
10	—	Front door latch and actuator

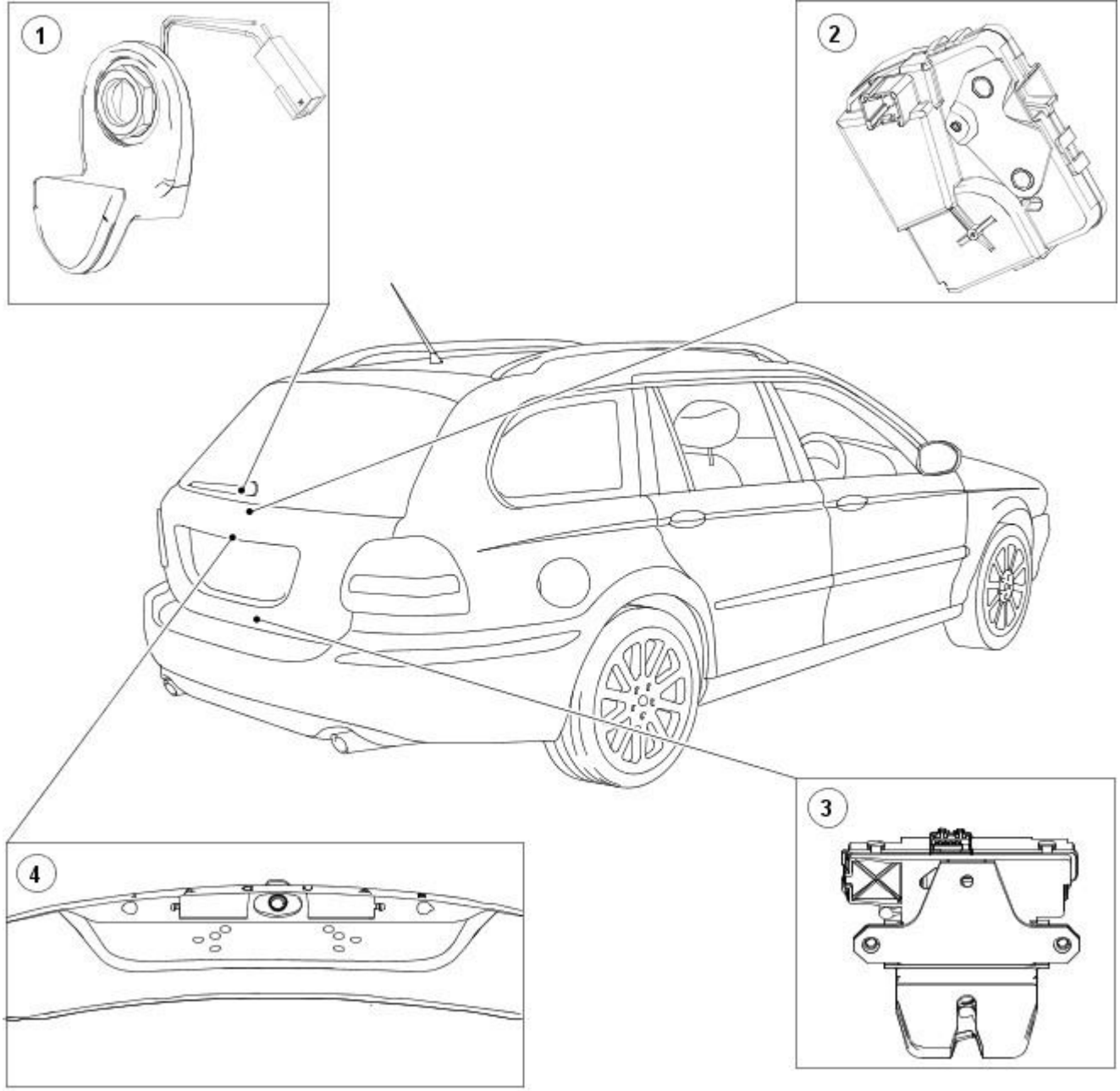

E48997

Item	Part Number	Description
1	-	Liftgate window glass release switch
2	-	Liftgate window latch actuator
3	-	Liftgate latch actuator
4	-	Liftgate release switch

For most markets excluding North America and Japan, the remote central locking system incorporates a double locking facility for optimum security. All locks use the Tibbe key system, using 6 elements and 4 cuts. The keys include 'in-key' transponders which are programmed to the vehicle engine immobilization system by using the Jaguar approved diagnostic system.

The central locking system employs single key access to the driver door, ignition switch and steering column lock.

When the vehicle is not locked, each door latch can be externally released by the corresponding exterior door handle which is operated by a single rod. When unlocked, or central locked, the door latches can also be released by the interior door handles, each of which are operated by a single cable. Operation of the front door interior handles will also unlock the rear doors. Use of the key in the driver door lock cylinder operates the lock by a short rod to provide locking of the door latch. This in turn locks all other doors and the luggage compartment through the central locking system. These locking functions can also be achieved by use of the integrated key remote entry transmitter.

For most markets, vehicles with 2.0L, 2.5L and 3.0L engines have a 'drive-away door locking' feature which automatically central locks all doors and the luggage compartment when the vehicle exceeds 7 km/h (4 mile/h).

Key operation

To central unlock or lock the vehicle, the key is inserted in the driver door lock cylinder, turned towards the front or rear of the vehicle respectively, and released. Holding the key in the lock position for 1.5 seconds will close all windows. Releasing the key stops all operations. Central locking of the vehicle locks all doors and the luggage compartment and sets the alarm system. In addition to all of the above functions, double locking prevents the doors opening from the interior. To 'double lock' the vehicle, the key is inserted in the driver door lock cylinder and turned to the unlock (forward) position, then within three seconds, turned to the lock (rearward) position and released. The same procedure is required to unlock a 'double locked' vehicle as with a central locked vehicle. The key is inserted in the driver door lock cylinder and turned to the unlock (forward) position. This function can also be activated using the remote transmitter.

If an attempt is made to lock the vehicle from either front doors through the driver or passenger interior door handles, when a door, hood or luggage compartment is ajar, will result in all doors being locked and then unlocked. If an attempt is made to lock the vehicle from either rear doors through the interior door handles, or when the hood, a door or the luggage compartment is ajar or open, will result in only that specific rear door to lock.

The fuel filler flap release lever is used to allow the driver to release the fuel filler flap from inside the vehicle. This function can be used at all times.

Keyless Entry

The integrated key remote transmitter operates the following functions:

- unlocking the driver door
- unlocking/locking all doors
- releasing the luggage compartment lid
- activate/deactivate the double locking
- arms/disarms the anti-theft alarm system, interior scanning system and the inclination sensor (if equipped)
- activates global closing
- deactivates a triggered alarm
- headlamp convenience
- remote panic alarm (standard on North American specification vehicles and as a dealer option in other markets)

Inputs and Outputs

The keyless entry/computer operated lock system receives inputs from the following:

- ignition switch (**ACC** and **ON** positions)
- door ajar switches
- hood switch
- luggage compartment switch
- remote transmitter

The Generic electronics module (GEM) distributes outputs to the following:

- door lock actuators
- double locking motors
- turn signals
- alarm horn
- luggage compartment latch
- power window motors for global closing

Transmitter, Keyless Entry Remote

The keyless entry/remote operated lock system is completely independent in function but fully integrated within the GEM. The remote control system consists of a transmitter and an antenna (radio frequency system).

The remote control transmitter for the radio frequency system will operate without the transmitter being directed at the vehicle. The normal range between the transmitter and the antenna will be up to 10 meters for the USA, Canada and the rest of the world. The normal range between transmitter and antenna will be up to five meters for the UK and Europe and three meters for Japan.

Before the remote control system can be used, each transmitter must be initialized to the vehicle. A maximum number of four transmitters can be initialized to any vehicle. All remote transmitters must be initialized at the same time.

The keyless entry/remote operated locks will not operate when the ignition key is in the ignition switch.

Locking and Unlocking

The remote transmitter is integrated into the key and contains four buttons (lock, unlock, trunk release, headlamp convenience). To operate the system:

Press the lock button once to activate the central locking system and the alarm system (if enabled).

Press the lock button twice within three seconds to activate the central locking system, double locking system, alarm system and the interior scanning system (if equipped).

Press the unlock button once to deactivate the double locking, the alarm system is deactivated and only the driver door is fully unlocked (this is programmable using the Jaguar approved diagnostic system or by pressing and holding the lock and unlock buttons simultaneously for 4 seconds, the direction indicators will then flash to show the change of status from single point entry to central unlock).

Pressing the unlock button twice within three seconds will unlock the remaining doors (this is programmable using the Jaguar approved diagnostic system).

Pressing the luggage compartment release button once releases the trunk. The vehicle must be unlocked and at vehicles speeds below 7 km/h (4 mile/h).

Press the headlamp convenience button once to activate the headlamp main beam function, press the headlamp convenience button again to deactivate the headlamp main beam function. This function will automatically deactivate after 30 seconds.

Press the headlamp convenience button three times within three seconds to activate the alarm, press the headlamp convenience button again three times within 3 seconds to deactivate the alarm.

Double Locking

Double locking prevents the interior door handles from unlocking the door.

Double locking is activated by turning the key in the driver door lock to the unlock position and then to the lock position within three seconds or by pressing the lock button twice within three seconds on the remote transmitter.

Successful double locking is indicated by the turn signals flashing twice, one short flash followed by a long flash.

Double locking will be inhibited if the GEM senses the hood, a door or the luggage compartment is ajar or open. The GEM receives its input from the door ajar switches.

If the vehicle battery becomes discharged after the double locking has been activated, opening the drivers door with the key will mechanically deactivate the double locking on the drivers door only.

Handles, Locks, Latches and Entry Systems - Locks, Latches and Entry Systems

Diagnosis and Testing

Inspection and Verification

1. **1.** Verify the customer concern.
2. **2.** Visually inspect for obvious signs of mechanical or electrical damage.

Visual Inspection Chart

Mechanical	Electrical
• Door locks • Latch(es) • Handle(s) • Rods/linkages	• Electrical connector(s) • Wiring harness for damage or corrosion • Relay(s) • Module (GEM) • Actuator(s)

3. **3.** If an obvious cause for an observed or reported concern is found, correct the cause (if possible) before proceeding to the next step.

• NOTE: Check frequently asked questions 4461 prior to door latch replacement.

• NOTE: Key transmitters will not operate if the key is in the ignition switch.

• NOTE: Carry out the checks in the table and pinpoint tests before installing a new latch.

Symptom Chart

Symtom (General)	Symptom (Specific)	Possible Source	Action
The car or a door fails to lock	The car or a door fails to lock from a transmitter	• A door luggage compartment lid or hood is ajar • Transmitter battery • Signal failure • Latch motor failure(s)	For transmitter tests, GO to Pinpoint Test A. .
	Drive away locking does not function	• Function disabled • Signal failure • Latch motor failure(s)	Check the central locking function using the transmitter. If this functions correctly, check that the drive away locking function is enabled using the Jaguar approved diagnostic system. Carry out a system test using the Jaguar approved diagnostic system.
	The car or a door fails to lock from a key	• Linkage rod disconnected/damaged • Lock barrel operating lever disconnected/damaged • Latch motor failure(s)	Check for resistance when the key is operated, remove the suspect door casing and examine the components listed.
	The car or a door fails to lock from the interior paddle(s)	• Cable disconnected/damaged • Locking paddle damaged • Latch motor failure(s)	Remove the suspect door casing and examine the components listed.
The car or a door fails to unlock	The car or a door fails to unlock from a transmitter	• Transmitter battery • Signal failure • Latch motor failure(s)	For transmitter tests, GO to Pinpoint Test A. , carry out a system test using the Jaguar approved diagnostic system.
	The car or a door fails to unlock from a key	• Linkage rod disconnected/damaged • Lock barrel operating lever disconnected/damaged • Latch motor failure(s)	Check for resistance when the key is operated, remove the suspect door casing and examine the components listed.
	The car or a door fails to unlock from the interior paddle(s)	• Double locking engaged • Cable disconnected/damaged • Locking paddle damaged • Latch motor failure(s) • Incorrect interior door handle fitted	Check that the vehicle is not double-locked. Remove the suspect door casing and examine the components listed. Check that the paddles work when the interior release is pulled (Federal vehicles, front doors only). Check that a double-locking latch is not fitted to a central lock specification vehicle.
	The car or a door fails to unlock from a **rear** interior paddle	• Double locking engaged • Child locks engaged • Cable disconnected/damaged • Locking paddle damaged • Latch motor failure(s)	Check that the vehicle is not double-locked. Check the child lock engagement (see owner's handbook). Remove the suspect door casing and examine the components listed.
Door fails to latch fully (does not stay closed)	Door ajar	• Pawl fails to latch • Striker is too far inboard	Check the pawl operation with the door open, if the pawl fails to latch fully, install a new latch. Check/adjust the striker(s)
Door(s) difficult to open	An individual door is difficult to open from the exterior handle	• Striker adjustment • Operating rod disconnected/damaged • Pawl sticking	Check the adjustment of the striker(s), remove the suspect door casing and inspect the operating linkage. Check the pawl for correct operation.
	An individual door is difficult to open from the interior handle	• Striker adjustment • Operating cable disconnected/damaged • Pawl sticking	Check the adjustment of the striker(s), remove the suspect door casing and inspect the operating linkage. Check the pawl for correct operation.

Symtom (General)	Symptom (Specific)	Possible Source	Action
Door(s) fail to open	An individual door fails to open from the exterior handle	• Exterior release handle failure • Operating rod disconnected/damaged • Pawl sticking	Check the pawl for correct operation. Check if the door opens from the interior handle. Remove the suspect door casing and inspect the operating linkage (pay particular attention to the linkage clips).
	An individual door fails to open from the interior handle	• Double locking engaged • Interior release handle failure • Operating cable disconnected/damaged • Pawl sticking • Wrong interior handle fitted	Check that the vehicle is not double-locked. Check the pawl for correct operation. Check if the door opens from the exterior handle. Remove the suspect door casing and inspect the operating linkage. Check that the interior paddle operates when the interior release is pulled (Federal vehicles only).
	An individual **rear** door fails to open from the interior handle	• Double locking engaged • Child locks engaged • Interior release handle failure • Operating cable disconnected/damaged • Pawl sticking	Check that the vehicle is not double-locked. Check the child lock engagement (see owner's handbook). Check the pawl for correct operation. Check if the door opens from the exterior handle. Remove the suspect door casing and inspect the operating linkage.
Vehicle locks without request	The vehicle locks without the transmitter or key being operated	• Locking barrel operating lever or linkage rod is disconnected • Latch failure	Check that the lock functions with a key. If the system locks/unlocks normally with a key, carry out a system test using the Jaguar approved diagnostic system.
Vehicle unlocks without request	The vehicle unlocks without the transmitter or key being operated	• Locking barrel operating lever or linkage rod is disconnected • Latch failure	Check the lock function with a key. If the system locks/unlocks normally with a key, carry out a system test using the Jaguar approved diagnostic system.

Pinpoint Tests

PINPOINT TEST A : CAR OR DOOR FAILS TO LOCK FROM A TRANSMITTER	
• NOTE: Make sure all transmitters are available before testing.	
TEST CONDITIONS	**DETAILS/RESULTS/ACTIONS**
A1: CHECK TRANSMITTER FUNCTION	
	1 Operate the remote headlight function with the transmitter.
	Do the headlights operate? **Yes** GO to A2. **No** REPEAT the test with the spare transmitters. If none of the transmitters function, GO to A2. . If spare transmitters function correctly, check/replace the battery in the suspect transmitter.
A2: CHECK THE LOCKING FUNCTION WITH THE KEY	
	1 Operate the lock with the key.
	Does the central locking function correctly? **Yes** CARRY OUT transmitter tests using the Jaguar approved diagnostic system. **No** GO to A3.
A3: CHECK THE MECHANICAL FUNCTION OF THE LOCK	
	1 Operate the lock with a key.
	Is resistance felt when turning the key? **Yes** GO to A4. **No** REMOVE the door casing and check the linkage rod connection from lock barrel to latch.
A4: CHECK THE FUNCTION OF THE INTERIOR LOCKING PADDLES	
	1 Operate the lock with a key.
	2 Observe the operation of the interior locking paddles whilst operating the key.
	Do all the interior operating paddles move freely? **Yes** CARRY OUT functional tests using the Jaguar approved diagnostic system. **No** GO to A5.
A5: CHECK LATCH FUNCTION (CLOSED)	
	1 Check that all the doors, luggage compartment and hood are firmly latched.
	Do all the doors, luggage compartment and hood latch correctly? **Yes** CARRY OUT functional tests using the Jaguar approved diagnostic system. **No** GO to A6.
A6: CHECK LATCH FUNCTION (OPEN)	
	1 Fully open whichever of the body openings did not latch correctly.
	2 Manually operate the body opening pawl.
	Does the body opening pawl latch correctly? **Yes** CHECK and adjust the body opening striker. Recheck for correct latching with the door closed. **No** GO to A7.
A7: CHECK THE INTERIOR LOCKING PADDLE CABLES	
	1 Remove the door casing and check interior locking cable(s) for connection/damage.

	Are any of the cables disconnected or damaged? **Yes** RECTIFY as necessary. For additional information, refer to removal and installation in this section. **No** CARRY OUT functional tests using the Jaguar approved diagnostic system.

Handles, Locks, Latches and Entry Systems - Remote Transmitter Programming

General Procedures

1. NOTE: All remote transmitters are programmable and must be programmed at the same time.

• NOTE: If an attempt is made to program a fifth remote transmitter after four remote transmitters have already been programmed, the generic electronic module (GEM) will exit the remote transmitter learn mode. If the remote transmitter learn mode is entered again, the attempt shall erase all remote entry device associations and start a new set of four remote entry device associations with this fifth remote transmitter programming attempt.

The complexity of the electronics involved with the remote keyless entry, of which the GEM is a part, and the multiplexed communication network which are connected to it, exclude the use of workshop general electrical test equipment. Therefore, reference should be made to the Jaguar Approved Diagnostic System for programming the remote transmitters.

Handles, Locks, Latches and Entry Systems - Exterior Front Door Handle

Removal and Installation

Removal

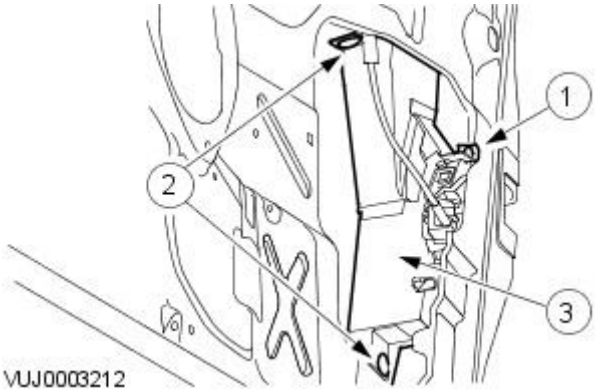

1. Remove the front door window glass.
   For additional information, refer to: Front Door Window Glass (501-11 Glass, Frames and Mechanisms, Removal and Installation).
2. Remove the front door security shield.
   1. Remove the retaining screw.
   2. Remove and discard the retaining clips.
   3. Remove the front door security shield.

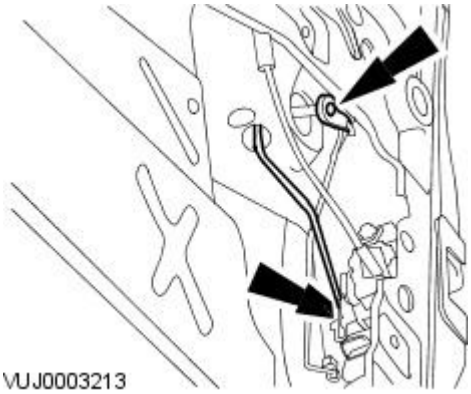

3. Disconnect the front door exterior handle connecting rod and the door lock cylinder connecting rod.

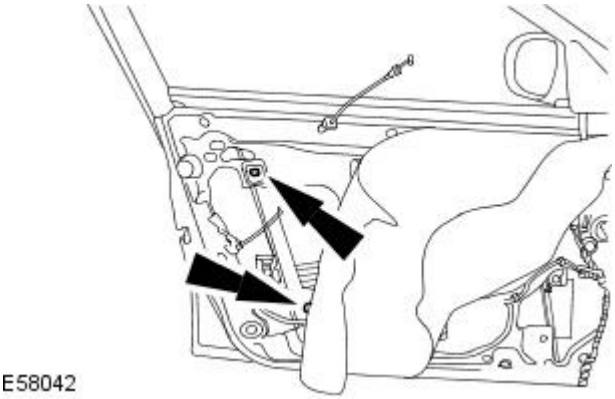

4. Remove the front door motor and window regulator upper and lower rear securing scews.

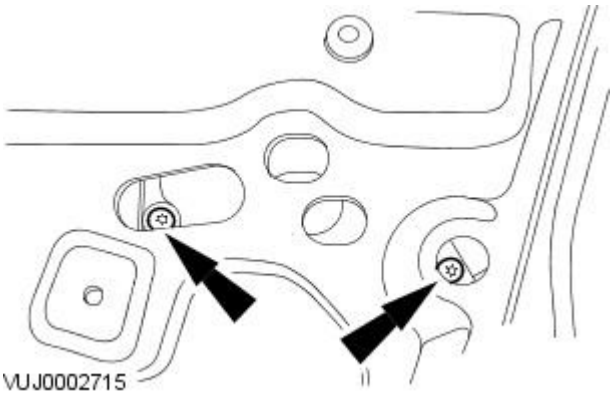

5. Remove the front door exterior handle retaining screws.

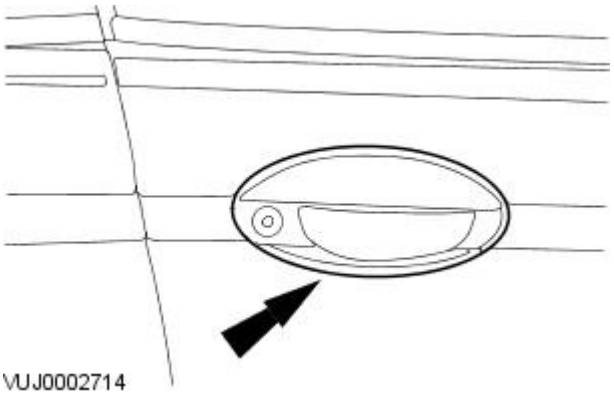

6. Remove the front door exterior handle.

Installation

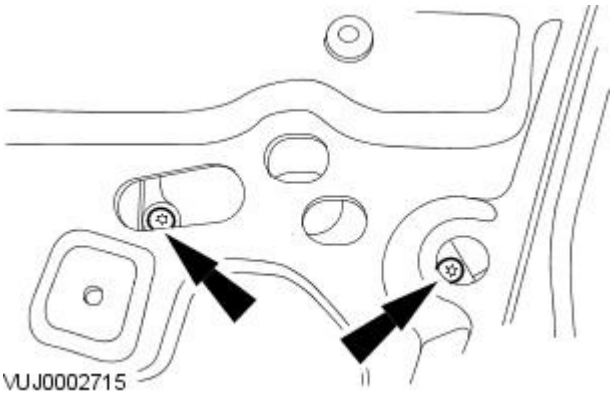

1. NOTE: Install new front door security shield retaining clips.

To install, reverse the removal procedure.

- Tighten to 5 Nm.

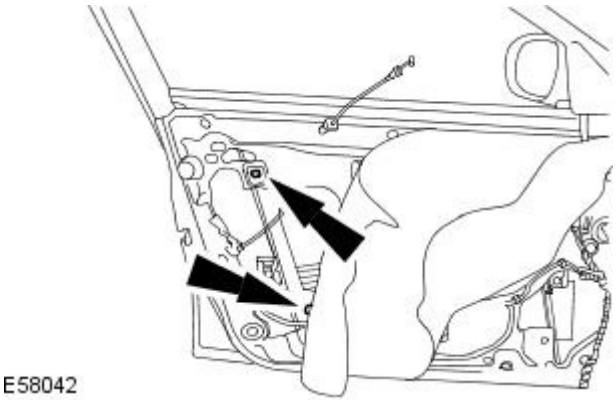

2. Tighten to 7 Nm.

Handles, Locks, Latches and Entry Systems - Front Door Lock Actuator

Removal and Installation

Removal

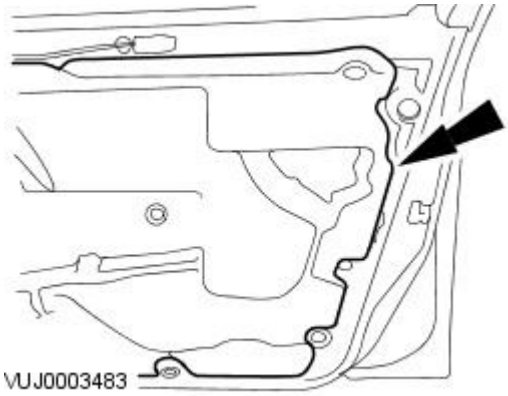

1. Remove the front door trim panel. For additional information, refer toSection 501-05 Interior Trim and Ornamentation.

2. CAUTION: Do not touch the adhesive surface as re-bonding will be impaired.

Peel back the weathershield.

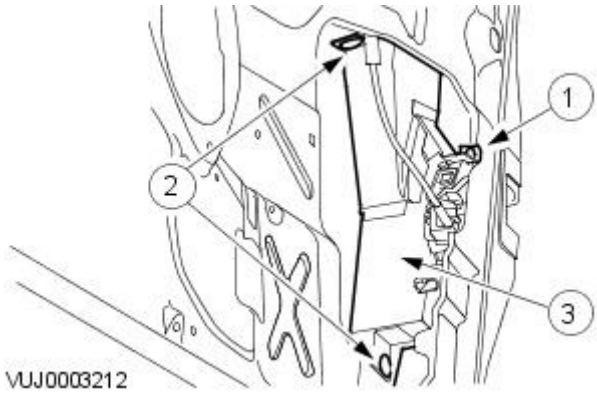

3. Remove the door security shield.

1. Remove the retaining screw.
2. Remove and discard the retaining clips.
3. Remove the door security shield.

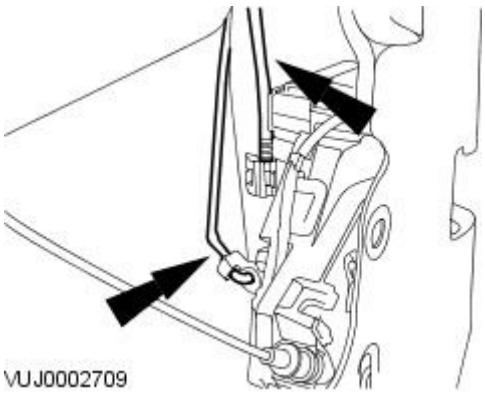

4. Disconnect the front door exterior handle connecting rod and the door lock cylinder connecting rod.

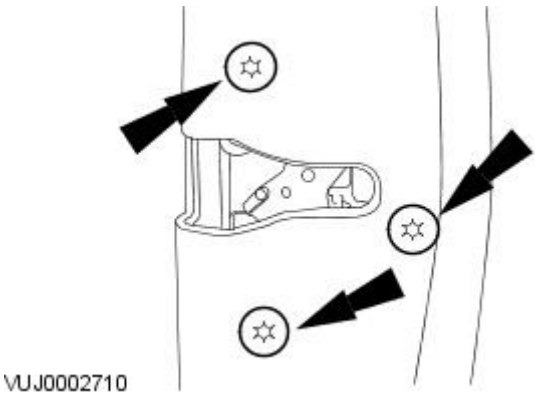

5. Detach the front door latch.

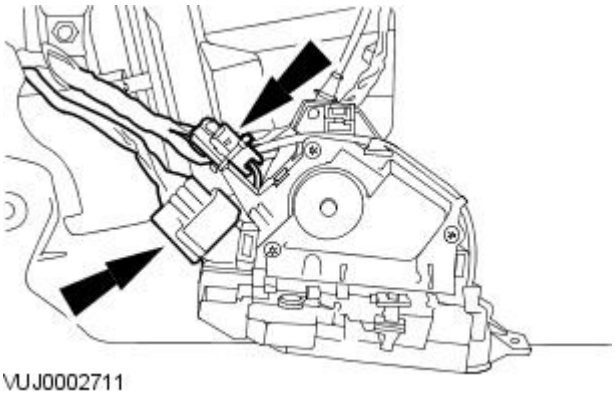

6. Disconnect the front door latch actuator electrical connectors.

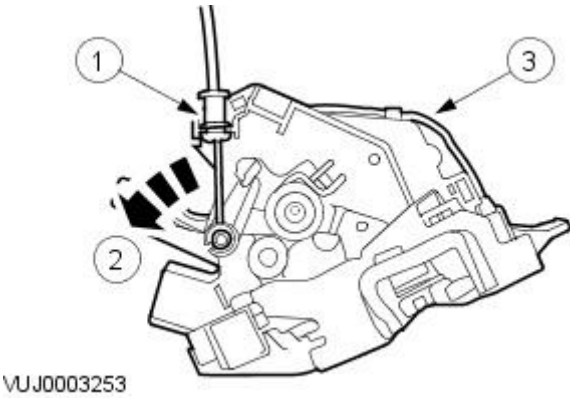

7. Remove the front door latch actuator.

1. Detach the front door latch actuator release cable.
2. Disconnect the front door latch actuator release cable.
3. Remove the front door latch actuator.

Installation

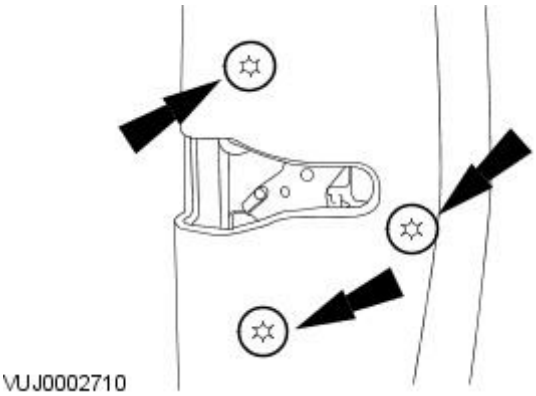

1. NOTE: Install new front door security shield retaining clips.

To install, reverse the removal procedure.

- Tighten to 7 Nm.

Handles, Locks, Latches and Entry Systems - Front Door Lock Cylinder

Removal and Installation

Removal

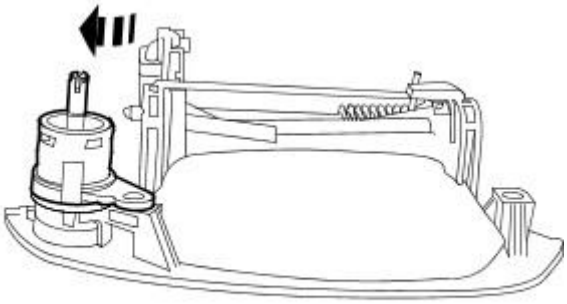

VUJ0002708

1. Remove the front door exterior handle. For additional information, refer to Handle—Front Door Exterior.
2. Remove the door lock cylinder.

Installation

1. To install, reverse the removal procedure.

Handles, Locks, Latches and Entry Systems - Fuel Filler Door Release Handle and Cable4-Door

Removal and Installation

Removal

• NOTE: The procedure shown is for LHD vehicles. The procedure is similar for RHD vehicles.

All vehicles

1. Remove the rear seat cushion.
For additional information, refer to: Rear Seat Cushion (501-10 Seating, Removal and Installation).

2. Remove the rear seat bolster cushion.
For additional information, refer to: Rear Seat Bolster - 4-Door (501-10 Seating, Removal and Installation).
.

3. Remove the driver side front scuff plate trim panel.
For additional information, refer to: Front Scuff Plate Trim Panel (501-05 Interior Trim and Ornamentation, Removal and Installation).
.

4. Remove the driver side rear scuff plate trim panel.
For additional information, refer to: Rear Scuff Plate Trim Panel (501-05 Interior Trim and Ornamentation, Removal and Installation).

5. Reposition the floor covering to one side.

1. Lift the fuel filler door release handle.
2. Reposition the floor covering to one side.

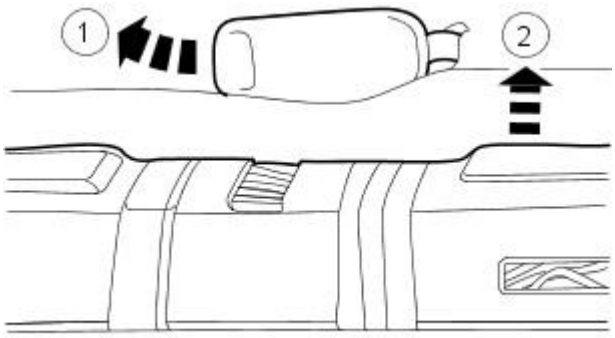

VUJ0003487

6. Detach the fuel filler door release handle and cable.

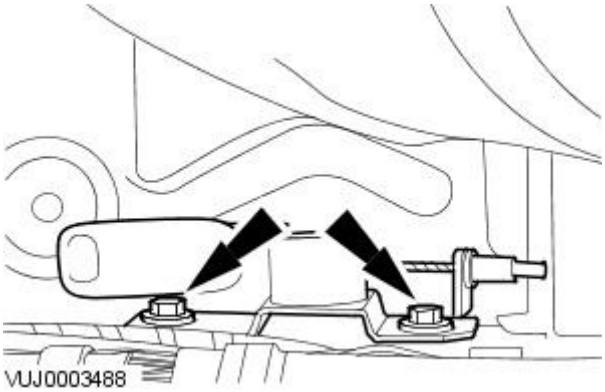
VUJ0003488

7. Remove the fuel filler door release handle.

1. Detach the fuel filler door release cable.
2. Rotate the fuel filler door release cable counter clockwise.
3. Remove the fuel filler door release handle.

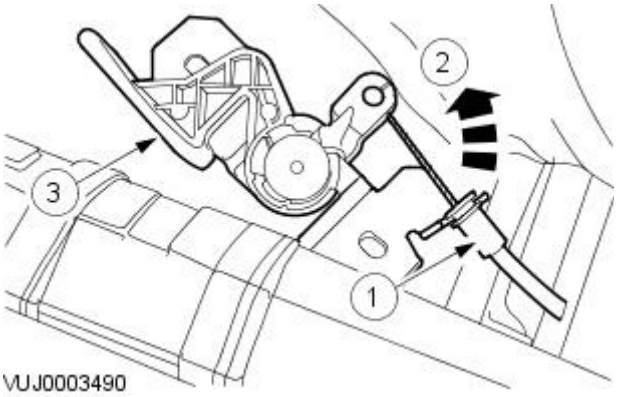

VUJ0003490

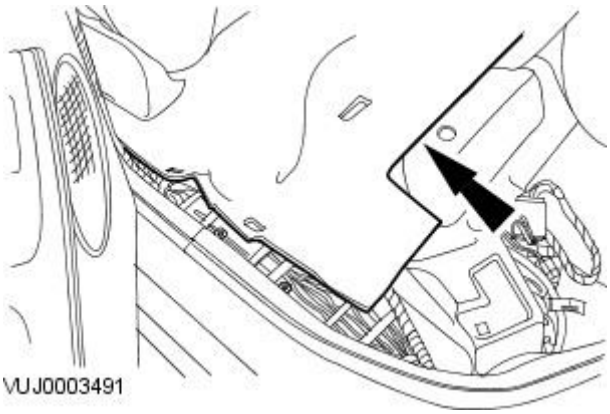

8. Reposition the floor covering to one side.

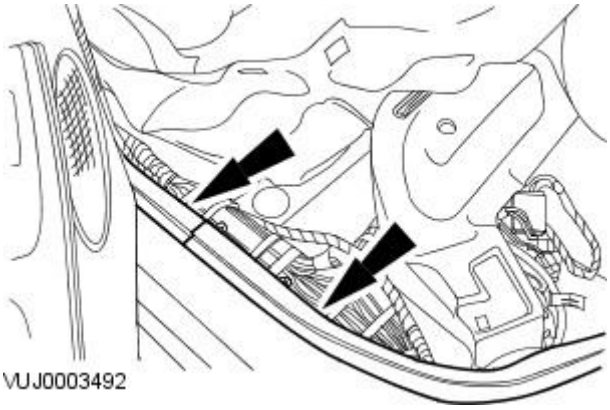

9. Detach the rear door opening weatherstrip and position to one side.

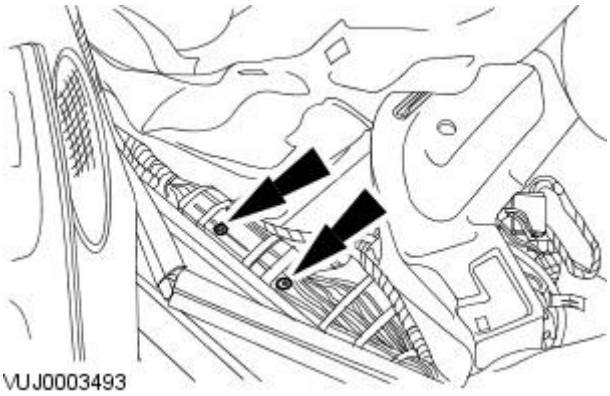

10. Reposition the wiring harness to one side.

- Loosen the retaining screws.

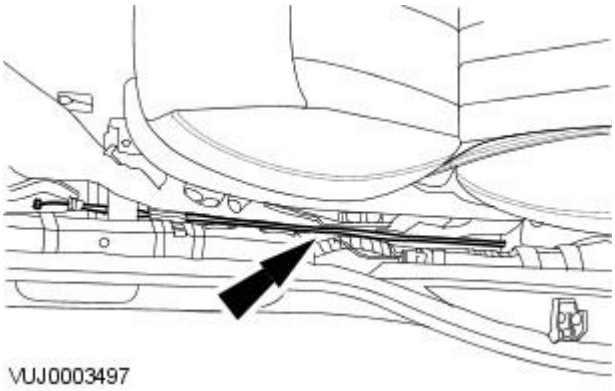

11. Detach the fuel filler door release cable.

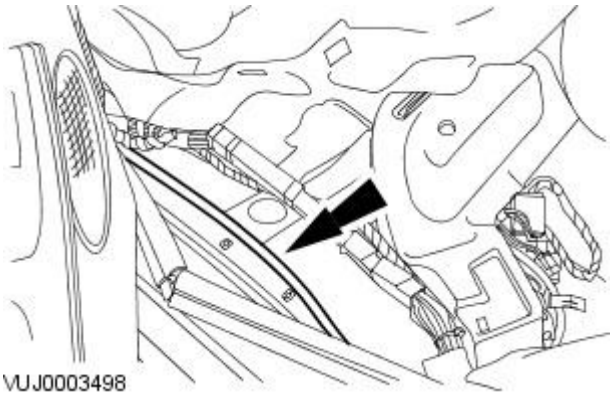

12. Detach the fuel filler door release cable.

Vehicles built up to VIN:J38978

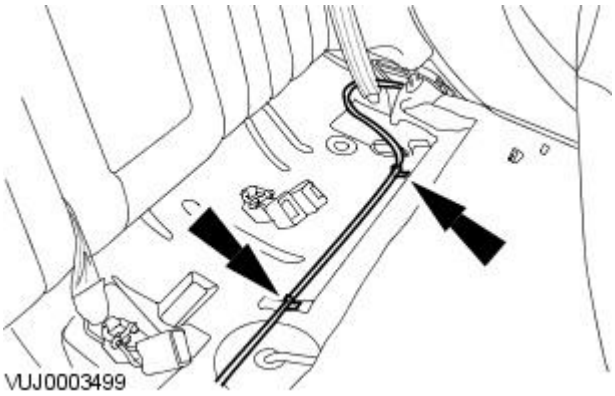

13. Detach the fuel filler door release cable.

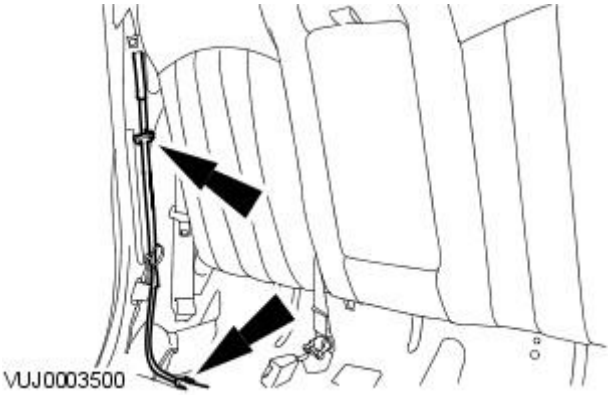

14. Detach the fuel filler door release cable.

Vehicles built from VIN:J38979

15. Remove the luggage compartment floor covering.

16. Detach and reposition the LH rear quarted trim panel.

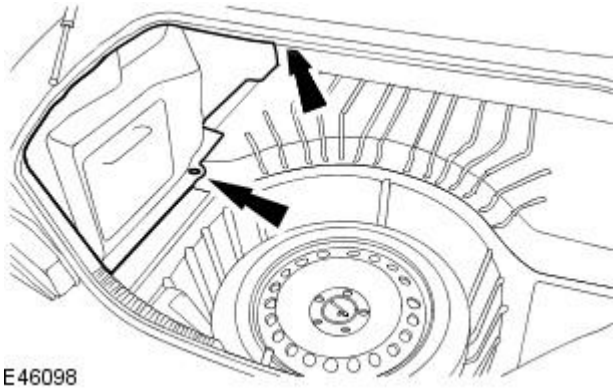

17. Remove the rear panel.

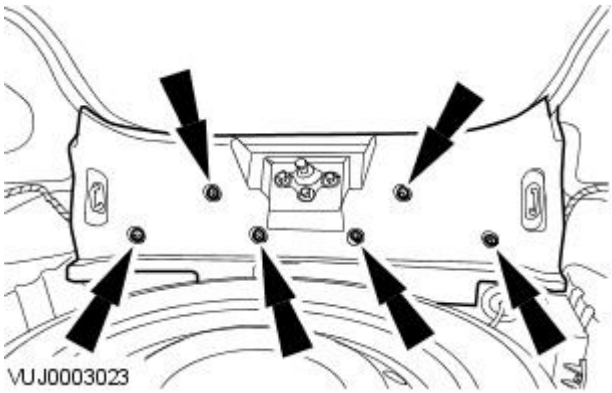

18. Detach the fuel filler door release cable.

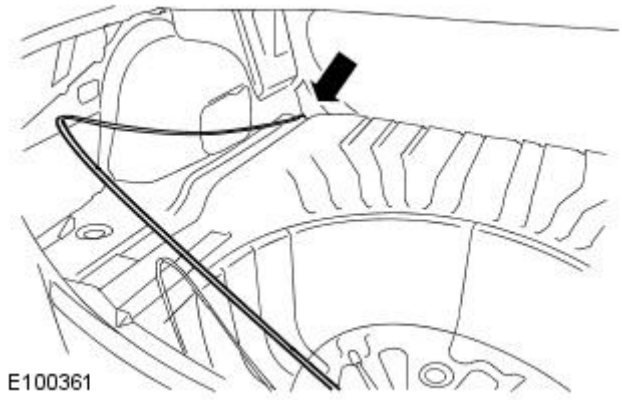

19. Detach the fuel filler door release cable.

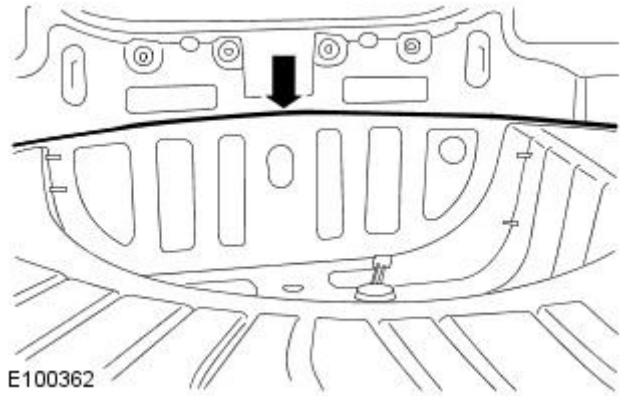

All vehicles

20. Detach and reposition the RH rear quarter trim panel.

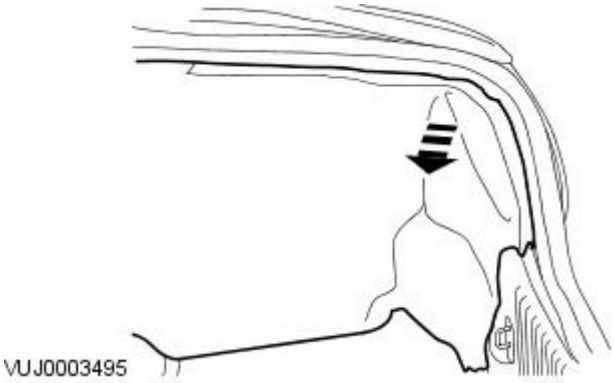

21. Remove the fuel filler door release cable.

1. Rotate the fuel filler door release cable clockwise.
2. Remove the fuel filler door release cable.

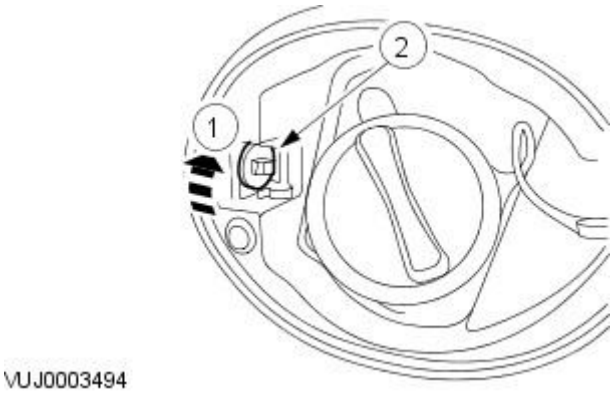

Installation

1. To install, reverse the removal procedure.

Handles, Locks, Latches and Entry Systems - Fuel Filler Door Release Handle and CableWagon

Removal and Installation

Removal

1. Remove the rear seat cushion.
   For additional information, refer to: Rear Seat Cushion (501-10 Seating, Removal and Installation).
2. Remove the rear seat bolster.
   For additional information, refer to: Rear Seat Bolster - Wagon (501-10 Seating, Removal and Installation).
3. Remove the driver front scuff plate trim panel.
   For additional information, refer to: Front Scuff Plate Trim Panel (501-05 Interior Trim and Ornamentation, Removal and Installation).
4. Remove the driver rear scuff plate trim panel.
   For additional information, refer to: Rear Scuff Plate Trim Panel (501-05 Interior Trim and Ornamentation, Removal and Installation).
5. Remove the loadspace trim panel.
   For additional information, refer to: Loadspace Trim Panel (501-05 Interior Trim and Ornamentation, Removal and Installation).
6. Remove the right-hand front retaining hook.

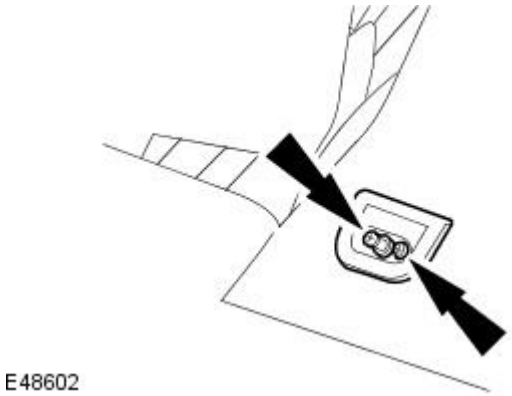

E48602

7. Detach the right-hand loadspace side trim panel.

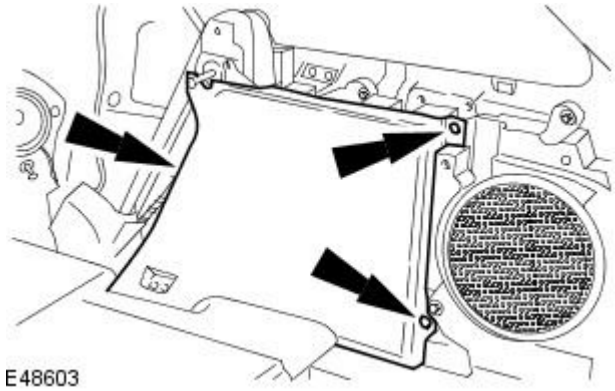

E48603

8. Remove the right-hand loadspace trim panel.

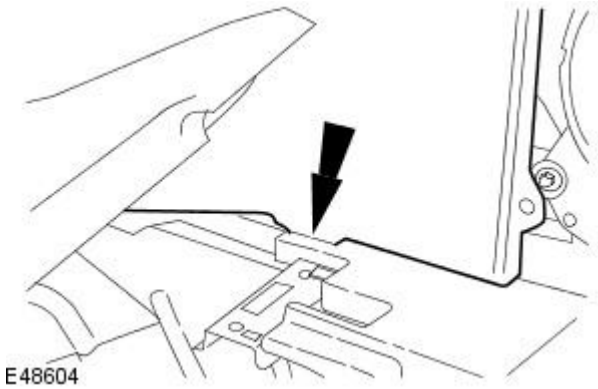

E48604

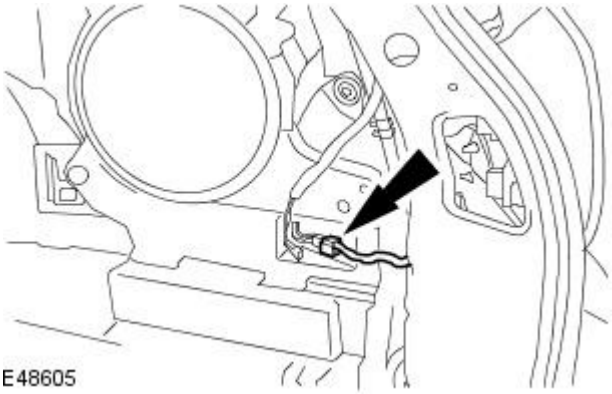

9. Disconnect the subwoofer enclosure electrical connector (if equipped).

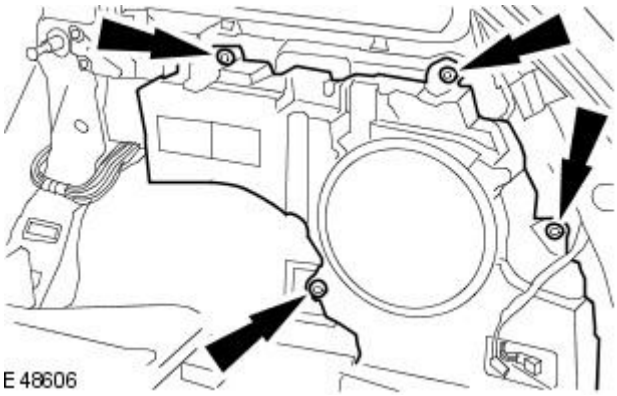

10. Remove the subwoofer enclosure (if equipped).

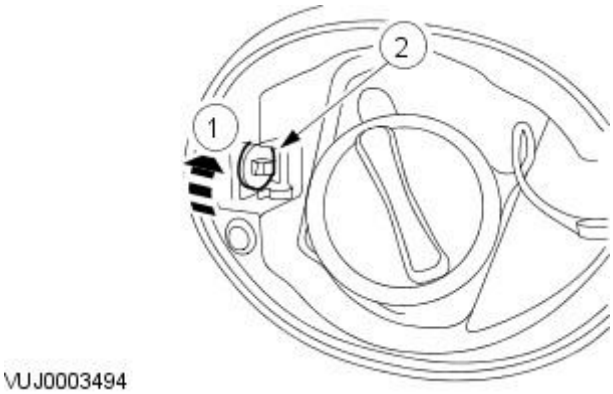

11. Detach the fuel filler door release cable.

1. Rotate the fuel filler door release cable clockwise.
2. Detach the fuel filler door release cable.

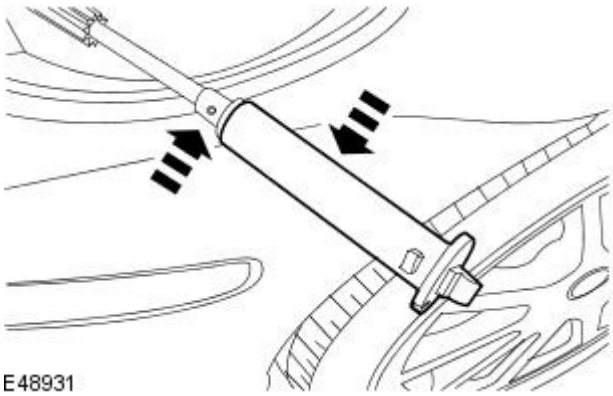

12. Remove the fuel filler door latch retainer.

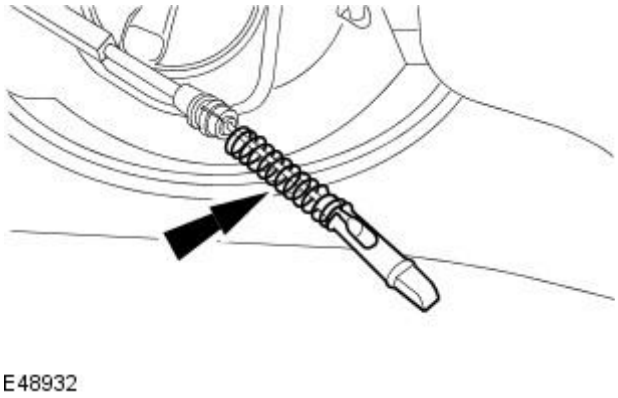

13. Remove the fuel filler door latch and spring.

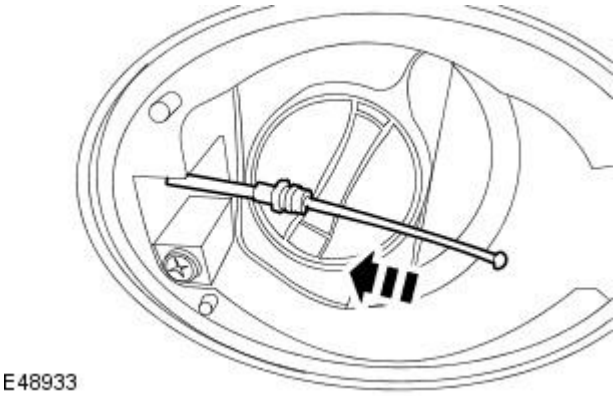

14. Reposition the cable through the boot.

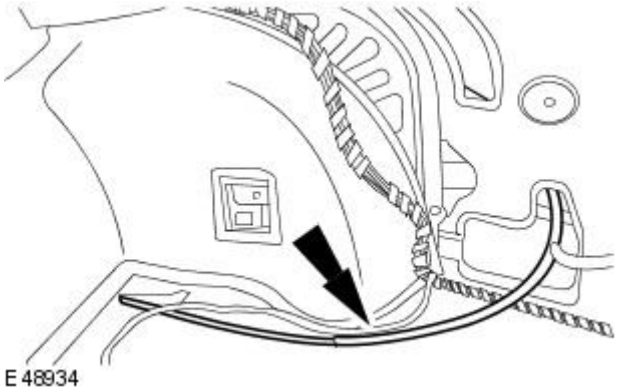

15. NOTE: To aid installation, note the routing of the fuel filler door release cable.

Detach fuel filler door release cable.

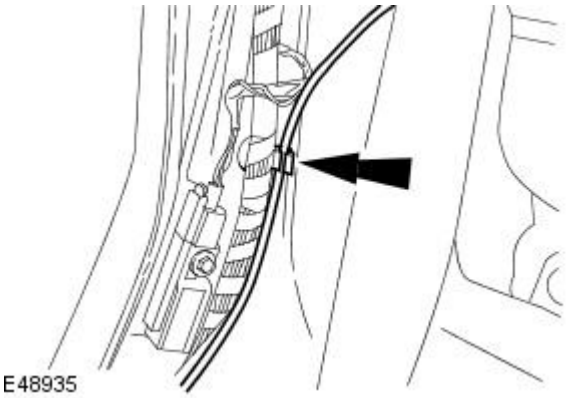

16. Detach fuel filler door release cable.

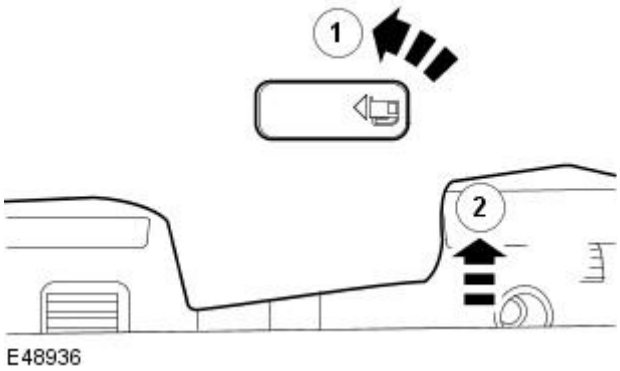

17. Reposition the floor covering to one side.

1. Lift the fuel filler door release handle.
2. Reposition the floor covering to one side.

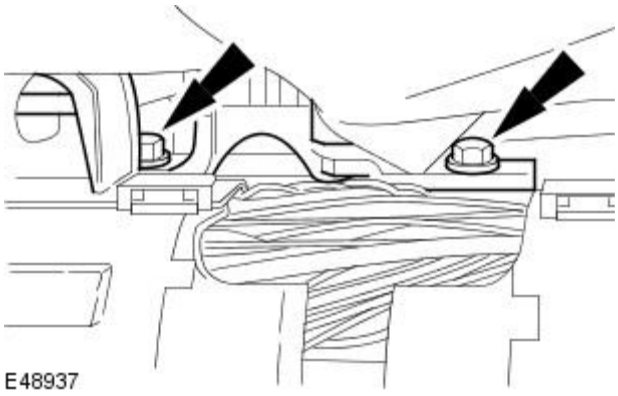

18. Detach the fuel filler door release handle and cable.

19. Remove the fuel filler door release handle.

1. Detach the fuel filler door release cable from the handle.
2. Remove the fuel filler door release handle.

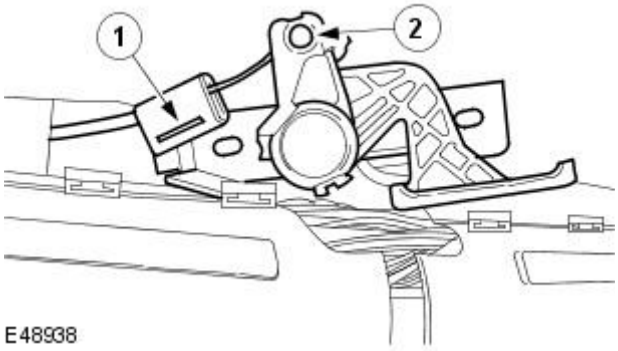

20. NOTE: To aid installation, note the routing of the fuel filler door release cable.

Remove the fuel filler door release cable.

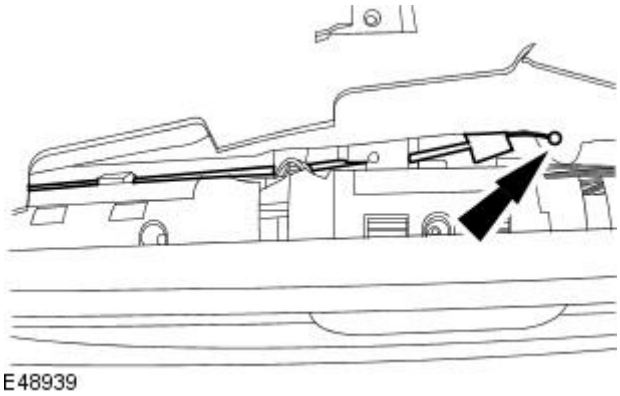

Installation

1. To install, reverse the removal procedure.

Handles, Locks, Latches and Entry Systems - Liftgate Latch Actuator

Removal and Installation

Removal

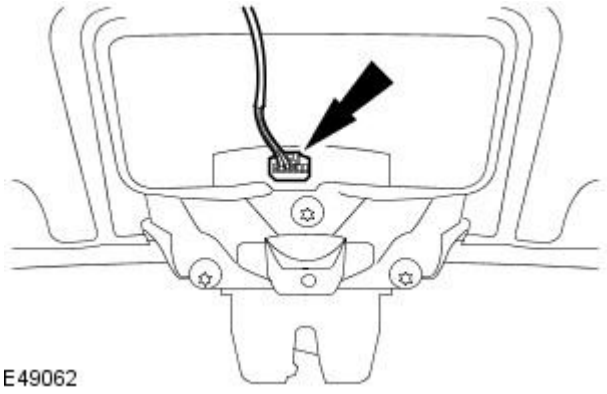

1. Remove the tailgate trim panel.
   For additional information, refer to: Liftgate Trim Panel (501-05 Interior Trim and Ornamentation, Removal and Installation).
2. Disconnect the liftgate latch actuator electrical connector.

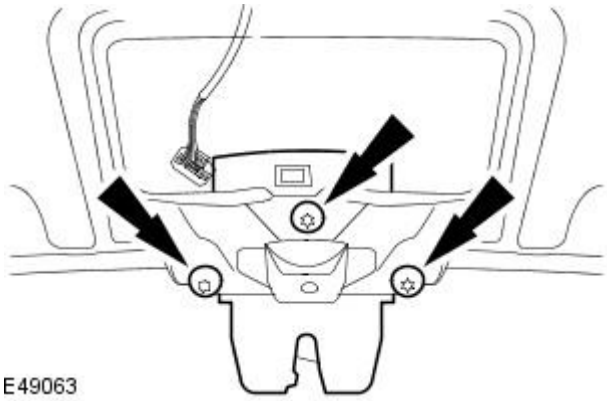

3. Remove the liftgate latch actuator.

Installation

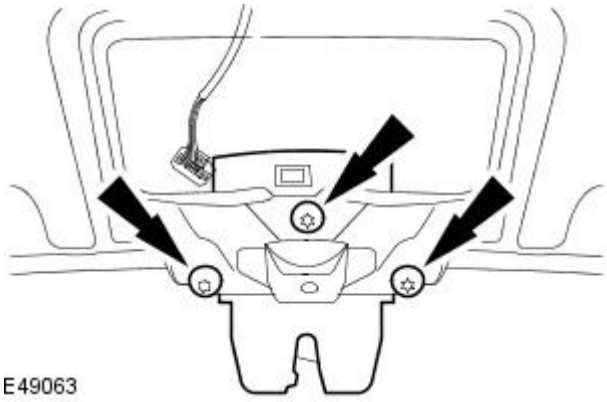

1. To install, reverse the removal procedure.

   1. Tighten to 20 Nm.

Handles, Locks, Latches and Entry Systems - Liftgate Window Glass Release Switch

Removal and Installation

Removal

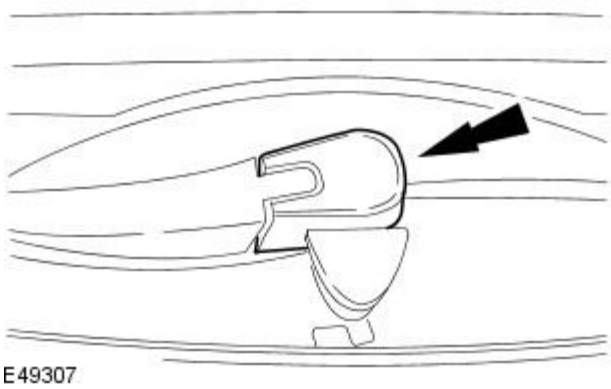

E49307

1. Remove the rear window wiper pivot arm retaining nut cover.

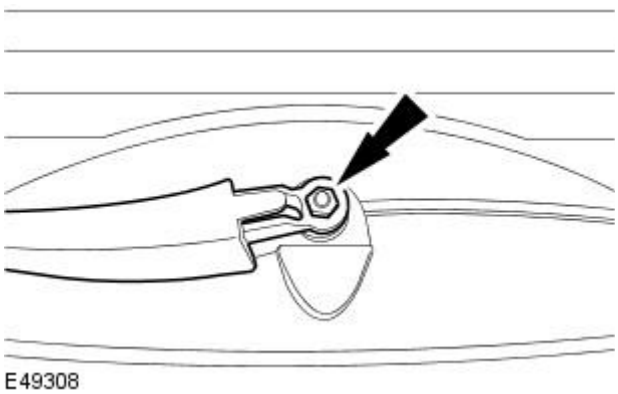

E49308

2. Remove the rear window wiper pivot arm.

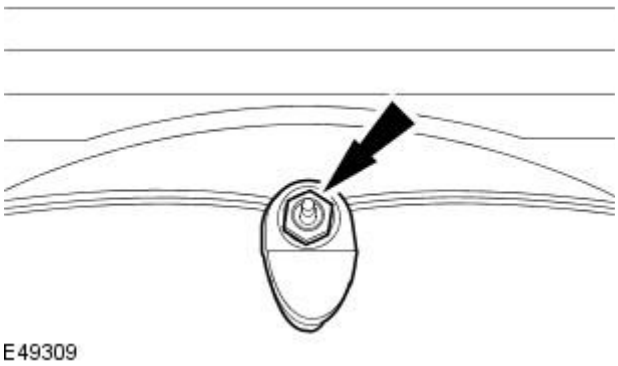

E49309

3. Remove the liftgate window glass release switch retaining nut.

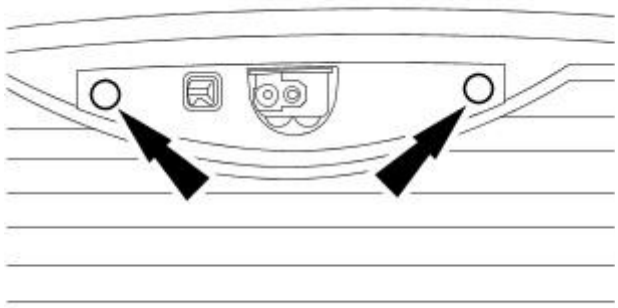

E49310

4. Remove the rear wiper mounting arm cover retaining nut trim covers.

5. Remove the rear wiper mounting arm cover.

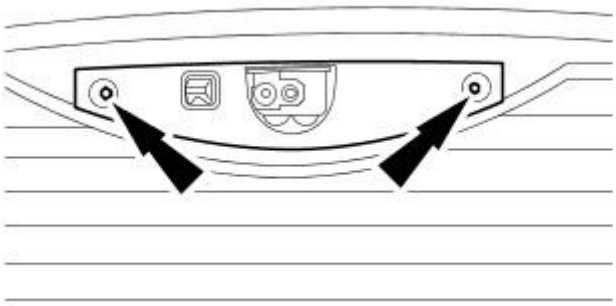

E49311

6. Remove the rear wiper mounting arm.

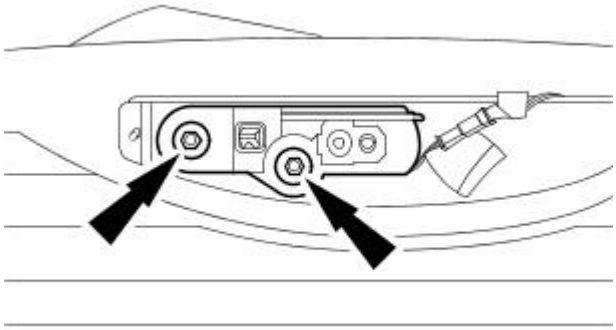

E49312

7. Remove the liftgate window glass release switch.

- Disconnect the liftgate window glass release switch electrical connector.

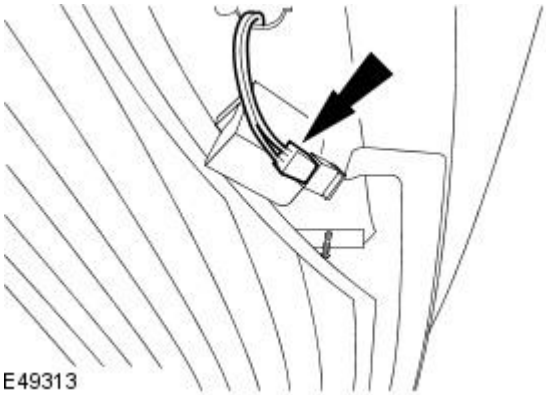

E49313

Installation

1. Install the liftgate window glass release switch.

- Connect the liftgate window glass release switch electrical connector.

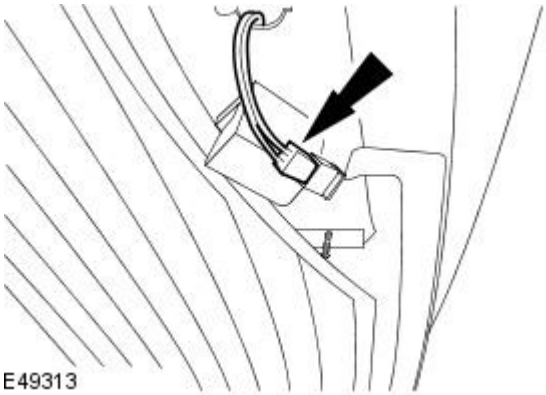

E49313

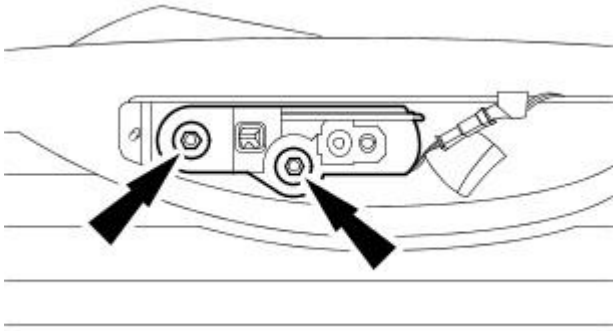

E49312

2. Install the rear wiper mounting arm.

- Tighten to 8 Nm.

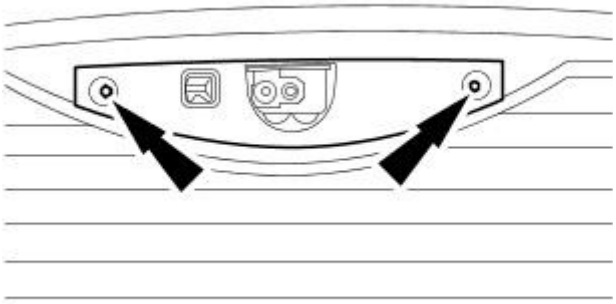

E49311

3. Install the rear wiper mounting arm cover.

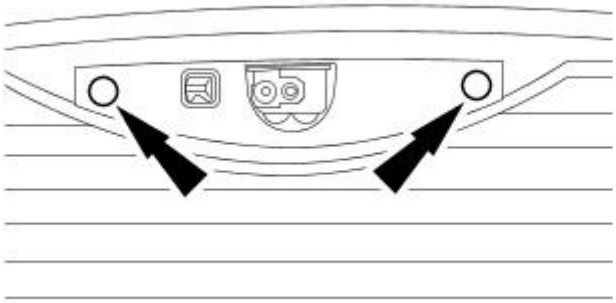

E49310

4. Install the rear wiper mounting arm cover retaining nut trim covers.

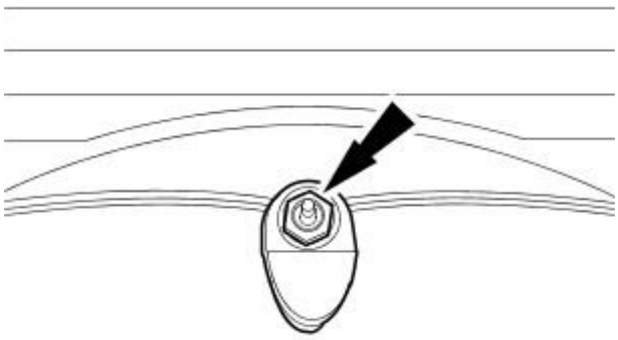

E49309

5. Install the liftgate window glass release switch retaining nut.

- Tighten to 9 Nm.

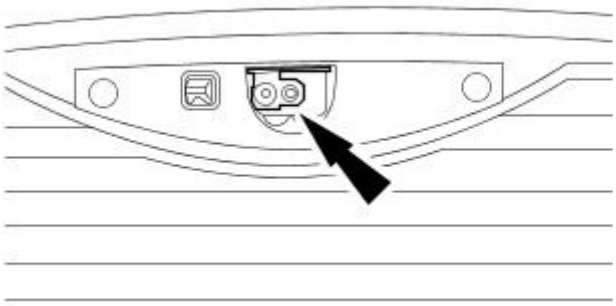

E49816

6. Make sure the rear wiper mounting arm is in the parked position.

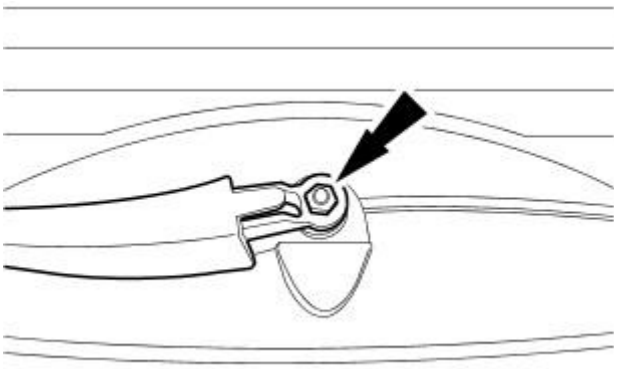

E49308

7. Install the rear window wiper pivot arm retaining nut.

- Tighten to 7 Nm.

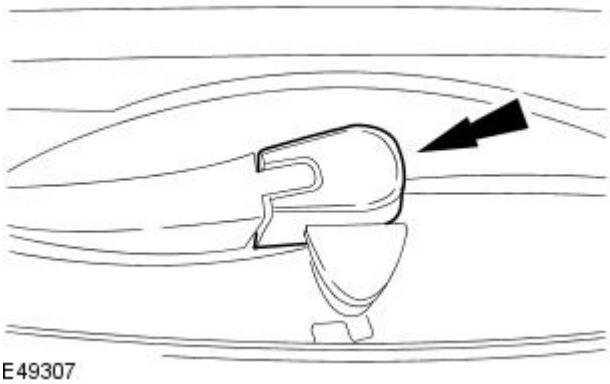

E49307

8. Install the rear window wiper pivot arm retaining nut cover.

9. Remove the liftgate trim panel.
For additional information, refer to: Liftgate Trim Panel (501-05 Interior Trim and Ornamentation, Removal and Installation).

10. Loosen the rear wiper motor retaining nuts.

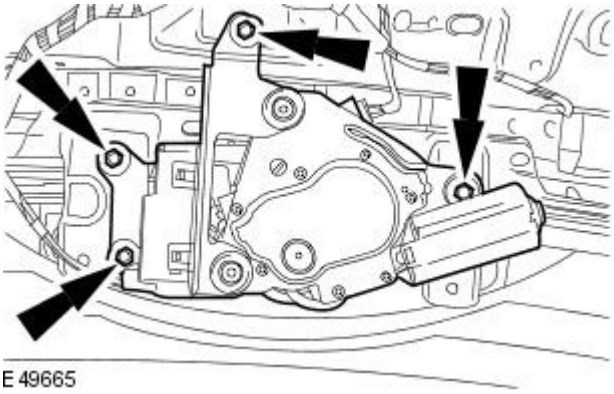

E49665

11. Close the liftgate.

12. NOTE: The aid of an assistant in the loadspace will be required to align the rear wiper motor to the liftgate window glass.

Make sure that the liftgate glass latch and rear wiper mounting arm locate correctly into the liftgate latch actuator and rear wiper motor.

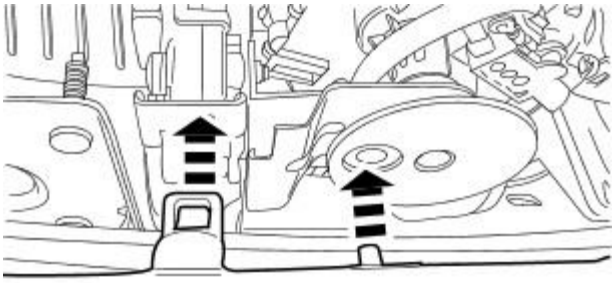

E49656

13. Close the liftgate glass.

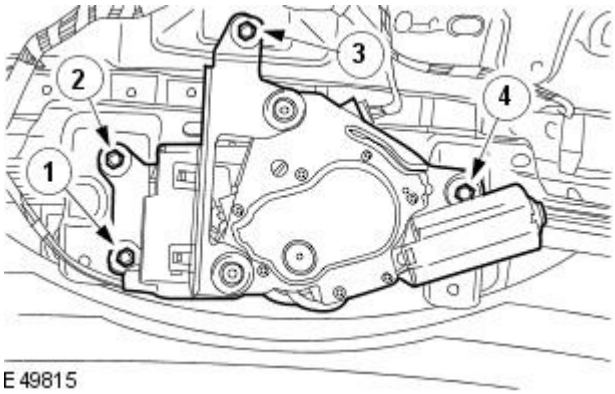

14. CAUTIONS:

With the aid of an assistant in the loadspace, fully tighten the rear wiper motor retaining nuts. Failure to follow this instruction may result in damage to the vehicle.

Make sure the rear wiper motor does not move whilst tightening the retaining nuts. Failure to follow this instruction may result in damage to the vehicle.

Tighten the rear wiper motor retaining nuts in the sequence shown.

- Tighten to 8 Nm.

15. Visually check the liftgate window glass for correct alignment.

16. Install the liftgate trim panel.
For additional information, refer to: Liftgate Trim Panel (501-05 Interior Trim and Ornamentation, Removal and Installation).

Handles, Locks, Latches and Entry Systems - Luggage Compartment Lid Latch Actuator

Removal and Installation

Removal

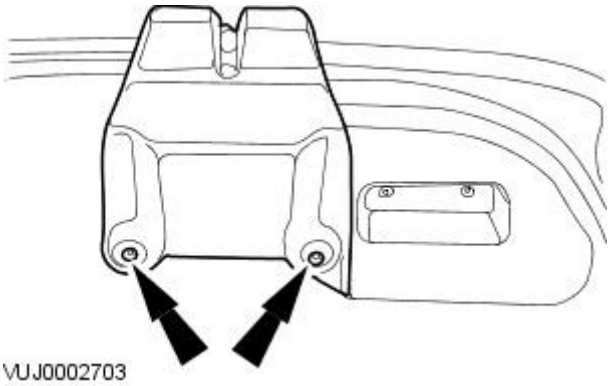

1. Remove the luggage compartment lid latch actuator trim panel.

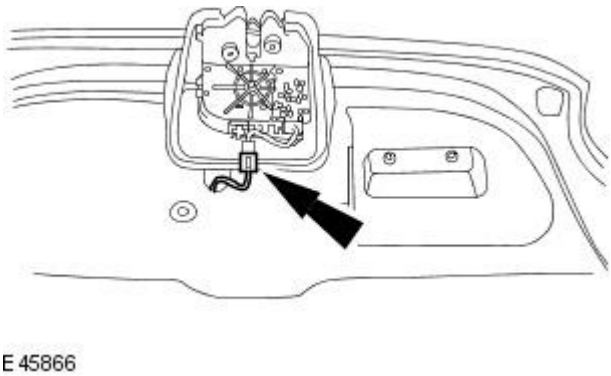

2. Disconnect the luggage compartment lid latch actuator electrical connector.

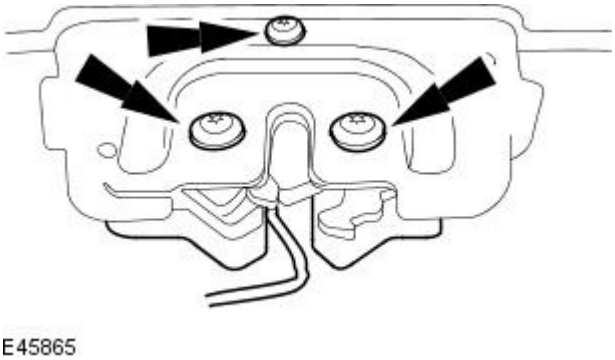

3. Remove the luggage compartment lid latch actuator.

Installation

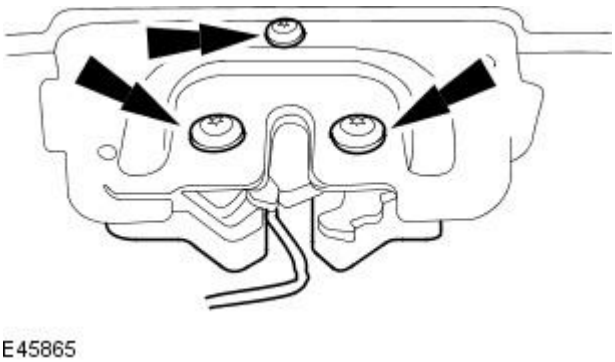

1. To install, reverse the removal procedure.

- Tighten to 10 Nm.

Handles, Locks, Latches and Entry Systems - Rear Door Lock Actuator

Removal and Installation

Removal

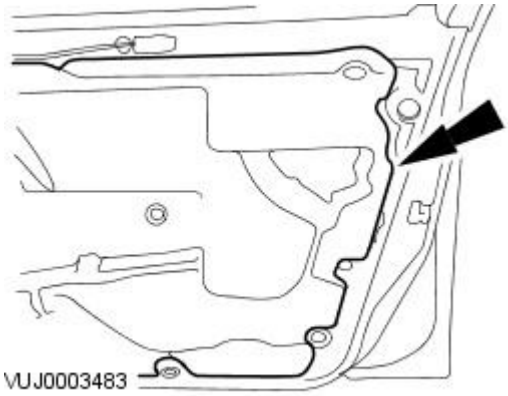

1. Remove the rear door trim panel. For additional information, refer toSection 501-05 Interior Trim and Ornamentation.

2. CAUTION: Do not touch the adhesive surface as re-bonding will be impaired.

   Peel back the weathershield.

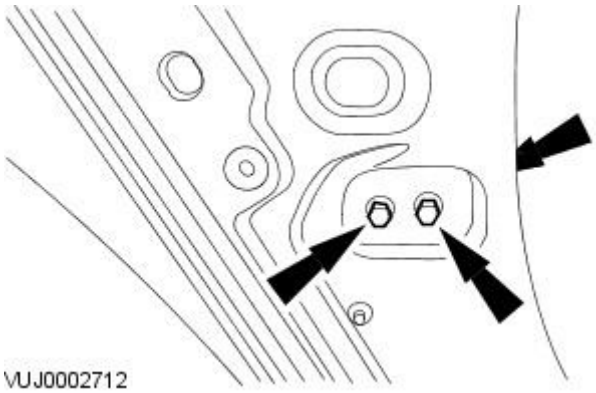

3. Remove the rear door window glass run retaining bracket.

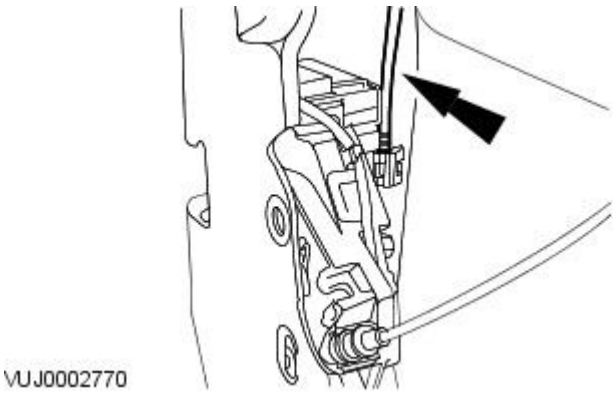

4. Disconnect the rear door latch exterior handle connecting rod.

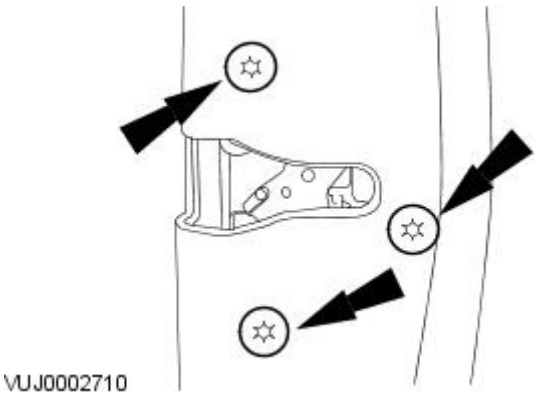

5. Detach the rear door latch.

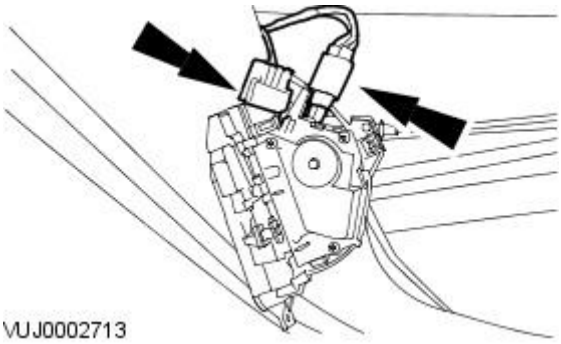

6. Disconnect the electrical connectors.

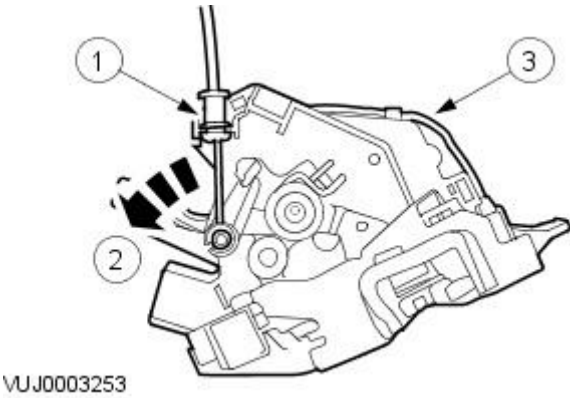

7. Remove the rear door latch actuator.

1. Detach the rear door latch actuator release cable.
2. Disconnect the rear door latch actuator release cable.
3. Remove the rear door latch actuator.

Installation

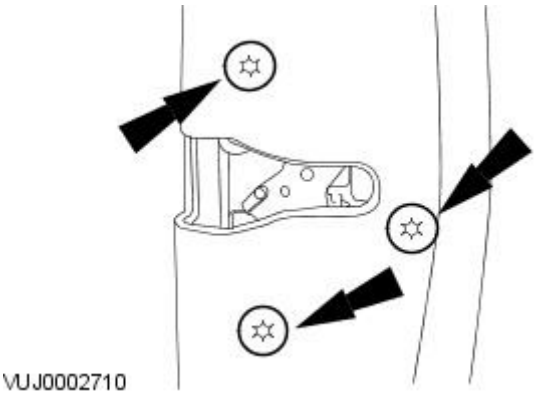

1. To install, reverse the removal procedure.

- Tighten to 7 Nm.

Published: 11-May-2011

Wipers and Washers -

Torque Specifications

Description	Nm	lb-ft	lb-in
Front mounting arm and pivot shaft retaining bolts	8	-	71
Front wiper motor retaining screws	8	-	71
Front wiper motor shaft retaining nut	18	13	-
Front wiper arm retaining nuts	17	13	-
Rear window wiper pivot arm retaining nut	7	-	62
Rear wiper motor retaining nuts	8	-	71
Liftgate window glass latch actuator retaining bolts	8	-	71

Wipers and Washers - Wipers and Washers

Description and Operation

All vehicles

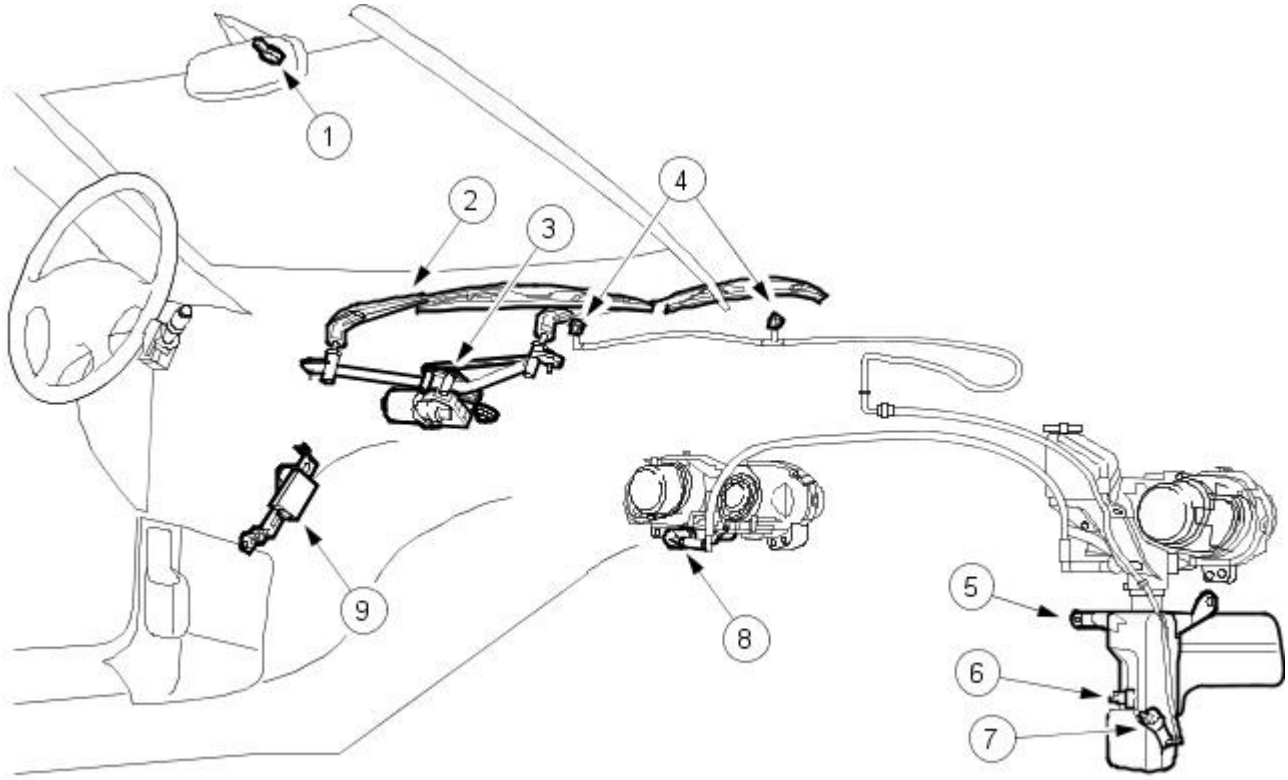

VUJ0004467

Item	Part Number	Description
1	—	Moisture sensor
2	—	Wiper pivot arms/wiper blades
3	—	Mounting arm and pivot shaft
4	—	Windscreen washer jets
5	—	Reservoir
6	—	Reservoir level switch
7	—	Windsheild washer pump
8	—	Headlamp washer assembly (if equipped)
9	—	Rain sensor module

The wipers and washers system consist of the following components, wipers and washers, mounting arm and pivot shaft, wiper motor, reservoir and washer pump, a headlamp washing system is available as an additional option.

The wipers have two speed control, low and high, and an intermittent wipe mode. The wipers will park automatically irrespective of their position when the OFF position of the ignition or control switch is selected.

Within wiper and washer system the following features can be attained, adjustable interval intermittent wiping, programmable wash and wipe sequencing and moisture sensitive wiping. The system and features are centrally controlled by the GEM (generic electronics module).

The intermittent wiping has seven speed settings, 3, 6, 9, 12, 15, 18 seconds and speed dependent. The driver also has the capacity to adjust these via a switch with seven settings.

The programmable wash and wipe sequence is driver controlled. With a depression of the wash/wipe switch between 40 milliseconds and 1.2 seconds the wash pump will be activated for a duration of 1.2 seconds. When the wash/wipe switch is depressed for longer than 1.2 seconds the wash pump will be activated for the duration of switch depression, a 10 second duration is the maximum available. The wiping system is automatically activated with the depression of the wash switch.

Where fitted, moisture sensitive wiping will be initiated when the vehicle is running and not in the PARK or NEUTRAL gear selection (gear engaged on manual vehicles). The wiper switch must be in the AUTO position.

Wagon

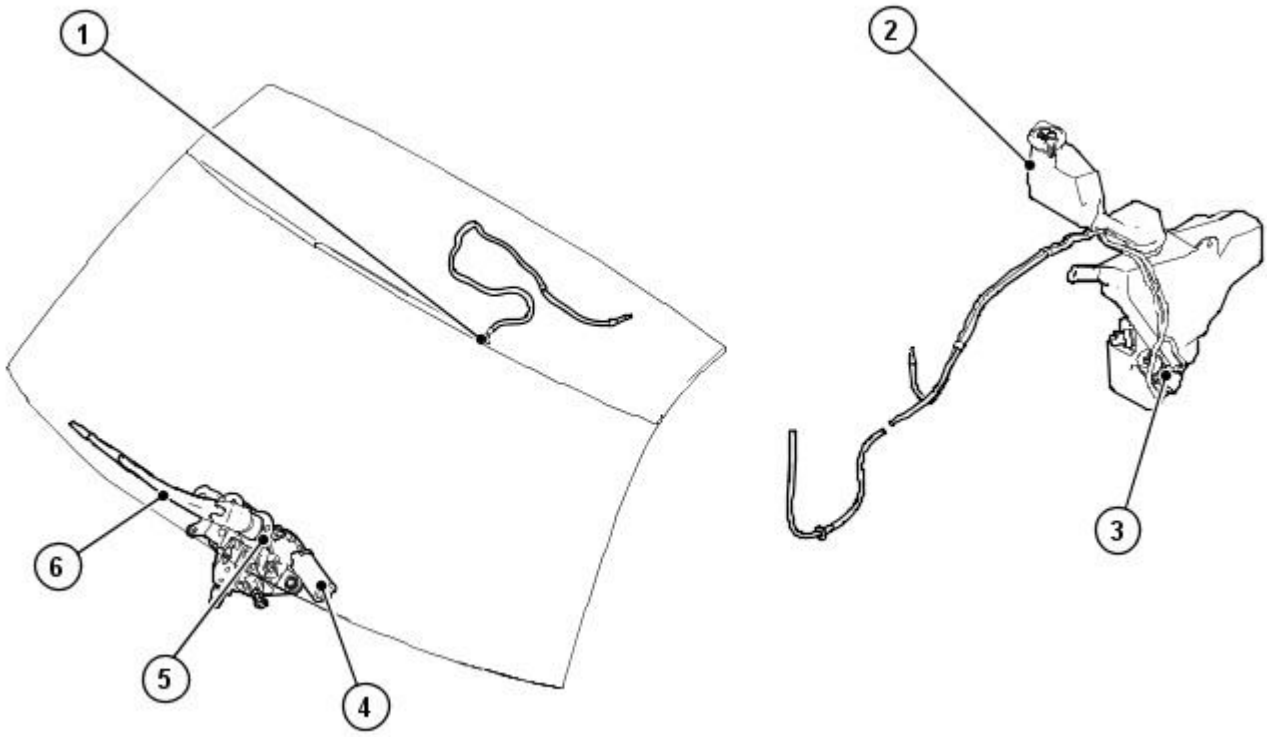

E49382

Item	Part Number	Description
1	-	Rear window washer jet
2	-	Reservoir
3	-	Windsheild and rear window washer motor
4	-	Rear window wiper motor
5	-	Rear wiper mounting arm
6	-	Rear window wiper pivot arm/wiper blade

The rear wiper and washer system consist of the following components, wipers and washers, pivot arm, wiper motor, reservoir (uses standard front washer reservoir) and washer pump.

The washer pump directs the washer fluid to the rear washer jet or the front washer jets via a directional valve.

The wiper motor has a rotating disk with a slot. The pivot arm has a pin. The movement of the arm is ensured through the engagement of the pin in the slot when the glass is closed. The latch actuator is fixed with 2 fixings on the latch bracket. It is driven electrically by switch on rear glass handle.

The rear wiper and washer is controlled by pushing the wash/wipe stalk forward, position one for the wipers and position two for the washers.

Published: 11-May-2011

Wipers and Washers - Wipers and Washers

Diagnosis and Testing

Inspection and Verification

1. **1.** Verify the customer concern.
2. **2.** Visually inspect for obvious signs of mechanical or electrical damage.

Visual Inspection Chart

Mechanical	Electrical
• Wiper arms for damage • Wiper linkage for damage • Wiper blades for cuts • Pipe(s) for blockages	• Wiring harness for damage or corrosion • Electrical connector(s) • Switch(s) • Motor(s) • Relay(s) • Fuse(s) • Module

3. **3.** If an obvious cause for an observed or reported concern is found, correct the cause (if possible) before proceeding to the next step.
4. **4.** If the cause is not visually evident, verify the symptom and refer to the Jaguar Approved Diagnostic System.

Wipers and Washers - Headlamp Washer Pump

Removal and Installation

Removal

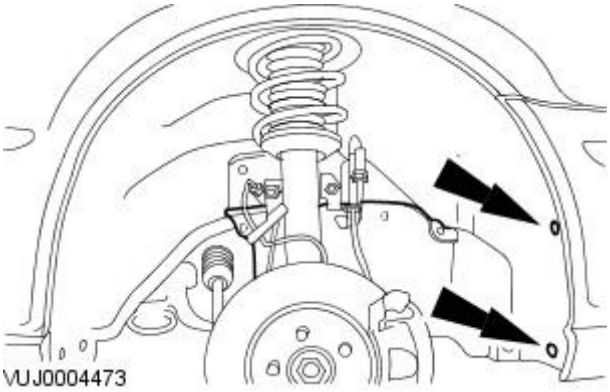

1. Remove the wheel and tire. For additional information, refer to Section 204-04 Wheels and Tires.
2. Detach the wheel arch liner.

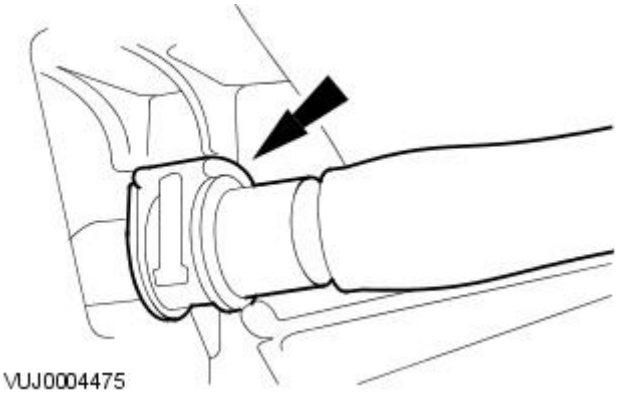

3. Remove the undertray. For additional information, refer toSection 501-02 Front End Body Panels.
4. Disconnect the headlamp washer supply hose.

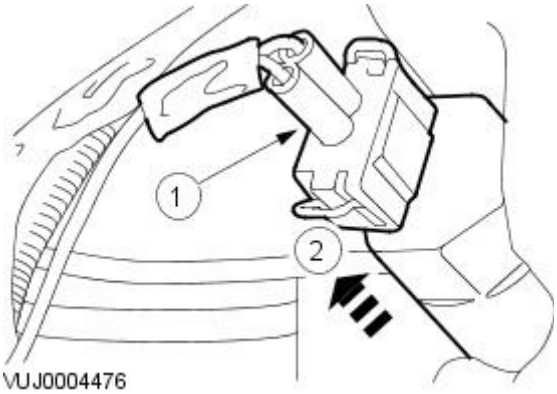

5. Remove the headlamp washer pump.
    1. Disconnect the headlamp washer pump electrical connector.
    2. Remove the headlamp washer pump.

Installation

1. To install, reverse the removal procedure.

Wipers and Washers - Rain Sensor

Removal and Installation

Removal

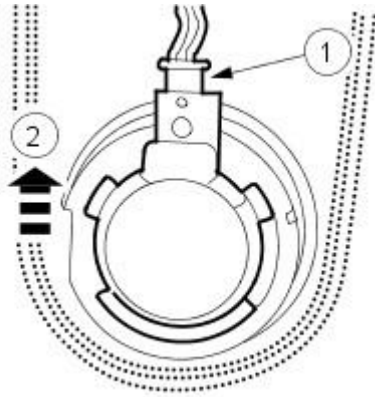

VUJ0004497

1. Remove the interior rear view mirror. For additional information, refer to Section 501-09 Rear View Mirrors.
2. Remove the moisture sensor.
    1. Disconnect the moisture sensor electrical connector.
    2. Remove the moisture sensor.

Installation

1. To install, reverse the removal procedure.

Wipers and Washers - Rain Sensor Module

Removal and Installation

Removal

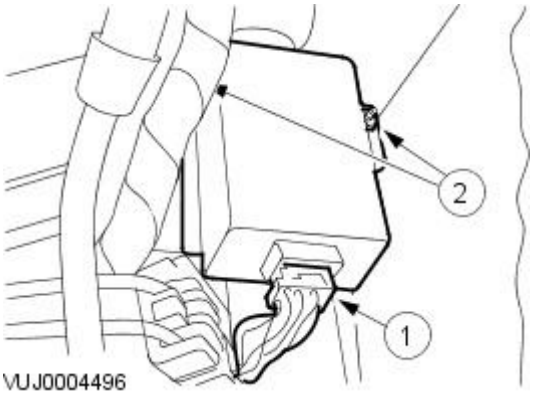

1. Remove the cowl side trim panel. For additional information, refer toSection 501-05 Interior Trim and Ornamentation.

2. Remove the rain sensor module.

1. Disconnect the rain sensor module electrical connector.
2. Remove the rain sensor module.

Installation

1. To install, reverse the removal procedure.

Wipers and Washers - Rear Window Wiper Motor

Removal and Installation

Removal

1. Remove the liftgate trim panel.
   For additional information, refer to: Liftgate Trim Panel (501-05 Interior Trim and Ornamentation, Removal and Installation).
2. Disconnect the liftgate window glass latch actuator electrical connector.

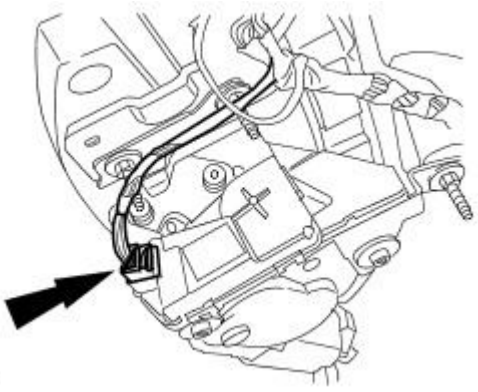

E49314

3. Remove the liftgate window glass latch actuator.

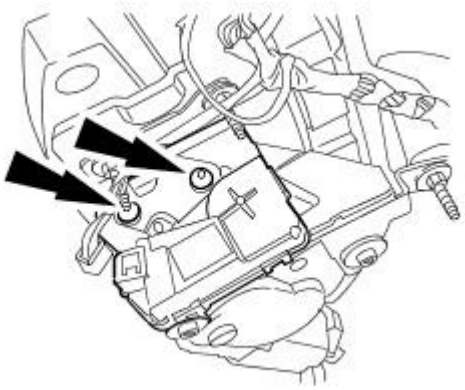

E49315

4. Disconnect the rear window wiper motor electrical connector.

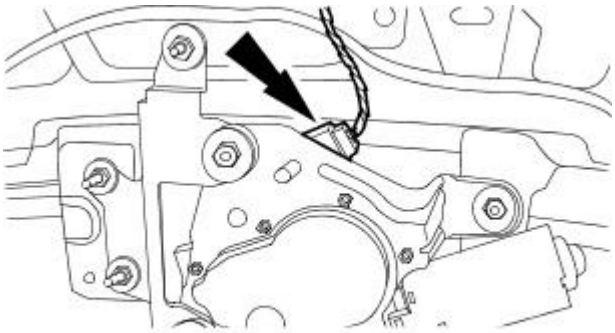

E48919

5. Remove the rear window wiper motor.

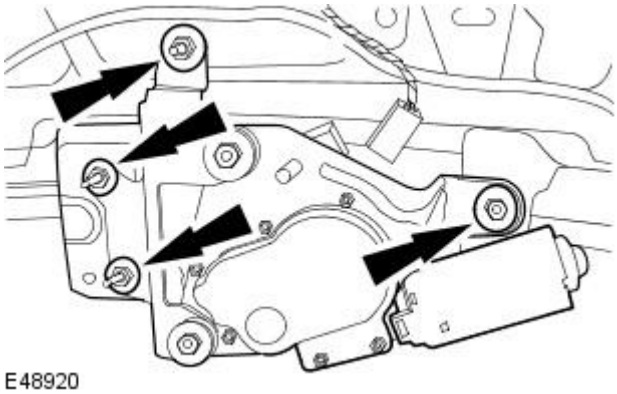

E48920

Installation

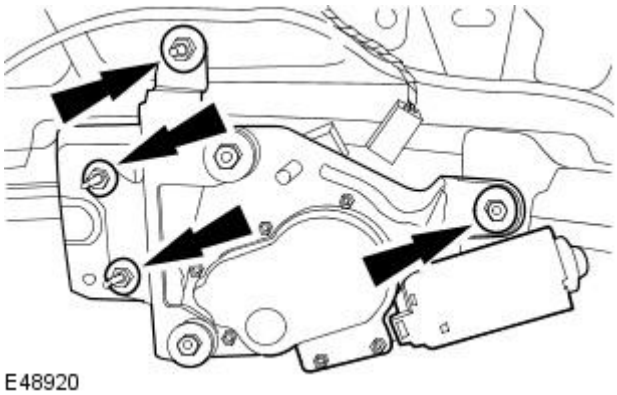

E48920

1. NOTE: Do not tighten the rear window wiper motor retaining nuts at this stage.

Install the rear window wiper motor.

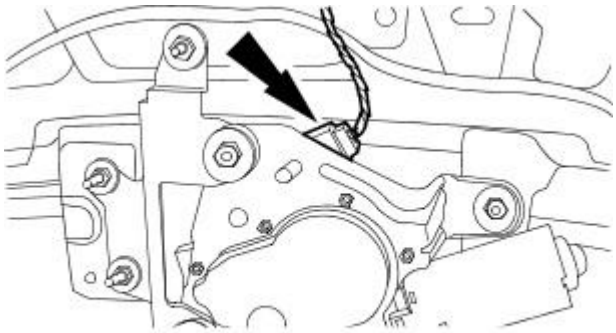

E48919

2. Connect the rear window wiper motor electrical connector.

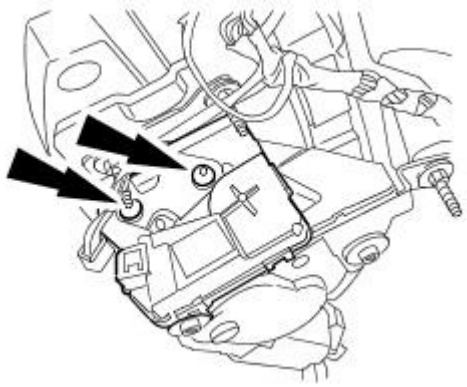

E49315

3. NOTE: Do not tighten the liftgate window glass actuator retaining bolts at this stage.

Install the liftgate window glass latch actuator.

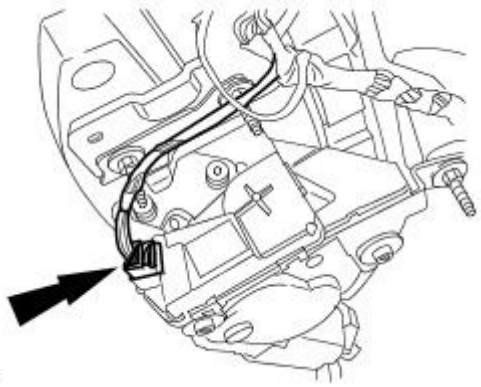

E49314

4. Connect the liftgate window glass latch actuator electical connector.

5. Close the liftgate.

6. Make sure the rear wiper mounting arm is in the parked position.

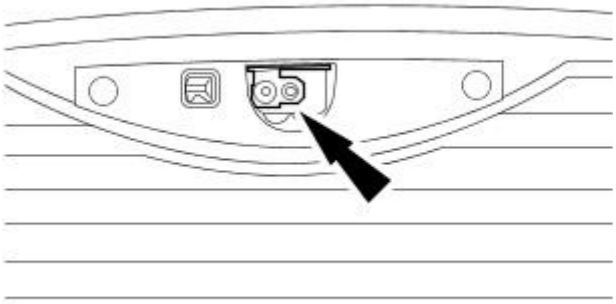

E49816

7. NOTE: The aid of an assistant in the loadspace will be required to align the rear wiper motor to the liftgate window glass.

Make sure that the liftgate glass latch and rear wiper mounting arm locate correctly into the liftgate latch actuator and rear wiper motor.

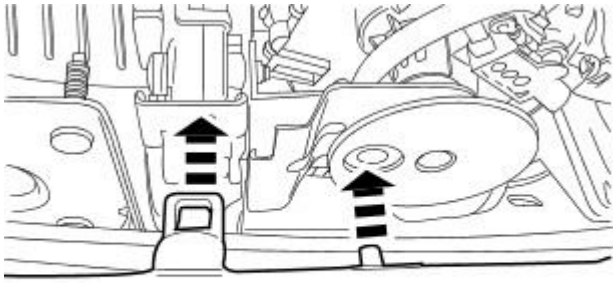

E49656

8. Close the liftgate glass.

9. Tighten the liftgate window glass actuator retaining bolts.

- Tighten to 8 Nm.

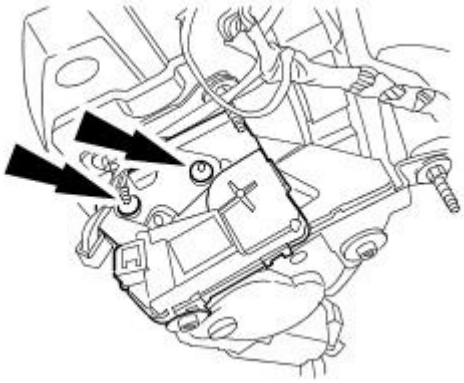

E49315

10. CAUTIONS:

With the aid of an assistant in the loadspace, fully tighten the rear wiper motor retaining nuts. Failure to follow this instruction may result in damage to the vehicle.

Make sure the rear wiper motor does not move whilst tightening the retaining nuts. Failure to follow this instruction may result in damage to the vehicle.

Tighten the rear wiper motor retaining nuts in the sequence shown.

- Tighten to 8 Nm.

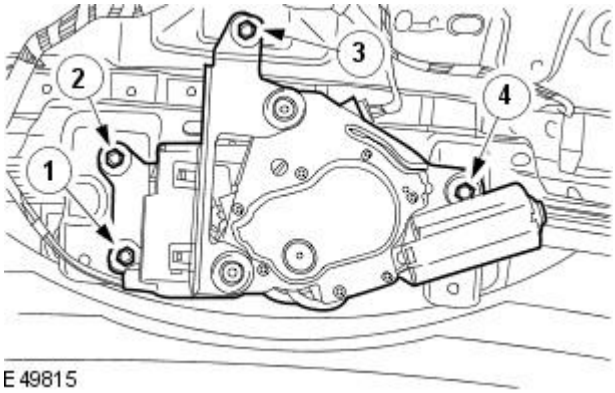

E49815

11. Visually check the liftgate window glass for correct alignment.

12. Install the liftgate trim panel.
For additional information, refer to: Liftgate Trim Panel (501-05 Interior Trim and Ornamentation, Removal and Installation).

Wipers and Washers - Windshield and Rear Window Washer Pump

Removal and Installation

Removal

1. Remove the right-hand front wheel and tire.
   For additional information, refer to: Wheel and Tire (204-04 Wheels and Tires, Removal and Installation).
2. Detach the fender splash shield.

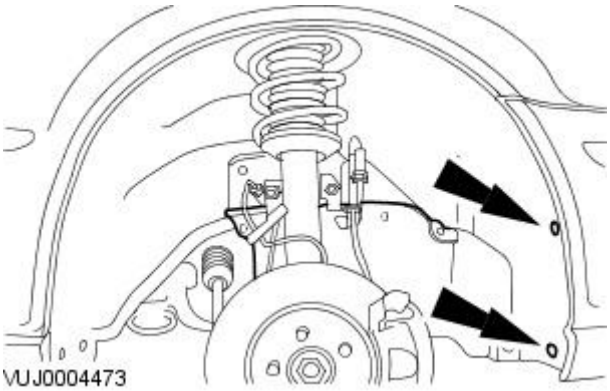

3. Disconnect the electrical connector.

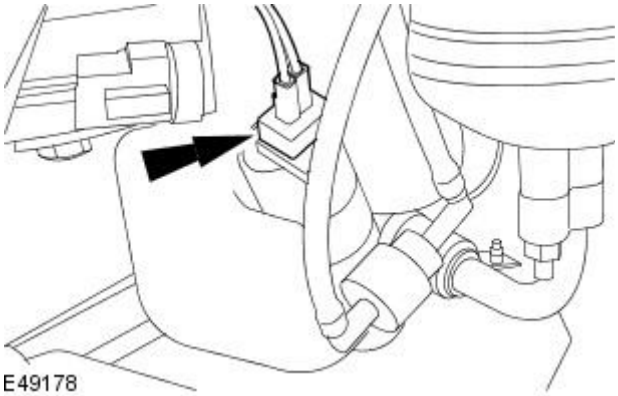

4. Remove the windshield and rear window washer pump.
   1. Disconnect the windshield washer supply hose.
   2. Disconnect the rear window washer supply hose.
   3. Remove the windshield and rear window washer pump.

Installation

1. To install, reverse the removal procedure.

Wipers and Washers - Windshield Washer Pump

Removal and Installation

Removal

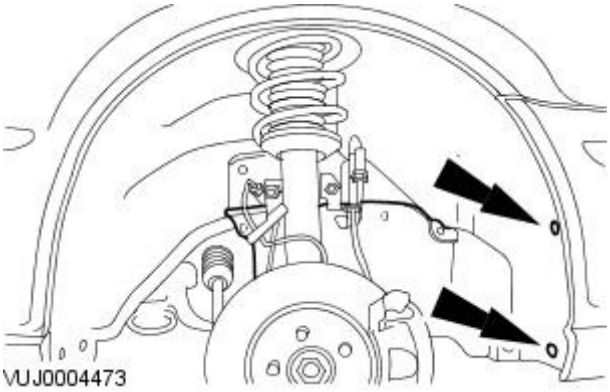

1. Remove the wheel and tire. For additional information, refer to Section 204-04 Wheels and Tires.
2. Detach the wheel arch liner.

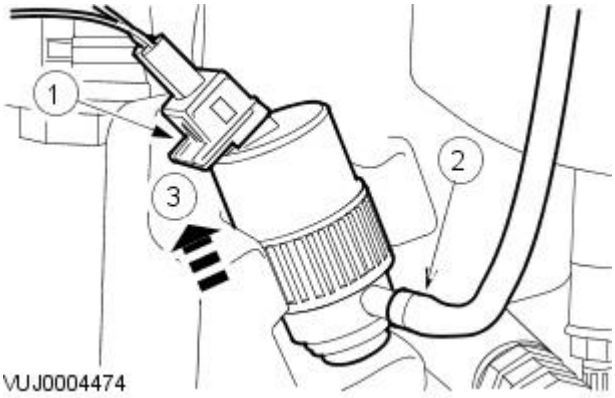

3. Remove the washer pump.
   1. Disconnect the washer pump electrical connector.
   2. Disconnect the washer pump supply hose.
   3. Remove the washer pump.

Installation

1. To install, reverse the removal procedure.

Wipers and Washers - Windshield Washer Reservoir

Removal and Installation

Removal

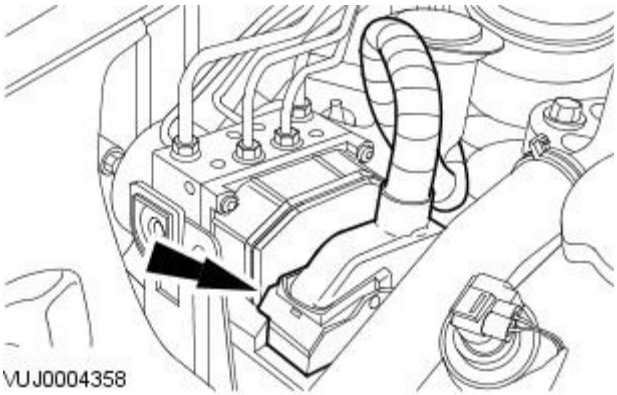

1. Disconnect the ABS electrical connector.

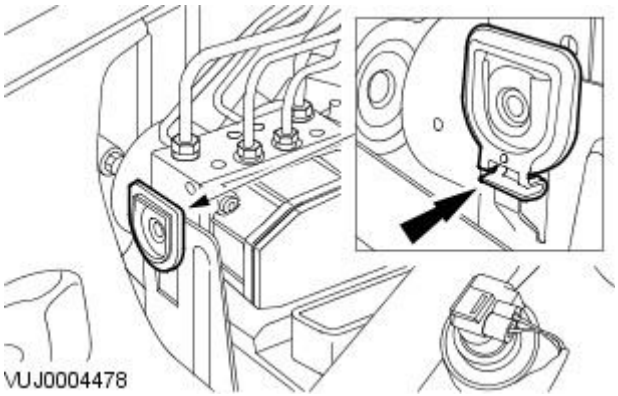

2. Detach the ABS module.

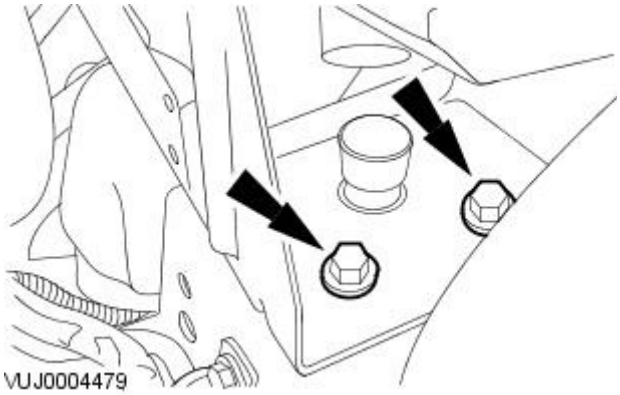

3. Remove the ABS module support bracket retaining bolts.

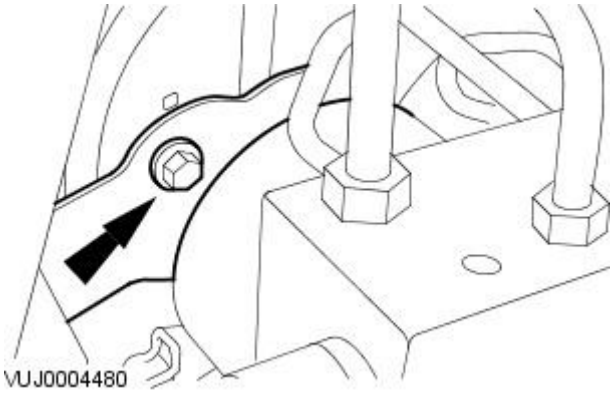

4. Remove the ABS module support bracket.

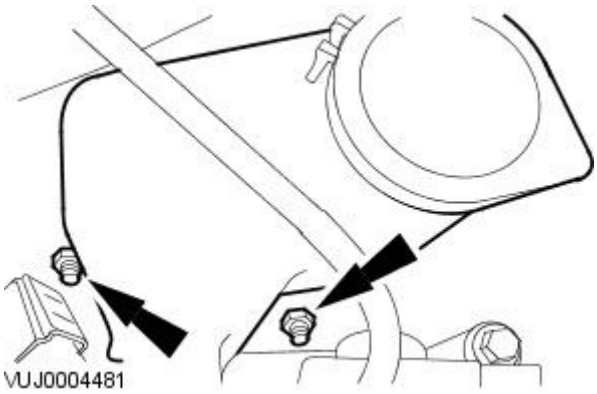

5. Remove the reservoir filler neck.

6. Remove the front bumper cover. For additional information, refer to Section 501-19 Bumpers.

7. Disconnect the headlamp washer supply hose.

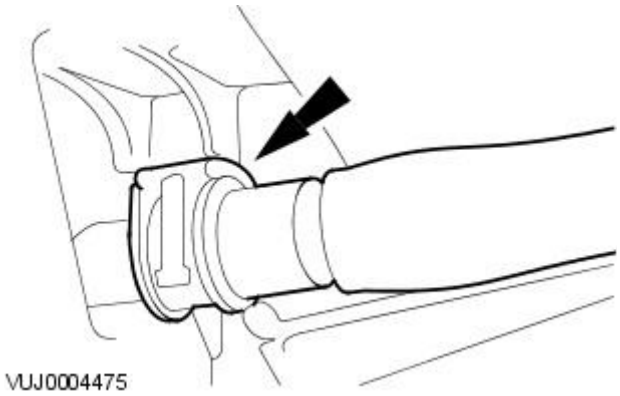

8. Remove the reservoir.

1. Disconnect the washer pump, headlamp washer pump and fluid level switch electrical connectors.
2. Disconnect the washer pump supply hose.
3. Remove the reservoir.

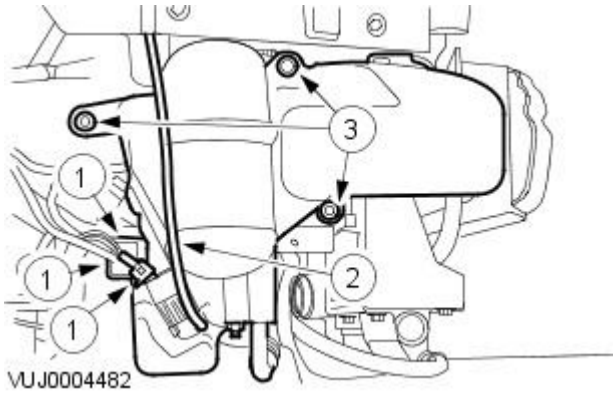

Installation

1. To install, reverse the removal procedure.

Wipers and Washers - Windshield Wiper Motor

Removal and Installation

Removal

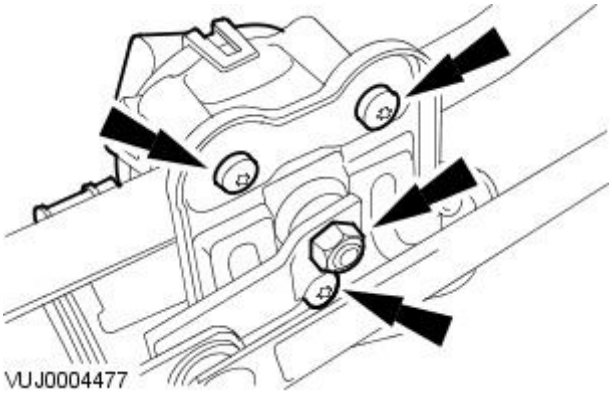

1. Remove the mounting arm and pivot shaft assembly. For additional information, refer to Mounting Arm and Pivot Shaft.
2. Remove the wiper motor.

Installation

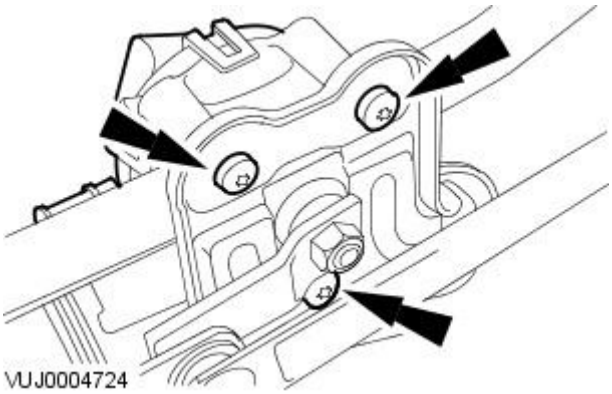

1. To install, reverse the removal procedure.
   - Tighten to 8 Nm.

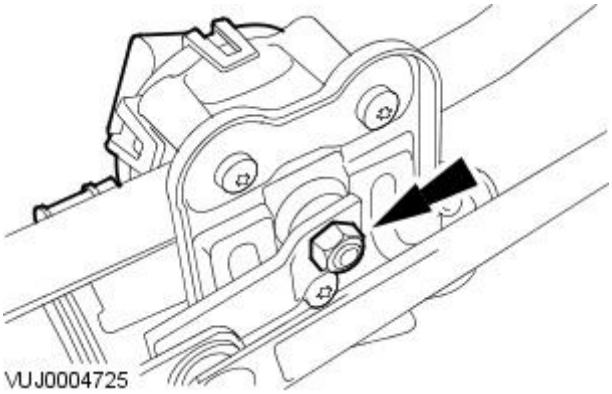

2. Tighten to 18 Nm.

Wipers and Washers - Wiper Mounting Arm and Pivot Shaft

Removal and Installation

Removal

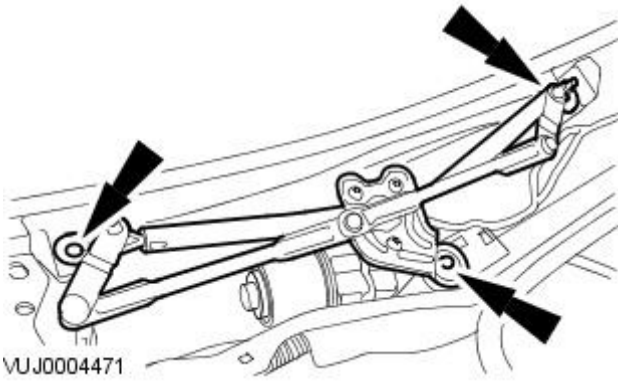

1. Remove the plenum cover. For additional information, refer toSection 501-02 Front End Body Panels.
2. Detach the mounting arm and pivot shaft assembly.

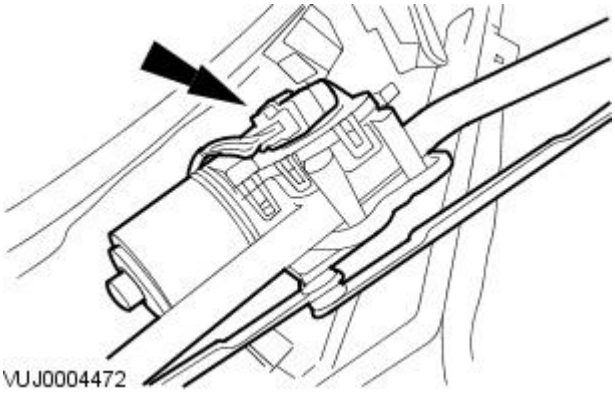

3. Remove the mounting arm and pivot shaft assembly.

Installation

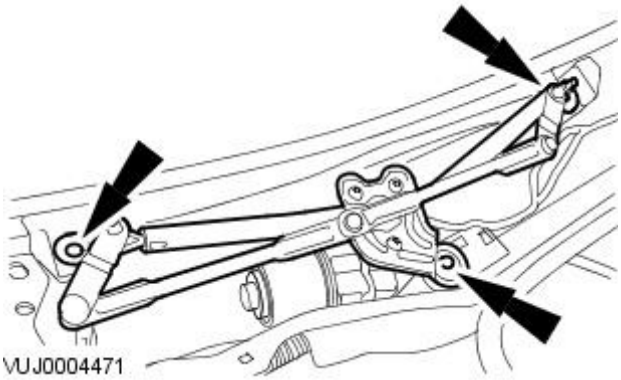

1. To install, reverse the removal procedure.
   - Tighten to 8 Nm.

Wipers and Washers - Wiper Pivot Arm

Removal and Installation

Special Tool(s)	
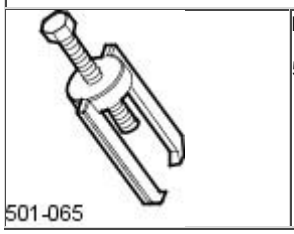 501-065	Remover - windscreen wiper 501-065

Removal

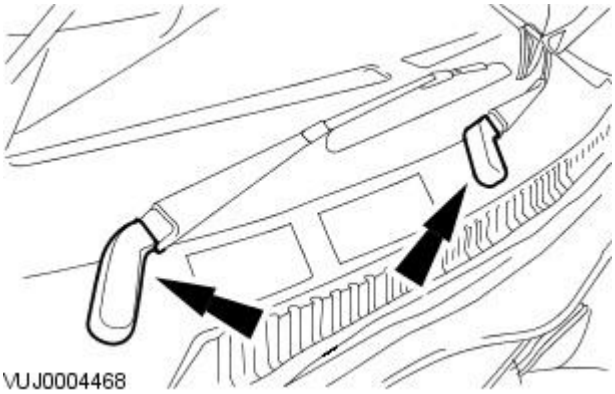

1. Remove the wiper arm nut covers

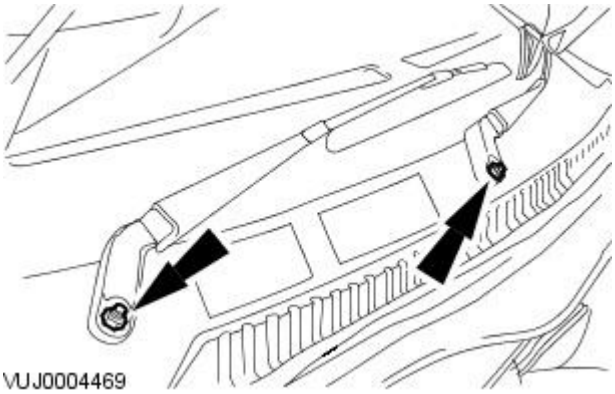

2. Remove the wiper arm nuts.

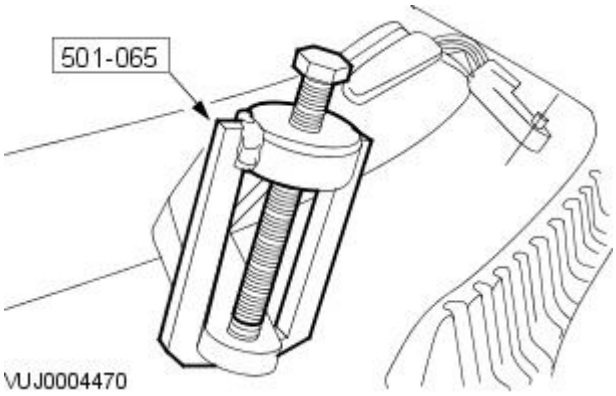

3. Using the special tool, detach the wiper arms.

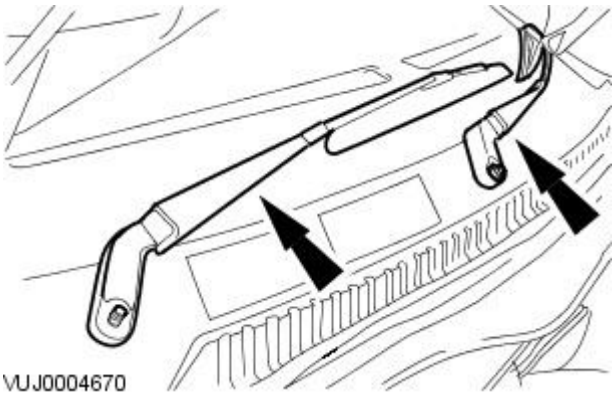

4. Remove the wiper arms

Installation

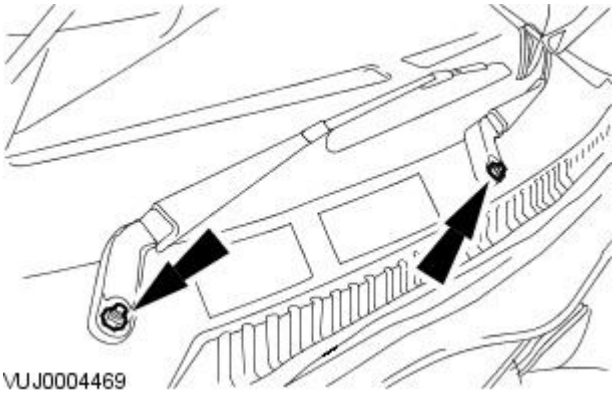

1. To install, reverse the removal procedure.

- Tighten to 17 Nm.

Published: 11-May-2011

Roof Opening Panel -

Torque Specifications

Description	Nm	lb-ft	lb-in
Roof opening panel frame retaining bolts	9	-	80
Roof opening panel bracket retaining bolts	9	-	80
Roof opening panel motor retaining bolts	3	-	27
Roof opening panel glass retaining screws	3	-	27

Published: 11-May-2011

Roof Opening Panel - Roof Opening Panel

Description and Operation

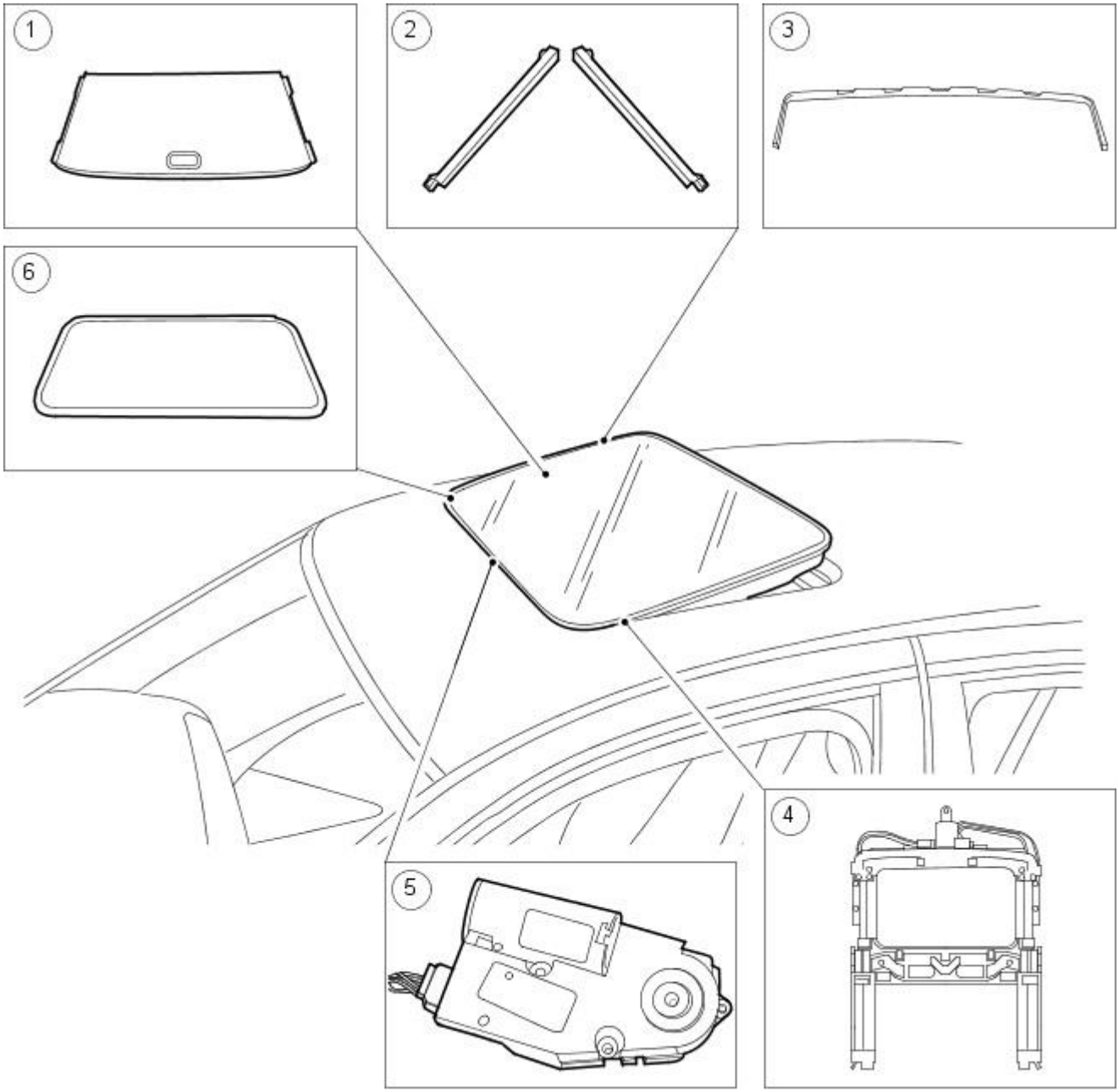

VUJ0003757

Item	Part Number	Description
1	—	Roof opening panel shield
2	—	Lifter arms
3	—	Air deflector
4	—	Roof opening panel frame
5	—	Roof opening panel motor
6	—	Roof opening panel glass

The roof opening panel is available as an option. The roof opening panel control module controls the roof opening panel. The roof opening panel motor and module are not available separately. The roof opening panel may be operated from the roof opening panel switch or the global close function.

Roof Opening Panel Switch Operation

The system operates as follows from the roof opening panel switch:

- Press the rear of the switch to the first detent with the roof opening glass in the closed position.
  - The roof opening glass opens rearward until the roof opening panel switch is released or the roof opening panel glass reaches the full open position.
- Press the rear of the switch to the second detent with the roof opening panel glass in the closed position.
  - Activates the express open feature.
  - The roof opening glass will slide rearward until the roof opening panel switch is pressed in any direction or the roof opening glass reaches the full open position.
- Press the front of the switch to the first detent with the roof opening panel glass in the closed position.
  - The roof opening panel glass will vent up until the roof opening panel switch is released or the roof opening panel glass reaches the full vent up position.
- Press the front of the switch to the second detent with the roof opening glass in the closed position.
  - The roof opening glass will vent up until the roof opening glass reaches the full vent up position or the switch is pressed in any direction.
- Press the front of the switch to the first detent with the roof opening glass in a rearward open position.
  - The roof opening glass will slide forward until the roof opening glass reaches the fully closed position or the switch is released.
- Press the front of the switch to the second detent with the roof opening glass in a rearward position.

- The roof opening glass will close until the roof opening panel switch is pressed in any direction or the roof opening glass reaches the full closed position.

- Press the rear of the switch to the first detent with the roof opening glass in a vent up position.
  - The roof opening glass will close until the roof opening panel switch is released or the roof opening glass reaches the full closed position.
- Press the rear of the switch to the second detent with the roof opening glass in a vent up position.
  - The roof opening glass will close until the roof opening panel switch is pressed in any direction or the roof opening glass reaches the full closed position.

Global Closing Operation

The roof opening panel is included in the global close operation. This function closes the power windows and the roof opening panel automatically. For additional information on the global close feature for the power windows, refer to Section 501-11 Glass, Frames and Mechanisms.

The global close function is activated by:

- turning the driver door lock cylinder to the lock position and holding.

Global close operation is only available with the ignition in the OFF position and the ignition key removed.

When the global close operation is selected, the roof opening panel switch is not recognized by the roof opening panel control module throughout the operation and for five seconds after the operation is completed.

Global close will operate as follows.

- With the roof opening glass in the open position, activating global close will close the roof opening glass to the flush position.

Published: 11-May-2011

Roof Opening Panel - Roof Opening Panel

Diagnosis and Testing

Principles of Operation

Roof Opening Panel Control Module

Battery power is continuously supplied to the roof opening panel control module. However, the roof opening panel will only operate from the roof opening panel switch with the ignition switch in the RUN or ACCY position. The global close feature is controlled by two circuits from the generic electronics control module (GEM). The two circuits must be at ground potential before the roof opening panel control module will acknowledge the roof opening panel switch. When the ignition switch is turned to RUN or ACCY, the GEM provides ground to these circuits.

The roof opening panel control module incorporates soft stops at the end of all travel positions. The roof opening panel control module monitors the internal switches to determine the roof opening glass position and the soft stops. The internal switches are activated by the roof opening panel motor rotation.

The roof opening panel control module supplies the power and ground to the roof opening panel motor depending on the ordered function. Power is supplied to the roof opening panel for a maximum of 12 seconds. Under normal operation, position is monitored by the roof opening panel control module and power is removed from the roof opening panel motor as soon as the roof opening panel reaches the commanded position.

Roof Opening Panel Switch

Two circuits connect the roof opening panel switch to the roof opening panel control module. One circuit controls open and down operation. The other circuit controls the tilt and close operation. The roof opening panel control module monitors these lines for voltage fluctuation to determine which function was selected.

With the ignition switch in the RUN or ACCY position, the roof opening panel supplies a five volt reference voltage to three control lines. Activation of the roof opening panel switch connects one or more of these lines to the common return which pulls the line low. The roof opening panel control module will sense the line or lines being connected to the common line and carry out the appropriate function.

The express open function connects the open and tilt circuits to the common return when the roof opening panel switch is moved rearward to the second detent position. The operator-controlled open function connects the open circuit to the common return. The close function connects the close circuit to the common causing the roof opening panel to close from a slide or vent position.

Global Close

One circuit connects the GEM to the roof opening panel control module for this function. Global close operation for the roof opening panel is controlled by this circuit being grounded by the GEM.

When the ignition switch is in the RUN or ACCY position, the GEM grounds this circuit allowing normal operation of the roof opening panel from the roof opening panel switch. Global close operation is only available with the ignition in the OFF position and the ignition key removed.

When global close operation is selected, the roof opening panel switch is not recognized by the roof opening panel control module throughout the operation and for five seconds after the operation is completed.

With the ignition switch in the OFF position, the roof opening panel control module supplies a constant voltage to this circuit. The roof opening panel control module monitors these lines for a low state, caused by the GEM grounding the line, to determine the ordered global function by the GEM.

Global close is commanded by the GEM grounding control line one. Line two will remain at previous voltage.

If both lines have voltage, the roof opening panel will be inoperative.

Inspection and Verification

1. **1.** Verify the customer concern by operating the system.
2. **2.** Visually inspect for obvious signs of mechanical and electrical damage.

Visual Inspection Chart

Mechanical	Electrical
• Roof opening panel track and rail assembly • Roof opening panel glass seal • Roof opening panel glass adjustment • Roof opening panel synchronization	• Central junction box (CJB) fuse 73 (15A) • Damaged, loose or corroded connectors • Wiring harness • Roof opening panel switch • Roof opening panel motor • Roof opening panel control module

3. **3.** If an obvious cause for an observed or reported concern is found, correct the cause (if possible) before proceeding to the next step.
4. **4.** If the concern is not visually evident, verify the symptom and refer to the Symptom Chart.

Symptom Chart

Refer to the Wiring Diagram manual for the connectors cited in the pinpoint tests.

SYMPTOM CHART

Symptom	Possible Sources	Action
The roof opening panel has excessive wind noise	* Incorrect adjustment. * Roof opening panel glass seal.	* GO to Pinpoint Test A.
The roof opening panel leaks	* Incorrect adjustment. * Roof opening panel frame drain hoses. * Roof opening panel glass seal.	* GO to Pinpoint Test B.

The roof opening panel is noisy during operation	* Roof opening panel glass. * Roof opening panel. * Roof opening panel motor.	* GO to Pinpoint Test C.
The roof opening panel does not open or close	* Roof opening panel. * Roof opening panel control module. * Roof opening panel motor. * Generic electronics module (GEM). * Roof opening panel switch. * Circuitry.	* GO to the approved Jaguar diagnostic system.
The roof opening panel does not open or close in vent position	* Roof opening panel control module. * Roof opening panel switch. * Circuitry.	* GO to the approved Jaguar diagnostic system.
The roof opening panel does not stop in flush from any position.	* Roof opening panel adjustment. * Roof opening panel glass seal. * Roof opening panel control module.	* GO to Pinpoint Test D.
The express open is inoperative	* Roof opening panel control module. * Roof opening panel switch. * Circuitry.	* GO to the approved Jaguar diagnostic system.

PINPOINT TEST A : THE ROOF OPENING PANEL HAS EXCESSIVE WIND NOISE

TEST CONDITIONS	DETAILS/RESULTS/ACTIONS
A1: CHECK THE ROOF OPENING GLASS FIT	
	1 Cycle the roof opening glass from the full-open to the full-closed position.
	2 Inspect the roof opening glass seal for proper fit or damage.
	Is the roof opening glass seal OK? **Yes** GO to A2. **No** INSTALL a new roof opening glass seal. REFER to Seal. Test the system for normal operation.
A2: CHECK THE ROOF OPENING GLASS OPERATION	
	1 Cycle the roof opening glass from the full-open to the full-closed position.
	Does the roof opening glass travel to the full-open and the full-closed position? **Yes** ADJUST the roof opening glass. REFER to Roof Opening Panel Alignment. If the roof opening glass closes unevenly, CHECK the roof opening panel syncronization. REFER to Section 100-00 General InformationMotor Synchronization —Calibration. Test the system for normal operation. **No** CHECK the roof opening panel glass seal. If necessary, INSTALL a new roof opening panel glass seal. REFER to Seal. TEST the system for normal operation.

PINPOINT TEST B : THE ROOF OPENING PANEL LEAKS

TEST CONDITIONS	DETAILS/RESULTS/ACTIONS
B1: CHECK THE ROOF OPENING PANEL OPERATION	
	1 Cycle the roof opening panel glass from the full-open position to the full-closed position.
	Does the roof opening glass operate smoothly and close tightly? **Yes** GO to B2. **No** CHECK the roof opening panel glass alignment. REFER to Roof Opening Panel Alignment. Test the system for normal operation.
B2: CHECK THE ROOF OPENING PANEL FRAME DRAIN TUBES	
	1 Gain access to the roof opening panel drain tubes.
	Is there blockage or damage to the roof opening panel drain tubes? **Yes** Clear the blockage or if necessary, INSTALL a new drain tube. TEST the system for normal operation. **No** GO to B3.
B3: CHECK THE ROOF OPENING PANEL GLASS SEAL	
	1 Actuate the roof opening panel glass to the full open position.
	Is the roof opening panel glass seal damaged? **Yes** INSTALL a new roof opening panel glass seal. REFER to Seal. TEST the system for normal operation. **No** REPAIR as necessary. TEST the system for normal operation.

PINPOINT TEST C : THE ROOF OPENING PANEL IS NOISY DURING OPERATION

TEST CONDITIONS	DETAILS/RESULTS/ACTIONS
C1: CHECK THE OPERATION OF THE ROOF OPENING PANEL GLASS	
	1 Cycle the roof opening panel glass from the full-open to the full-closed position.
	Is the roof opening panel glass loose? **Yes** ADJUST the roof opening panel glass. REFER toRoof Opening Panel Alignment **No** GO to C2.
C2: CHECK FOR OBSTRUCTIONS	
	1 Check the roof opening panel track and rail for foreign material, damage or looseness.
	Is the roof opening panel obstructed or damaged? **Yes** REMOVE the obstruction. If necessary, INSTALL a new roof opening panel frame. REFER to Roof Opening Panel Frame. TEST the system for normal operation.

	No GO to C3.
C3: CHECK THE ROOF OPENING PANEL MOTOR	
	1 Cycle the roof opening glass from the full-open to the full-closed position.
	Does the roof opening panel motor make excessive noise? **Yes** CHECK the roof opening panel motor for correct mounting. If necessary, INSTALL a new roof opening panel motor . REFER toRoof Opening Panel MotorTEST the system for normal operation. If the roof opening panel opens or closes unevenly, ADJUST the roof opening panel motor syncronization. REFER toMotor Synchronization—Calibration **No** REFER to Roof Opening Panel Alignment ADJUST the roof opening panel glass as necessary. TEST the system for normal operation.

PINPOINT TEST D : THE ROOF OPENING PANEL DOES NOT STOP IN FLUSH FROM ANY POSITION	
TEST CONDITIONS	**DETAILS/RESULTS/ACTIONS**
D1: CHECK THE ROOF OPENING PANEL GLASS ADJUSTMENT	
	1 Check the roof opening panel glass alignment. For additional information, refer to Roof Opening Panel Alignment.
	Is the roof opening panel glass adjusted correctly? **Yes** GO to D2. **No** ADJUST the roof opening panel glass as necessary. TEST the system for normal operation.
D2: CHECK THE ROOF OPENING GLASS SEAL	
	1 Inspect the roof opening panel glass seal for looseness, damage and correct installation.
	Is the roof opening panel glass seal OK and installed correctly? **Yes** GO to D3. **No** REPAIR or INSTALL a new roof opening panel glass seal as necessary. For additional information, refer to Seal. TEST the system for normal operation.
D3: CHECK FOR OBSTRUCTION IN THE ROOF OPENING PANEL	
	1 Inspect the roof opening panel assembly for obstructions in the track.
	Are any obstructions found? **Yes** REMOVE the obstruction. If necessary, INSTALL a new roof opening panel track and rail assembly. For additional information, refer to Roof Opening Panel Frame. TEST the system for normal operation. **No** INSTALL a new roof opening panel control module. For additional information, refer toRoof Opening Panel Motor

Published: 11-May-2011

Roof Opening Panel - Motor Synchronization

General Procedures

New Roof Opening Panel Motor Synchronization Procedure

• NOTE: The roof opening panel and roof opening panel motor must be installed and the roof opening panel alignment checked prior to synchronizing the motor.

• NOTE: This procedure is for a new roof opening panel motor.

1. Operate the roof opening panel to the fully vent position.
2. Release the roof opening panel control switch, press the roof opening panel control switch again in the same direction within 0.5 seconds and hold until the glass panel stops after a complete opening and closing cycle.

Roof Opening Panel De-Synchronization Procedure

• NOTE: This procedure is to be followed when the roof opening panel motor is detached or removed from the roof opening panel and before it is re-installed.

1. Connect the roof opening panel motor electrical connector.
2. Connect the roof opening panel control switch electrical connector.
3. Operate the roof opening panel control switch to the vent position until the roof opening panel motor stops.
4. Release the roof opening panel control switch. Operate the roof opening panel control switch again in the same direction until the roof opening panel motor stops.
5. Release the roof opening panel control switch, operate the roof opening panel control switch within 0.5 seconds in the same direction and hold for 30 seconds.
6. After 30 seconds the roof opening panel motor will start to turn in one direction.
7. Operate the roof opening panel control switch in the opposite (open) direction. The de-synchronization procedure is successful if the roof opening panel motor does not turn.

De-Synchronized Roof Opening Panel Synchronization Procedure

• NOTE: The roof opening panel and roof opening panel motor must be installed and the roof opening panel alignment checked prior to synchronizing the motor.

• NOTE: This procedure is for a roof opening panel motor that has been previously installed and has been de-synchronized.

1. Operate the roof opening panel to the fully vent position.
2. Release the roof opening panel control switch, press the roof opening panel control switch again in the same direction and hold for 30 seconds until the glass moves slightly.
3. Release the roof opening control switch, press the roof opening panel control switch again within 0.5 seconds in the same direction until the glass panel stops after a complete opening and closing cycle.

Roof Opening Panel - Roof Opening Panel Alignment

General Procedures

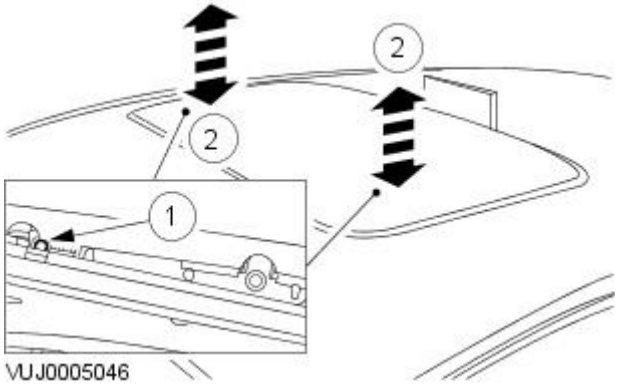

1. Place a suitable 1.0 - 1.2 mm thick plastic spacer between the roof opening panel and the roof panel.

2. Adjust the rear edge of the roof opening panel.

1. Loosen the rear screws on both sides.
2. Push the rear edge up/down to give correct alignment (flush to + 1 mm).

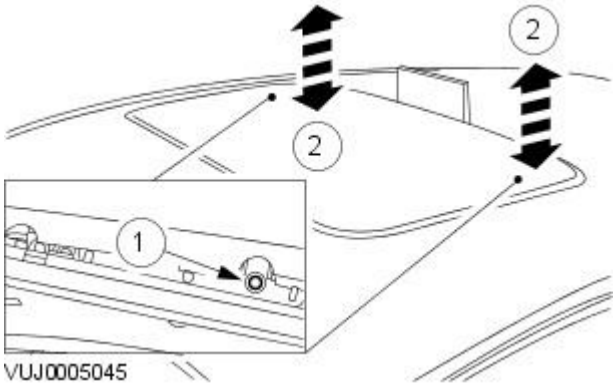

3. Adjust the front edge of the roof opening panel.

1. Loosen the front screws on both sides.
2. Push the front edge up/down to give correct alignment (flush to - 1 mm).

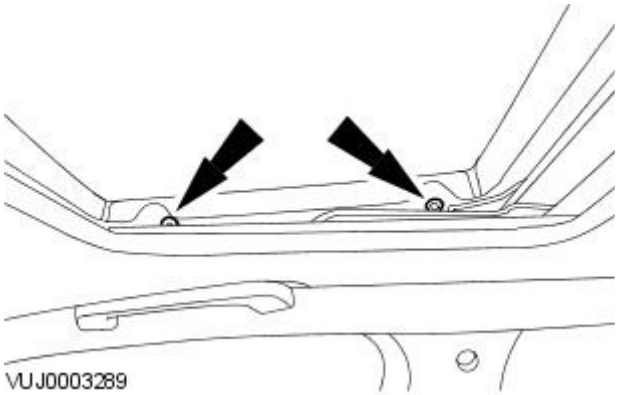

4. Tighten to 3 Nm.

5. Remove the spacer.

Roof Opening Panel - Air Deflector

Removal and Installation

Removal

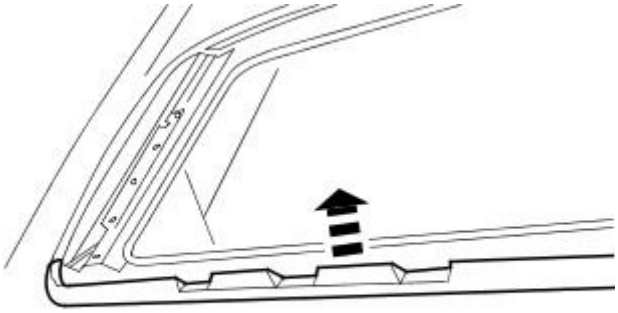

VUJ0003296

1. Move the roof opening panel glass fully rearward.
2. Detach the air deflector.

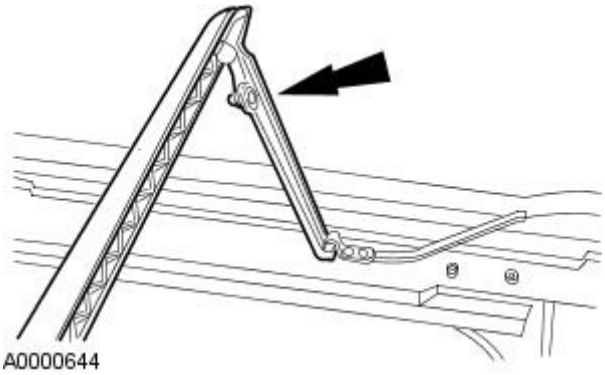

A0000644

3. Remove the air deflector.

Installation

1. To install, reverse the removal procedure.

Roof Opening Panel - Lifter Arms

Removal and Installation

Removal

1. Remove the roof opening panel glass. For additional information, refer to Roof Opening Panel Glass.
2. Detach the control arm.

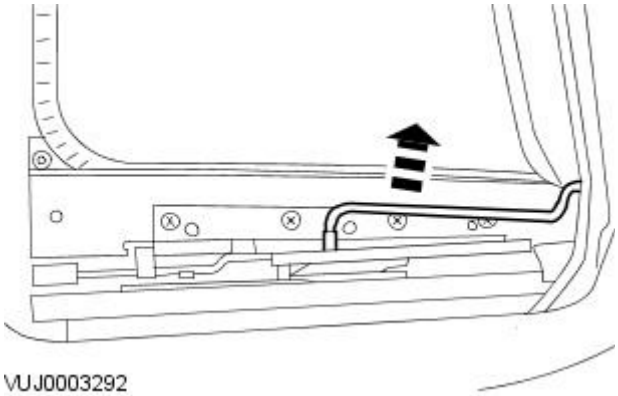

VUJ0003292

3. Remove the lifter arm retaining plate.

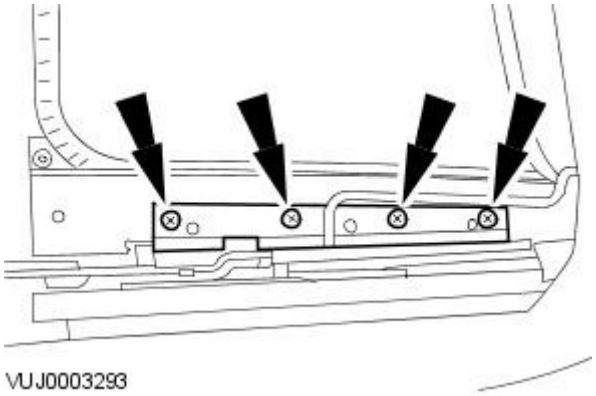

VUJ0003293

4. Detach the lifter arm.

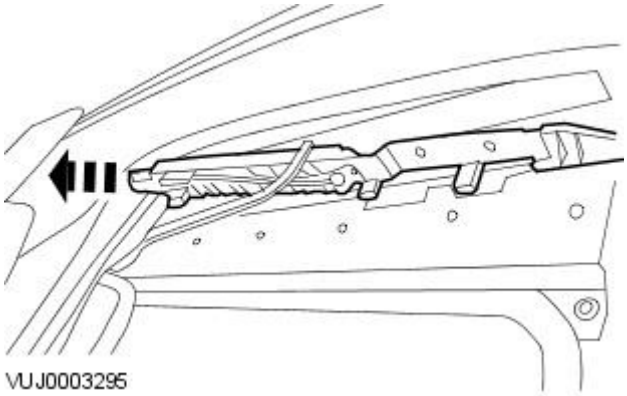

VUJ0003295

5. Remove the lifter arm.

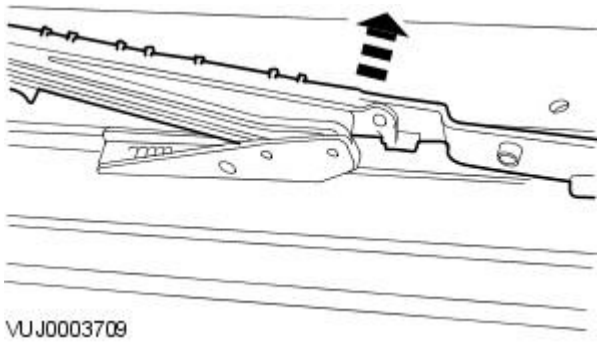

VUJ0003709

Installation

1. To install, reverse the removal procedure.
2. Check, and if necessary, adjust the roof opening panel alignment. For additional information, refer to Roof Opening Panel Alignment.

Roof Opening Panel - Roof Opening Panel Control Switch

Removal and Installation

1. Remove the overhead console. For additional information, refer to Section 501-12 Instrument Panel and Console.

Roof Opening Panel - Roof Opening Panel Drain Hose

Removal and Installation

Removal

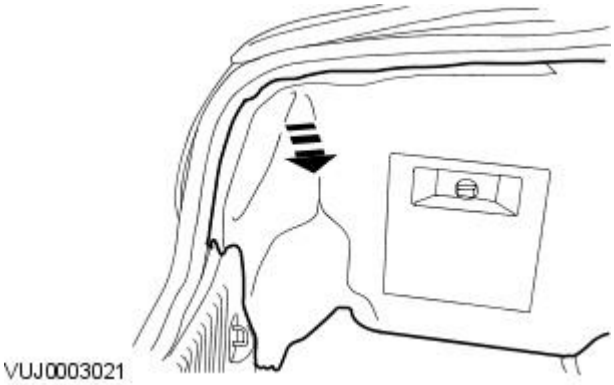

1. Detach the rear quarter trim panel.

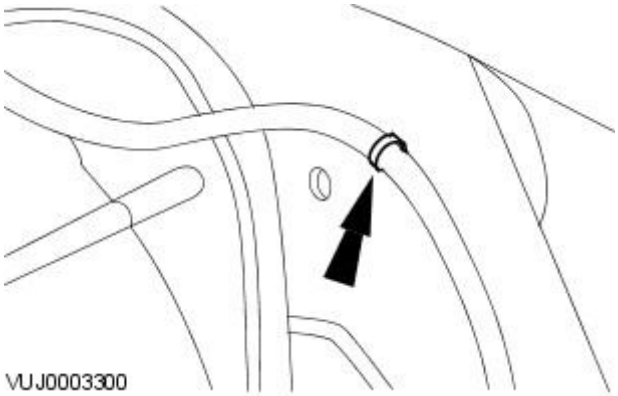

2. Detach the drain hose from the retaining clip.

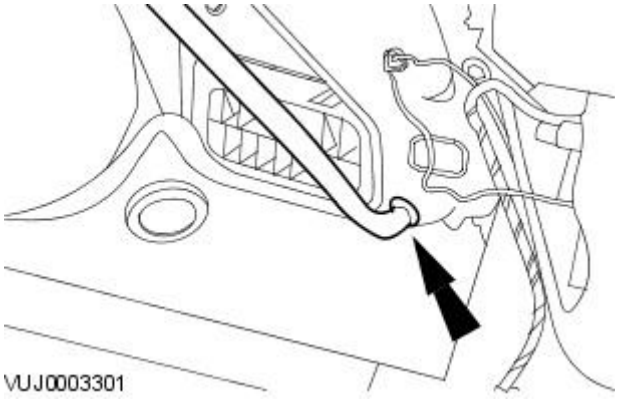

3. Detach the drain hose from the grommet.

4. Remove the headliner. For additional information, refer toSection 501-05 Interior Trim and Ornamentation.

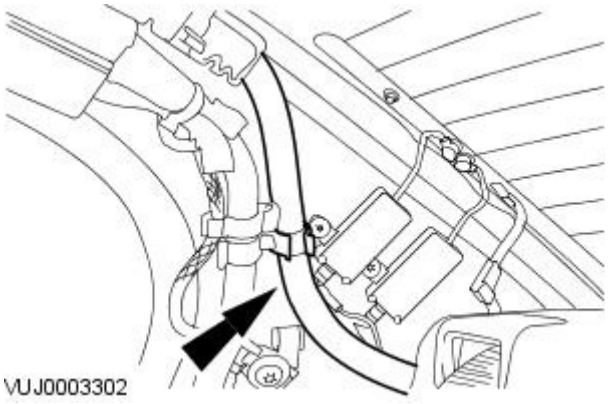

5. Detach the drain hose from the retaining clip.

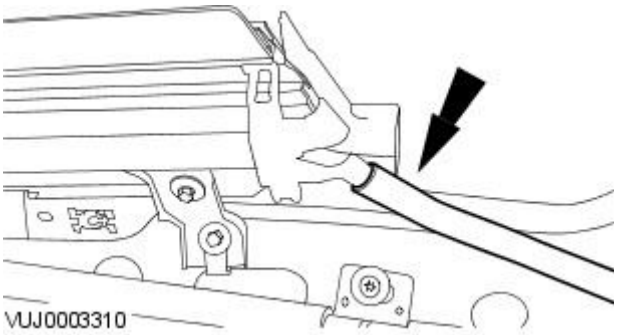

6. Remove the drain hose.

Installation

1. To install, reverse the removal procedure.

Roof Opening Panel - Roof Opening Panel Frame

Removal and Installation

Removal

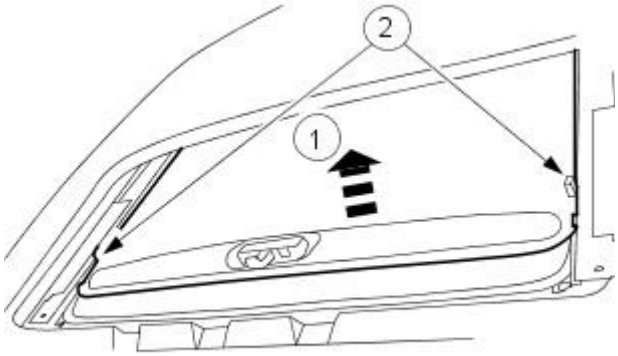

VUJ0003304

1. Remove the roof opening panel glass. For additional information, refer to Roof Opening Panel Glass.
2. Detach the roof opening panel shield.
   1. Position the center of the roof opening panel shield upwards.
   2. Detach the roof opening panel shield guide pads.

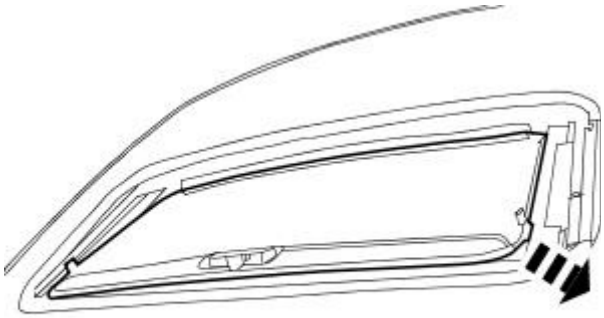

VUJ0003305

3. Remove the roof opening panel shield.
   - Rotate the roof opening panel shield.

4. Remove the headliner. For additional information refer to Section 501-05 Interior Trim and Ornamentation.
5. Disconnect the roof opening panel motor electrical connector.

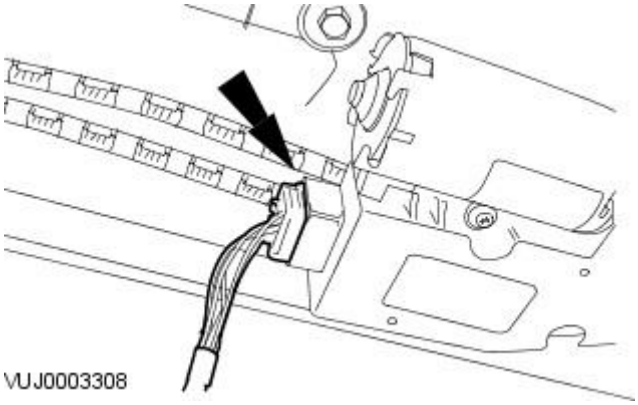

VUJ0003308

6. Detach the roof opening panel front drain hoses.
   - Right-hand side shown, left-hand side similar.

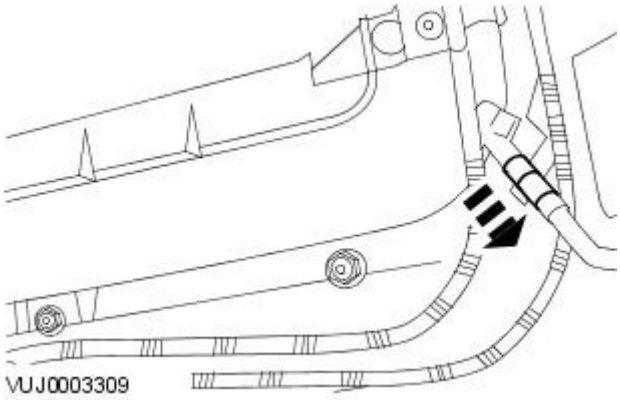

VUJ0003309

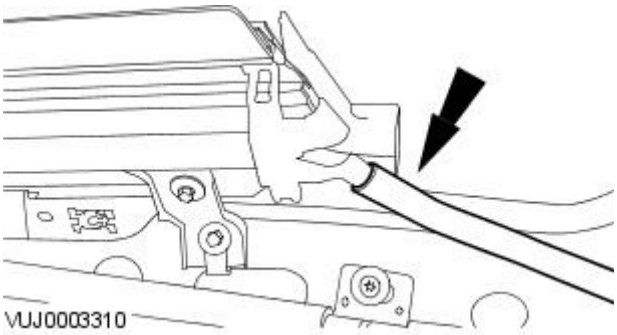

7. Detach the roof opening panel rear drain hoses.

- Right-hand side shown, left-hand side similar.

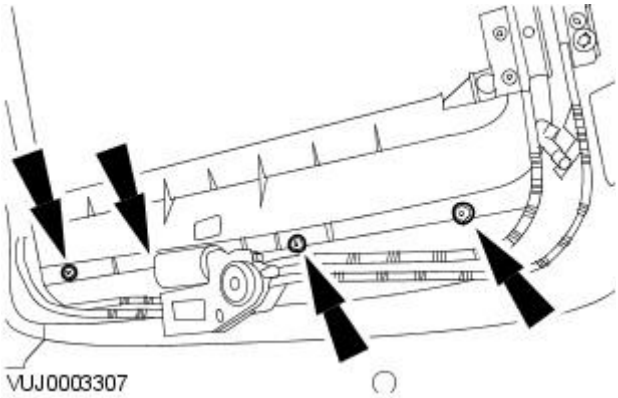

8. Detach the roof opening panel frame.

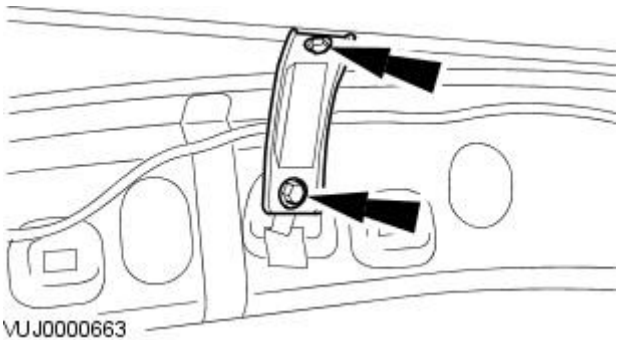

9. Remove the roof opening panel frame retaining brackets.

- Right-hand side shown, left-hand side similar.

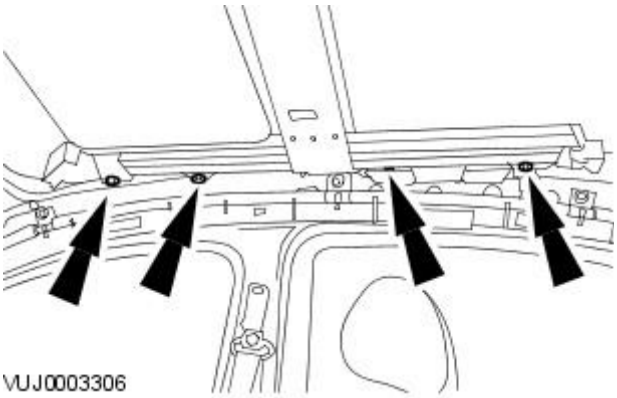

10. CAUTION: Take care to support roof opening panel frame as final bolts are removed.

Detach the roof opening panel frame.

- Right-hand side shown, left-hand side similar.

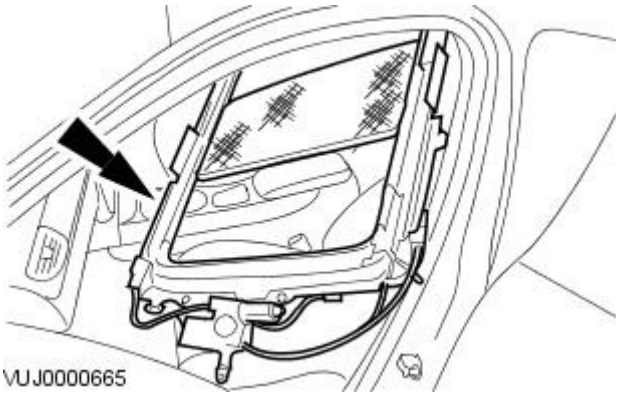

11. Remove the roof opening panel frame.

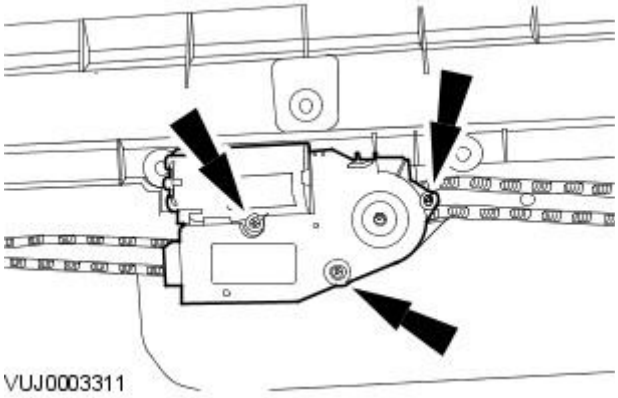

12. Remove the roof opening panel motor.

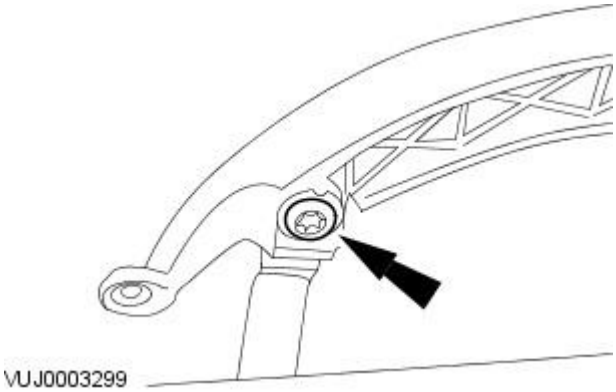

13. Remove the air deflector.

- Right-hand side shown, left-hand side similar.

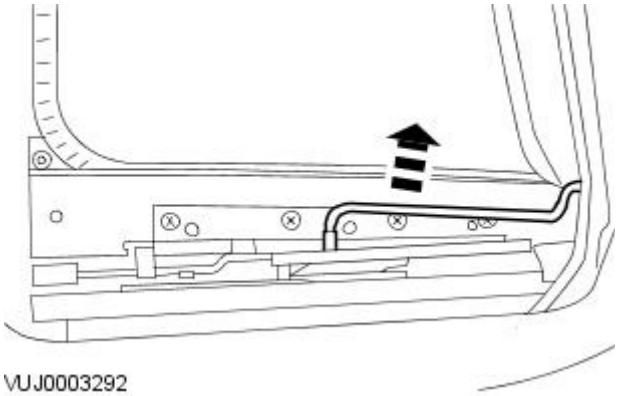

14. Detach the control arms.

- Right-hand side shown, left-hand side similar.

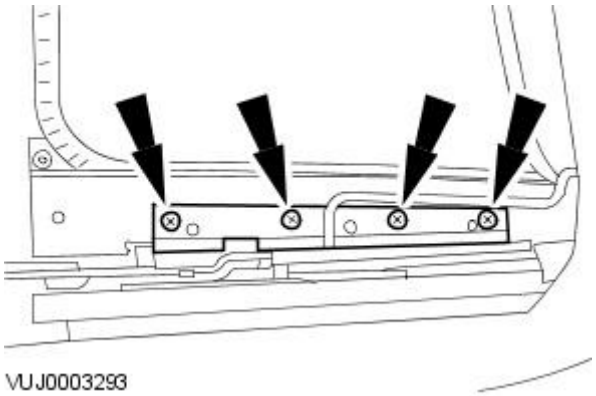

15. Remove the lifter arm retaining plates.

- Right-hand side shown, left-hand side similar.

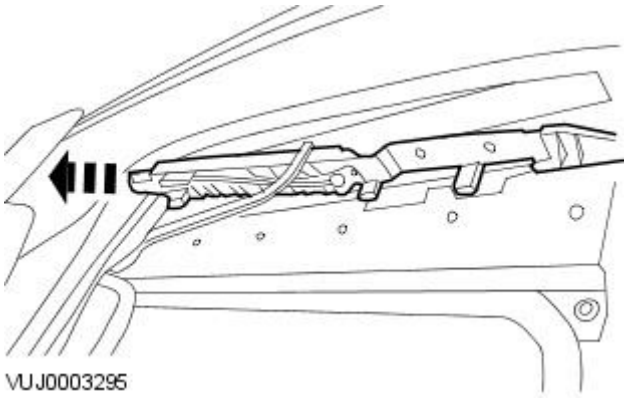

16. Detach the lifter arms.

- Right-hand side shown, left-hand side similar.

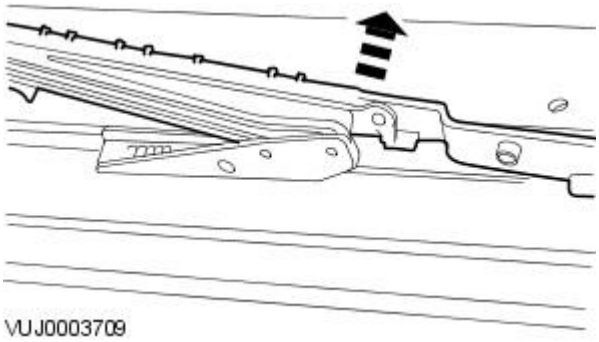

17. Remove the lifter arms.

- Right-hand side shown, left-hand side similar.

Installation

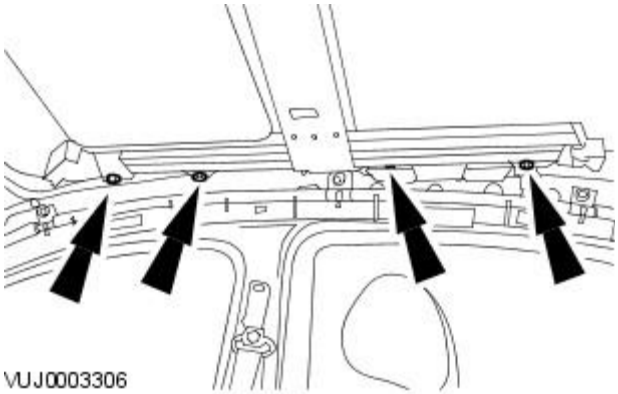

1. To install, reverse the removal procedure.

- Tighten to 9 Nm.

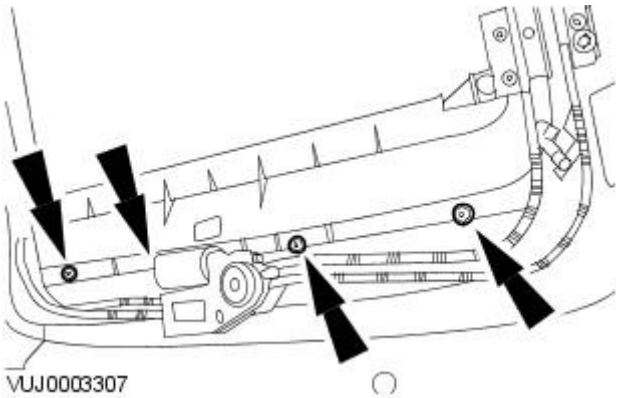

2. Tighten to 9 Nm.

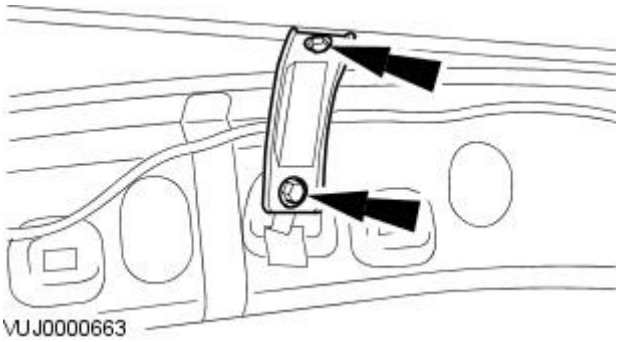

3. Tighten to 9 Nm.

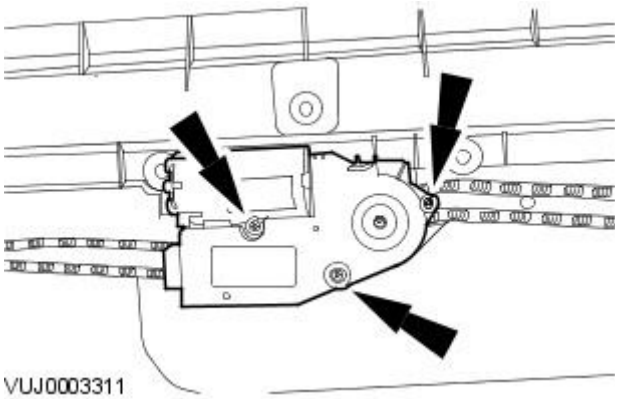

4. Tighten to 3 Nm.

5. CAUTION: If motor oscillation is detected, loosen the motor screws, operate the roof opening panel, then retighten the motor screws. If necessary repeat this procedure.

Syncronize the roof opening panel motor. Refer to Motor Synchronization —Calibration.

6. Check, and if necessary, adjust the roof opening panel alignment. For additional information, refer to Roof Opening Panel Alignment.

Roof Opening Panel - Roof Opening Panel Glass

Removal and Installation

Removal

• NOTE: Make sure the roof opening panel glass is in the closed position.

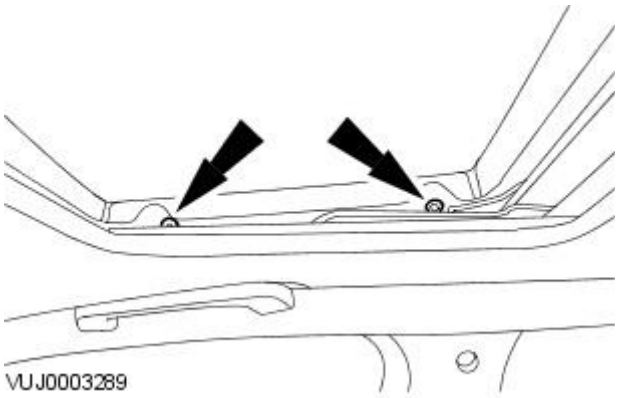

1. Remove the roof opening panel glass screws.

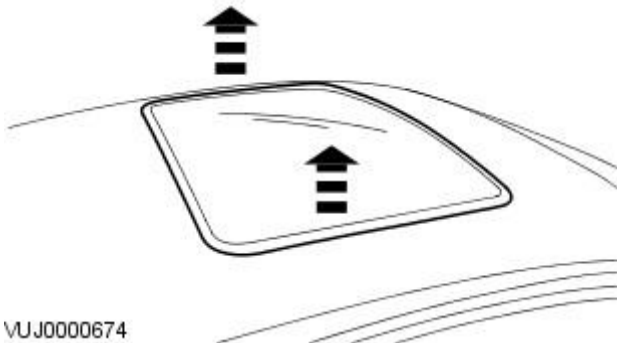

2. Remove the roof opening panel glass.

Installation

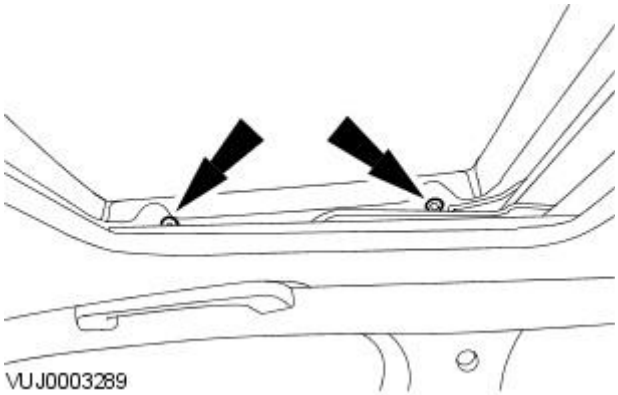

1. To install, reverse the removal procedure.

- Tighten to 3 Nm.

2. Check, and if necessary, adjust the roof opening panel alignment. For additional information, refer to Roof Opening Panel Alignment.

Roof Opening Panel - Roof Opening Panel Motor

Removal and Installation

Removal

1. Remove the overhead console. For additional information, refer to Section 501-12 Instrument Panel and Console.
2. Detach the roof opening panel motor.

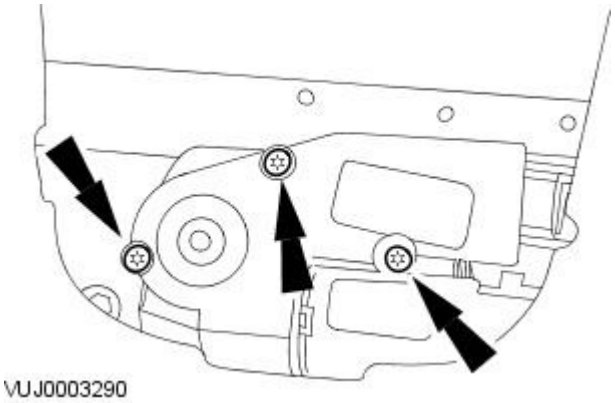

3. Remove the roof opening panel motor.
   - Disconnect the electrical connector.

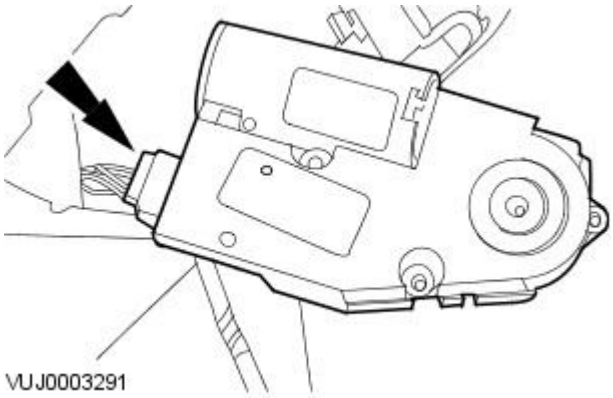

Installation

1. CAUTION: If motor oscillation is detected, loosen the motor screws, operate the roof opening panel, then retighten the motor screws. If necessary repeat this procedure.

   Syncronize the roof opening panel motor. Refer to Motor Synchronization—Calibration.
2. To install, reverse the removal procedure.
   - Tighten to 3 Nm.

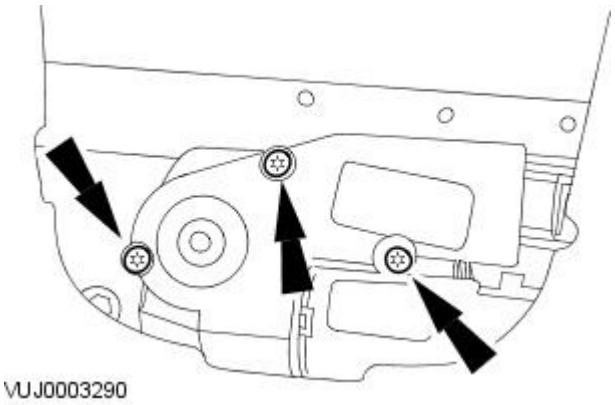

Roof Opening Panel - Roof Opening Panel Shield

Removal and Installation

Removal

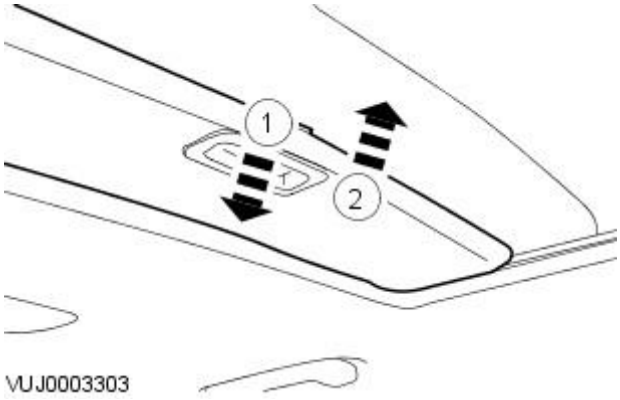

VUJ0003303

1. Partially open the roof opening panel.

2. Detach the front of the roof opening panel shield.

1. Position the center of the roof opening panel shield downwards.
2. Position the roof opening panel shield forwards.

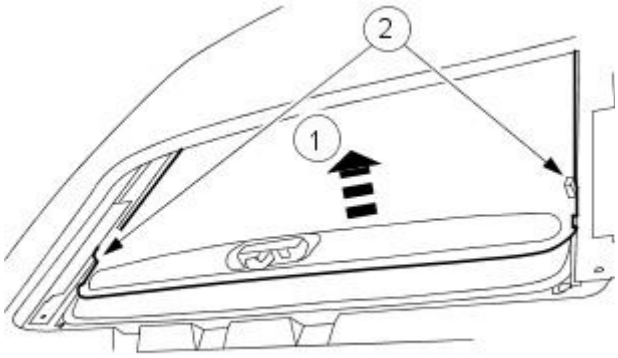

VUJ0003304

3. Fully open the roof opening panel.

4. Detach the roof opening panel shield.

1. Position the center of the roof opening panel shield upwards.
2. Detach the roof opening panel shield guide pads.

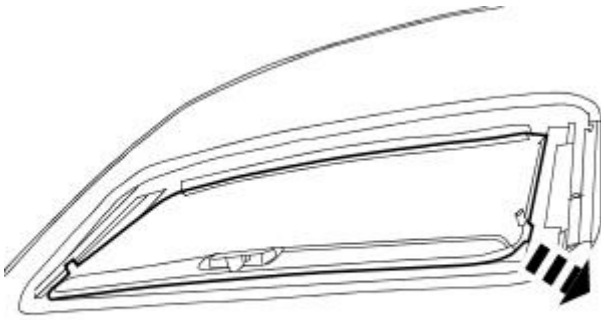

VUJ0003305

5. Remove the roof opening panel shield.

- Rotate the roof opening panel shield.

Installation

1. CAUTION: To prevent damage to the roof opening panel shield use a steel rule to compress the guide pads.

To install reverse the removal procedure.

Roof Opening Panel - Roof Opening Panel Weatherstrip

Removal and Installation

Removal

1. Remove the roof opening panel glass. For additional information, refer to Roof Opening Panel Glass.
2. Remove the roof opening panel glass seal.

Installation

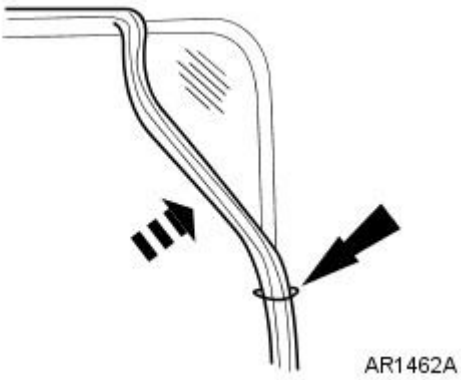

1. CAUTION: Make sure the roof opening panel glass seal is fully seated in the glass channel.

To install, reverse the removal procedure.

- Position the roof opening panel seal seam in the center of the rear facing side of the roof opening glass.

Published: 11-May-2011

Bumpers -

Torque Specifications

Description	Nm	lb-ft	lb-in
Front bumper cover upper securing bolts	7	5	-
Front bumper cover side securing bolts	7	5	-
Rear bumper cover side securing nuts	7	5	-
Rear bumper cover securing nuts	7	5	-
Rear bumper securing bolts	17	13	-

Published: 11-May-2011

Bumpers - Bumpers

Description and Operation

This vehicle is fitted with a chassis mounted aluminium beam and is covered by a one piece color co-ordinated front bumper cover which incorporates the energy absorbing foam. The bumper construction includes air management and brake cooling ducts. The fog lamps are mounted via brackets to the bumper covers. Chrome or body color inserts, side marker lights/reflex (Federal specification vehicles only), and a color co-ordinated removable cover for towing eye access are fitted as standard. Telescopic headlamp washers are optional. The color co-ordinated parking aid sensors are mounted through the bumper cover and are optional with the front parking aid system.

The rear bumper beam is of aluminium construction and is covered by a two piece colour co-ordinated rear bumper cover which incorporates the energy absorbing foam and lower black out panel. Chrome or body color inserts are fitted as standard, and on 4-door vehicles side marker lights/reflex are fitted as standard to Federal specification vehicles. The parking aid sensors are mounted in the lower black out panel and are optional with the parking aid system.

Bumpers - Front Bumper Cover

Removal and Installation

Removal

All vehicles

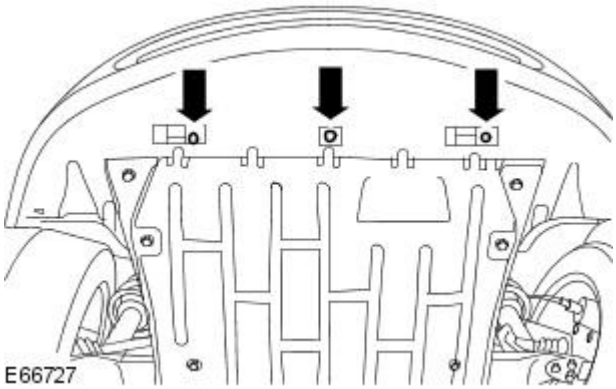

1. Remove the radiator splash shield retaining bolts.

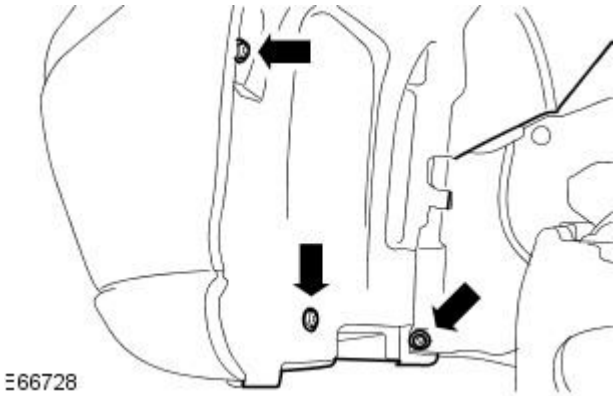

2. NOTE: Left-hand shown, right-hand similar.

Detach the wheel arch liner.

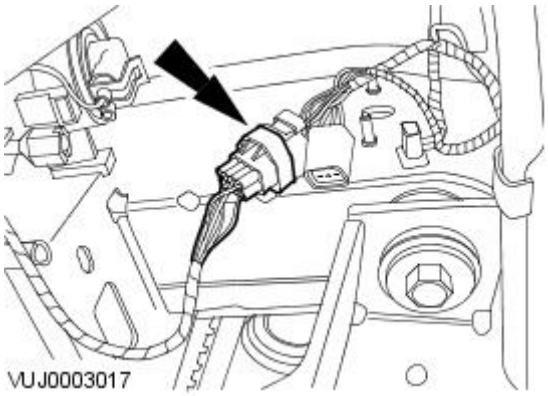

3. Disconnect the bumper wiring harness electrical connector.

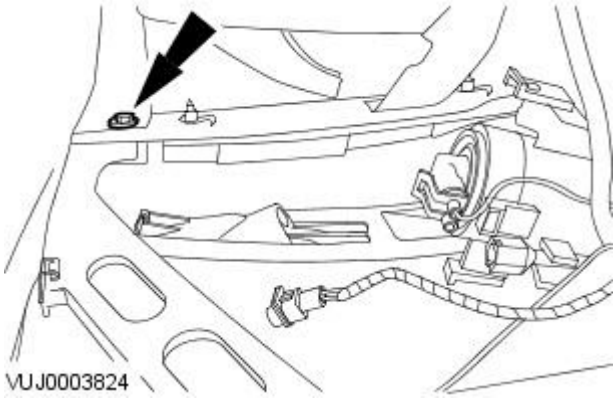

4. NOTE: Left-hand shown, right-hand similar.

Detach the bumper cover.

Vehicles with headlamp washers

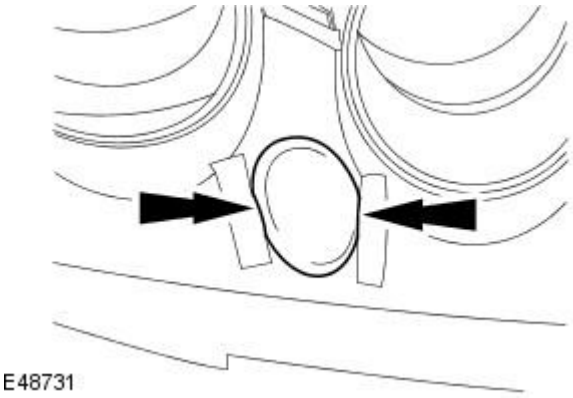

5. NOTE: Left-hand shown, right-hand similar.

Apply suitable tape to the bumper cover to prevent damage to the bumper cover.

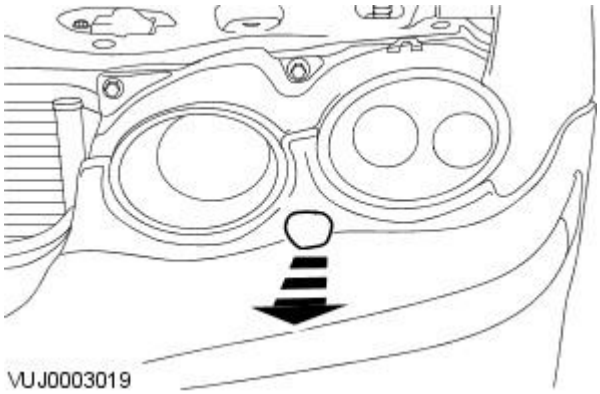

6. NOTE: Left-hand shown, right-hand similar.

Reposition the headlamp washers to the fully open position.

7. NOTE: Left-hand shown, right-hand similar.

Remove the headlamp washer cover.

All vehicles

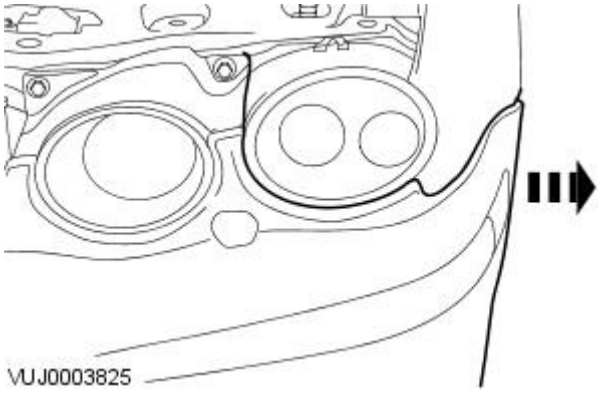

8. NOTE: Left-hand shown, right-hand similar.

Detach the side of the bumper cover from the retaining clips.

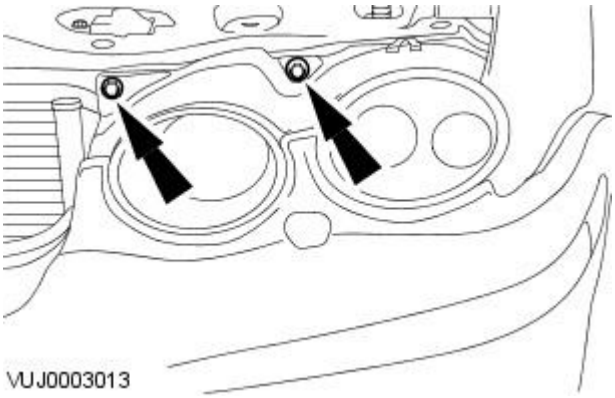

9. CAUTION: Make sure the bumper cover is supported before removing the securing bolts.

• NOTE: Left-hand shown, right-hand similar.

Remove the bumper cover.

- Remove the bumper cover securing bolts.

Installation

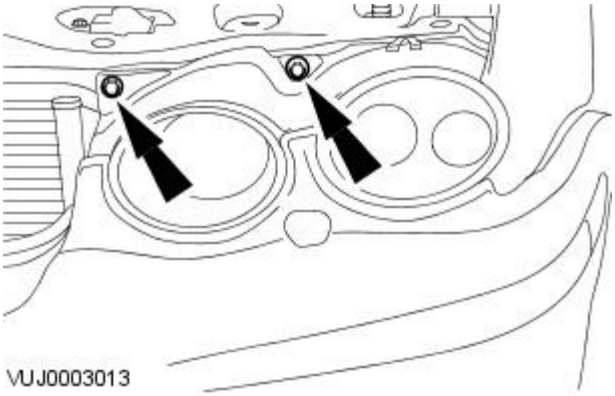

1. To install, reverse the removal procedure.

- Tighten to 7 Nm.

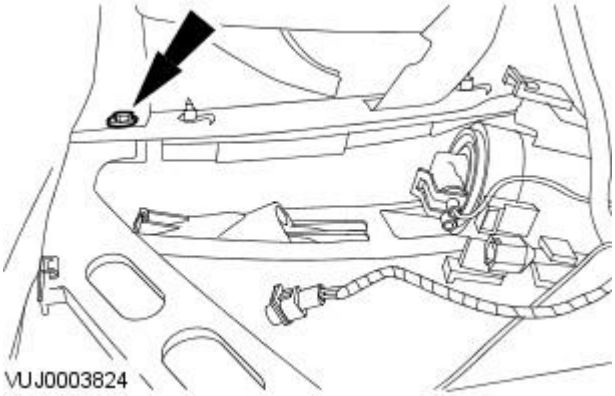

2. Tighten to 7 Nm.

Bumpers - Front Bumper Cover Insert

Removal and Installation

Removal

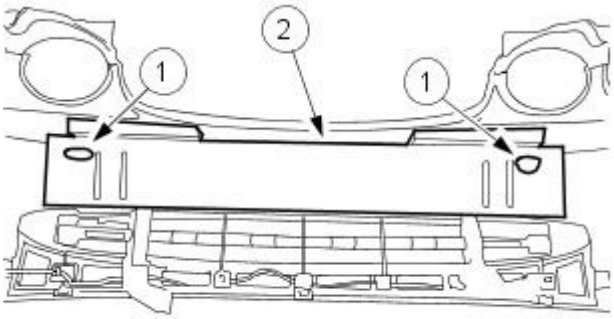

VUJ0004068

1. Remove the front bumper cover. For additional information, refer toSection 501-19 Bumpers.
2. Remove the energy absorbing foam.
    1. Remove the energy absorbing foam retaining clips.
    2. Remove the energy absorbing foam.

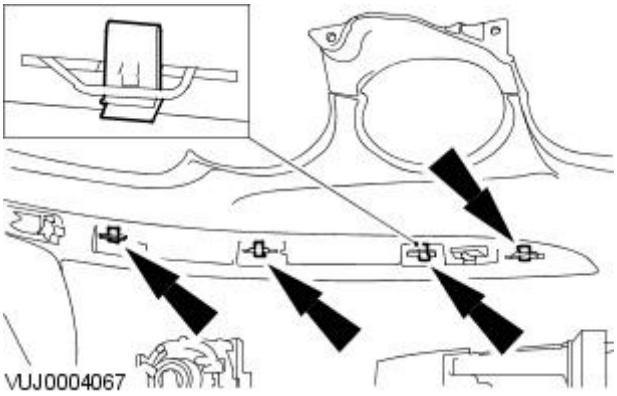

VUJ0004067

3. Remove the bumper insert retaining clips.

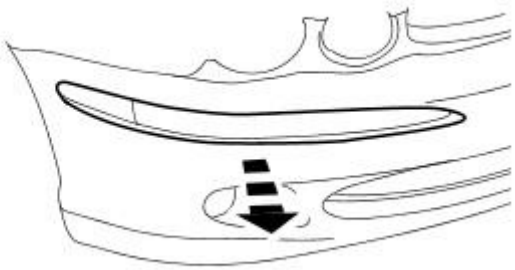

VUJ0004069

4. Using a suitable thin lever to avoid damaging the paintwork, progressively ease the moulding away from the front bumper.

Installation

1. To install, reverse the removal procedure.

Bumpers - Rear Bumper4-Door

Removal and Installation

Removal

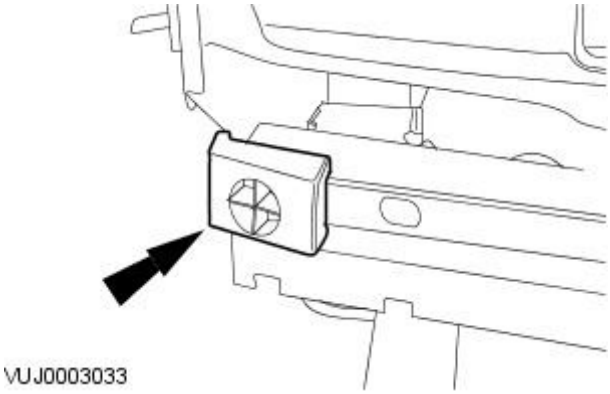

1. Remove the rear bumper cover. For additional information, refer to Bumper Cover—Rear .
2. Remove the bumper insulator.

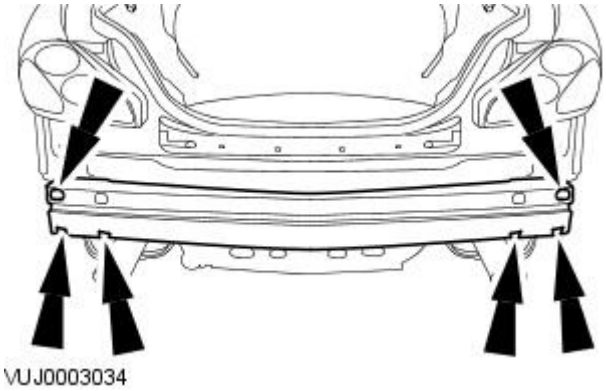

3. Remove the rear bumper.

Installation

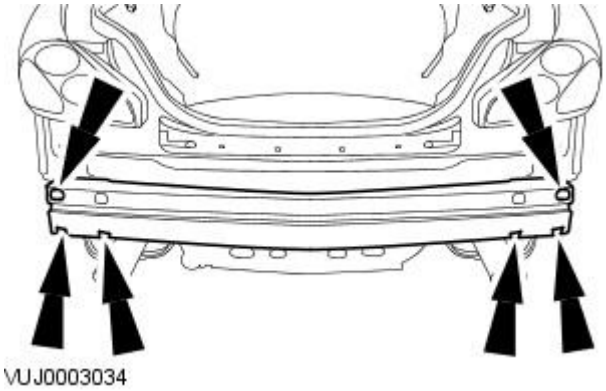

1. To install, reverse the removal procedure.
   - Tighten to 17 Nm,

Bumpers - Rear BumperWagon

Removal and Installation

Removal

1. Remove the rear bumper cover.
   For additional information, refer to: Rear Bumper Cover - Wagon (501-19 Bumpers, Removal and Installation).
2. NOTE: Left-hand shown, right-hand similar.

   Remove the rear bumper insulators.

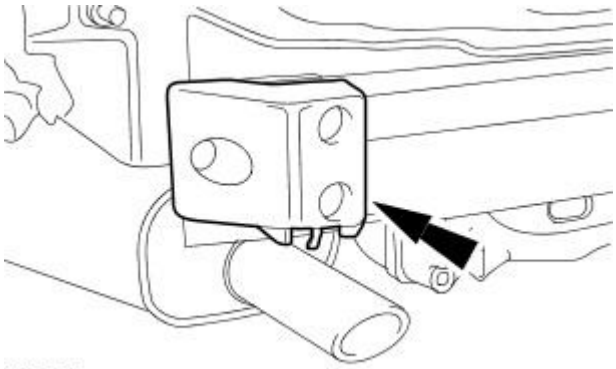

E48557

3. Remove the rear bumper retaining bolts.

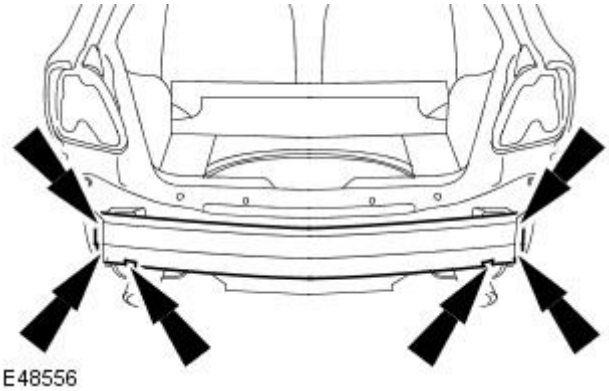

E48556

4. Remove the rear bumper.

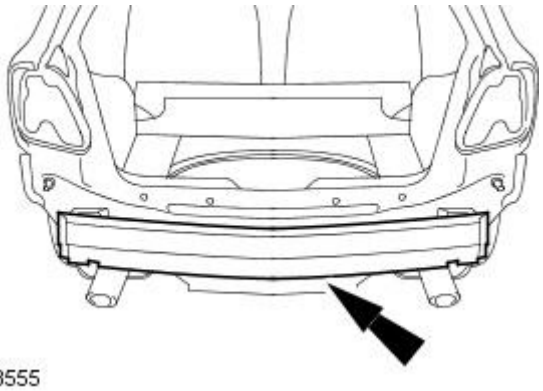

E48555

Installation

1. To install, reverse the removal procedure.
   - Tighten to 17 Nm,

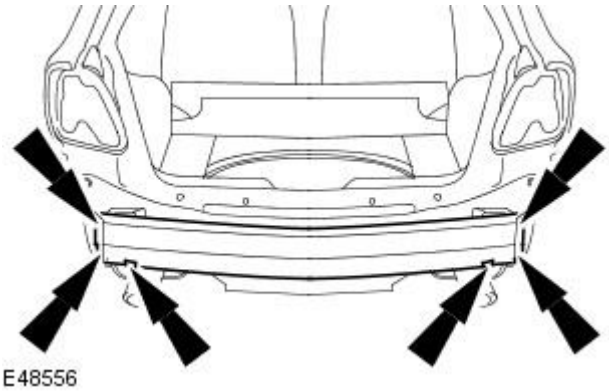

E48556

Bumpers - Rear Bumper Cover4-Door

Removal and Installation

Removal

All Vehicles

1. Raise and support the vehicle. For additional information, refer to Section 100-02 Jacking and Lifting.
2. Detach the rear wheel arch liner.
   - Right-hand side shown, left-hand side similar.

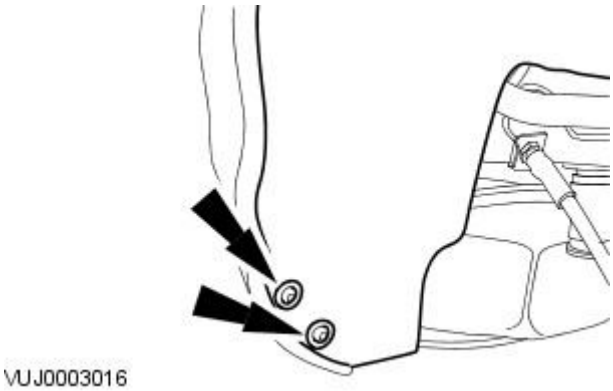

3. Detach the side of the bumper cover.
   - Right-hand side shown, left-hand side similar.

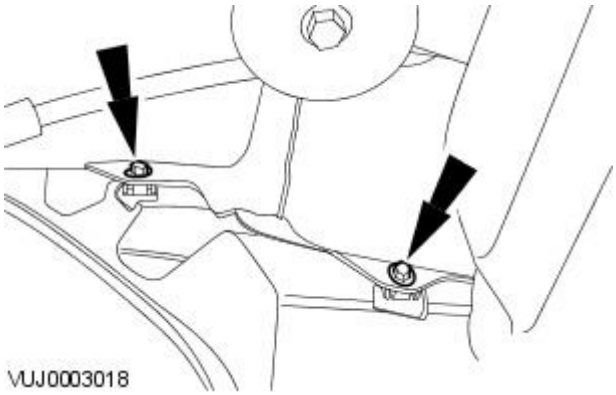

4. Detach the boot liner.
   - Right-hand side shown, left-hand side similar.

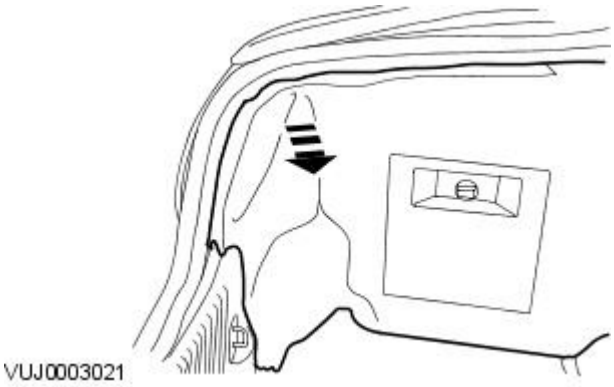

5. Remove the luggage compartment rear trim panel.

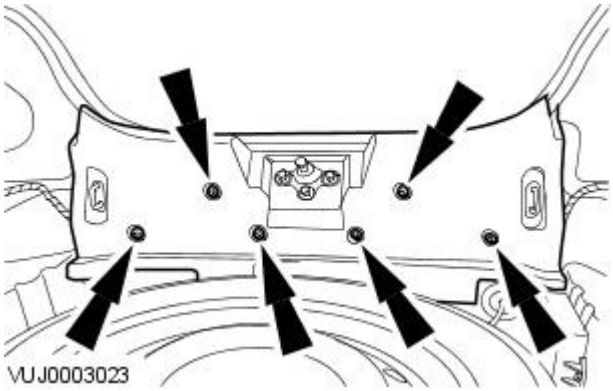

6. Remove the spare wheel.

Vehicles with parking aid

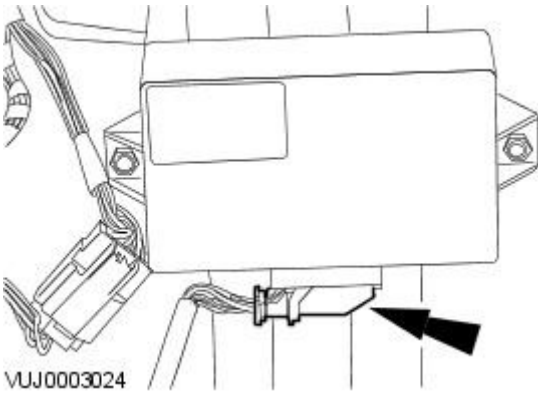

7. Disconnect the electrical connector.

All vehicles

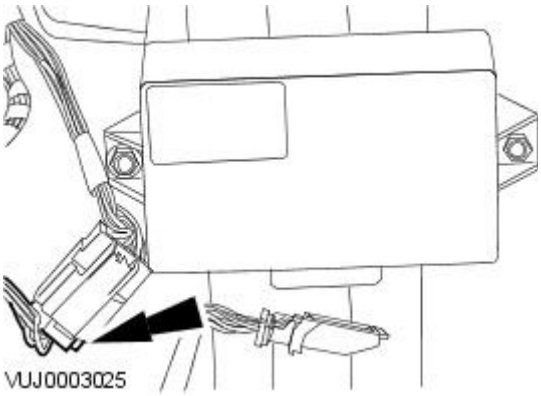

8. Disconnect the electrical connector.

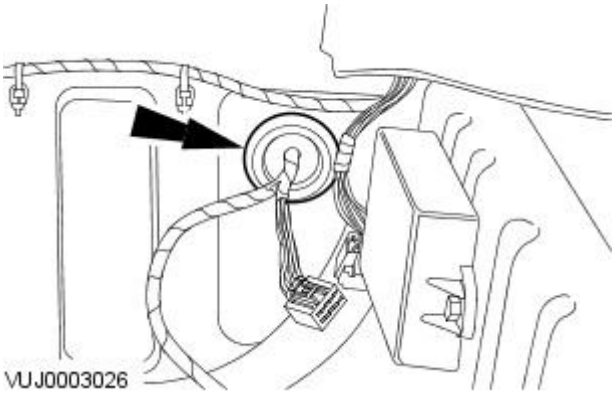

9. Detach the grommet.

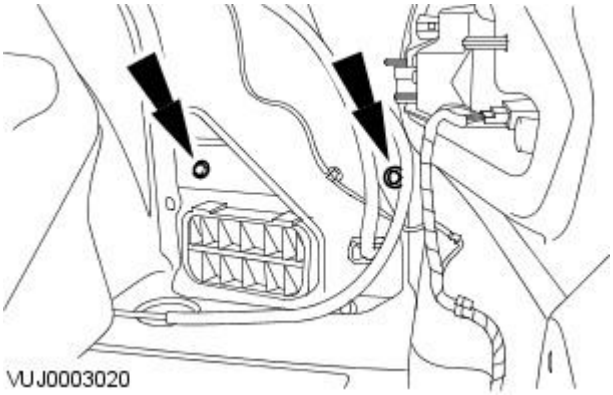

10. Detach the side of the bumper cover.

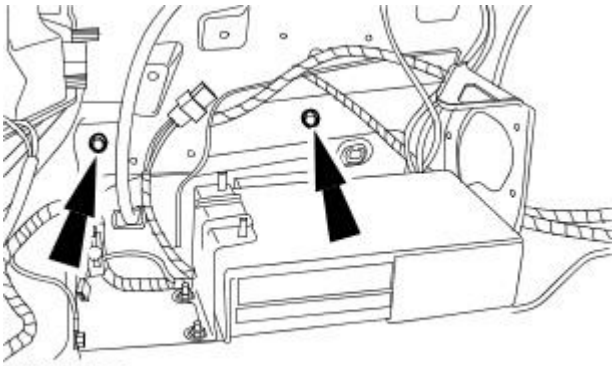

VUJ0003022

11. Detach the side of the bumper cover.

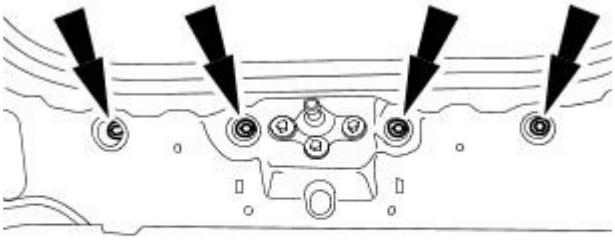

VUJ0003027

12. CAUTION: Make sure the bumper cover is supported before removing the securing nuts.

Remove the bumper cover securing nuts.

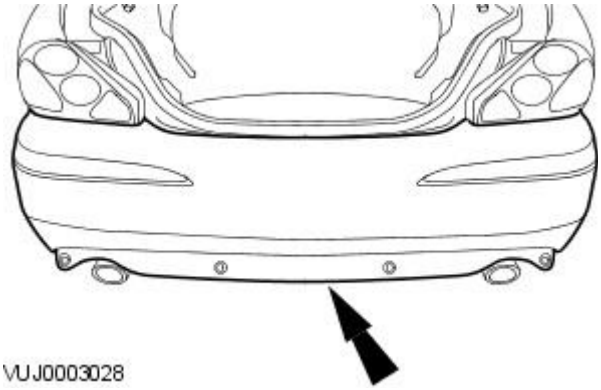

VUJ0003028

13. Remove the bumper cover.

Installation

1. To install, reverse the removal procedure.

2. Tighten to 7 Nm.

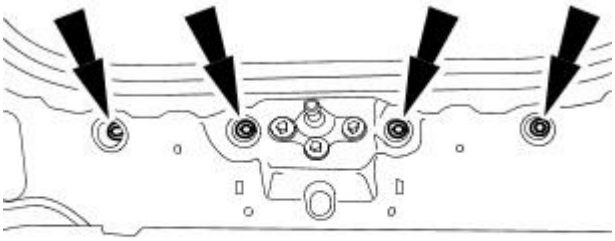

VUJ0003027

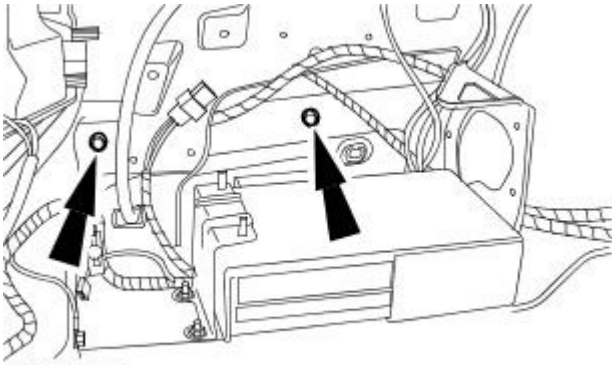

VUJ0003022

3. Tighten to 7 Nm.

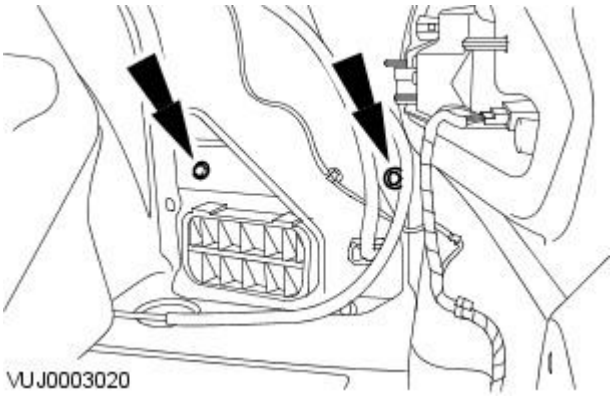

4. Tighten to 7 Nm.

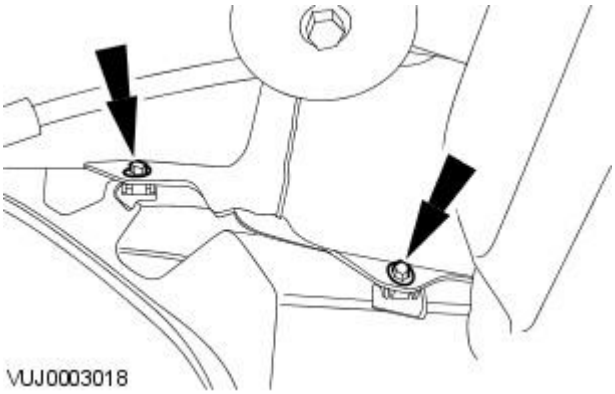

5. Tighten to 7 Nm.

Bumpers - Rear Bumper CoverWagon

Removal and Installation

Removal

All Vehicles

1. Raise and support the vehicle.
   For additional information, refer to: Lifting (100-02 Jacking and Lifting, Description and Operation).
2. NOTE: Right-hand shown, left-hand similar.

   Detach both rear fender splash shields.

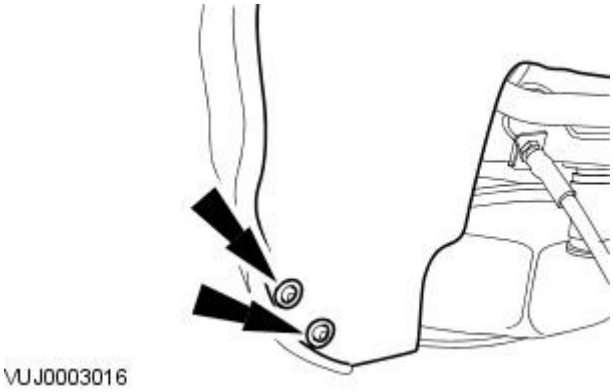

3. NOTE: Right-hand shown, left-hand similar.

   Detach the bumper cover.

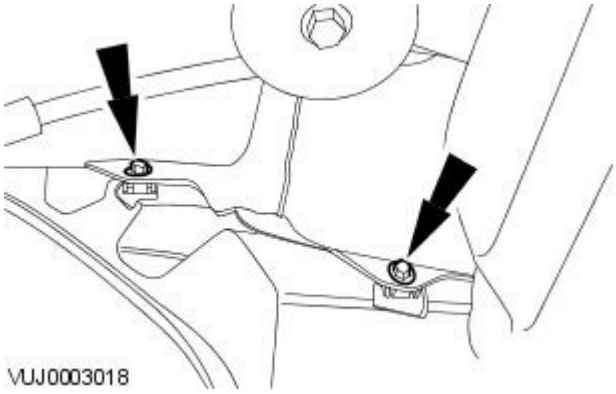

4. Detach the right-hand bumper cover.

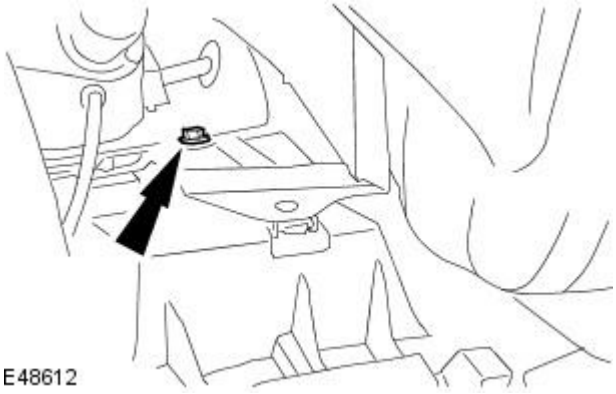

5. Remove the rear lamp assemblies.
   For additional information, refer to: Rear Lamp Assembly - Wagon (417-01 Exterior Lighting, Removal and Installation).
6. Remove the loadspace floor covering retaining screws.

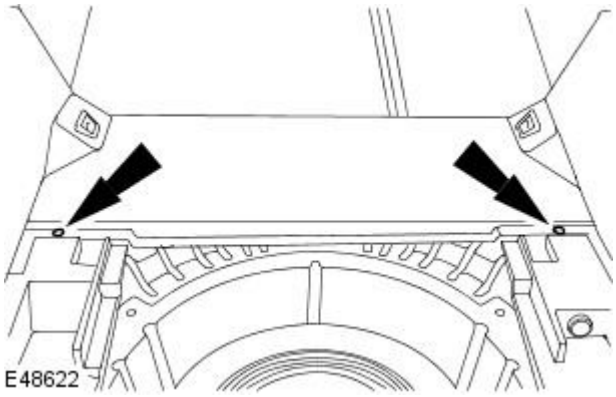

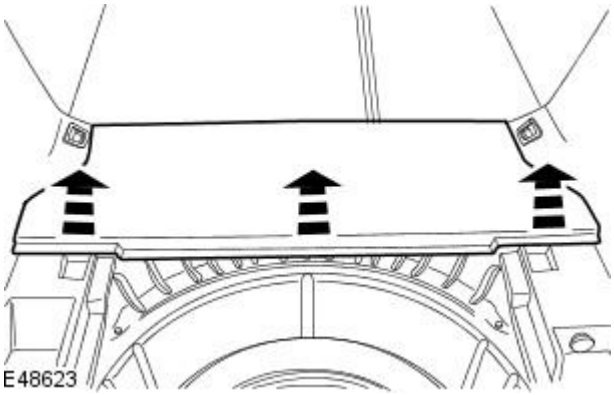

7. Detach the load space floor covering.

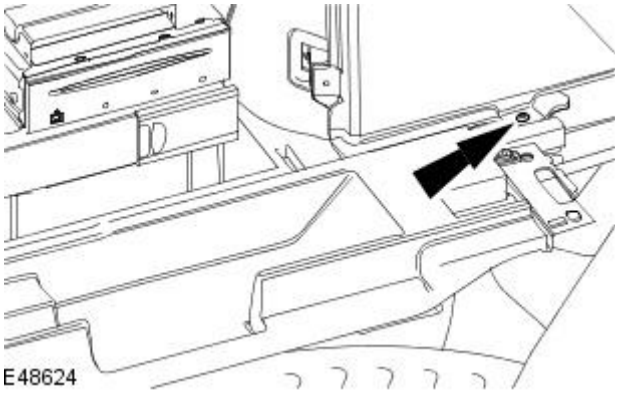

8. Remove the left-hand loadspace stowage compartment retaining screw.

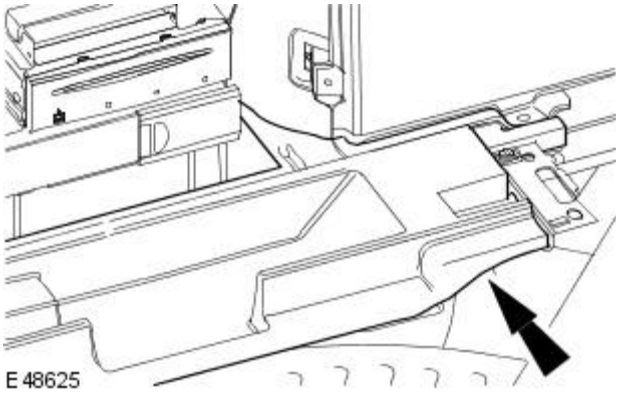

9. Remove the left-hand loadspace stowage compartment.

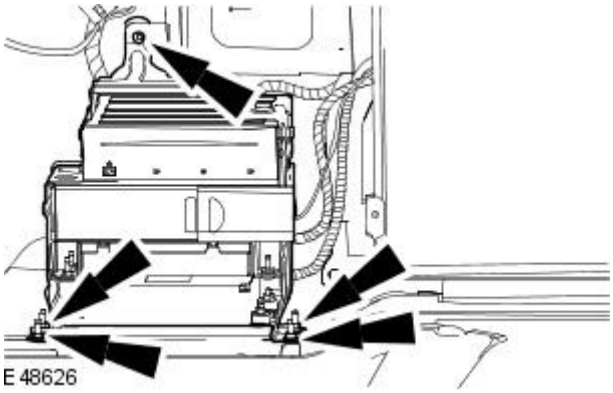

10. Detach the module retaining bracket.

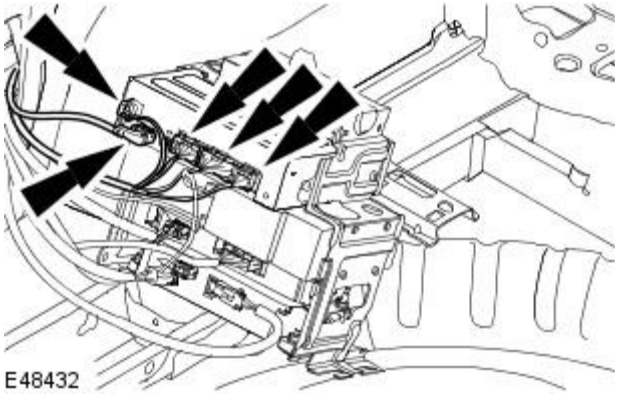

11. Disconnect the navigation system module electrical connectors (if equipped).

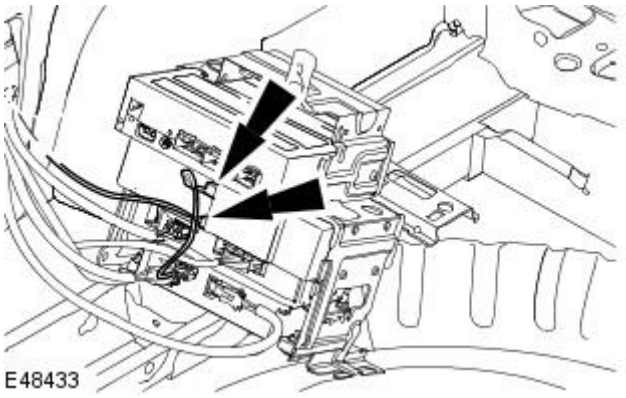

12. Disconnect the compact disc (CD) changer electrical connectors (if equipped).

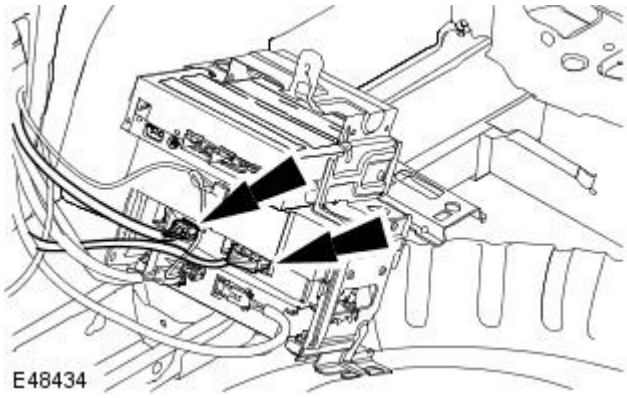

13. Disconnect the voice activated control (VACM) module electrical connectors (if equipped).

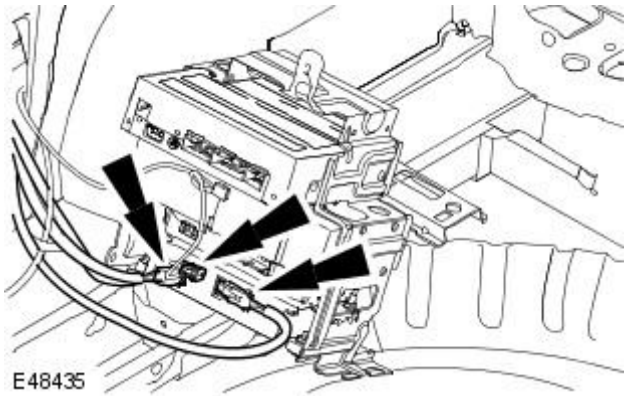

14. Disconnect the cellular phone module electrical connectors (if equipped).

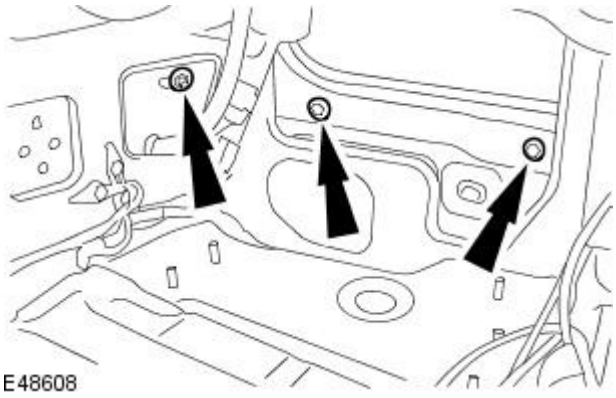

15. Detach the bumper cover.

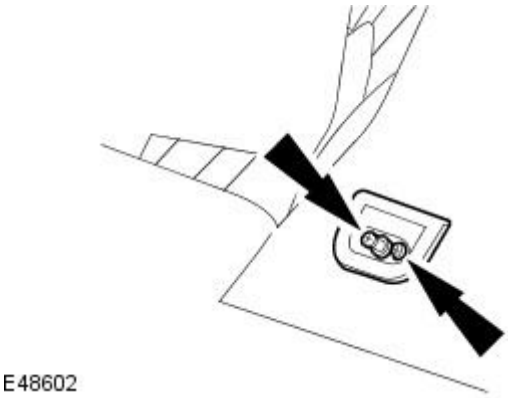

16. Remove the right-hand front retaining hook.

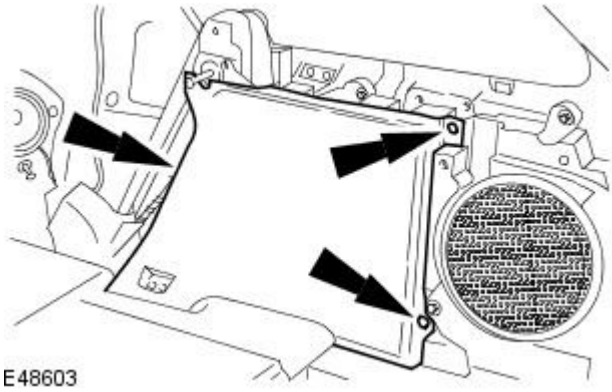

17. Detach the right-hand loadspace side trim panel.

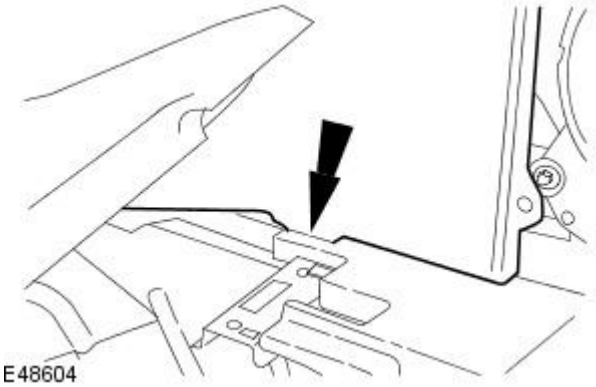

18. Remove the right-hand loadspace side trim panel.

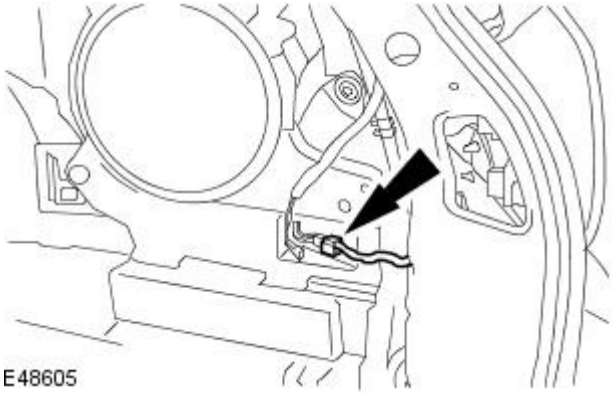

19. Disconnect the subwoofer enclosure electrical connector (if equipped) .

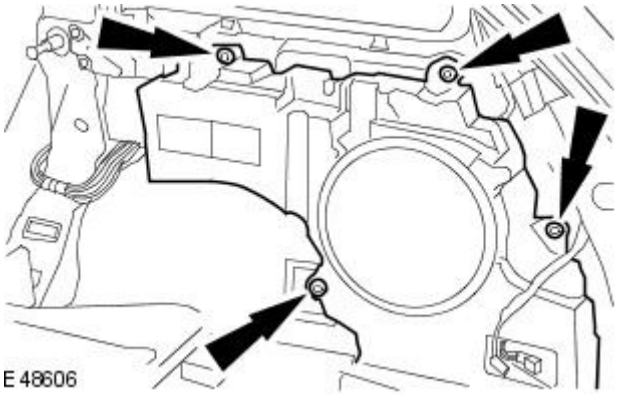

20. Remove the subwoofer enclosure (if equipped).

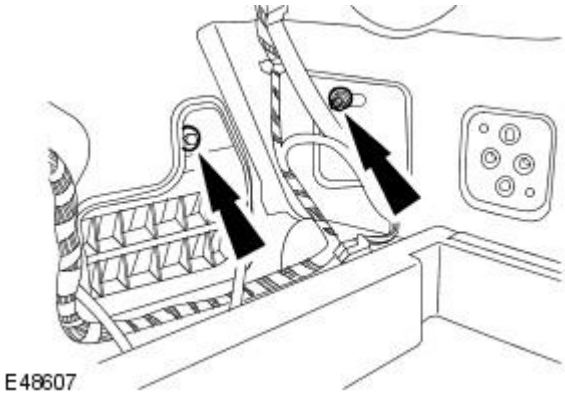

21. Detach the bumper cover.

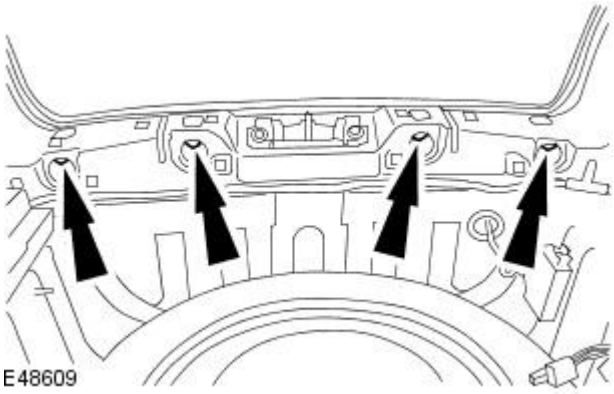

22. CAUTION: Make sure the bumper cover is supported before removing the retaining nuts.

Remove the bumper cover retaining nuts.

Vehicles with parking aid

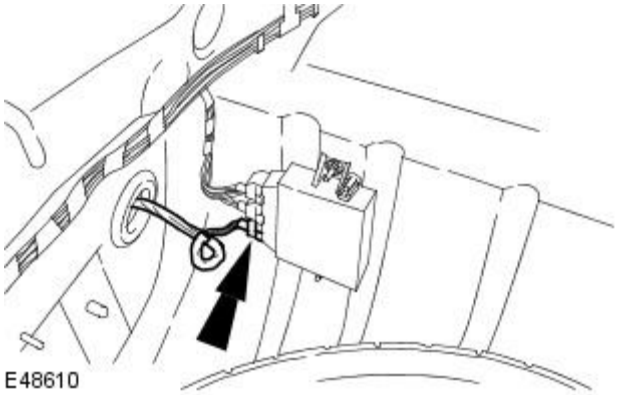

23. Disconnect the electrical connector.

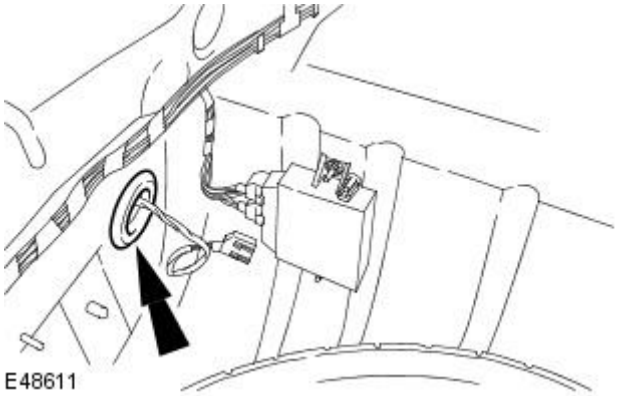

24. Detach the grommet.

All vehicles

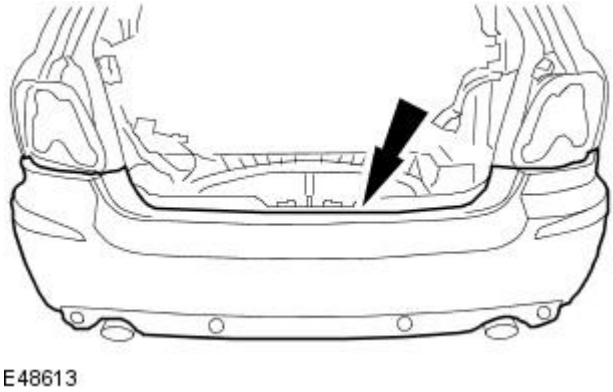

25. Remove the bumper cover.

Installation

1. To install, reverse the removal procedure.

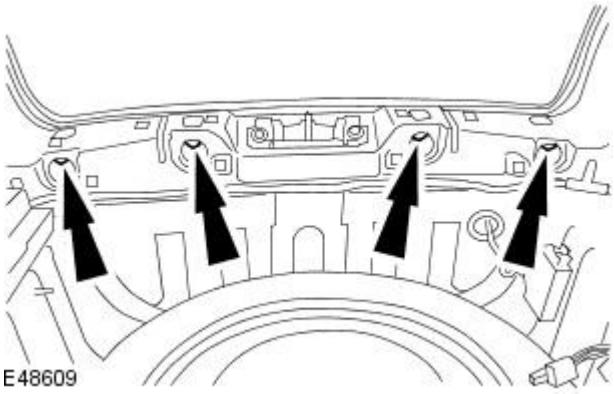

2. Tighten to 4 Nm.

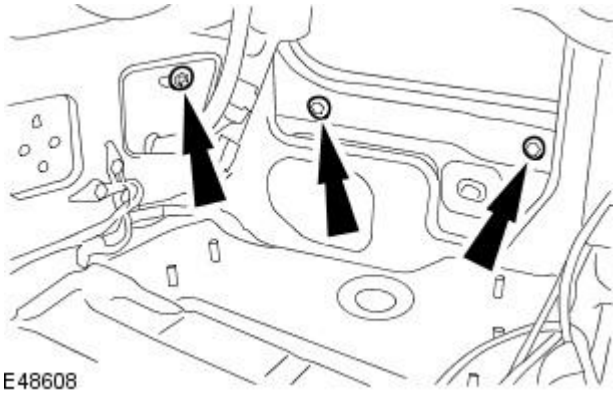

3. Tighten to 4 Nm.

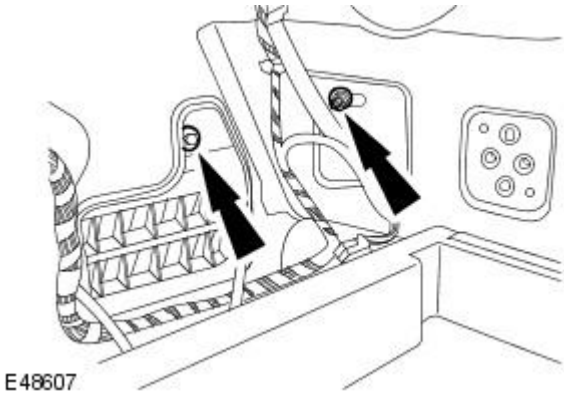

4. Tighten to 4 Nm.

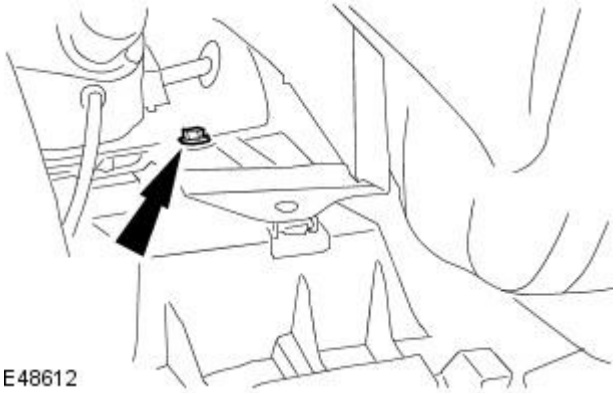

5. Tighten to 4 Nm.

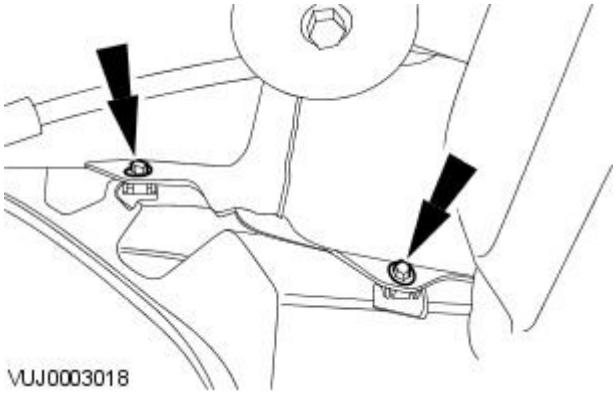

6. Tighten to 4 Nm.

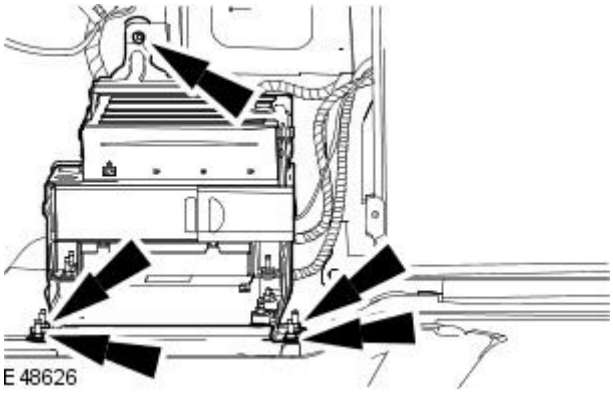

7. Tighten to 8 Nm.

Bumpers - Rear Bumper Cover Insert4-Door

Removal and Installation

Removal

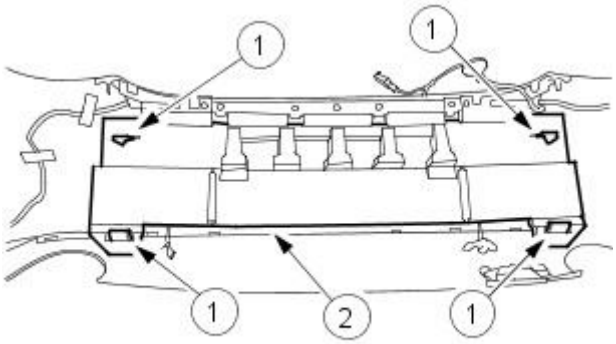

VUJ0004070

1. Remove the rear bumper cover. For additional information, refer toSection 501-19 Bumpers.
2. Remove the energy absorbing foam.
    1. Remove the energy absorbing foam retaining clips.
    2. Remove the energy absorbing foam.

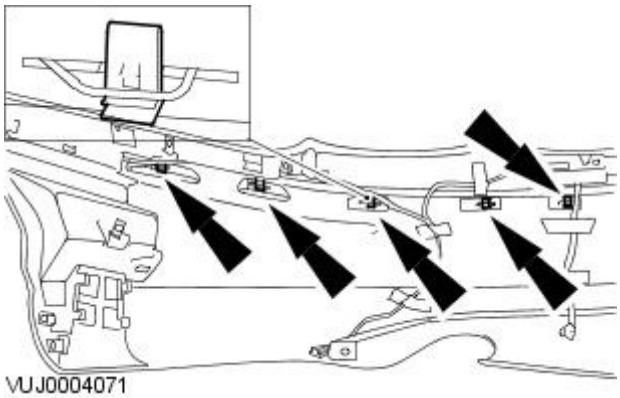

VUJ0004071

3. Remove the bumper insert retaining clips.

VUJ0004072

4. Using a suitable thin lever to avoid damaging the paintwork, progressively ease the moulding away from the front bumper.

Installation

1. To install, reverse the removal procedure.

Bumpers - Rear Bumper Cover InsertWagon

Removal and Installation

Removal

1. Remove the rear bumper cover.
   For additional information, refer to: Rear Bumper Cover - Wagon (501-19 Bumpers, Removal and Installation).
2. Detach the bumper cover insert.

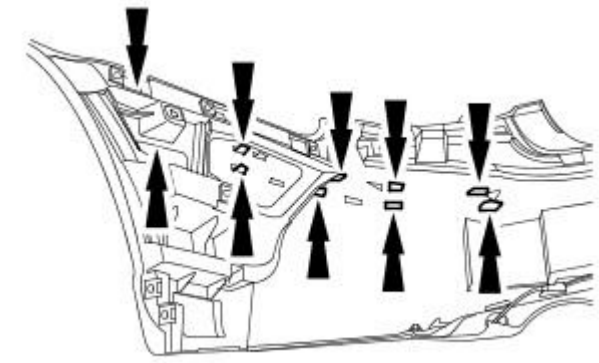

E48667

3. Using a suitable thin lever to avoid damaging the paintwork, progressively ease the bumper cover insert away from the bumper cover.

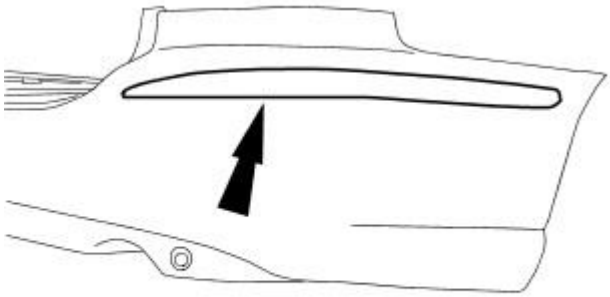

E48668

Installation

1. NOTE: Attach the bumper cover insert to the front of the bumper cover and install towards the rear.

   Install the bumper cover insert.

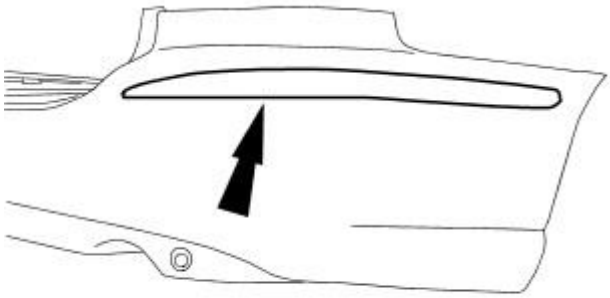

E48668

2. Make sure the bumper cover insert tangs are correctly seated.

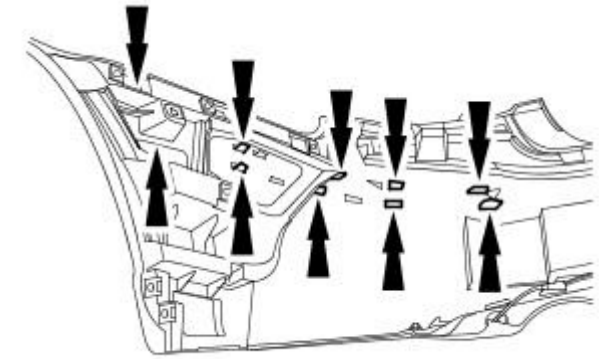

E48667

Published: 11-May-2011

Safety Belt System -

Torque Specifications

Description	Nm	lb-ft	lb-in
Front safety belt buckle and pretensioner retaining bolt	50	37	-
Front safety belt lower anchor retaining bolt	55	41	-
Front safety belt upper retaining bolt	25	18	-
Front safety belt guide retaining bolt	5	-	44
Front safety belt retractor retaining bolt	55	41	-
Front safety shoulder height adjuster retaining bolts	25	18	-
Rear safety belt anchor retaining bolts	55	41	-
Rear safety belt and buckle retaining bolt	55	41	-
Rear safety belt retractor retaining bolt	55	41	-
Rear center safety belt retractor retaining bolt - 4-Door	55	41	-
Rear center safety belt retractor retaining bolt - Wagon	38	28	-

Safety Belt System - Safety Belt System

Description and Operation

• WARNINGS:

To avoid accidental deployment and possible personal injury, the backup power supply must be depleted before repairing or replacing any air bag occupant restraints system (ORS) components. To deplete the backup power supply energy, disconnect the battery ground cable and wait one minute. Failure to follow this instruction may result in personal injury.

Never probe the connectors on the air bag module or pretensioners. Doing so may result in deployment. Failure to follow this instructions may result in personal injury.

All safety belt assemblies including retractors, buckles, front safety belt buckle support assemblies (slider bar), if equipped, child safety seat tether brackets (if equipped) and attaching hardware should be inspected after any collision. New safety belt assemblies should be fitted unless a qualified technician finds the assemblies, show no damage and operate correctly. New safety belt assemblies should also be fitted where safety belt assemblies not in use during a collision, are inspected and damage or incorrect operation is noted. Failure to follow these instructions may result in personal injury.

CAUTION: Electronic modules are sensitive to static electrical charges. If exposed to these charges, damage may result.

• NOTE: Repair is made by replacement only. If a part is replaced and the new part does not correct the condition, install the original part and carry out the diagnostic procedure again.

VUJ0002037

WARNING: All vehicles fitted with the passenger air bag from the factory have a WARNING sticker attached to the instrument panel, PROHIBITING the use of rear facing child seats in the front seating position. Failure to follow this instruction may result in personal injury.

• NOTE: The front seat belts, which incorporate the seat belt retractors and pretensioners are supplied as an assembly and not serviceable components.

The safety belt system fitted to the vehicle utilizes the conventional lap and diagonal three point fixing. The front and rear safety belts use a conventional static type buckle which is attached to the seat frame of each front seat and directly to the floor pan underneath the rear seats.

The safety belt buckle and pretensioner which is attached to the driver seat is fitted with a switch, which is connected through a wiring harness to a warning indicator which is housed within the instrument cluster. When the ignition is first turned on the warning indicator will illuminate only if the safety belt is not fastened. If the safety belt is fastened before the ignition is turned on the circuit is broken and the indicator will remain off. The safety belt buckle pretensioners will deploy at the same time as the front or side air bags. The air bag control module receives information on the status of the safety belt buckles from a switch contained in the buckle.

The front safety belt retractors incorporate a load limiting device, which reduces occupant injury in the event of a crash. The safety belt retractors, which are mounted within the base of the 'B' pillars, incorporate a torsion bar load limiting device. This device consists of a retractor reel which is mounted onto a spindle (torsion bar) which once the sensor has locked the retractor reel and a predetermined load is applied, twists and allows additional webbing into the system. The deceleration force required to initiate this sequence is approximately the same as that required to initiate air bag deployment. The torsion bar load limiting device will only react if the safety belt is in use at the time of the impact.

It should be considered that during any event that utilizes the full capability of the safety belts, the webbing may have been elongated and the torsion bar may have twisted. For this reason, if a vehicle is involved in an accident which results in the deployment of the airbag (s), all the safety belts that were in use at the time of the accident MUST NOT be reused, NEW safety belts MUST be installed.

EMERGENCY LOCKING RETRACTOR (ELR)

The retractors in all seat positions feature ELR. During any period of sudden deceleration, or under lateral load when cornering at speed, a sensor weight within the safety belt retractor moves a locking pawl against the teeth on the retractor reel, which then locks the retractor preventing any further release of webbing. As soon as the load applied onto the retractor through the safety belt webbing is removed the locking pawl releases the retractor reel and normal movement is returned to the retractor.

AUTOMATIC LOCKING RETRACTOR (ALR)

Automatic Locking Retractors (ALR) are not fitted in all markets (currently only in the U.S.A., Dominican Republic and Mexico) and are installed in all passenger seat positions. The safety belt webbing on these are clearly marked to show their operating feature. The ALR feature is initiated by pulling all of the webbing from the retractor with the buckle fastened, when the webbing is then released as it retracts the retractor locks allowing travel in only one plane thus producing a fixed length restraint and preventing the safety belt from introducing slack, making any child seat it may be restraining insecure. The ALR mode of the retractor is disengaged by allowing the unfastened webbing to fully retract on to the reel.

BELT MINDER - JAPAN ONLY - VEHICLES FROM 2009MY

The belt minder function is an additional warning to the seat belt warning reminder for the driver's seat only. Under conditions where the driver is unbelted or becomes unbelted and the vehicle is moving above 10 km/h (6 mph) then an additional warning (generated by the GEM

(generic electronic module)) of an intermittent tone will start or resume accompanied by the seat belt warning lamp flashing in the instrument cluster. The intermittent tone and flashing lamp will last for 10 seconds, followed by a 10 second period with no tone or flashing lamp. This cycle of 10 seconds on and 10 seconds off is repeated for up to 190 seconds. The warnings will stop when the driver has the seat buckle fastened or the vehicle speed is less than 5 km/h (3 mph) .

The RCM (restraints control module) monitors the status of the driver's seat buckle and transmits this status to the GEM. The GEM uses the seat buckle status and compares it with vehicle speed and driver seat occupancy (ignition on signal determines driver's seat is occupied). If the driver's seat belt is not buckled and the vehicle speed is above 10 km/h (6 mph) then the GEM initiates the belt minder warning.

Safety Belt System - Safety Belt System

Diagnosis and Testing

Inspection and Verification

1. **1.** Verify the customer concern.
2. **2.** Visually inspect for obvious signs of mechanical damage.

Visual inspection
• Damaged/frayed webbing • Damaged buckles • Damaged tongues

3. **3.** If the fault is not visually evident determine the symptom(s) and proceed to the diagnostic trouble code (DTC) flash code index.

Safety information

• WARNINGS:

To avoid accidental deployment and possible personal injury, the backup power supply must be depleted before repairing or replacing any air bag SRS components. To deplete the backup power supply energy, disconnect the battery ground cable and wait for one minute. Failure to follow this instruction may result in personal injury.

Always wear safety glasses when repairing an air bag SRS vehicle and when handling an air bag module. Failure to follow this instruction may result in personal injury.

Carry a live air bag module with the air bag and trim cover pointed away from your body. This will reduce the risk of injury in the event of an accidental deployment. Failure to follow this instruction may result in personal injury.

Do not set a live air bag module down with the trim cover face down. Failure to follow this instruction may result in personal injury.

After deployment, the air bag surface can contain deposits of sodium hydroxide, a product of the gas generant combustion that is irritating to the skin. Wash your hands with soap and water afterwards. Failure to follow this instruction may result in personal injury.

Never probe the connectors on the air bag module. Doing so may result in air bag deployment. Failure to follow this instruction may result in personal injury.

1. **1.** These warnings should be observed whenever working on the SRS and/or it's components.

Flash codes

Self check

1. **1.** Turn the ignition switch to the **ON** position.
2. **2.** Observe the airbag warning light function.

- Warning light **ON** solid for six seconds.
- Warning light goes off and stays off.

Fault on system

3. **3.** Turn the ignition switch to the **ON** position.
4. **4.** Observe the airbag warning light function.

- Warning light **ON** solid for six seconds.
- Warning light goes off for two seconds.
- Warning light flashes the appropriate number of times for the fault logged (see below).
- Warning light goes off for two seconds.
- The sequence is repeated five times.
- Warning light stays **ON** until the ignition is switched **OFF**.

Example

Flash code 16 would be shown as lamp **ON** for one occurence of 0.5 seconds, then lamp **OFF** for one second, followed by six occurences of lamp flashing **ON/OFF** for 0.5 seconds each (1 - 6).

Poor Retraction

• WARNINGS:

In the event of an incident in which the air bags have been deployed, **ALL** safety belts that were in use at the time of the incident must be removed and new safety belts must be installed. Failure to follow this instruction may result in personal injury.

After five incidents involving the deployment of SRS components, the restraints control module must be replaced. Failure to follow this instruction may result in personal injury.

If a safety belt does not retract correctly, check that the anchor covers and trim bezels are correctly installed and not rubbing against the safety belt webbing. Where necessary, check that the safety belt webbing is not rubbing at one end of the retractor cover slot and , if so,

correct by loosening the retaining bolt, aligning the retractor to centralize the safety belt webbing and retighten the bolt.

The vehicle is equipped with two front and three rear inertia reel safety belts. These safety belts are **dual sensitive** which means that they have:

- a vehicle motion sensor, which locks the safety belt webbing under braking, cornering, on steep hills and in adverse camber conditions
- a webbing motion sensor, which locks when the safety belt webbing is quickly extracted.

Both systems should be fully operational and can be checked by the tests below.

Vehicle Motion Sensor Test

Either of the following two procedures may be used to check correct operation of the vehicle motion sensor.

Both methods require two people, but note that people of larger than normal size should not be asked to conduct these tests. This is to avoid the possibility of a fully unrolled safety belt webbing being mistaken for a correctly locked safety belt retractor.

Test Method 1 (braking)

WARNING: It is important that during this test, the wearer allows the safety belt to provide the restraint, the wearer should not attempt to anticipate the sudden deceleration. However, both the driver and the passenger must prepare themselves for the possibility that the safety belt will not lock. Failure to follow this instruction may result in personal injury.

- Select a suitable road. Make sure that the road is clear and that full visibility is maintained at all times.
- Both driver and passenger should adopt normal, comfortable seating positions, with safety belts worn in a normal fashion.
- Do not exceed 6 mph (10 km/h) for this test.
- Make sure that all passengers are aware of when the driver will brake.
- Apply the foot brake sharply to stop the vehicle. If the vehicle motion sensitive lock mechanism is operating correctly, the safety belt webbing will lock and restrain the wearer.
- Conduct the test twice in each front and rear passenger seat position.
- Any safety belt retractor which does not restrain the wearer during this test must not be reused. A new safety belt must be installed.

Test Method 2 (turning circle)

This method requires a flat open area, sufficient for the vehicle to be driven in a continuous circle on full lock.

- The passenger should occupy a rear seat with the safety belt correctly adjusted.
- With the steering on full lock, drive the vehicle in a continuous circle at 10 mph (16 km/h). Do not exceed 10 mph (16 km/h).
- When the speed is stable, the passenger should attempt to slowly extract the safety belt webbing from each safety belt retractor in turn. If the vehicle motion sensitive lock mechanism is operating correctly, it will not be possible to extract the webbing.
- Any safety belt retractor from which it is possible to extract the webbing during this test must not be used. A new safety belt must be installed.

Safety Belt Webbing Sensor Test

With the vehicle stationary and on level ground take firm hold of the safety belt webbing and pull out quickly. The retractor should lock within 0.25 metre (10 inches), preventing further webbing pay out. Any safety belt retractor from which it is possible to extract further webbing must not be used. A new safety belt must be installed.

Diagnostic trouble code (DTC) flash code index

DTC	Condition	Possible source	Action
B2292 Flash code 33 - driver side PID $5954/5961 (bit 7)	Safety belt pretensioner circuit fault	• Pretensioner resistance low on squib	For driver side pretensioner circuit tests, GO to Pinpoint Test A.
B2292 Flash code 33 - driver side PID $5954/5961 (bit 6)	Safety belt pretensioner circuit fault	• Pretensioner circuit; open circuit	For driver side pretensioner circuit tests, GO to Pinpoint Test A.
B2292 Flash code 33 - driver side PID $5954/5961 (bit 5)	Safety belt pretensioner circuit fault	• Pretensioner circuit; short circuit to battery	For driver side pretensioner circuit tests, GO to Pinpoint Test A.
B2292 Flash code 33 - driver side PID $5954/5961 (bit 4)	Safety belt pretensioner circuit fault	• Pretensioner circuit; short circuit to ground	For driver side pretensioner circuit tests, GO to Pinpoint Test A.
B2292 Flash code 34 - front passenger side PID $5954/5961 (bit 3)	Safety belt pretensioner circuit fault	• Pretensioner resistance low on squib	For passenger side pretensioner circuit tests, GO to Pinpoint Test B.
B2292 Flash code 34 - front passenger side PID $5954/5961 (bit 2)	Safety belt pretensioner circuit fault	• Pretensioner circuit; open circuit	For passenger side pretensioner circuit tests, GO to Pinpoint Test B.
B2292 Flash code 34 - front passenger side PID $5954/5961 (bit 1)	Safety belt pretensioner circuit fault	• Pretensioner circuit; short circuit to battery	For passenger side pretensioner circuit tests, GO to Pinpoint Test B.
B2292 Flash code 34 - front passenger side PID $5954/5961 (bit 0)	Safety belt pretensioner circuit fault	• Pretensioner circuit; short circuit to ground	For passenger side pretensioner circuit tests, GO to Pinpoint Test B.
B2292	Safety belt reel	• Retractor pretensioner resistance low on	For driver side reel pretensioner circuit

DTC	Condition	Possible source	Action
Flash code 38 - driver side PID $5954/5961 (bit 7)	pretensioner circuit fault	squib	tests, GO to Pinpoint Test E.
B2292 Flash code 38 - driver side PID $5954/5961 (bit 6)	Safety belt reel pretensioner circuit fault	• Retractor pretensioner circuit; open circuit	For driver side reel pretensioner circuit tests, GO to Pinpoint Test E.
B2292 Flash code 38 - driver side PID $5954/5961 (bit 5)	Safety belt reel pretensioner circuit fault	• Retractor pretensioner circuit; short circuit to battery	For driver side reel pretensioner circuit tests, GO to Pinpoint Test E.
B2292 Flash code 38 - driver side PID $5954/5961 (bit 4)	Safety belt reel pretensioner circuit fault	• Retractor pretensioner circuit; short circuit to ground	For driver side reel pretensioner circuit tests, GO to Pinpoint Test E.
B2292 Flash code 39 - front passenger side PID $5954/5961 (bit 3)	Safety belt reel pretensioner circuit fault	• Retractor pretensioner resistance low on squib	For passenger side reel pretensioner circuit tests, GO to Pinpoint Test F.
B2292 Flash code 39 - front passenger side PID $5954/5961 (bit 2)	Safety belt reel pretensioner circuit fault	• Retractor pretensioner circuit; open circuit	For passenger side reel pretensioner circuit tests, GO to Pinpoint Test F.
B2292 Flash code 39 - front passenger side PID $5954/5961 (bit 1)	Safety belt reel pretensioner circuit fault	• Retractor pretensioner circuit; short circuit to battery	For passenger side reel pretensioner circuit tests, GO to Pinpoint Test F.
B2292 Flash code 39 - front passenger side PID $5954/5961 (bit 0)	Safety belt reel pretensioner circuit fault	• Retractor pretensioner circuit; short circuit to ground	For passenger side reel pretensioner circuit tests, GO to Pinpoint Test F.
B2434 Flash code 51	Driver safety belt switch circuit fault	• Driver safety belt switch circuit: short circuit to ground	For driver safety belt switch circuit tests, GO to Pinpoint Test C.
B2435 Flash code 51	Driver safety belt switch circuit fault	• Driver safety belt switch circuit: resistance out of range	For driver safety belt switch circuit tests, GO to Pinpoint Test C.
B2691 Flash code 51	Driver safety belt switch circuit fault	• Driver safety belt switch circuit; open circuit or short circuit to battery	For driver safety belt switch circuit tests, GO to Pinpoint Test C.
B2692 Flash code 52	Passenger safety belt switch circuit fault	• Passenger safety belt switch circuit; open circuit or short circuit to battery	For passenger safety belt switch circuit tests, GO to Pinpoint Test D.
B2438 Flash code 52	Front passenger safety belt switch circuit fault	• Passenger safety belt switch circuit: short circuit to ground	For passenger safety belt switch circuit tests, GO to Pinpoint Test D.
B2439 Flash code 52	Front passenger safety belt switch circuit fault	• Passenger safety belt switch circuit: resistance out of range	For passenger safety belt switch circuit tests, GO to Pinpoint Test D.

Additional tests for changes to be introduced

DTC	Condition	Possible source	Action
B2909 Flash code 16 PID $5939/593A (bit 7)	Front passenger belt tension sensor fault	• Belt tension sensor circuit; open circuit or short circuit to battery	For belt tension sensor circuit tests, GO to Pinpoint Test G.
B2909 Flash code 16 PID $5939/593A (bit 5)	Front passenger belt tension sensor fault	• Belt tension sensor circuit; short circuit to ground	For belt tension sensor circuit tests, GO to Pinpoint Test G.

Pinpoint tests

PINPOINT TEST A : B2292 (FLASH CODE 33): DRIVER SAFETY BELT PRETENSIONER CIRCUIT FAULT

WARNING: **DO NOT** attempt to measure the resistance across the pretensioner. Failure to follow this instruction may result in personal injury.

TEST CONDITIONS	DETAILS/RESULTS/ACTIONS
A1: CHECK THE SAFETY BELT PRETENSIONER CIRCUIT WITH A SIMULATOR IN PLACE	
WARNING: To avoid accidental deployment and possible personal injury, the backup power supply must be depleted before repairing or replacing any air bag SRS components. To deplete the backup power supply energy, disconnect the battery ground cable and wait for one minute. Failure to follow this instruction may result in personal injury.	
	1 Disconnect the battery negative terminal.
	2 Wait one minute for the backup power supply to deplete.
	3 Disconnect the driver safety belt pretensioner connector, CA65.
	4 Connect the simulator in place of the pretensioner.
	5 Reconnect the battery negative terminal.
	6 Clear the DTC.
	7 Turn the ignition switch to the **ON** position.
	8 Recheck the DTCs and flash codes.

	Are there any DTCs and/or flash codes set with the simulator(s) in place? **Yes** GO to A2. **No** INSTALL a new pretensioner. REFER to: Safety Belt Buckle and Pretensioner (501-20A Safety Belt System, Removal and Installation). CLEAR the DTC, test the system for normal operation.

A2: CHECK THE PRETENSIONER SUPPLY CIRCUIT FOR HIGH RESISTANCE

WARNING: To avoid accidental deployment and possible personal injury, the backup power supply must be depleted before repairing or replacing any air bag SRS components. To deplete the backup power supply energy, disconnect the battery ground cable and wait for one minute. Failure to follow this instruction may result in personal injury.

	1 Turn the ignition switch to the **OFF** position.
	2 Disconnect the battery negative terminal.
	3 Wait one minute for the backup power supply to deplete.
	4 Disconnect the simulator.
	5 Disconnect the RCM connector, For vehicles with 2.0L engine; • CA165. For vehicles with 2.5/3.0L engine; • CA450.
	6 Measure the resistance between the RCM connector, pin 31 (WR) and CA65, pin 07 (WR)
	Is the resistance greater than 5 ohms? **Yes** REPAIR the high resistance circuit. For additional information, refer to the wiring diagrams. CLEAR the DTC, test the system for normal operation. **No** GO to A3.

A3: CHECK THE PRETENSIONER GROUND CIRCUIT FOR HIGH RESISTANCE

	1 Measure the resistance between the RCM connector, pin 32 (NW) and CA65, pin 08 (NW).
	Is the resistance greater than 5 ohms? **Yes** REPAIR the high resistance circuit. For additional information, refer to the wiring diagrams. CLEAR the DTC, test the system for normal operation. **No** GO to A4.

A4: CHECK THE PRETENSIONER SUPPLY CIRCUIT FOR SHORT CIRCUIT TO BATTERY

	1 Measure the resistance between CA65, pin 07 (WR) and the battery positive terminal.
	Is the resistance less than 10,000 ohms? **Yes** REPAIR the short circuit. For additional information, refer to the wiring diagrams. Clear the DTC, test the system for normal operation. **No** GO to A5.

A5: CHECK THE PRETENSIONER GROUND CIRCUIT FOR SHORT CIRCUIT TO BATTERY

	1 Measure the resistance between CA65, pin 08 (NW) and the battery positive terminal.
	Is the resistance less than 10,000 ohms? **Yes** REPAIR the short circuit. For additional information, refer to the wiring diagrams. Clear the DTC, test the system for normal operation. **No** GO to A6.

A6: CHECK THE PRETENSIONER SUPPLY CIRCUIT FOR SHORT CIRCUIT TO GROUND

	1 Measure the resistance between CA65, pin 07 (WR) and GROUND.
	Is the resistance less than 10,000 ohms? **Yes** REPAIR the short circuit. For additional information, refer to the wiring diagrams. Clear the DTC, test the system for normal operation. **No** GO to A7.

A7: CHECK THE PRETENSIONER GROUND CIRCUIT FOR SHORT CIRCUIT TO GROUND

	1 Measure the resistance between CA65, pin 08 (NW) and GROUND.
	Is the resistance less than 10,000 ohms? **Yes** REPAIR the short circuit. For additional information, refer to the wiring diagrams. Clear the DTC, test the system for normal operation. **No** Please check part is not on any form of prior authorisation before replacement.

PINPOINT TEST B : B2292 (FLASH CODE 34): PASSENGER SAFETY BELT PRETENSIONER CIRCUIT FAULT

WARNING: **DO NOT** attempt to measure the resistance across the pretensioner. Failure to follow this instruction may result in personal injury.

TEST CONDITIONS	DETAILS/RESULTS/ACTIONS

B1: CHECK THE SAFETY BELT PRETENSIONER CIRCUIT WITH A SIMULATOR IN PLACE

WARNING: To avoid accidental deployment and possible personal injury, the backup power supply must be depleted before repairing or replacing any air bag SRS components. To deplete the backup power supply energy, disconnect the battery ground cable and wait for one minute. Failure to follow this instruction may result in personal injury.

	1 Disconnect the battery negative terminal.
	2 Wait one minute for the backup power supply to deplete.
	3 Disconnect the passenger safety belt pretensioner connector, CA70

	4 Connect the simulator in place of the pretensioner.
	5 Reconnect the battery negative terminal.
	6 Clear the DTC.
	7 Turn the ignition switch to the **ON** position.
	8 Recheck the DTCs and flash codes.
	Are there any DTCs and/or flash codes set with the simulator(s) in place? **Yes** GO to B2. **No** INSTALL a new pretensioner. REFER to: Safety Belt Buckle and Pretensioner (501-20A Safety Belt System, Removal and Installation). CLEAR the DTC, test the system for normal operation.
B2: CHECK THE PRETENSIONER SUPPLY CIRCUIT FOR HIGH RESISTANCE	
WARNING: To avoid accidental deployment and possible personal injury, the backup power supply must be depleted before repairing or replacing any air bag SRS components. To deplete the backup power supply energy, disconnect the battery ground cable and wait for one minute. Failure to follow this instruction may result in personal injury.	
	1 Turn the ignition switch to the **OFF** position.
	2 Disconnect the battery negative terminal.
	3 Wait one minute for the backup power supply to deplete.
	4 Disconnect the simulator.
	5 Disconnect the RCM connector, For vehicles with 2.0L engine; ● CA165. For vehicles with 2.5/3.0L engine; ● CA450.
	6 Measure the resistance between the RCM connector, pin 33 (GO) and CA70, pin 07 (GO)
	Is the resistance greater than 5 ohms? **Yes** REPAIR the high resistance circuit. For additional information, refer to the wiring diagrams. CLEAR the DTC, test the system for normal operation. **No** GO to B3.
B3: CHECK THE PRETENSIONER GROUND CIRCUIT FOR HIGH RESISTANCE	
	1 Measure the resistance between the RCM connector, pin 34 (BR) and CA70, pin 08 (BR).
	Is the resistance greater than 5 ohms? **Yes** REPAIR the high resistance circuit. For additional information, refer to the wiring diagrams. Clear the DTC, test the system for normal operation. **No** GO to B4.
B4: CHECK THE PRETENSIONER SUPPLY CIRCUIT FOR SHORT CIRCUIT TO BATTERY	
	1 Measure the resistance between CA70, pin 07 (GO) and the battery positive terminal.
	Is the resistance less than 10,000 ohms? **Yes** REPAIR the short circuit. For additional information, refer to the wiring diagrams. Clear the DTC, test the system for normal operation. **No** GO to B5.
B5: CHECK THE PRETENSIONER GROUND CIRCUIT FOR SHORT CIRCUIT TO BATTERY	
	1 Measure the resistance between CA70, pin 08 (BR) and the battery positive terminal.
	Is the resistance less than 10,000 ohms? **Yes** REPAIR the short circuit. For additional information, refer to the wiring diagrams. Clear the DTC, test the system for normal operation. **No** GO to B6.
B6: CHECK THE PRETENSIONER SUPPLY CIRCUIT FOR SHORT CIRCUIT TO GROUND	
	1 Measure the resistance between CA70, pin 07 (GO) and GROUND.
	Is the resistance less than 10,000 ohms? **Yes** REPAIR the short circuit. For additional information, refer to the wiring diagrams. Clear the DTC, test the system for normal operation. **No** GO to B7.
B7: CHECK THE PRETENSIONER GROUND CIRCUIT FOR SHORT CIRCUIT TO GROUND	
	1 Measure the resistance between CA70, pin 08 (BR) and GROUND.
	Is the resistance less than 10,000 ohms? **Yes** REPAIR the short circuit. For additional information, refer to the wiring diagrams. Clear the DTC, test the system for normal operation. **No** Please check part is not on any form of prior authorisation before replacement.

PINPOINT TEST C : B2434, B2435, B2691 (FLASH CODE 51): DRIVER SAFETY BELT SWITCH CIRCUIT FAULT

TEST CONDITIONS	DETAILS/RESULTS/ACTIONS
C1: CHECK THE DRIVER SAFETY BELT SWITCH SUPPLY CIRCUIT FOR HIGH RESISTANCE	
WARNING: To avoid accidental deployment and possible personal injury, the backup power supply must be depleted before repairing or replacing any air bag SRS components. To deplete the backup power supply energy, disconnect the battery ground cable and wait for one minute. Failure to follow this instruction may result in personal injury.	
	1 Disconnect the battery negative terminal.

	2 Wait one minute for the backup power supply to deplete.
	3 Disconnect the RCM connector, For vehicles with 2.0L engine; ● CA165. For vehicles with 2.5/3.0L engine; ● CA450.
	4 Disconnect the driver safety belt switch connector, CA65.
	5 Measure the resistance between CA65, pin 14 (O) and the RCM connector, pin 25 (O).
	Is the resistance greater than 5 ohms? **Yes** REPAIR the high resistance circuit. For additional information, refer to the wiring diagrams. Clear the DTC, test the system for normal operation. **No** GO to C2.
C2: CHECK THE DRIVER SAFETY BELT SWITCH SUPPLY CIRCUIT FOR SHORT CIRCUIT TO BATTERY	
	1 Measure the resistance between CA65, pin 14 (O) and the battery positive terminal.
	Is the resistance less than 10,000 ohms? **Yes** REPAIR the short circuit. For additional information, refer to the wiring diagrams. Clear the DTC, test the system for normal operation. **No** GO to C3.
C3: CHECK THE DRIVER SAFETY BELT SWITCH SUPPLY CIRCUIT FOR SHORT CIRCUIT TO GROUND	
	1 Measure the resistance between CA65, pin 14 (O) and GROUND.
	Is the resistance less than 10,000 ohms? **Yes** REPAIR the short circuit. For additional information, refer to the wiring diagrams. Clear the DTC, test the system for normal operation. **No** GO to C4.
C4: CHECK THE DRIVER SAFETY BELT SWITCH GROUND CIRCUIT FOR HIGH RESISTANCE	
	1 Measure the resistance between CA65, pin 13 (B) and GROUND.
	Is the resistance greater than 5 ohms? **Yes** REPAIR the high resistance circuit. For additional information, refer to the wiring diagrams. Clear the DTC, test the system for normal operation. **No** GO to C5.
C5: CHECK THE DRIVER SAFETY BELT SWITCH GROUND CIRCUIT FOR SHORT CIRCUIT TO BATTERY	
	1 Measure the resistance between CA65, pin 13 (B) and the battery positive terminal.
	Is the resistance less than 10,000 ohms? **Yes** REPAIR the short circuit. For additional information, refer to the wiring diagrams. Clear the DTC, test the system for normal operation. **No** INSTALL a new driver safety belt switch, REFER to: Safety Belt Buckle and Pretensioner (501-20A Safety Belt System, Removal and Installation). Clear the DTC, test the system for normal operation. If the DTC is repeated, install a new RCM, REFER to: Restraints Control Module (RCM) (501-20B Supplemental Restraint System, Removal and Installation).

PINPOINT TEST D : B2438, B2439, B2692 (FLASH CODE 52): PASSENGER SAFETY BELT SWITCH CIRCUIT FAULT	
TEST CONDITIONS	**DETAILS/RESULTS/ACTIONS**
D1: CHECK THE PASSENGER SAFETY BELT SWITCH SUPPLY CIRCUIT FOR HIGH RESISTANCE	
WARNING: To avoid accidental deployment and possible personal injury, the backup power supply must be depleted before repairing or replacing any air bag SRS components. To deplete the backup power supply energy, disconnect the battery ground cable and wait for one minute. Failure to follow this instruction may result in personal injury.	
	1 Disconnect the battery negative terminal.
	2 Wait one minute for the backup power supply to deplete.
	3 Disconnect the RCM connector, For vehicles with 2.0L engine; ● CA165. For vehicles with 2.5/3.0L engine; ● CA450.
	4 Disconnect the passenger safety belt switch connector, CA70.
	5 Measure the resistance between CA70, pin 14 (R) and the RCM connector, pin 26 (R).
	Is the resistance greater than 5 ohms? **Yes** REPAIR the high resistance circuit. For additional information, refer to the wiring diagrams. Clear the DTC, test the system for normal operation. **No** GO to D2.
D2: CHECK THE PASSENGER SAFETY BELT SWITCH SUPPLY CIRCUIT FOR SHORT CIRCUIT TO BATTERY	
	1 Measure the resistance between CA70, pin 14 (R) and the battery positive terminal.

	Is the resistance less than 10,000 ohms? **Yes** REPAIR the short circuit. For additional information, refer to the wiring diagrams. Clear the DTC, test the system for normal operation. **No** GO to D3.
D3: CHECK THE PASSENGER SAFETY BELT SWITCH SUPPLY CIRCUIT FOR SHORT CIRCUIT TO GROUND	
	1 Measure the resistance between CA70, pin 14 (r) and GROUND.
	Is the resistance less than 10,000 ohms? **Yes** REPAIR the short circuit. For additional information, refer to the wiring diagrams. Clear the DTC, test the system for normal operation. **No** GO to D4.
D4: CHECK THE PASSENGER SAFETY BELT SWITCH GROUND CIRCUIT FOR HIGH RESISTANCE	
	1 Measure the resistance between CA70, pin 13 (B) and GROUND.
	Is the resistance greater than 5 ohms? **Yes** REPAIR the high resistance circuit. For additional information, refer to the wiring diagrams. Clear the DTC, test the system for normal operation. **No** GO to D5.
D5: CHECK THE PASSENGER SAFETY BELT SWITCH GROUND CIRCUIT FOR SHORT CIRCUIT TO BATTERY	
	1 Measure the resistance between CA70, pin 13 (B) and the battery positive terminal.
	Is the resistance less than 10,000 ohms? **Yes** REPAIR the short circuit. For additional information, refer to the wiring diagrams. Clear the DTC, test the system for normal operation. **No** INSTALL a new passenger safety belt switch, REFER to: Safety Belt Buckle and Pretensioner (501-20A Safety Belt System, Removal and Installation). Clear the DTC, test the system for normal operation. If the DTC is repeated, install a new RCM, REFER to: Restraints Control Module (RCM) (501-20B Supplemental Restraint System, Removal and Installation).

PINPOINT TEST E : B2292 (FLASH CODE 38) DRIVER SIDE RETRACTOR PRETENSIONER CIRCUIT FAULT

WARNING: **DO NOT** attempt to measure the resistance across the pretensioner. Failure to follow this instruction may result in personal injury.

TEST CONDITIONS	DETAILS/RESULTS/ACTIONS
E1: CHECK THE RETRACTOR PRETENSIONER CIRCUIT WITH A SIMULATOR IN PLACE	
WARNING: To avoid accidental deployment and possible personal injury, the backup power supply must be depleted before repairing or replacing any air bag SRS components. To deplete the backup power supply energy, disconnect the battery ground cable and wait for one minute. Failure to follow this instruction may result in personal injury.	
	1 Disconnect the battery negative terminal.
	2 Wait one minute for the backup power supply to deplete.
	3 Disconnect the retractor pretensioner connector, CA421.
	4 Connect the simulator in place of the pretensioner.
	5 Reconnect the battery negative terminal.
	6 Clear the DTC.
	7 Turn the ignition switch to the **ON** position.
	8 Recheck the DTCs and flash codes.
	Are there any DTCs and/or flash codes set with the simulator in place? **Yes** GO to E2. **No** INSTALL a new pretensioner, REFER to: Front Safety Belt Retractor (501-20A Safety Belt System, Removal and Installation). CLEAR the DTC, test the system for normal operation.
E2: CHECK THE RETRACTOR PRETENSIONER SUPPLY CIRCUIT FOR HIGH RESISTANCE	
WARNING: To avoid accidental deployment and possible personal injury, the backup power supply must be depleted before repairing or replacing any air bag SRS components. To deplete the backup power supply energy, disconnect the battery ground cable and wait for one minute. Failure to follow this instruction may result in personal injury.	
	1 Disconnect the battery negative terminal.
	2 Wait one minute for the backup power supply to deplete.
	3 Disconnect the simulator.
	4 Disconnect the RCM connector, For vehicles with 2.0L engine; ● CA165. For vehicles with 2.5/3.0L engine; ● CA450.
	5 Measure the resistance between CA421, pin 01 (WR) and the RCM connector, pin 35 (WR).
	Is the resistance greater than 5 ohms? **Yes** REPAIR the high resistance circuit. For additional information, refer to the wiring diagrams. Clear the DTC, test the system for normal operation. **No** GO to E3.
E3: CHECK THE RETRACTOR PRETENSIONER GROUND CIRCUIT FOR HIGH RESISTANCE	
	1 Measure the resistance between CA421, pin 03 (NW) and the RCM connector, pin 36 (NW).

	Is the resistance greater than 5 ohms? **Yes** REPAIR the high resistance circuit. For additional information, refer to the wiring diagrams. Clear the DTC, test the system for normal operation. **No** GO to E4.
E4: CHECK THE RETRACTOR PRETENSIONER SUPPLY CIRCUIT FOR SHORT CIRCUIT TO BATTERY	
	1 Measure the resistance between CA421, pin 01 (WR) and the battery positive terminal.
	Is the resistance less than 10,000 ohms? **Yes** REPAIR the short circuit. For additional information, refer to the wiring diagrams. Clear the DTC, test the system for normal operation. **No** GO to E5.
E5: CHECK THE RETRACTOR PRETENSIONER GROUND CIRCUIT FOR SHORT CIRCUIT TO BATTERY	
	1 Measure the resistance between CA421, pin 03 (NW) and the battery positive terminal.
	Is the resistance less than 10,000 ohms? **Yes** REPAIR the short circuit. For additional information, refer to the wiring diagrams. Clear the DTC, test the system for normal operation. **No** GO to E6.
E6: CHECK THE RETRACTOR PRETENSIONER SUPPLY CIRCUIT FOR SHORT CIRCUIT TO GROUND	
	1 Measure the resistance between CA421, pin 01 (WR) and GROUND.
	Is the resistance less than 10,000 ohms? **Yes** REPAIR the short circuit. For additional information, refer to the wiring diagrams. Clear the DTC, test the system for normal operation. **No** GO to E7.
E7: CHECK THE RETRACTOR PRETENSIONER GROUND CIRCUIT FOR SHORT CIRCUIT TO GROUND	
	1 Measure the resistance between CA421, pin 03 (NW) and GROUND.
	Is the resistance less than 10,000 ohms? **Yes** REPAIR the short circuit. For additional information, refer to the wiring diagrams. Clear the DTC, test the system for normal operation. **No** Please check part is not on any form of prior authorisation before replacement.

PINPOINT TEST F : B2292 (FLASH CODE 39) PASSENGER SIDE RETRACTOR PRETENSIONER CIRCUIT FAULT

WARNING: **DO NOT** attempt to measure the resistance across the pretensioner. Failure to follow this instruction may result in personal injury.

TEST CONDITIONS	DETAILS/RESULTS/ACTIONS
F1: CHECK THE RETRACTOR PRETENSIONER CIRCUIT WITH A SIMULATOR IN PLACE	
WARNING: To avoid accidental deployment and possible personal injury, the backup power supply must be depleted before repairing or replacing any air bag SRS components. To deplete the backup power supply energy, disconnect the battery ground cable and wait for one minute. Failure to follow this instruction may result in personal injury.	
	1 Disconnect the battery negative terminal.
	2 Wait one minute for the backup power supply to deplete.
	3 Disconnect the retractor pretensioner connector, CA422.
	4 Connect the simulator in place of the pretensioner.
	5 Reconnect the battery negative terminal.
	6 Clear the DTC.
	7 Turn the ignition switch to the **ON** position.
	8 Recheck the DTCs and flash codes.
	Are there any DTCs and/or flash codes set with the simulator in place? **Yes** GO to F2. **No** INSTALL a new pretensioner. REFER to: Front Safety Belt Retractor (501-20A Safety Belt System, Removal and Installation). CLEAR the DTC, test the system for normal operation.
F2: CHECK THE RETRACTOR PRETENSIONER SUPPLY CIRCUIT FOR HIGH RESISTANCE	
WARNING: To avoid accidental deployment and possible personal injury, the backup power supply must be depleted before repairing or replacing any air bag SRS components. To deplete the backup power supply energy, disconnect the battery ground cable and wait for one minute. Failure to follow this instruction may result in personal injury.	
	1 Disconnect the battery negative terminal.
	2 Wait one minute for the backup power supply to deplete.
	3 Disconnect the simulator.
	4 Disconnect the RCM connector, For vehicles with 2.0L engine; ● CA165. For vehicles with 2.5/3.0L engine; ● CA450.
	5 Measure the resistance between CA422, pin 01 (GO) and the RCM connector, pin 37 (GO).
	Is the resistance greater than 5 ohms? **Yes** REPAIR the high resistance circuit. For additional information, refer to the wiring diagrams. Clear the DTC, test the system for normal operation.

	No GO to F3.
F3: CHECK THE RETRACTOR PRETENSIONER GROUND CIRCUIT FOR HIGH RESISTANCE	
	1 Measure the resistance between CA422, pin 03 (BR) and the RCM connector, pin 38 (BR).
	Is the resistance greater than 5 ohms? **Yes** REPAIR the high resistance circuit. For additional information, refer to the wiring diagrams. Clear the DTC, test the system for normal operation. **No** GO to F4.
F4: CHECK THE RETRACTOR PRETENSIONER SUPPLY CIRCUIT FOR SHORT CIRCUIT TO BATTERY	
	1 Measure the resistance between CA422, pin 01 (GO) and the battery positive terminal.
	Is the resistance less than 10,000 ohms? **Yes** REPAIR the short circuit. For additional information, refer to the wiring diagrams. Clear the DTC, test the system for normal operation. **No** GO to F5.
F5: CHECK THE RETRACTOR PRETENSIONER GROUND CIRCUIT FOR SHORT CIRCUIT TO BATTERY	
	1 Measure the resistance between CA422, pin 03 (BR) and the battery positive terminal.
	Is the resistance less than 10,000 ohms? **Yes** REPAIR the short circuit. For additional information, refer to the wiring diagrams. Clear the DTC, test the system for normal operation. **No** GO to F6.
F6: CHECK THE RETRACTOR PRETENSIONER SUPPLY CIRCUIT FOR SHORT CIRCUIT TO GROUND	
	1 Measure the resistance between CA422, pin 01 (GO) and GROUND.
	Is the resistance less than 10,000 ohms? **Yes** REPAIR the short circuit. For additional information, refer to the wiring diagrams. Clear the DTC, test the system for normal operation. **No** GO to F7.
F7: CHECK THE RETRACTOR PRETENSIONER GROUND CIRCUIT FOR SHORT CIRCUIT TO GROUND	
	1 Measure the resistance between CA422, pin 03 (BR) and GROUND.
	Is the resistance less than 10,000 ohms? **Yes** REPAIR the short circuit. For additional information, refer to the wiring diagrams. Clear the DTC, test the system for normal operation. **No** Please check part is not on any form of prior authorisation before replacement.

PINPOINT TEST G : C2909 (FLASH CODE 16): BELT TENSION SENSOR FAULT	
TEST CONDITIONS	**DETAILS/RESULTS/ACTIONS**
G1: CHECK THE BELT TENSION SENSOR SIGNAL CIRCUIT FOR HIGH RESISTANCE	
	1 Disconnect the belt tension sensor connector, WS19.
	2 Disconnect the occupant classification sensor connector, WS17.
	3 Measure the resistance between WS19, pin 02 (Y) and WS17, pin A (Y).
	Is the resistance greater than 5 ohms? **Yes** REPAIR the high resistance circuit. For additional information, refer to the wiring diagrams. Clear the DTC, test the system for normal operation. **No** GO to G2.
G2: CHECK THE BELT TENSION SENSOR VCC CIRCUIT FOR HIGH RESISTANCE	
	1 Measure the resistance between WS19, pin 01 (O) and WS17, pin B (O).
	Is the resistance greater than 5 ohms? **Yes** REPAIR the high resistance circuit. For additional information, refer to the wiring diagrams. Clear the DTC, test the system for normal operation. **No** GO to G3.
G3: CHECK THE BELT TENSION SENSOR GROUND CIRCUIT FOR HIGH RESISTANCE	
	1 Measure the resistance between WS19, pin 03 (G) and WS17, pin C (G).
	Is the resistance greater than 5 ohms? **Yes** REPAIR the high resistance circuit. For additional information, refer to the wiring diagrams. Clear the DTC, test the system for normal operation. **No** GO to G4.
G4: CHECK THE BELT TENSION SENSOR SIGNAL CIRCUIT FOR SHORT CIRCUIT TO BATTERY	
	1 Measure the resistance between WS19, pin 02 (Y) and the battery positive terminal.
	Is the resistance less than 10,000 ohms? **Yes** REPAIR the short circuit. For additional information, refer to the wiring diagrams. Clear the DTC, test the system for normal operation. **No** GO to G5.
G5: CHECK THE BELT TENSION SENSOR VCC CIRCUIT FOR SHORT CIRCUIT TO BATTERY	
	1 Measure the resistance between WS19, pin 01 (O) and the battery positive terminal.
	Is the resistance less than 10,000 ohms? **Yes** REPAIR the short circuit. For additional information, refer to the wiring diagrams. Clear the DTC, test the system for normal operation. **No**

	GO to G6.
G6: CHECK THE BELT TENSION SENSOR GROUND CIRCUIT FOR SHORT CIRCUIT TO BATTERY	
	1 Measure the resistance between WS19, pin 03 (G) and the battery positive terminal.
	Is the resistance less than 10,000 ohms? **Yes** REPAIR the short circuit. For additional information, refer to the wiring diagrams. Clear the DTC, test the system for normal operation. **No** GO to G7.
G7: CHECK THE BELT TENSION SENSOR SIGNAL CIRCUIT FOR SHORT CIRCUIT TO GROUND	
	1 Measure the resistance between WS19, pin 02 (Y) and GROUND.
	Is the resistance less than 10,000 ohms? **Yes** REPAIR the short circuit. For additional information, refer to the wiring diagrams. Clear the DTC, test the system for normal operation. **No** GO to G8.
G8: CHECK THE BELT TENSION SENSOR VCC CIRCUIT FOR SHORT CIRCUIT TO GROUND	
	1 Measure the resistance between WS19, pin 01 (O) and GROUND.
	Is the resistance less than 10,000 ohms? **Yes** REPAIR the short circuit. For additional information, refer to the wiring diagrams. Clear the DTC, test the system for normal operation. **No** GO to G9.
G9: CHECK THE BELT TENSION SENSOR GROUND CIRCUIT FOR SHORT CIRCUIT TO GROUND	
	1 Measure the resistance between WS19, pin 03 (G) and the battery positive terminal.
	Is the resistance less than 10,000 ohms? **Yes** REPAIR the short circuit. For additional information, refer to the wiring diagrams. Clear the DTC, test the system for normal operation. **No** Please check part is not on any form of prior authorisation before replacement.

Safety Belt System - Front Safety Belt Retractor

Removal and Installation

Removal

• NOTE: The front seat belts, which incorporate the seat belt retractors and pretensioners are supplied as an assembly and not serviceable components.

• NOTE: Repair is made by replacement only. If a part is replaced and the new part does not correct the condition, install the original part and carry out the diagnostic procedure again.

1. NOTE: Right-hand shown left-hand similar.

Remove the lower B-pillar trim panel for additional information, refer to Section 501-05 Interior Trim and Ornamentation.

2. Detach the safety belt lower anchor from the underside of the seat.

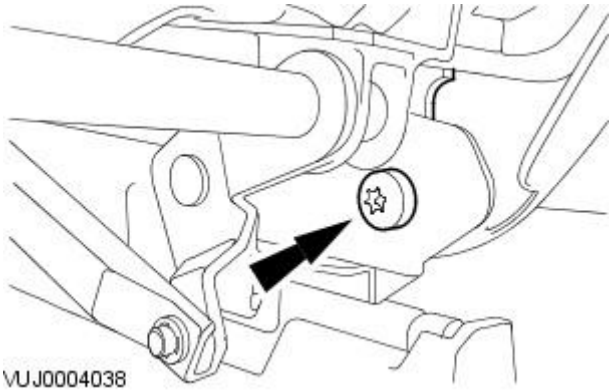

3. Detach the safety belt upper retaining bolt.

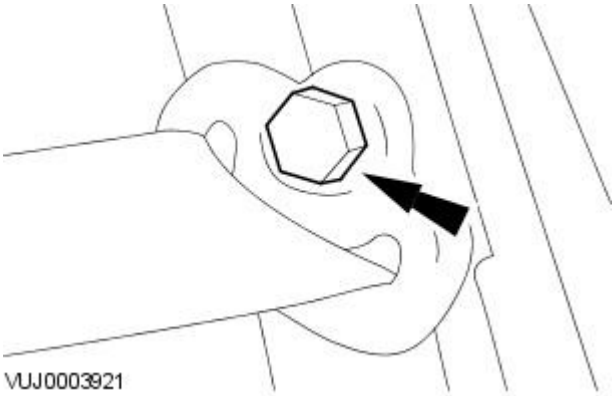

4. Remove the safety belt guide retaining bolt.

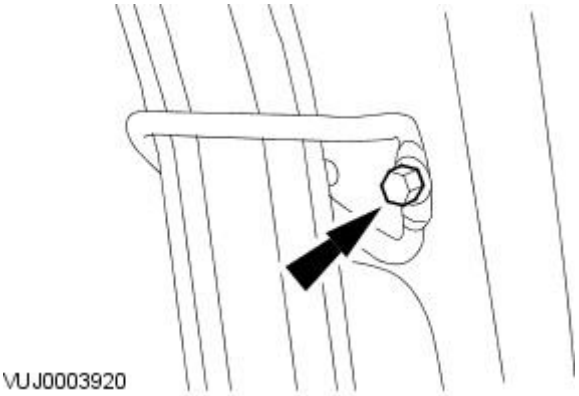

5. Remove the front safety belt retractor assembly.

- Remove the retaining bolt.

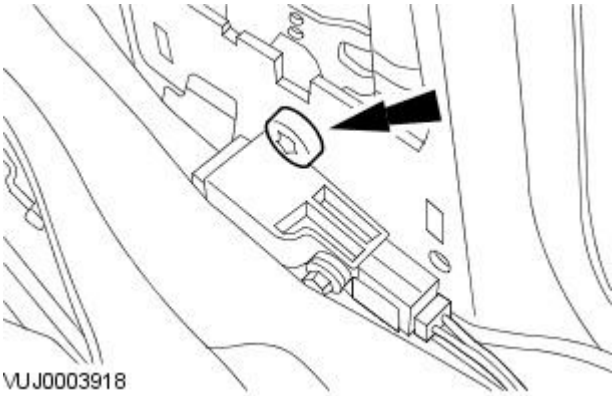

Installation

• NOTE: The front seat belts, which incorporate the seat belt retractors and pretensioners are supplied as an assembly and not serviceable components.

• NOTE: Repair is made by replacement only. If a part is replaced and the new part does not correct the condition, install the original part and carry out the diagnostic procedure again.

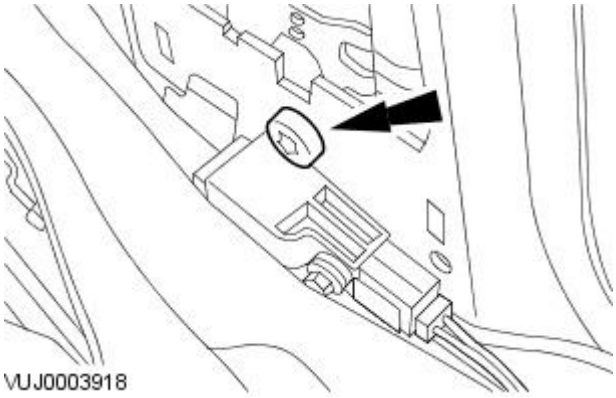

1. To install reverse the removal procedure.

- Tighten to 55 Nm.

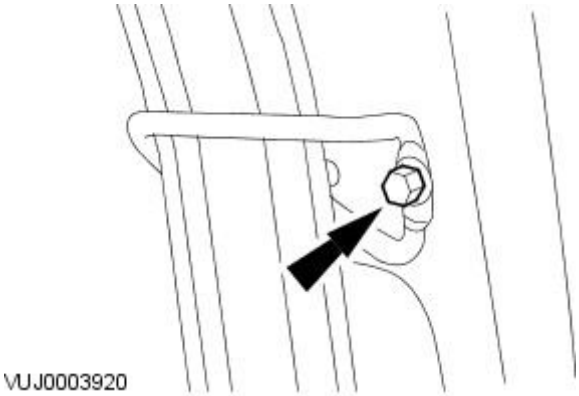

2. Tighten to 5 Nm.

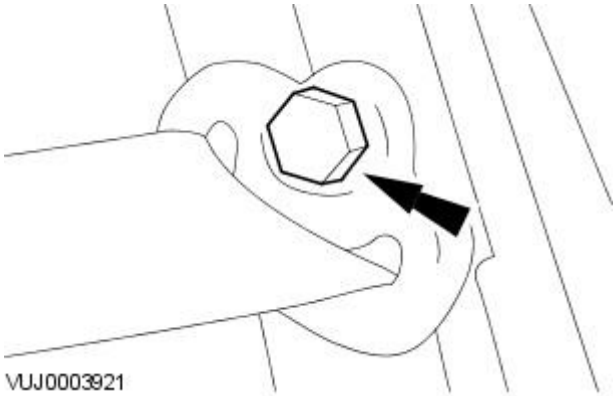

3. Tighten to 25 Nm.

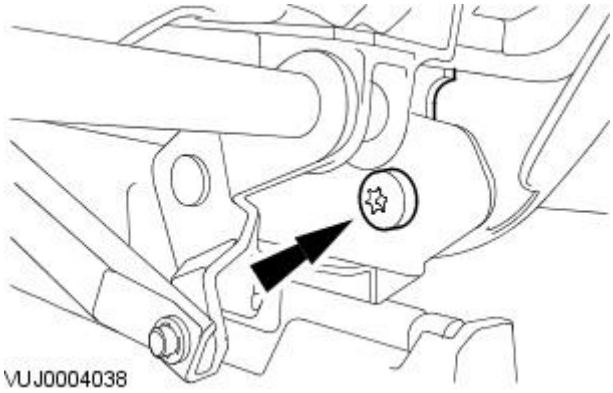

4. Tighten to 55 Nm.

Safety Belt System - Front Safety Belt Shoulder Height Adjuster

Removal and Installation

Removal

1. Remove the upper B-pillar trim panel for additional information, refer to Section 501-05 Interior Trim and Ornamentation.
2. Detach the safety belt upper retaining bolt.

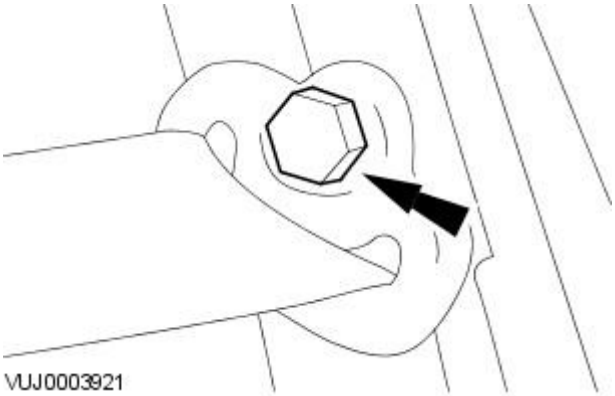

3. Remove the front safety belt shoulder height adjuster retaining bolt.
   - Remove the retaining bolts.

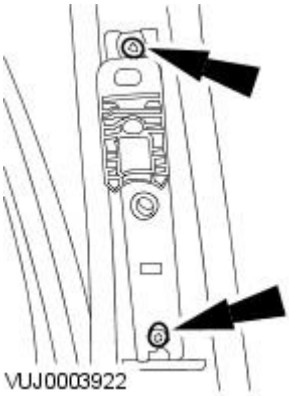

Installation

1. To install reverse the removal procedure.
2. Tighten to 25 Nm.

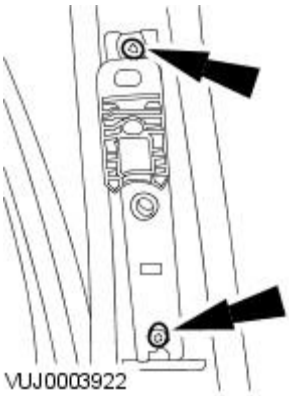

3. Tighten to 25 Nm.

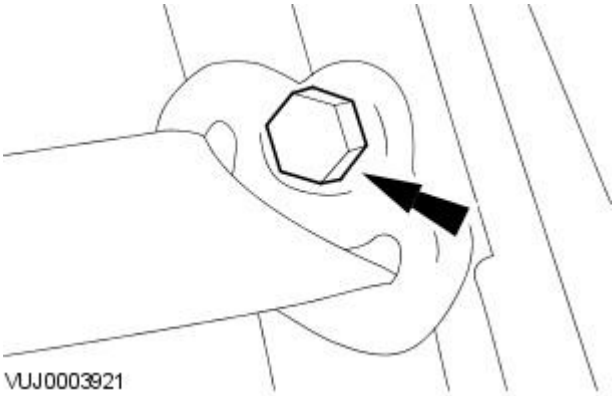

Safety Belt System - Rear Center Safety Belt Retractor4-Door

Removal and Installation

Removal

• NOTE: Repair is made by replacement only. If a part is replaced and the new part does not correct the condition, install the original part and carry out the diagnostic procedure again.

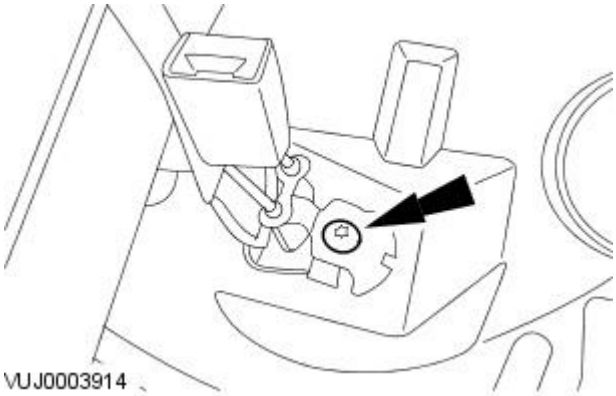

1. Remove the rear seat backrest for additional information, refer to Section 501-10 Seating.
2. Remove the center rear safety belt and buckle.
   - Remove the retaining bolt.

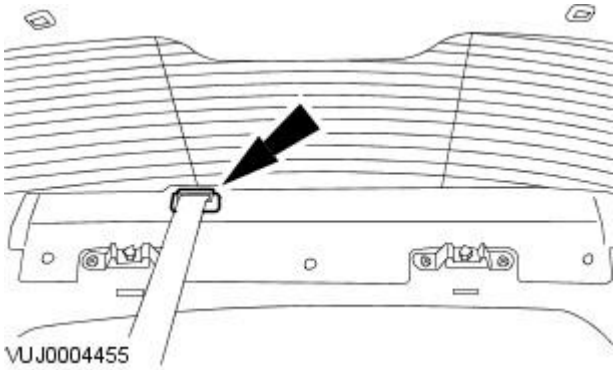

3. Detach and remove the center rear safety belt upper trim cover.

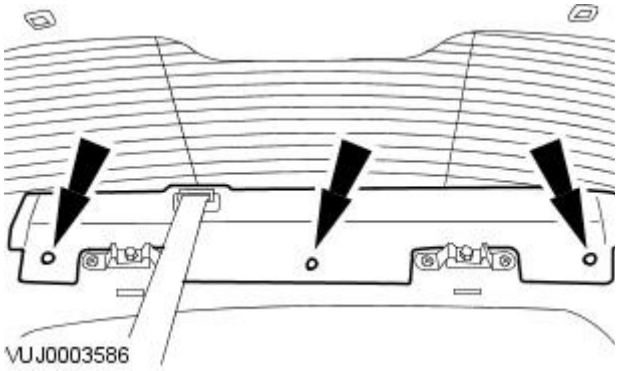

4. Remove the parcel shelf trim panel.

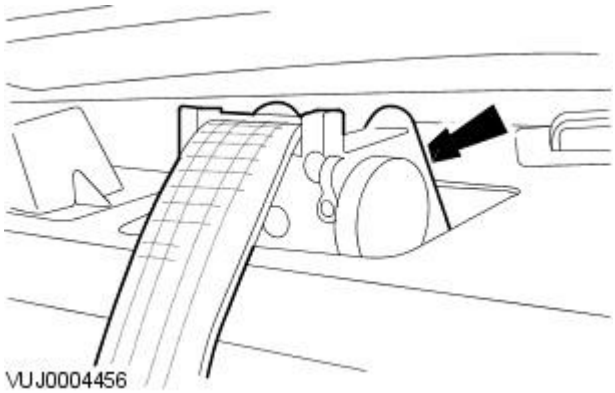

5. Remove the center rear safety belt retractor.
   - Remove the retaining bolt.

Installation

• NOTE: Repair is made by replacement only. If a part is replaced and the new part does not correct the condition, install the original part and carry out the diagnostic procedure again.

1. To install reverse the removal procedure.

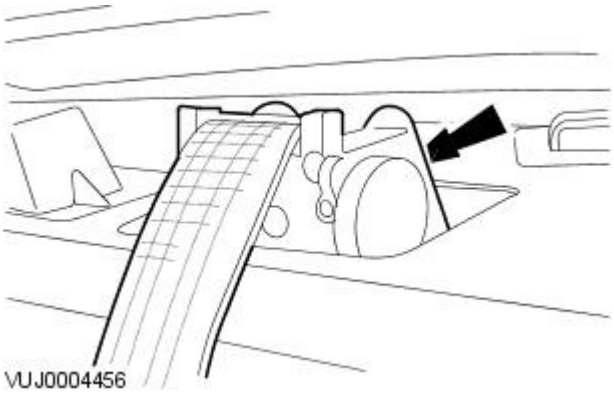

2. Tighten to 55 Nm.

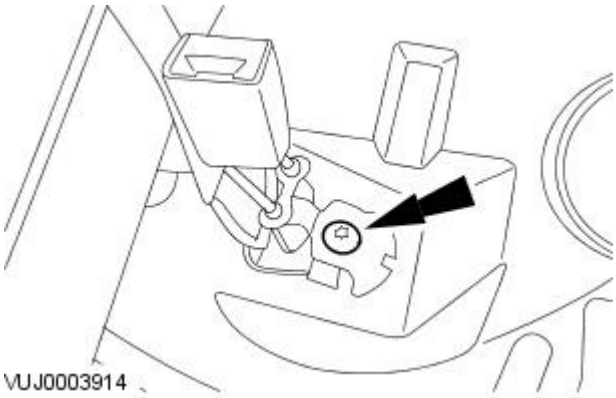

3. NOTE: Make sure the anti rotation pins on the body and safety belt anchor plate are located correctly before tightening the bolt.

Tighten to 55 Nm.

Safety Belt System - Rear Center Safety Belt RetractorWagon

Removal and Installation

Removal

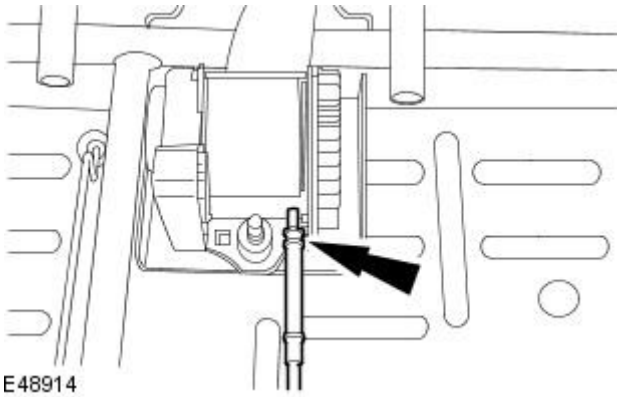

1. Disassemble the rear seat backrest.
   For additional information, refer to: Rear Seat Backrest - Wagon, Vehicles With: 70/30 Split Seat (501-10 Seating, Removal and Installation).
2. Detach the release cable from the rear center safety belt retractor.

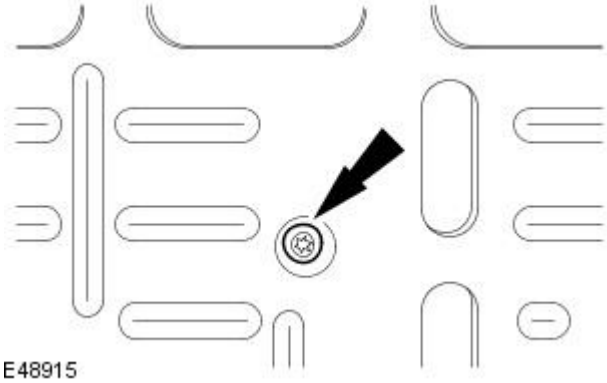

3. Remove the rear center safety belt retractor.

Installation

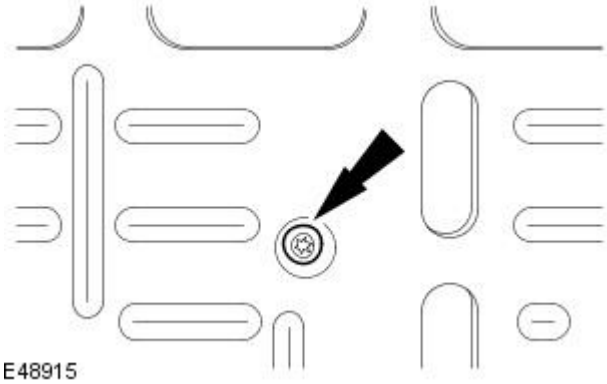

1. To install, reverse the removal procedure.
2. Tighten to 38 Nm.

Safety Belt System - Rear Safety Belt Buckle

Removal and Installation

Removal

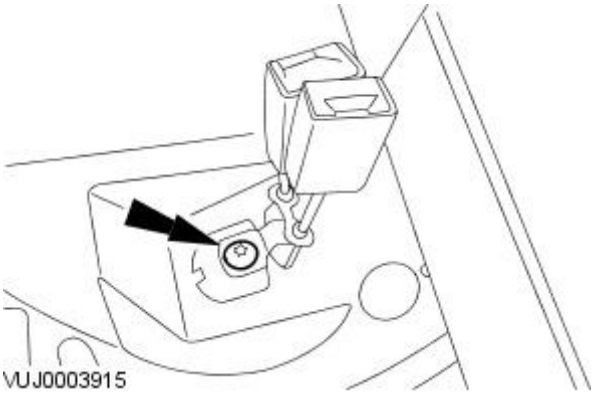

1. Remove the rear seat cushion for additional information, refer to Section 501-10 Seating.
2. Remove the left-hand rear safety belt buckles.
   - Remove the retaining bolt.

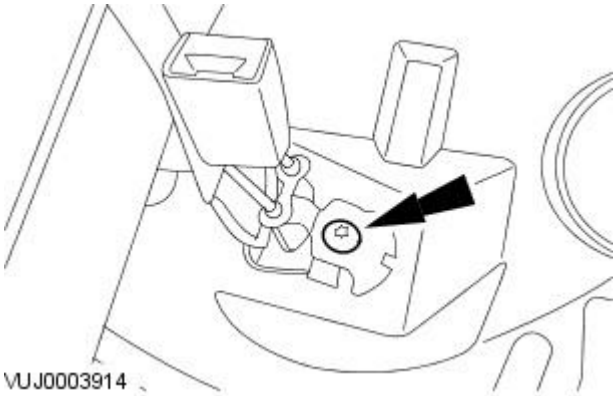

3. Remove the right-hand rear safety belt and buckle.
   - Remove the retaining bolt.

Installation

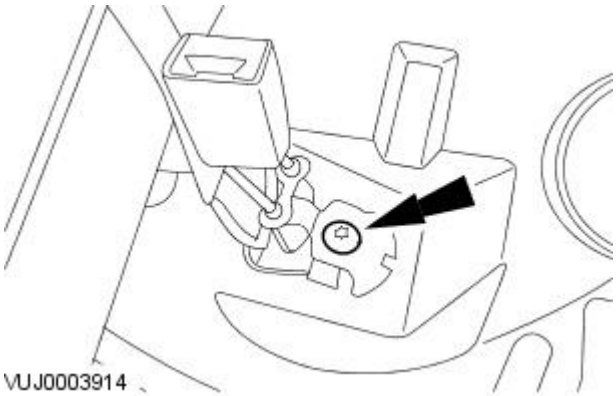

1. To install reverse the removal procedure.

• NOTE: Make sure the anti rotation pins on the body and safety belt anchor plate are located correctly before tightening the bolt.

   - Tighten to 55 Nm.

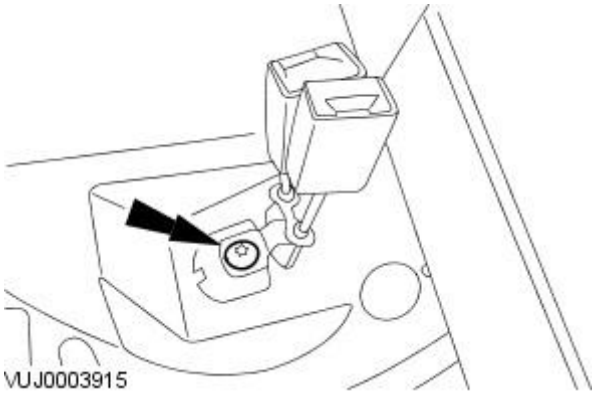

2. NOTE: Make sure the anti rotation pins on the body and safety belt anchor plate are located correctly before tightening the bolt.

   Tighten to 55 Nm.

Safety Belt System - Rear Safety Belt Retractor4-Door

Removal and Installation

Removal

• NOTE: Repair is made by replacement only. If a part is replaced and the new part does not correct the condition, install the original part and carry out the diagnostic procedure again.

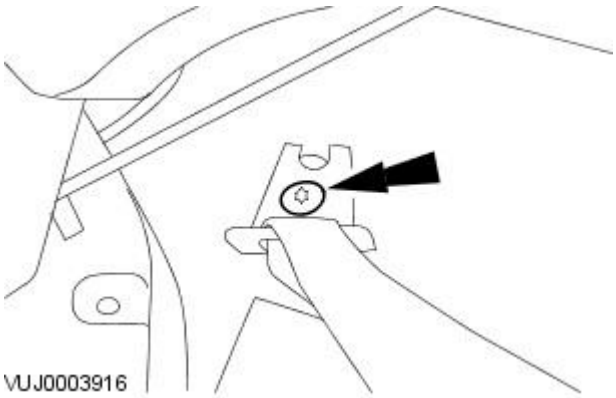

1. Remove the rear seat backrest for additional information, refer to Section 501-10 Seating.
2. NOTE: Left-hand shown right-hand similar.

   Remove the rear safety belt anchor retaining bolt.

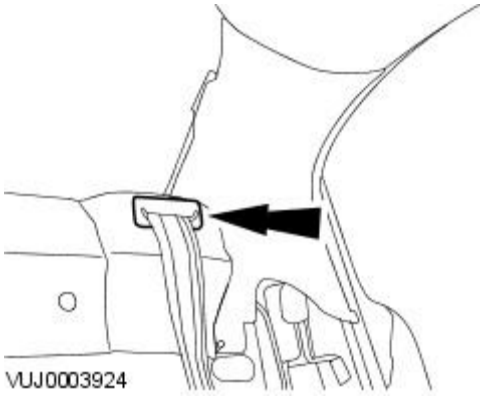

3. Remove and detach the rear safety belt upper trim cover.

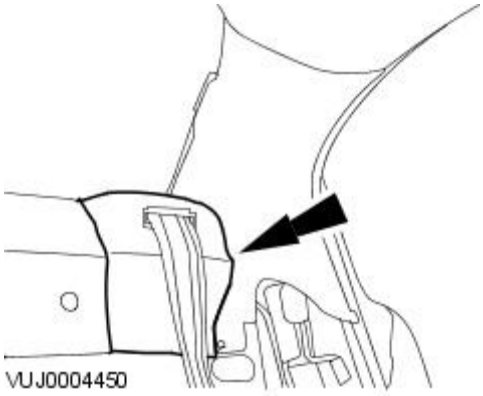

4. Remove the rear safety belt retractor trim panel.

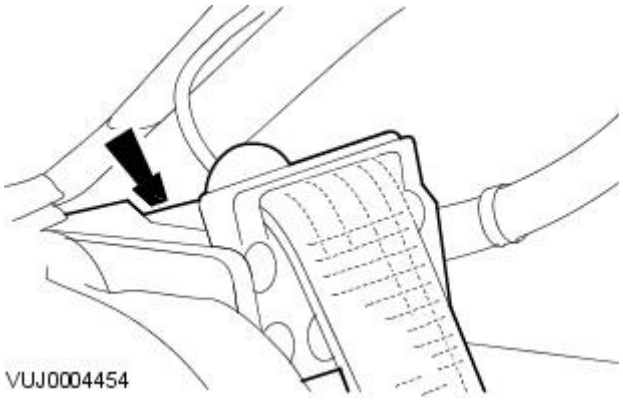

5. Remove the rear safety belt retractor assembly.
   - Remove the retaining bolt.

Installation

• NOTE: Repair is made by replacement only. If a part is replaced and the new part does not correct the condition, install the original part and carry out the diagnostic procedure again.

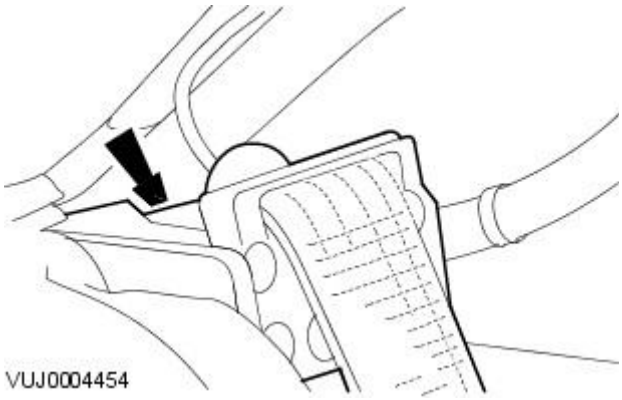

1. To install reverse the removal procedure.

- Tighten to 55 Nm.

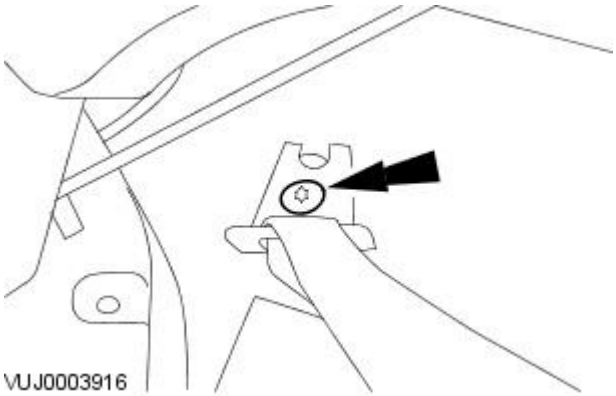

2. Tighten to 55 Nm.

Safety Belt System - Rear Safety Belt RetractorWagon

Removal and Installation

Removal

1. Remove the loadspace trim panel.
   For additional information, refer to: Loadspace Trim Panel (501-05 Interior Trim and Ornamentation, Removal and Installation).
2. Remove the rear seat bolster.
   For additional information, refer to: Rear Seat Bolster - Wagon (501-10 Seating, Removal and Installation).
3. Remove the rear safety belt anchor retaining bolt.

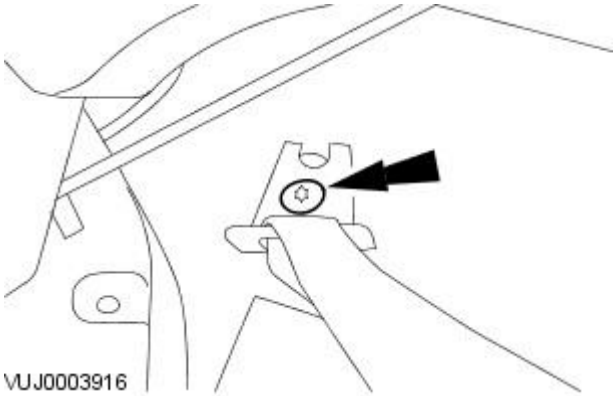

4. Remove the rear safety belt retractor retaining bolt.

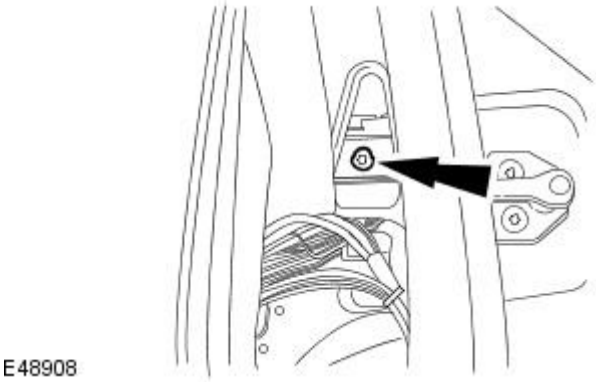

5. Remove the rear safety belt retractor.

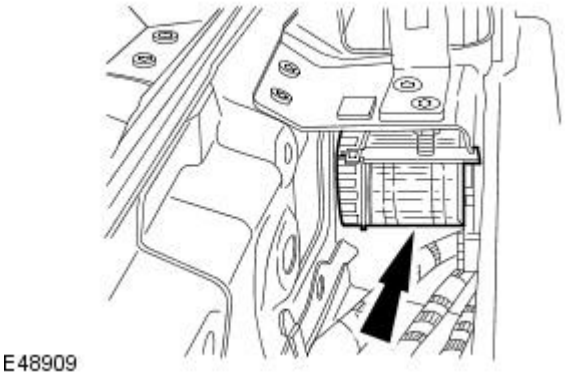

Installation

1. To install reverse the removal procedure.
   - Tighten to 55 Nm

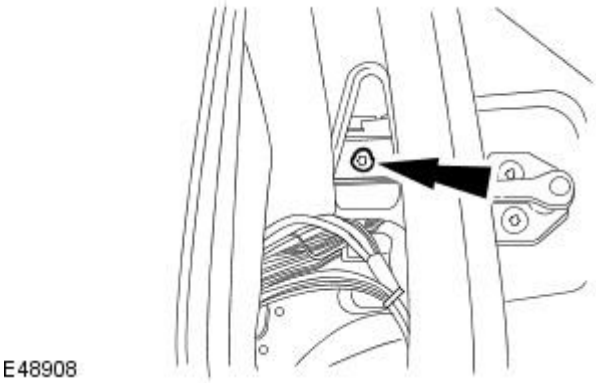

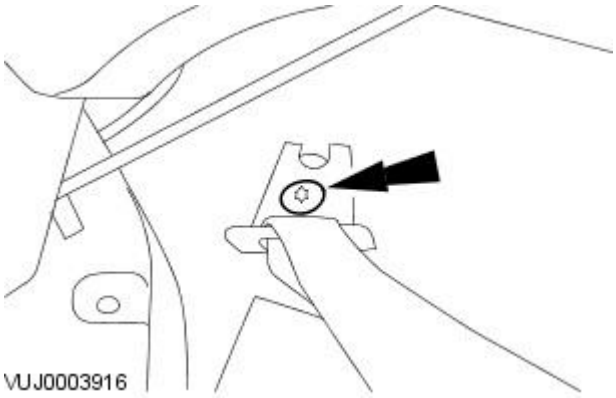

2. Tighten to 55 Nm.

Safety Belt System - Safety Belt Buckle and Pretensioner

Removal and Installation

Removal

• WARNINGS:

To avoid accidental deployment and possible personal injury, the backup power supply must be depleted before repairing or replacing any air bag occupant restraints system (ORS) components. To deplete the backup power supply energy, disconnect the battery ground cable and wait one minute. Failure to follow this instructions may result in personal injury.

Never probe the connectors on the air bag module or pretensioners. Doing so may result in deployment. Failure to follow this instructions may result in personal injury.

All safety belt assemblies including retractors, buckles, front safety belt buckle support assemblies (slider bar), if equipped, child safety seat tether brackets (if equipped) and attaching hardware should be inspected after any collision. New safety belt assemblies should be fitted unless a qualified technician finds the assemblies, show no damage and operate correctly. New safety belt assemblies should also be fitted where safety belt assemblies not in use during a collision, are inspected and damage or incorrect operation is noted. Failure to follow these instructions may result in personal injury.

CAUTION: Electronic modules are sensitive to static electrical charges. If exposed to these charges, damage may result.

• NOTE: Repair is made by replacement only. If a part is replaced and the new part does not correct the condition, install the original part and carry out the diagnostic procedure again.

• NOTE: The front seat belts, which incorporate the seat belt retractors and pretensioners are supplied as an assembly and not serviceable components.

1. Disconnect the battery ground cable. For additional information, refer toSection 414-01 Battery, Mounting and Cables.
2. Remove the front seat. For additional information, refer to Section 501-10 Seating.
3. Disconnect the safety belt pretensioner electrical connector.

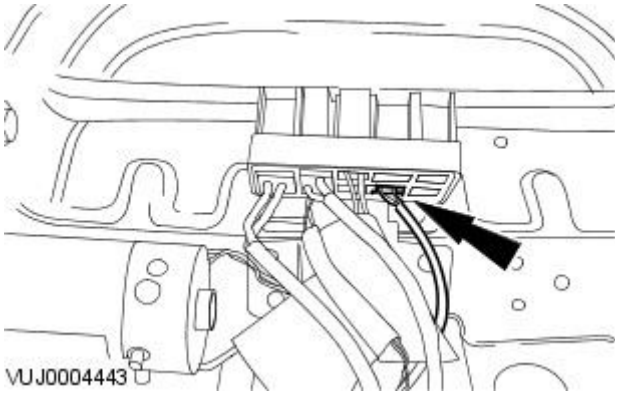

4. Disconnect the safety belt buckle electrical connector.

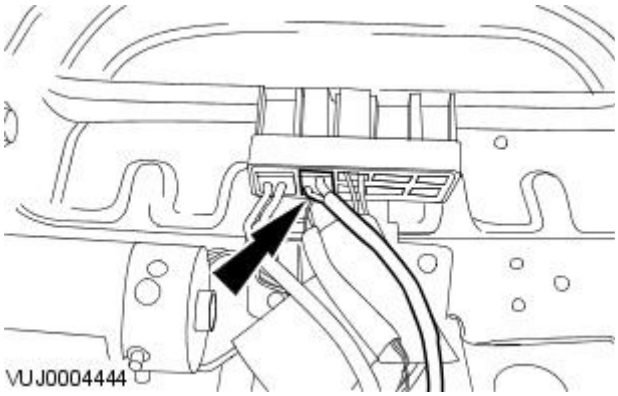

5. Detach the safety belt buckle and pretensioner wiring harness.

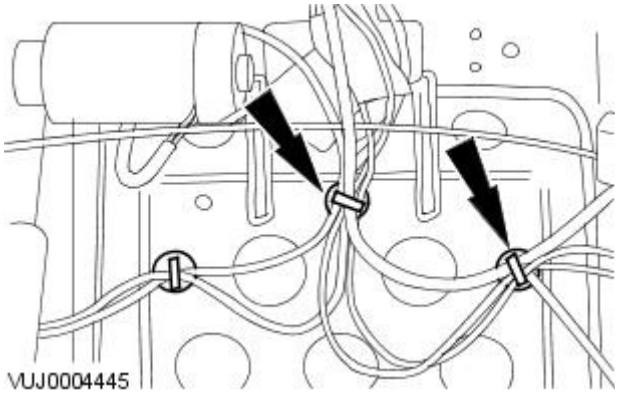

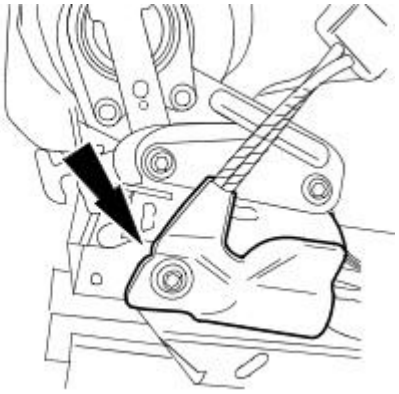

VUJ0004446

6. Remove the safety belt buckle and pretensioner.

- Remove the retaining bolt.

Installation

• WARNINGS:

To avoid accidental deployment and possible personal injury, the backup power supply must be depleted before repairing or replacing any air bag ORS components. To deplete the backup power supply energy, disconnect the battery ground cable and wait one minute. Failure to follow this instructions may result in personal injury.

Never probe the connectors on the air bag module or pretensioners. Doing so may result in deployment. Failure to follow this instructions may result in personal injury.

All safety belt assemblies including retractors, buckles, front safety belt buckle support assemblies (slider bar), if equipped, child safety seat tether brackets (if equipped) and attaching hardware should be inspected after any collision. New safety belt assemblies should be fitted unless a qualified technician finds the assemblies, show no damage and operate correctly. New safety belt assemblies should also be fitted where safety belt assemblies not in use during a collision, are inspected and damage or incorrect operation is noted. Failure to follow these instructions may result in personal injury.

CAUTION: Electronic modules are sensitive to static electrical charges. If exposed to these charges, damage may result.

• NOTE: Repair is made by replacement only. If a part is replaced and the new part does not correct the condition, install the original part and carry out the diagnostic procedure again.

• NOTE: The front seat belts, which incorporate the seat belt retractors and pretensioners are supplied as an assembly and not serviceable components.

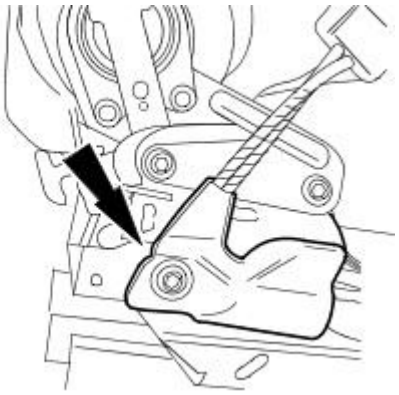

VUJ0004446

1. To install reverse the removal procedure.

- Tighten to 50 Nm.

Supplemental Restraint System -

Torque Specifications

Description	Nm	Lb / Ft	Lb / In
Restraints control module (RCM) retaining bolts	12	9	-
Driver air bag module retaining bolts	5	-	44
Passenger air bag module retaining bolts	9	-	80
Side air curtain module retaining bolts	9	-	80
Side impact sensor retaining bolt	12	9	-
Crash sensor retaining bolt	12	9	-
Driver lower air bag module retaining bolts	11	8	-

Published: 11-May-2011

Supplemental Restraint System - Air Bag Supplemental Restraint System (SRS)

Description and Operation

WARNING: All pyrotechnic devices are dangerous. Before performing any procedures on any pyrotechnic device, read all information contained within the Standard Workshop Practices section of this manual.
For additional information, refer to: Standard Workshop Practices (100-00 General Information, Description and Operation).

The SRS is designed to provide increased collision protection for front seat occupants in addition to that provided by the three-point safety belt system. Safety belt use is necessary to obtain the best occupant protection and to receive the full advantages of the SRS.

Air Bag Supplemental Restraint System (SRS) Components

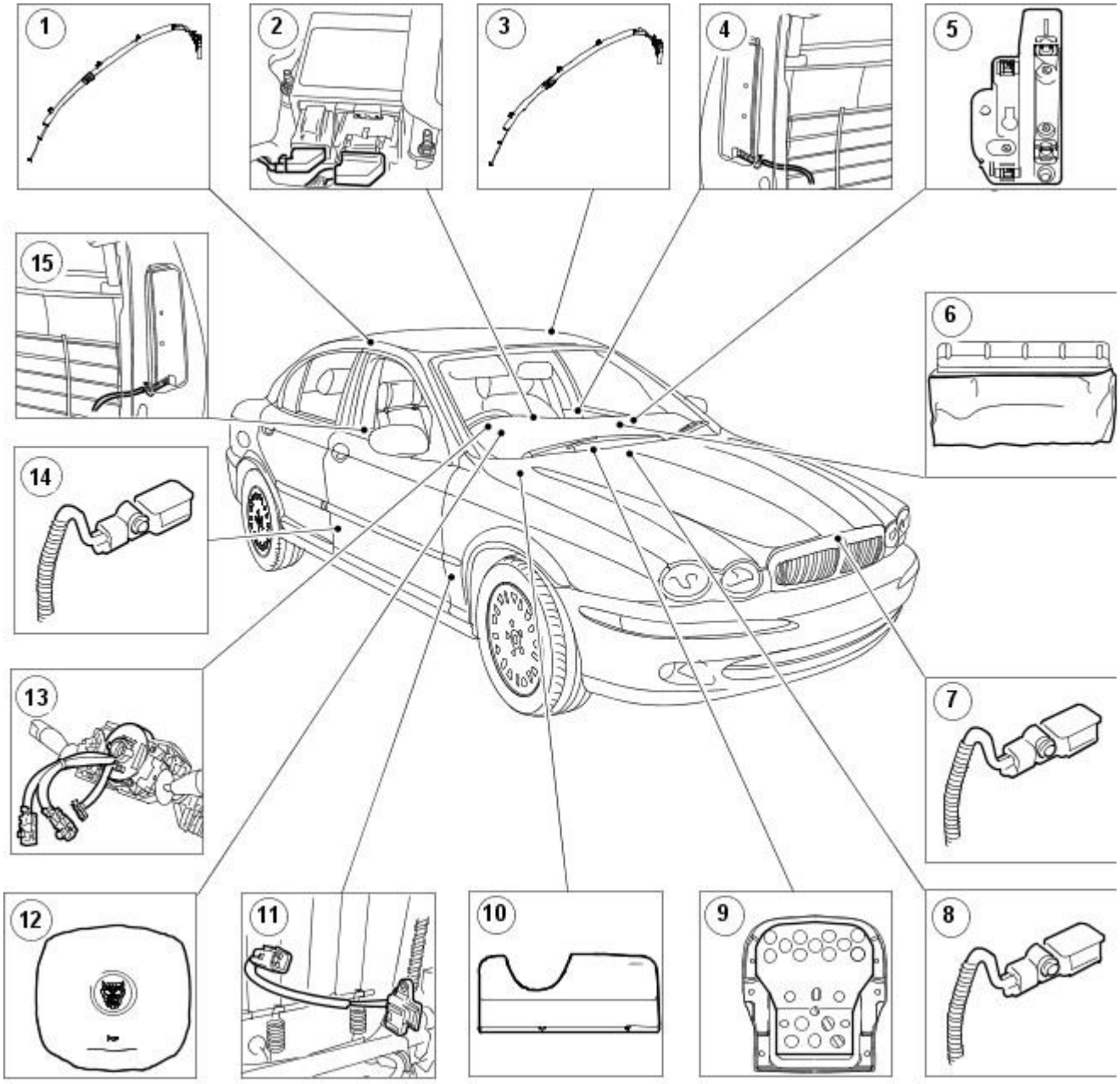

E48382

Item	Part Number	Description
1	—	Side air curtain module
2	—	Restraints control module (RCM)
3	—	Side air curtain module
4	—	Side air bag module
5	—	Passenger air bag deactivation (PAD) indictor
6	—	Passenger air bag module
7	—	Crash sensor
8	—	Side impact sensor
9	—	Passenger weight sensor
10	—	Driver lower air bag module
11	—	Seat track position sensor
12	—	Driver air bag module
13	—	Air bag sliding contact
14	—	Side impact sensor
15	-	Side air bag module

Restraints Control Module (RCM)

The restraints control module (RCM):

- The primary purpose of the restraints control system is to discriminate between an event that warrants supplemental restraints system deployment and an event that does not. The air bag control module, located under the floor console, governs the operation of the whole system and performs continual system diagnostics. Information on the severity of an impact is received from the crash sensor. In the event of a side impact, in excess of a predetermined limit, the air bag control module will evaluate the signal received from either of the side impact sensors against stored data and deploy the corresponding side air bag module and the side air curtain module. In the event of a frontal impact, in excess of a predetermined limit, the air bag control module will evaluate the signal received from the front crash sensor against stored data and deploy the front air bag modules and the safety belt buckle pretensioners. Variations in the deployment of the front air bag modules are dependent on the status of the driver seat track position, passenger weight sensor and the front safety belt buckles.

Driver Air bag Module

The drivers air bag module:

- The driver air bag module is replaced as an assembly.
- There is no routine maintenance required for this part and there are no serviceable parts.
- The driver air bag module is fitted to the steering wheel, the cover forming the outer surface of the steering wheel boss. The cover has invisible split lines molded in its surface allowing the air bag to easily exit through the cover when the system deploys.

Passenger Air Bag Module

The passenger air bag module:

- The passenger air bag module is replaced as an assembly.
- There is no routine maintenance required for this part and there are no serviceable parts.
- The passenger air bag module is located above the glove compartment behind the finish panel. The air bag control module will only deploy the passenger air bag provided that the passenger weight sensor senses that the seat is occupied.

Deployment Door

The deployment door:

- Is an integral part of the instrument panel with a textured finish.
- The deployment door is tethered and moves out of the way when the air bag inflates, and hinges out of the way during deployment.
- Must not be repainted for any reason.

Inflator

The inflator:

- Both driver and passenger air bag inflators have a two stage inflation system, this means there are two air bag connections to be made. The two connectors are coded to ensure that the connection is made correctly.
- Receives electrical charge when the air bag sensor is activated.
- Contains an igniter that converts the electrical signal to thermal energy (heat), causing the ignition of the inflator gas generant.
- Inflates the air bag after the sodium azide/copper oxide combustion occurs.
- Is a component of the driver air bag module and passenger air bag module and is not replaced separately.

Side Air Curtain Module

The side air curtain module:

- Is replaced as an assembly.
- The side air curtain modules are fixed between the A-pillar and C-pillar under the headliner and deployed at the same time as the corresponding seat mounted side air bag. If the passenger air bag is deactivated the corresponding side air bag is also deactivated. When deployed, the side air curtain module extends down to approximately shoulder height to protect both the front and rear occupants heads. The side air curtain module is stabilized at the A-pillar and C-pillar by tethers. The side curtain module uses compressed argon to inflate the air bag.

Side Air Bag Module - Front Seat

The side air bag module:

- Is replaced as an assembly.
- The side air bag module is mounted in the outboard bolster of each front seat and uses compressed argon to inflate. It provides protection for the thorax (the part of the torso between the neck and the abdomen). To ensure that the air bag emerges at the same point, a chute has been designed into the inside of the seat trim cover and wrapped around the air bag module. In a side air bag module deployment situation, the air bag module deploys through a stitched seam in the side bolster.

Air Bag Sliding Contact

The air bag sliding contact:

- The air bag sliding contact does not contain any serviceable components.
- The air bag sliding contact is mounted on the steering column, behind the steering wheel.
- The air bag sliding contact continuously transfers electrical signals from the driver air bag module to the air bag sensor.

Side Impact Sensors

The side impact sensors:

- The side impact sensors are mounted at the base of the B-pillars to facilitate lateral impact sensing. In the event of a side impact, the air bag control module processes the crash data sent by the side impact sensor against stored data. The air bag control module will deploy the side air bag and, if equipped, the side air curtain on the side the deployment request was initiated.

Crash Sensor

The crash sensor:

- The front crash sensor is located under the grill opening panel to facilitate impact sensing along the longitudinal axis. The air bag control module processes the crash data sent by the front crash sensor against stored data, and deploys the front air bags.

Seat Track Position Sensor

The seat track position sensor:

- The seat track position sensor is located on the driver seat track. The seat position sensor determines the position of the driver seat, which is then communicated to the restraints control module. If the driver seat is in the forward position, the driver air bag second stage is disabled.

Passenger Weight Sensor

The passenger weight sensor:

- The occupant classification sensor detects, by integrated pressure sensors, the presence of a passenger or object on the seat cushion. The occupant classification sensor cannot discriminate between a passenger and an object. The electronic control unit processes the pressure information and, if the pressure exceeds a threshold, an occupied seat state is communicated through the wiring harness to the air bag control module. If the seat is empty or occupied by a very light object an empty seat state is transmitted to the air bag control module and the passenger air bag will be deactivated to avoid unnecessary repair costs. If the seat is empty and the safety belt is buckled the passenger air bag deactivation indicator will be illuminated. The occupant classification sensor system is not affected by the position of the passenger seat.

Driver lower air bag module

The driver lower air bag module:

- There is no routine maintenance required for this part and there are no serviceable parts.
- The driver lower air bag module is replaced as an assembly.

- The driver lower air bag module is fitted to enhance lower limb protection. The driver lower air bag module is located below the steering wheel in the instrument panel and is retained by two bolts and two spring clips.

Passenger Air Bag Deactivation (PAD) Indictor

The Passenger air bag deactivation (PAD) Indictor:

- The passenger air bag deployment door has a built in lens that displays the passenger air bag module deactivated symbol. The symbol is backlit by the PAD indicator. The illumination of the symbol informs the front seat occupants whether or not the passenger air bag has been deactivated by the occupancy sensing system. The PAD indicator is located under the vent finish panel in front of the passengers seat.

Supplemental Restraint System - Air Bag Supplemental Restraint System (SRS)

Diagnosis and Testing

Principle of operation

The SRS is an intelligent system, in that it deploys the appropriate airbag module for any impact event, based on information provided by the sensors around the vehicle.

Working in conjunction with the safety belt system, the SRS will provide the maximum protection for the vehicle occupants wherever the impact occurs.

In the event of a severe frontal impact, the **restraints control module (RCM)** will deploy the safety belt pretensioners and/or the front airbags as necessary, by measuring the impact via the **crash sensor** and comparing the measurement against data stored in it's memory.

In the event of a side impact, the RCM uses information from the **side impact sensors** to determine if the **thoracic** and/or **curtain airbags** should be deployed.

Occupancy classification sensor

In addition to determining the best deployment of the airbags from impact data, the system uses information from the occupancy classification sensor to control the two-stage airbag used in the **passenger airbag module**, and relays this information to the occupants via the **passenger airbag deactivation (PAD)** lamp.

PAD lamp strategy

Passenger seat status	Passenger airbag status	PAD lamp status
Empty	**OFF**	**OFF**
Empty, but safety belt fastened	**OFF**	**ON**
Occupied (small occupant)	**OFF**	**ON**
Occupied (large occupant)	**ON**	**OFF**

Seat track position sensor

To determine the level of deployment of the **front airbag modules**, the system also uses inputs from the seat track position sensor.

The system will not deploy the second stage of the airbag if the front occupants are too close to the front airbag modules.

Safety information

• WARNINGS:

To avoid accidental deployment and possible personal injury, the backup power supply must be depleted before repairing or replacing any air bag SRS components. To deplete the backup power supply energy, disconnect the battery ground cable and wait for one minute. Failure to follow this instruction may result in personal injury.

Always wear safety glasses when repairing an air bag SRS vehicle and when handling an air bag module. Failure to follow this instruction may result in personal injury.

Carry a live air bag module with the air bag and trim cover pointed away from your body. This will reduce the risk of injury in the event of an accidental deployment. Failure to follow this instruction may result in personal injury.

Do not set a live air bag module down with the trim cover face down. Failure to follow this instruction may result in personal injury.

After deployment, the air bag surface can contain deposits of sodium hydroxide, a product of the gas generant combustion that is irritating to the skin. Wash your hands with soap and water afterwards. Failure to follow this instruction may result in personal injury.

Never probe the connectors on the air bag module. Doing so may result in air bag deployment. Failure to follow this instruction may result in personal injury.

In the event of an incident in which the air bags have been deployed, **ALL** safety belts that were in use at the time of the incident must be removed and new safety belts must be installed. Failure to follow this instruction may result in personal injury.

After five incidents involving the deployment of SRS components, the restraints control module must be replaced. Failure to follow this instruction may result in personal injury.

1. **1.** These warnings should be observed whenever working on the SRS and/or it's components.

Flash codes

Self check (no fault on system)

1. **1.** Turn the ignition switch to the **ON** position.
2. **2.** Observe the airbag warning light function.

- Warning light **ON** solid for six seconds.
- Warning light goes off and stays off.

Fault on system

3. **3.** Turn the ignition switch to the **ON** position.
4. **4.** Observe the airbag warning light function.

- Warning light **ON** solid for six seconds.
- Warning light goes off for two seconds.
- Warning light flashes the appropriate number of times for the fault logged (see below).
- Warning light goes off for two seconds.
- The sequence is repeated five times.
- Warning light stays **ON** until the ignition is switched **OFF**.

Example

Flash code 16 would be shown as lamp **ON** for one occurence of 0.5 seconds, then lamp **OFF** for one second, followed by six occurences of lamp flashing **ON/OFF** for 0.5 seconds each (1 - 6).

Warning tones

In the event of a second fault occurring whilst there is a warning light fault, there will be an audible warning, initiated by the instrument cluster.

This secondary warning will be activated when the SRS system detects any additional fault, other than a warning light fault.

The secondary warning will consist of five sets of five tone bursts, each set of five tones being separated by a five second silence.

This sequence will be repeated approximately every 30 minutes.

Preliminary inspection

Mechanical	Electrical
• Check all visible SRS components for damage/security	• Carry out self-check as above • Check fuses (for additional information, refer to the wiring diagrams) • Only after checking fuses, check connections and harnesses to SRS components for correct fitment/damage • For module power and ground circuit tests, REFER to: Communications Network - VIN Range: E96603->J28492 (418-00 Module Communications Network, Diagnosis and Testing).

Diagnostic trouble code (DTC) flash code index

• NOTE: Other DTCs and flash codes may be stored, relating to the safety belt system,
REFER to: Safety Belt System (501-20A Safety Belt System, Diagnosis and Testing).

DTC / Flash code	Condition	Possible source	Action
B1231 Flash code 13	Crash data memory full	• Restraints control module (RCM) fault • Stored impact data	Please check part is not on any form of prior authorisation before replacement.
B1317 Continuous lamp	Battery voltage high	• Module input voltage greater than 15 volts	Suspect charging system fault. Refer to charging system tests.
B1318 Continuous lamp	Battery voltage low	• Module input voltage less than 10.4 volts	Suspect charging system fault. Refer to charging system tests.
B1342	RCM internal fault	• RCM fault	Please check part is not on any form of prior authorisation before replacement.
B1869 Note, If a system fault occurs at the same time as a MIL fault, a tone will sound as well as the MIL illumination (see '**warning tones**' above).	Airbag MIL circuit fault	• Airbag MIL circuit; open circuit, short circuit to ground	For MIL circuit tests, GO to Pinpoint Test A.
B1870	Airbag MIL circuit fault	• Airbag MIL circuit; short circuit to battery	For MIL circuit tests, GO to Pinpoint Test A.
B1884 Flash code 18	Passenger airbag deactivated (PAD) indicator lamp circuit fault	• PAD indicator lamp circuit; open circuit, short circuit to ground	For PAD circuit tests, GO to Pinpoint Test B.
B1890 Flash code 18	Passenger airbag deactivated (PAD) indicator lamp circuit fault	• PAD indicator lamp circuit; short circuit to battery	For PAD circuit tests, GO to Pinpoint Test B.
B1921 Flash code 14	RCM internal airbag diagnostic monitor ground circuit fault	• RCM mounting bracket contact; open circuit, high resistance	WARNING: To avoid accidental deployment and possible personal injury, the backup power supply must be depleted before repairing or replacing any air bag SRS components. To deplete the backup power supply energy, disconnect the battery ground cable and wait for one minute. Failure to follow this instruction may result in personal injury. Ensure a clean electrical contact between the RCM and ground. Ensure the fasteners are correctly torqued.
B2293 Flash code 19 - driver	Airbag circuit status fault	• Driver airbag circuit fault	For airbag circuit tests, GO to Pinpoint Test C.
B2293 Flash code 23 - passenger	Airbag circuit status fault	• Passenger airbag circuit fault	For airbag circuit tests, GO to Pinpoint Test C.
B2294 Flash code 24 - driver	Curtain airbag circuit status fault	• Driver curtain airbag circuit; status fault	For curtain airbag circuit tests, GO to Pinpoint Test D.

DTC / Flash code	Condition	Possible source	Action
B2294 Flash code 25 - passenger	Curtain airbag circuit status fault	• Passenger curtain airbag circuit; status fault	For curtain airbag circuit tests, GO to Pinpoint Test D.
B2295 Flash code 22 - driver	Side airbag circuit status fault	• Driver side airbag circuit; status fault	For side airbag circuit tests, GO to Pinpoint Test E.
B2295 Flash code 23 - passenger	Side airbag circuit status fault	• Passenger side airbag circuit; status fault	For side airbag circuit tests, GO to Pinpoint Test E.
B2988 Flash code 28	Knee bolster circuit open circuit	• Knee bolster ground circuit; open circuit • Knee bolster power circuit; open circuit	For knee bolster circuit tests, GO to Pinpoint Test K.
B2989 Flash code 28	Knee bolster circuit short to battery	• Knee bolster ground circuit; short circuit to battery • Knee bolster power circuit; short circuit to battery	For knee bolster circuit tests, GO to Pinpoint Test K.
B2990 Flash code 28	Knee bolster circuit short to ground	• Knee bolster ground circuit; short circuit to ground • Knee bolster power circuit; short circuit to ground	For knee bolster circuit tests, GO to Pinpoint Test K.
B2991 Flash code 28	Knee bolster squib resistance low	• Resistance low or short circuit across airbag module	For knee bolster circuit tests, GO to Pinpoint Test K.
B2296 Flash code 42 - front impact sensor	Front impact sensor circuit status fault	• Impact sensor circuit; status fault	For front impact sensor circuit tests, GO to Pinpoint Test F.
B2296 Flash code 43 - front driver side impact sensor	Front driver side impact sensor circuit status fault	• Impact sensor circuit; status fault	For front driver side impact sensor circuit tests, GO to Pinpoint Test G.
B2296 Flash code 44 - front passenger side impact sensor	Front passenger side impact sensor circuit status fault	• Impact sensor circuit; status fault	For front passenger side impact sensor circuit tests, GO to Pinpoint Test H.
B2296 Flash code 45 - rear driver side impact sensor	Impact sensor circuit status fault	• Impact sensor circuit; status fault	For rear driver side impact sensor circuit tests, GO to Pinpoint Test I.
B2296 Flash code 46 - rear passenger side impact sensor	Impact sensor circuit status fault	• Impact sensor circuit; status fault	For rear passenger side impact sensor circuit tests, GO to Pinpoint Test J.
B2477 Flash code 54 (continuous lamp)	RCM configuration fault	• RCM configuration fault	Reconfigure the module using the Jaguar approved diagnostic system
C1947 Flash code 49	Driver seat track position sensor circuit fault	• Driver seat track position sensor circuit; short circuit to ground	For driver seat track position sensor circuit tests, GO to Pinpoint Test L.
C1948 Flash code 49	Driver seat track position sensor circuit fault	• Current out of range • Feature present, but not expected	Check configuration using the Jaguar approved diagnostic system. For driver seat track position sensor circuit tests, GO to Pinpoint Test L.
C1981 Flash code 49	Driver seat track position sensor circuit fault	• Driver seat track position sensor circuit; open circuit, short circuit to battery	For driver seat track position sensor circuit tests, GO to Pinpoint Test L.

Additional tests for changes to be introduced

DTC	Condition	Possible source	Action
C2200 Flash code 48	Passenger seat track position sensor circuit fault	• Passenger seat track position sensor circuit; open circuit • Passenger seat track position sensor circuit; short circuit to battery	For passenger seat track position sensor circuit tests, GO to Pinpoint Test M.
C2202 Flash code 48	Passenger seat track position sensor circuit short circuit to ground	• Passenger seat track position sensor circuit; short circuit to ground	For passenger seat track position sensor circuit tests, GO to Pinpoint Test M.
C2204 Flash code 48	Passenger seat track position sensor circuit resistance out of range	• Current out of range • Feature present, but not expected	Check configuration using the Jaguar approved diagnostic system. For passenger seat track position sensor circuit tests, GO to Pinpoint Test M.
B2290 Flash code 16 PID $5952/5959 (bit 3)	Occupant classification sensor (OCS) system fault	• OCS module fault	Check the power and ground to the module, GO to Pinpoint Test N. Please check part is not on any form of prior authorisation before replacement.

DTC	Condition	Possible source	Action
B2290 Flash code 16 PID $5952/5959 (bit 2)	Occupant classification sensor (OCS) system fault	• OCS module communications fault	For communication circuit tests, GO to Pinpoint Test N. For more detailed CAN circuit tests, REFER to: Communications Network - VIN Range: E96603->J28492 (418-00 Module Communications Network, Diagnosis and Testing).
B2290 Flash code 16 PID $5952/5959 (bit 1)	Occupant classification sensor (OCS) system fault	• OCS module calibration fault	Check that the OCS is the correct unit for the vehicle. Please check part is not on any form of prior authorisation before replacement.
B2290 Flash code 16 PID $5952/5959 (bit 0)	Occupant classification sensor (OCS) system fault	• OCS module sensing element fault	Install a new OCS, REFER to: Occupant Classification Sensor (501-20B Supplemental Restraint System, Removal and Installation).

Pinpoint tests

PINPOINT TEST A : B1869, B1870: AIRBAG MIL CIRCUIT FAULT	
TEST CONDITIONS	**DETAILS/RESULTS/ACTIONS**
A1: CHECK THE AIRBAG WARNING LIGHT CIRCUIT FOR HIGH RESISTANCE	
WARNING: To avoid accidental deployment and possible personal injury, the backup power supply must be depleted before repairing or replacing any air bag SRS components. To deplete the backup power supply energy, disconnect the battery ground cable and wait for one minute. Failure to follow this instruction may result in personal injury.	
	1 Disconnect the battery negative terminal.
	2 Wait one minute for the backup power supply to deplete.
	3 Disconnect the RCM connector, IP74.
	4 Disconnect the instrument cluster connector, IP11.
	5 Measure the resistance between IP74, pin 19 (U) and IP11, pin 19 (U).
	Is the resistance greater than 5 ohms? **Yes** REPAIR the high resistance circuit. For additional information, refer to the wiring diagrams. Clear the DTC, test the system for normal operation. **No** GO to A2.
A2: CHECK THE AIRBAG WARNING LIGHT CIRCUIT FOR SHORT CIRCUIT TO B+	
	1 Reconnect the battery negative terminal.
	2 Measure the voltage between IP74, pin 19 (U) and GROUND.
	Is the voltage greater than 3 volts? **Yes** REPAIR the short circuit. For additional information, refer to the wiring diagrams. Clear the DTC, test the system for normal operation. **No** The LEDs in the instrument cluster are not serviceable. Install a new instrument cluster. Clear the DTC, test the system for normal operation. If the fault is still apparent, install a new RCM. REFER to: Restraints Control Module (RCM) (501-20B Supplemental Restraint System, Removal and Installation).

PINPOINT TEST B : B1884, B1890: PASSENGER AIRBAG DEACTIVATION (PAD) LAMP CIRCUIT FAULT	
TEST CONDITIONS	**DETAILS/RESULTS/ACTIONS**
B1: CHECK THE PAD LAMP LED	
	1 Disconnect the PAD lamp connector, IP140.
	2 Measure the resistance between IP140, pins 01 (GR) and 03 (O).
	Is the resistance less than 10,000 ohms? **Yes** GO to B2. **No** INSTALL a new PAD lamp LED. REFER to: Passenger Air Bag Deactivation (PAD) Indicator (501-20B Supplemental Restraint System, Removal and Installation). Clear the DTC, test the system for normal operation.
B2: CHECK THE PAD LAMP SUPPLY CIRCUIT FOR OPEN CIRCUIT	
	1 Turn the ignition switch to the **ON** position.
	2 Measure the voltage between IP140, pin 01 (GR) and GROUND.
	Is the voltage less than 10 volts? **Yes** REPAIR the circuit between the PAD lamp and battery. This circuit includes the primary junction box, fuses 31 and 41, the ignition switch, and the front power distribution box, fuse 39. For additional information, refer to the wiring diagrams. Clear the DTC, test the system for normal operation. **No** GO to B3.
B3: CHECK THE PAD LAMP SUPPLY CIRCUIT FOR SHORT CIRCUIT TO B+	
	1 Turn the ignition switch to the **OFF** position.
	2 Measure the voltage between IP74, pin 15 (O) and GROUND.
	Is the voltage greater than 3 volts? **Yes** REPAIR the short circuit. For additional information, refer to the wiring diagrams. Clear the DTC, test the system for normal operation. **No** GO to B4.
B4: CHECK THE PAD LAMP TRIGGER CIRCUIT FOR HIGH RESISTANCE	
	1 Disconnect the RCM connector, IP74.
	2 Measure the resistance between IP140, pin 03 (O) and IP74, pin 15 (O).

	Is the resistance greater than 5 ohms? **Yes** REPAIR the high resistance circuit. For additional information, refer to the wiring diagrams. Clear the DTC, test the system for normal operation. **No** GO to B5.

B5: CHECK THE PAD LAMP TRIGGER CIRCUIT FOR SHORT CIRCUIT TO GROUND

	1 Measure the resistance between IP40, pin 03 (O) and GROUND.
	Is the resistance less than 10,000 ohms? **Yes** REPAIR the short circuit. For additional information, refer to the wiring diagrams. Clear the DTC, test the system for normal operation. **No** INSTALL a new RCM. REFER to: Restraints Control Module (RCM) (501-20B Supplemental Restraint System, Removal and Installation).

PINPOINT TEST C : B2293 (FLASH CODE 19 AND/OR 23): AIRBAG CIRCUIT STATUS FAULT

TEST CONDITIONS	DETAILS/RESULTS/ACTIONS

C1: CHECK THE AIRBAG CIRCUIT STATUS WITH SIMULATORS IN PLACE

WARNING: To avoid accidental deployment and possible personal injury, the backup power supply must be depleted before repairing or replacing any air bag SRS components. To deplete the backup power supply energy, disconnect the battery ground cable and wait for one minute. Failure to follow this instruction may result in personal injury.

	1 Disconnect the battery negative terminal.
	2 Wait one minute for the backup power supply to deplete. For flash code 19 ● Disconnect the driver airbag module connectors, SW01 and SW02. For flash code 23 ● Disconnect the passenger airbag module connectors, IP36 and IP37.
	3 Connect the simulators in place of the airbag modules.
	4 Reconnect the battery negative terminal.
	5 Clear the DTC.
	6 Turn the ignition switch to the **ON** position.
	7 Recheck the DTCs and flash codes.
	Are there any DTCs and/or flash codes set with the simulators in place? **Yes** GO to C2. **No** INSTALL a new airbag module for the relevant side, REFER to: Driver Air Bag Module (501-20B Supplemental Restraint System, Removal and Installation) / Passenger Air Bag Module (501-20B Supplemental Restraint System, Removal and Installation).

C2: CHECK THE STAGE 1 CIRCUIT BETWEEN THE AIRBAG MODULE AND THE RCM FOR OPEN CIRCUIT

WARNING: To avoid accidental deployment and possible personal injury, the backup power supply must be depleted before repairing or replacing any air bag SRS components. To deplete the backup power supply energy, disconnect the battery ground cable and wait for one minute. Failure to follow this instruction may result in personal injury.

	1 Disconnect the battery negative terminal.
	2 Wait one minute for the backup power supply to deplete.
	3 Disconnect the RCM connector, For vehicles with 2.0L engine; ● CA165. For vehicles with 2.5/3.0L engine; ● CA450.
	4 Disconnect the simulators.
	5 Measure the resistance between: For flash code 19 ● SW02, pin 01 (G) and the RCM connector, pin 01 (G) ● SW02, pin 02 (B) and the RCM connector, pin 02 (B) For flash code 23 ● IP36, pin 01 (RW) and the RCM connector, pin 03 (RW) ● IP36, pin 02 (BW) and the RCM connector, pin 04 (BW)
	Are any of the resistances greater than 5 ohms? **Yes** GO to C4. **No** GO to C3.

C3: CHECK THE STAGE 2 CIRCUIT BETWEEN THE AIRBAG MODULE AND THE RCM FOR OPEN CIRCUIT

	1 Measure the resistance between: For flash code 19 ● SW01, pin 01 (G) and the RCM connector, pin 05 (G) ● SW01, pin 02 (B) and the RCM connector, pin 06 (B) For flash code 23

	• IP37, pin 01 (RW) and the RCM connector, pin 13 (RW) • IP37, pin 02 (BW) and the RCM connector, pin 14 (BW)
	Are any of the resistances greater than 5 ohms? **Yes** GO to C4. **No** INSTALL a new RCM. REFER to: Restraints Control Module (RCM) (501-20B Supplemental Restraint System, Removal and Installation). Clear the DTC, test the system for normal operation.
C4: CHECK THE CIRCUITS BETWEEN THE CLOCKSPRING AND THE RCM FOR OPEN CIRCUIT	
	1 Disconnect the clockspring connector, IP34.
	2 Measure the resistance between: • IP34, pin 10 (B) and the RCM connector, pin 02 (B) • IP34, pin 09 (G) and the RCM connector, pin 01 (G) • IP34, pin 02 (B) and the RCM connector, pin 06 (B) • IP34, pin 01 (G) and the RCM connector, pin 05 (G)
	Are any of the resistances greater than 5 ohms? **Yes** REPAIR the high resistance circuit. For additional information, refer to the wiring diagrams. Clear the DTC, test the system for normal operation. **No** GO to C5.
C5: CHECK THE CIRCUITS THROUGH THE CLOCKSPRING FOR HIGH RESISTANCE	
	1 Measure the resistance between: • SW01, pin 01 (G) and IP34, pin 01 (G) • SW01, pin 02 (B) and IP34, pin 02 (G) • SW02, pin 01 (G) and IP34, pin 01 (G) • SW02, pin 02 (B) and IP34, pin 02 (B)
	Are any of the resistances greater than 5 ohms? **Yes** INSTALL a new clockspring. REFER to: Clockspring (501-20B Supplemental Restraint System, Removal and Installation). **No** INSTALL a new RCM. REFER to: Restraints Control Module (RCM) (501-20B Supplemental Restraint System, Removal and Installation). Clear the DTC, test the system for normal operation.

PINPOINT TEST D : B2294: (FLASH CODE 24 AND/OR 25): CURTAIN AIRBAG CIRCUIT STATUS FAULT	
TEST CONDITIONS	**DETAILS/RESULTS/ACTIONS**
D1: CHECK THE CURTAIN AIRBAG CIRCUIT STATUS WITH SIMULATORS IN PLACE	
WARNING: To avoid accidental deployment and possible personal injury, the backup power supply must be depleted before repairing or replacing any air bag SRS components. To deplete the backup power supply energy, disconnect the battery ground cable and wait for one minute. Failure to follow this instruction may result in personal injury.	
	1 Disconnect the battery negative terminal.
	2 Wait one minute for the backup power supply to deplete. For flash code 24 • Disconnect the driver curtain airbag module connector, CA144. For flash code 25 • Disconnect the passenger curtain airbag module connector, CA145.
	3 Connect the simulator(s) in place of the airbag module(s).
	4 Reconnect the battery negative terminal.
	5 Clear the DTC.
	6 Turn the ignition switch to the **ON** position.
	7 Recheck the DTCs and flash codes.
	Are there any DTCs and/or flash codes set with the simulator(s) in place? **Yes** GO to D2. **No** INSTALL a new curtain airbag module for the relevant side, REFER to: Side Air Curtain Module - 4-Door (501-20B Supplemental Restraint System, Removal and Installation) / Side Air Curtain Module - Wagon (501-20B Supplemental Restraint System, Removal and Installation).
D2: CHECK THE CIRCUITS BETWEEN THE CURTAIN AIRBAG MODULE AND THE RCM FOR OPEN CIRCUIT	
WARNING: To avoid accidental deployment and possible personal injury, the backup power supply must be depleted before repairing or replacing any air bag SRS components. To deplete the backup power supply energy, disconnect the battery ground cable and wait for one minute. Failure to follow this instruction may result in personal injury.	
	1 Disconnect the battery negative terminal.
	2 Wait one minute for the backup power supply to deplete.
	3 Disconnect the simulator(s).
	4 Disconnect the RCM connector, For vehicles with 2.0L engine; • CA165. For vehicles with 2.5/3.0L engine;

	• CA450.
	5 Measure the resistance between: For flash code 24 • The RCM connector, pin 03 (RW) and CA144, pin 01 (RW) • The RCM connector, pin 04 (BW) and CA144, pin 02 (BW) For flash code 25 • The RCM connector, pin 05 (RW) and CA145, pin 01 (RW) • The RCM connector, pin 06 (BW) and CA145, pin 02 (BW)
	Are any of the resistances greater than 5 ohms? **Yes** REPAIR the high resistance circuit. For additional information, refer to the wiring diagrams. Clear the DTC, test the system for normal operation. **No** INSTALL a new RCM. REFER to: Restraints Control Module (RCM) (501-20B Supplemental Restraint System, Removal and Installation). Clear the DTC, test the system for normal operation.

PINPOINT TEST E : B2295 (FLASH CODE 22 AND/OR 23): SIDE AIRBAG CIRCUIT STATUS FAULT	
TEST CONDITIONS	**DETAILS/RESULTS/ACTIONS**
E1: CHECK THE SIDE AIRBAG CIRCUIT STATUS WITH SIMULATORS IN PLACE	
WARNING: To avoid accidental deployment and possible personal injury, the backup power supply must be depleted before repairing or replacing any air bag SRS components. To deplete the backup power supply energy, disconnect the battery ground cable and wait for one minute. Failure to follow this instruction may result in personal injury.	
	1 Disconnect the battery negative terminal.
	2 Wait one minute for the backup power supply to deplete. For flash code 22 • Disconnect the driver side airbag module connector, AL01. For flash code 23 • Disconnect the passenger side airbag module connector, AD01.
	3 Connect the simulator(s) in place of the airbag module(s).
	4 Reconnect the battery negative terminal.
	5 Clear the DTC.
	6 Turn the ignition switch to the **ON** position.
	7 Recheck the DTCs and flash codes.
	Are there any DTCs and/or flash codes set with the simulator(s) in place? **Yes** GO to E2. **No** INSTALL a new side airbag module for the relevant side. REFER to: Side Air Curtain Module - 4-Door (501-20B Supplemental Restraint System, Removal and Installation) / Side Air Curtain Module - Wagon (501-20B Supplemental Restraint System, Removal and Installation). Clear the DTC, test the system for normal operation.
E2: CHECK THE CIRCUITS BETWEEN THE SIDE AIRBAG MODULE AND THE RCM FOR OPEN CIRCUIT	
WARNING: To avoid accidental deployment and possible personal injury, the backup power supply must be depleted before repairing or replacing any air bag SRS components. To deplete the backup power supply energy, disconnect the battery ground cable and wait for one minute. Failure to follow this instruction may result in personal injury.	
	1 Disconnect the battery negative terminal.
	2 Wait one minute for the backup power supply to deplete.
	3 Disconnect the simulator(s).
	4 Disconnect the RCM connector, For vehicles with 2.0L engine; • CA165. For vehicles with 2.5/3.0L engine; • CA450.
	5 Measure the resistance between: For flash code 22 • The RCM connector, pin 01 (RW) and AL01, pin 01 (RW) • The RCM connector, pin 02 (BW) and AL01, pin 02 (BW) For flash code 23 • The RCM connector, pin 21 (RW) and AD01, pin 01 (RW) • The RCM connector, pin 22 (BW) and AD01, pin 02 (BW)
	Are any of the resistances greater than 5 ohms? **Yes** REPAIR the high resistance circuit. For additional information, refer to the wiring diagrams. Clear the DTC, test the system for normal operation. **No**

	INSTALL a new RCM. REFER to: Restraints Control Module (RCM) (501-20B Supplemental Restraint System, Removal and Installation). Clear the DTC, test the system for normal operation.

PINPOINT TEST F : B2296 (FLASH CODE 42): FRONT IMPACT SENSOR CIRCUIT STATUS FAULT	
TEST CONDITIONS	**DETAILS/RESULTS/ACTIONS**
F1: CHECK THE POWER SUPPLY TO THE FRONT IMPACT SENSOR	
WARNING: To avoid accidental deployment and possible personal injury, the backup power supply must be depleted before repairing or replacing any air bag SRS components. To deplete the backup power supply energy, disconnect the battery ground cable and wait for one minute. Failure to follow this instruction may result in personal injury.	
	1 Disconnect the battery negative terminal.
	2 Wait one minute for the backup power supply to deplete.
	3 Disconnect the front impact sensor connector, JB93.
	4 Reconnect the battery negative terminal.
	5 Turn the ignition switch to the **ON** position.
	6 Measure the voltage between JB93, pin 02 (W) and GROUND.
	Is the voltage less than 4 volts? **Yes** GO to F2. **No** GO to F3.
F2: CHECK THE FRONT IMPACT SENSOR SUPPLY CIRCUIT FOR OPEN CIRCUIT	
	1 Turn the ignition switch to the **OFF** position.
	2 Disconnect the battery negative terminal.
	3 Disconnect the RCM connector, For vehicles with 2.0L engine; ● CA165. For vehicles with 2.5/3.0L engine; ● CA450.
	4 Measure the resistance between JB93, pin 02 (W) and the RCM connector, pin 19 (W).
	Is the resistance greater than 5 ohms? **Yes** REPAIR the high resistance circuit. For additional information, refer to the wiring diagrams. Clear the DTC, test the system for normal operation. **No** GO to F3.
F3: CHECK THE FRONT IMPACT SENSOR RETURN CIRCUIT FOR OPEN CIRCUIT	
	1 Measure the resistance between JB93, pin 01 (N) and the RCM connector, pin 20 (N).
	Is the resistance greater than 5 ohms? **Yes** REPAIR the high resistance circuit. For additional information, refer to the wiring diagrams. Clear the DTC, test the system for normal operation. **No** INSTALL a new front impact sensor, REFER to: Crash Sensor. Clear the DTC, test the system for normal operation. If the fault persists, install a new RCM. REFER to: Restraints Control Module (RCM) (501-20B Supplemental Restraint System, Removal and Installation). Clear the DTC, test the system for normal operation.

PINPOINT TEST G : B2296 (FLASH CODE 43): FRONT DRIVER SIDE IMPACT SENSOR CIRCUIT STATUS FAULT	
TEST CONDITIONS	**DETAILS/RESULTS/ACTIONS**
G1: CHECK THE POWER SUPPLY TO THE FRONT DRIVER SIDE IMPACT SENSOR	
WARNING: To avoid accidental deployment and possible personal injury, the backup power supply must be depleted before repairing or replacing any air bag SRS components. To deplete the backup power supply energy, disconnect the battery ground cable and wait for one minute. Failure to follow this instruction may result in personal injury.	
	1 Disconnect the battery negative terminal.
	2 Wait one minute for the backup power supply to deplete.
	3 Disconnect the front driver side impact sensor connector, CA215.
	4 Reconnect the battery negative terminal.
	5 Turn the ignition switch to the **ON** position.
	6 Measure the voltage between CA215, pin 02 (W) and GROUND.
	Is the voltage less than 4 volts? **Yes** GO to G2. **No** GO to G3.
G2: CHECK THE FRONT DRIVER SIDE IMPACT SENSOR SUPPLY CIRCUIT FOR OPEN CIRCUIT	
WARNING: To avoid accidental deployment and possible personal injury, the backup power supply must be depleted before repairing or replacing any air bag SRS components. To deplete the backup power supply energy, disconnect the battery ground cable and wait for one minute. Failure to follow this instruction may result in personal injury.	
	1 Turn the ignition switch to the **OFF** position.
	2 Disconnect the battery negative terminal.
	3 Disconnect the RCM connector, For vehicles with 2.0L engine; ● CA165.

	For vehicles with 2.5/3.0L engine; ● CA450.
	4 Measure the resistance between CA215, pin 02 (W) and the RCM connector, pin 27 (W).
	Is the resistance greater than 5 ohms? **Yes** REPAIR the high resistance circuit. For additional information, refer to the wiring diagrams. Clear the DTC, test the system for normal operation. **No** GO to G3.
G3: CHECK THE FRONT DRIVER SIDE IMPACT SENSOR RETURN CIRCUIT FOR OPEN CIRCUIT	
	1 Measure the resistance between CA215, pin 01 (N) and the RCM connector, pin 28 (N).
	Is the resistance greater than 5 ohms? **Yes** REPAIR the high resistance circuit. For additional information, refer to the wiring diagrams. Clear the DTC, test the system for normal operation. **No** INSTALL a new front driver side impact sensor, REFER to: Side Impact Sensor (501-20B Supplemental Restraint System, Removal and Installation). Clear the DTC, test the system for normal operation. If the fault persists, install a new RCM. REFER to: Restraints Control Module (RCM) (501-20B Supplemental Restraint System, Removal and Installation). Clear the DTC, test the system for normal operation.

PINPOINT TEST H : B2296 (FLASH CODE 44): FRONT PASSENGER SIDE IMPACT SENSOR CIRCUIT STATUS FAULT	
TEST CONDITIONS	**DETAILS/RESULTS/ACTIONS**
H1: CHECK THE POWER SUPPLY TO THE FRONT PASSENGER SIDE IMPACT SENSOR	
WARNING: To avoid accidental deployment and possible personal injury, the backup power supply must be depleted before repairing or replacing any air bag SRS components. To deplete the backup power supply energy, disconnect the battery ground cable and wait for one minute. Failure to follow this instruction may result in personal injury.	
	1 Disconnect the battery negative terminal.
	2 Wait one minute for the backup power supply to deplete.
	3 Disconnect the front passenger side impact sensor connector, CA216.
	4 Reconnect the battery negative terminal.
	5 Turn the ignition switch to the **ON** position.
	6 Measure the voltage between CA216, pin 02 (W) and GROUND.
	Is the voltage less than 4 volts? **Yes** GO to H2. **No** GO to H3.
H2: CHECK THE FRONT PASSENGER SIDE IMPACT SENSOR SUPPLY CIRCUIT FOR OPEN CIRCUIT	
WARNING: To avoid accidental deployment and possible personal injury, the backup power supply must be depleted before repairing or replacing any air bag SRS components. To deplete the backup power supply energy, disconnect the battery ground cable and wait for one minute. Failure to follow this instruction may result in personal injury.	
	1 Turn the ignition switch to the **OFF** position.
	2 Disconnect the battery negative terminal.
	3 Disconnect the RCM connector, For vehicles with 2.0L engine; ● CA165. For vehicles with 2.5/3.0L engine; ● CA450.
	4 Measure the resistance between CA216, pin 02 (W) and the RCM connector, pin 29 (W).
	Is the resistance greater than 5 ohms? **Yes** REPAIR the high resistance circuit. For additional information, refer to the wiring diagrams. Clear the DTC, test the system for normal operation. **No** GO to H3.
H3: CHECK THE FRONT PASSENGER SIDE IMPACT SENSOR RETURN CIRCUIT FOR OPEN CIRCUIT	
	1 Measure the resistance between CA216, pin 01 (N) and the RCM connector, pin 30 (N).
	Is the resistance greater than 5 ohms? **Yes** REPAIR the high resistance circuit. For additional information, refer to the wiring diagrams. Clear the DTC, test the system for normal operation. **No** INSTALL a new front passenger side impact sensor, REFER to: Side Impact Sensor (501-20B Supplemental Restraint System, Removal and Installation). Clear the DTC, test the system for normal operation. If the fault persists, install a new RCM. REFER to: Restraints Control Module (RCM) (501-20B Supplemental Restraint System, Removal and Installation). Clear the DTC, test the system for normal operation.

PINPOINT TEST I : B2296 (FLASH CODE 45): REAR DRIVER SIDE IMPACT SENSOR CIRCUIT STATUS FAULT	
TEST CONDITIONS	**DETAILS/RESULTS/ACTIONS**
I1: CHECK THE POWER SUPPLY TO THE REAR DRIVER SIDE IMPACT SENSOR	

WARNING: To avoid accidental deployment and possible personal injury, the backup power supply must be depleted before repairing or replacing any air bag SRS components. To deplete the backup power supply energy, disconnect the battery ground cable and wait for one minute. Failure to follow this instruction may result in personal injury.

	1 Disconnect the battery negative terminal.
	2 Wait one minute for the backup power supply to deplete.
	3 Disconnect the rear driver side impact sensor connector, CA140.
	4 Reconnect the battery negative terminal.
	5 Turn the ignition switch to the **ON** position.
	6 Measure the voltage between CA140, pin 02 (W) and GROUND.
	Is the voltage less than 4 volts? **Yes** GO to I2. **No** GO to I3.

I2: CHECK THE REAR DRIVER SIDE IMPACT SENSOR SUPPLY CIRCUIT FOR OPEN CIRCUIT

WARNING: To avoid accidental deployment and possible personal injury, the backup power supply must be depleted before repairing or replacing any air bag SRS components. To deplete the backup power supply energy, disconnect the battery ground cable and wait for one minute. Failure to follow this instruction may result in personal injury.

	1 Turn the ignition switch to the **OFF** position.
	2 Disconnect the battery negative terminal.
	3 Disconnect the RCM connector, For vehicles with 2.0L engine; ● CA165. For vehicles with 2.5/3.0L engine; ● CA450.
	4 Measure the resistance between CA140, pin 02 (W) and the RCM connector, pin 13 (W).
	Is the resistance greater than 5 ohms? **Yes** REPAIR the high resistance circuit. For additional information, refer to the wiring diagrams. Clear the DTC, test the system for normal operation. **No** GO to I3.

I3: CHECK THE REAR DRIVER SIDE IMPACT SENSOR RETURN CIRCUIT FOR OPEN CIRCUIT

	1 Measure the resistance between CA140, pin 01 (N) and the RCM connector, pin 14 (N).
	Is the resistance greater than 5 ohms? **Yes** REPAIR the high resistance circuit. For additional information, refer to the wiring diagrams. Clear the DTC, test the system for normal operation. **No** INSTALL a new rear driver side impact sensor, REFER to: Side Impact Sensor (501-20B Supplemental Restraint System, Removal and Installation). Clear the DTC, test the system for normal operation. If the fault persists, install a new RCM. REFER to: Restraints Control Module (RCM) (501-20B Supplemental Restraint System, Removal and Installation). Clear the DTC, test the system for normal operation.

PINPOINT TEST J : B2296 (FLASH CODE 46): REAR PASSENGER SIDE IMPACT SENSOR CIRCUIT STATUS FAULT

TEST CONDITIONS	DETAILS/RESULTS/ACTIONS

J1: CHECK THE POWER SUPPLY TO THE REAR PASSENGER SIDE IMPACT SENSOR

WARNING: To avoid accidental deployment and possible personal injury, the backup power supply must be depleted before repairing or replacing any air bag SRS components. To deplete the backup power supply energy, disconnect the battery ground cable and wait for one minute. Failure to follow this instruction may result in personal injury.

	1 Disconnect the battery negative terminal.
	2 Wait one minute for the backup power supply to deplete.
	3 Disconnect the rear passenger side impact sensor connector, CA131.
	4 Reconnect the battery negative terminal.
	5 Turn the ignition switch to the **ON** position.
	6 Measure the voltage between CA131, pin 02 (W) and GROUND.
	Is the voltage less than 4 volts? **Yes** GO to J2. **No** GO to J3.

J2: CHECK THE REAR PASSENGER SIDE IMPACT SENSOR SUPPLY CIRCUIT FOR OPEN CIRCUIT

WARNING: To avoid accidental deployment and possible personal injury, the backup power supply must be depleted before repairing or replacing any air bag SRS components. To deplete the backup power supply energy, disconnect the battery ground cable and wait for one minute. Failure to follow this instruction may result in personal injury.

	1 Turn the ignition switch to the **OFF** position.
	2 Disconnect the battery negative terminal.
	3 Disconnect the RCM connector, For vehicles with 2.0L engine; ● CA165. For vehicles with 2.5/3.0L engine; ● CA450.

PINPOINT TEST K : B2988, B2989, B2990, B2991 (FLASH CODE 28): KNEE BOLSTER CIRCUIT OPEN/SHORT CIRCUIT

WARNING: **DO NOT** attempt to measure the resistance across the airbag module. Failure to follow this instruction may result in personal injury.

TEST CONDITIONS	DETAILS/RESULTS/ACTIONS

K1: CHECK THE KNEE BOLSTER AIRBAG CIRCUIT STATUS WITH A SIMULATOR IN PLACE

WARNING: To avoid accidental deployment and possible personal injury, the backup power supply must be depleted before repairing or replacing any air bag SRS components. To deplete the backup power supply energy, disconnect the battery ground cable and wait for one minute. Failure to follow this instruction may result in personal injury.

	1 Disconnect the battery negative terminal.
	2 Wait one minute for the backup power supply to deplete.
	3 Disconnect the knee bolster connector, CA420.
	4 Connect the simulator in place of the airbag module.
	5 Reconnect the battery negative terminal.
	6 Clear the DTC.
	7 Turn the ignition switch to the **ON** position.
	8 Recheck the DTCs and flash codes.
	Are there any DTCs and/or flash codes set with the simulators in place? **Yes** GO to K2. **No** INSTALL a new knee bolster airbag module, REFER to: Driver Lower Air Bag Module (501-20B Supplemental Restraint System, Removal and Installation).

K2: CHECK THE KNEE BOLSTER AIRBAG MODULE SUPPLY CIRCUIT FOR OPEN CIRCUIT

WARNING: To avoid accidental deployment and possible personal injury, the backup power supply must be depleted before repairing or replacing any air bag SRS components. To deplete the backup power supply energy, disconnect the battery ground cable and wait for one minute. Failure to follow this instruction may result in personal injury.

	1 Disconnect the battery negative terminal.
	2 Wait one minute for the backup power supply to deplete.
	3 Disconnect the simulator from the knee bolster connector, CA420.
	4 Disconnect the RCM connector, For vehicles with 2.0L engine; ● CA165. For vehicles with 2.5/3.0L engine; ● CA450.
	5 Measure the resistance between CA420, pin 01 (RW) and the RCM connector, pin 07 (RW).
	Is the resistance greater than 5 ohms? **Yes** REPAIR the high resistance circuit. For additional information, refer to the wiring diagrams. CLEAR the DTC, test the system for normal operation. **No** GO to K3.

K3: CHECK THE KNEE BOLSTER AIRBAG MODULE SUPPLY CIRCUIT FOR SHORT CIRCUIT TO BATTERY

	1 Measure the resistance between CA420, pin 01 (RW) and the battery positive terminal.
	Is the resistance less than 10,000 ohms? **Yes** REPAIR the short circuit. For additional information, refer to the wiring diagrams. CLEAR the DTC, test the system for normal operation. **No** GO to K4.

K4: CHECK THE KNEE BOLSTER AIRBAG MODULE SUPPLY CIRCUIT FOR SHORT CIRCUIT TO GROUND

	1 Measure the resistance between CA420, pin 01 (RW) and GROUND.
	Is the resistance less than 10,000 ohms? **Yes** REPAIR the short circuit. For additional information, refer to the wiring diagrams. CLEAR the DTC, test the system for normal operation. **No** INSTALL a new knee bolster airbag module, REFER to: Driver Lower Air Bag Module (501-20B Supplemental Restraint System, Removal and Installation).

PINPOINT TEST L : C1947 (FLASH CODE 49): DRIVER SEAT TRACK POSITION SENSOR CIRCUIT FAULT

• NOTE: Check the seat track position sensor for correct fitment before beginning pinpoint tests.

TEST CONDITIONS	DETAILS/RESULTS/ACTIONS

L1: CHECK THE DRIVER SEAT TRACK POSITION SENSOR SUPPLY CIRCUIT FOR HIGH RESISTANCE

WARNING: To avoid accidental deployment and possible personal injury, the backup power supply must be depleted before repairing or replacing any air bag SRS components. To deplete the backup power supply energy, disconnect the battery ground cable and wait for one minute. Failure to follow this instruction may result in personal injury.

	1 Disconnect the battery negative terminal.
	2 Wait one minute for the backup power supply to deplete.
	3 Disconnect the driver seat track sensor connector, CA65.
	4 Disconnect the RCM connector, For vehicles with 2.0L engine; ● CA165. For vehicles with 2.5/3.0L engine; ● CA450.
	5 Measure the resistance between CA65, pin 20 (U) and the RCM connector, pin 23 (U).
	Is the resistance greater than 5 ohms? **Yes** REPAIR the high resistance circuit. For additional information, refer to the wiring diagrams. Clear the DTC, test the system for normal operation.

	No GO to L2.
L2: CHECK THE DRIVER SEAT TRACK POSITION SENSOR SUPPLY CIRCUIT FOR SHORT CIRCUIT TO BATTERY	
	1 Measure the resistance between CA65, pin 20 (U) and the battery positive terminal.
	Is the resistance less than 10,000 ohms? **Yes** REPAIR the short circuit. For additional information, refer to the wiring diagrams. Clear the DTC, test the system for normal operation. **No** GO to L3.
L3: CHECK THE DRIVER SEAT TRACK POSITION SENSOR SUPPLY CIRCUIT FOR SHORT CIRCUIT TO GROUND	
	1 Measure the resistance between CA65, pin 20 (U) and GROUND.
	Is the resistance less than 10,000 ohms? **Yes** REPAIR the short circuit. For additional information, refer to the wiring diagrams. Clear the DTC, test the system for normal operation. **No** GO to L4.
L4: CHECK THE DRIVER SEAT TRACK POSITION SENSOR GROUND CIRCUIT FOR HIGH RESISTANCE	
	1 Measure the resistance between CA65, pin 19 (B) and GROUND.
	Is the resistance greater than 5 ohms? **Yes** REPAIR the high resistance circuit. For additional information, refer to the wiring diagrams. Clear the DTC, test the system for normal operation. **No** GO to L5.
L5: CHECK THE DRIVER SEAT TRACK POSITION SENSOR GROUND CIRCUIT FOR SHORT CIRCUIT TO BATTERY	
	1 Measure the resistance between CA65, pin 19 (B) and the battery positive terminal.
	Is the resistance less than 10,000 ohms? **Yes** REPAIR the short circuit. For additional information, refer to the wiring diagrams. Clear the DTC, test the system for normal operation. **No** INSTALL a new driver seat track position sensor. REFER to: Seat Position Sensor (501-20B Supplemental Restraint System, Removal and Installation). Clear the DTC, test the system for normal operation. If the DTC is repeated, install a new RCM, REFER to: Restraints Control Module (RCM) (501-20B Supplemental Restraint System, Removal and Installation).

PINPOINT TEST M : C2200 (FLASH CODE 48): PASSENGER SEAT TRACK POSITION SENSOR CIRCUIT FAULT	
• NOTE: Check the seat track position sensor for correct fitment before beginning pinpoint tests.	
TEST CONDITIONS	**DETAILS/RESULTS/ACTIONS**
M1: CHECK THE PASSENGER SEAT TRACK POSITION SENSOR SUPPLY CIRCUIT FOR HIGH RESISTANCE	
WARNING: To avoid accidental deployment and possible personal injury, the backup power supply must be depleted before repairing or replacing any air bag SRS components. To deplete the backup power supply energy, disconnect the battery ground cable and wait for one minute. Failure to follow this instruction may result in personal injury.	
	1 Disconnect the battery negative terminal.
	2 Wait one minute for the backup power supply to deplete.
	3 Disconnect the passenger seat track sensor connector, CA70.
	4 Disconnect the RCM connector, For vehicles with 2.0L engine; • CA165. For vehicles with 2.5/3.0L engine; • CA450.
	5 Measure the resistance between CA70, pin 20 (U) and the RCM connector, pin 24 (U).
	Is the resistance greater than 5 ohms? **Yes** REPAIR the high resistance circuit. For additional information, refer to the wiring diagrams. Clear the DTC, test the system for normal operation. **No** GO to M2.
M2: CHECK THE PASSENGER SEAT TRACK POSITION SENSOR SUPPLY CIRCUIT FOR SHORT CIRCUIT TO BATTERY	
	1 Measure the resistance between CA70, pin 20 (U) and the battery positive terminal.
	Is the resistance less than 10,000 ohms? **Yes** REPAIR the short circuit. For additional information, refer to the wiring diagrams. Clear the DTC, test the system for normal operation. **No** GO to M3.
M3: CHECK THE PASSENGER SEAT TRACK POSITION SENSOR SUPPLY CIRCUIT FOR SHORT CIRCUIT TO GROUND	
	1 Measure the resistance between CA70, pin 20 (U) and GROUND.
	Is the resistance less than 10,000 ohms? **Yes** REPAIR the short circuit. For additional information, refer to the wiring diagrams. Clear the DTC, test the system for normal operation. **No** GO to M4.
M4: CHECK THE PASSENGER SEAT TRACK POSITION SENSOR GROUND CIRCUIT FOR HIGH RESISTANCE	
	1 Measure the resistance between CA70, pin 19 (B) and GROUND.

	Is the resistance greater than 5 ohms? **Yes** REPAIR the high resistance circuit. For additional information, refer to the wiring diagrams. Clear the DTC, test the system for normal operation. **No** GO to M5.
M5: CHECK THE PASSENGER SEAT TRACK POSITION SENSOR GROUND CIRCUIT FOR SHORT CIRCUIT TO BATTERY	
	1 Measure the resistance between CA70, pin 19 (B) and the battery positive terminal.
	Is the resistance less than 10,000 ohms? **Yes** REPAIR the short circuit. For additional information, refer to the wiring diagrams. Clear the DTC, test the system for normal operation. **No** INSTALL a new passenger seat track position sensor. REFER to: Seat Position Sensor (501-20B Supplemental Restraint System, Removal and Installation). Clear the DTC, test the system for normal operation. If the DTC is repeated, install a new RCM, REFER to: Restraints Control Module (RCM) (501-20B Supplemental Restraint System, Removal and Installation).

PINPOINT TEST N : B2290 (FLASH CODE 16): OCCUPANT CLASSIFICATION SENSOR (OCS) SYSTEM FAULT

• NOTE: Refer to the preliminary inspection table for fuse checks, etc before beginning pinpoint tests.

• NOTE: For belt tension sensor to OCS circuit tests,
REFER to: Safety Belt System (501-20A Safety Belt System, Diagnosis and Testing).

TEST CONDITIONS	DETAILS/RESULTS/ACTIONS
N1: CHECK THE POWER SUPPLY TO THE OCS	
WARNING: To avoid accidental deployment and possible personal injury, the backup power supply must be depleted before repairing or replacing any air bag SRS components. To deplete the backup power supply energy, disconnect the battery ground cable and wait for one minute. Failure to follow this instruction may result in personal injury.	
	1 Disconnect the battery negative terminal.
	2 Wait one minute for the backup power supply to deplete.
	3 Disconnect the OCS connector, WS17.
	4 Turn the ignition switch to the **ON** position.
	5 Measure the voltage between WS17, pin G (GR) and GROUND.
	Is the voltage less than 10 volts? **Yes** REPAIR the circuit between the OCS and battery. For additional information, refer to the wiring diagrams. CLEAR the DTC, test the system for normal operation. **No** GO to N2.
N2: CHECK THE GEOUND TO THE OCS	
	1 Measure the resistance between WS17, pin D and GROUND.
	Is the resistance greater than 5 ohms? **Yes** REPAIR the high resistance circuit. For additional information, refer to the wiring diagrams. CLEAR the DTC, test the system for normal operation. **No** GO to N3.
N3: CHECK THE SIGNAL CIRCUIT BETWEEN THE OCS AND THE SEAT TRANSDUCER FOR HIGH RESISTANCE	
	1 Disconnect the seat transducer connector, WS20.
	2 Measure the resistance between WS17, pin K (U) and WS20, pin 02 (U).
	Is the resistance greater than 5 ohms? **Yes** REPAIR the high resistance circuit. For additional information, refer to the wiring diagrams. CLEAR the DTC, test the system for normal operation. **No** GO to N4.
N4: CHECK THE SIGNAL CIRCUIT BETWEEN THE OCS AND THE SEAT TRANSDUCER FOR SHORT CIRCUIT TO BATTERY	
	1 Measure the resistance between WS17, pin K (U) and the battery positive terminal.
	Is the resistance less than 10,000 ohms? **Yes** REPAIR the short circuit. For additional information, refer to the wiring diagrams. CLEAR the DTC, test the system for normal operation. **No** GO to N5.
N5: CHECK THE SIGNAL CIRCUIT BETWEEN THE OCS AND THE SEAT TRANSDUCER FOR SHORT CIRCUIT TO GROUND	
	1 Measure the resistance between WS17, pin K (U) and GROUND.
	Is the resistance less than 10,000 ohms? **Yes** REPAIR the short circuit. For additional information, refer to the wiring diagrams. CLEAR the DTC, test the system for normal operation. **No** GO to N6.
N6: CHECK THE 5V CIRCUIT BETWEEN THE OCS AND THE SEAT TRANSDUCER FOR HIGH RESISTANCE	
	1 Measure the resistance between WS17, pin J (W) and WS20, pin 01 (W).
	Is the resistance greater than 5 ohms? **Yes** REPAIR the high resistance circuit. For additional information, refer to the wiring diagrams. CLEAR the DTC, test the system for normal operation. **No** GO to N7.
N7: CHECK THE 5V CIRCUIT BETWEEN THE OCS AND THE SEAT TRANSDUCER FOR SHORT CIRCUIT TO BATTERY	
	1 Measure the resistance between WS17, pin J (W) and the battery positive terminal.
	Is the resistance less than 10,000 ohms? **Yes** REPAIR the short circuit. For additional information, refer to the wiring diagrams. CLEAR the DTC, test the system for normal operation.

	No GO to N8.
N8: CHECK THE 5V CIRCUIT BETWEEN THE OCS AND THE SEAT TRANSDUCER FOR SHORT CIRCUIT TO GROUND	
	1 Measure the resistance between WS17, pin J (W) and GROUND.
	Is the resistance less than 10,000 ohms? **Yes** REPAIR the short circuit. For additional information, refer to the wiring diagrams. CLEAR the DTC, test the system for normal operation. **No** GO to N9.
N9: CHECK THE GROUND CIRCUIT BETWEEN THE OCS AND THE SEAT TRANSDUCER FOR HIGH RESISTANCE	
	1 Measure the resistance between WS17, pin H (R) and WS20, pin 03 (R).
	Is the resistance greater than 5 ohms? **Yes** REPAIR the high resistance circuit. For additional information, refer to the wiring diagrams. CLEAR the DTC, test the system for normal operation. **No** GO to N10.
N10: CHECK THE GROUND CIRCUIT BETWEEN THE OCS AND THE SEAT TRANSDUCER FOR SHORT CIRCUIT TO BATTERY	
	1 Measure the resistance between WS17, pin H (R) and the battery positive terminal.
	Is the resistance less than 10,000 ohms? **Yes** REPAIR the short circuit. For additional information, refer to the wiring diagrams. CLEAR the DTC, test the system for normal operation. **No** GO to N11.
N11: CHECK THE GROUND CIRCUIT BETWEEN THE OCS AND THE SEAT TRANSDUCER FOR SHORT CIRCUIT TO GROUND	
	1 Measure the resistance between WS17, pin H (R) and GROUND.
	Is the resistance less than 10,000 ohms? **Yes** REPAIR the short circuit. For additional information, refer to the wiring diagrams. CLEAR the DTC, test the system for normal operation. **No** GO to N12.
N12: CHECK THE CONTROLLER AREA NETWORK + CIRCUIT BETWEEN THE RCM AND THE OCS FOR HIGH RESISTANCE	
	1 Disconnect the RCM connector, For vehicles with 2.0L engine; ● CA165. For vehicles with 2.5/3.0L engine; ● CA450.
	2 Measure the resistance between the RCM connector, pin 17 (O) and WS17, pin E (O).
	Is the resistance greater than 5 ohms? **Yes** REPAIR the high resistance circuit. For additional information, refer to the wiring diagrams. CLEAR the DTC, test the system for normal operation. **No** GO to N13.
N13: CHECK THE CONTROLLER AREA NETWORK - CIRCUIT BETWEEN THE RCM AND THE OCS FOR HIGH RESISTANCE	
	1 Measure the resistance between the RCM connector, pin 18 (U) and WS17, pin F (U).
	Is the resistance greater than 5 ohms? **Yes** REPAIR the high resistance circuit. For additional information, refer to the wiring diagrams. CLEAR the DTC, test the system for normal operation. **No** For more detailed CAN circuit tests, REFER to: Communications Network - VIN Range: E96603->J28492 (418-00 Module Communications Network, Diagnosis and Testing).

www.JagDocs.com

Supplemental Restraint System - Air Bag Disposal

General Procedures

Deployed Air Bag

1. WARNING: Always wear safety glasses when repairing an air bag supplemental restraint system (SRS) vehicle and when handling an air bag module. Failure to follow this instruction may result in personal injury.

Deployed air bag modules are to be disposed of as special waste and must comply with local environmental requirements, if in doubt, contact Authority for disposal requirements.

2. NOTE: The storage, transportation, disposal, and/or recycling of air bag module components must be carried out in accordance with all applicable federal, state and local regulations including, but not limited to, those governing building and fire codes, environmental protection, occupational health and safety, and transportation.

Modules removed and deployed by Jaguar service are to be returned to the importer for disposal.

Undeployed Air Bag — Inoperative

1. WARNINGS:

Carry a live air bag module with the air bag and trim cover or deployment door pointed away from your body. This will reduce the risk of injury in the event of an accidental deployment. Failure to follow this instruction may result in personal injury.

All inoperative air bag modules have been placed on the Mandatory Return List. All discolored or damaged air bag modules must be treated the same as any inoperative live air bag being returned. Failure to follow this instruction may result in personal injury.

Remove the inoperative driver air bag module or passenger air bag module. For additional information see Driver Air Bag Module or Passenger Air Bag Module in this section.

Undeployed Air Bag — Scrapped Vehicle

Remote Deployment

1. WARNINGS:

Always wear safety glasses when repairing an air bag supplemental restraint system (SRS) vehicle and when handling an air bag module. Failure to follow this instruction may result in personal injury.

Carry a live air bag module with the air bag and trim cover or deployment door pointed away from your body. This will reduce the risk of injury in the event of an accidental deployment. Failure to follow this instruction may result in personal injury.

Remote deployment is to be carried out outdoors with all personnel at least 6.1 meters (20 feet) away to ensure personal safety. Due to the loud report which occurs when the air bag is deployed, hearing protection is required. Failure to follow this instruction may result in personal injury.

Do not place the driver or passenger air bag module with the trim cover or deployment door facing down, as the forces of the deploying air bag can cause it to ricochet and cause personal injury. Failure to follow this instruction may result in personal injury.

Equipment required: Universal deployment tool-Part N° 418-S135 and 12V Battery.

2. The deployment procedure should be carried out outdoors away from other personnel.

3. Remove any loose debris from around air bag. Make sure that no flammable liquids are present.

4. Disconnect the battery ground and positive cables.

5. Disconnect the relevant air bag module electrical connector.

6. Connect the appropriate adaptor lead to the restraint device.

7. Connect the deployment lead to the adaptor lead. Pass wire of the deployment tool through window, close all doors, leave window with lead for deployment tool open.

8. WARNING: Before proceeding, make sure precautions have been taken to warn personnel of a possible loud noise upon activation. Do not allow anybody to approach closer to restraint device than six meters. Failure to follow this instruction may result in personal injury.

   Move as far from restraint device as possible and connect the tool clips to a 12V vehicle battery.

9. WARNING: Do not handle the deployed device immediately after activation - it may be hot. Allow the unit to cool for at least 20 minutes. Cooling modules should be continuously monitored to make sure heat does not create a fire with spilled liquids or other debris. Failure to follow this instruction may result in personal injury.

   Deploy the module by depressing both switches on the tool. If activation does not occur, disconnect battery from tool and seek advise from Jaguar Engineering and wait for further instructions.

10. Repeat procedure for all air bags in vehicle.

11. The vehicle is now to be scrapped in the normal manner with modules installed.

Disposal of live air bag modules for driver air bag module, passenger air bag module and side air bag module, using tyres

1. Equipment required: Deployment tool 418-S135, Battery (12V), Safety goggles to BS2092 grade 2, Rubber gloves to PrEN 374 class 2, Ear protectors that have been measured to BS.EN 24869, Particulate respirator to EN 149 grade FFP2S.

2. The deployment procedure should be carried out outdoors, away from other personnel.

3. Stack four scrap tyres, securing together with heavy gauge wire or cable. While disconnected from any electrical power source, connect deployment harness and place air bag adaptor portion under tyre stack, ready for connection to air bag.

4. WARNING: Power must not be connected during this step. Failure to follow this instruction may result in personal injury.

   CAUTION: Make sure the connector is not in contact with the inflator or it will be damaged during the test.

   Connect air bag to air bag connector, make sure the locking sleeve is fully engaged. Position the air bag with the cover facing upwards.

5. Make sure battery connections of deployment harness are ten meters away from the tyre stack

6. Remove any loose parts from around the air bag. Make sure that no flammable liquids are present.

7. WARNING: Before proceeding, make sure precautions have been taken to warn personnel of a possible loud noise upon activation. Do not allow anybody to approach closer to restraint device than six meters. Failure to follow this instruction may result in personal injury.

   Move as far from restraint device as possible and connect the tool clips to a 12V vehicle battery.

8. WARNING: Do not handle the deployed device immediately after activation - it may be hot. Allow the unit to cool for at least 20 minutes. Cooling modules should be continuously monitored to make sure heat does not create a fire with spilled liquids or other debris. Failure to follow this instruction may result in personal injury.

   Deploy the module by depressing both switches on the tool. If activation does not occur, disconnect battery from tool and seek advise from Jaguar Engineering and wait for further instructions.

9. Allow the air bag to cool for at least 20 minutes. Cooling modules should be continuously monitored to make sure heat does not generate a fire with spilled liquids or other debris.

10. Remove the air bag from the tyre stack and seal in a plastic bag, ready for disposal.

11. In the event of any problems or queries arising from this procedure, contact Jaguar Engineering.

Disposal of side curtain air bag module using tyres

1. Equipment required: Deployment tool 418-S135, Battery (12V), Safety goggles to BS2092 grade 2, Rubber gloves to PrEN 374 class 2, Ear protectors that have been measured to BS.EN 24869, Particulate respirator to EN 149 grade FFP2S.

2. The deployment procedure should be carried out outdoors, away from other personnel.

3. WARNING: Make sure that the tyre stack is stable before and after deployment. Failure to follow this instruction my result in personal injury.

Stack scrap tyres of a sufficient height to mask the side curtain air bag module, securing together with heavy gauge wire or cable. While disconnected from any electrical power source, connect deployment harness and place air bag adaptor portion under tyre stack, ready for connection to air bag.

4. WARNING: Power must not be connected during this step. Failure to follow this instruction may result in personal injury.

CAUTION: Make sure the connector is not in contact with the inflator or it will be damaged during the test.

Connect air bag to air bag connector, make sure the locking sleeve is fully engaged. Position the air bag into the tyres with the inflator canister at the lowest point.

5. Make sure battery connections of deployment harness are ten meters away from the tyre stack

6. Remove any loose parts from around the air bag. Make sure that no flammable liquids are present.

7. WARNING: Before proceeding, make sure precautions have been taken to warn personnel of a possible loud noise upon activation. Do not allow anybody to approach closer to restraint device than six meters. Failure to follow this instruction may result in personal injury.

Move as far from restraint device as possible and connect the tool clips to a 12V vehicle battery.

8. WARNING: Do not handle the deployed device immediately after activation - it may be hot. Allow the unit to cool for at least 20 minutes. Cooling modules should be continuously monitored to make sure heat does not create a fire with spilled liquids or other debris. Failure to follow this instruction may result in personal injury.

Deploy the module by depressing both switches on the tool. If activation does not occur, disconnect battery from tool and seek advise from Jaguar Engineering and wait for further instructions.

9. Allow the air bag to cool for at least 20 minutes. Cooling modules should be continuously monitored to make sure heat does not generate a fire with spilled liquids or other debris.

10. Remove the air bag from the tyre stack and seal in a plastic bag, ready for disposal.

11. In the event of any problems or queries arising from this procedure, contact Jaguar Engineering.

Supplemental Restraint System - Clockspring

Removal and Installation

Removal

1. WARNINGS:

Always wear safety glasses when repairing an air bag supplemental restraints system (SRS) vehicle and when handling an air bag module.

Carry a live air bag module with the air bag and trim cover pointed away from your body. This will reduce the risk of injury in the event of an accidental deployment. Failure to follow this instruction may result in personal injury.

Do not set a live air bag module down with the trim cover face down. Failure to follow this instruction may result in personal injury.

After deployment, the air bag surface can contain deposits of sodium hydroxide, a product of the gas generant combustion that is irritating to the skin. Wash your hands with soap and water afterwards. Failure to follow this instruction may result in personal injury.

Never probe the connectors on the air bag module. Doing so may result in air bag deployment, which may result in personal injury. Failure to follow this instruction may result in personal injury.

Air bag modules with discolored or damaged trim covers must be replaced, not repainted.

Vehicle sensor orientation is critical for correct system operation. If a vehicle equipped with an air bag SRS is involved in a collision, inspect the sensor mounting bracket and wiring pigtail for deformation. If damaged, replace the sensor whether or not the air bag is deployed.

To avoid accidental deployment and possible personal injury, the backup power supply must be depleted before repairing or replacing any air bag SRS components. To deplete the backup power supply energy, disconnect the battery ground cable and wait one minute. Failure to follow this instruction may result in personal injury.

• NOTE: Repair is made by replacement only. If a part is replaced and the new part does not correct the condition, install the original part and carry out the diagnostic procedure again.

• NOTE: Make sure the front wheels are in the straight-ahead position.

Remove the steering wheel. For additional information, refer to Section 211-04 Steering Column.

2. Remove the steering column lower shroud.

1. Remove the steering column lower shroud retaining screws.
2. Remove the ignition lock cylinder grommet.
3. Remove the steering column lower shroud.

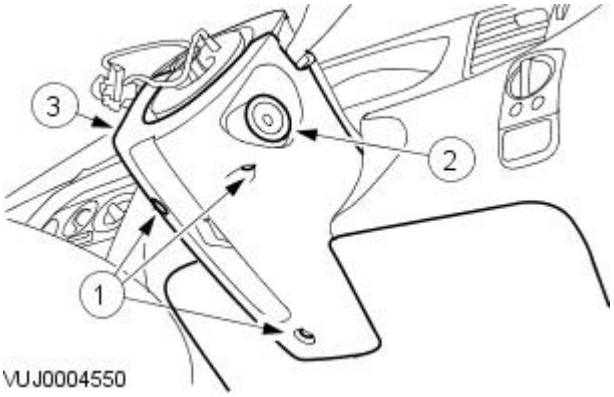

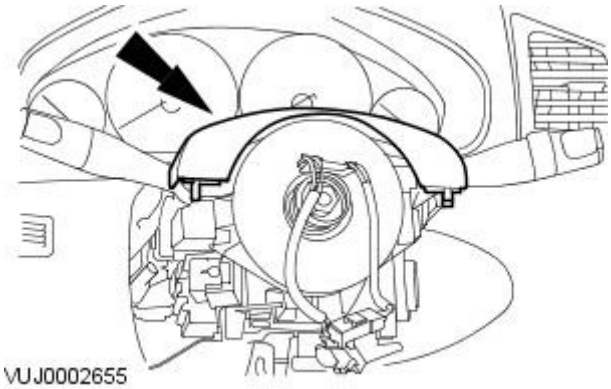

3. Remove the steering column upper shroud.

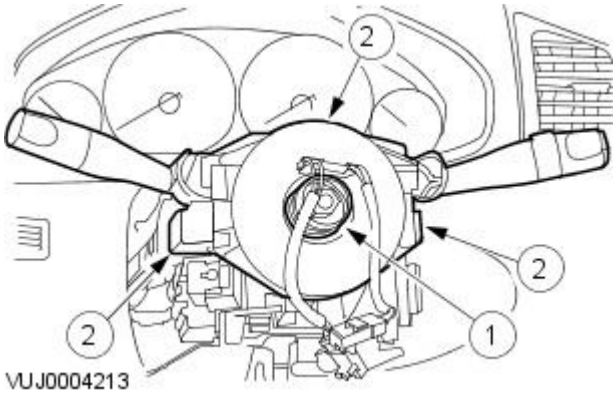

4. Disconnect the multifunction switch electrical connectors.

1. Remove the multifunction switch spring.
2. Disconnect the multifunction switch electrical connectors.

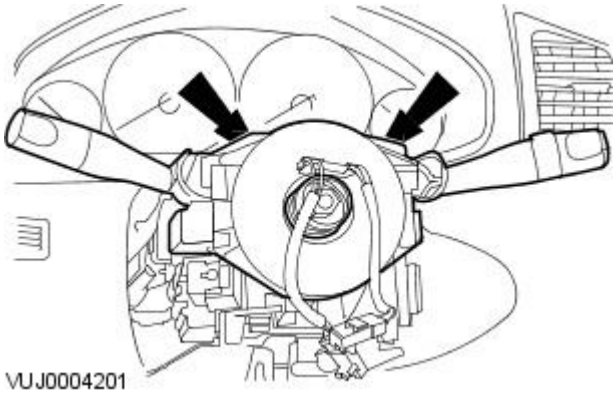

5. Remove the multifunction switches.

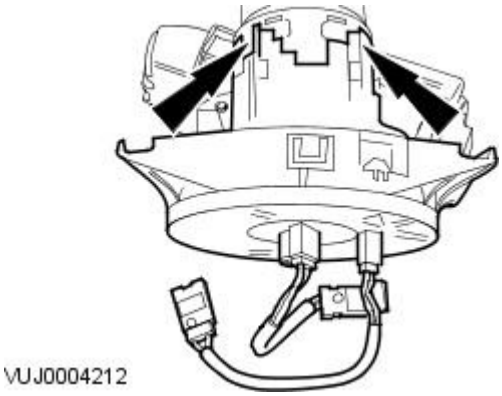

6. Remove the air bag sliding contact.

- Release the retaining tangs.

Installation

1. WARNINGS:

Always wear safety glasses when repairing an air bag supplemental restraints system (SRS) vehicle and when handling an air bag module.

Carry a live air bag module with the air bag and trim cover pointed away from your body. This will reduce the risk of injury in the event of an accidental deployment. Failure to follow this instruction may result in personal injury.

Never probe the connectors on the air bag module. Doing so may result in air bag deployment. Failure to follow this instruction may result in

personal injury.

• NOTE: A repair is made by replacement only. If a part is replaced and the new part does not correct the condition, install the original part and carry out the diagnostic procedure again.

• NOTE: The air bag sliding contact has a service lock that prevents rotation of the air bag sliding contact when the steering wheel is removed.

• NOTE: Make sure the front wheels are in the straight-ahead position.

• NOTE: Make sure to tighten the retaining bolts to the correct specification.

To install, reverse the removal procedure.

Supplemental Restraint System - Crash Sensor

Removal and Installation

Removal

1. WARNINGS:

To avoid accidental deployment and possible personal injury, the backup power supply must be depleted before repairing or replacing any air bag or any other supplemental restraints system (SRS) components. To deplete the backup power supply energy, disconnect the battery ground cable and wait one minute. Failure to follow this instruction may result in personal injury.

Never probe the electrical connectors of air bag modules or any other SRS component. Failure to follow this instruction may result in personal injury.

• NOTE: Repair is made by replacement only. If a part is replaced and the new part does not correct the condition, install the original part and carry out the diagnostic procedure again.

Disconnect the battery ground cable. For additional information, refer to Section 414-01 Battery, Mounting and Cables.

2. Remove the hood latch bracket retaining bolts.

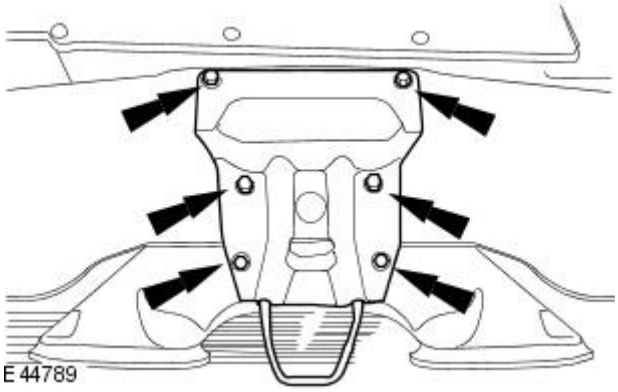

3. Disconnect the crash sensor electrical connector.

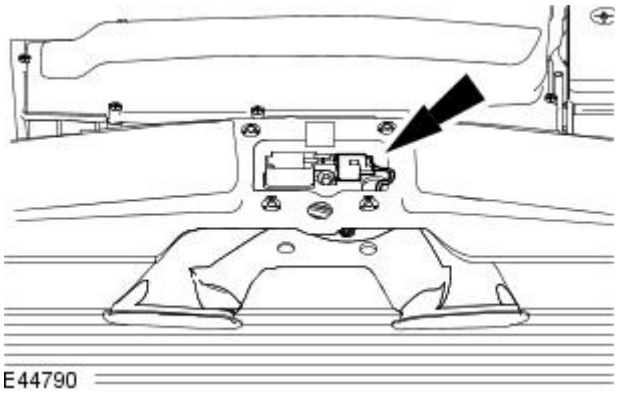

4. Remove the crash sensor.

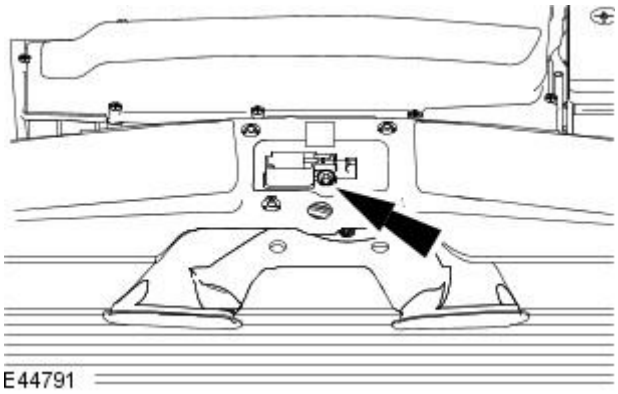

Installation

• WARNINGS:

Make sure the crash sensor locating tang is correctly located. Failure to follow this instruction may result in personal injury.

Never probe the electrical connectors of air bag modules or any other supplemental restraint system (SRS) component. Failure to follow this instruction may result in personal injury.

• NOTE: Repair is made by replacement only. If a part is replaced and the new part does not correct the condition, install the original part and carry out the diagnostic procedure again.

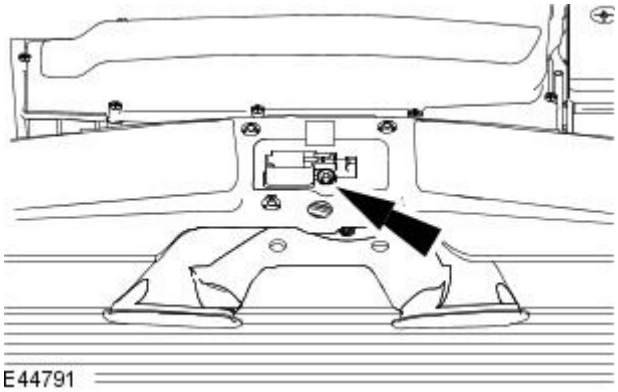

1. Install the crash sensor.

- Tighten to 12 Nm.

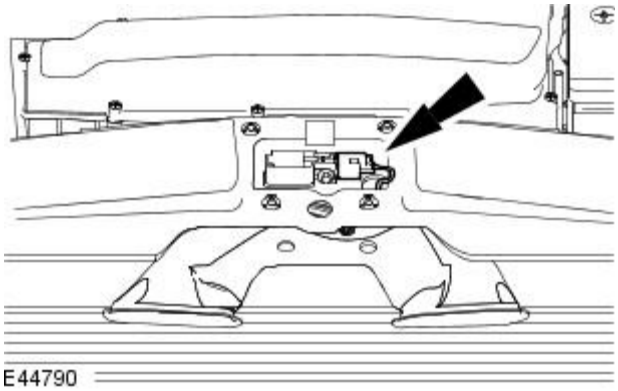

2. Connect the crash sensor electrical connector.

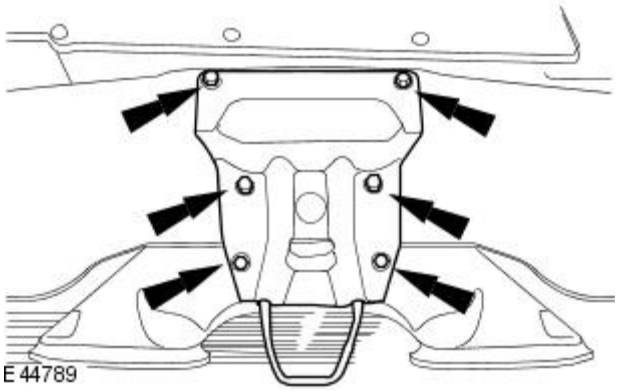

3. Tighten the hood latch bracket retaining bolts.

Supplemental Restraint System - Driver Air Bag Module

Removal and Installation

Removal

1. WARNINGS:

An RCM module only requires replacement if the system has incurred five separate deployments. At no time change an RCM for less than five separate deployments.

Always wear safety glasses when repairing an air bag supplemental restraints system (SRS) vehicle and when handling an air bag module. Failure to follow this instruction may result in personal injury.

Carry a live air bag module with the air bag and trim cover pointed away from your body. This will reduce the risk of injury in the event of an accidental deployment. Failure to follow this instruction may result in personal injury.

Do not set a live air bag module down with the trim cover face down. Failure to follow this instruction may result in personal injury.

After deployment, the air bag surface can contain deposits of sodium hydroxide, a product of the gas generant combustion that is irritating to the skin. Wash your hands with soap and water afterwards. Failure to follow this instruction may result in personal injury.

Never probe the connectors on the air bag module. Doing so may result in air bag deployment. Failure to follow this instruction may result in personal injury.

Air bag modules with discolored or damaged trim covers must be replaced.

Vehicle sensor orientation is critical for correct system operation. If a vehicle equipped with an air bag SRS is involved in a collision, inspect the sensor mounting bracket and wiring pigtail for deformation. If damaged, install a new sensor whether or not the air bag is deployed. If the body work is damaged this will have to be addressed.

To avoid accidental deployment and possible personal injury, the backup power supply must be depleted before repairing or replacing any air bag SRS components. To deplete the backup power supply energy, disconnect the battery ground cable and wait one minute. Failure to follow this instruction may result in personal injury.

• NOTE: Repair is made by replacement only. If a part is replaced and the new part does not correct the condition, install the original part and carry out the diagnostic procedure again.

• NOTE: When installing a new air bag module, a prepaid return postcard is provided with the replacement air bag module. The serial number for the new part and the vehicle identification number (VIN) must be recorded and sent to Jaguar Cars Ltd.

Disconnect the battery ground cable.
For additional information, refer to: Battery Disconnect and Connect (414-01 Battery, Mounting and Cables, General Procedures).

2. CAUTION: Make sure the driver air bag module snap fit connectors are released before removing the driver air bag module.

Detach the driver air bag module.

- Using a suitable tool, access the clips from the rear of the steering wheel.
- Rotate the tool and release the three clips.

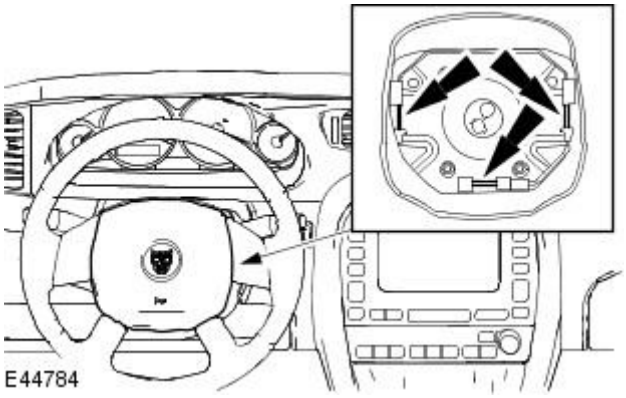

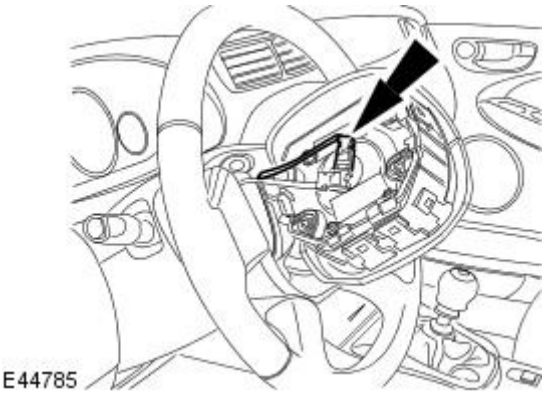

3. Disconnect the driver air bag module electrical connector.

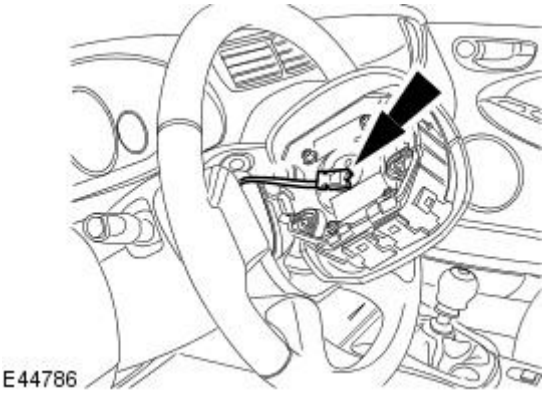

4. Remove the driver air bag module.

- Disconnect the driver air bag module electrical connector.

Installation

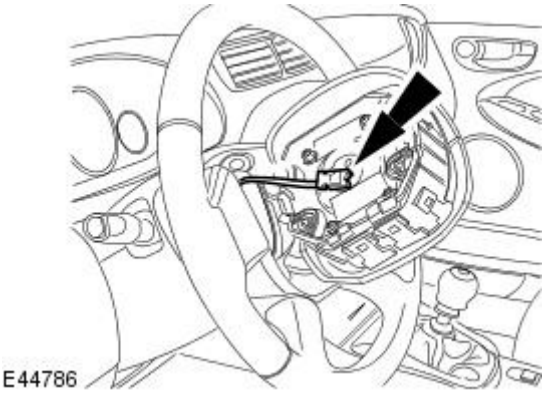

1. WARNINGS:

An RCM module only requires replacement if the system has incurred five separate deployments. At no time change an RCM for less than five separate deployments.

Always wear safety glasses when repairing an air bag supplemental restraints system (SRS) vehicle and when handling an air bag module. Failure to follow this instruction may result in personal injury.

Carry a live air bag module with the air bag and trim cover pointed away from your body. This will reduce the risk of injury in the event of an accidental deployment. Failure to follow this instruction may result in personal injury.

Never probe the connectors on the air bag module. Doing so may result in air bag deployment. Failure to follow this instruction may result in personal injury.

• NOTE: Repair is made by replacement only. If a part is replaced and the new part does not correct the condition , install the original part and carry out the diagnostic procedure again.

• NOTE: When installing a new air bag module, a prepaid return postcard is provided with the replacement air bag module. The serial number for the new part and the vehicle identification number (VIN) must be recorded and sent to Jaguar Cars Ltd.

Connect the driver air bag module electrical connector.

2. Connect the driver air bag module electrical connector.

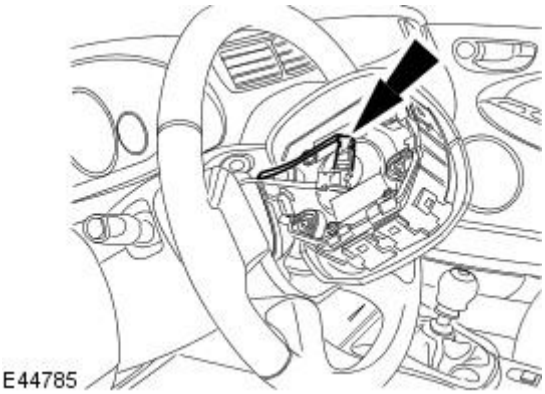

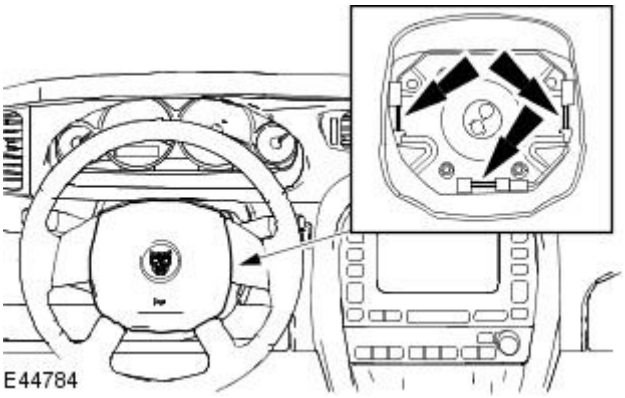

3. NOTE: Make sure the driver air bag module snap fit connectors are fully seated.

Install the driver air bag module.

4. Connect the battery ground cable.
For additional information, refer to: Battery Connect (414-01 Battery, Mounting and Cables, General Procedures).

Supplemental Restraint System - Driver Lower Air Bag Module

Removal and Installation

Removal

1. WARNINGS:

A restraints control (RCM) module only requires replacement if the system has incurred five separate deployments. At no time change an RCM for less than five separate deployments.

Always wear safety glasses when repairing an air bag supplemental restraints system (SRS) and when handling an air bag module. Failure to follow this instruction may result in personal injury.

Carry a live air bag module with the air bag and trim cover pointed away from your body. This will reduce the risk of injury in the event of an accidental deployment. Failure to follow this instruction may result in personal injury.

Do not set a live air bag module down with the trim cover face down. Failure to follow this instruction may result in personal injury.

After deployment, the air bag surface can contain deposits of sodium hydroxide, a product of the gas generant combustion that is irritating to the skin. Wash your hands with soap and water afterwards. Failure to follow this instruction may result in personal injury.

Never probe the connectors on the air bag module. Doing so may result in air bag deployment. Failure to follow this instruction may result in personal injury.

Air bag modules with discolored or damaged trim covers must be replaced.

Vehicle sensor orientation is critical for correct system operation. If a vehicle equipped with an air bag SRS is involved in a collision, inspect the sensor mounting bracket and wiring pigtail for deformation. If damaged, install a new sensor whether or not the air bag is deployed.

To avoid accidental deployment and possible personal injury, the backup power supply must be depleted before repairing or replacing any air bag SRS components. To deplete the backup power supply energy, disconnect the battery ground cable and wait one minute. Failure to follow this instruction may result in personal injury.

• NOTE: Repair is made by replacement only. If a part is replaced and the new part does not correct the condition, install the original part and carry out the diagnostic procedure again.

• NOTE: When installing a new air bag module, a prepaid return postcard is provided with the replacement air bag module. The serial number for the new part and the vehicle identification number (VIN) must be recorded and sent to Jaguar Cars Ltd.

Disconnect the battery ground cable.
For additional information, refer to: Battery Disconnect and Connect (414-01 Battery, Mounting and Cables, General Procedures).

2. Remove the driver lower air bag module retaining screws.

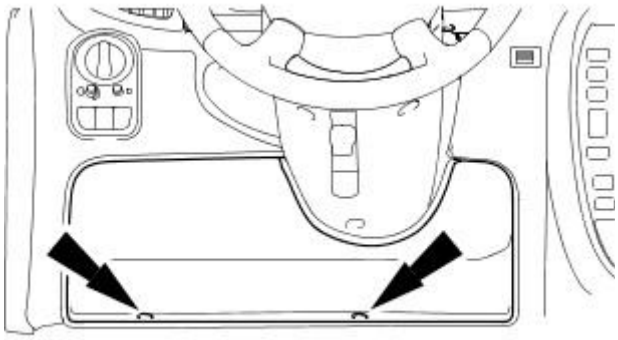

E48461

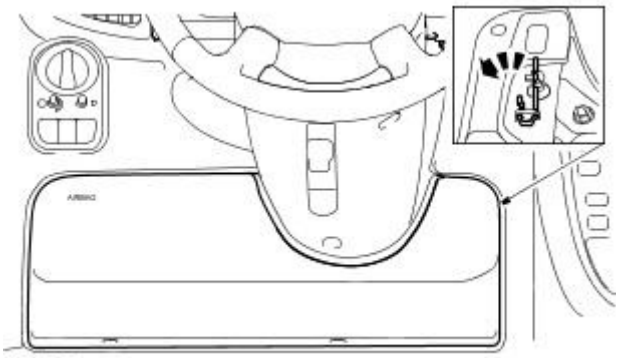
E48462

3. Detach the right-hand driver lower air bag module retaining clip.

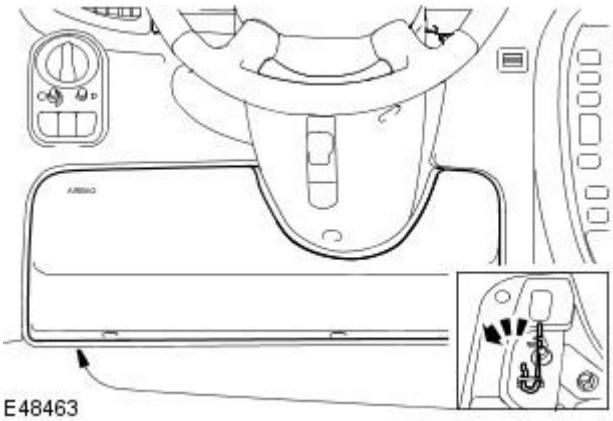
E48463

4. Detach the left-hand driver lower air bag module retaining clip.

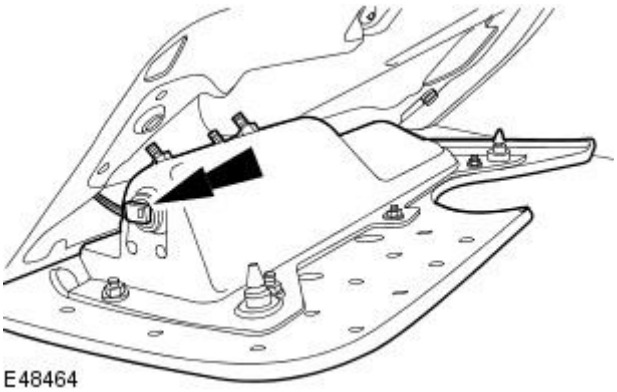
E48464

5. Remove the driver lower air bag module.

- Disconnect the driver lower air bag module electrical connector.

Installation

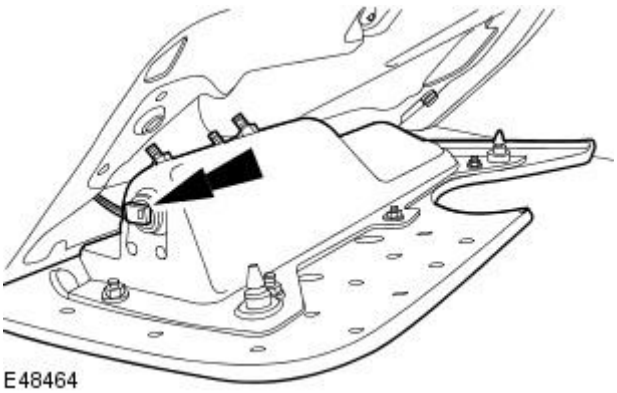
E48464

1. WARNINGS:

An RCM module only requires replacement if the system has incurred five separate deployments. At no time change an RCM for less than five separate deployments.

Always wear safety glasses when repairing an SRS vehicle and when handling an air bag module. Failure to follow this instruction may result in personal injury.

Carry a live air bag module with the air bag and trim cover pointed away from your body. This will reduce the risk of injury in the event of an accidental deployment. Failure to follow this instruction may result in personal injury.

Never probe the connectors on the air bag module. Doing so may result in air bag deployment. Failure to follow this instruction may result in personal injury.

• NOTE: Repair is made by replacement only. If a part is replaced and the new part does not correct the condition , install the original part and carry out the diagnostic procedure again.

• NOTE: When installing a new air bag module, a prepaid return postcard is provided with the replacement air bag module. The serial number for the new part and the vehicle identification number (VIN) must be recorded and sent to Jaguar Cars Ltd.

Connect the driver lower air bag module electrical connector.

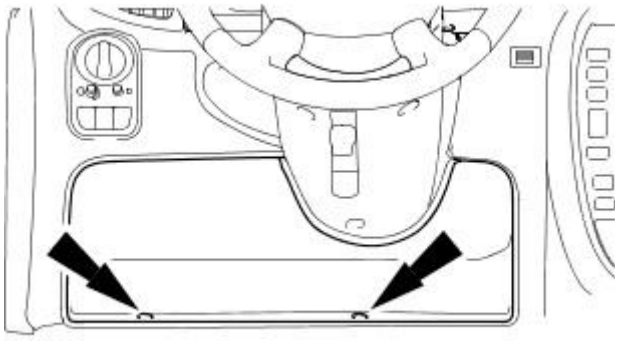

E48461

2. NOTE: Make sure the driver lower air bag module retaining clips are fully seated.

Install the driver lower air bag module.

- Tighten to 11 Nm.

3. Connect the battery ground cable.
For additional information, refer to: Battery Connect (414-01 Battery, Mounting and Cables, General Procedures).

Supplemental Restraint System - Occupant Classification Sensor

Removal and Installation

Removal

1. WARNINGS:

To avoid accidental deployment and possible personal injury, the backup power supply must be depleted before repairing or replacing any air bag supplemental restraint system (SRS) components. To deplete the backup power supply energy, disconnect the battery ground cable and wait one minute. Failure to follow this instruction may result in personal injury.

Never probe the electrical connectors of air bag modules or any other SRS component. Failure to follow this instruction may result in personal injury.

CAUTION: Electronic components in seats are sensitive to impact. Handle seat with care or damage may result.

• NOTE: Repair is made by replacement only. If a part is replaced and the new part does not correct the condition, install the original part and carry out the diagnostic procedure again.

• NOTE: Sensor is available only as a service kit. No attempt should be made to replace individual components.

Power seat base to lowest position. Recline seat back to 25 degrees from vertical.

Remove the passenger seat. For additional information, Section 501-10 Seating.

2. Remove the backrest recliner handwheel (if equipped).

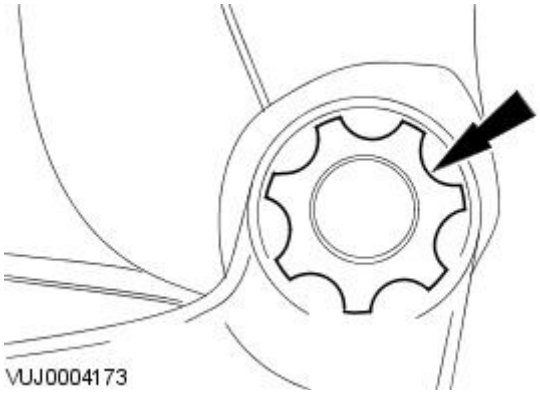

3. Remove the inner side trim panel.

4. Remove the outer side trim panel.

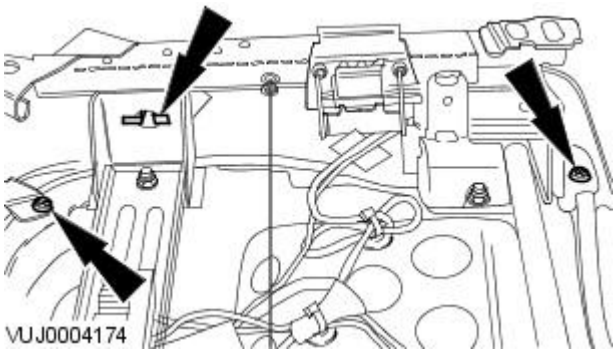

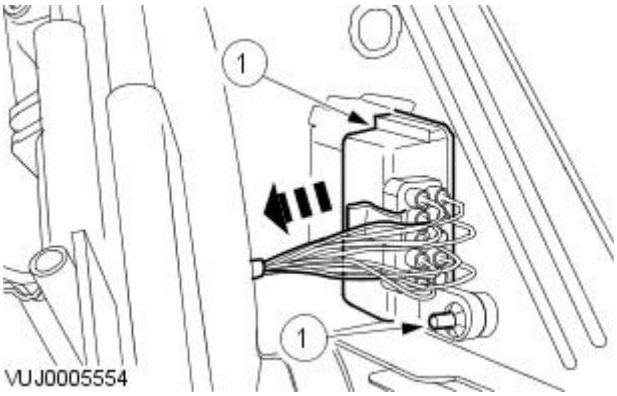

5. Remove the electronic control unit (ECU).

1. Remove the two clips.
1. Remove the ECU.

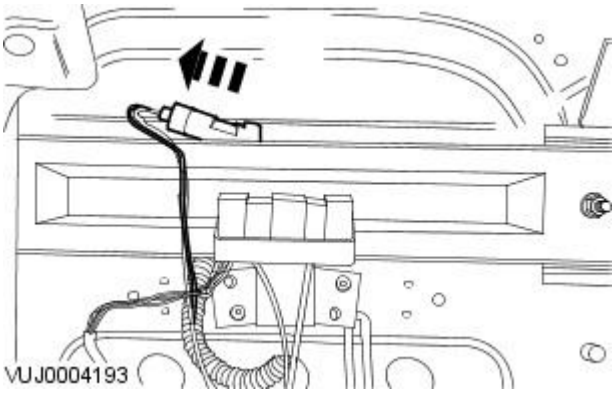

6. Disconnect the electrical connector from the sensor.

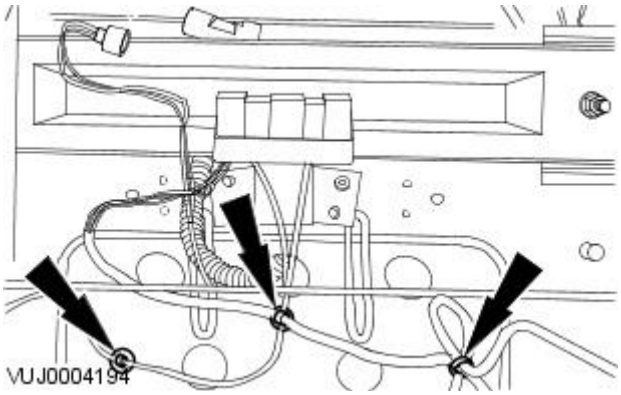

7. Detach the wiring harness from the seat base by cutting and removing the cable ties. If a plastic harness connector plate is fitted to the seat, detach the connectors to free the harness. The plastic carrier plate can then be removed and discarded.

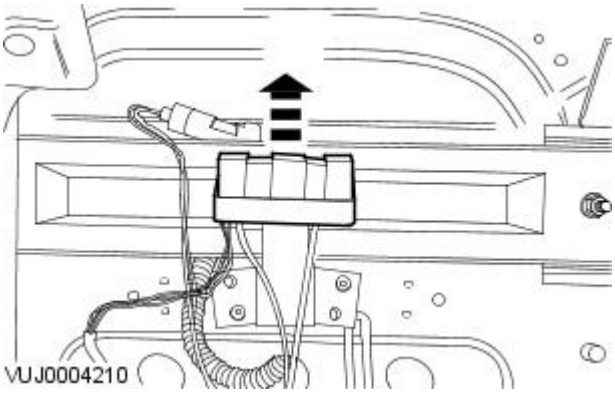

8. Detach the electrical connector from the electrical connector bracket.

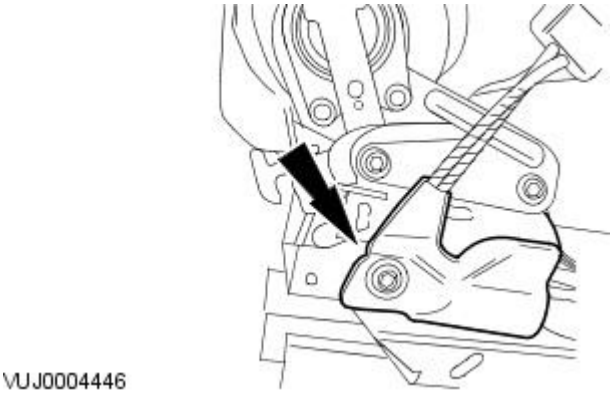

9. Remove the seat buckle.

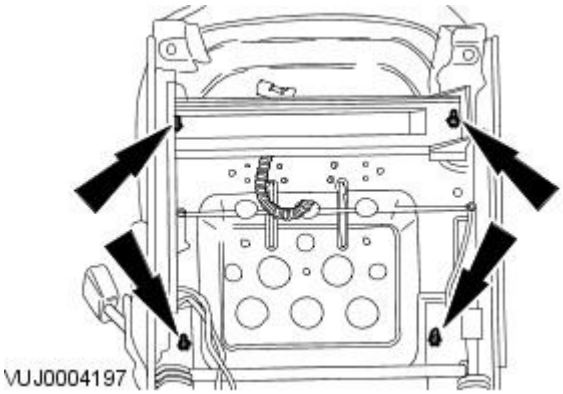

10. Remove the seat base retaining nuts.

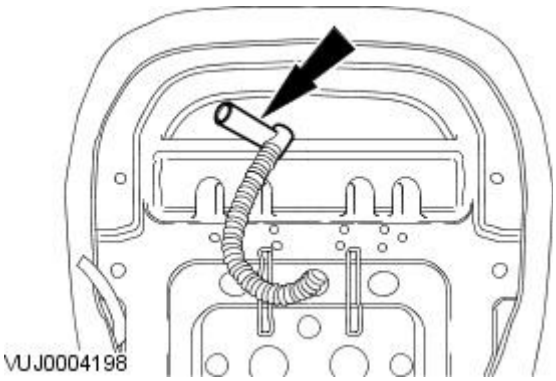

11. Detach the passenger weight sensor electrical connector from the retaining clip.

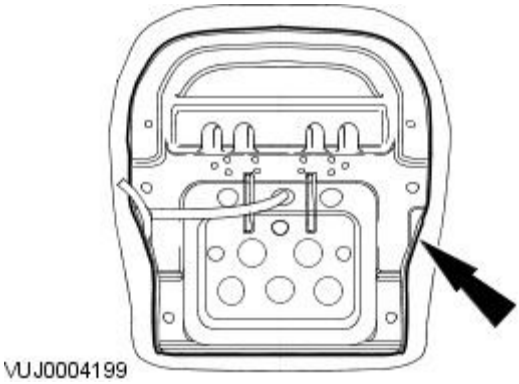

12. Remove the seat cover.

- Unclip the seat cover from the seat base.

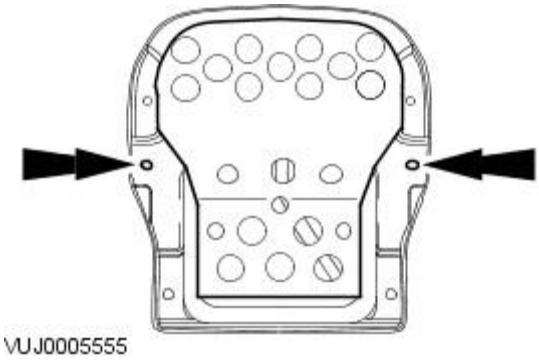

13. Remove the seat cushion bladder from the seat base.

- Remove the two fir tree clips.

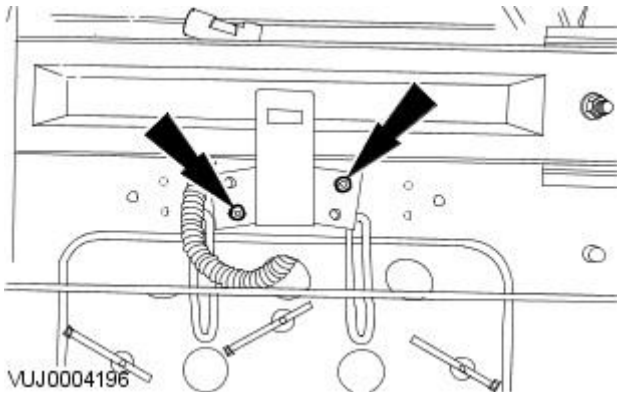

14. CAUTION: Swarf may damage the bladder. Make sure the seat and bladder are free from debris.

Remove the electrical connector bracket.

- Remove and discard the rivets.

Installation

1. NOTE: Once the seat base is fully assembled, using the cable ties supplied with the kit, fully secure the harness to the seat base.

To install, reverse the removal procedure.

Supplemental Restraint System - Passenger Air Bag Deactivation (PAD) Indicator

Removal and Installation

Removal

1. WARNINGS:

To avoid accidental deployment and possible personal injury, the backup power supply must be depleted before repairing or replacing any air bag supplemental restraints system (SRS) components. To deplete the backup power supply energy, disconnect the battery ground cable and wait one minute. Failure to follow this instruction may result in personal injury.

Never probe the electrical connectors of air bag modules or any other supplemental restraint system component. Failure to follow this instruction may result in personal injury.

• NOTE: Repair is made by replacement only. If a part is replaced and the new part does not correct the condition, install the original part and carry out the diagnostic procedure again.

Lower and extend the steering column to its maximum rearward position.

2. Disconnect the battery ground cable.
For additional information, refer to: Battery Disconnect and Connect (414-01 Battery, Mounting and Cables, General Procedures).

3. Remove the instrument cluster and vent finish panel.

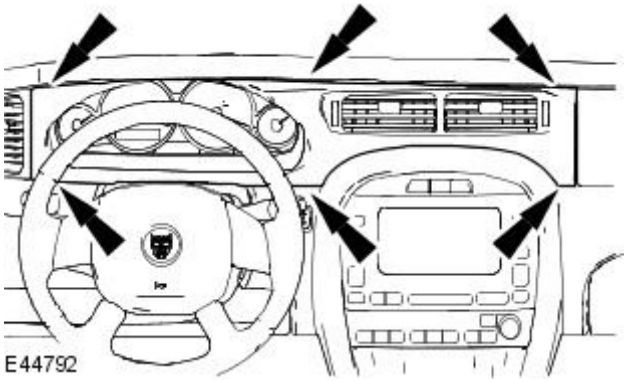

4. Remove the passenger finish panel.

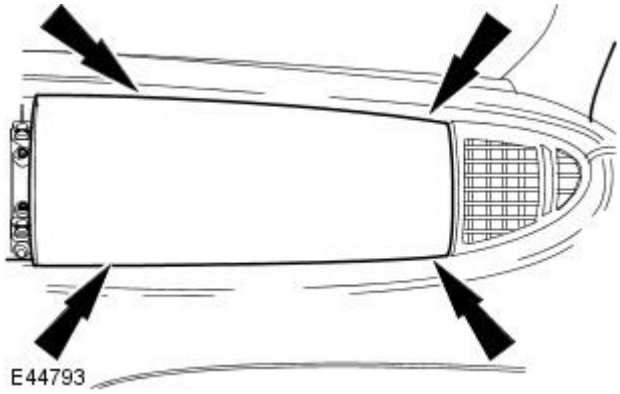

5. Detach the passenger air bag deactivation PAD indicator.

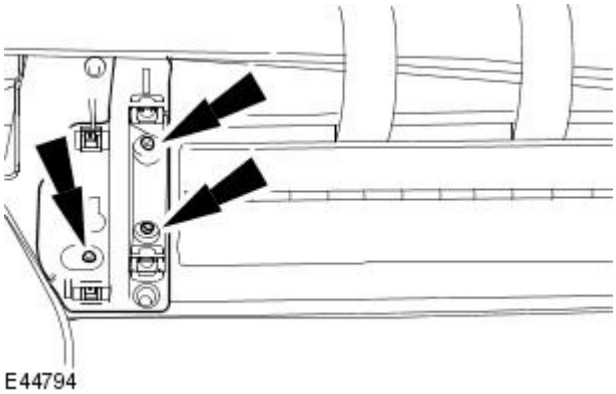

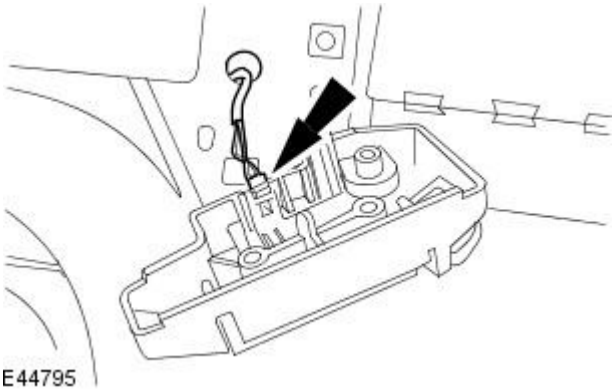

6. Remove the PAD indicator.

- Disconnect the electrical connector.

Installation

1. WARNINGS:

To avoid accidental deployment and possible personal injury, the backup power supply must be depleted before repairing or replacing any air bag supplemental restraints system (SRS) components. To deplete the backup power supply energy, disconnect the battery ground cable and wait one minute. Failure to follow this instruction may result in personal injury.

Never probe the electrical connectors of air bag modules or any other supplemental restraint system component. Failure to follow this instruction may result in personal injury.

• NOTE: Repair is made by replacement only. If a part is replaced and the new part does not correct the condition, install the original part and carry out the diagnostic procedure again.

To install, reverse the removal procedure.

Supplemental Restraint System - Passenger Air Bag Module

Removal and Installation

Removal

1. WARNINGS:

A restraints control module (RCM) only requires replacement if the system has incurred five separate deployments. At no time change an RCM for less than five separate deployments.

Always wear safety glasses when repairing an air bag supplemental restraints system (SRS) vehicle and when handling an air bag module. Failure to follow this instruction may result in personal injury.

Carry a live air bag module with the air bag and trim cover pointed away from your body. This will reduce the risk of injury in the event of an accidental deployment. Failure to follow this instruction may result in personal injury.

Do not set a live air bag module down with the trim cover face down. Failure to follow this instruction may result in personal injury.

After deployment, the air bag surface can contain deposits of sodium hydroxide, a product of the gas generant combustion that is irritating to the skin. Wash your hands with soap and water afterwards. Failure to follow this instruction may result in personal injury.

Never probe the connectors on the air bag module. Doing so may result in air bag deployment. Failure to follow this instruction may result in personal injury.

Air bag modules with discolored or damaged trim covers must be replaced.

Vehicle sensor orientation is critical for correct system operation. If a vehicle equipped with an air bag SRS is involved in a collision, inspect the sensor mounting bracket and wiring pigtail for deformation. If damaged, install a new sensor whether or not the air bag is deployed. If the body work is damaged this will have to be addressed.

To avoid accidental deployment and possible personal injury, the backup power supply must be depleted before repairing or replacing any air bag SRS components. To deplete the backup power supply energy, disconnect the battery ground cable and wait one minute. Failure to follow this instruction may result in personal injury.

• NOTE: Repair is made by replacement only. If a part is replaced and the new part does not correct the condition, install the original part and carry out the diagnostic procedure again.

• NOTE: When installing a new air bag module, a prepaid return postcard is provided with the replacement air bag module. The serial number for the new part and the vehicle identification number (VIN) must be recorded and sent to Jaguar cars ltd.

Disconnect the battery ground cable.
For additional information, refer to: Battery Disconnect and Connect (414-01 Battery, Mounting and Cables, General Procedures).

2. Lower and extend the steering column to its maximum rearward position.

3. Remove the instrument cluster and vent finish panel.

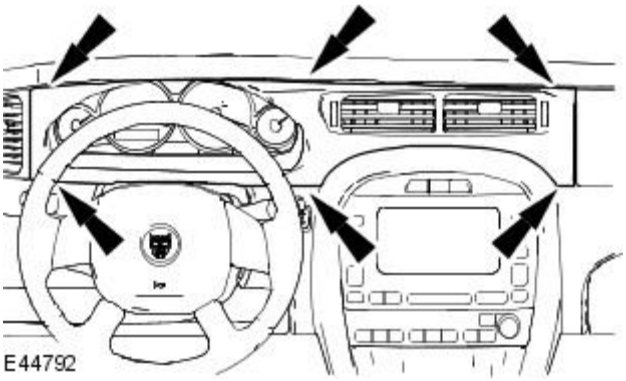

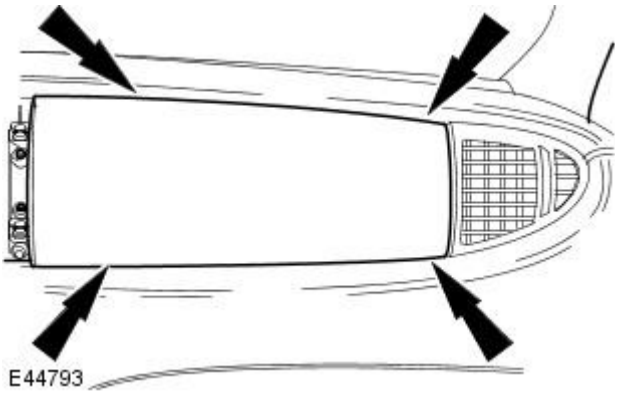

4. Detach the passenger finish panel.

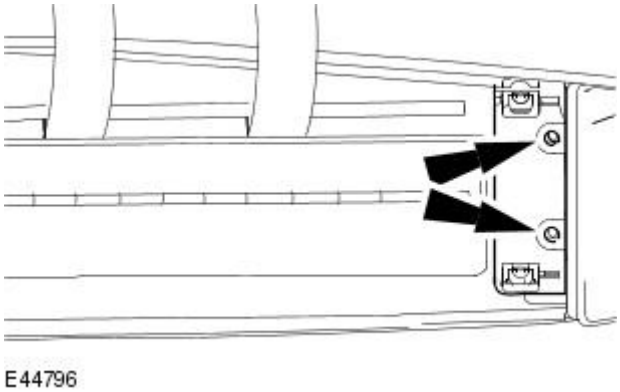

5. Remove the passenger air vent.

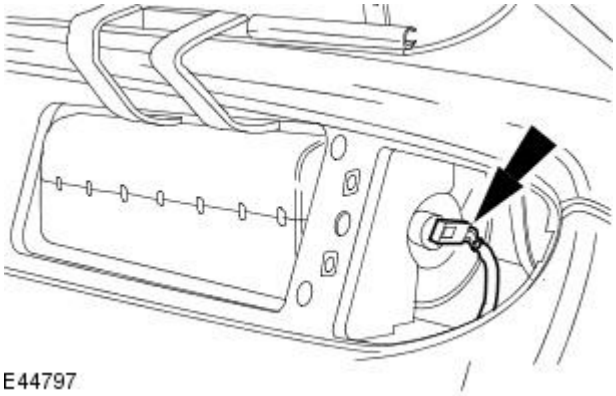

6. WARNING: Disconnect the passenger air bag module right-hand electrical connector before the left-hand electrical connector. Failure to follow these instructions may result in personal injury.

Disconnect the passenger air bag module right-hand electrical connector.

7. WARNING: Make sure the passenger air bag module right-hand electrical connector has been disconnected. Failure to follow this instruction may result in personal injury.

Disconnect the passenger air bag module left-hand electrical connector.

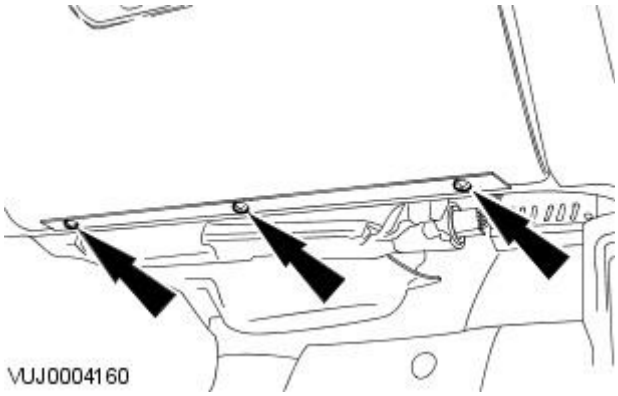

8. Remove the passenger compartment hinge retaining screws.

9. Remove the passenger compartment finisher trim.

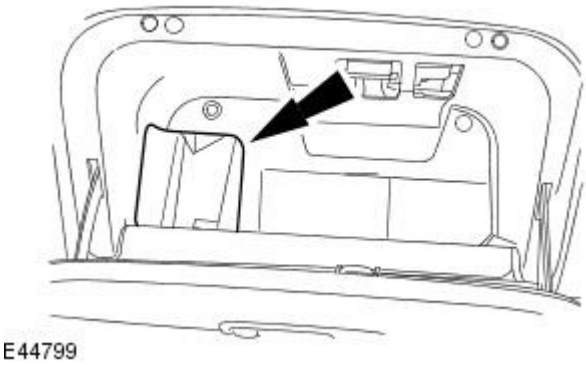

10. Remove the passenger compartment.

- Remove the passenger compartment retaining screws.

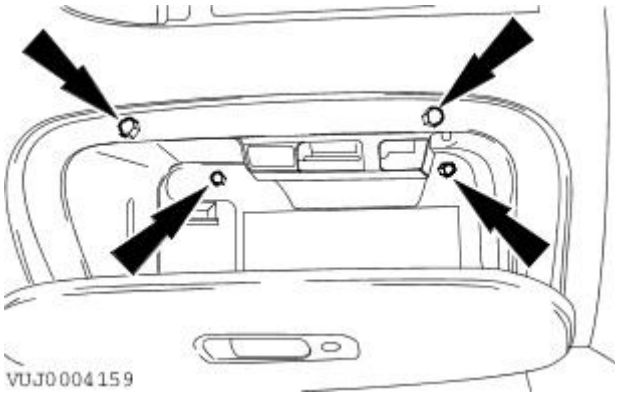

11. Disconnect the passenger compartment lamp electrical connector.

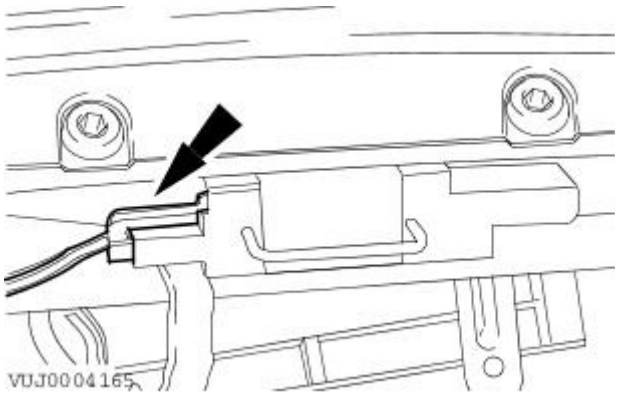

12. NOTE: Under no circumstances should the air bag be removed from the re-action can.

• NOTE: Support the passenger air bag module.

Remove the passenger air bag module.

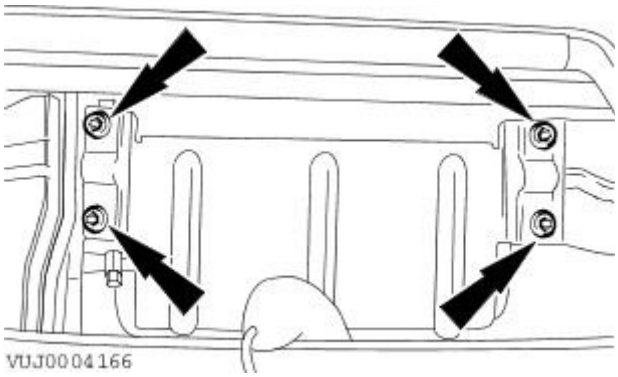

Installation

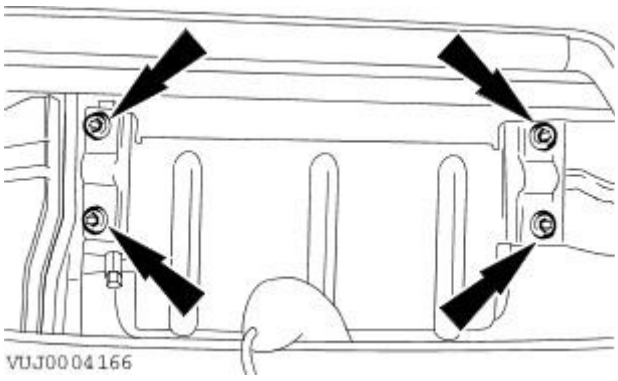

1. WARNINGS:

Make sure the passenger air bag module left-hand electrical connector is connected before the right-hand electrical connector. Failure to follow this instruction may result in personal injury.

A restraints control module (RCM) only requires replacement if the system has incurred five separate deployments. At no time change an RCM for less than five separate deployments.

Always wear safety glasses when repairing an air bag supplemental restraints system (SRS) vehicle and when handling an air bag module. Failure to follow this instruction may result in personal injury.

Carry a live air bag module with the air bag and deployment door pointed away from your body. This will reduce the risk of injury in the event of an accidental deployment.

Never probe the connectors on the air bag module. Doing so may result in air bag deployment. Failure to follow this instruction may result in personal injury.

• NOTE: Repair is made by replacement only. If a part is replaced and the new part does not correct the condition, install the original part and carry out the diagnostic procedure again.

To install, reverse the removal procedure.

- Tighten to 9 Nm.

Supplemental Restraint System - Restraints Control Module (RCM)

Removal and Installation

Removal

1. WARNINGS:

To avoid accidental deployment and possible personal injury, the backup power supply must be depleted before repairing or replacing any air bag SRS components. To deplete the backup power supply energy, disconnect the battery ground cable and wait one minute. Failure to follow this instruction may result in personal injury.

Never probe the connectors on the air bag module. Doing so may result in air bag deployment. Failure to follow this instruction may result in personal injury.

CAUTION: Electronic modules are sensitive to static electrical charges. If exposed to these charges, damage may result.

• NOTE: Repair is made by replacement only. If a part is replaced and the new part does not correct the condition, install the original part and carry out the diagnostic procedure again.

Disconnect the battery ground cable. For additional information, refer to Section 414-01 Battery, Mounting and Cables.

2. Remove the center console. For additional information, refer to Section 501-12 Instrument Panel and Console.

3. Disconnect the RCM electrical connectors.

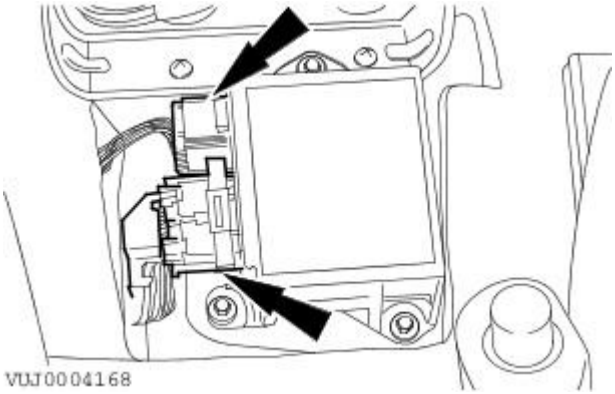

4. Remove the RCM.

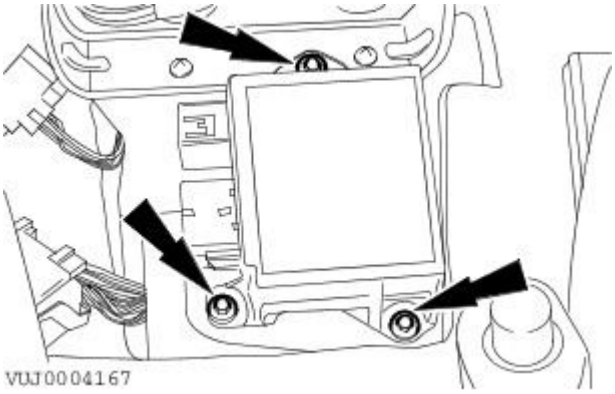

Installation

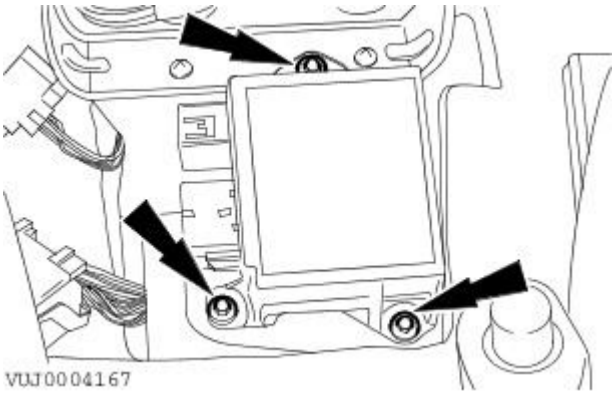

1. WARNINGS:

The tightening torque of the RCM retaining bolts is critical for correct system operation and safety.

Never probe the connectors on the air bag module. Doing so may result in air bag deployment. Failure to follow this instruction may result in personal injury.

• NOTE: Make sure to tighten the retaining bolts to the correct specification.

To install, reverse the removal procedure.

- Tighten to 12 Nm.

Supplemental Restraint System - Seat Position Sensor

Removal and Installation

Removal

1. WARNINGS:

To avoid accidental deployment and possible personal injury, the backup power supply must be depleted before repairing or replacing any air bag SRS components. To deplete the backup power supply energy, disconnect the battery ground cable and wait one minute. Failure to follow this instruction may result in personal injury.

Never probe the electrical connectors of air bag modules or any other supplemental restraint system component. Failure to follow this instruction may result in personal injury.

• NOTE: Repair is made by replacement only. If a part is replaced and the new part does not correct the condition, install the original part and carry out the diagnostic procedure again.

Remove the driver seat. For additional information, refer to Section 501-10 Seating.

2. Disconnect the seat track position sensor electrical connector.

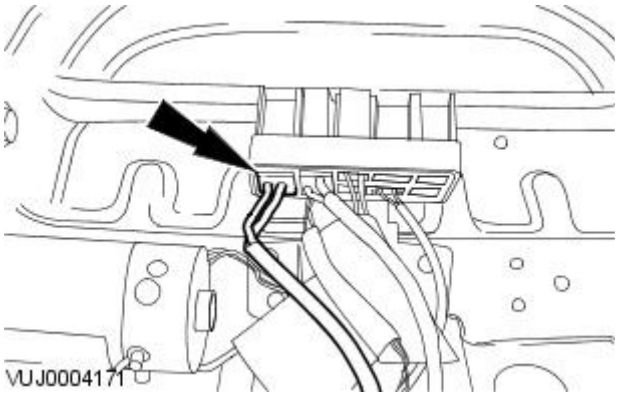

3. Detach the seat track position sensor wiring harness.

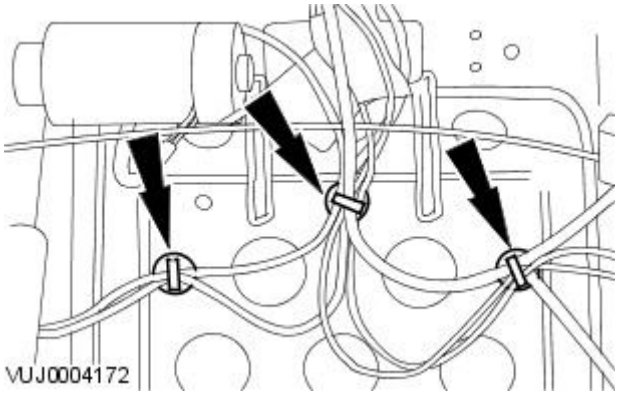

4. Remove the seat track position sensor.

- Remove and discard the rivets.

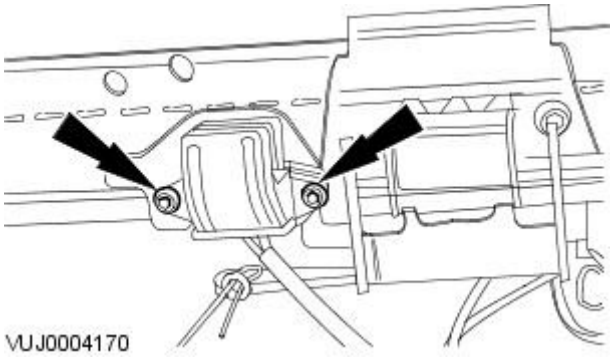

Installation

1. WARNINGS:

To avoid accidental deployment and possible personal injury, the backup power supply must be depleted before repairing or replacing any air bag SRS components. To deplete the backup power supply energy, disconnect the battery ground cable and wait one minute. Failure to follow this instruction may result in personal injury.

Never probe the electrical connectors of air bag modules or any other supplemental restraint system component. Failure to follow this restraint system component. Failure to follow this instruction may result in personal injury.

• NOTE: Repair is made by replacement only. If a part is replaced and the new part does not correct the condition, install the original part and carry out the diagnostic procedure again.

To install, reverse the removal procedure.

Supplemental Restraint System - Side Air Curtain Module4-Door

Removal and Installation

Removal

1. WARNINGS:

A restraint control module (RCM) only requires replacement if the system has incurred five separate deployments. At no time change an RCM for less than five separate deployments.

Always wear safety glasses when repairing an air bag supplemental restraints system (SRS) vehicle and when handling an air bag module. Failure to follow this instruction may result in personal injury.

Carry a live air bag module with the air bag and trim cover pointed away from your body. This will reduce the risk of injury in the event of an accidental deployment. Failure to follow this instruction may result in personal injury.

Do not set a live air bag module down with the trim cover face down. Failure to follow this instruction may result in personal injury.

After deployment, the air bag surface can contain deposits of sodium hydroxide, a product of the gas generant combustion that is irritating to the skin. Wash your hands with soap and water afterwards. Failure to follow this instruction may result in personal injury.

Never probe the connectors on the air bag module. Doing so may result in air bag deployment. Failure to follow this instruction may result in personal injury.

Air bag modules with discolored or damaged trim covers must be replaced.

Vehicle sensor orientation is critical for correct system operation. If a vehicle equipped with an air bag SRS is involved in a collision, inspect the sensor mounting bracket and wiring pigtail for deformation. If damaged, install a new sensor whether or not the air bag is deployed. If the body work is damaged this will have to be addressed.

To avoid accidental deployment and possible personal injury, the backup power supply must be depleted before repairing or replacing any air bag SRS components. To deplete the backup power supply energy, disconnect the battery ground cable and wait one minute. Failure to follow this instruction may result in personal injury.

• NOTE: Repair is made by replacement only. If a part is replaced and the new part does not correct the condition, install the original part and carry out the diagnostic procedure again.

• NOTE: When installing a new air bag module, a prepaid return postcard is provided with the replacement air bag module. The serial number for the new part and the vehicle identification number (VIN) must be recorded and sent to Jaguar Cars Ltd.

Disconnect the battery ground cable. For additional information, refer to Section 414-01 Battery, Mounting and Cables.

2. Remove the headliner. For additional information, refer to Section 501-05 Interior Trim and Ornamentation.

3. NOTE: To aid installation, note the routing of the retaining cord.

Remove the side air curtain module cord retaining bolt.

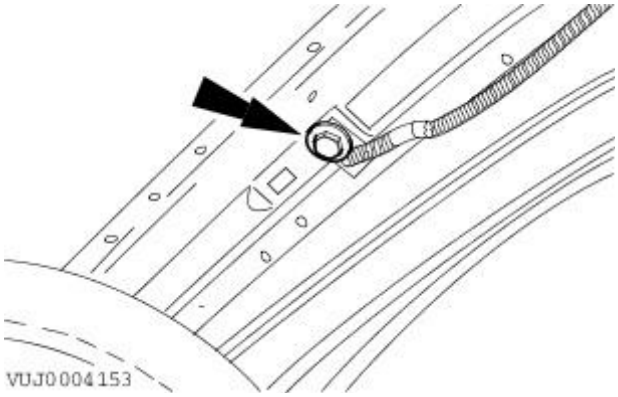

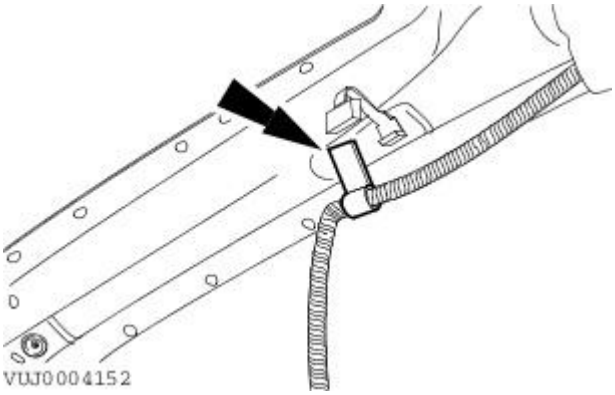

4. NOTE: To aid installation, note the routing of the retaining cord.

Detach the side air curtain module cord from the retaining clip.

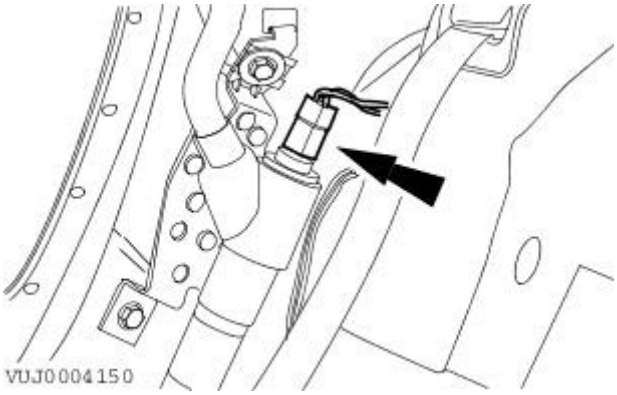

5. Disconnect the side air curtain module electrical connector.

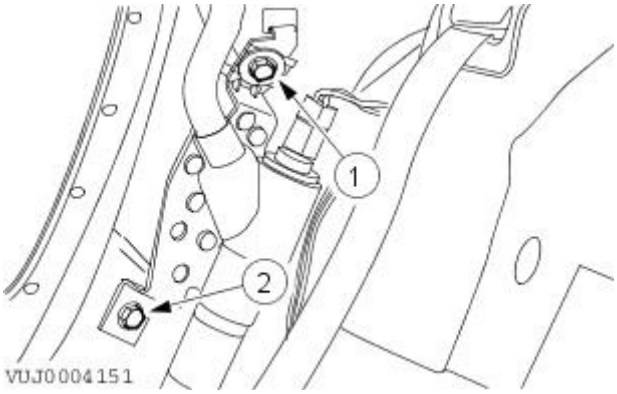

6. NOTE: To aid installation, note the routing of the retaining cord.

Remove the side air curtain module retaining bolts.

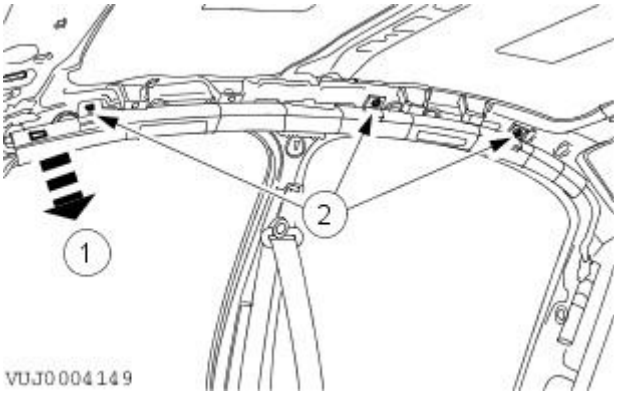

7. NOTE: To aid installation, note the position of the locating tangs.

Remove the side air curtain module.

1. Remove the retaining clip.
2. Remove the retaining bolts.

Installation

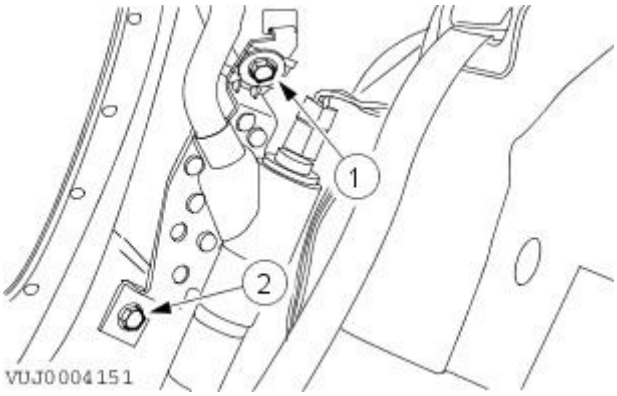

1. WARNINGS:

An restraint control module (RCM) only requires replacement if the system has incurred five separate deployments. At no time change an RCM for less than five separate deployments.

Always wear safety glasses when repairing an air bag supplemental restraints system (SRS) vehicle and when handling an air bag module. Failure to follow this instruction may result in personal injury.

Carry a live air bag module with the air bag and trim cover pointed away from your body. This will reduce the risk of injury in the event of an accidental deployment. Failure to follow this instruction may result in personal injury.

Never probe the connectors on the air bag module. Doing so may result in air bag deployment. Failure to follow this instruction may result in personal injury.

• NOTE: Repair is made by replacement only. If a part is replaced and the new part does not correct the condition, install the original part and carry out the diagnostic procedure again.

• NOTE: Tighten the retaining bolts to the correct specification and in the indicated sequence shown.

• NOTE: Make sure the side air curtain module tang is correctly located.

Install the side air curtain module retaining bolts.

- Tighten to 9 Nm.

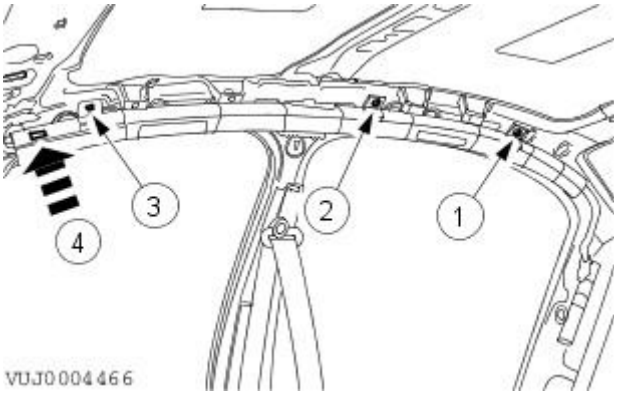

2. Tighten to 9 Nm.

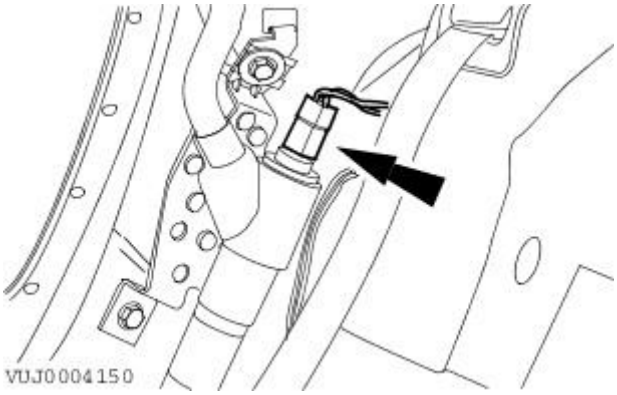

3. Connect the side air curtain module electrical connector.

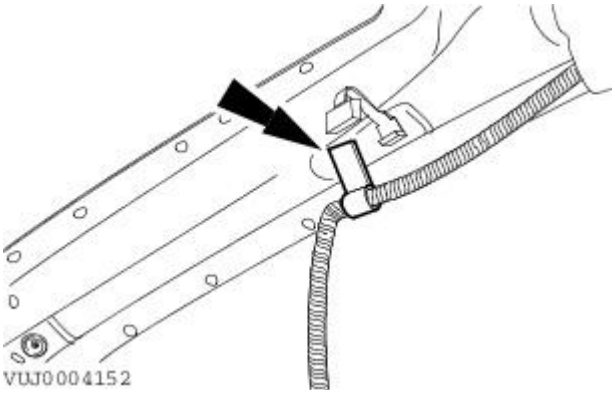

4. Attach the side air curtain module cord.

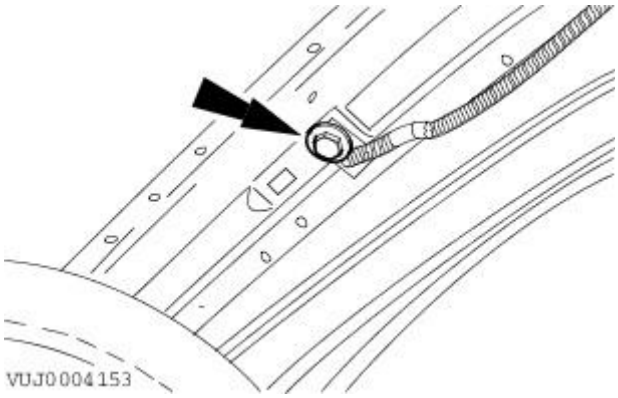

5. Install the side air curtain module cord retaining bolt.
   - Tighten to 9 Nm.

6. Install the headliner. For additional information, refer to Section 501-05 Interior Trim and Ornamentation.
7. Connect the battery ground cable. For additional information, refer to Section 414-01 Battery, Mounting and Cables.

Supplemental Restraint System - Side Air Curtain ModuleWagon

Removal and Installation

Removal

1. WARNINGS:

A restraint control module (RCM) only requires replacement if the system has incurred five separate deployments. At no time change an RCM for less than five separate deployments.

Always wear safety glasses when repairing an air bag supplemental restraints system (SRS) vehicle and when handling an air bag module. Failure to follow this instruction may result in personal injury.

Carry a live air bag module with the air bag and trim cover pointed away from your body. This will reduce the risk of injury in the event of an accidental deployment. Failure to follow this instruction may result in personal injury.

Do not set a live air bag module down with the trim cover face down. Failure to follow this instruction may result in personal injury.

After deployment, the air bag surface can contain deposits of sodium hydroxide, a product of the gas generant combustion that is irritating to the skin. Wash your hands with soap and water afterwards. Failure to follow this instruction may result in personal injury.

Never probe the connectors on the air bag module. Doing so may result in air bag deployment. Failure to follow this instruction may result in personal injury.

Air bag modules with discolored or damaged trim covers must be replaced.

Vehicle sensor orientation is critical for correct system operation. If a vehicle equipped with an air bag SRS is involved in a collision, inspect the sensor mounting bracket and wiring pigtail for deformation. If damaged, install a new sensor whether or not the air bag is deployed. If the body work is damaged this will have to be addressed.

To avoid accidental deployment and possible personal injury, the backup power supply must be depleted before repairing or replacing any air bag SRS components. To deplete the backup power supply energy, disconnect the battery ground cable and wait one minute. Failure to follow this instruction may result in personal injury.

• NOTE: Repair is made by replacement only. If a part is replaced and the new part does not correct the condition, install the original part and carry out the diagnostic procedure again.

• NOTE: When installing a new air bag module, a prepaid return postcard is provided with the replacement air bag module. The serial number for the new part and the vehicle identification number (VIN) must be recorded and sent to Jaguar Cars Ltd.

Disconnect the battery ground cable. For additional information, refer to For additional information, refer to: Battery Disconnect and Connect (414-01 Battery, Mounting and Cables, General Procedures).

2. Remove the overhead console.
For additional information, refer to: Overhead Console (501-12 Instrument Panel and Console, Removal and Installation).

3. Remove the sun visor retaining clips.

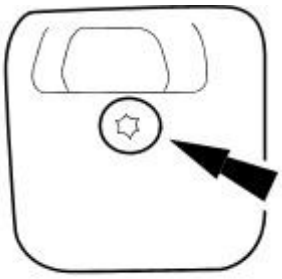

VUJ0003728

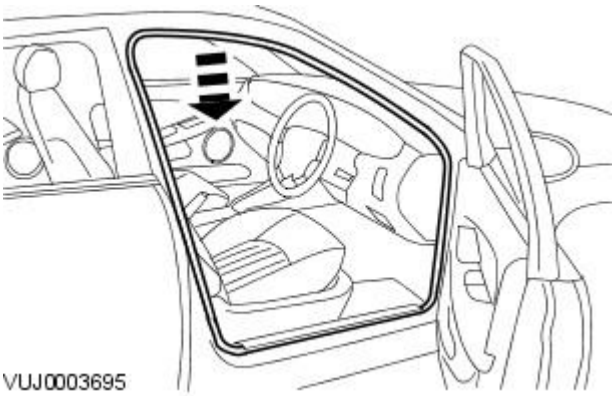

4. NOTE: Right-hand shown, left-hand similar.

Detach the front door opening weatherstrips.

5. Remove the A-pillar trim panels.
For additional information, refer to: A-Pillar Trim Panel (501-05 Interior Trim and Ornamentation, Removal and Installation).

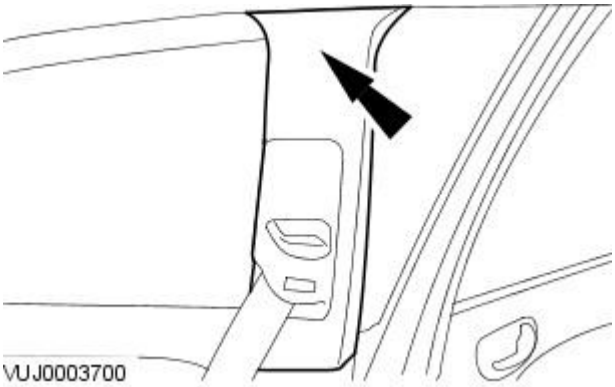

6. NOTE: Right-hand shown, left-hand similar.

Detach the B-pillar upper trim panels.

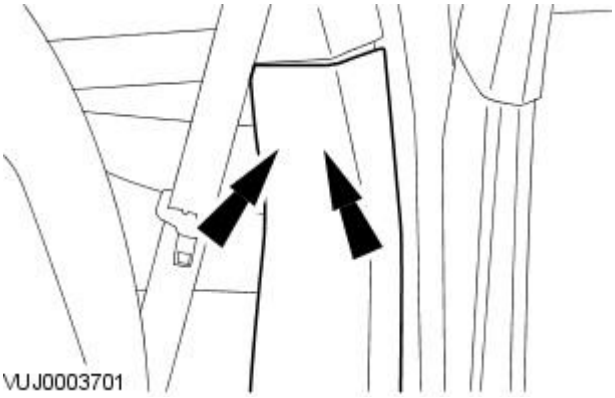

7. NOTE: Right-hand shown, left-hand similar.

Detach the B-pillar lower trim panels.

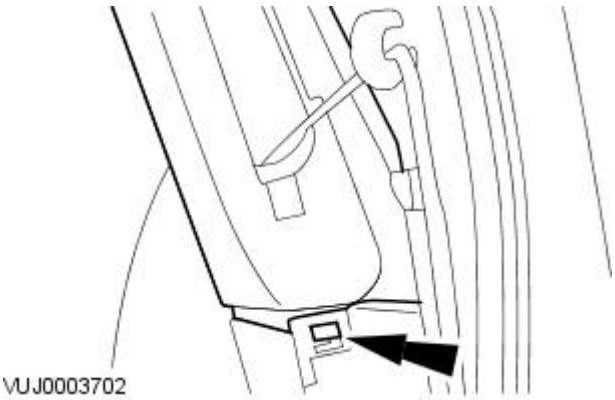

8. NOTE: Right-hand shown, left-hand similar.

Detach the B-pillar upper trim panels from the B-pillar trim lower trim panels.

9. Remove the C-pillar trim panels.
For additional information, refer to: C-Pillar Trim Panel - Wagon (501-05 Interior Trim and Ornamentation, Removal and Installation).

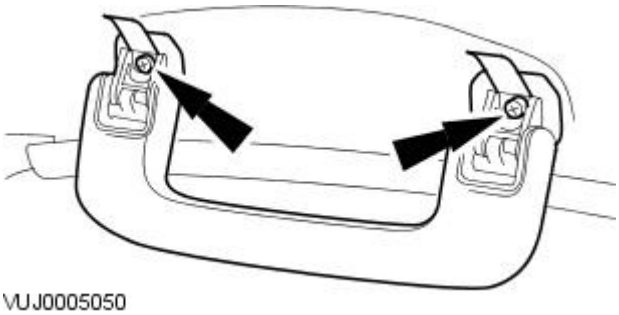

VUJ0005050

10. Lever open the covers to expose the screws and remove the driver and passenger assist handles.

11. Remove the D-pillar trim panels.
For additional information, refer to: D-Pillar Trim Panel (501-05 Interior Trim and Ornamentation, Removal and Installation).

12. NOTE: Right-hand shown, left-hand similar.

Remove the luggage net retaining clip.

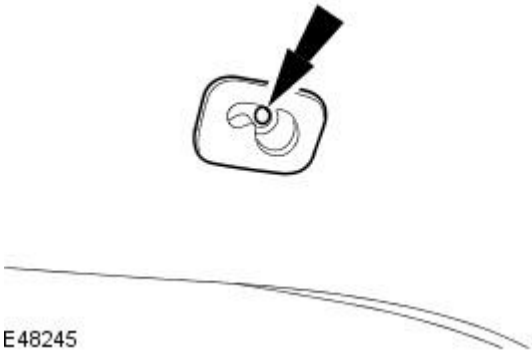

E48245

13. Detach the headliner.

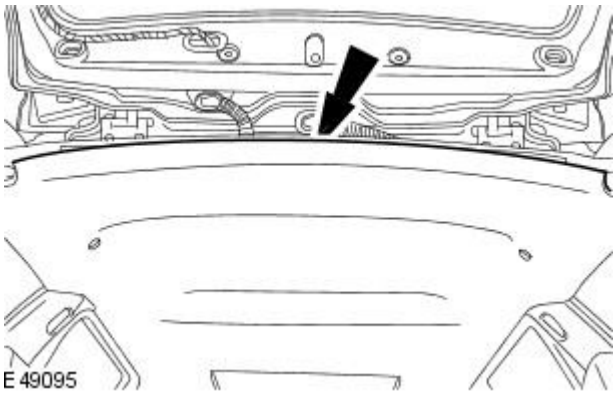

E49095

14. CAUTION: The headliner must not be creased or folded during removal or installation. Failure to follow this instruction may result in damage to the component.

Lower the headliner.

- Remove the sunroof opening panel weatherstrip.

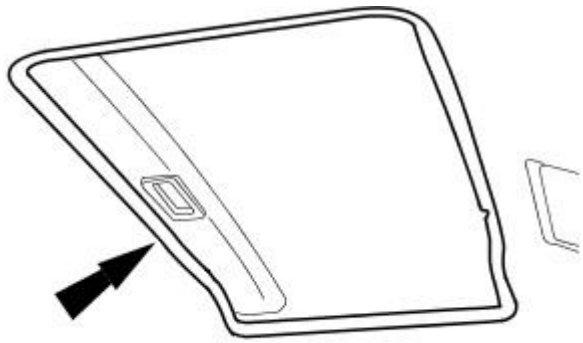

VUJ0005047

15. Disconnect the sunroof motor electrical connector.

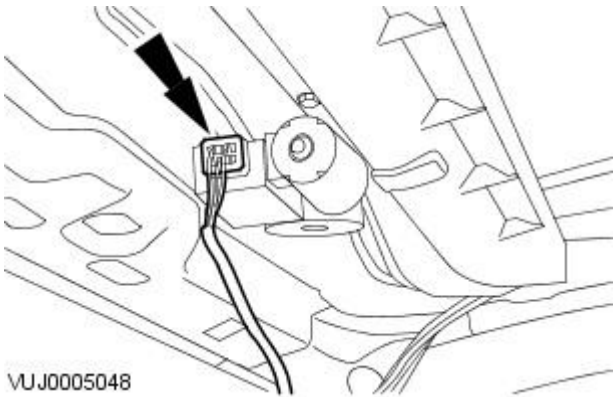

VUJ0005048

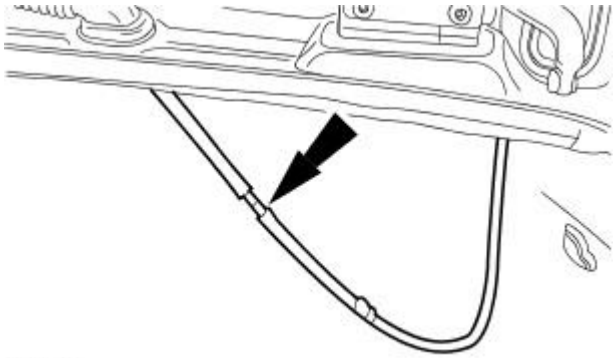

16. Disconnect the rear washer hose connector.

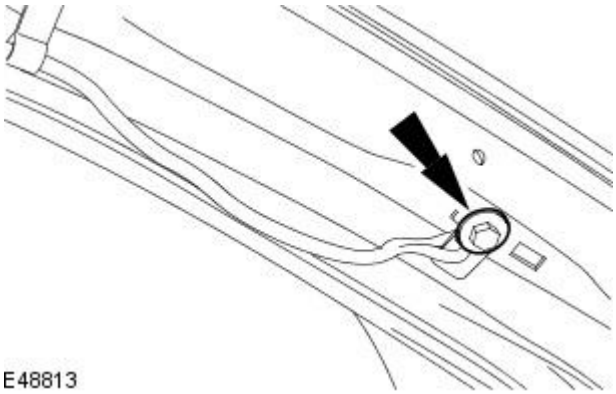

17. NOTE: To aid installation, note the routing of the retaining cord.

Remove the side air curtain module front cord retaining bolt.

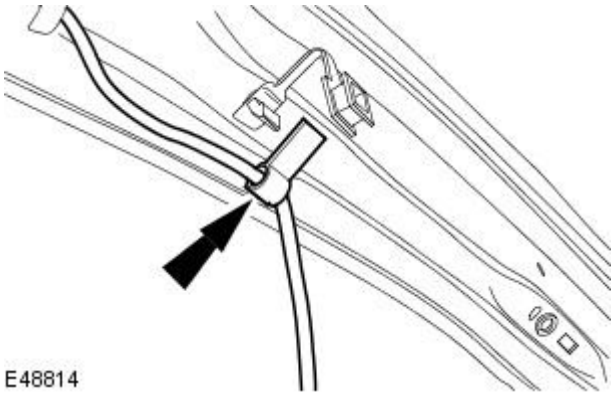

18. NOTE: To aid installation, note the routing of the retaining cord.

Detach the side air curtain module front cord from the retaining clip.

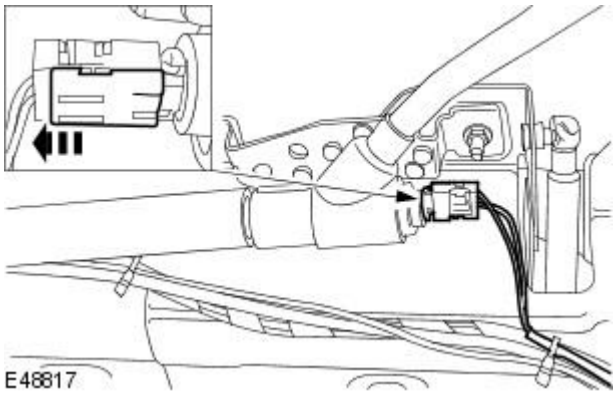

19. NOTE: To disconnect, slide back the locking tang.

Disconnect the side air curtain module electrical connector.

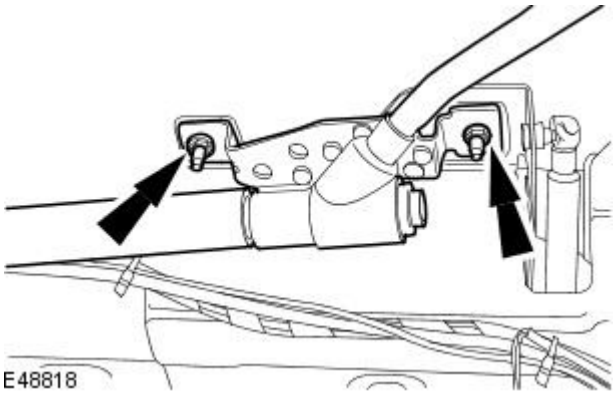

20. Remove the side air curtain module retaining nuts.

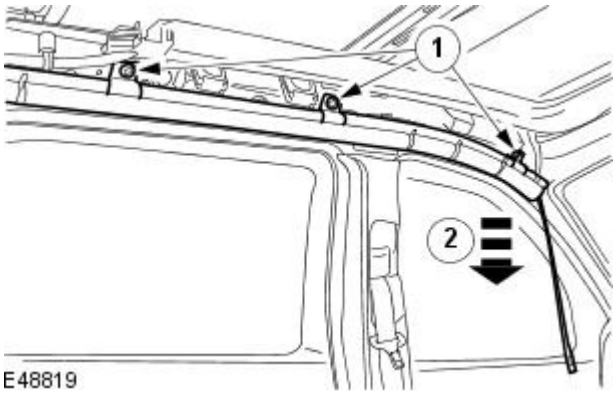

21. Remove the side air curtain module.

1. Remove the retaining bolts.
2. Detach the retaining clip.

Installation

• WARNINGS:

An restraint control module (RCM) only requires replacement if the system has incurred five separate deployments. At no time change an RCM for less than five separate deployments.

Always wear safety glasses when repairing an air bag supplemental restraints system (SRS) vehicle and when handling an air bag module. Failure to follow this instruction may result in personal injury.

Carry a live air bag module with the air bag and trim cover pointed away from your body. This will reduce the risk of injury in the event of an accidental deployment. Failure to follow this instruction may result in personal injury.

Never probe the connectors on the air bag module. Doing so may result in air bag deployment. Failure to follow this instruction may result in personal injury.

• NOTE: Repair is made by replacement only. If a part is replaced and the new part does not correct the condition, install the original part and carry out the diagnostic procedure again.

• NOTE: Tighten the retaining bolts to the correct specification and in the indicated sequence shown.

• NOTE: Make sure the side air curtain module tang is correctly located.

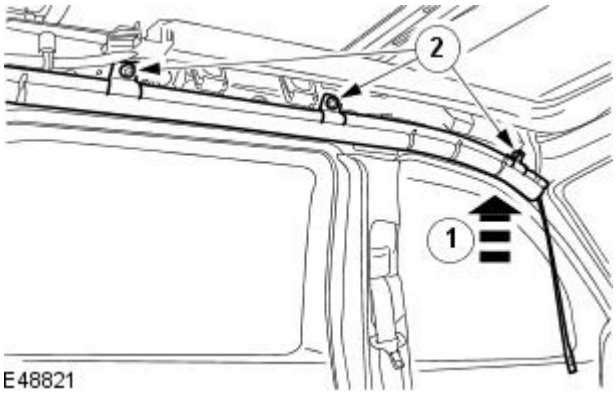

1. To install, reverse the removal procedure.

1. Tighten to 9 Nm.

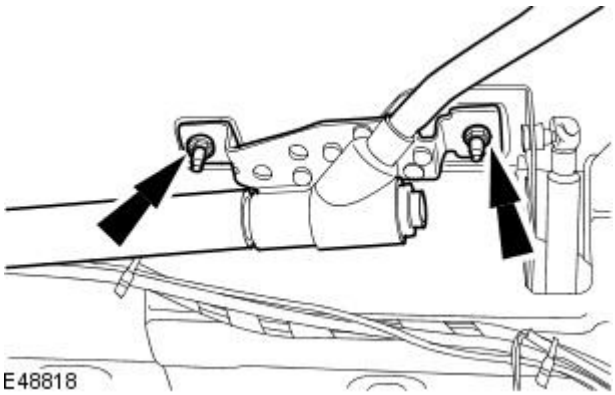

2. Tighten to 9 Nm.

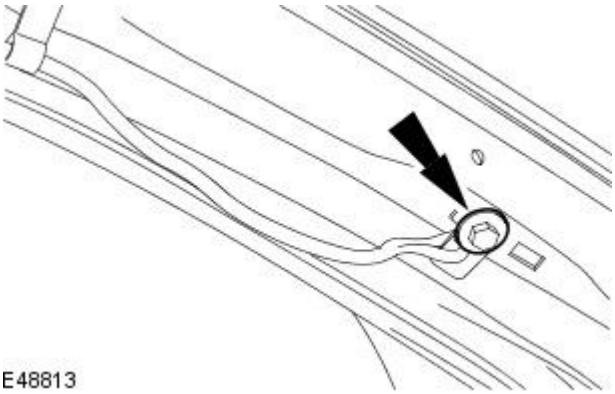

3. Tighten to 9 Nm.

Supplemental Restraint System - Side Impact Sensor

Removal and Installation

Removal

1. WARNINGS:

To avoid accidental deployment and possible personal injury, the backup power supply must be depleted before repairing or replacing any air bag supplemental restraints system (SRS) components. To deplete the backup power supply energy, disconnect the battery ground cable and wait one minute. Failure to follow this instruction may result in personal injury.

Never probe the electrical connectors of air bag modules or any other SRS component. Failure to follow this instruction may result in personal injury.

• NOTE: Repair is made by replacement only. If a part is replaced and the new part does not correct the condition, install the original part and carry out the diagnostic procedure again.

Disconnect the battery ground cable. For additional information, refer to Section 414-01 Battery, Mounting and Cables.

2. Position the seat fully forwards.

3. Remove the B-pillar lower trim panel. For additional information, refer to Section 501-05 Interior Trim and Ornamentation.

4. NOTE: Left-hand shown, right-hand similar.

Disconnect the side impact sensor electrical connector.

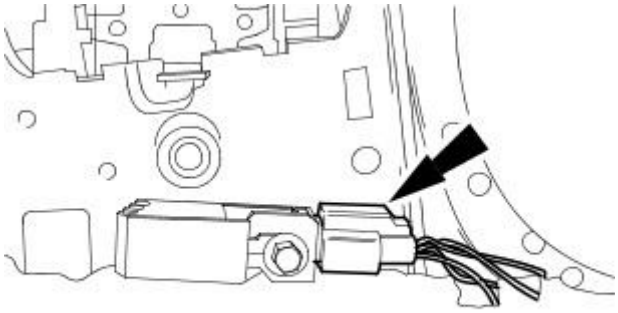

VUJ0004147

5. NOTE: Left-hand shown, right-hand similar.

Remove the side impact sensor.

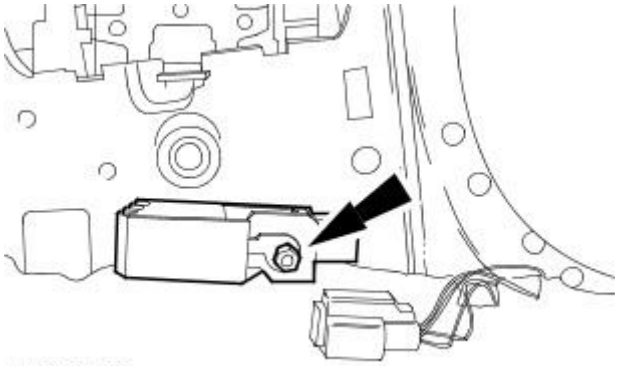

VUJ0004148

Installation

1. WARNINGS:

To avoid accidental deployment and possible personal injury, the backup power supply must be depleted before repairing or replacing any air bag supplemental restraints system (SRS) components. To deplete the backup power supply energy, disconnect the battery ground cable and wait one minute. Failure to follow this instruction may result in personal injury.

Make sure the side impact sensor locating tangs are correctly located into the B-pillar. Failure to follow this instruction may result in personal injury.

Never probe the electrical connectors of air bag modules or any other SRS component. Failure to follow this instruction may result in personal injury.

To install, reverse the removal procedure.

- Tighten to 12 Nm.

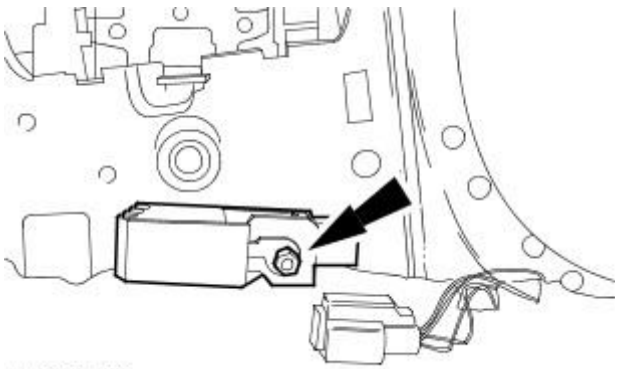

VUJ0004148

Uni-Body, Subframe and Mounting System -

Lubricants, Fluids, Sealers and Adhesives

	Specification
Bush installation lubrication	Shell gravex oil 973

Torque Specifications

Description	Nm	lb-ft	lb-in
Front subframe front mount retaining bolts	142	105	-
Front subframe rear mount retaining bolts	142	105	-
Front subframe reinforcement plate retaining bolts	35	26	-
Front stabilizer bar link arm retaining nuts	47	35	-
Steering gear heat shield retaining bolts	7	-	62
Steering gear to subframe retaining bolts	133	98	-
Steering gear cooling pipe retaining bolts	7	-	62
Engine roll restrictor retaining bolts	80	59	-
Front lower arm ball joint retaining nuts	83	61	-
Rear subframe mounting retaining bolts	126	93	-
Rear shock absorber to wheel knuckle retaining bolts	130	96	-
Wheel knuckle mounting bracket to body retaining bolts	126	93	-
Rear brake caliper retaining bolts	32	24	-

Uni-Body, Subframe and Mounting System - Frame Assembly

Description and Operation

FRONT SUB-FRAME ASSEMBLY

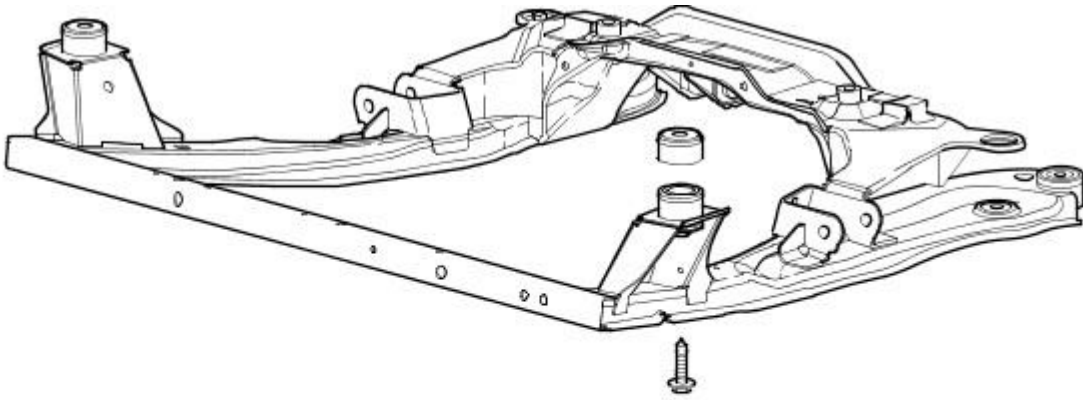

VUJ0004111

The front sub-frame is bolted to the body and aids in structural support. The front sub-frame provides the mounting surface for the steering gear, the front suspension lower arm, the stabilizer bar and the engine roll restrictor support bracket.

On vehicles from 2009MY using the 2.2 Diesel engine and the AW F21 6 speed transmission, a dynamic damper is fitted to the front sub-frame. The damper improves refinement in the 1500-1800 rpm range of the engine. The damper is attached to the rear LH (left-hand) corner of the sub-frame. An integral stud on the damper is located through a hole in the sub-frame and secured with a flanged nut.

REAR SUB-FRAME ASSEMBLY

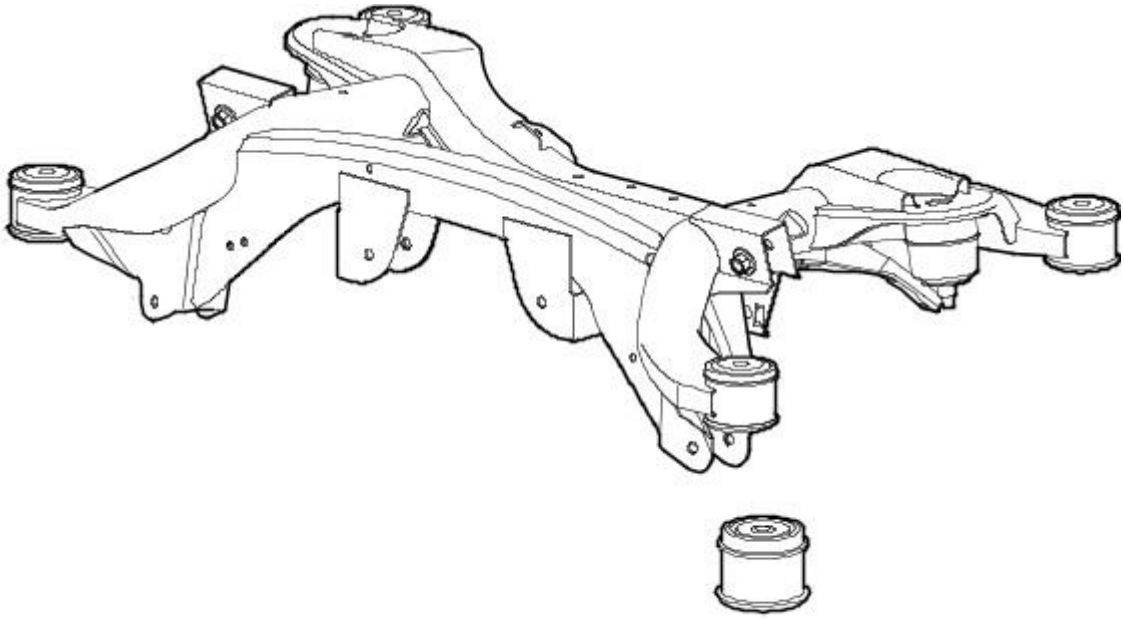

VUJ0004112

The rear sub-frame is bolted to the body and aids in structural support. The rear sub-frame provides the mounting surface for the rear suspension components, the exhaust hanger insulator and the rear drive differential.

Uni-Body, Subframe and Mounting System - Underbody Misalignment Check

General Procedures

Special Tool(s)	
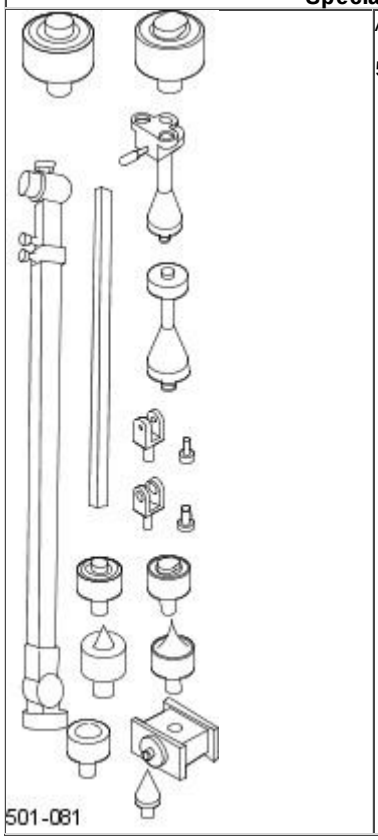	Alignment equipment 501-081

501-081

1. Raise and support the vehicle on a two post ramp. For additional information, refer to Section 100-02 Jacking and Lifting.
2. Inspect all underbody structural members for cracks, twists or bends. Check all welded connections for cracks. Inspect the support brackets for looseness. Perform any necessary service or make replacements as required.
3. Install the alignment pins supplied with special tool number HTJ1200-2 to the rear of the front subframe for the initial front subframe to vehicle body alignment check.

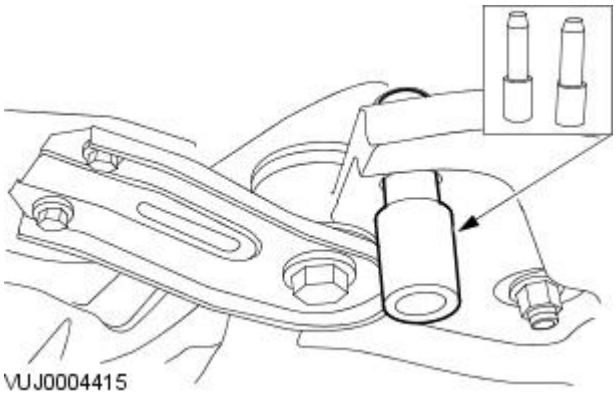

VUJ0004415

4. Remove the alignment pins.

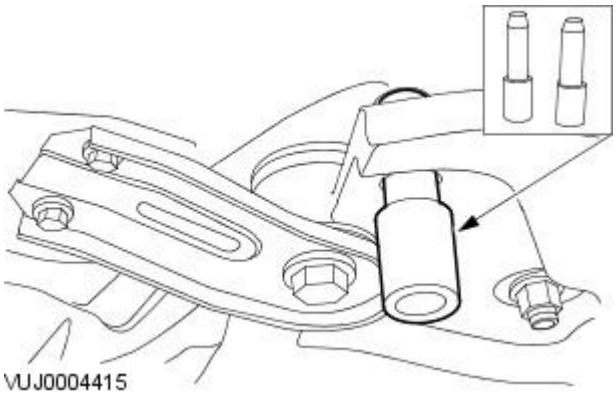

VUJ0004415

VUJ0002768

5. CAUTION: Make sure the measuring equipment is used the right way up as shown in the illustration.

The Z measurement is set on the special tool before the X measurement is taken on the vehicle.

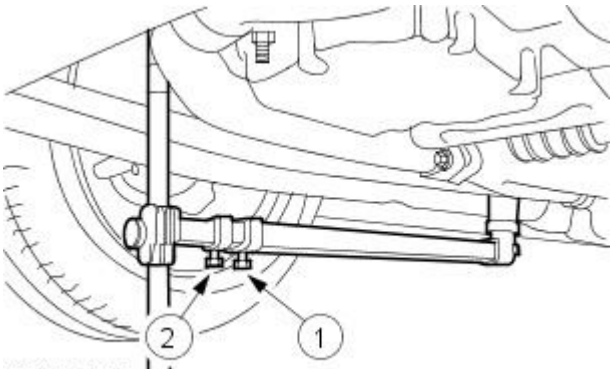

VUJ0002767

6. CAUTION: Make sure the measuring equipment is used the right way up as shown in the illustration.

• NOTE: Make sure the inner part of the measuring bar is fully retracted and the lock fully tightened before any measurements are taken.

Take the X measurement.

1. Take the X measurement using the middle part of the measuring bar.
2. If the middle part of the measuring bar locks into its fully extended position, continue taking the X measurement on the inner part of the measuring bar.

7. NOTE: The smallest diameter pin and bracket (D) is fitted to vehicles with automatic transmission. The bracket is marked A.The larger diameter pin and bracket (D) is fitted to vehicles with manual transmission. The bracket is marked M.

• NOTE: Clean all the special tool mounting surfaces before installing the special tools.

Install the special tools to the underside of the vehicle.

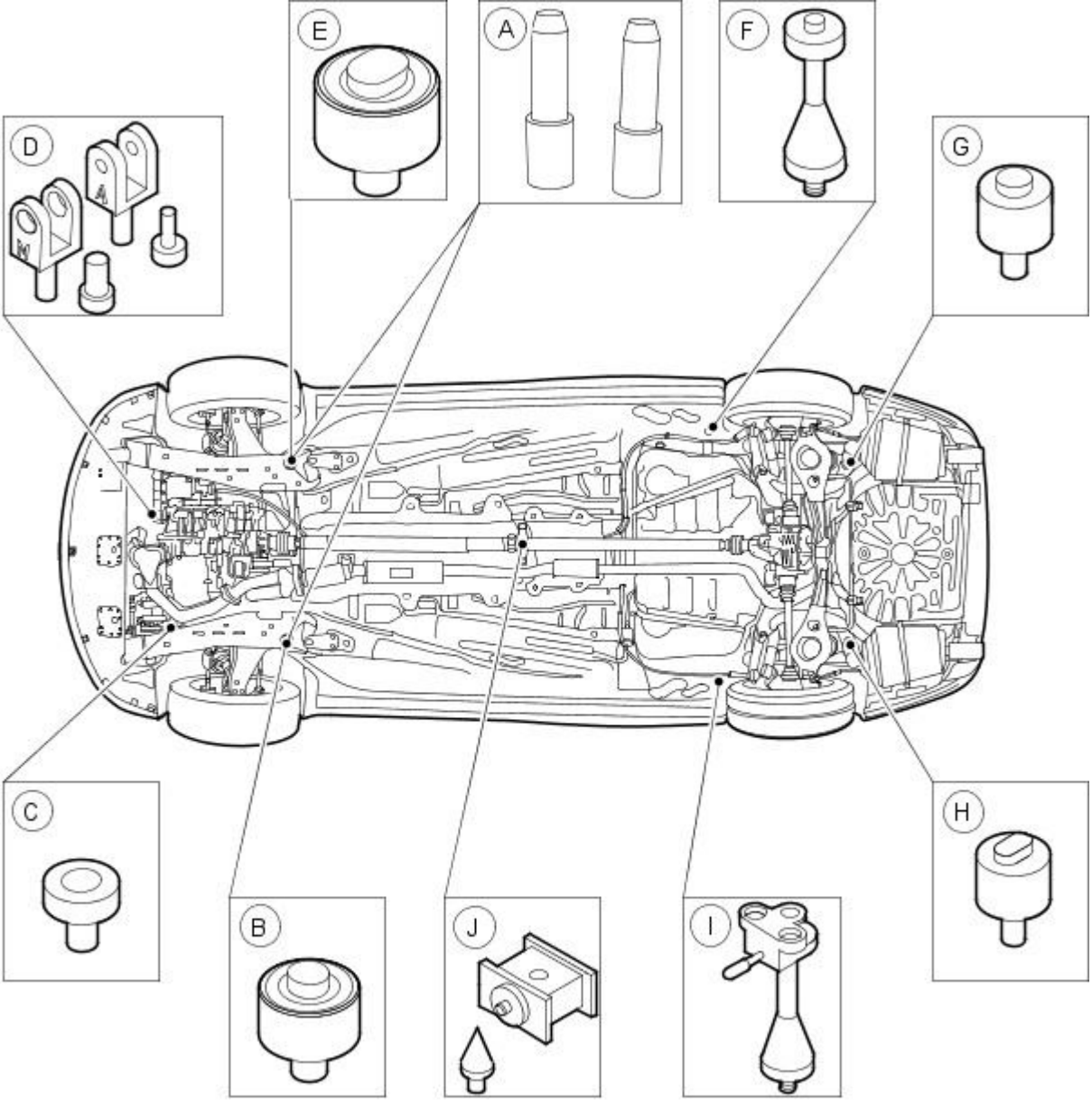

VUJ0002765

8. NOTE: The smallest diameter pin and bracket (D) is fitted to vehicles with automatic transmission. The larger diameter pin and bracket (D) is fitted to vehicles with manual transmission.

• NOTE: Clean all the special tool mounting surfaces before installing the special tools.

Install the special tools to the underside of the vehicle.

VUJ0004499

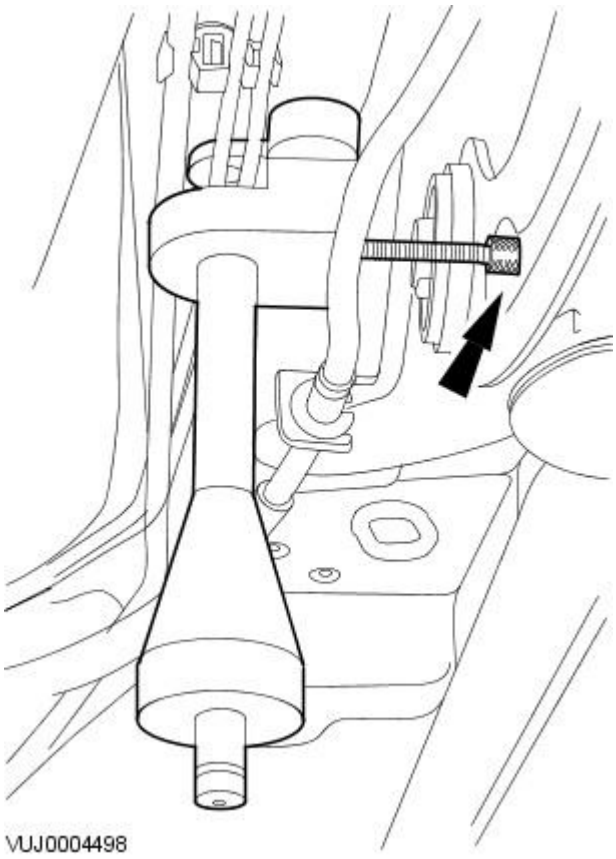

VUJ0004498

9. CAUTION: When installing or removing the special tool make sure the brake pipes are not damaged or detached from the retaining clips.

Adjust the steady screw to the front of the wheel knuckle to stabilize the special tool to the underside of the vehicle.

10. Underbody dimension tolerances are ± 2 mm (0.08 inch).

Underbody Dimensions

X-Dimension	Millimeter	Inch
1-All vehicles	674.00	26.28
2-All vehicles	977.00	38.10
3-Manual transmission	877.00	34.20
4-Manual transmission	708.00	27.61
3-Automatic transmission	924.00	36.04
4-Automatic transmission	736.00	28.70
5-All vehicles	799.00	31.16
6-All vehicles	1258.00	49.06
7-All vehicles	1258.00	49.06
8-All vehicles	799.00	31.16
9-All vehicles	957.00	37.32
10-All vehicles	997.00	38.88

Underbody Measurements

Measurement number	Z-Measuring height	From point	To point
1-All vehicles	117mm	B	C
2-All vehicles	117mm	E	C
3-Manual transmission	126mm	B	D
4-Manual transmission	126mm	E	D
3-Automatic transmission	126mm	B	D
4-Automatic transmission	126mm	E	D
5-All vehicles	314mm	I	H
6-All vehicles	314mm	F	H
7-All vehicles	314mm	I	G
8-All vehicles	314mm	F	G
9-All vehicles	122mm	F	J
10-All vehicles	122mm	I	J

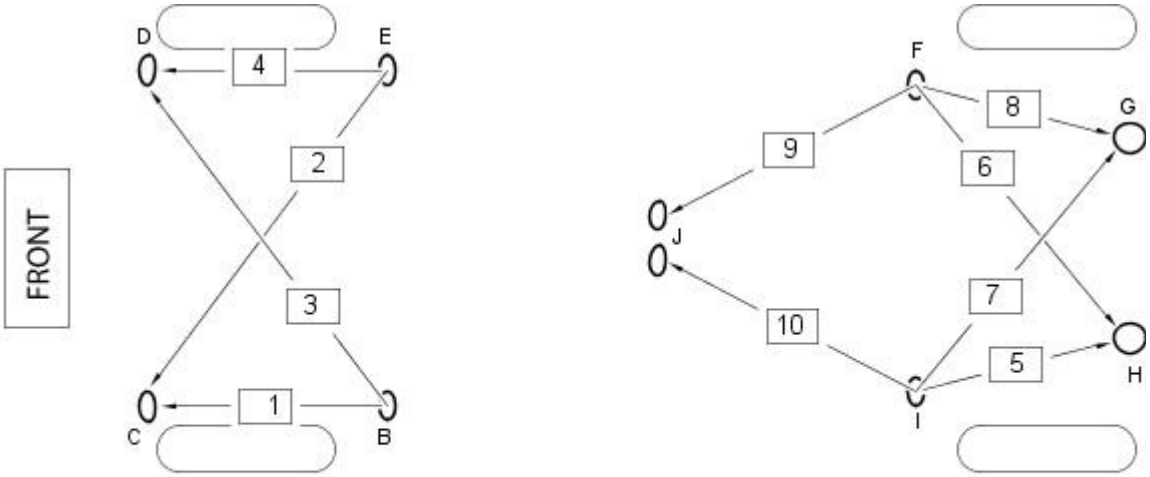

VUJ0002766

Uni-Body, Subframe and Mounting System - Front Subframe2.0L NA V6 - AJV6 / 2.5L NA V6 - AJV6 / 3.0L NA V6 - AJ27

Removal and Installation

Special Tool(s)	
HTJ12002	Powertrain Assembly Jack HTJ1200-2

Removal

All vehicles

1. Remove the front wheels and tires.
   For additional information, refer to: Wheel and Tire (204-04 Wheels and Tires, Removal and Installation).
2. Remove the radiator splash shield.
   For additional information, refer to: Radiator Splash Shield (501-02 Front End Body Panels, Removal and Installation).

All vehicles

3. Remove the front muffler.
   For additional information, refer to: Front Muffler - 2.0L NA V6 - AJV6/2.5L NA V6 - AJV6/3.0L NA V6 - AJ27 (309-00 Exhaust System, Removal and Installation).
4. Remove the muffler inlet pipe.
   For additional information, refer to: Muffler Inlet Pipe - 2.0L NA V6 - AJV6/2.5L NA V6 - AJV6/3.0L NA V6 - AJ27 (309-00 Exhaust System, Removal and Installation).
5. NOTE: Mark the position of the driveshaft in relation to the drive pinion flange.

   Remove two opposing driveshaft universal joint retaining bolts.

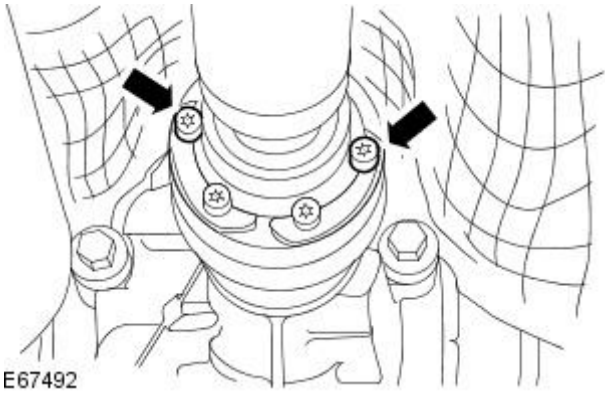
E67492

6. Loosen the remaining driveshaft universal joint retaining bolts.

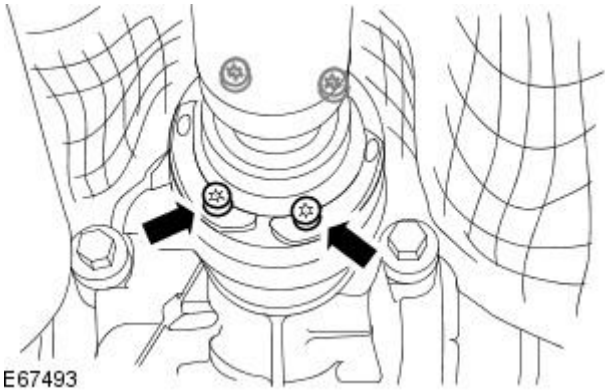
E67493

7. Detach the engine roll restrictor.

- Remove the engine roll restrictor retaining bolt.

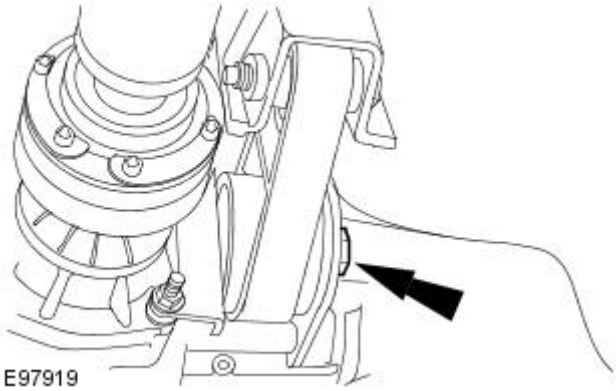

8. Remove the engine roll restrictor.

- Remove the engine roll restrictor retaining bolt.

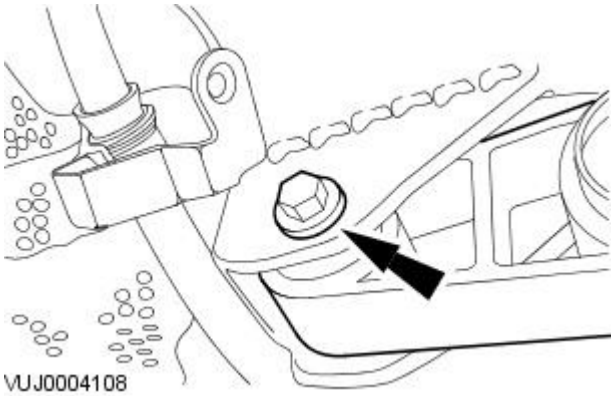

9. NOTE: If installed, remove and discard the gasket.

Detach the driveshaft from drive pinion flange.

- Remove and discard the driveshaft retaining bolts and link washers.

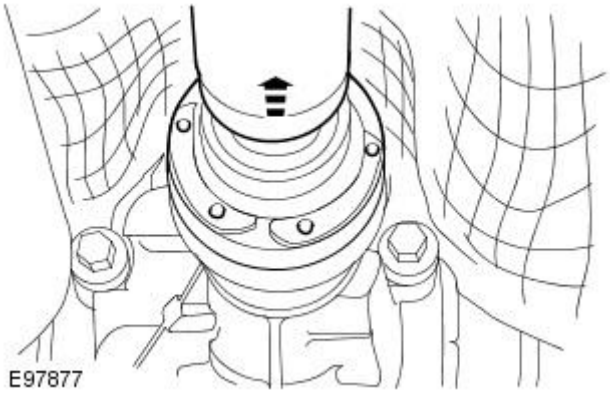

10. Using suitable tie straps, secure the outer casing of the driveshaft universal joint.

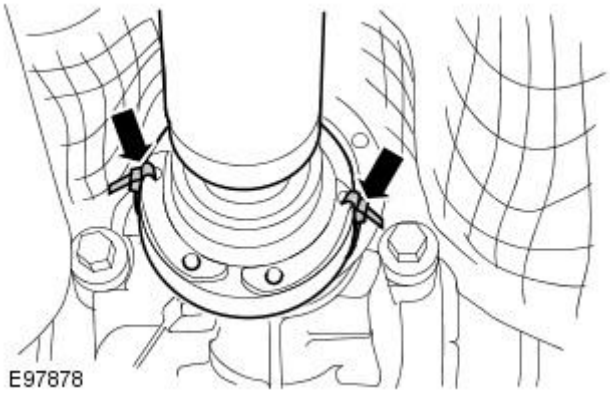

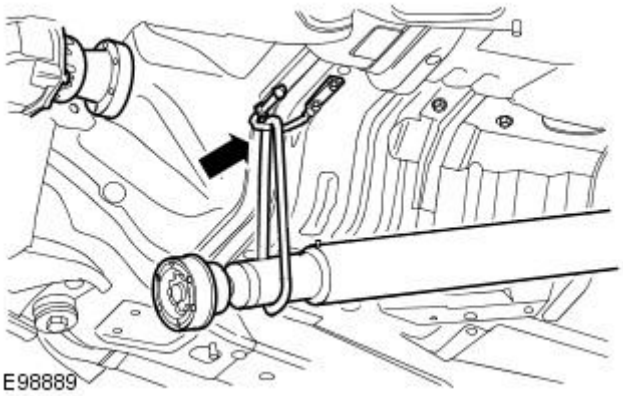

11. CAUTION: Make sure that the driveshaft does not hang on the center universal joint. Failure to follow this instruction may result in damage to the driveshaft.

Using suitable tie straps, secure the driveshaft to the front exhaust hanger .

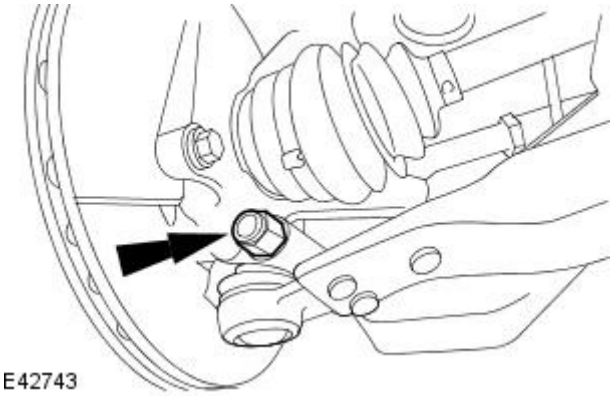

12. NOTE: Right-hand shown, left-hand similar.

Remove the lower arm ball joint nut and bolt.

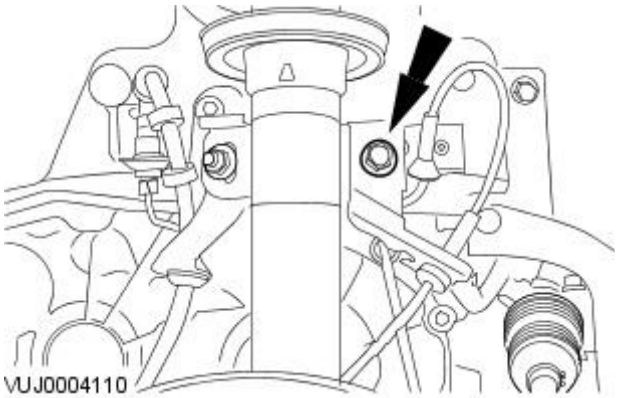

13. NOTE: Left-hand shown, right-hand similar.

Detach the stabilizer bar link arms.

Vehicles with high intensity discharge headlamps

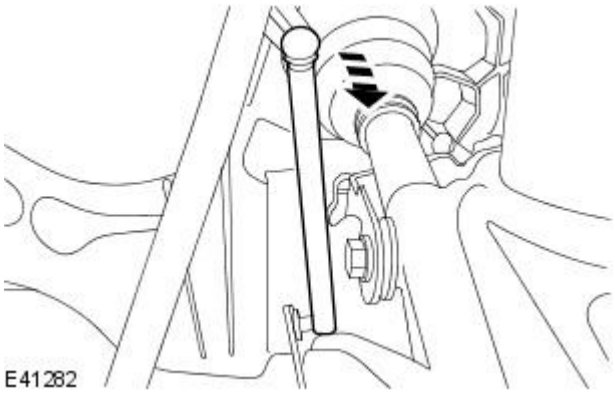

14. Disconnect the high intensity discharge (H.I.D) sensor drop arm.

All vehicles

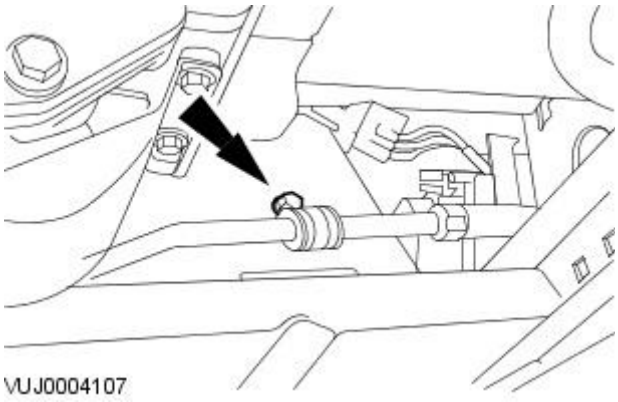

15. Detach the front of the steering gear cooling pipe.

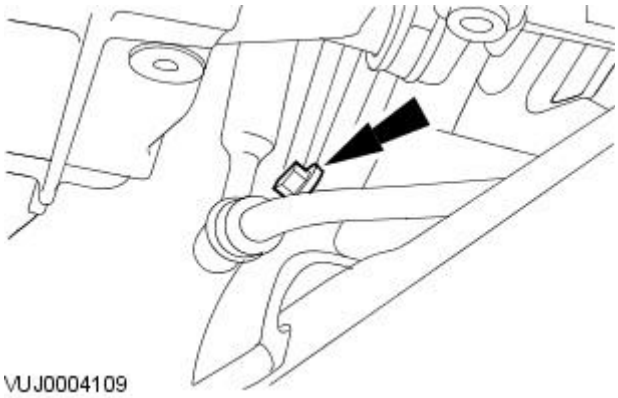

16. Detach the rear of the steering gear cooling pipe.

Vehicles with automatic transmission

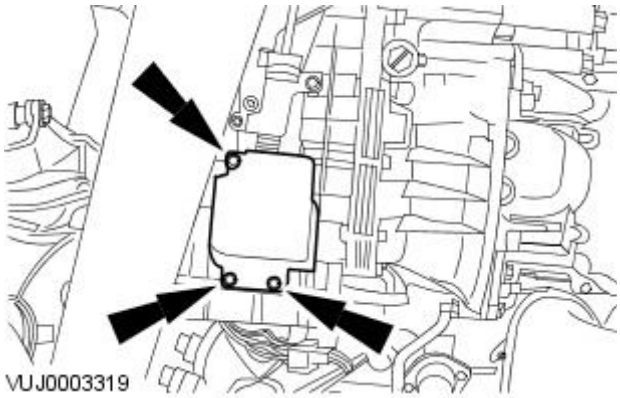

17. Remove the selector cable shield.

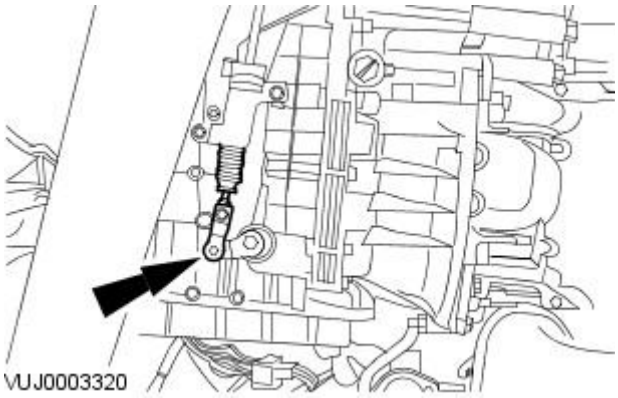

18. Detach the selector cable.

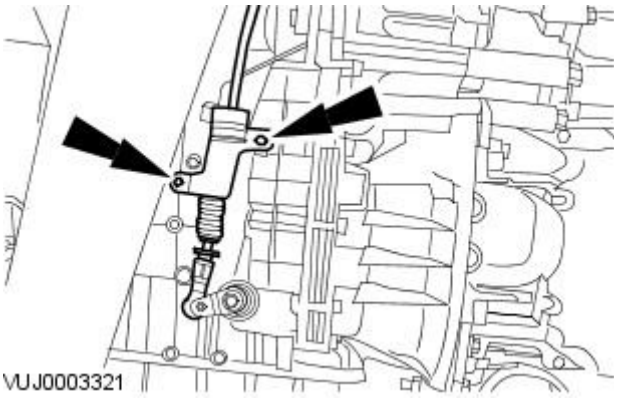

19. Disconnect the selector cable.

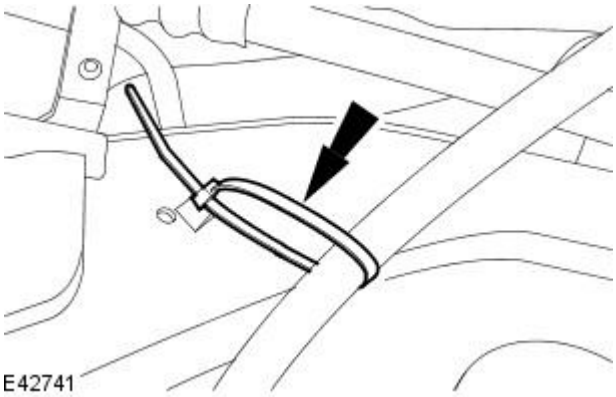

20. NOTE: Secure the selector cable using tie straps.

Detach the selector cable.

All vehicles

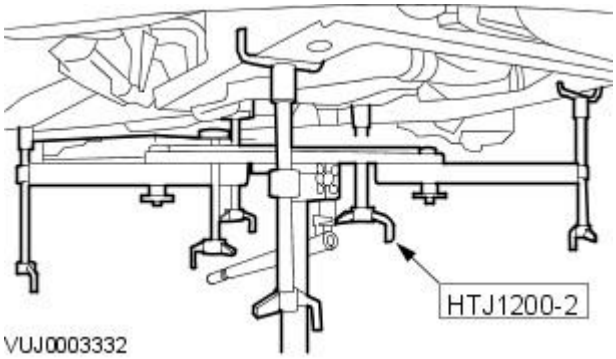

21. Install the special tool.

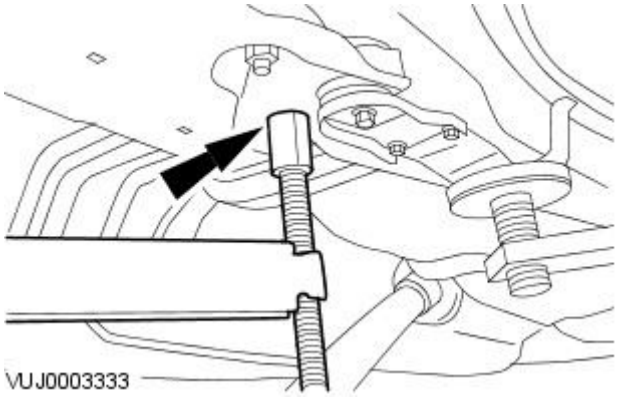

22. NOTE: Left-hand shown, right-hand similar.

Position and adjust the special tool rear height adjuster.

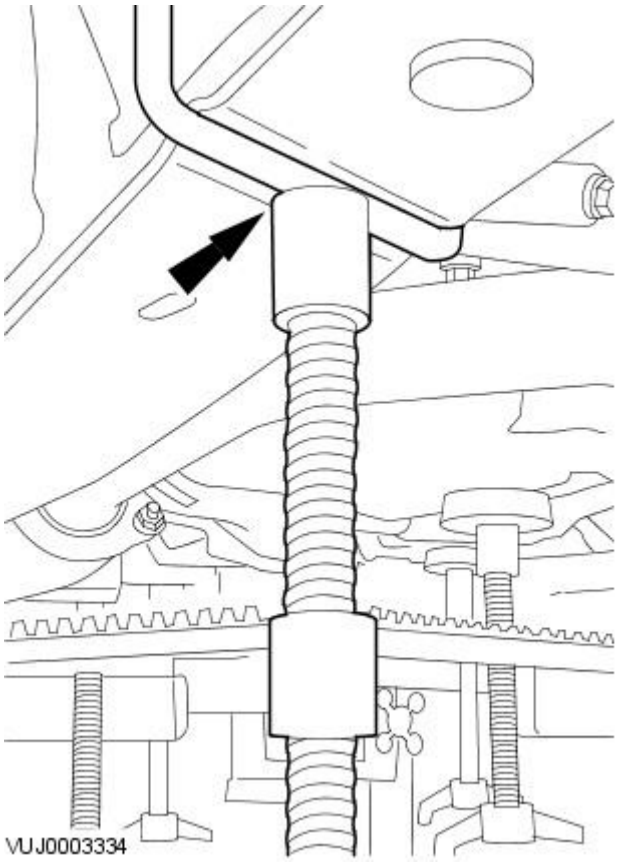

23. NOTE: Right-hand shown, left-hand similar.

Position and adjust the special tool front height adjuster.

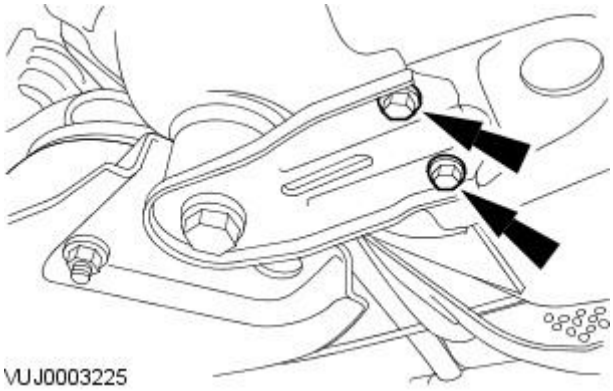

24. NOTE: Left-hand shown, right-hand similar.

Remove the front subframe reinforcement plate retaining bolts.

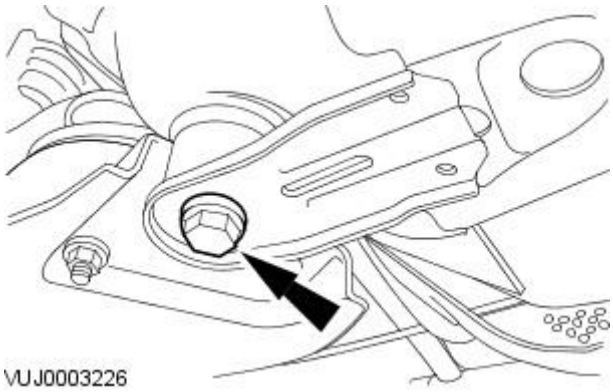

25. NOTE: Left-hand shown, right-hand similar.

Remove the front subframe rear mount retaining bolts.

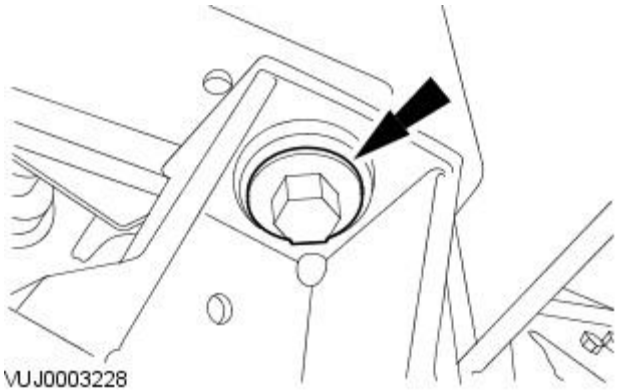

26. NOTE: Right-hand shown, left-hand similar.

Remove the front subframe front mount retaining bolts.

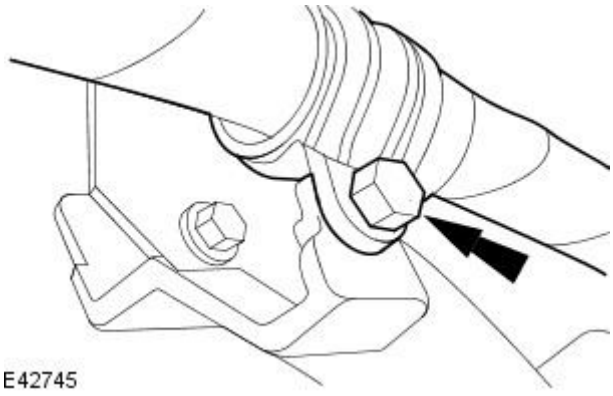

27. Detach the steering gear supply pipe from the steering gear heat shield mount bracket.

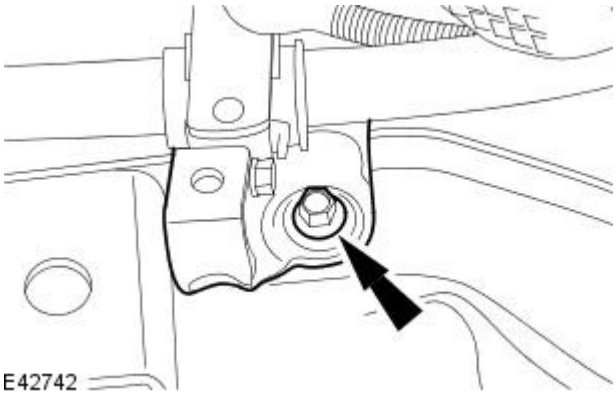

28. Detach the steering gear heat shield mount bracket.

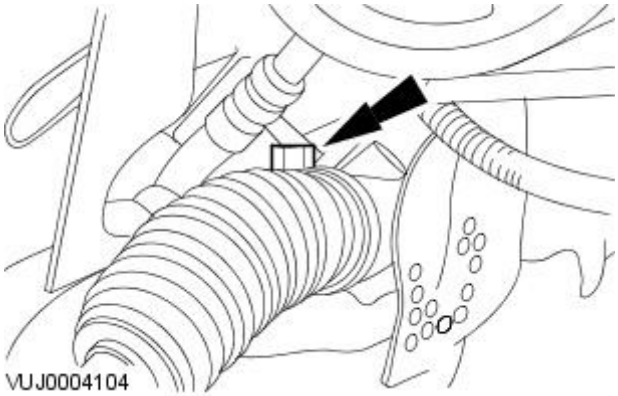

29. Detach the right-hand side of the steering gear.

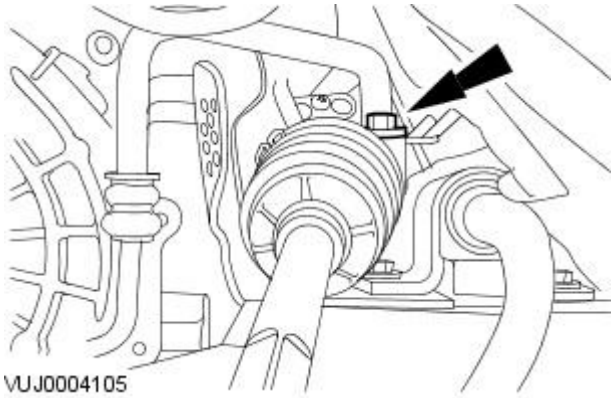

30. Detach the left-hand side of the steering gear.

31. Using suitable securing straps, secure the steering gear to the vehicle body.

32. Remove the steering gear heat shield lower retaining bolts.

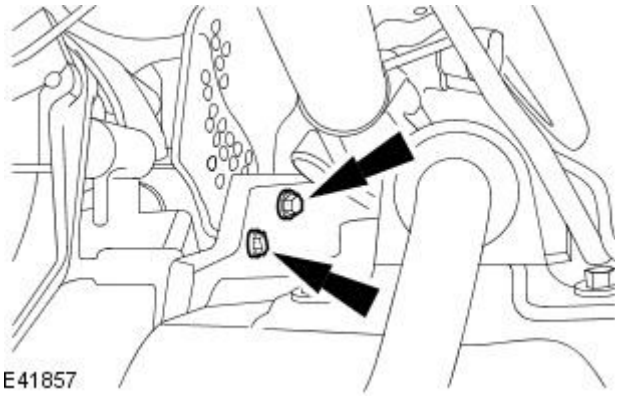

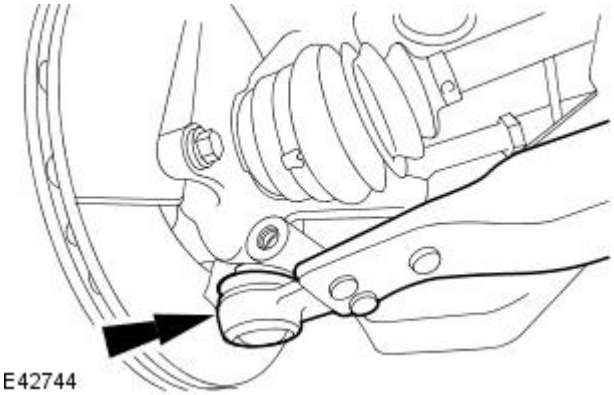

33. CAUTION: To prevent damage to the lower arm bushing, detach the lower arm ball joint as the subframe is being lowered. Failure to follow this instruction may result in damage to the vehicle.

• NOTE: Right-hand shown, left-hand similar.

Detach the lower arm.

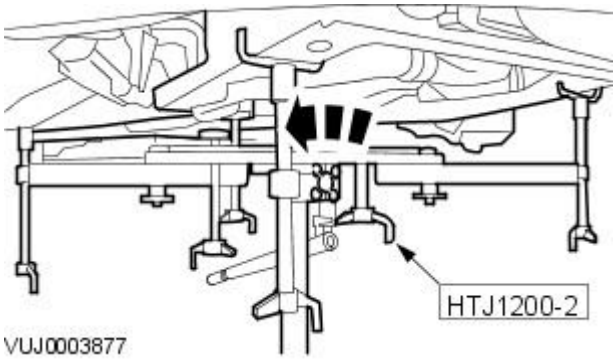

34. WARNING: Rotate the special tool height adjustment valve slowly. Failure to follow this instruction may result in personal injury.

Remove the subframe.

- Rotate the special tool height adjustment valve counter clockwise.
- Lower the special tool.

Installation

All vehicles

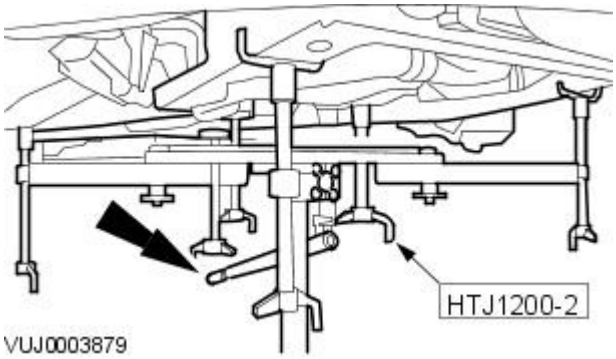

1. WARNING: Raise the special tool platform slowly. Failure to follow this instruction can result in personal injury.

Install the subframe.

- Raise the special tool platform.

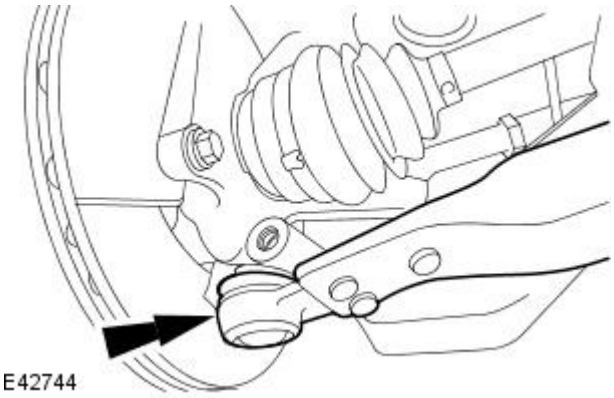

2. CAUTION: To prevent damage to the lower arm bushing, attach the lower arm ball joint as the subframe is being raised. Failure to follow this instruction may result in damage to the vehicle.

• NOTE: Right-hand shown, left-hand similar.

Attach the lower arm.

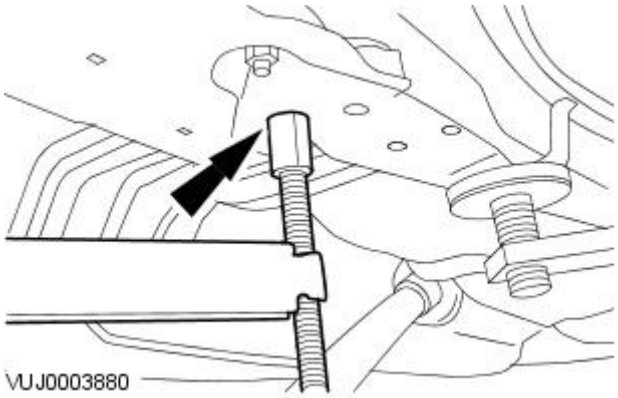

3. NOTE: Left-hand shown, right-hand similar.

Make sure the special tool rear height adjuster aligns into the locating hole in the vehicle floor pan.

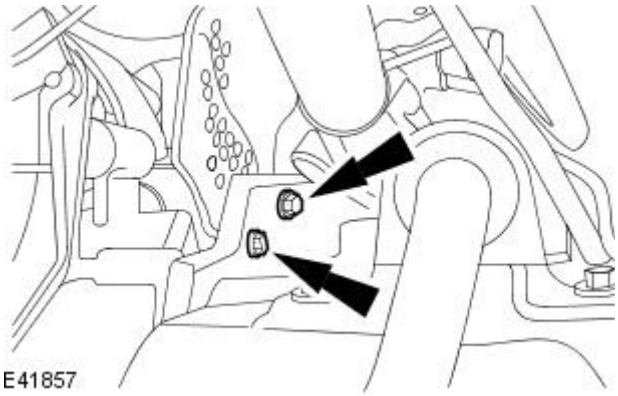

4. Install the steering gear heat shield lower retaining bolts.

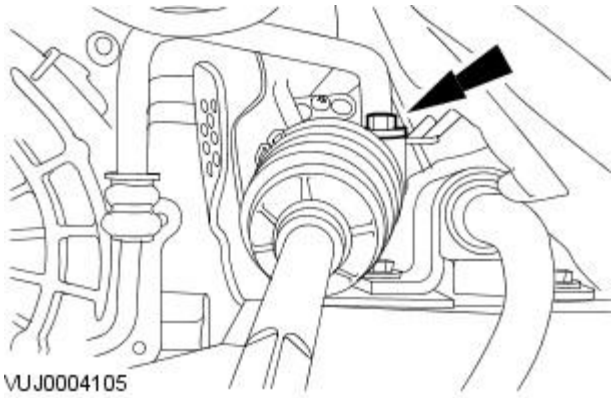

5. Remove the steering gear securing straps.

6. Attach the left-hand side of the steering gear.

- Tighten to 133 Nm.

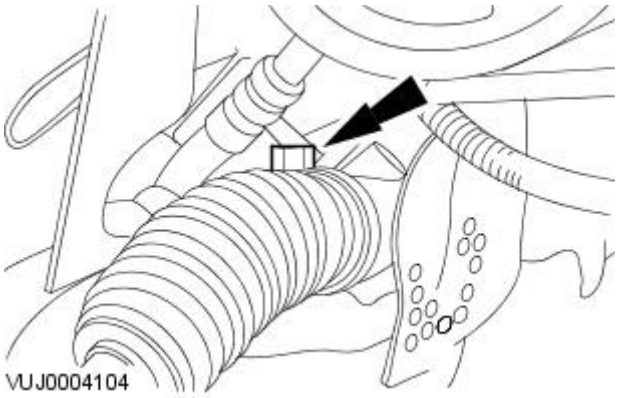

7. Attach the right-hand side of the steering gear.

- Tighten to 133 Nm.

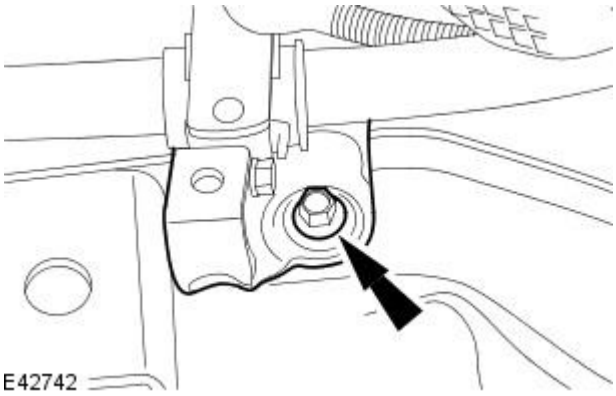

8. Attach the steering gear heat shield mount bracket.

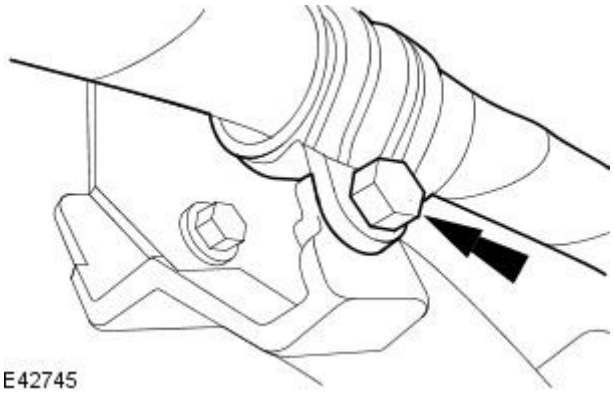

9. Attach the steering gear supply pipe to the steering gear heat shield mount bracket.

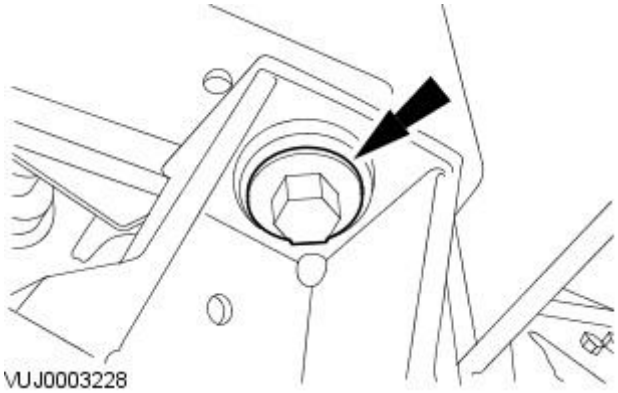

10. NOTE: Right-hand shown, left-hand similar.

Loosely install the front subframe front mount retaining bolt.

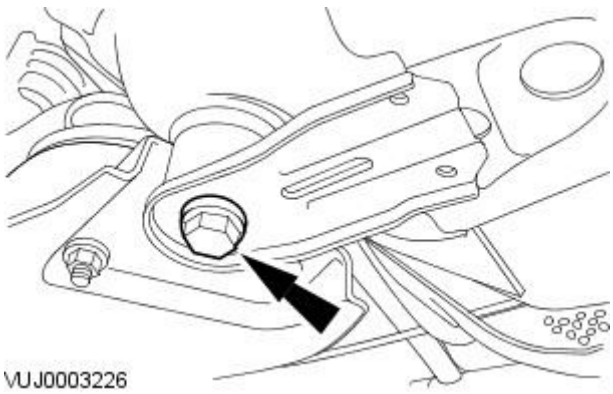

11. NOTE: Left-hand shown, right-hand similar.

Loosely install the front subframe rear mount retaining bolts.

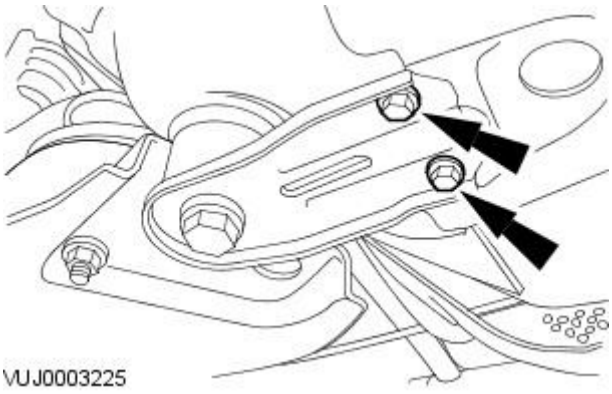

12. NOTE: Left-hand shown, right-hand similar.

Loosely install the front subframe reinforcement plate retaining bolts.

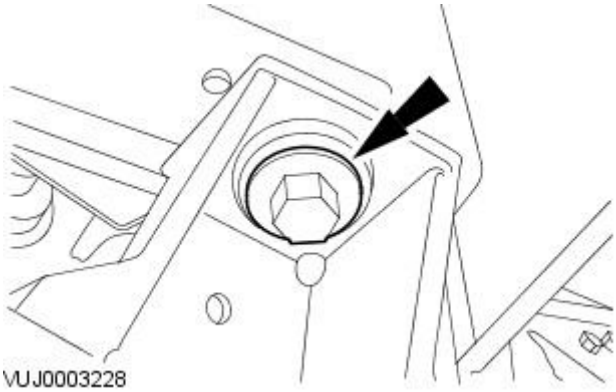

13. NOTE: Right-hand shown, left-hand similar.

Tighten to 142 Nm.

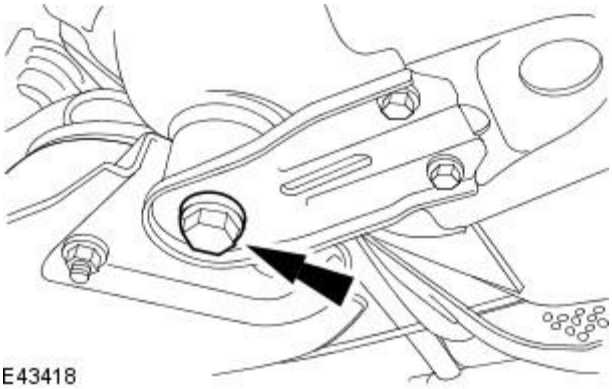

14. NOTE: Left-hand shown, right-hand similar.

Tighten to 142 Nm.

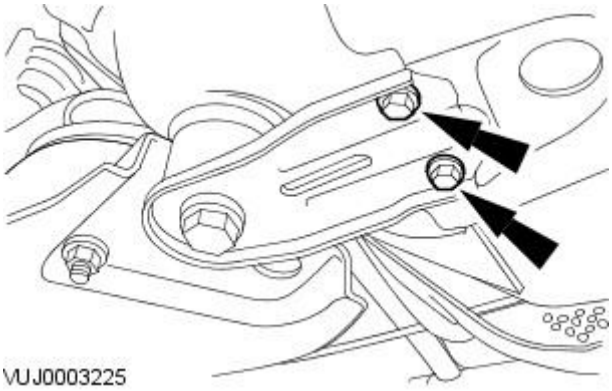

15. NOTE: Left-hand shown, right-hand similar.

Tighten the front subframe reinforcement bolts.

- M8 to 35 Nm.
- M10 to 70 Nm.

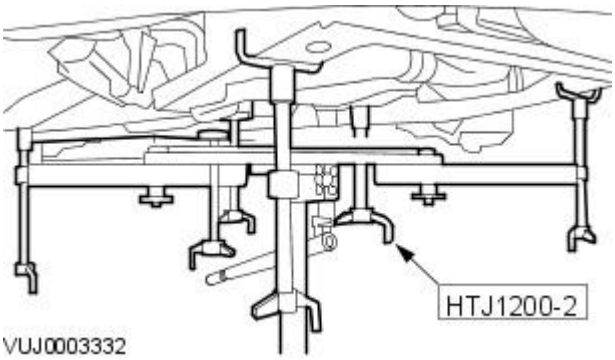

16. Remove the special tool.

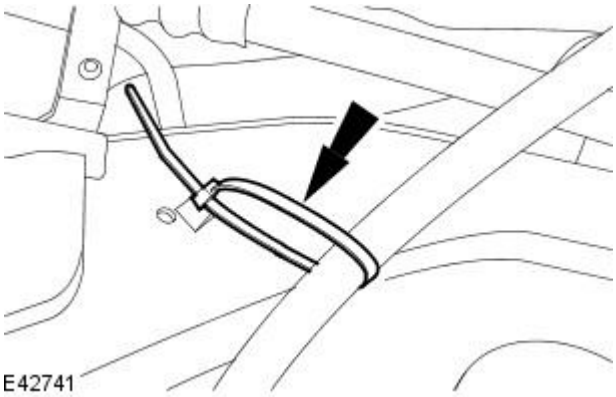

17. Attach the selector cable.

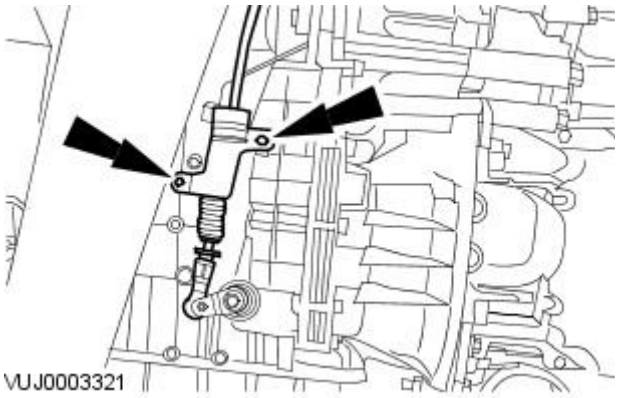

18. Connect the selector cable.

- Tighten to 10 Nm.

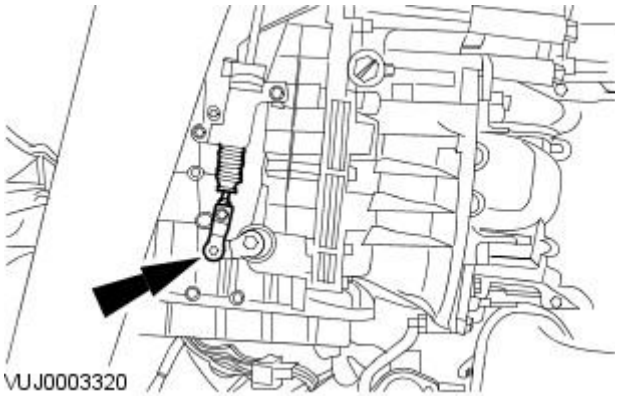

19. Attach the selector cable.

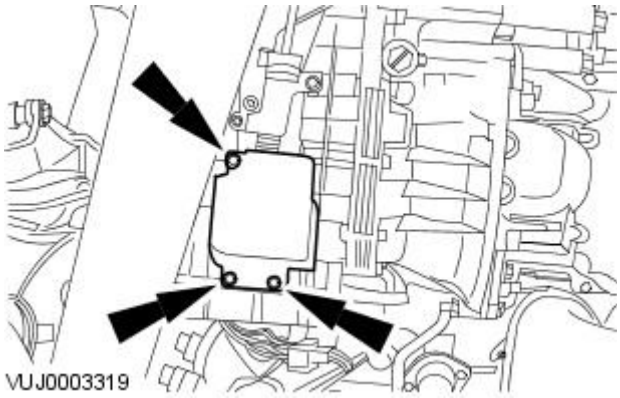

20. Install the selector cable shield.

- Tighten to 10 Nm.

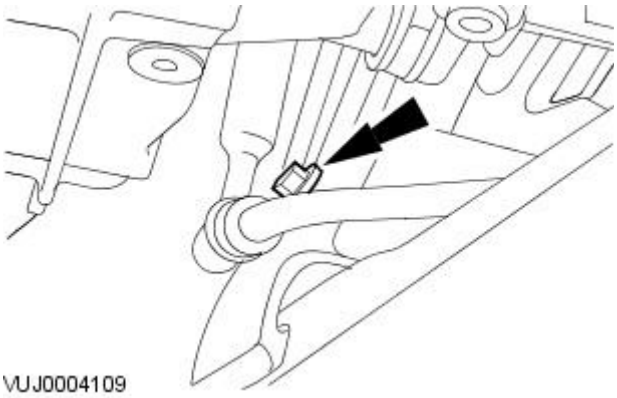

21. Attach the rear of the steering gear cooling pipe.

- Tighten to 7 Nm.

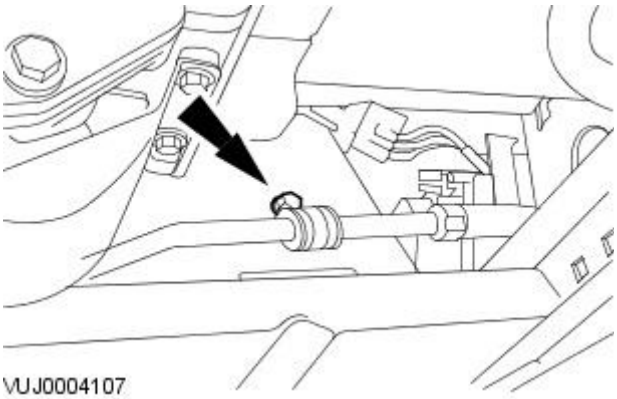

22. Attach the front of the steering gear cooling pipe.

- Tighten to 7 Nm.

Vehicles with high intensity discharge headlamps

23. Connect the high intensity discharge (H.I.D) sensor drop arm.

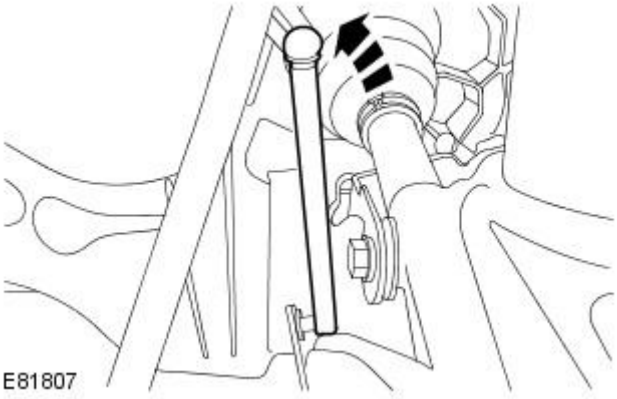

All vehicles

24. NOTE: Left-hand shown, right-hand similar.

Attach the stabilizer bar link arms.

- Tighten to 48 Nm.

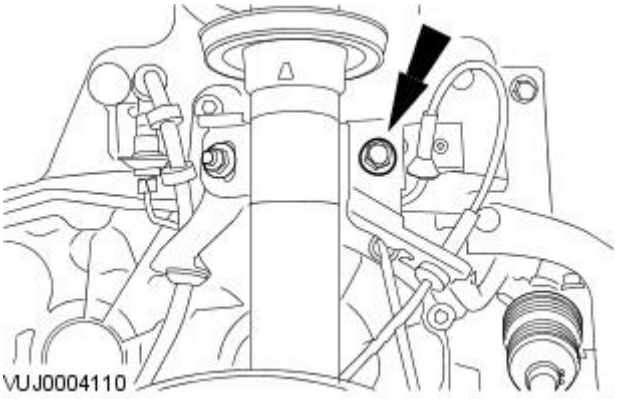

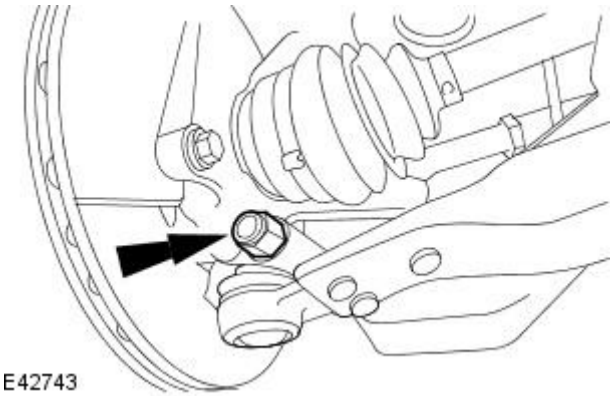

25. NOTE: Right-hand shown, left-hand similar.

Install the lower arm ball joint retaining nut and bolt.

- Tighten to 83 Nm.

26. Install the muffler inlet pipe.
For additional information, refer to: Muffler Inlet Pipe - 2.0L NA V6 - AJV6/2.5L NA V6 - AJV6/3.0L NA V6 - AJ27 (309-00 Exhaust System, Removal and Installation).

27. Cut and remove the tie straps securing the outer casing of the driveshaft universal joint.

- Cut and remove the tie straps securing the driveshaft to the front exhaust hanger.

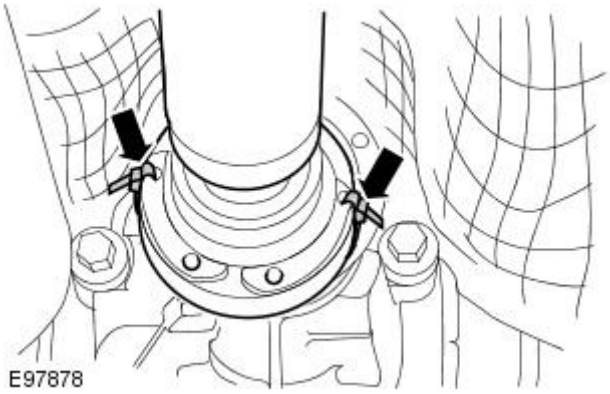

28. Connect the driveshaft to the transfer case.

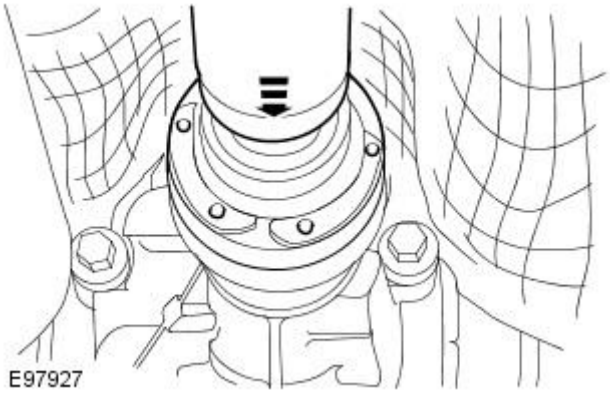

29. CAUTIONS:

INSTALLING A NEW DRIVESHAFT. If a new driveshaft is to be installed, no gasket is required between the driveshaft and the drive pinion flange. Failure to follow this instruction may result in damage to the vehicle.

INSTALLING THE ORIGINAL DRIVESHAFT. If a gasket was removed from between the driveshaft and the drive pinion flange on the driveshaft removal procedure, make sure to install a new gasket. If no gasket was removed from between the driveshaft and the drive pinion flange on the driveshaft removal procedure, a new gasket is not required. Failure to follow this instruction may result in damage to the vehicle.

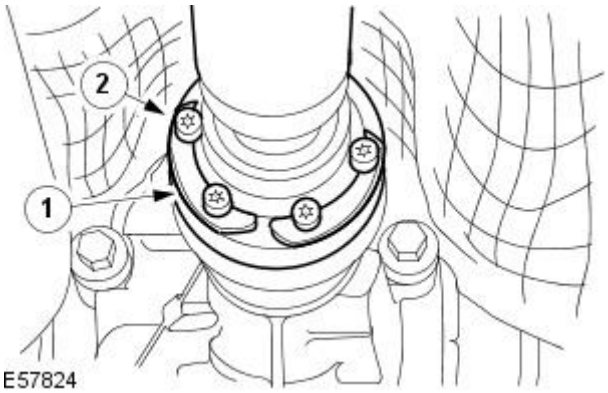

Attach the driveshaft universal joint.

1. Attach the driveshaft universal joint.
2. Install new driveshaft retaining bolt link washers.
3. Install new driveshaft retaining bolts

- Tighten to 44 Nm.

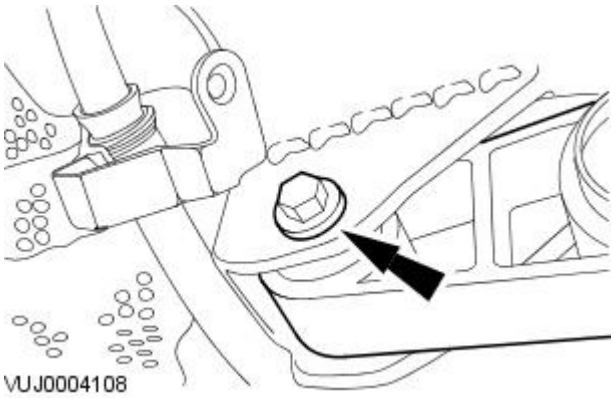

30. Install the engine roll restrictor.

- Install the engine roll restrictor retaining bolt.

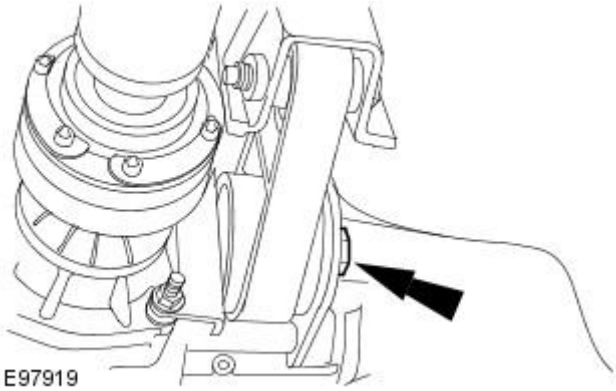

31. Attach the engine roll restrictor.

- Tighten to 80 Nm

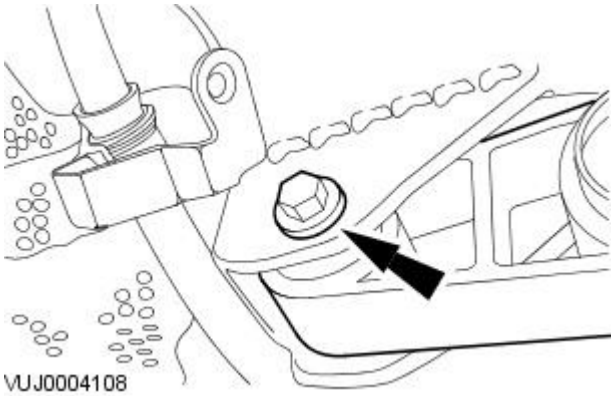

32. Tighten to 80 Nm.

33. Install the radiator splash shield.
For additional information, refer to: Radiator Splash Shield (501-02 Front End Body Panels, Removal and Installation).

34. Install the front wheels and tires.
For additional information, refer to: Wheel and Tire (204-04 Wheels and Tires, Removal and Installation).

35. Install the front muffler.
For additional information, refer to: Front Muffler - 2.0L NA V6 - AJV6/2.5L NA V6 - AJV6/3.0L NA V6 - AJ27 (309-00 Exhaust System, Removal and Installation).

Vehicles with 2.5L or 3.0L engine

36. Carry out the front subframe alignment procedure.
For additional information, refer to: Underbody Misalignment Check (502-00 Uni-Body, Subframe and Mounting System, General Procedures).

Vehicles with stability assist

37. Calibrate the steering angle sensor, using the Jaguar approved diagnostic system.

Uni-Body, Subframe and Mounting System - Front Subframe2.0L Duratorq-TDCi/2.2L Duratorq-TDCi (110kW/150PS) - Puma

Removal and Installation

Special Tool(s)	
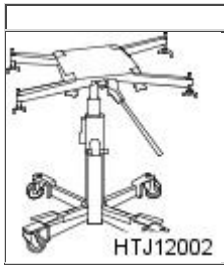 HTJ12002	Powertrain Assembly Jack HTJ1200-2

Removal

All vehicles

1. Remove the wheels and tires.
   For additional information, refer to: Wheel and Tire (204-04 Wheels and Tires, Removal and Installation).
2. Remove the radiator splash shield.
   For additional information, refer to: Radiator Splash Shield (501-02 Front End Body Panels, Removal and Installation).
3. Remove the exhaust flexible pipe.
   For additional information, refer to: Exhaust Flexible Pipe - 2.0L Duratorq-TDCi/2.2L Duratorq-TDCi (110kW/150PS) - Puma (309-00 Exhaust System, Removal and Installation).
4. NOTE: Right-hand shown, left-hand similar.

   Remove the wheel arch liner access cover.

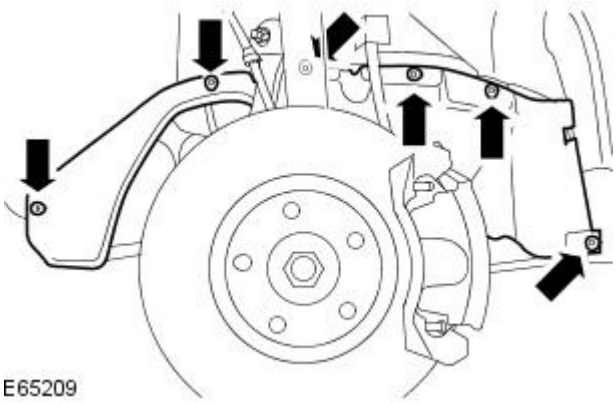
E65209

5. NOTE: Right-hand shown, left-hand similar.

   Remove the lower arm ball joint nut and bolt.

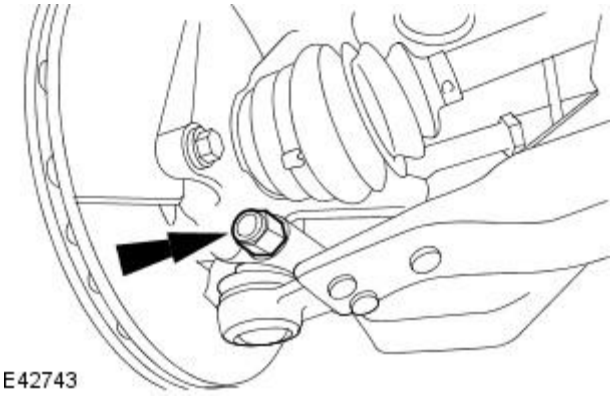
E42743

6. NOTE: Left-hand shown, right-hand similar.

   Detach the stabilizer bar link arms.

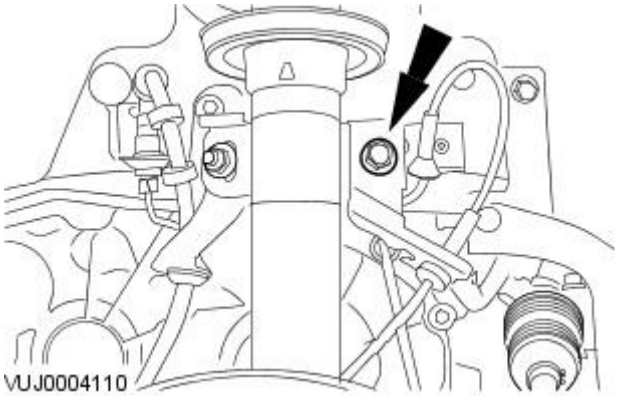
VUJ0004110

Vehicles with high intensity discharge headlamps

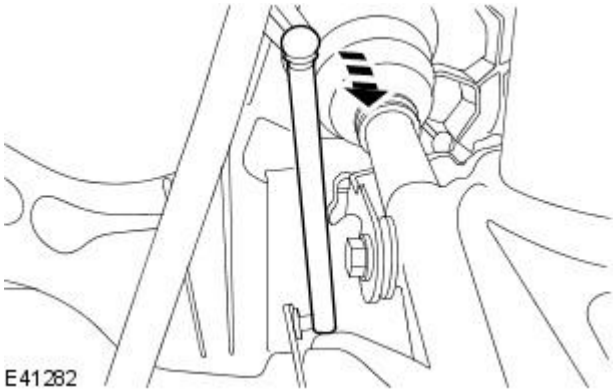

7. Disconnect the high intensity discharge (H.I.D) sensor drop arm.

All vehicles

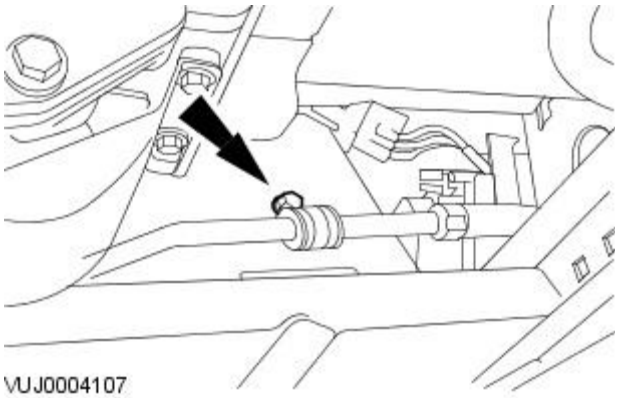

8. Detach the front of the steering gear cooling pipe.

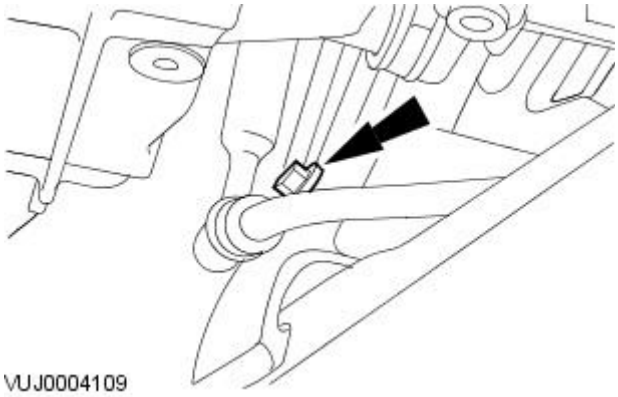

9. Detach the rear of the steering gear cooling pipe.

Vehicles with electric booster heater

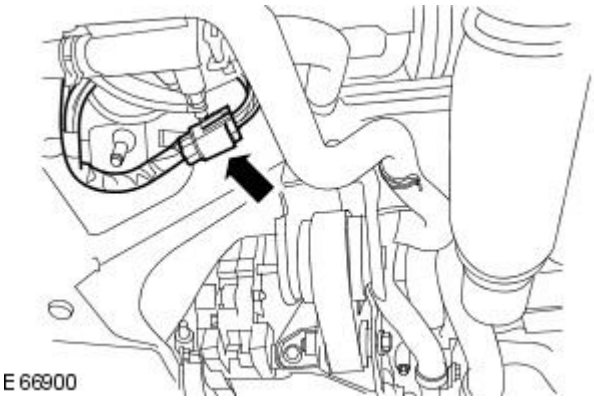

10. Detach the electric booster heater electrical connector from the subframe retaining tang.

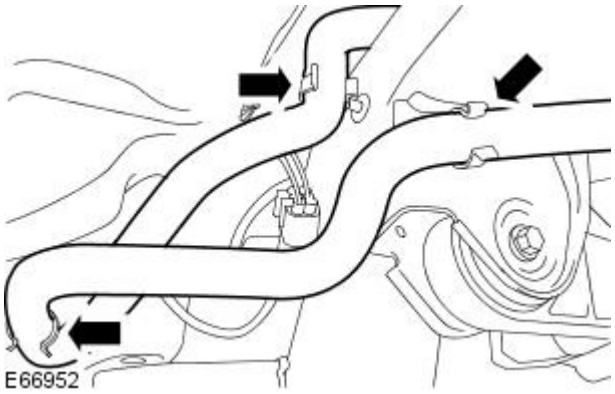

11. Detach the coolant hoses from the retaining clips.

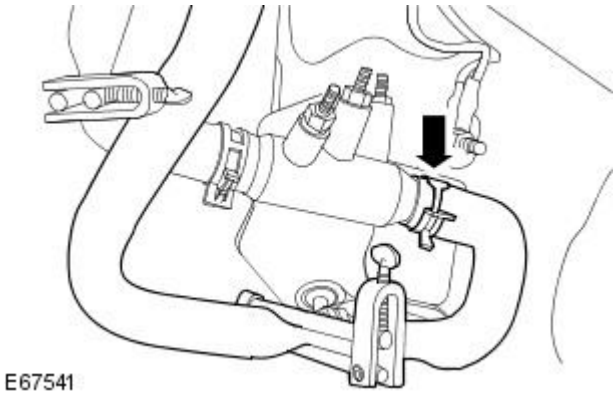

12. NOTE: Clamp the hose to minimize coolant loss.

Detach the coolant hose.

- Disconnect the coolant hose.

Vehicles with fuel fired booster heater

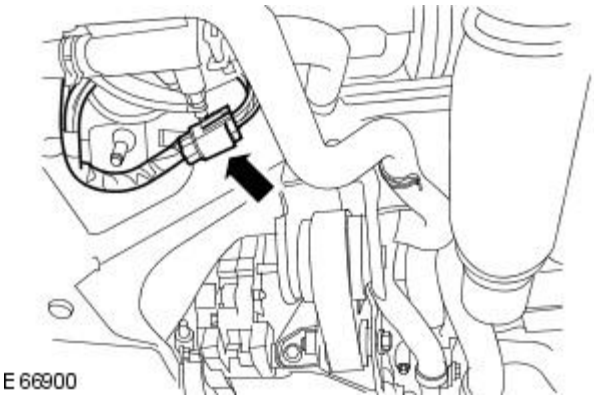

13. Detach the fuel fired booster heater electrical connector from the subframe retaining tang.

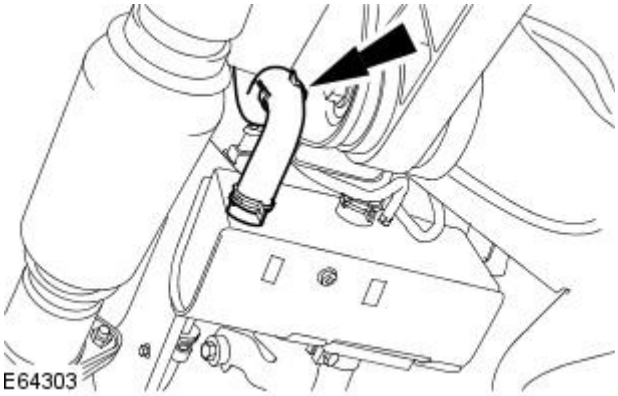

14. Detach the coolant hose.

All vehicles

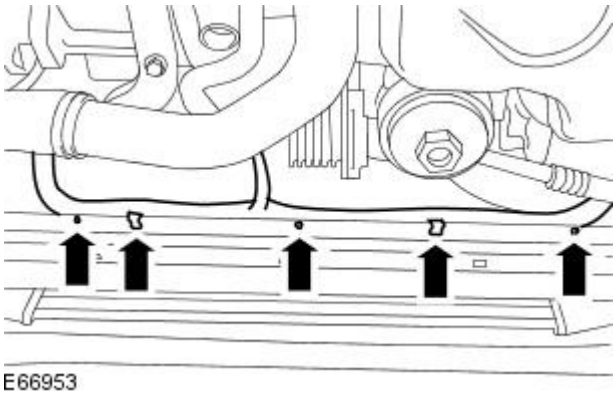

15. Detach the wiring harness.

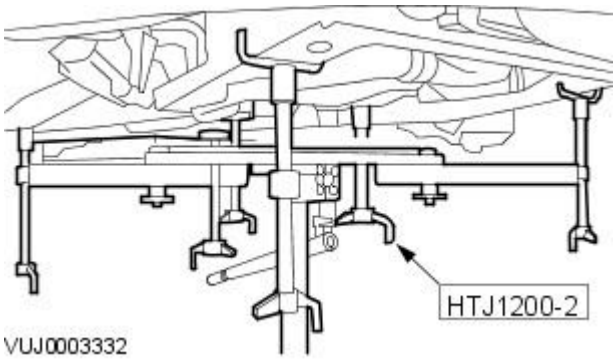

16. Install the special tool.

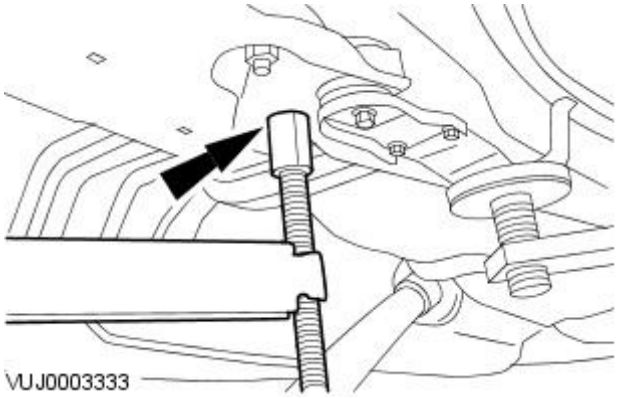

17. NOTE: Left-hand shown, right-hand similar.

Position and adjust the special tool rear height adjuster.

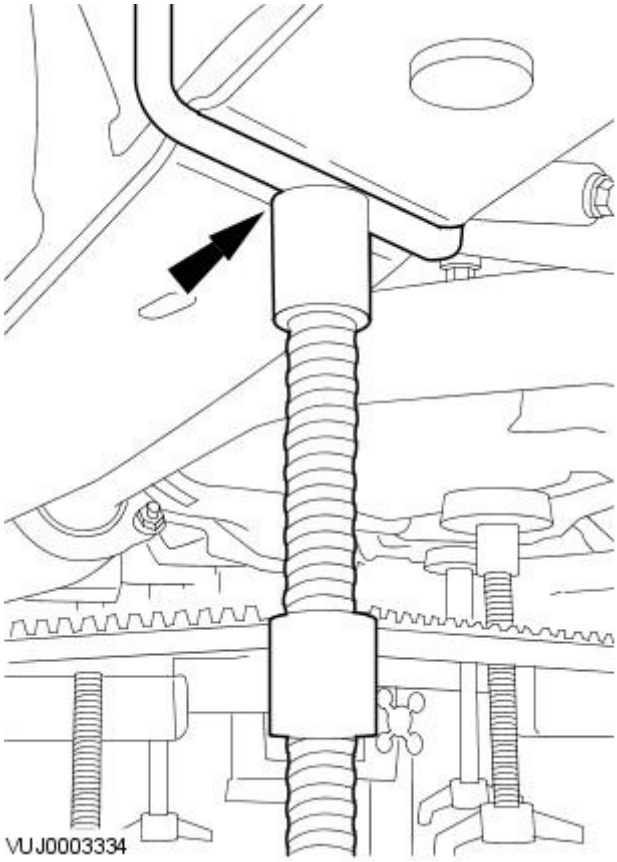

18. NOTE: Right-hand shown, left-hand similar.

Position and adjust the special tool front height adjuster.

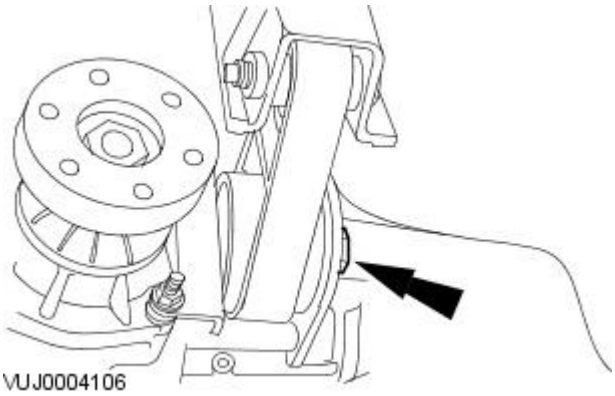

19. Detach the engine roll restrictor.

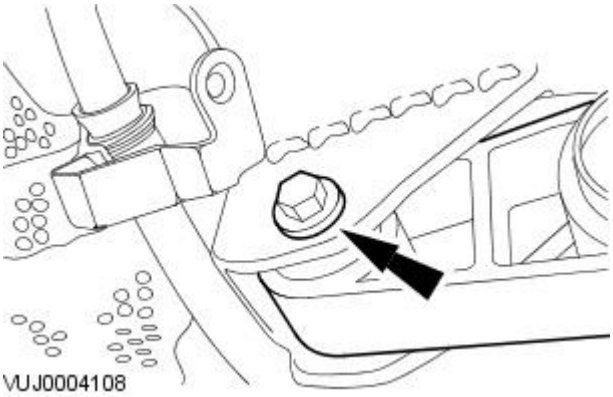

20. Remove the engine roll restrictor.

- Remove the roll restrictor retaining bolt.

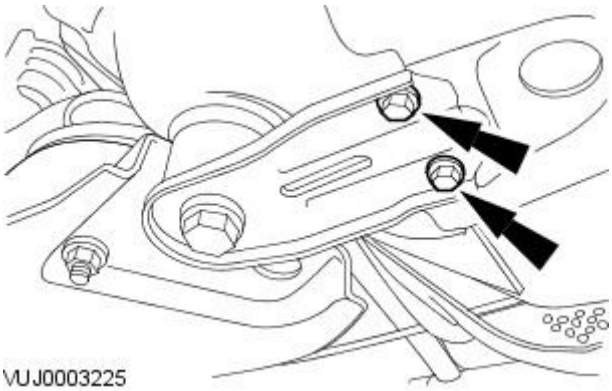

21. NOTE: Left-hand shown, right-hand similar.

Remove the front subframe reinforcement plate retaining bolts.

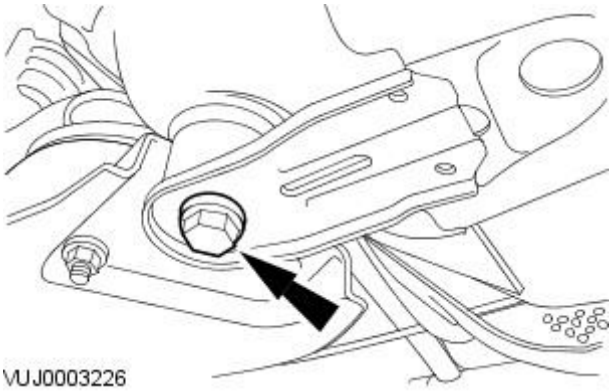

22. NOTE: Left-hand shown, right-hand similar.

Remove the front subframe rear mount retaining bolts.

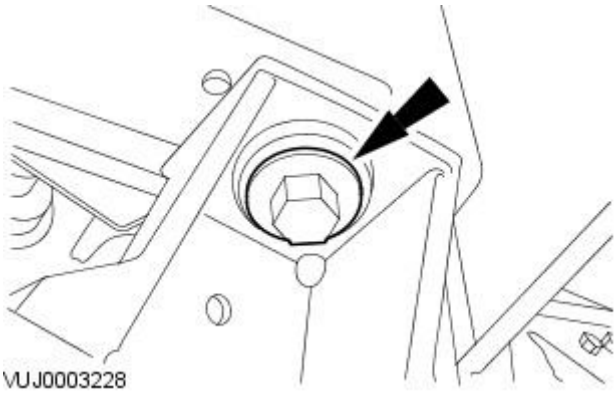

23. NOTE: Right-hand shown, left-hand similar.

Remove the front subframe front mount retaining bolts.

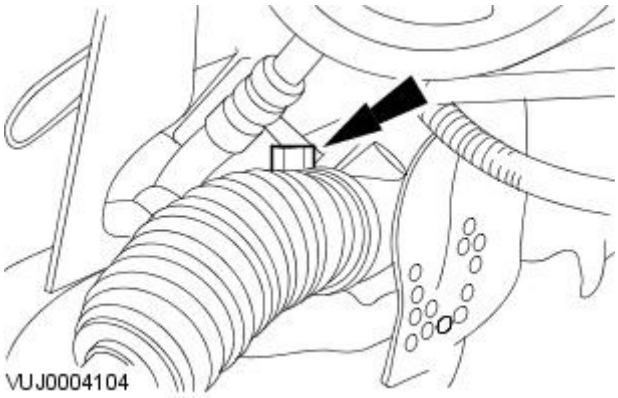

24. Detach the right-hand side of the steering gear.

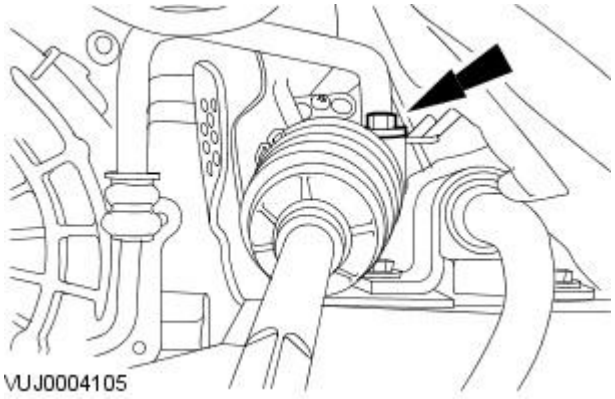

25. Detach the left-hand side of the steering gear.

26. Using suitable securing straps, secure the steering gear to the vehicle body.

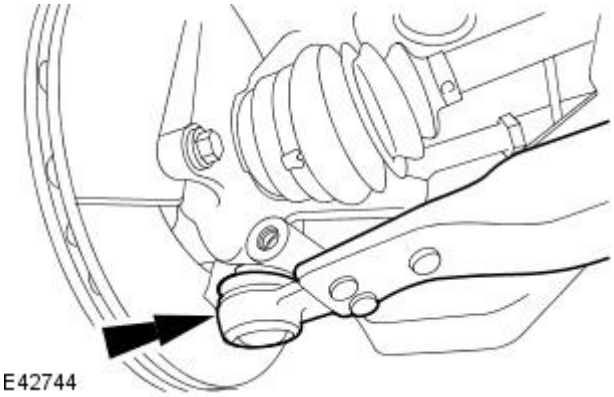

27. CAUTION: To prevent damage to the lower arm bushing, detach the lower arm ball joint as the subframe is being lowered. Failure to follow this instruction may result in damage to the vehicle.

• NOTE: Right-hand shown, left-hand similar.

Detach the lower arm.

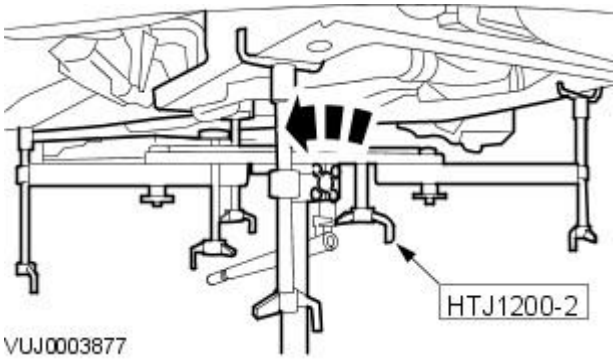

28. WARNING: Rotate the special tool height adjustment valve slowly. Failure to follow this instruction may result in personal injury.

Remove the subframe.

- Rotate the special tool height adjustment valve counter clockwise.
- Lower the special tool.

Installation

All vehicles

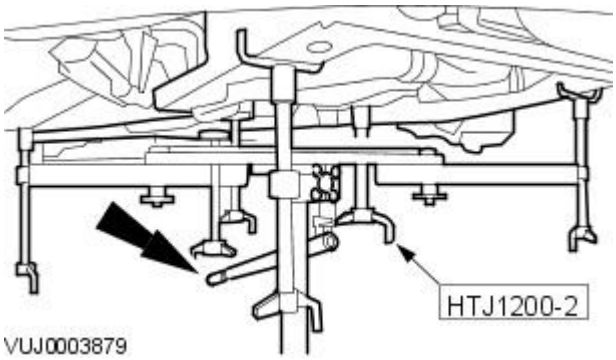

1. WARNING: Raise the special tool platform slowly. Failure to follow this instruction can result in personal injury.

Install the subframe.

- Raise the special tool platform.

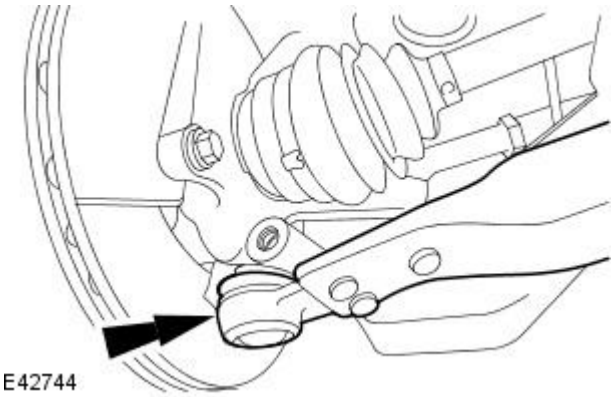

2. CAUTION: To prevent damage to the lower arm bushing, attach the lower arm ball joint as the subframe is being raised. Failure to follow this instruction may result in damage to the vehicle.

• NOTE: Right-hand shown, left-hand similar.

Attach the lower arm.

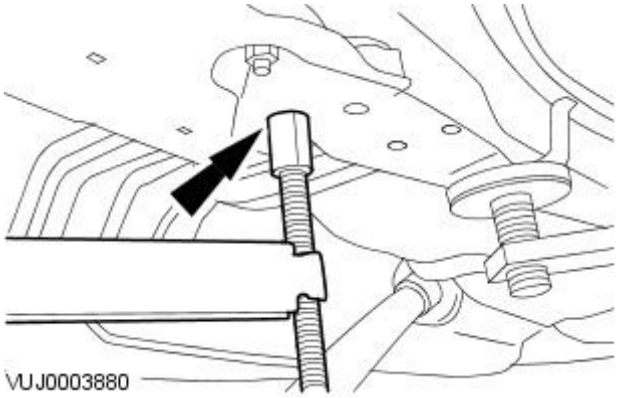

3. NOTE: Left-hand shown, right-hand similar.

Make sure the special tool rear height adjuster aligns into the locating hole in the vehicle floor pan.

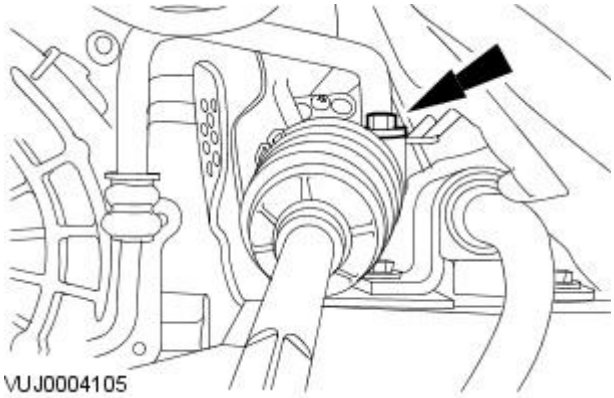

4. Remove the steering gear securing straps.

5. Attach the left-hand side of the steering gear.

- Tighten to 133 Nm.

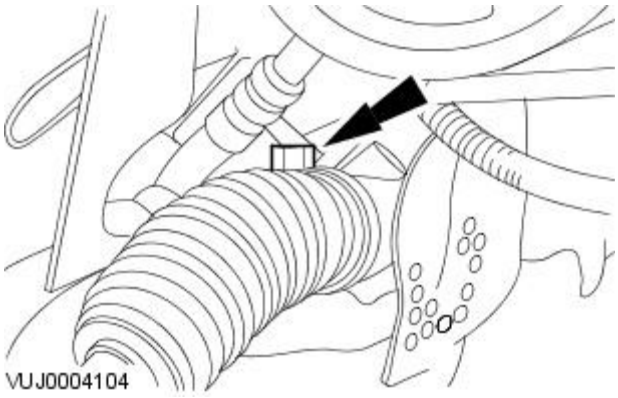

6. Attach the right-hand side of the steering gear.

- Tighten to 133 Nm.

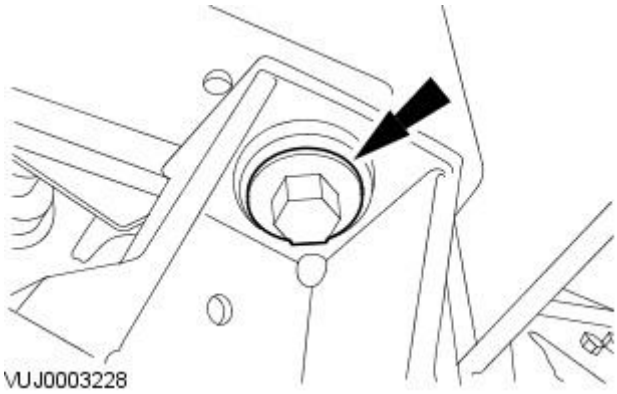

7. NOTE: Right-hand shown, left-hand similar.

Loosely install the front subframe front mount retaining bolt.

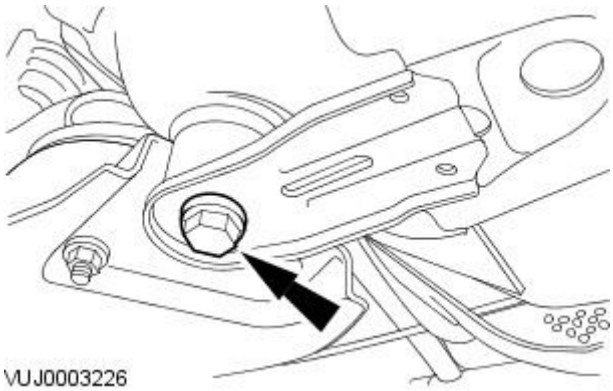

8. NOTE: Left-hand shown, right-hand similar.

Loosely install the front subframe rear mount retaining bolts.

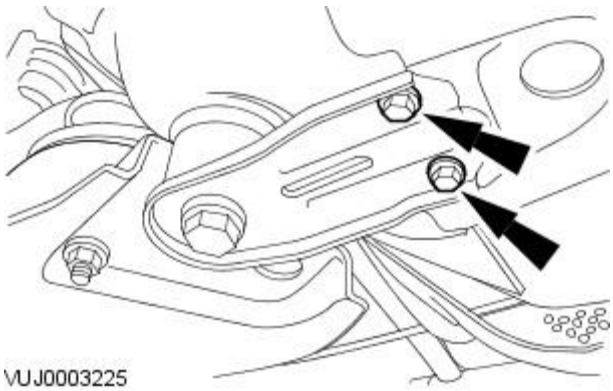

9. NOTE: Left-hand shown, right-hand similar.

Loosely install the front subframe reinforcement plate retaining bolts.

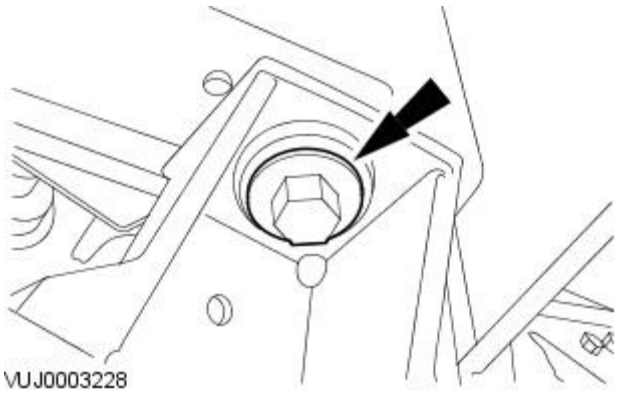

10. NOTE: Right-hand shown, left-hand similar.

Tighten to 142 Nm.

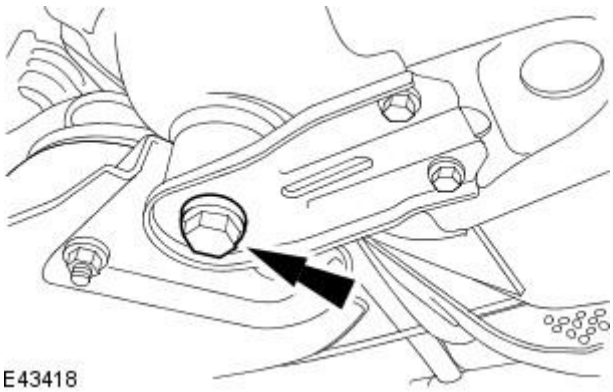

11. NOTE: Left-hand shown, right-hand similar.

Tighten to 142 Nm.

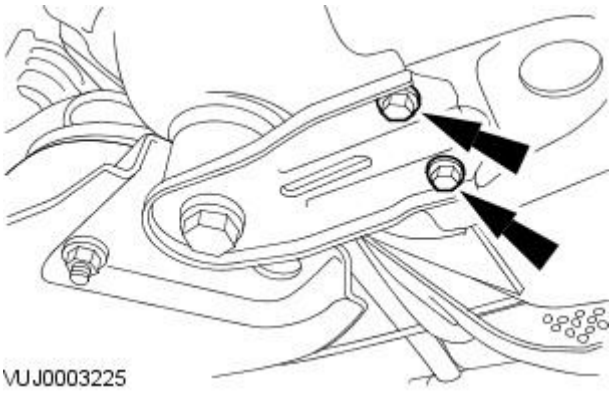

12. NOTE: Left-hand shown, right-hand similar.

Tighten the front subframe reinforcement bolts.

- M8 to 35 Nm.
- M10 to 70 Nm.

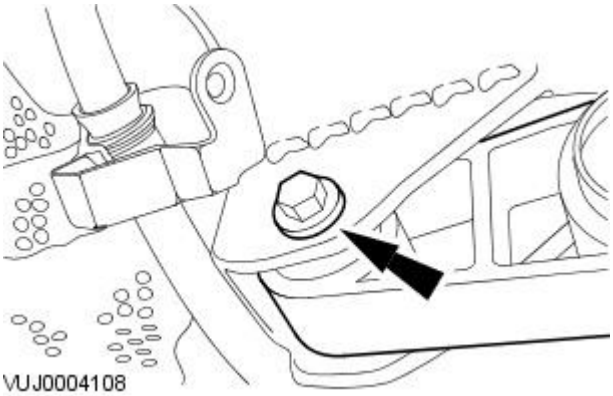

13. Install the engine roll restrictor.

- Tighten to 80 Nm.

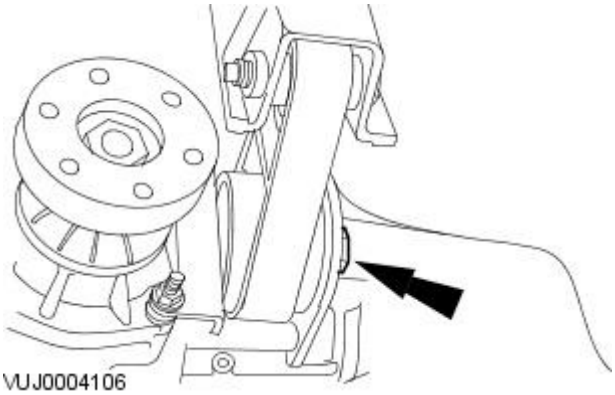

14. Attach the engine roll restrictor.

- Tighten to 80 Nm.

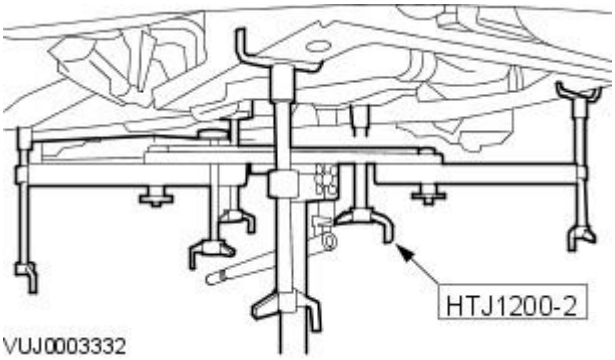

15. Remove the special tool.

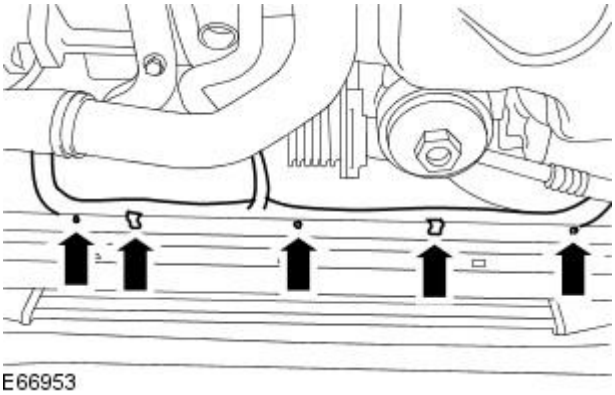

16. Attach the wiring harness.

Vehicles with fuel fired booster heater

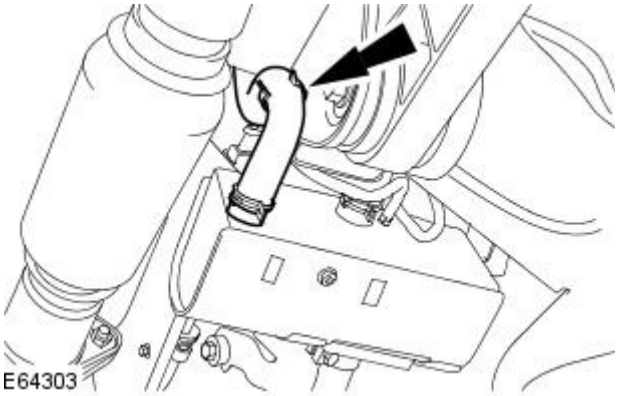

17. Attach the coolant hose.

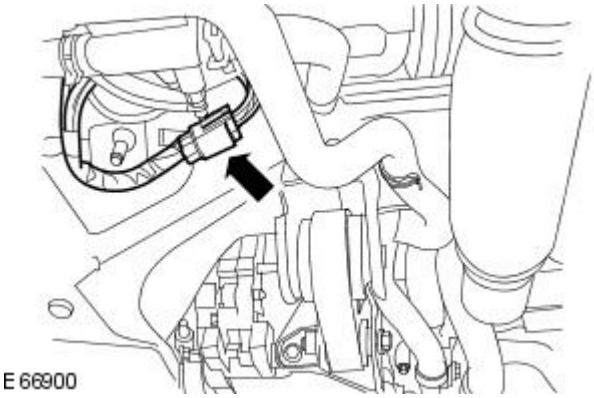

18. Attach the fuel fired booster heater electrical connector to the subframe retaining tang.

Vehicles with electric booster heater

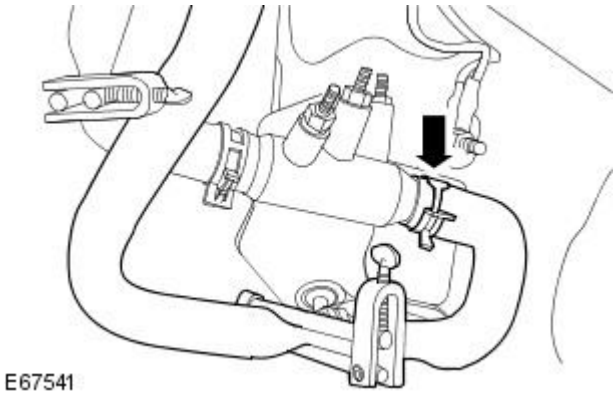

19. Attach the coolant hose.

- Remove the hose clamp.

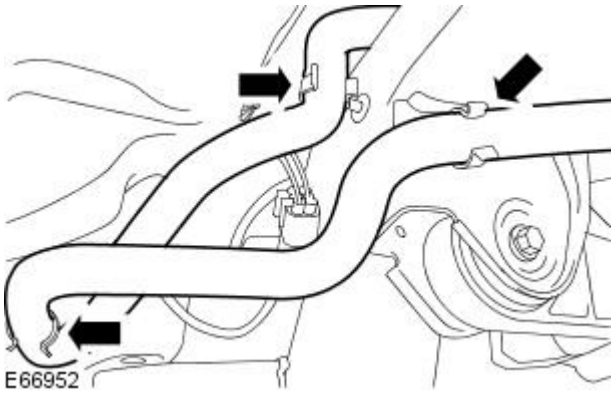

20. Attach the coolant hoses from the retaining clips.

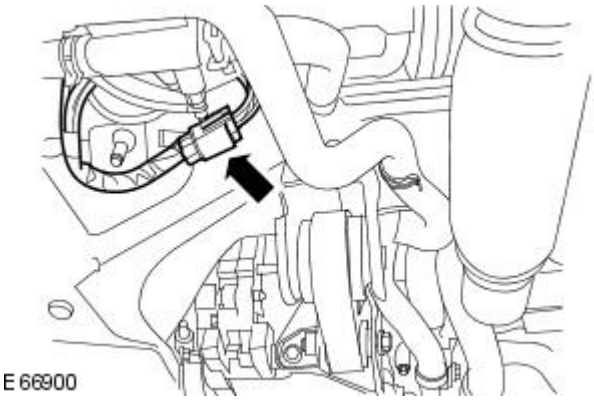

21. Attach the electric booster heater electrical connector to the subframe retaining tang.

All vehicles

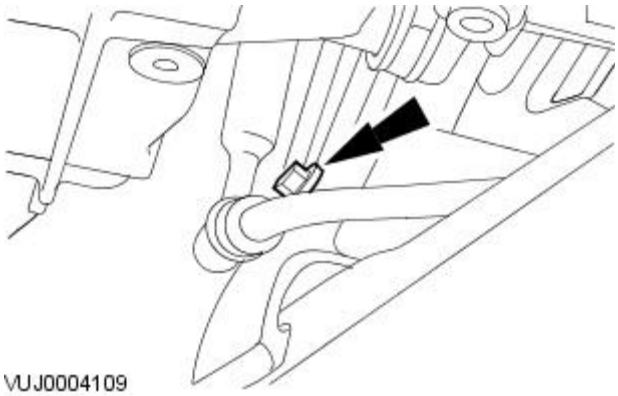

22. Attach the rear of the steering gear cooling pipe.

- Tighten to 7 Nm.

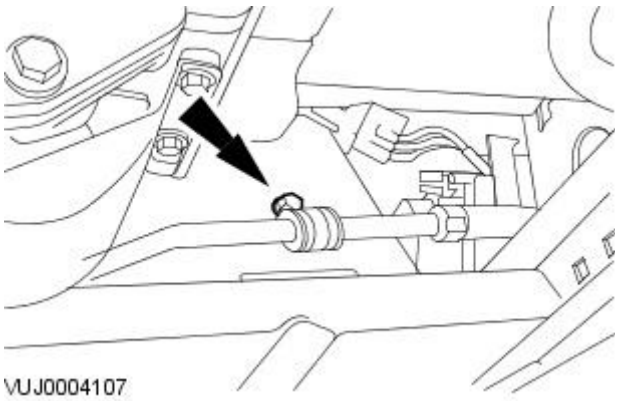

23. Attach the front of the steering gear cooling pipe.

- Tighten to 7 Nm.

Vehicles with high intensity discharge headlamps

24. Connect the high intensity discharge (H.I.D) sensor drop arm.

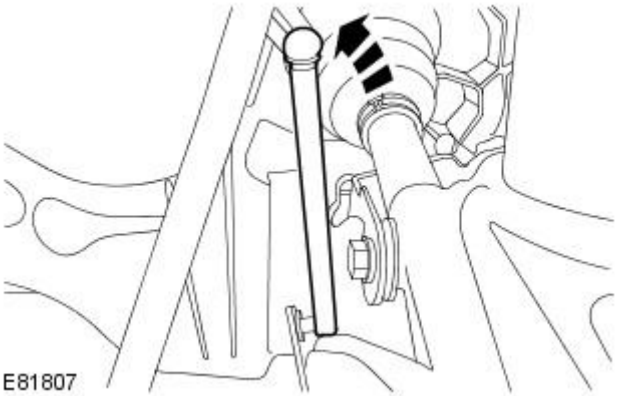

All vehicles

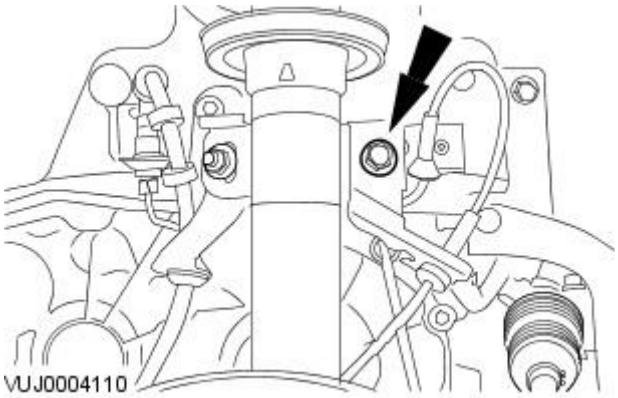

25. NOTE: Left-hand shown, right-hand similar.

Attach the stabilizer bar link arms.

- Tighten to 48 Nm.

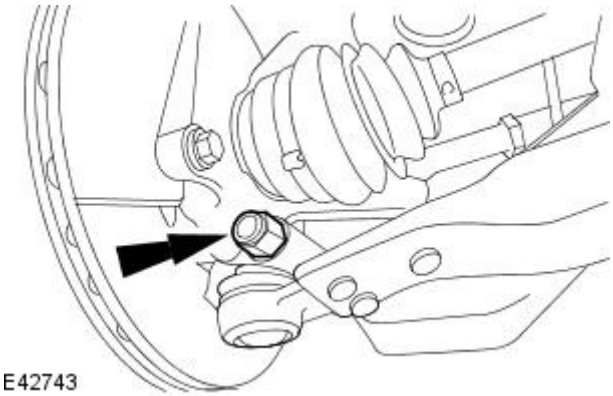

26. NOTE: Right-hand shown, left-hand similar.

Install the lower arm ball joint retaining nut and bolt.

- Tighten to 83 Nm.

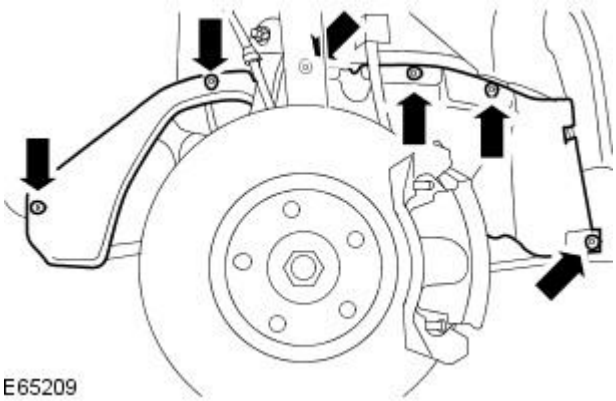

27. NOTE: Right-hand shown, left-hand similar.

Install the wheel arch liner access cover.

28. Install the exhaust flexible pipe.
For additional information, refer to: Exhaust Flexible Pipe - 2.0L Duratorq-TDCi/2.2L Duratorq-TDCi (110kW/150PS) - Puma (309-00 Exhaust System, Removal and Installation).

29. Install the radiator splash shield.
For additional information, refer to: Radiator Splash Shield (501-02 Front End Body Panels, Removal and Installation).

30. Install the wheels and tires.
For additional information, refer to: Wheel and Tire (204-04 Wheels and Tires, Removal and Installation).

Vehicles with stability assist

31. Calibrate the steering angle sensor, using the Jaguar approved diagnostic system.

Uni-Body, Subframe and Mounting System - Front Subframe Front Bushing

Removal and Installation

Special Tool(s)	
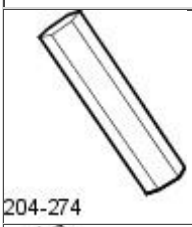 204-274	Adaptor nut 204-274
204-275	Forcing screw 204-275
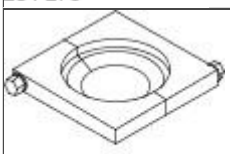 204-305	Support 204-305
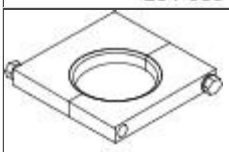 204-306	Installer guide 204-306
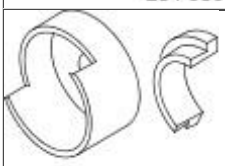 204-307	Receiver cup 204-307
204-308	Bush remover/installer 204-308
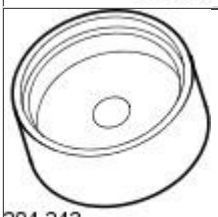 204-243	Bush remover/installer 204-243
JAG-061	Thrust bearing JAG-061

Removal

1. Remove the front subframe
   For additional information, refer to: Front Subframe - 2.0L Duratorq-TDCi/2.2L Duratorq-TDCi (110kW/150PS) - Puma (502-00 Uni-Body, Subframe and Mounting System, Removal and Installation).

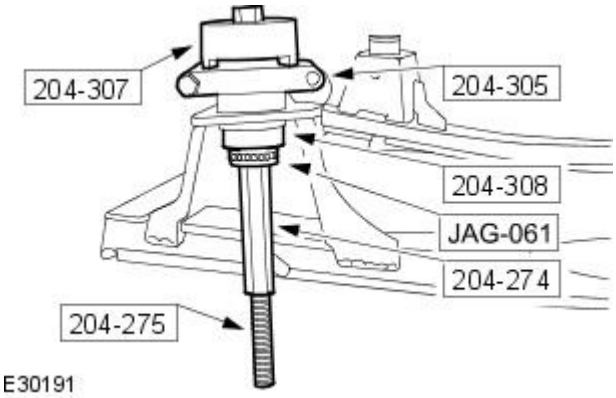

2. NOTE: Note the orientation of the bushing before removal.

Using the special tools, remove the front subframe mounting bushing.

Installation

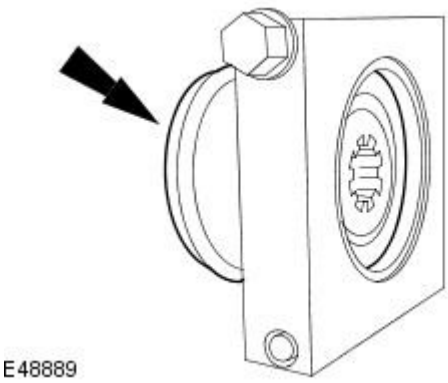

1. Fit the bushing to the special tool.

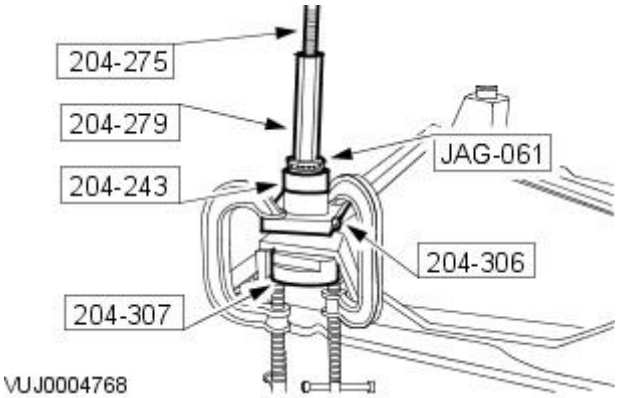

2. NOTE: Apply a suitable amount of Shell gravex oil 973 to the bushing before installation.

• NOTE: Make sure the bushing is correctly orientated.

Using the special tools, engage the bushing into the subframe.

- Using suitable clamps, secure the special tool to the subframe.

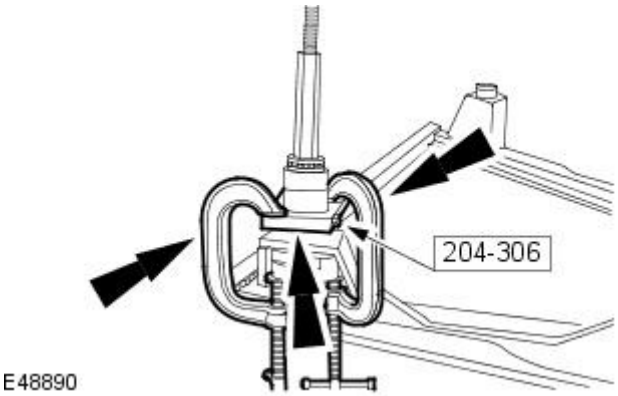

3. Remove the securing clamps and the special tool.

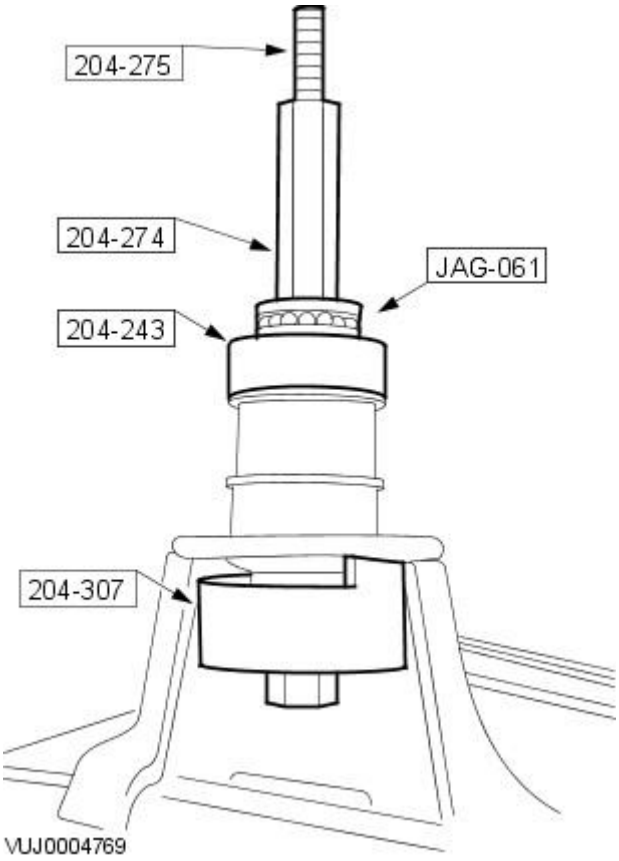

4. Using the special tools, fully engage the bushing into the subframe.

5. Install the front subframe
For additional information, refer to: Front Subframe - 2.0L Duratorq-TDCi/2.2L Duratorq-TDCi (110kW/150PS) - Puma (502-00 Uni-Body, Subframe and Mounting System, Removal and Installation).

Uni-Body, Subframe and Mounting System - Front Subframe Rear Bushing

Removal and Installation

Special Tool(s)	
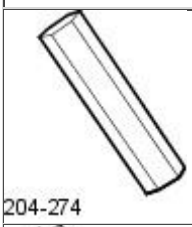 204-274	Adaptor nut 204-274
204-275	Forcing screw 204-275
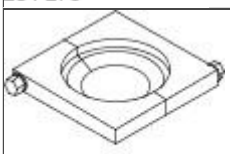 204-305	Support 204-305
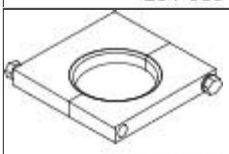 204-306	Installer guide 204-306
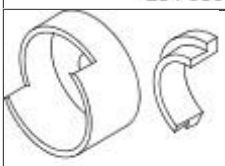 204-307	Receiver cup 204-307
204-308	Bush remover 204-308
204-315	Bush installer 204-315
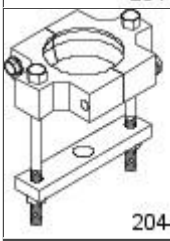 204-319	Installer guide 204-319
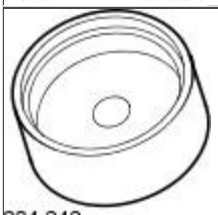 204-243	Bush installer 204-243

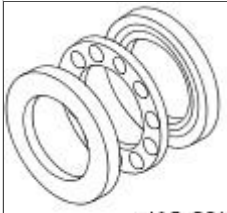 JAG-061	Thrust bearing JAG-061

Removal

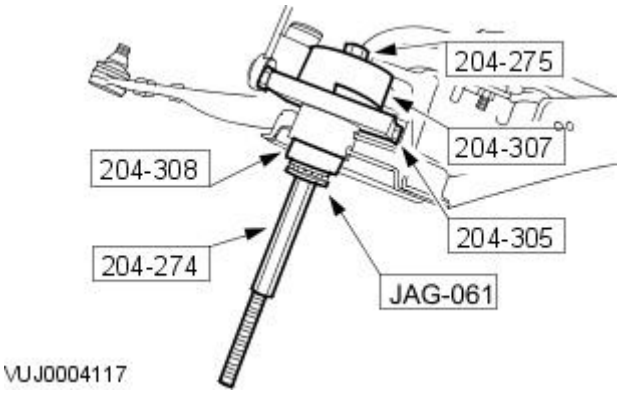

1. Remove the front subframe
For additional information, refer to: Front Subframe - 2.0L Duratorq-TDCi/2.2L Duratorq-TDCi (110kW/150PS) - Puma (502-00 Uni-Body, Subframe and Mounting System, Removal and Installation).

2. NOTE: Note the orientation of the bushing before removal.

Using the special tools, remove the front subframe mounting bushing.

Installation

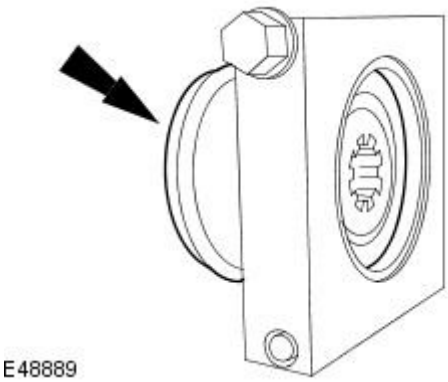

1. Fit the bushing to the special tool.

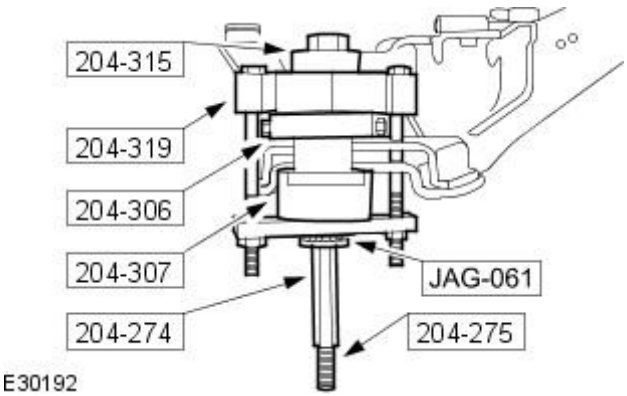

2. CAUTION: Make sure excessive pressure is not used when installing the bushing. Failure to follow these instructions may result in damage to the subframe.

• NOTE: Apply a suitable amount of Shell gravex oil 973 to the bushing before installing.

• NOTE: Make sure the bushing is correctly orientated.

Using the special tools, partially install the bushing.

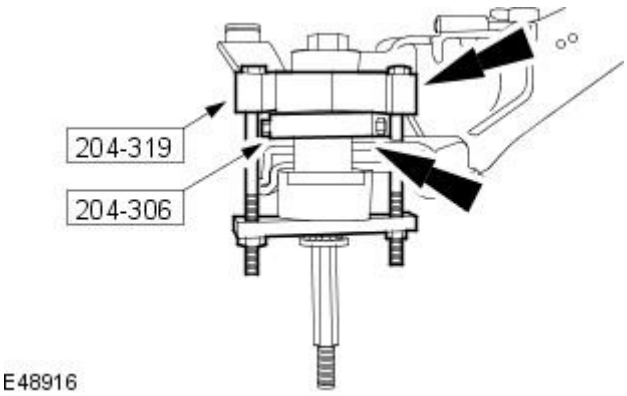

3. Remove the special tools.

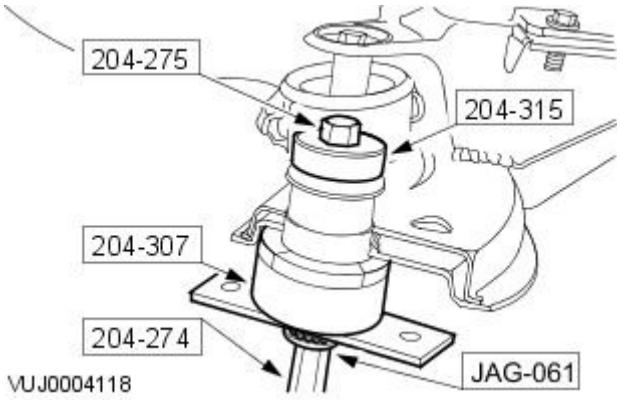

4. Using the special tools, fully seat the bushing.

5. Install the front subframe
For additional information, refer to: Front Subframe - 2.0L Duratorq-TDCi/2.2L Duratorq-TDCi (110kW/150PS) - Puma (502-00 Uni-Body, Subframe and Mounting System, Removal and Installation).

Uni-Body, Subframe and Mounting System - Rear Axle Crossmember Bushing

Removal and Installation

Special Tool(s)	
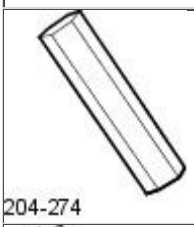 204-274	Forcing nut 204-274
204-275	Forcing screw 204-275
204-299	Support cup 204-299
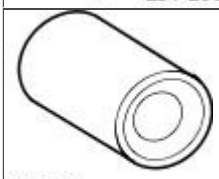 204-271	Bush remover 204-271
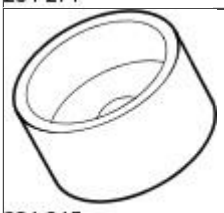 204-245	Bush installer 204-245

Removal

1. Remove the drive differential. For additional information, refer to Section 205-02 Rear Drive Axle/Differential .
2. Detach the damper.
   - Left-hand side shown, right-hand side similar.

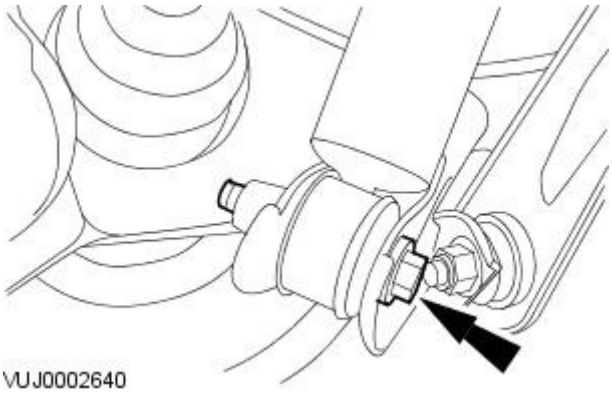

3. Detach the wheel knuckle mounting bracket.

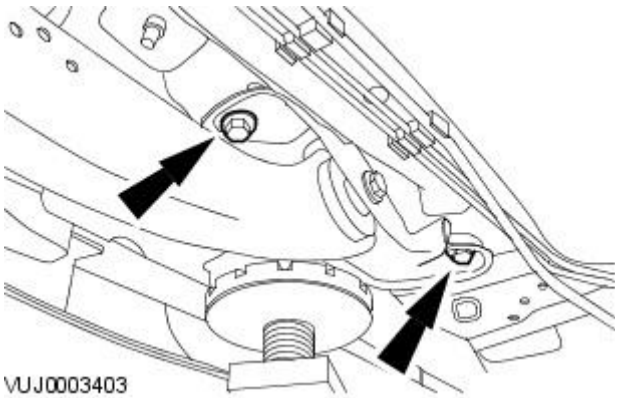

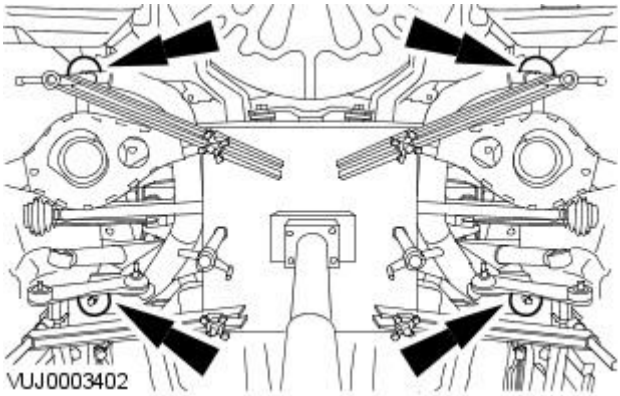

4. Loosen the rear subframe mounting retaining bolts.

- Left-hand side shown, right-hand side similar.

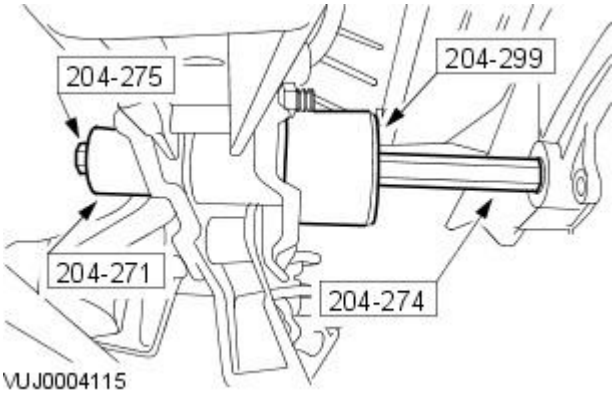

5. Using the special tools, remove the rear axle crossmember bush.

Installation

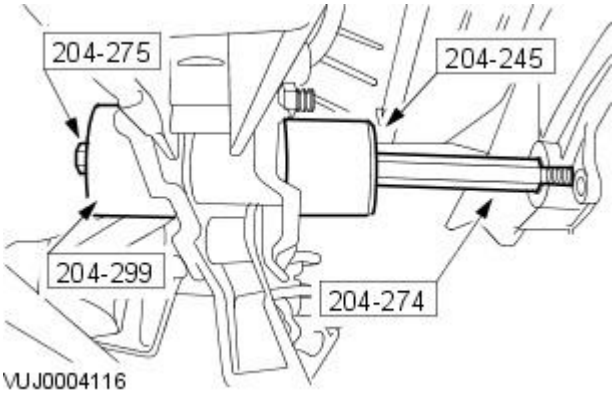

1. Using the special tools, install the rear axle crossmember bush.

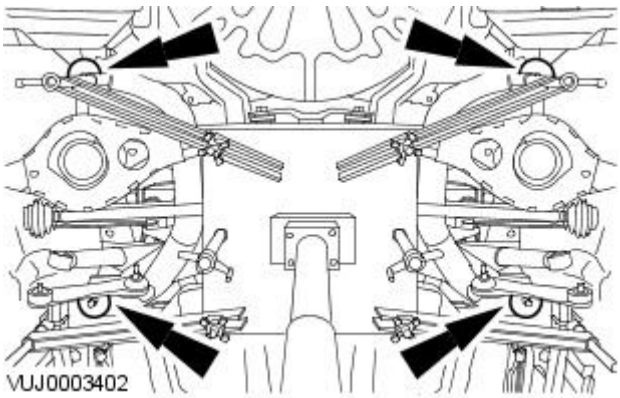

2. NOTE: The final tightening of the suspension components must be carried out with the vehicle on its wheels.

Tighten to 126 Nm.

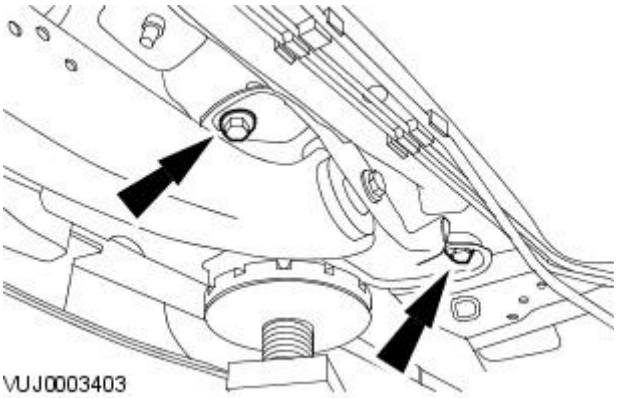

3. NOTE: The final tightening of the suspension components must be carried out with the vehicle on its wheels.

Tighten to 126 Nm.

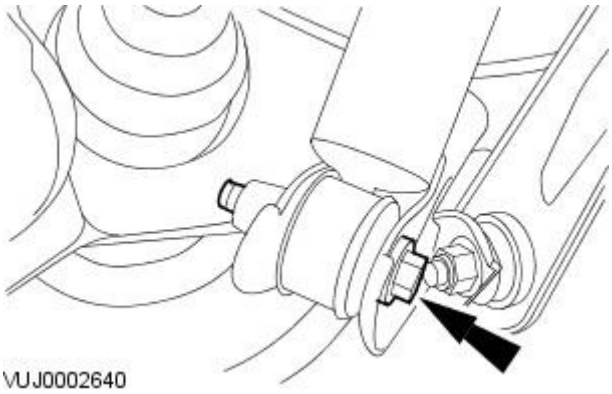

4. NOTE: The final tightening of the suspension components must be carried out with the vehicle on its wheels.

Tighten to 130 Nm.

5. Install the drive differential. For additional information, refer to Section 205-02 Rear Drive Axle/Differential .

6. Carry out the rear subframe alignment procedure. For additional information, refer to Underbody Misalignment Check .

Uni-Body, Subframe and Mounting System - Rear Subframe

Removal and Installation

Special Tool(s)	
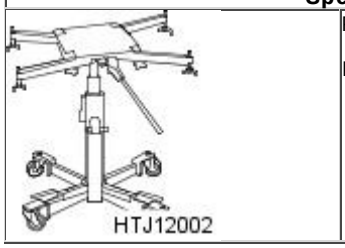 HTJ12002	Powertrain Assembly Jack HTJ1200-2

Removal

All vehicles

1. Remove the wheels and tires.For additional information, refer to: Wheel and Tire (204-04 Wheels and Tires, Removal and Installation).

Vehicles with 2.5L or 3.0L engine

2. Remove the driveshaft.For additional information, refer to: Driveshaft (205-01 Driveshaft, Removal and Installation).

All vehicles

3. Remove the front muffler.For additional information, refer to: (309-00 Exhaust System)

   Front Muffler - 2.0L Duratorq-TDCi/2.2L Duratorq-TDCi (110kW/150PS) - Puma (Removal and Installation),
   Front Muffler - 2.0L NA V6 - AJV6/2.5L NA V6 - AJV6/3.0L NA V6 - AJ27 (Removal and Installation).

4. NOTE: Left-hand shown, right-hand similar.

• NOTE: 2.5L and 3.0L shown,2.0L similar.

Detach the rear muffler exhaust hanger insulators.

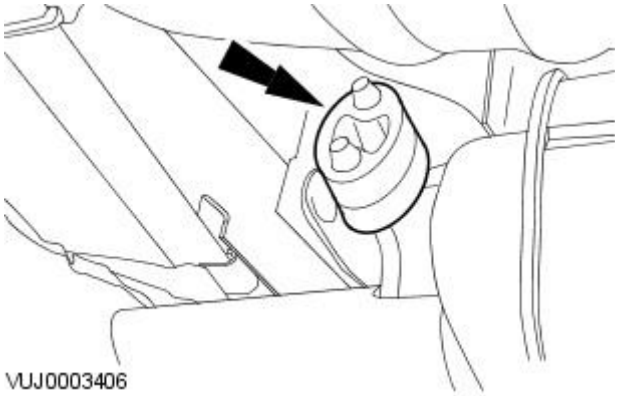

5. NOTE: Left-hand shown, right-hand similar.

Detach the rear parking brake cables.

1. Release the tension.
2. Detach the rear parking brake cables.

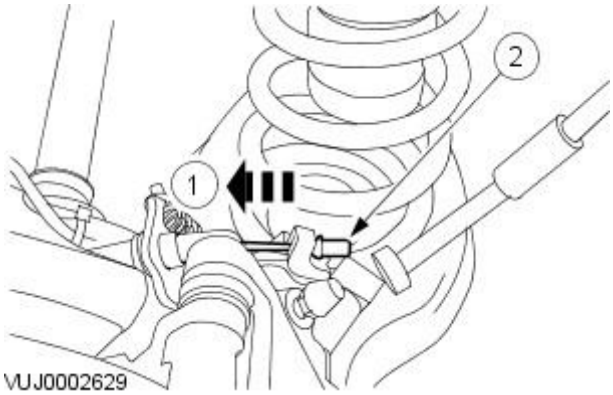

6. NOTE: Left-hand shown, right-hand similar.

Detach the parking brake cables and conduits.

1. Release the parking brake conduit retaining tangs.
2. Detach the parking brake cables and conduits.

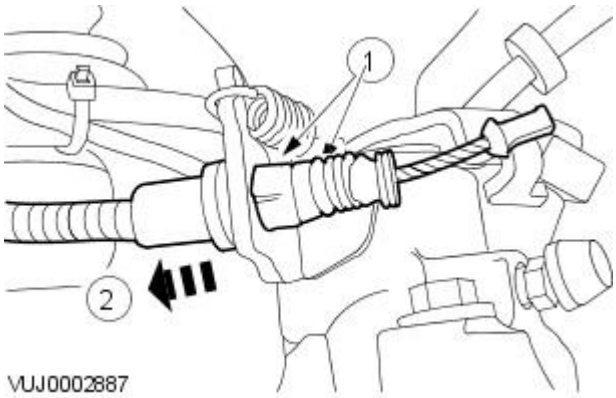

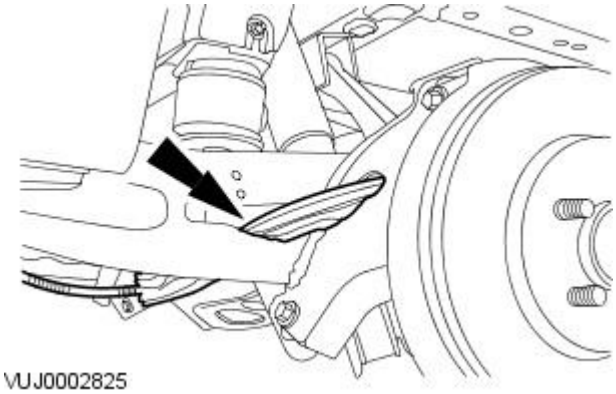

7. NOTE: Left-hand shown, right-hand similar.

Detach the parking brake cables and conduits from the wheel hub carriers.

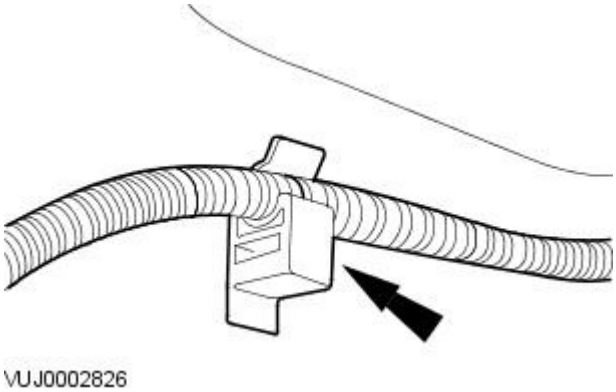

8. NOTE: Left-hand shown, right-hand similar.

Detach the parking brake cables and conduits.

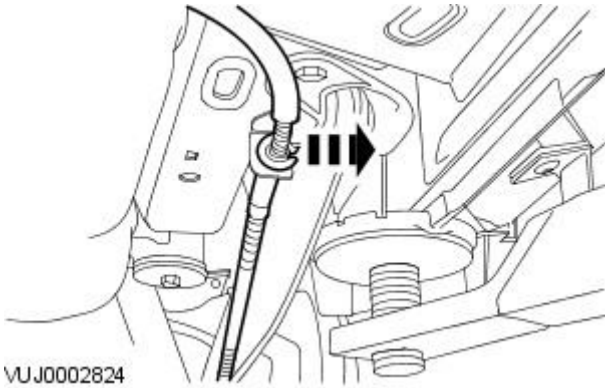

9. NOTE: Right-hand shown, left-hand similar.

Detach the parking brake cables and conduits.

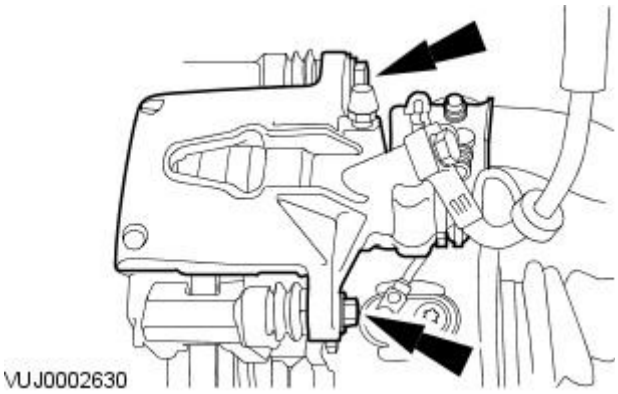

10. NOTE: Left-hand shown, right-hand similar.

• NOTE: 2.5L and 3.0L shown, 2.0L similar.

Detach the brake calipers and secure to one side.

- Remove and discard the brake caliper retaining bolts.

Vehicles with 2.5L or 3.0L engine

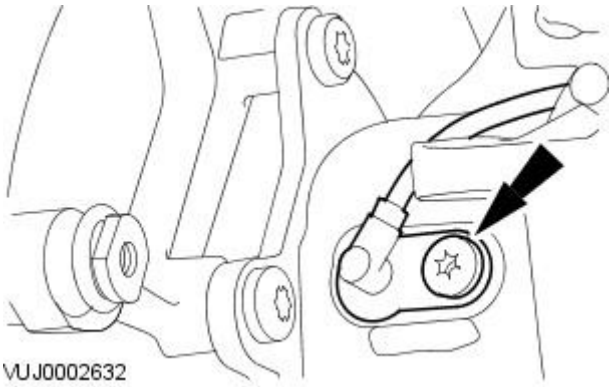

11. NOTE: Left-hand shown, right-hand similar.

Detach the Anti-lock brake system (ABS) wheel speed sensors.

- Remove the ABS wheel speed sensor retaining bolts.

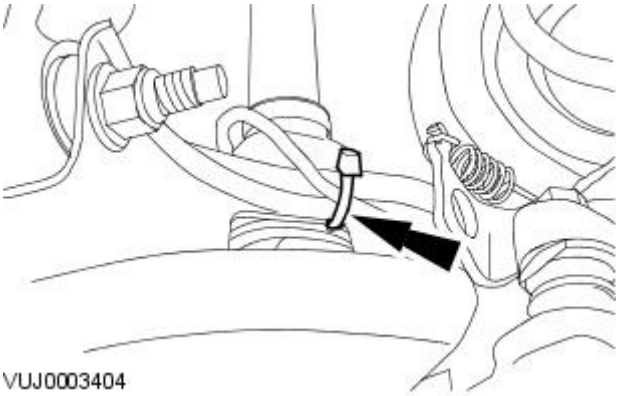

12. NOTE: Left-hand shown, right-hand similar.

Remove the ABS wheel speed sensor wiring harness retaining straps.

Vehicles with 2.0L engine

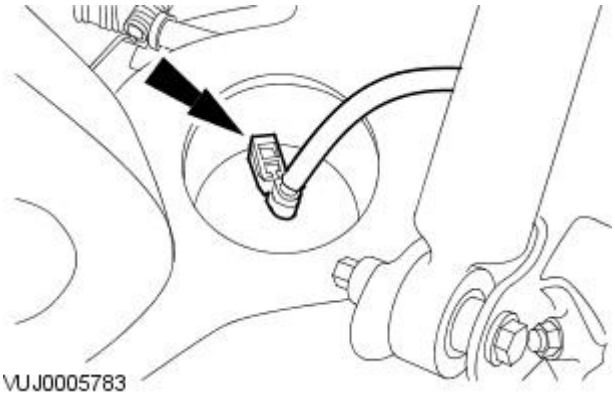

13. NOTE: Left-hand shown, right-hand similar.

Disconnect the electrical connectors.

All vehicles

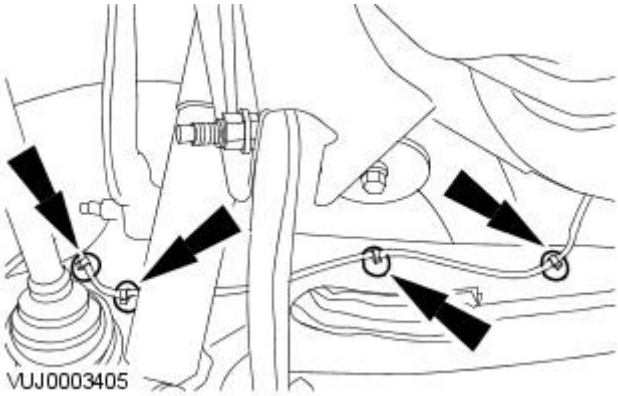

14. NOTE: Left-hand shown, right-hand similar.

• NOTE: 2.5L and 3.0L shown, 2.0L similar.

Detach the ABS wheel speed sensor wiring harness.

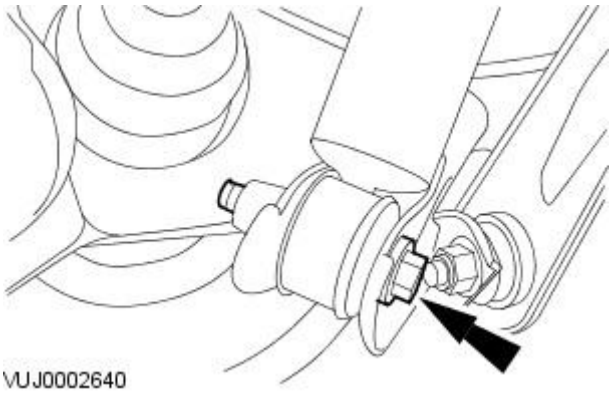

15. NOTE: Left-hand shown, right-hand similar.

Detach the dampers.

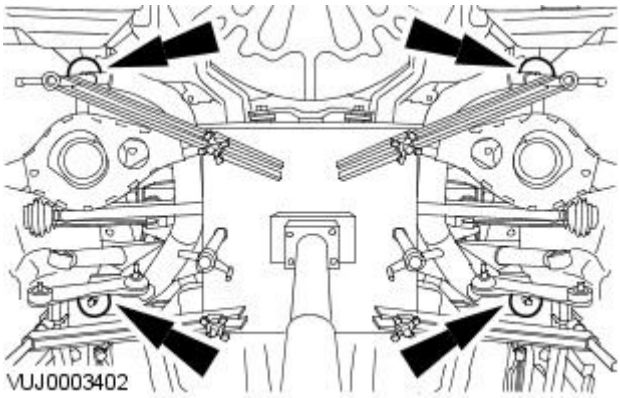

16. NOTE: 2.5L and 3.0L shown, 2.0L similar.

Install the special tool.

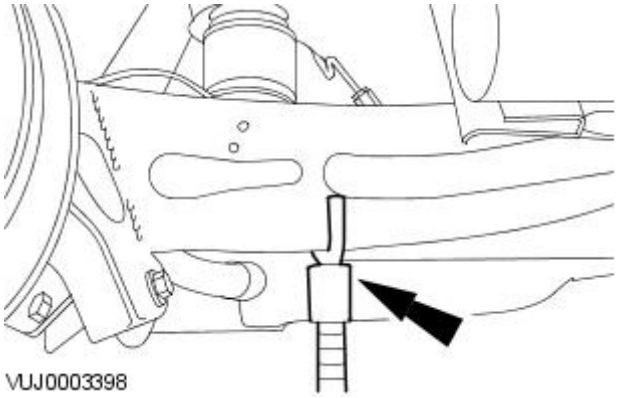

17. NOTE: Right-hand shown, left-hand similar.

Position and adjust the special tool front height adjusters.

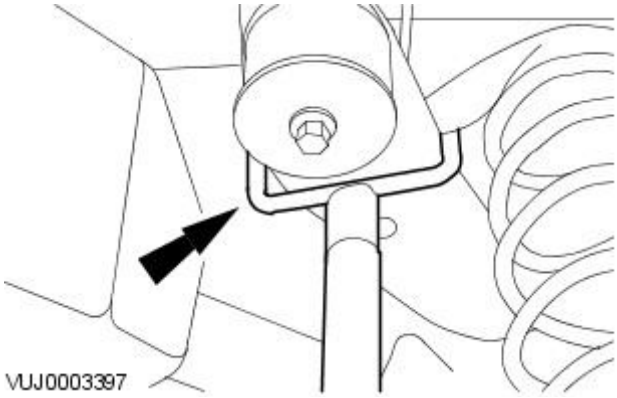

18. NOTE: Right-hand shown, left-hand similar.

Position and adjust the special tool rear height adjusters.

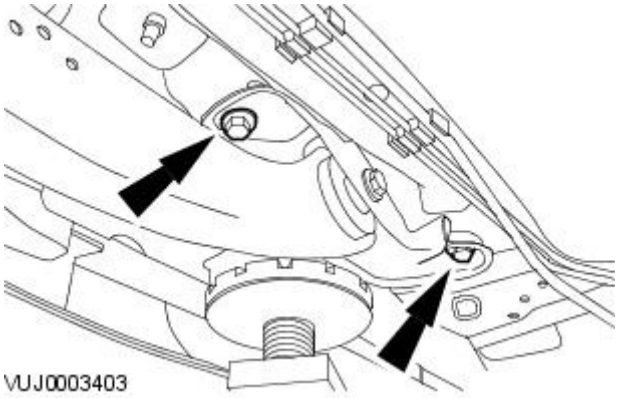

19. NOTE: Left-hand shown, right-hand similar.

Detach the wheel knuckle mounting brackets.

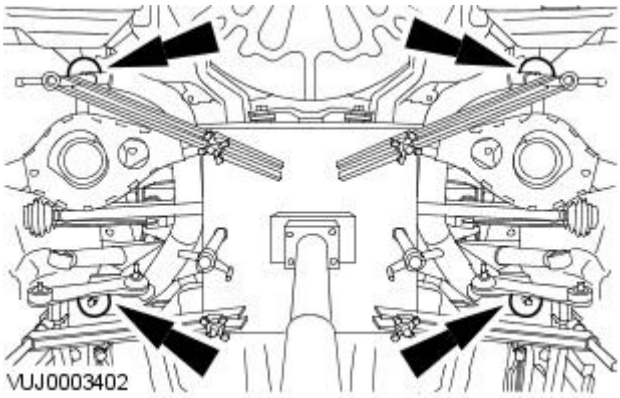

20. NOTE: 2.5L and 3.0L shown, 2.0L similar.

Detach the rear subframe.

21. WARNING: Rotate the special tool height adjustment valve slowly. Failure to follow this instruction can result in personal injury.

Remove the rear subframe.

- Rotate the special tool height adjustment valve counter clockwise.

Installation

All vehicles

1. NOTE: The final tightening of the suspension components must be carried out with the vehicle on its wheels.

To install, reverse the removal procedure.

2. Tighten to 126 Nm.

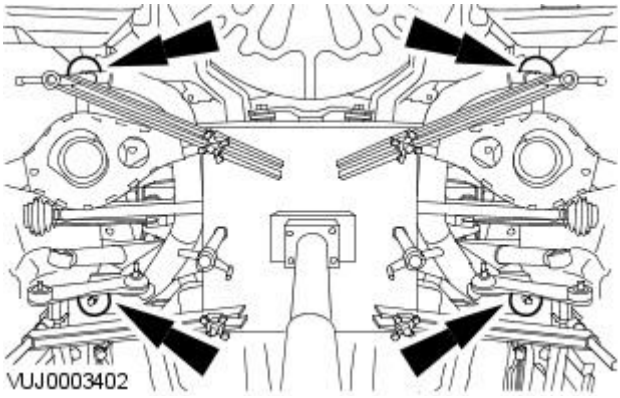

Vehicles with 2.5L or 3.0L engine

3. Tighten to 22 Nm.

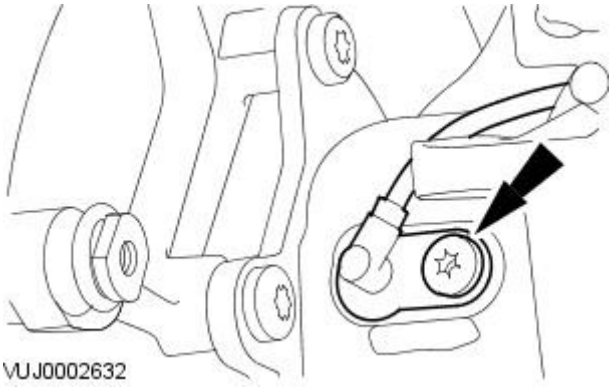

4. Install the driveshaft.For additional information, refer to: Driveshaft (205-01 Driveshaft, Removal and Installation).

All vehicles

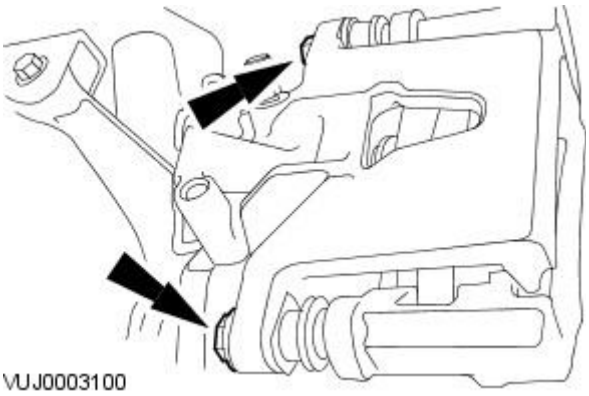

5. CAUTIONS:

Make sure that the piston location mark is in the correct position so that the locator pin on the brake pad backing plate locates correctly into the piston.

Make sure that the brake disc faces are clean before installation.

- NOTE: Install new brake caliper retaining bolts.
- NOTE: Right-hand shown, left-hand similar.

Tighten to 32 Nm.

6. Install the front muffler.For additional information, refer to: (309-00 Exhaust System)

Front Muffler - 2.0L Duratorq-TDCi/2.2L Duratorq-TDCi (110kW/150PS) - Puma (Removal and Installation),
Front Muffler - 2.0L NA V6 - AJV6/2.5L NA V6 - AJV6/3.0L NA V6 - AJ27 (Removal and Installation).

7. Install the wheels and tires.For additional information, refer to: Wheel and Tire (204-04 Wheels and Tires, Removal and Installation).

8. Tighten to 126 Nm.

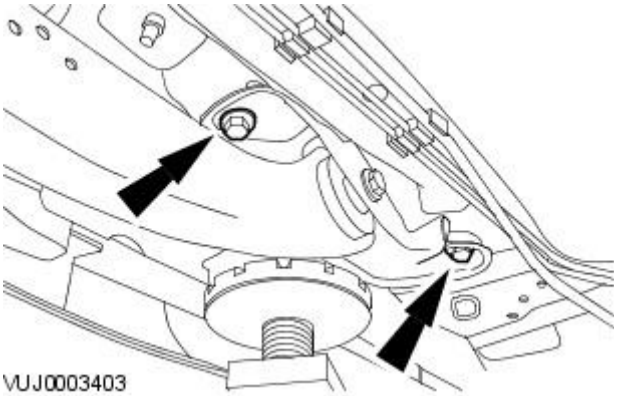

9. NOTE: Install new retaining bolts.

- NOTE: 2.5L and 3.0L shown, 2.0L similar.

Tighten to 130 Nm.

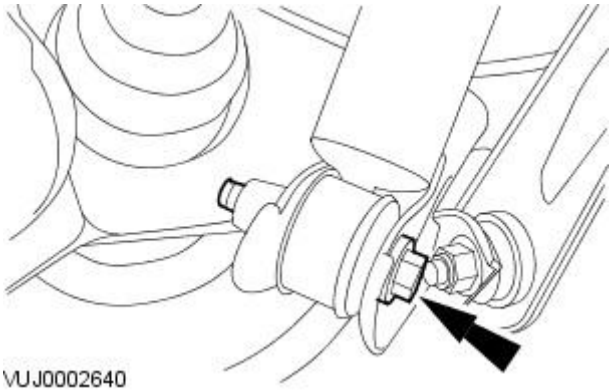

10. Carry out the rear subframe alignment procedure.For additional information, refer to: Underbody Misalignment Check (502-00 Uni-Body, Subframe and Mounting System, General Procedures).

Uni-Body, Subframe and Mounting System - Rear Subframe Bushing

Removal and Installation

Special Tool(s)	
204-315	Bush remover 204-315
204-316	Support cup 204-316
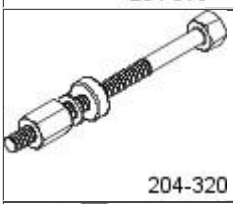 204-320	Forcing screw 204-320
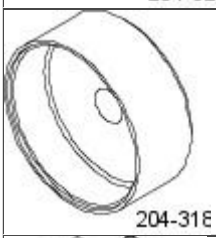 204-318	Support cup 204-318
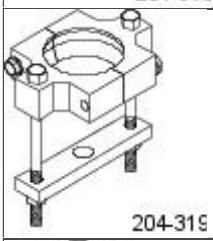 204-319	Installer guide 204-319
204-317	Pusher 204-317

All mounting bushes

1. Remove the rear subframe. For additional information, refer to Subframe —Rear.

Rear subframe front mounting bush

2. Note the orientation of the mounting bush.

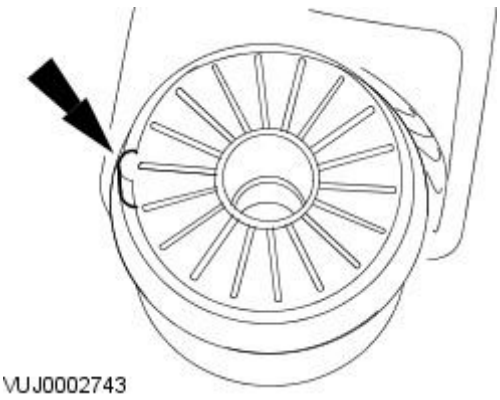

Rear subframe rear mounting bush

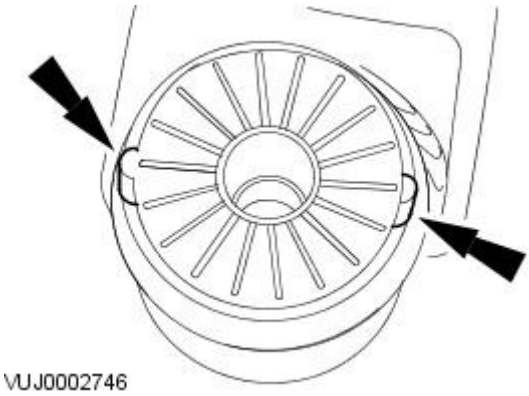

3. Note the orientation of the mounting bush.

All mounting bushes

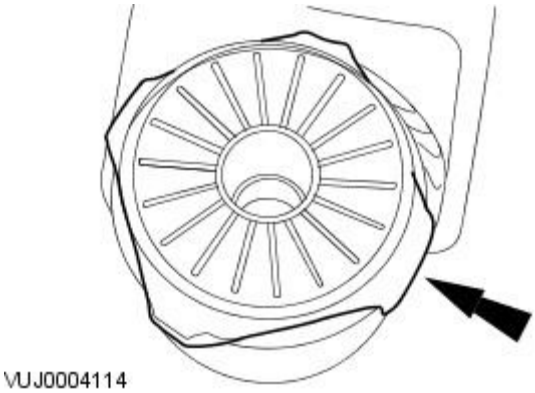

4. CAUTION: Make sure the subframe is not damaged during this procedure.

Cut the edge of the mounting bush.

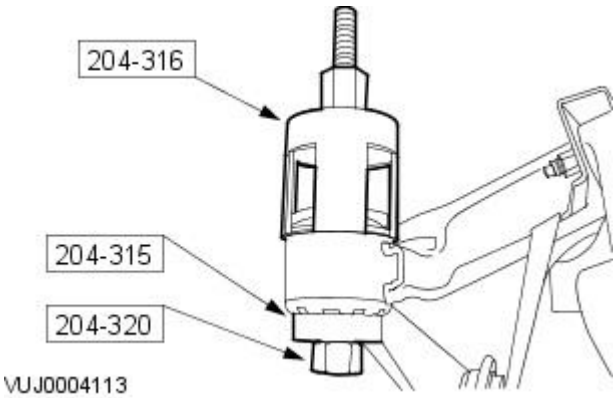

5. Using the special tools, remove the mounting bush.

Installation

Rear subframe front mounting bush

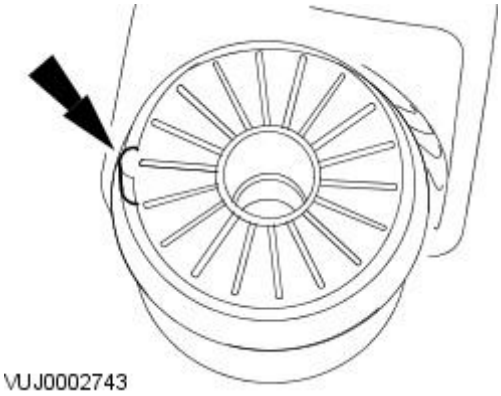

1. NOTE: Apply a suitable amount of Shell gravex oil 973 to the bush before installing.

Align the bush to the subframe. The alignment pointer points to the front of the vehicle.

Rear subframe rear mounting bush

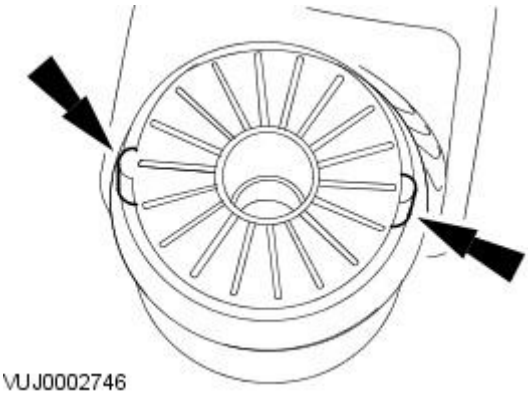

2. NOTE: Apply a suitable amount of Shell gravex oil 973 to the bush before installing.

Align the bush to the subframe. The alignment pointer points to the front and rear of the vehicle.

All mounting bushes

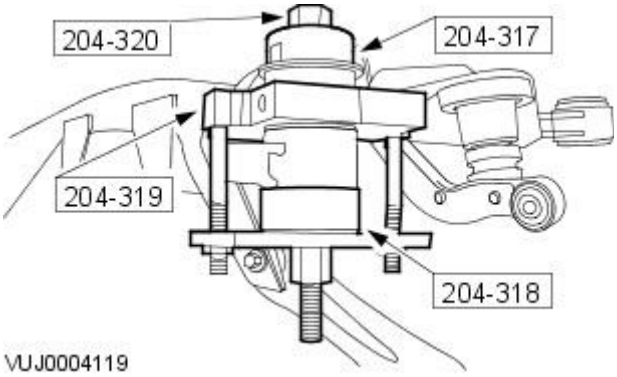

3. Using the special tools, install the mounting bush.

4. Install the rear subframe. For additional information, refer to Subframe —Rear.

www.JagDocs.com