WARNING

Servicing a vehicle can be dangerous. If you have not received service-related training, the risks of injury, property damage, and failure of servicing increase. The recommended servicing procedures for the vehicle in this workshop manual were developed with Mazda-trained technicians in mind. This manual may be useful to non-Mazda trained technicians, but a technician with our service-related training and experience will be at less risk when performing service operations. However, all users of this manual are excepted at least to know general safety procedures.

This manual contains “Warnings” and “Cautions” applicable to risks not normally encountered in a general technician’s experience. They should be followed to reduce the risk of injury and the risk that improper service or repair may damage the vehicle or render it unsafe. It is also important to understand that the “Warnings” and “Cautions” are not exhaustive. It is impossible to warn of all the hazardous consequences that might result from failure to follow the procedures.

The procedures recommended and described in this manual are effective methods of performing service and repair. Some require tools specifically designed for a specific purpose. Persons using procedures and tools which are not recommended by Mazda Motor Corporation must satisfy themselves thoroughly that neither personal safety nor safety of the vehicle will be jeopardized.

The contents of this manual, including drawings and specifications, are the latest available at the time of printing, and Mazda Motor Corporation reserves the right to change the vehicle designs and alter the contents of this manual without notice and without incurring obligation.

Parts should be replaced with genuine Mazda replacement parts or with parts which match the quality of genuine Mazda replacement parts. Persons using replacement parts of lesser quality than that of genuine Mazda replacement parts must satisfy themselves thoroughly that neither personal safety nor safety of the vehicle will be jeopardized.

Mazda Motor Corporation is not responsible for any problems which may arise from the use of this manual. The cause of such problems includes but is not limited to insufficient service-related training, use of improper tools, use of replacement parts of lesser quality than that of genuine Mazda replacement parts, or not being aware of any revision of this manual.

MAZDA BT-50
Wiring Diagram

FOREWORD

This wiring diagram incorporates the wiring schematics of the Mazda BT-50 and available optional equipment. Actual vehicle wiring may vary slightly depending on optional equipment or local specifications, or both.

For proper repair and maintenance, a thorough familiarization with this manual is important, and it should always be kept in a handy place for quick and easy reference.

All the contents of this manual, including drawings and specifications, are the latest available at the time of printing.
As modifications affecting repair or maintenance occur, relevant information supplementary to this volume will be made available at Mazda dealers. This manual should be kept up-to-date.

Mazda Motor Corporation reserves the right to alter the specifications and contents of this manual without obligation or advance notice.

All rights reserved. No part of this book may be reproduced or used in any form or by any means, electronic or mechanical-including photocopying and recording and the use of any kind of information storage and retrieval system-without permission in writing.

Mazda Motor Corporation
HIROSHIMA, JAPAN

APPLICATION:
This manual is applicable to vehicles beginning with the Vehicle Identification Numbers (VIN) shown on the following page.

CONTENTS

©2012 Mazda Motor Corporation
PRINTED IN AUSTRALIA, MAR. 2012
5887-1A-12C

VEHICLE IDENTIFICATION NUMBERS (VIN)
(CHASSIS NUMBERS)

Australian specs.

MM0 UP0YB100 100501-
MM0 UP0YC100 100501-
MM0 UP0YD100 100501-
MM0 UP0YE100 100501-
MM0 UP0YF100 100501-
MM0 UP0YG100 100501-
MM0 UP0YH100 100501-
MM0 UP0YJ100 100501-

General (R.H.D.) specs.

MM6 UP0YA1*0 100501-
MM6 UP0YB1*0 100501-
MM6 UP0YD1*0 100501-
MM6 UP0YF1*0 100501-

U.K.specs.

MMZ UP1GD60W 100501-
MMZ UP1GE60W 100501-
MMZ UP1GH60W 100501-
MMZ UP1SD60W 100501-
MMZ UP1SE60W 100501-
MMZ UP1SH60W 100501-
MMZ UP8BD60W 100501-
MMZ UP8BD80W 100501-
MMZ UP8BE60W 100501-
MMZ UP8BE80W 100501-
MMZ UP8BH60W 100501-
MMZ UP8BH80W 100501-
MMZ UP8DD60W 100501-
MMZ UP8DD80W 100501-
MMZ UP8DE60W 100501-
MMZ UP8DE80W 100501-
MMZ UP8DH60W 100501-
MMZ UP8DH80W 100501-
MMZ UP8GD60W 100501-
MMZ UP8GE60W 100501-
MMZ UP8GH60W 100501-
MMZ UP8SD60W 100501-
MMZ UP8SE60W 100501-
MMZ UP8SH60W 100501-

SYSTEM INDEX

Two digits (section ID) indicated in front of each title are commonly used with the Workshop Manual.

VEHICLE IDENTIFICATION NUMBER (VIN) CODE

Australian, General (R.H.D.) specs.

M M 0 U P 0 Y B 1 C 0 1 2 3 4 5 6

Serial No.	
Dummy	0
Model year	C= 2012, D= 2013, E= 2014...
Minor change code	1
Engine type	A= MZI 2.5 (EURO 1-4) B= MZ-CD 2.2 (Low Power EURO 1-4) D= MZ-CD 2.2 (High Power EURO 1-4) F= MZ-CD 3.2 I5 (EURO 1-4)
Body style	Y= Pickup
Dummy	0
Carline, Series	UP= Mazda BT-50
World manufacturer identification	MM0= MAZDA (Australian specs.) MM6= Mazda (General (R.H.D.) specs.)

U.K.specs.

M M Z U P 1 A D 6 0 W 1 2 3 4 5 6

Serial No.	
Plant	W= A.A.Thailand
History	0, 1, 2, 3, 4, 5...
Minor change code	6= 6MT (2WD) 7= 6MT, High clearance model (2WD, 4WD) 9= 6EAT, High clearance model (2WD, 4WD)
Engine type	D= MZ-CD 2.2 (High Power EURO 1-4) E= MZ-CD 2.2 (High Power EURO 5a) F= MZ-CD 3.2 I5 (EURO 1-4) G= MZ-CD 3.2 I5 (EURO 5a)
Body style	A= incomplete vehicle, RAP, No cargo-box B= incomplete vehicle, DBL, No cargo-box D= DBL G= incomplete vehicle, SGL, No cargo-box R= RAP S= SGL
Drive axle	1= 2WD 8= 4WD
Carline, Series	UP= Mazda BT-50
World manufacturer identification	MMZ= Mazda (European (L.H.D. U.K.) specs.)

VEHICLE IDENTIFICATION NUMBERS (VIN)

Australian specs.

MM0 UP0YB100 100501-
MM0 UP0YC100 100501-
MM0 UP0YD100 100501-
MM0 UP0YE100 100501-
MM0 UP0YF100 100501-
MM0 UP0YG100 100501-
MM0 UP0YH100 100501-
MM0 UP0YJ100 100501-

General (R.H.D.) specs.

MM6 UP0YA1*0 100501-
MM6 UP0YB1*0 100501-
MM6 UP0YD1*0 100501-
MM6 UP0YF1*0 100501-

U.K.specs.

MMZ UP1GD60W 100501-
MMZ UP1GE60W 100501-
MMZ UP1GH60W 100501-
MMZ UP1SD60W 100501-
MMZ UP1SE60W 100501-
MMZ UP1SH60W 100501-
MMZ UP8BD60W 100501-
MMZ UP8BD80W 100501-
MMZ UP8BE60W 100501-
MMZ UP8BE80W 100501-
MMZ UP8BH60W 100501-
MMZ UP8BH80W 100501-
MMZ UP8DD60W 100501-
MMZ UP8DD80W 100501-
MMZ UP8DE60W 100501-
MMZ UP8DE80W 100501-
MMZ UP8DH60W 100501-
MMZ UP8DH80W 100501-
MMZ UP8GD60W 100501-
MMZ UP8GE60W 100501-
MMZ UP8GH60W 100501-
MMZ UP8SD60W 100501-
MMZ UP8SE60W 100501-
MMZ UP8SH60W 100501-

CONTENTS OF WIRING DIAGRAMS

- This manual comprises the sections shown below.

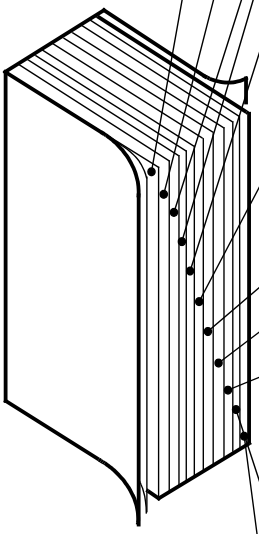

GENERAL INFORMATION	00	R	Reading wiring diagrams	A how-to on using and reading wiring diagrams, using test equipment, checking harness and connectors, and finding trouble spots
		P	Electrical system general procedures	
		E	Electrical wiring schematic	Shows main fuses and other fuses for each system
		F	Fuse box complete wiring system	Shows internal circuits and connectors
		J	Joint box/Junction box complete wiring system	
		C	Common connector list	Shows connectors common throughout system
		G	Ground point	Ground routes from and to the battery
		D	Data link connector	Shows circuit and connector diagrams and component and connector location diagrams
ENGINE	01	12	Cooling system	
		13	Intake air system	
		14	Fuel system	
		17	Charging system	
		18	Ignition system	
		19	Starting system	
		20	Cruise control system	
		40	Control system	
SUSPENSION	02	12	Wheel and tires	
DRIVELINE/AXLE	03	18	4-Wheel drive	
BRAKES	04	13	Antilock brake system	
		14	Traction control system	
		15	Dynamic stability control	
		18	Dynamic stability control/ Roll stability control	
TRANSMISSION/TRANSAXLE	05	13	Automatic transmission	
		14	Automatic transmission shift mechanism	
		17	Automatic transaxle	
		18	Automatic transaxle shift mechanism	
		19	CVT (Continuously variable transaxle)	
STEERING	06	13	Electric power steering (EPS)	
		14	Power steering	
HEATER, VENTILATION & AIR CONDITIONING (HVAC)	07	40	Control system	
RESTRAINTS	08	10	Air bag system	
		11	Seat belt	
BODY & ACCESSORIES	09	12	Glass/Windows/Mirrors	
		13	Seats	
		14	Security and locks	
		15	Sunroof	
		16	Exterior trim	
		18	Lighting systems	
		19	Wiper/Washer system	
		20	Entertainment	
		21	Power systems	
		22	Instrumentation/Driver info.	
		40	Control system	
AI			Alphabetical Index	Gives page number of circuit diagram for each component

Depending on the vehicle model, the actual sections may be different.

GROUND POINTS

- This shows ground points of the harness.

GROUND POINT 00G-a

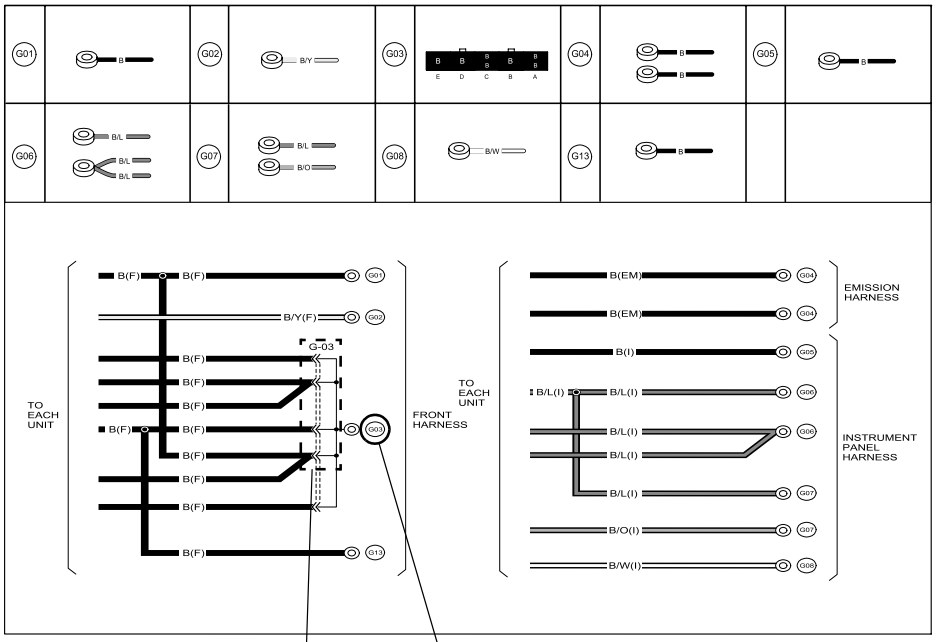

Ground indication	
On vehide	Indication
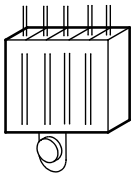	To circuit 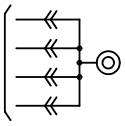

On circuit diagrams and ground points

The ground connection numbers in system circuit diagrams correspond to those in the ground point diagram.

FRONT FOG LIGHT 0918-2

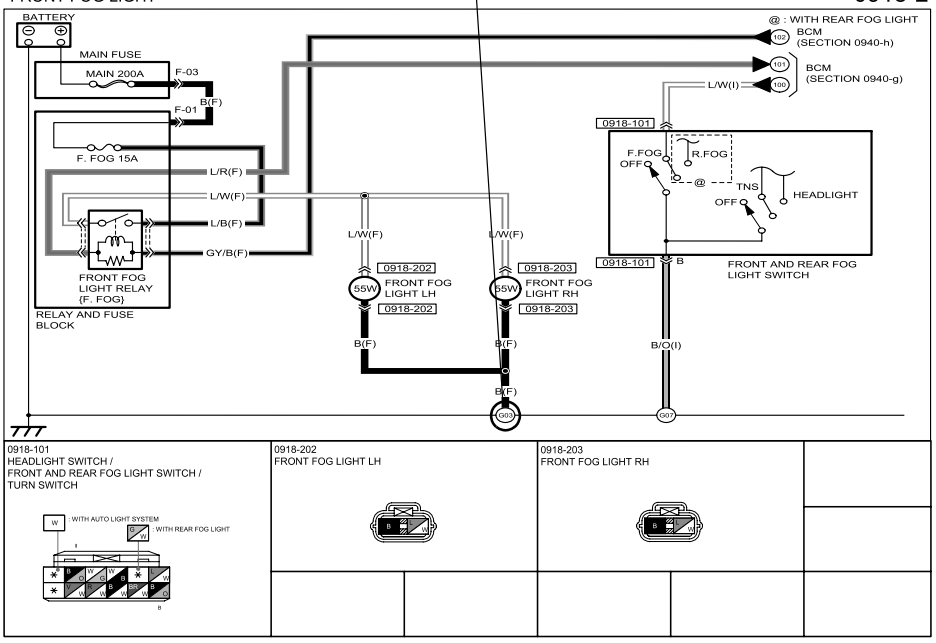

SYSTEM CIRCUIT DIAGRAM/CONNECTOR DIAGRAM

- These diagrams show the circuits for each system, from the power supply to the ground. The power supply side is on the upper part of the page, the ground side on the lower part. The diagrams describe circuits with the ignition switch off.
  Below is an explanation of the various points in the diagram.

System name

The number indicates that the circuit continues to the related system diagram.

{ } : Name indicated on fuse box cover

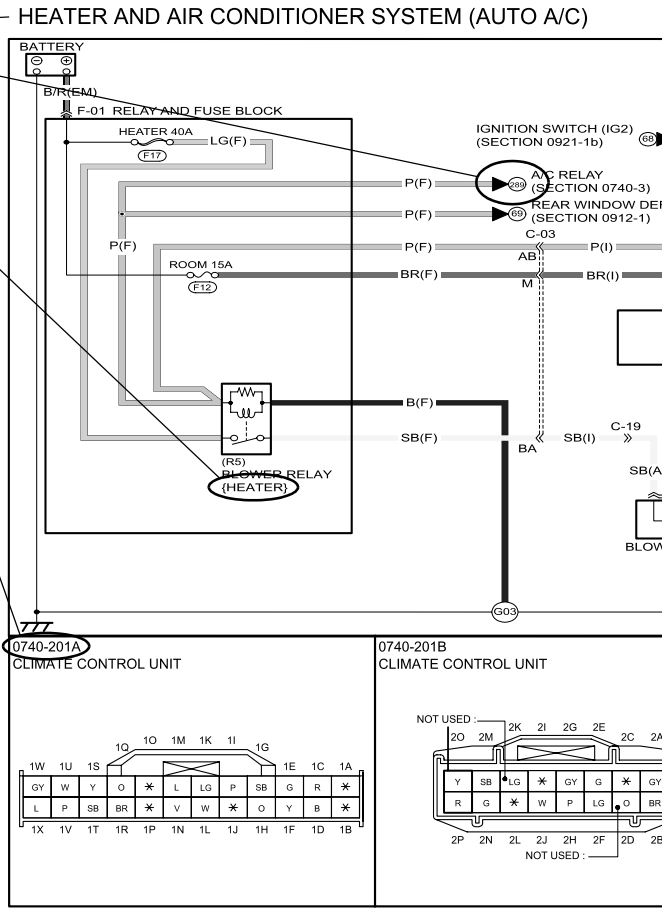

Connector code

The prefix letter indicates the system in which the connector is used.

- **F**: Fuse box connectors
- **J**: Joint box/Junction box connectors
- **C**: Common connectors
- **G**: Ground point connectors
- **D**: Data link connector
- **0112**: Cooling system connectors
- **0113**: Intake air system connectors
- **0114**: Fuel system connectors
- **0117**: Charging system connectors
- **0118**: Ignition system connectors
- **0119**: Starting system connectors
- **0120**: Cruise control system connectors
- **0140**: Engine control system connectors
- **0212**: Wheel and tires connectors
- **0318**: 4-Wheel drive connectors
- **0413**: Antilock brake system connectors
- **0414**: Traction control system connectors
- **0415**: Dynamic stability control connectors
- **0418**: Dynamic stability control/Roll stability control connectors
- **0513**: Automatic transmission connectors
- **0514**: Automatic transmission shift mechanism connectors
- **0517**: Automatic transaxle connectors
- **0518**: Automatic transaxle shift mechanism connectors
- **0519**: CVT (Continuously variable transaxle) connectors
- **0613**: Electric power steering (EPS) connectors
- **0614**: Power steering connectors
- **0740**: Heater, ventilation & air conditioning (HVAC) control system connectors
- **0810**: Air bag system connectors
- **0811**: Seat belt connectors
- **0912**: Glass/Windows/Mirrors connectors
- **0913**: Seats connectors
- **0914**: Security and locks connectors
- **0915**: Sunroof connectors
- **0916**: Exterior trim connectors
- **0918**: Lighting systems connectors
- **0919**: Wiper/Washer system connectors
- **0920**: Entertainment connectors
- **0921**: Power systems
- **0922**: Instrumentation/Driver info. Connectors
- **0940**: Control system

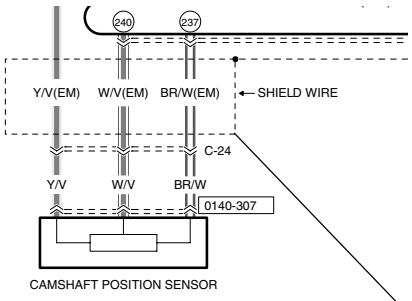

Indicates shielded wire.*

* Shielded wire :
Prevents signal disturbances from electrical interference.
Wire is covered by a metal meshing for grounding.

Current symbol

Current flows in the direction of the arrow.

Multiplex communication

Indicates communication with connected parts.
Signals are transmitted back and forth between connected parts.

System code

0740-2a

Wire color code (harness symbol)

- Two-color wires are indicated by a two-letter symbol.The first indicates the base color of the wire, the second the color of the stripe.
  For example:
  W/R is a white wire with a red strip
  BR/Y is a brown wire with a yellow strip

Symbol
(Example)

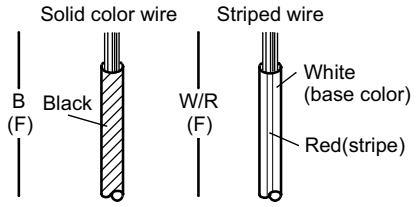

- The harness symbol is in ( ) following the harness symbols (refer to P-9.).

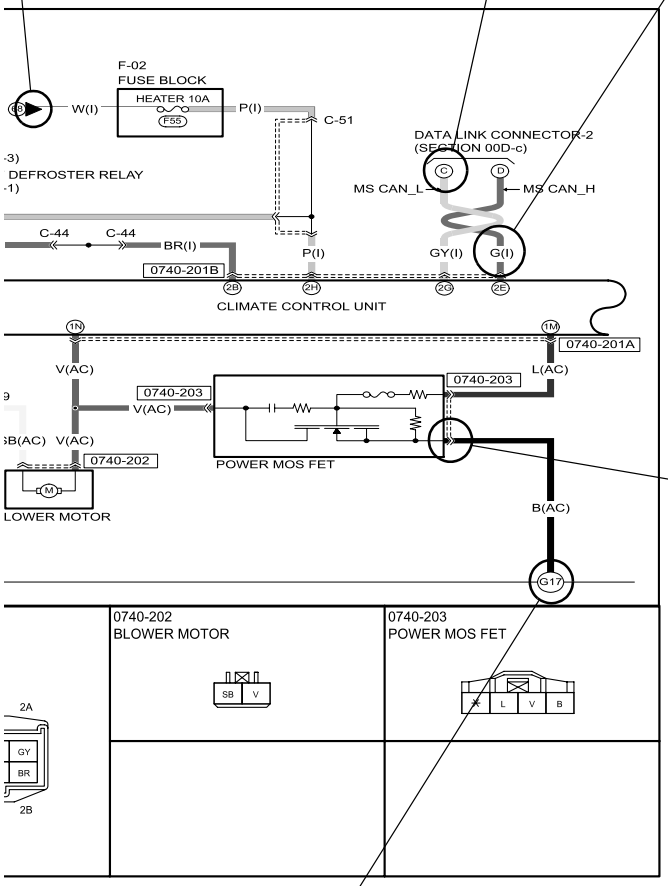

Connector symbols

- Male and female connectors are represented as follows in the circuit and connector diagrams.

		Circuit diagram symbol	Connector diagram symbol
Male	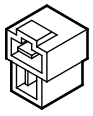	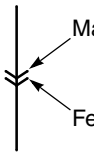	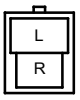
Female	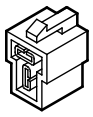		

- Like connectors are linked by dashed lines between the connector symbols.
- Connector diagrams show connectors on the harness side. The terminal indicates the view from the harness side.

(Example)

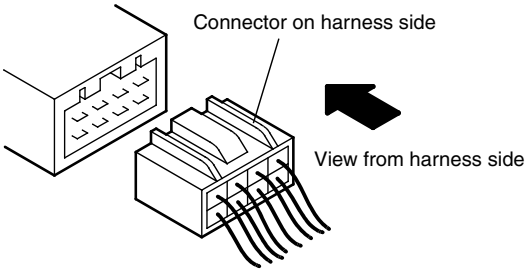

- Colors for connectors except white are given in locations.
- Unused terminals are indicated by ∗.

Ground numbers

A harness ground is represented differently than a unit ground.

Types of grounds	Symbol
Harness 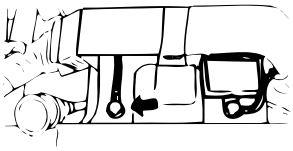	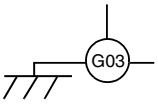
Unit 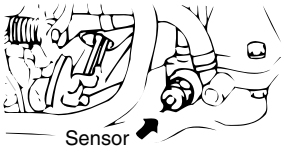	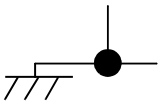

ROUTING DIAGRAM

- The routing diagram shows where electrical components are on the system circuit diagram by call out line and connector symbols.

Connector symbol

Shows the system that uses the connector.

(Example)

Connector	Symbol
Common connectors	C-11
System connectors	0912-301

Ground symbol

Shows the ground in system diagrams.

Component name

Shows the names of components in routing diagrams.

REAR WINDOW DEFROSTER (INCLUDES HEATED OUTER MIRROR INFORMATION) 0912-1

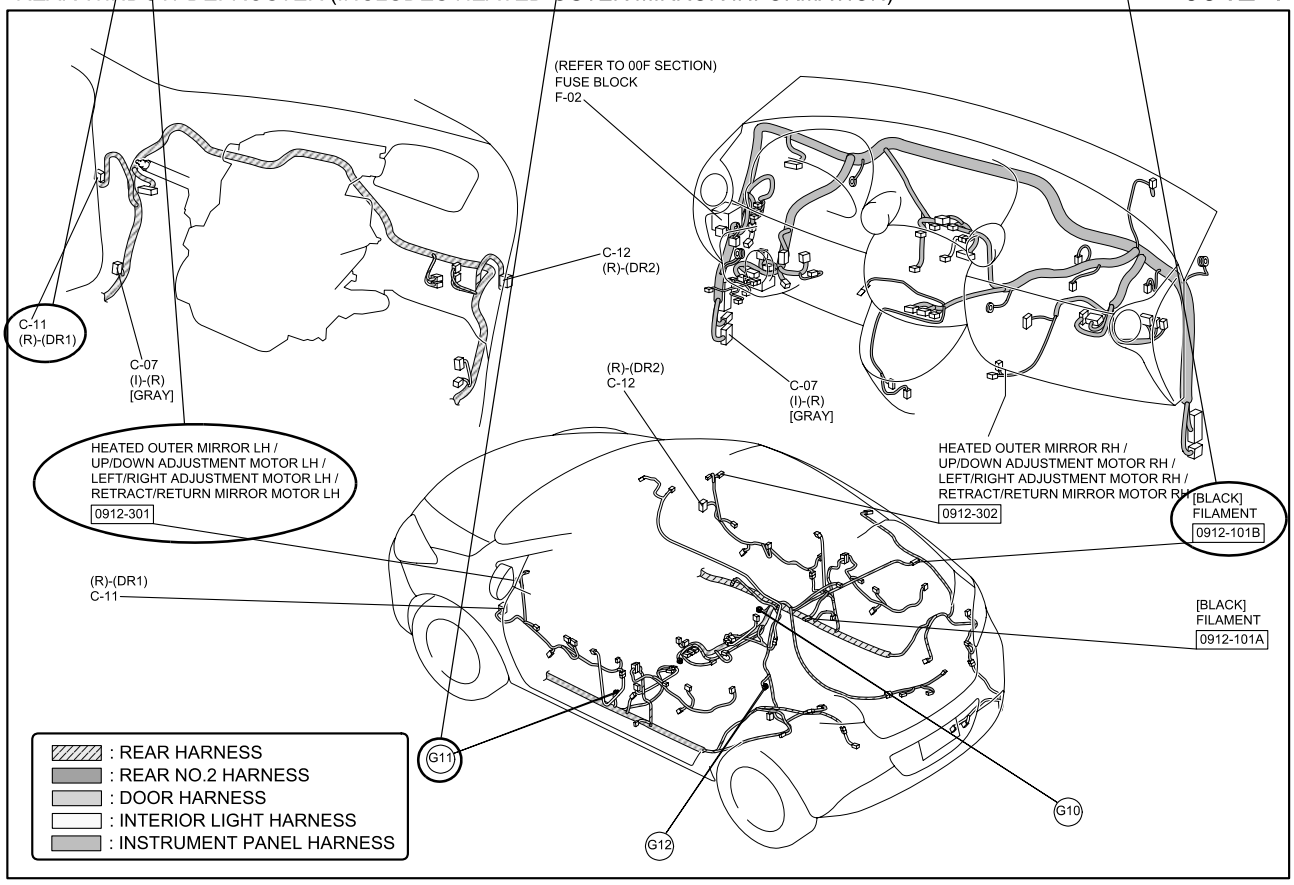

HARNESS SYMBOLS

DESCRIPTION OF HARNESS	SYMBOL		DESCRIPTION OF HARNESS	SYMBOL	
FRONT HARNESS	(F)		DOOR No. 1 HARNESS	(DR1)	—
FRONT No. 2 HARNESS	(F2)		DOOR No. 2 HARNESS	(DR2)	
ENGINE HARNESS	(E)		DOOR No. 3 HARNESS	(DR3)	
DASH HARNESS	(D)		DOOR No. 4 HARNESS	(DR4)	
REAR HARNESS	(R)		FLOOR HARNESS	(FR)	—
REAR No. 2 HARNESS	(R2)		INTERIOR LIGHT HARNESS	(IN)	—
REAR No. 3 HARNESS	(R3)		A/C HARNESS	(AC)	—
INSTRUMENT PANEL HARNESS	(I)	—	INJECTION HARNESS	(INJ)	—
EMISSION HARNESS	(EM)	—	HAND BRAKE HARNESS	(HB)	—
EMISSION No. 2 HARNESS	(EM2)				
EMISSION No. 3 HARNESS	(EM3)				

WIRING COLOR CODE

COLOR	CODE	COLOR	CODE
BLACK	B	ORANGE	O
BLUE	L	PINK	P
BROWN	BR	RED	R
DARK BLUE	DL	SKY BLUE	SB
DARK GREEN	DG	TAN	T
GRAY	GY	VIOLET	V
GREEN	G	WHITE	W
LIGHT BLUE	LB	YELLOW	Y
LIGHT GREEN	LG		

SYMBOLS

Symbol	Meaning	Symbol	Meaning
Battery	• Generates electricity through chemical reaction. • Supplies direct current to circuits.	Light	• Emits light and generates heat when current flows through filament.
Ground (1)	• Connecting point to vehicle body or other ground wire where current flows from positive to negative terminal of battery. • Ground (1) indicates a ground point to body through wire harness. • Ground (2) indicates point where component is grounded directly to body. Remarks • Current will not flow through a circuit if ground is faulty.	Resistance	• A resistor with a constant value. • Mainly used to protect electrical components in circuits by maintaining rated voltage.
Ground (2)		Motor	• Converts electrical energy into mechanical energy.
Ground (3)			

Reading Wiring Diagrams

Symbol	Meaning
Fuse	• Melts when current flow exceeds that specified for circuit, interrupts current flow. Precautions • Do not replace with fuses exceeding specified capacity. <Blade type> <Tube type> 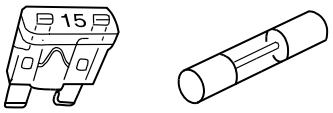 <Cartridge type> <Fusible link> 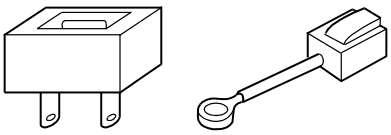
Fuse (For high current fuse)/ Fusible link	
Transistor (1)	• Electrical switching component. • Turns on when voltage is applied to the base (B). 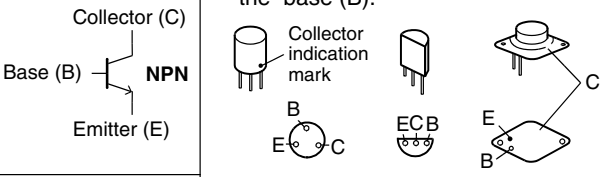
Transistor (2)	• Reading code. 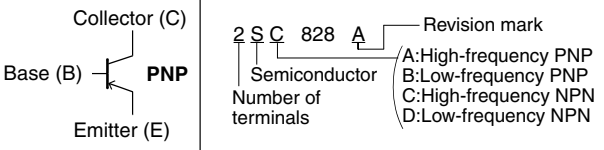
Switch (1) 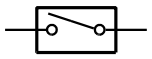 Normally open	• Allows or breaks current flow by opening and closing curcuits.
Switch (2)  Normally closed	
Autostop switch 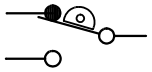	• Automatically shuts off circuit when certain conditions are met.

Symbol	Meaning
Pump  	• Pulls in and discharges gases and liquids.
Cigarette lighter 	• Electrical coil that generates heat.
Accessory socket 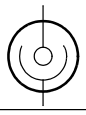	• Interior power supply.
Horn 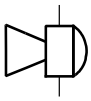	• Generates sound when current flows.
Speaker 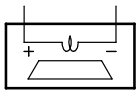 	
Heater 	• Generates heat when current flows.
Ignition switch 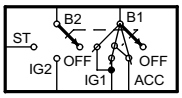 	• Turning ignition key switches circuit to operate various component. (NOTE) Ignition switch is called engine switch on diesel vehicles.
Harness **Connection**  When circuit C-D is connected to circuit A-B, the connection D is indicated by a black dot. **Selection**  Diversion point D for the different circuits according to the vehicle's specification is indicated by a white dot.	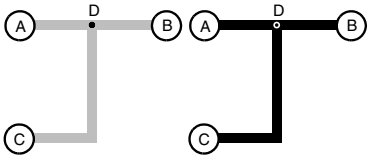 For vehicles with ABS, use the A-B circuit. 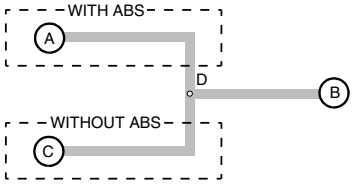 For vehicles without ABS, use the C-B circuit.
Relay (1) 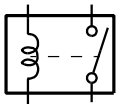 Normally open	• Current flowing through coil produces electromagnetic force causing contact to close. No current to coil 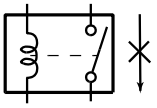 Current to coil 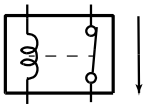

Symbol	Meaning	Symbol	Meaning
Relay (2) Normally closed	• Current flowing through coil produces electromagnetic force causing contact to open. No current to coil Flow Current to coil No flow		
Sensor (1)	• Detects characteristics such as intake manifold vacuum and airflow amount according to resistance variation.	Solenoid	• Current flowing through coil generates electromagnetic force to operate plungers.
Sensor (2)	• Detects resistance variation according to operation of other parts.	Diode	• Known as a semiconductor rectifier, the diode allows current flow in one direction only. Cathode(K) Anode(A) Flow of electric current K A K A K A
Sensor (3)	• A resistor whose resistance variation according to temperature variation. • When temperature increases, resistance decreases.		
Sensor (4)	• Detects pulse signals from rotating object.	Light-emitting diode (LED)	• A diode that lights when current flows. • Unlike ordinary bulbs, the diode does not generate heat when lit. Cathode(K) Anode(A) Cathode(K) Anode(A) Flow of current
Sensor (5)	• Generates potential difference when tension or pressure is applied.		
Capacitor	• Component that temporarily stores electrical charge.	Reference diode (Zener diode)	• Allows current to flow in one direction up to a certain voltage; allows current to flow in the other direction once that voltage is exceeded.

Symbol	Meaning
Extent of the change in the wiring position (1) E C A B B B B B B F D B E C A F D B	• The wiring position can be exchanged freely within the connector.
Extent of the change in the wiring position (2) E C A B B B B B B F D B E C A F D B	• The wiring position can be exchanged according to the following combinations only. Between A and B, Between C and D, Between E and F
Extent of the change in the wiring position (3) 3 L 2 B 1 B 5 L 4 B 8 B/Y 7 B 6 R 2 1 4 7	• The wiring position can be exchanged according to the following combinations only. Between 1, 2, 4 and 7. • The wiring positions may be indicated by numbers for some connectors.

SERVICE WARNING AND CAUTION FOR VEHICLES WITH SRS AIR BAG SYSTEM

If the SRS air bag system inspection is not performed correctly in accordance with the workshop manual procedures it could cause the system to operate (deploy) accidentally, resulting in injury.
Always follow the service warnings and cautions in the workshop manual when performing the SRS air bag system-related inspection or servicing.

SERVICE WARNING FOR VEHICLES WITH DISCHARGE HEADLIGHTS

If the discharge headlight inspection and servicing is not done using the correct procedures in the workshop manual, it could result in electrical shock.
Always follow the service warnings and cautions in the workshop manual when performing the discharge headlight-related inspection or servicing.

ABBREVIATIONS USED IN THIS MANUAL

3GR	THIRD GEAR
4GR	FOURTH GEAR
A	AMPERE
A/C	AIR CONDITIONING
A/F	AIR FUEL RATIO
AAS	AUTO ADJUSTING SUSPENSION
ABS	ANTILOCK BRAKE SYSTEM
ACC	ACCESSORIES
ACV	AIR CONTROL VALVE
ADD	ADDITIONAL
AIS	AIR INJECTION SYSTEM
ALL	AUTOMATIC LOAD LEVELING
AM	AMPLITUDE MODULATION
AMP	AMPLIFIER
ANT	ANTENNA
ASV	AIR SUPPLY VALVE
AT	AUTOMATIC TRANSMISSION
ATX	AUTOMATIC TRANSAXLE
B+	BATTERY POSITIVE VOLTAGE
BAC	BYPASS AIR CONTROL
BTN	BRAKE TAIL NUMBER
CAN	CONTROLLER AREA NETWORK
CIGAR	CIGARETTE
CIS	CONTINUOUS FUEL INJECTION SYSTEM
CKP	CRANKSHAFT POSITION SENSOR
CM	CONTROL MODULE
CMP	CAMSHAFT POSITION SENSOR
COMBI	COMBINATION
CON	CONDITIONER
CONT	CONTROL
CPU	CENTRAL PROCESSING UNIT
CV	CANISTER VENT
DEF	DEFROSTER
DI	DISTRIBUTOR IGNITION
DLC	DATA LINK CONNECTOR
DLI	DISTRIBUTORLESS IGNITION
DOHC	DOUBLE-OVERHEAD CAMSHAFT
DRL	DAYTIME RUNNING LIGHT

DSC	DYNAMIC STABILITY CONTROL
DTC	DIAGNOSTIC TROUBLE CODE(S)
DTM	DIAGNOSTIC TEST MODE
ECPS	ELECTRONICALLY CONTROLLED POWER STEERING
ECT	ENGINE CONTROL TEMPERATURE
EGR	EXHAUST GAS RECIRCULATION
EHPAS	ELECTRO HYDRAULIC POWER ASSIST STEERING
EI	ELECTRONIC IGNITION
ELEC	ELECTRIC
ELR	EMERGENCY LOCKING RETRACTOR
ET	ELECTRONIC THROTTLE
ETC	ELECTRONIC THROTTLE CONTROL
EPS	ELECTRIC POWER STEERING
EVAP	EVAPORATIVE EMISSION
F	FRONT
F/I	FUEL INJECTOR
FICB	FAST-IDLE CAM BREAKER
FM	FREQUENCY MODULATION
FP	FUEL PUMP
FPR	FUEL PUMP RELAY
GEN	GENERATOR
GND	GROUND
H/D	HEATER/DEFROSTER
HEAT	HEATER
HI	HIGH
HO2S	HEATED OXYGEN SENSOR
HS	HIGH SPEED
HU	HYDRAULIC UNIT
IAC	IDLE AIR CONTROL
IAT	INTAKE AIR TEMPERATURE
IG	IGNITION
ILLUMI	ILLUMINATION
INT	INTERMITTENT
JB	JOINT BOX
KS	KNOCK SENSOR
LCD	LIQUID CRYSTAL DISPLAY
LF	LEFT FRONT

LH	LEFT HAND
LO	LOW
LR	LEFT REAR
M	MOTOR
MAF	MASS AIR FLOW
MAP	MANIFOLD ABSOLUTE PRESSURE
MFI	MULTIPORT FUEL INJECTION
MID	MIDDLE
MIL	MALFUNCTION INDICATOR LAMP
MIN	MINUTE
MIX	MIXTURE
MPX	MULTIPLEX
MS	MIDDLE SPEED
MT	MANUAL TRANSMISSION
MTX	MANUAL TRANSAXLE
N	NEUTRAL
NC	NORMALLY CLOSED
NO	NORMALLY OPEN
O2S	OXYGEN SENSOR
OBD	ON-BOARD DIAGNOSTIC
O/D	OVER DRIVE
OFF	SWITCH OFF
ON	SWITCH ON
OSC	OSCILLATOR
P	POWER
P/S	POWER STEERING
PCM	POWERTRAIN CONTROL MODULE
PJB	PASSENGER JUNCTION BOX
PNP	PARK/NEUTRAL POSITION
PRC	PRESSURE REGULATOR CONTROL
PRG	PURGE SOLENOID VALVE
PSP	POWER STEERING PRESSURE
PTC	POSITIVE TEMPERATURE COEFFICIENT HEATER
PWM	PULSE WIDTH MODULATION
QSS	QUICK-START SYSTEM
R	REAR
REC	RECIRCULATION
RES	REAR ENTERTAINMENT SYSTEM
RF	RIGHT FRONT
RH	RIGHT HAND
RPM	REVOLUTIONS PER MINUTE
RR	RIGHT REAR
RSC	ROLL STABILITY CONTROL
SAS	SOPHISTICATED AIR BAG SENSOR
SFI	SEQUENTIAL MULTIPOINT FUEL INJECTION
SOL	SOLENOID
SPV	SPILL VALVE

ST	START
SW	SWITCH
TC	TURBOCHARGER
TCC	TORQUE CONVERTER CLUTCH
TCM	TRANSMISSION(TRANSAXLE) CONTROL MODULE
TCS	TRACTION CONTROL SYSTEM
TEMP	TEMPERATURE
TFT	TRANSAXLE FLUID TEMPERATURE
TICS	TRIPLE INDUCTION CONTROL SYSTEM
TNS	TAIL NUMBER SIDE LIGHTS
TP	THROTTLE POSITION SENSOR
TPMS	TIRE PRESSURE MONITORING SYSTEM
TR	TRANSMISSION(TRANSAXLE) RANGE
TWS	TOTAL WIRING SYSTEM
V	VOLT
VAF	VOLUME AIR FLOW SENSOR
VENT	VENTILATION
VICS	VARIABLE INERTIA CHARGING SYSTEM
VOL	VOLUME
VR	VOLTAGE REGULATOR
VRIS	VARIABLE RESONANCE INDUCTION SYSTEM
VSS	VEHICLE SPEED SENSOR
VTCS	VARIABLE TUMBLE CONTROL SYSTEM
W	WATT(S)
WOT	WIDE OPEN THROTTLE

ELECTRICAL PARTS

B6U000000006W03

Battery Cable

- Before disconnecting connectors or removing electrical parts, disconnect the negative battery cable.

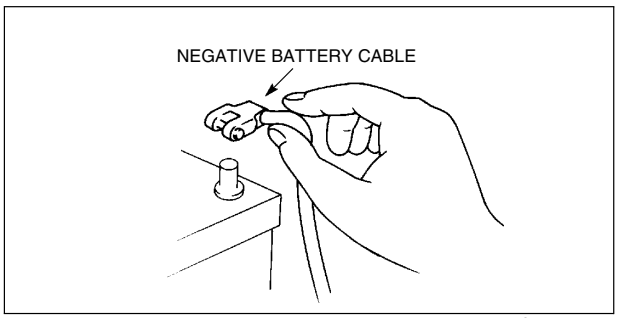

WGIWXX0007E

Wiring Harness

- To remove the wiring harness from the clip in the engine room, pry up the hook of the clip using a flathead screwdriver.

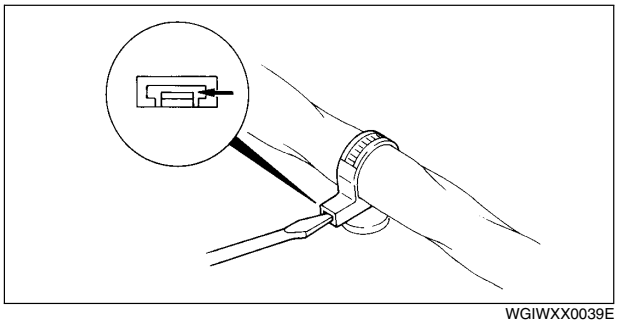

WGIWXX0039E

Caution

- **Do not remove the Harness protective tape. Otherwise, the wires could rub against the body, which could result in water penetration and electrical shorting.**

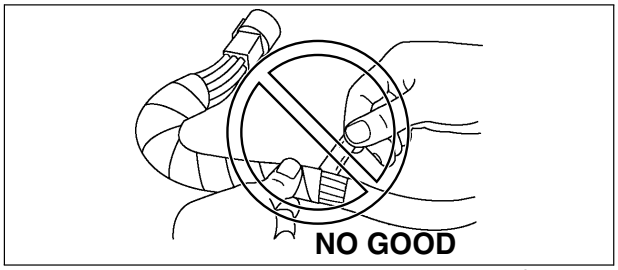

WGIWXX0040E

CONNECTORS

Disconnecting Connectors

- When disconnecting connector, grasp the connectors, not the wires.

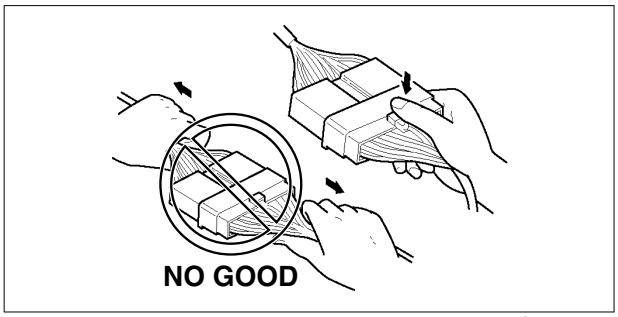

WGIWXX0041E

- Connectors can be disconnected by pressing or pulling the lock lever as shown.

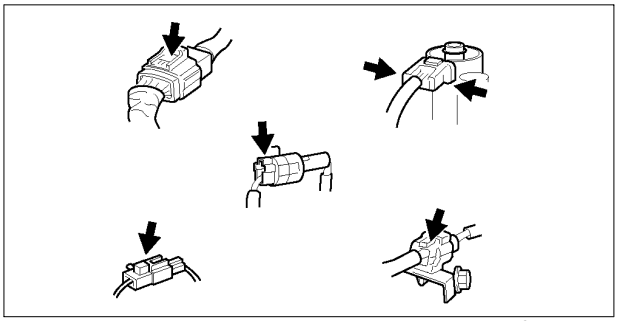

WGIWXX0042E

Locking Connector

- When locking connectors, listen for a click indicating they are securely locked.

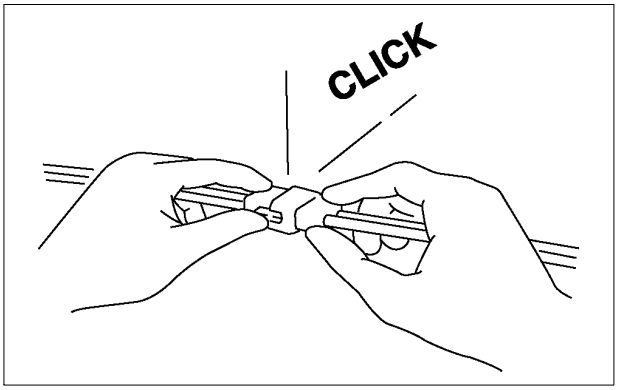

X3U000WB1

Inspection

- When a tester is used to inspect for continuity or measuring voltage, insert the tester probe from the wiring harness side.

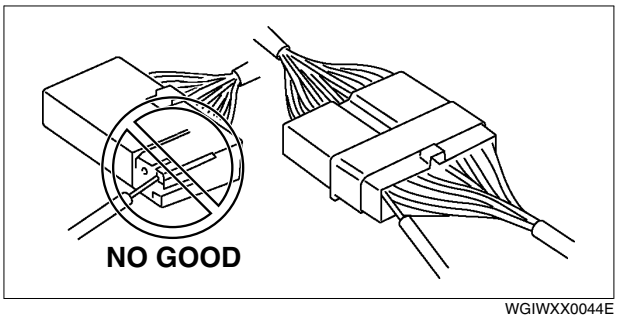

WGIWXX0044E

- Inspect the terminals of waterproof connectors from the connector side since they cannot be accessed from the wiring harness side.

  Caution
  - **To prevent damage to the terminal, wrap a thin wire around the tester probe before inserting into terminal.**

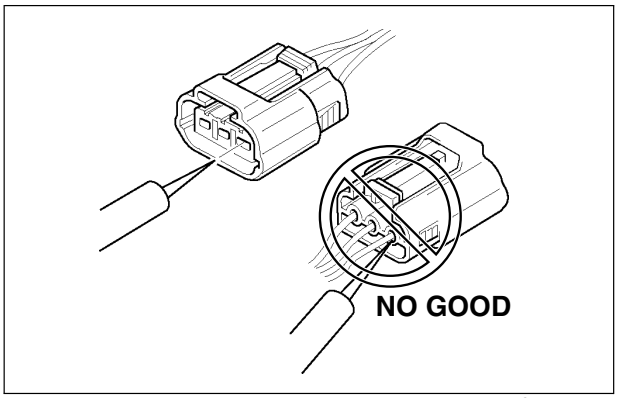

WGIWXX0045E

Terminals

Inspection

- Pull lightly on individual wires to verify that they are secured in the terminal.

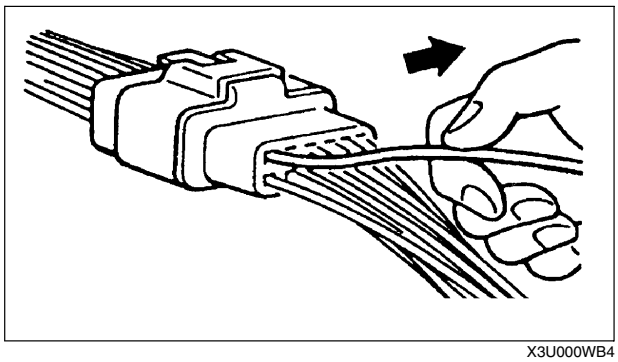

X3U000WB4

Replacement

- Use the appropriate tools to remove a terminal as shown. When installing a terminal, be sure to insert it until it locks securely.
- Insert a thin piece of metal from the terminal side of the connector and with the terminal locking tab pressed down, pull the terminal out from the connector.

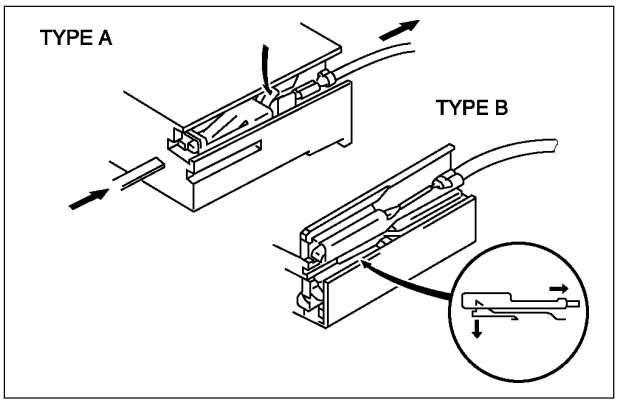

X3U000WB5

Sensors, Switches, And Relays

- Handle sensors, switches, and relays carefully. Do not drop them or strike them against other objects.

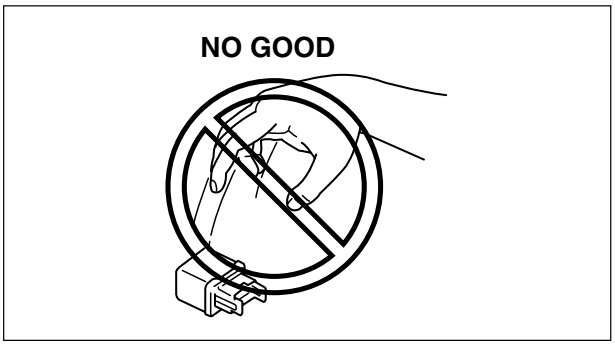

X3U000WB6

Fuse

Replacement

- When replacing a fuse, be sure to replace it with one of the same capacity. If a fuse fails again, the circuit probably has a short and the wiring should be inspected.
- Be sure the negative battery terminal is disconnected before replacing a main fuse.

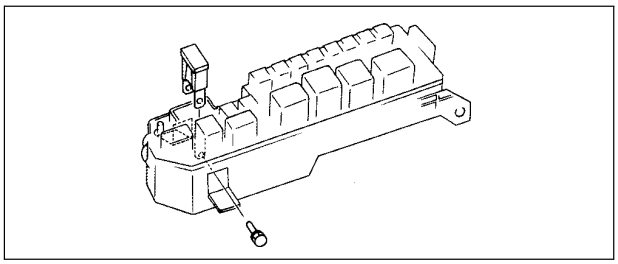

YMU000WA1

- When replacing a pullout fuse, use the fuse puller.

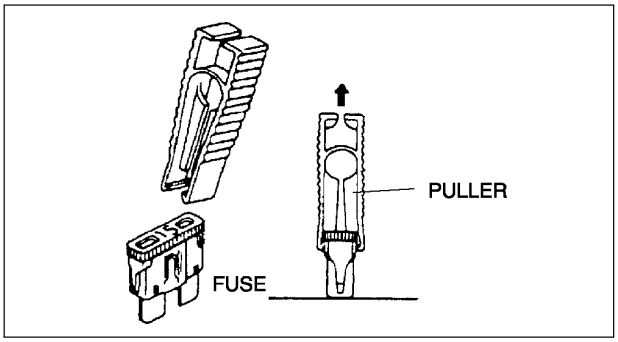

YMU000WAK

ELECTRICAL TROUBLESHOOTING TOOLS

Jumper Wire

- A jumper wire is used to create a temporary circuit. Connect the jumper wire between the terminals of a circuit to bypass a switch.

  Caution
  - **Do not connect a jumper wire from the power source line to a body ground. This may cause burning or other damage to wiring harnesses or electronic components.**

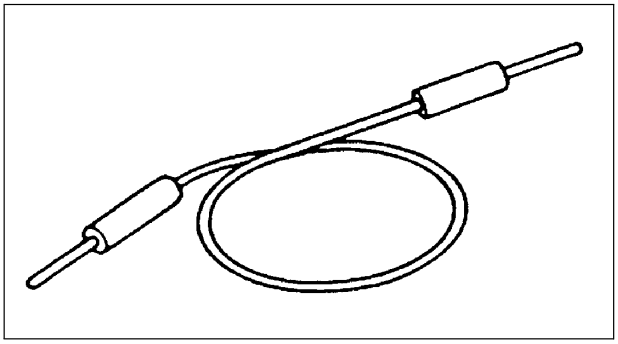
X3U000WBB

Voltmeter

- The DC voltmeter is used to measure circuit voltage. A voltmeter with a range of **15 V or more** is used by connecting the positive (+) probe (red lead wire) to the point where voltage will be measured and the negative (-) probe (black lead wire) to a body ground.

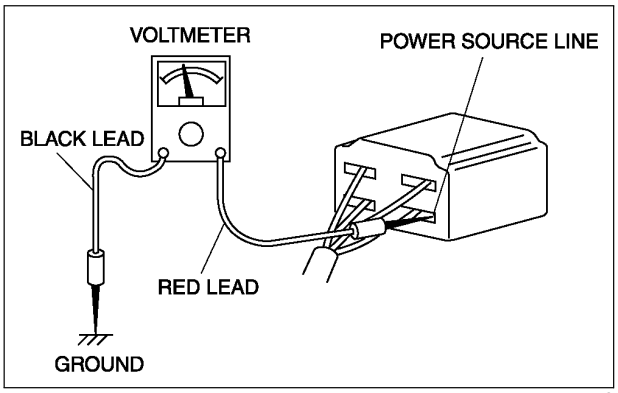

X3U000WBC

Ohmmeter

- The ohmmeter is used to measure the resistance between two points in a circuit and to inspect for continuity and short circuits.

  Caution
  - **Do not connect the ohmmeter to any circuit where voltage is applied. This will damage the ohmmeter.**

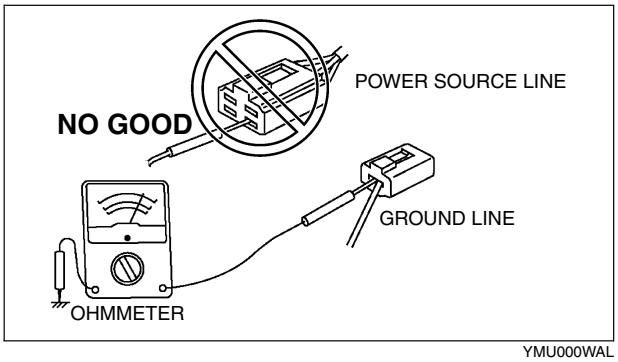

YMU000WAL

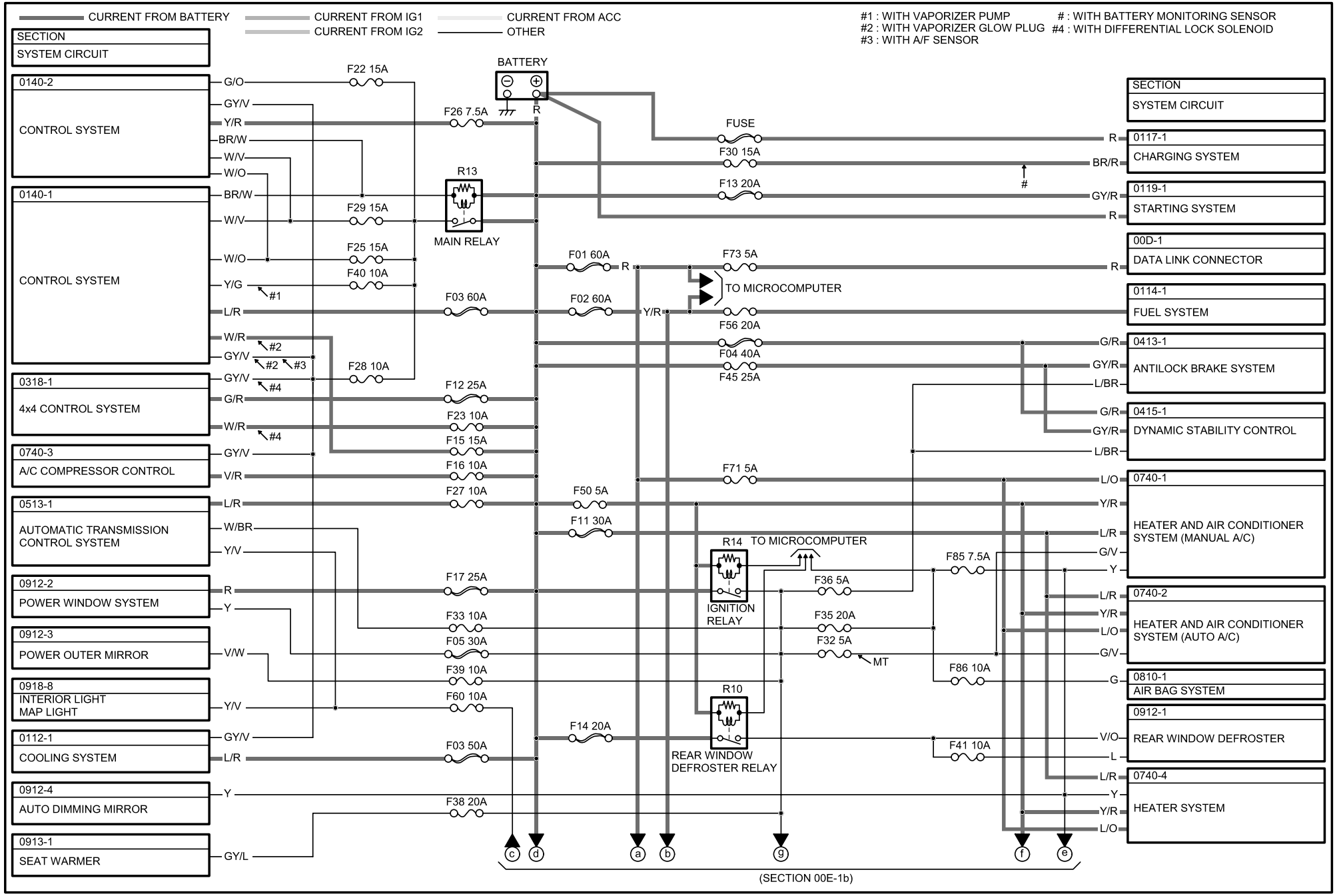
CURRENT FROM BATTERY
CURRENT FROM IG1
CURRENT FROM IG2
CURRENT FROM ACC
OTHER
#1 : WITH VAPORIZER PUMP
#2 : WITH VAPORIZER GLOW PLUG
#3 : WITH A/F SENSOR
: WITH BATTERY MONITORING SENSOR
#4 : WITH DIFFERENTIAL LOCK SOLENOID
SECTION
SYSTEM CIRCUIT
0140-2
CONTROL SYSTEM
0140-1
CONTROL SYSTEM
0318-1
4x4 CONTROL SYSTEM
0740-3
A/C COMPRESSOR CONTROL
0513-1
AUTOMATIC TRANSMISSION CONTROL SYSTEM
0912-2
POWER WINDOW SYSTEM
0912-3
POWER OUTER MIRROR
0918-8
INTERIOR LIGHT MAP LIGHT
0112-1
COOLING SYSTEM
0912-4
AUTO DIMMING MIRROR
0913-1
SEAT WARMER
BATTERY
MAIN RELAY
R13
R14
R10
IGNITION RELAY
REAR WINDOW DEFROSTER RELAY
TO MICROCOMPUTER
FUSE
MT
0117-1
CHARGING SYSTEM
0119-1
STARTING SYSTEM
00D-1
DATA LINK CONNECTOR
0114-1
FUEL SYSTEM
0413-1
ANTILOCK BRAKE SYSTEM
0415-1
DYNAMIC STABILITY CONTROL
0740-1
HEATER AND AIR CONDITIONER SYSTEM (MANUAL A/C)
0740-2
HEATER AND AIR CONDITIONER SYSTEM (AUTO A/C)
0810-1
AIR BAG SYSTEM
0912-1
REAR WINDOW DEFROSTER
0740-4
HEATER SYSTEM
(SECTION 00E-1b)

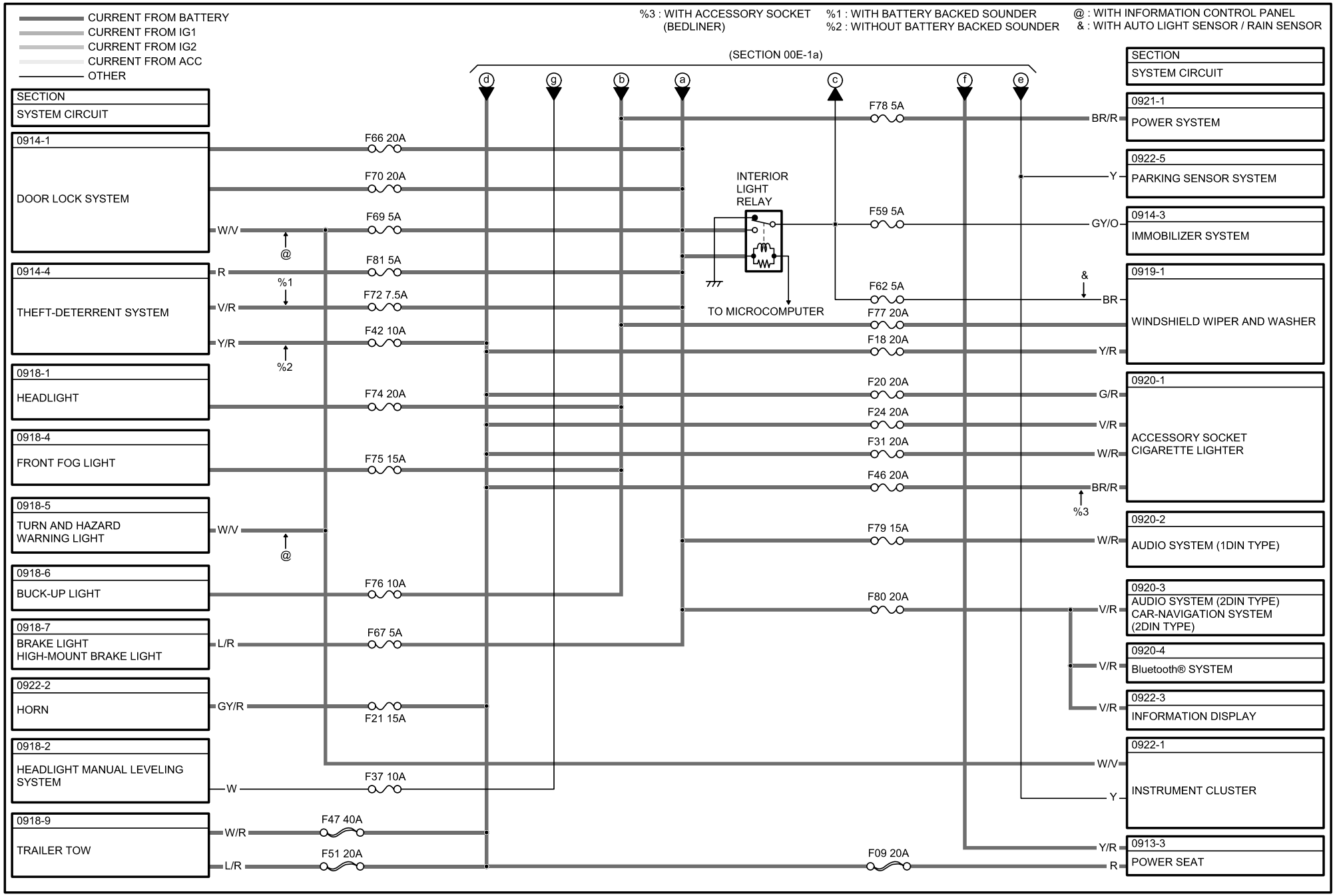
CURRENT FROM BATTERY
CURRENT FROM IG1
CURRENT FROM IG2
CURRENT FROM ACC
OTHER
%3 : WITH ACCESSORY SOCKET (BEDLINER)
%1 : WITH BATTERY BACKED SOUNDER
%2 : WITHOUT BATTERY BACKED SOUNDER
@ : WITH INFORMATION CONTROL PANEL
& : WITH AUTO LIGHT SENSOR / RAIN SENSOR
(SECTION 00E-1a)
SECTION
SYSTEM CIRCUIT
0914-1
DOOR LOCK SYSTEM
0914-4
THEFT-DETERRENT SYSTEM
0918-1
HEADLIGHT
0918-4
FRONT FOG LIGHT
0918-5
TURN AND HAZARD WARNING LIGHT
0918-6
BUCK-UP LIGHT
0918-7
BRAKE LIGHT HIGH-MOUNT BRAKE LIGHT
0922-2
HORN
0918-2
HEADLIGHT MANUAL LEVELING SYSTEM
0918-9
TRAILER TOW
F66 20A
F70 20A
F69 5A
F81 5A
F72 7.5A
F42 10A
F74 20A
F75 15A
F76 10A
F67 5A
F21 15A
F37 10A
F47 40A
F51 20A
W/V
R
V/R
Y/R
L/R
GY/R
W
W/R
@
%1
%2
INTERIOR LIGHT RELAY
TO MICROCOMPUTER
F78 5A
F59 5A
F62 5A
F77 20A
F18 20A
F20 20A
F24 20A
F31 20A
F46 20A
F79 15A
F80 20A
F09 20A
BR/R
Y
GY/O
BR
G/R
V/R
W/R
W/V
R
&
%3
0921-1
POWER SYSTEM
0922-5
PARKING SENSOR SYSTEM
0914-3
IMMOBILIZER SYSTEM
0919-1
WINDSHIELD WIPER AND WASHER
0920-1
ACCESSORY SOCKET CIGARETTE LIGHTER
0920-2
AUDIO SYSTEM (1DIN TYPE)
0920-3
AUDIO SYSTEM (2DIN TYPE) CAR-NAVIGATION SYSTEM (2DIN TYPE)
0920-4
Bluetooth® SYSTEM
0922-3
INFORMATION DISPLAY
0922-1
INSTRUMENT CLUSTER
0913-3
POWER SEAT

F-01
RELAY AND FUSE BLOCK

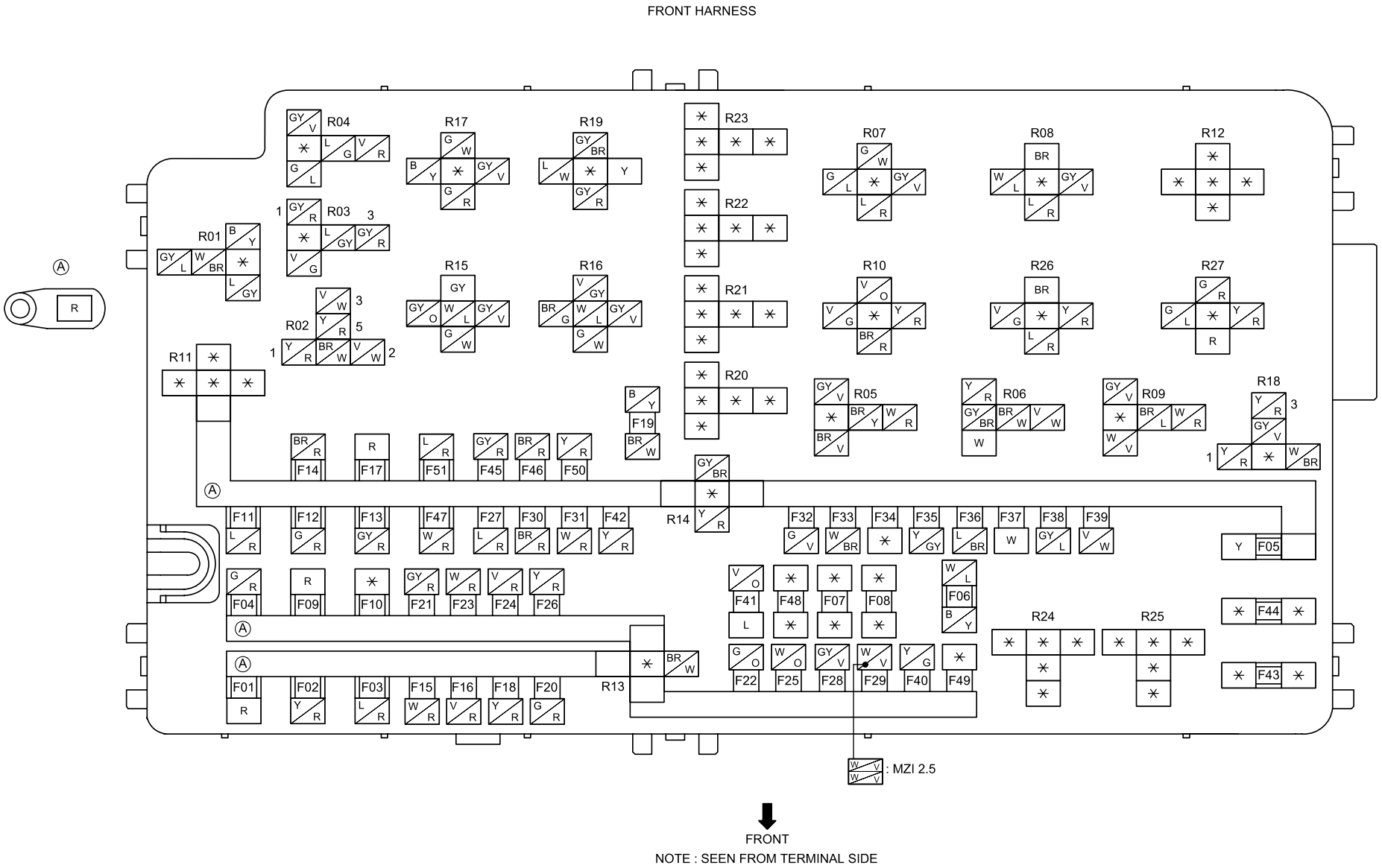

NO.	PROTECTED COMPONENT	FUSE RATING
F01	MICROCOMPUTER, DATA LINK CONNECTOR-2, CLIMATE CONTROL UNIT, UNLOCK RELAY (LF), UNLOCK RELAY (RF, LR, RR), LOCK RELAY, INSTRUMENT CLUSTER, INFORMATION CONTROL PANEL, BATTERY BACKED SOUNDER, INTRUDER SENSOR, BRAKE SWITCH, AUDIO UNIT, AUDIO UNIT / CAR-NAVIGATION UNIT, Bluetooth® UNIT, INTERIOR LIGHT RELAY, MULTI INFORMATION DISPLAY	60A
F02	MICROCOMPUTER, FUEL PUMP RELAY, HEADLIGHT RELAY (HI), FRONT FOG LIGHT RELAY, BACK-UP LIGHT RELAY, FRONT WASHER RELAY, IGNITION SWITCH, TACHOGRAPH	60A
F03	(GLOW CONTROL MODULE) ← # (COOLING FAN RELAY (HI), COOLING FAN RELAY (LO)) ← @	(60A)← # (50A)← @
F04	ABS HU/CM, DSC HU/CM	40A
F05	POWER WINDOW MAIN SWITCH, POWER WINDOW SUBSWITCH RF, POWER WINDOW SUBSWITCH RR, POWER WINDOW SUBSWITCH LR	30A
F06	4x4 MOTOR RELAY NO.1, 4x4 MOTOR RELAY NO.2	25A
F07	*	*
F08	*	*
F09	POWER SEAT RELAY	20A
F10	*	<25A>
F11	BLOWER RELAY	30A
F12	4x4 RELAY	25A
F13	STARTER RELAY	20A
F14	REAR WINDOW DEFROSTER RELAY	20A
F15	GLOW PLUG RELAY	15A
F16	A/C RELAY	10A
F17	POWER WINDOW MAIN SWITCH	25A
F18	WIPER RELAY (HI / LOW), WIPER RELAY (ON / OFF)	20A
F19	WIPER RELAY (ON / OFF)	20A
F20	CIGARETTE LIGHTER	20A
F21	HORN RELAY	15A
F22	FUEL INJECTOR NO.1, FUEL INJECTOR NO.2, FUEL INJECTOR NO.3, FUEL INJECTOR NO.4, VARIABLE TUMBLE SOLENOID VALVE, PURGE SOLENOID VALVE	15A
F23	DIFFERENTIAL LOCK RELAY	10A
F24	ACCESSORY SOCKET (FRONT), ACCESSORY SOCKET (CONSOLE)	20A

NO.	PROTECTED COMPONENT	FUSE RATING
F25	FUEL METERING VALVE, WASTEGATE VALVE ACTUATOR, MASS AIR FLOW / INTAKE AIR TEMPERATURE SENSOR, GLOW CONTROL MODULE, IGNITION COIL NO.1, IGNITION COIL NO.2, IGNITION COIL NO.3, IGNITION COIL NO.4, CONDENSER	15A
F26	PCM	7.5A
F27	TCM	10A
F28	DIFFERENTIAL LOCK RELAY, 4x4 RELAY, 4x4 MOTOR RELAY NO.1, 4x4 MOTOR RELAY NO.2, A/C RELAY, A/F SENSOR, COOLING FAN RELAY (HI), COOLING FAN RELAY (LO), FRONT O2 SENSOR, REAR O2 SENSOR	10A
F29	PCM	15A
F30	BATTERY MONITORING SENSOR	15A
F31	ACCESSORY SOCKET (REAR)	20A
F32	REFRIGERANT PRESSURE SWITCH	5A
F33	TCM	10A
F34	*	*
F35	MICROCOMPUTER, CLIMATE CONTROL UNIT, AUTO DIMMING MIRROR, INSTRUMENT CLUSTER, PARKING SENSOR CONTROL MODULE, SAS CONTROL MODULE, PASSENGER AIR BAG DEACTIVATION SWITCH INDICATOR	20A
F36	ABS HU/CM, DSC HU/CM, STEERING ANGLE SENSOR, HILL DESCENT CONTROL SWITCH	5A
F37	HEADLIGHT LEVELING SWITCH, HEADLIGHT LEVELING ACTUATOR LH, HEADLIGHT LEVELING ACTUATOR RH	10A
F38	SEAT WARMER RH, SEAT WARMER LH	20A
F39	POWER OUTER MIRROR SWITCH	10A
F40	VAPORIZER PUMP	10A
F41	HEATED OUTER MIRROR LH, HEATED OUTER MIRROR RH	10A
F42	THEFT-DETERRENT RELAY	10A
F43	*	<30A>
F44	*	<30A>
F45	ABS HU/CM, DSC HU/CM	25A
F46	ACCESSORY SOCKET (BEDLINER)	20A
F47	TRAILER TOW MODULE	40A
F48	*	*
F49	*	*
F50	BLOWER RELAY, REAR WINDOW DEFROSTER RELAY, IGNITION RELAY, POWER SEAT RELAY	5A
F51	TRAILER TOW CONNECTOR	20A

< > : NOT USED ( ) : IF EQUIPPED

: MZ-CD 2.2, MZ-CD 3.2 I5 @ : MZI 2.5

NO.	RELAY NAME	NO.	RELAY NAME
R01	KEY INTERLOCK RELAY	R15	4x4 MOTOR RELAY NO.2
R02	WIPER RELAY (ON / OFF)	R16	4x4 MOTOR RELAY NO.1
R03	HORN RELAY	R17	4x4 RELAY
R04	A/C RELAY	R18	THEFT-DETERRENT RELAY
R05	DIFFERENTIAL LOCK RELAY	R19	STARTER RELAY
R06	WIPER RELAY (HI / LOW)	R20	*
R07	COOLING FAN RELAY (LO)	R21	*
R08	COOLING FAN RELAY (HI)	R22	*
R09	GLOW PLUG RELAY	R23	*
R10	REAR WINDOW DEFROSTER RELAY	R24	*
R11	*	R25	*
R12	*	R26	BLOWER RELAY
R13	MAIN RELAY	R27	POWER SEAT RELAY
R14	IGNITION RELAY		

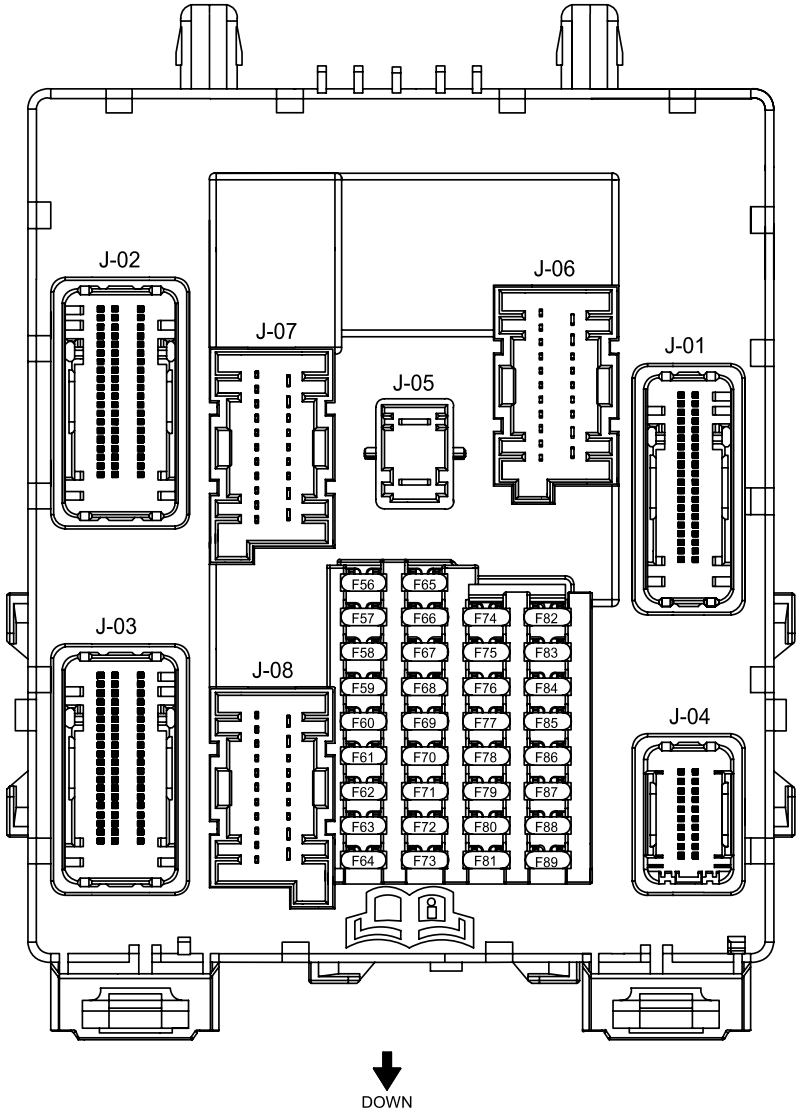

NO.	PROTECTED COMPONENT	FUSE RATING	NO.	PROTECTED COMPONENT	FUSE RATING
F56	FUEL PUMP RELAY	20A	F73	DATA LINK CONNECTOR-2	5A
F57	*	*	F74	HEADLIGHT RELAY (HI)	20A
F58	*	*	F75	FRONT FOG LIGHT RELAY	15A
F59	COIL ANTENNA	5A	F76	BACK-UP LIGHT RELAY	10A
F60	INTERIOR LIGHT, MAP LIGHT, SELECTOR LEVER COMPONENT	10A	F77	FRONT WASHER RELAY	20A
F61	*	*	F78	IGNITION SWITCH	5A
F62	AUTO LIGHT SENSOR / RAIN SENSOR	5A	F79	AUDIO UNIT	15A
F63	*	<5A>	F80	AUDIO UNIT / CAR-NAVIGATION UNIT, Bluetooth® UNIT, MULTI INFORMATION DISPLAY	20A
F64	*	*	F81	INTRUDER SENSOR	5A
F65	*	*	F82	FRONT WASHER RELAY	20A
F66	DOUBLE LOCK RELAY, UNLOCK RELAY (RF)	20A	F83	UNLOCK RELAY (LF, LR, RR), LOCK RELAY	20A
F67	BRAKE SWITCH	5A	F84	DOUBLE LOCK RELAY, UNLOCK RELAY (RF)	20A
F68	*	*	F85	CLIMATE CONTROL UNIT, AUTO DIMMING MIRROR, INSTRUMENT CLUSTER, PARKING SENSOR CONTROL MODULE	7.5A
F69	INSTRUMENT CLUSTER, INFORMATION CONTROL PANEL	5A	F86	SAS CONTROL MODULE	10A
F70	UNLOCK RELAY (LF, LR, RR), LOCK RELAY	20A	F87	*	<5A>
F71	CLIMATE CONTROL UNIT	5A	F88	*	*
F72	BATTERY BACKED SOUNDER	7.5A	F89	*	*

< > : NOT USED

J-01
PJB

FRONT HARNESS

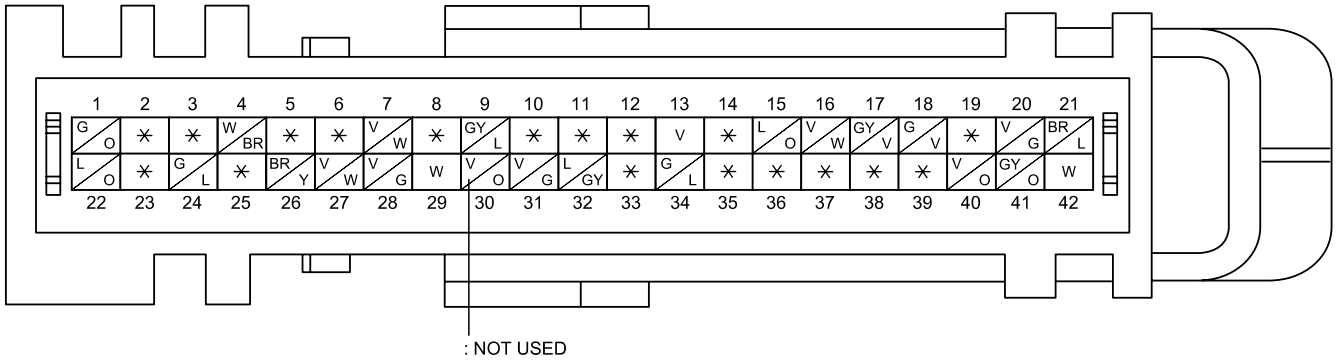

J-02
PJB

REAR HARNESS

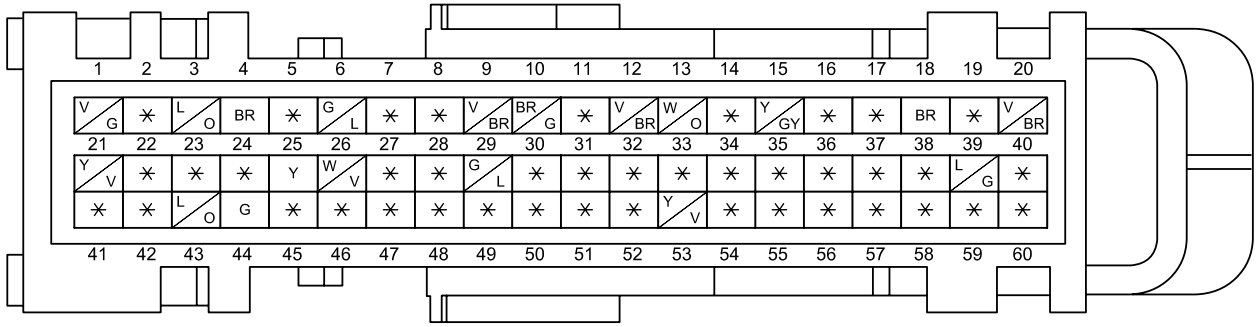

J-03
PJB

INSTRUMENT PANEL HARNESS

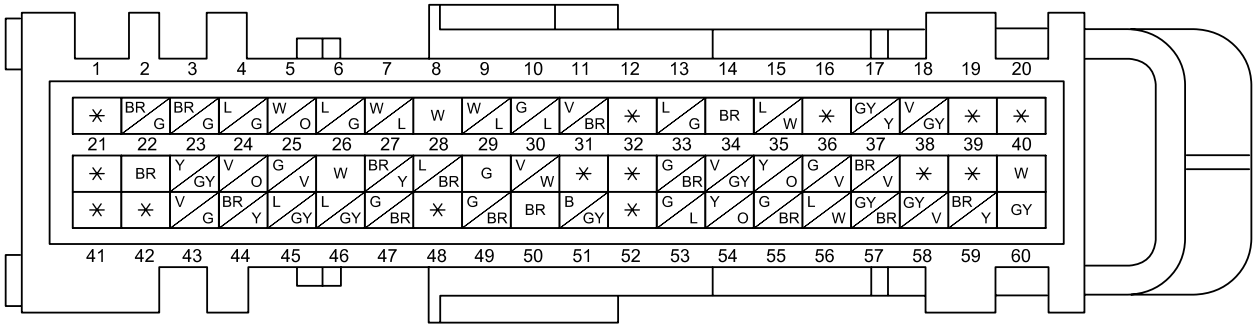

J-04
PJB

INSTRUMENT PANEL HARNESS

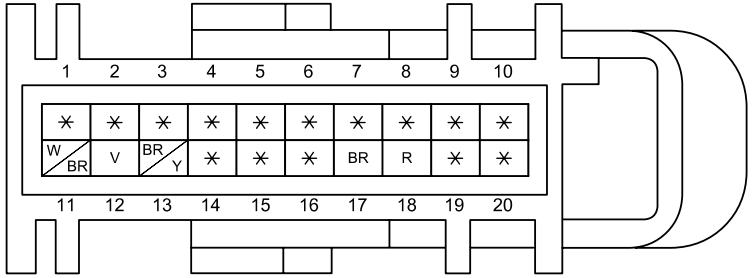

J-05
PJB

FRONT HARNESS

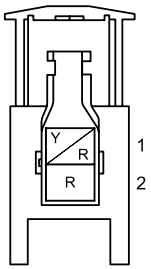

J-06
PJB

FRONT HARNESS

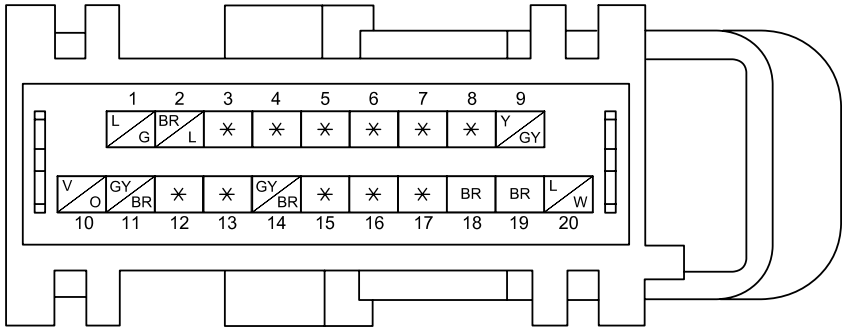

J-07
PJB

REAR HARNESS

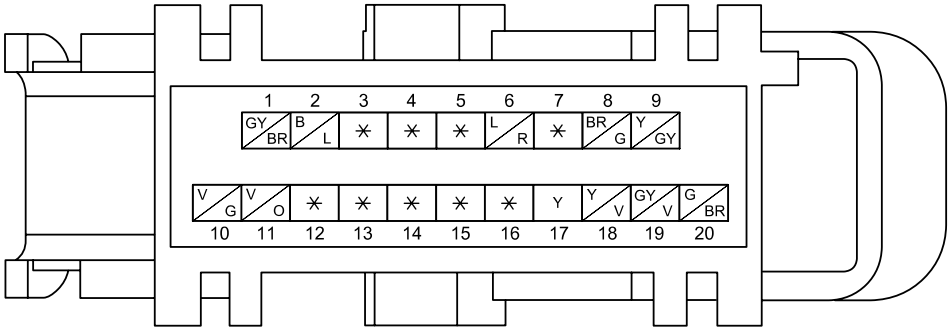

J-08
PJB

INSTRUMENT PANEL HARNESS

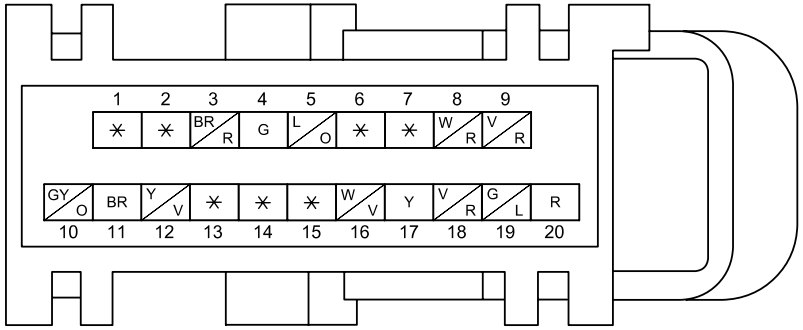

C-01
IGNITION SWITCH

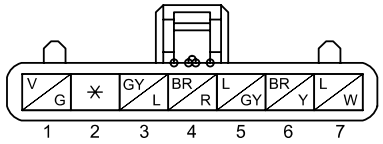

C-02
FRONT HARNESS-SHORT CORD

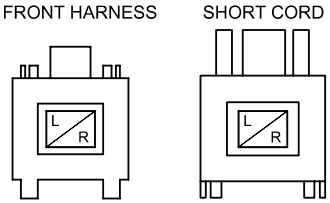

C-03
FRONT HARNESS-ENGINE HARNESS

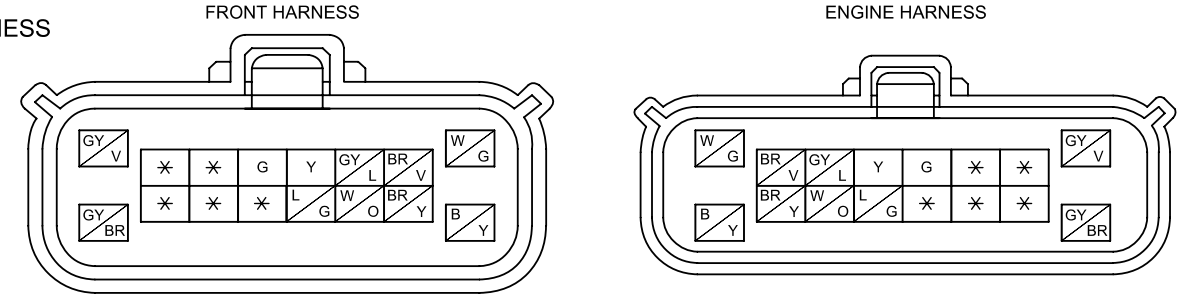

(MZ-CD 2.2, MZ-CD 3.2 I5)

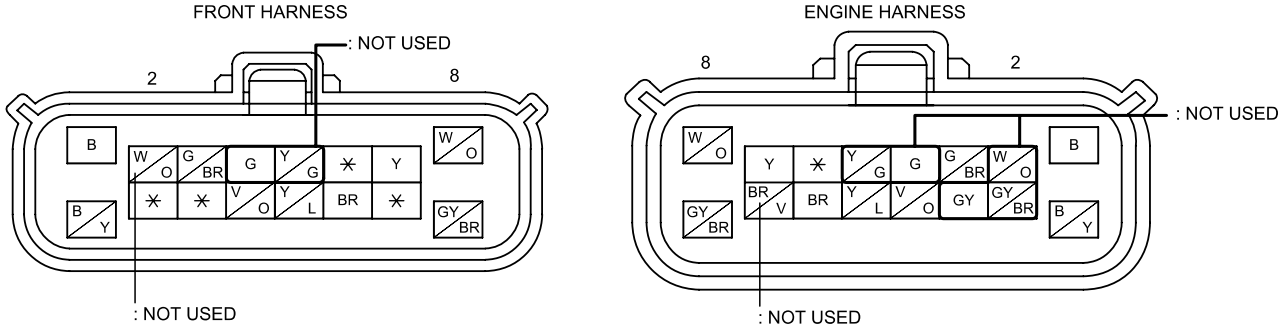

(MZI 2.5)

C-04
FRONT HARNESS-SHORT CORD

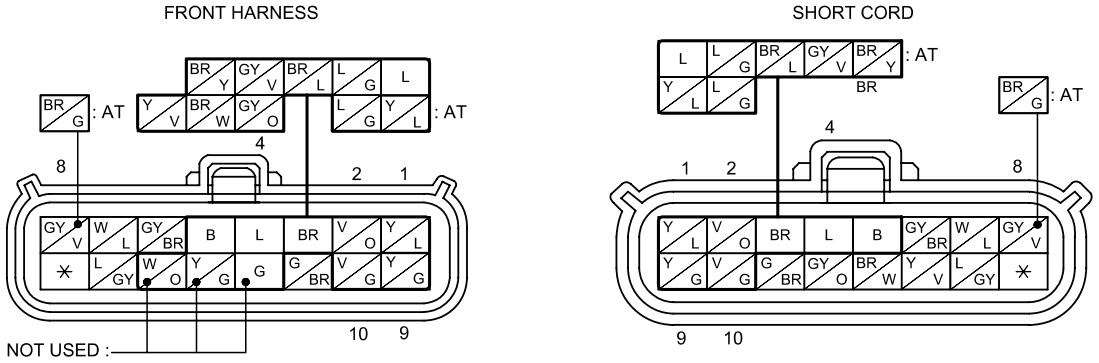

C-05
FRONT HARNESS-SHORT CORD

FRONT HARNESS

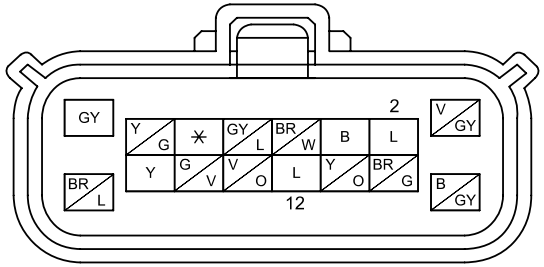

SHORT CORD

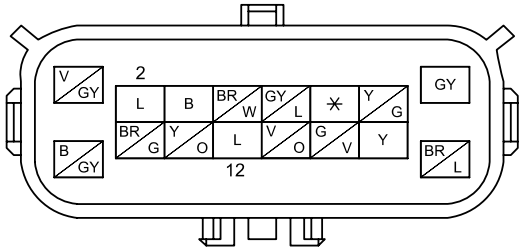

C-06
FRONT HARNESS-SHORT CORD

FRONT HARNESS

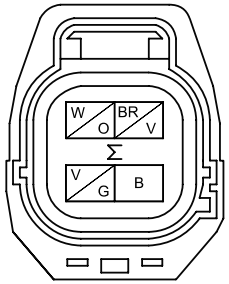

SHORT CORD

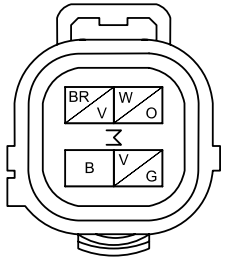

C-07
REAR NO.2 HARNESS-SHORT CORD

REAR NO.2 HARNESS

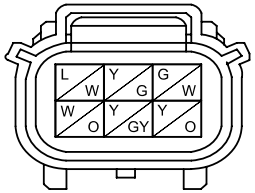

SHORT CORD

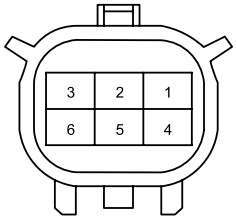

WIRE COLORS ARE INDICATED BY NUMBERS.

C-08
REAR NO.2 HARNESS-SHORT CORD

REAR NO.2 HARNESS

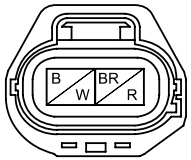

SHORT CORD

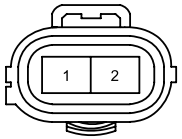

WIRE COLORS ARE INDICATED BY NUMBERS.

C-09
REAR NO.2 HARNESS-SHORT CORD

REAR NO.2 HARNESS

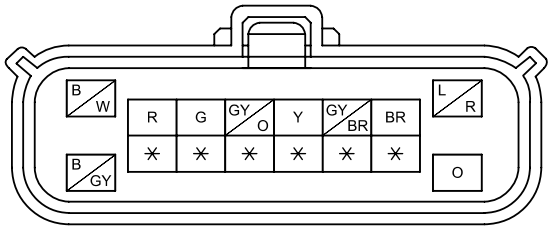

SHORT CORD

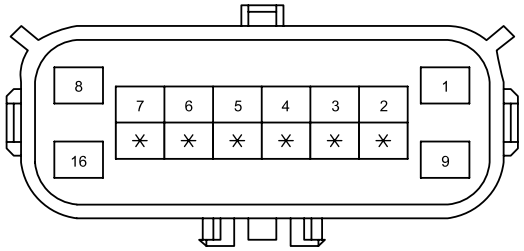

WIRE COLORS ARE INDICATED BY NUMBERS.

C-10
REAR NO.2 HARNESS-SHORT CORD

REAR NO.2 HARNESS

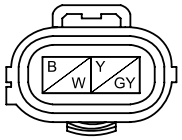

SHORT CORD

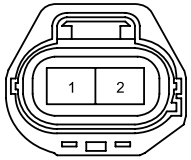

WIRE COLORS ARE INDICATED BY NUMBERS.

C-11
REAR HARNESS-REAR NO.2 HARNESS

REAR HARNESS REAR NO.2 HARNESS

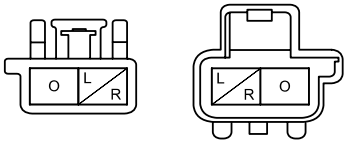

(REGULAR CAB)

REAR HARNESS REAR NO.2 HARNESS

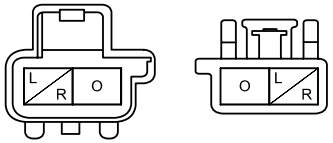

(DOUBLE CAB, FREESTYLE CAB)

C-12
INSTRUMENT PANEL HARNESS-INTERIOR LIGHT HARNESS

INSTRUMENT PANEL HARNESS

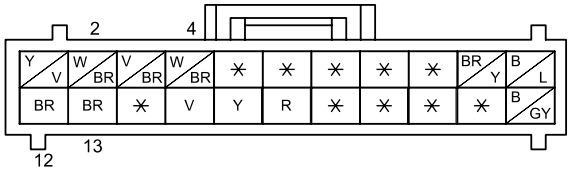

INTERIOR LIGHT HARNESS

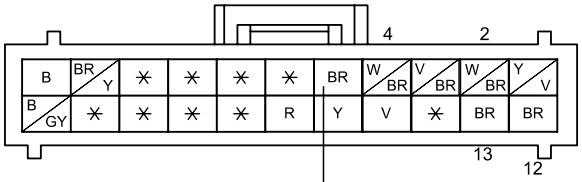

: NOT USED

C-13
FRONT HARNESS-REAR HARNESS

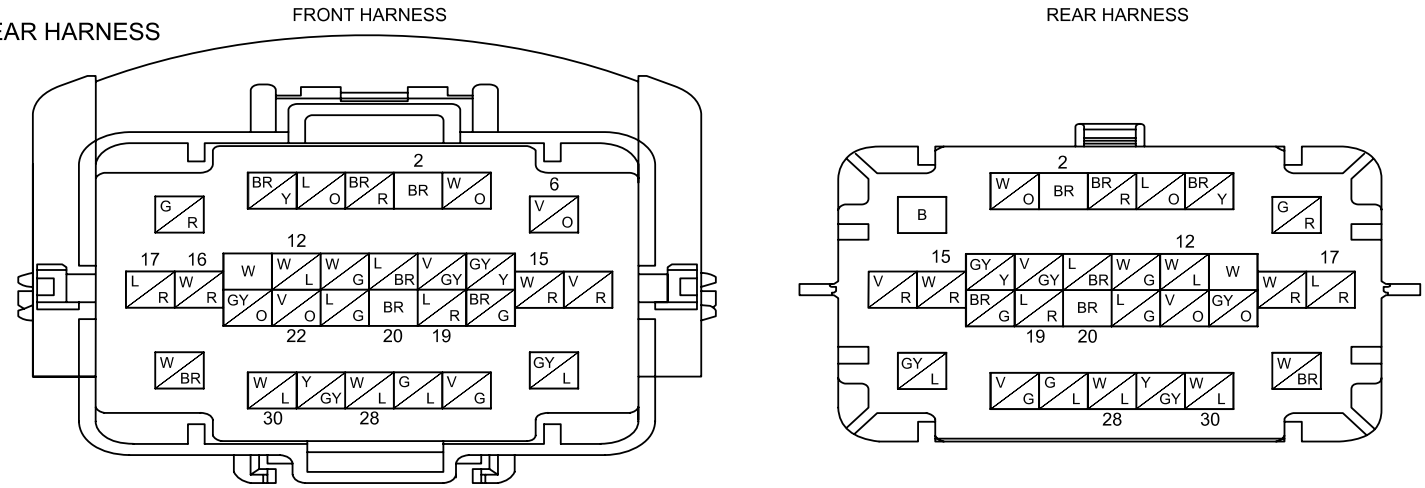

C-14
INSTRUMENT PANEL HARNESS-DOOR NO.1 HARNESS

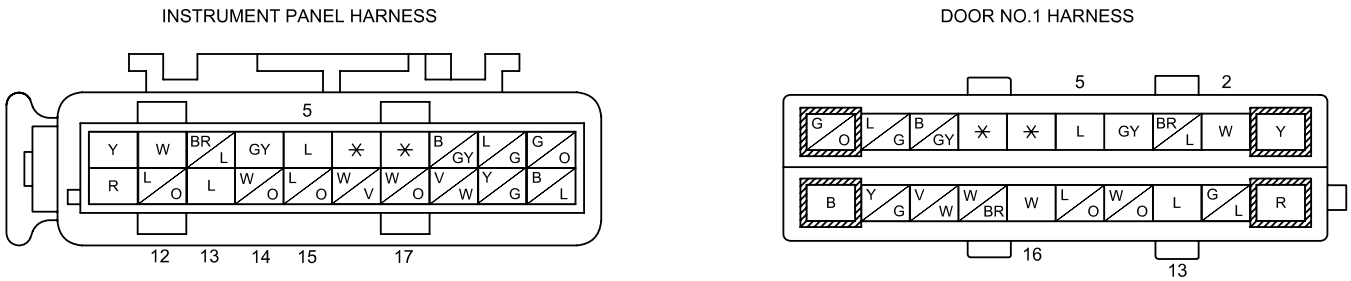

C-15
INSTRUMENT PANEL HARNESS-DOOR NO.1 HARNESS

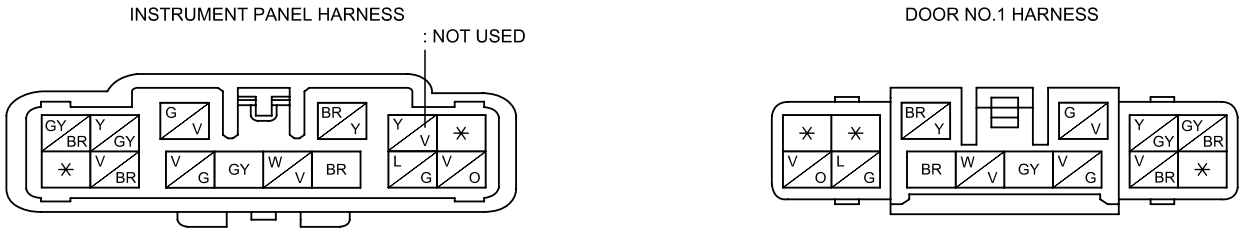

C-16
INSTRUMENT PANEL HARNESS-DOOR NO.2 HARNESS

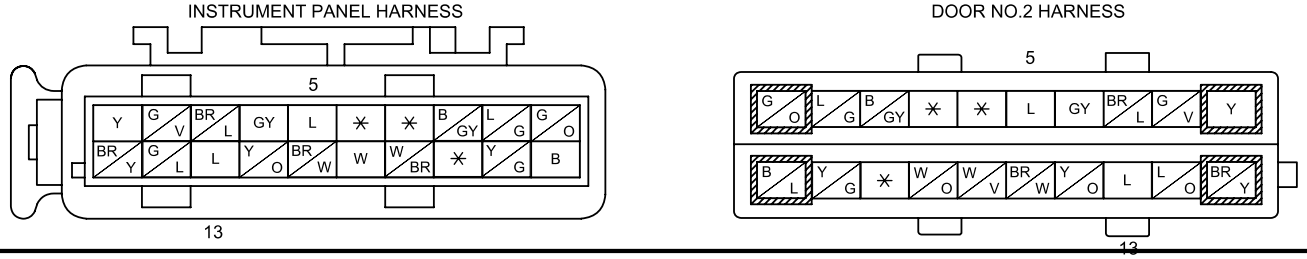

C-17
INSTRUMENT PANEL HARNESS-DOOR NO.2 HARNESS

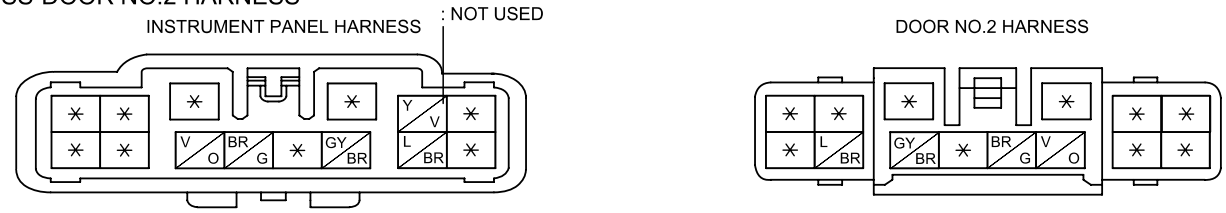

C-18
REAR HARNESS-DOOR NO.3 HARNESS

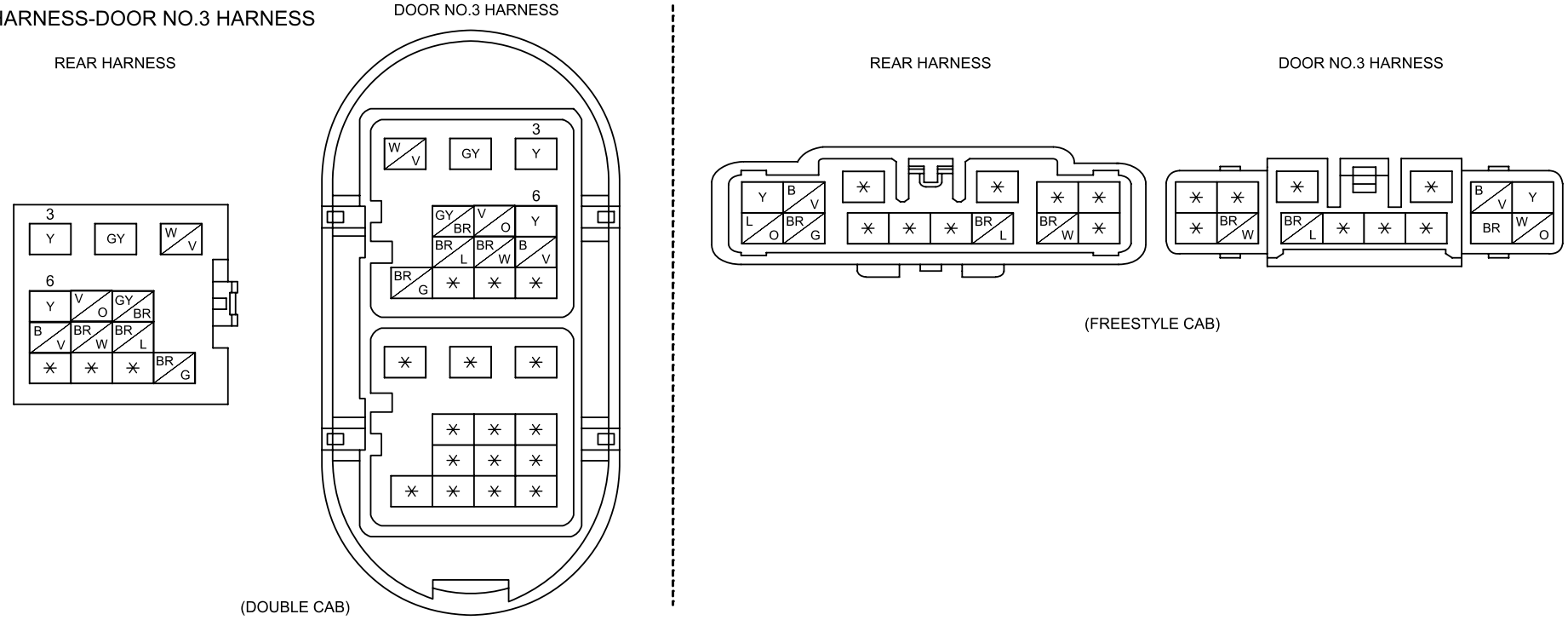

C-19
REAR HARNESS-DOOR NO.4 HARNESS

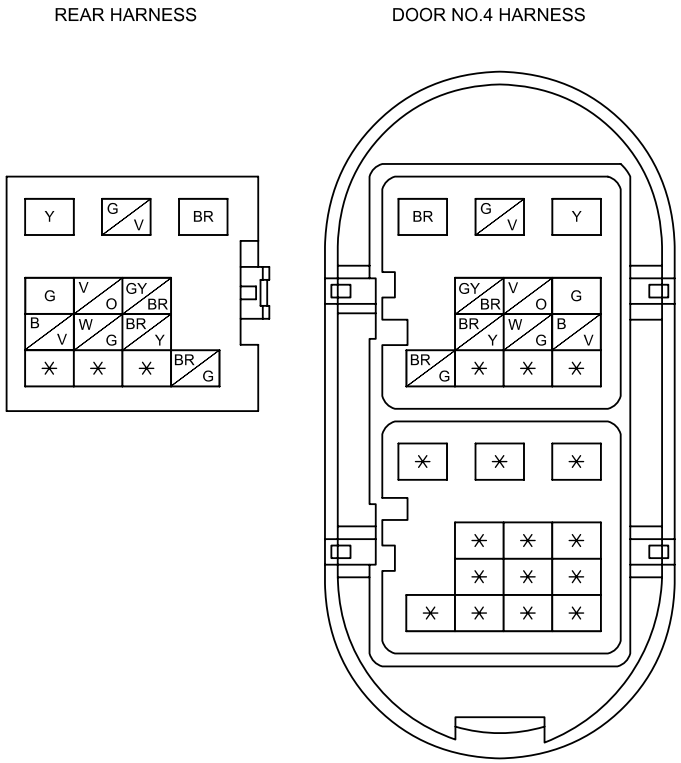

(DOUBLE CAB)

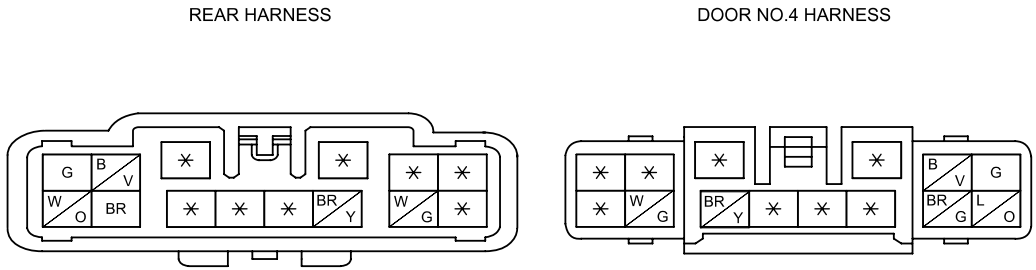

(FREESTYLE CAB)

C-20
REAR HARNESS-REAR NO.3 HARNESS

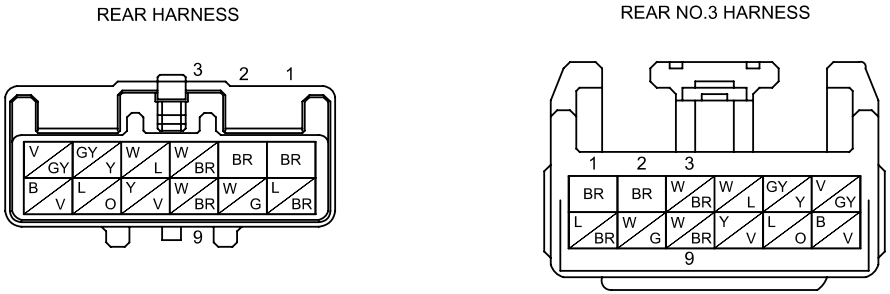

C-21
FRONT HARNESS-INSTRUMENT PANEL HARNESS

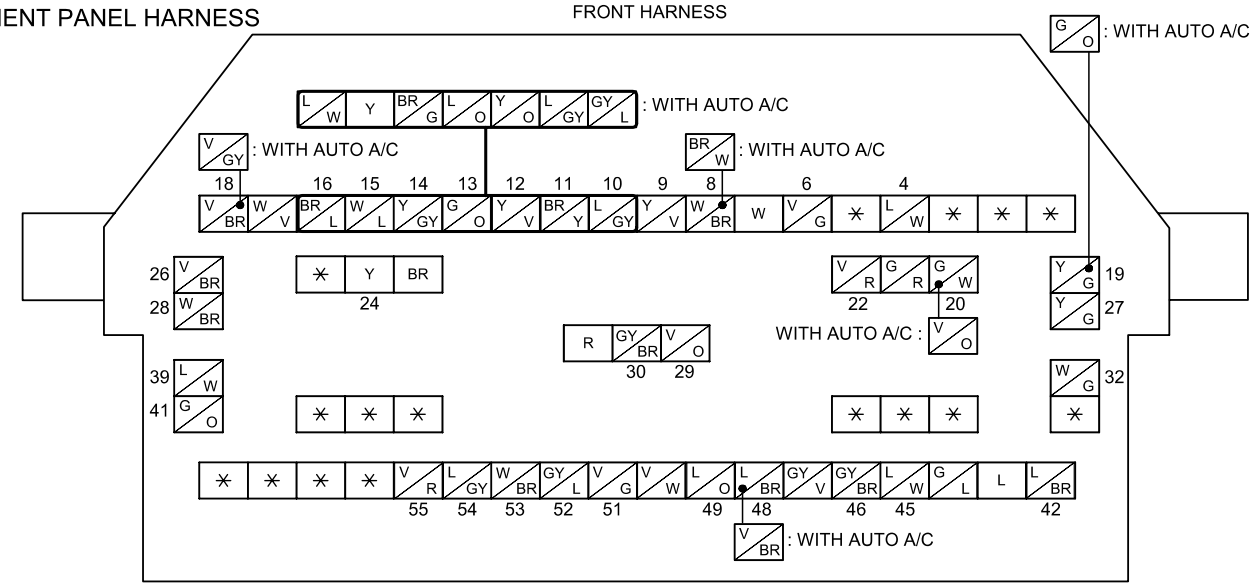

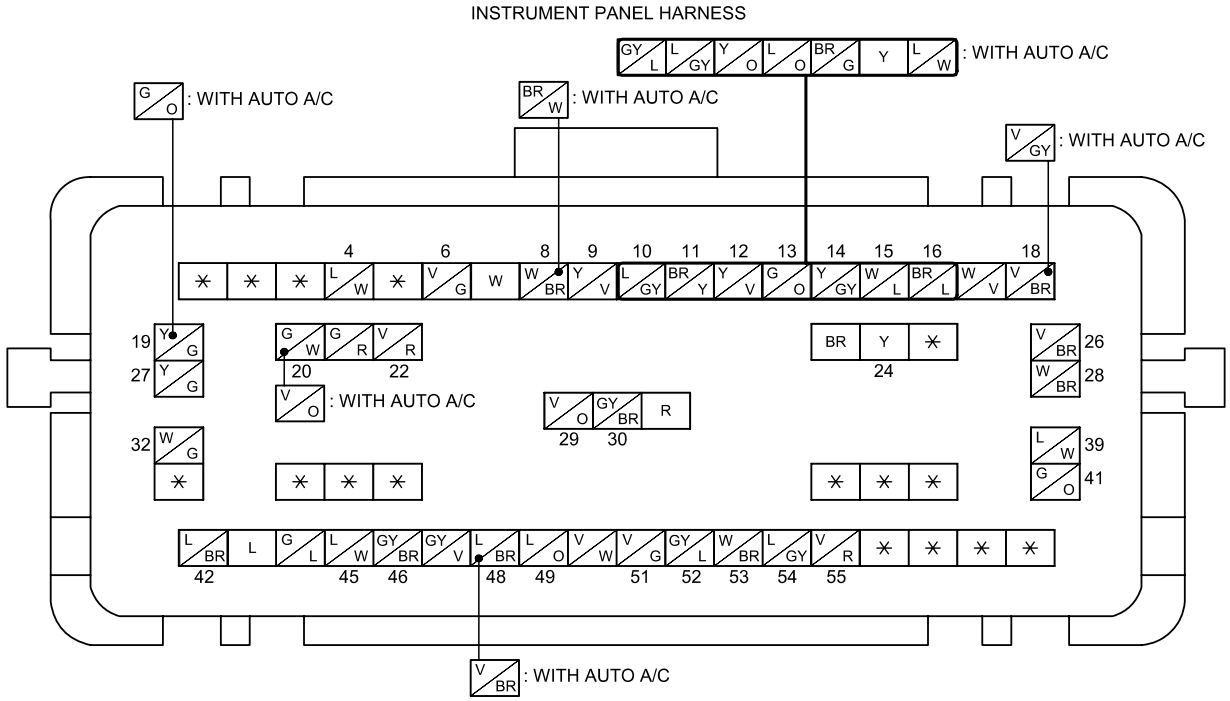

C-22
REAR HARNESS-REAR NO.2 HARNESS

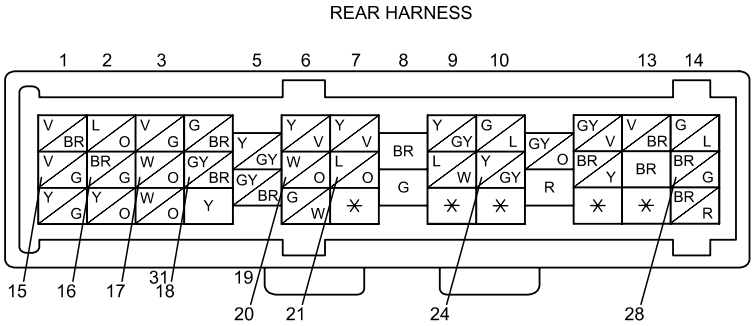

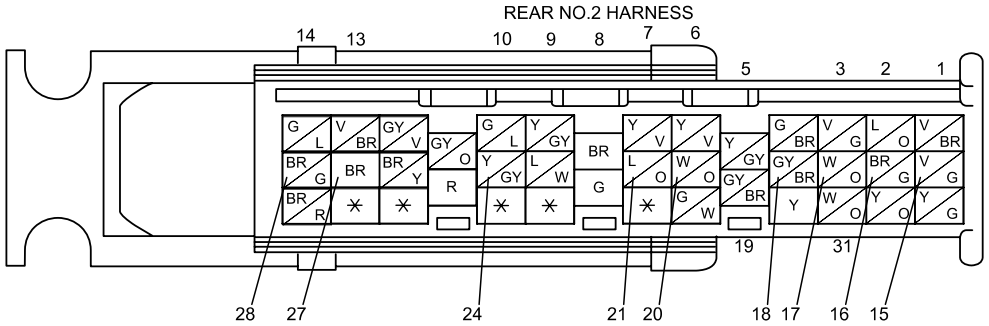

C-23
INSTRUMENT PANEL HARNESS-REAR HARNESS

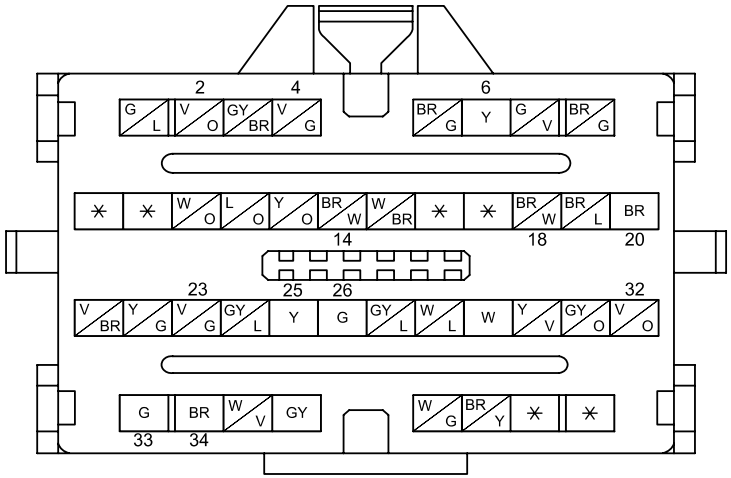

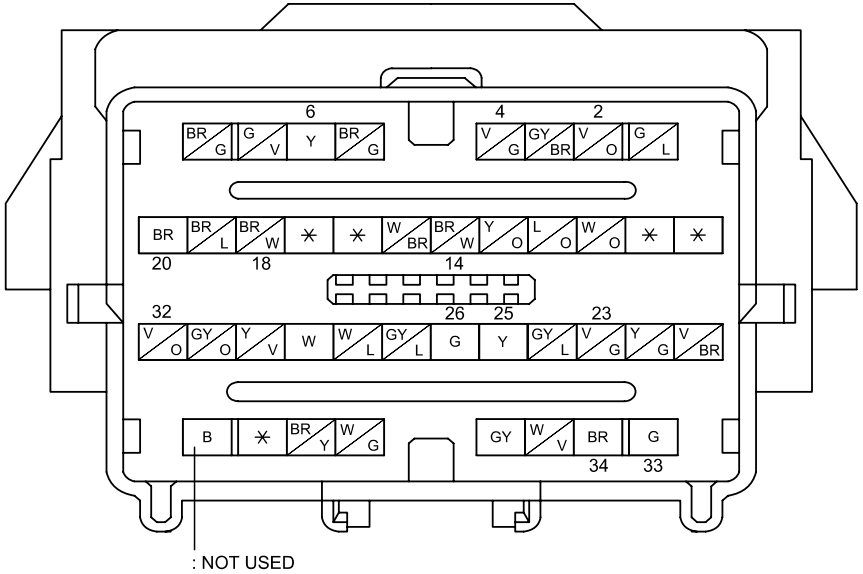

C-24
FRONT HARNESS-
ENGINE HARNESS

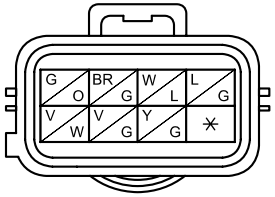

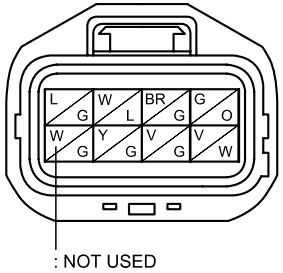

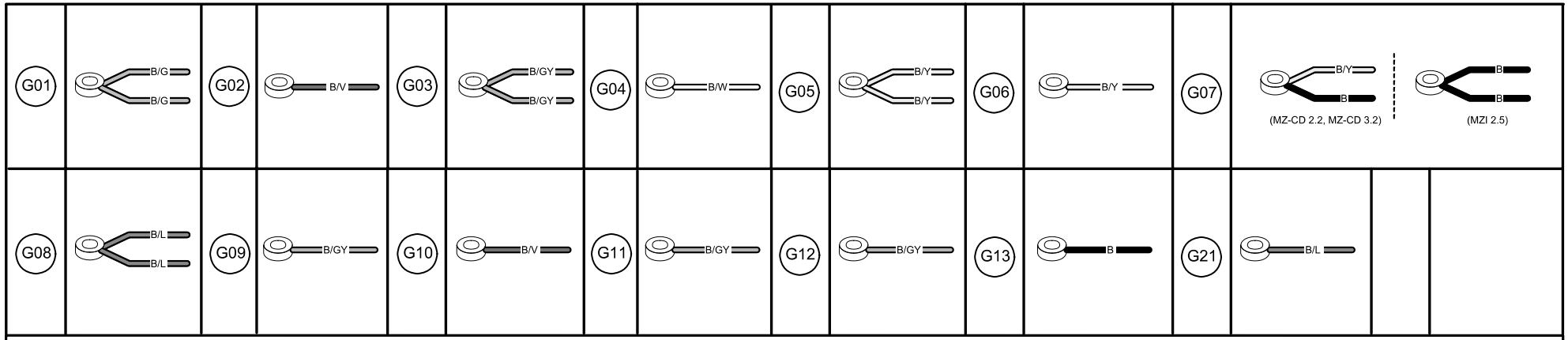

: MZ-CD 2.2, MZ-CD 3.2 I5
#1 : MZI 2.5

00G-1b

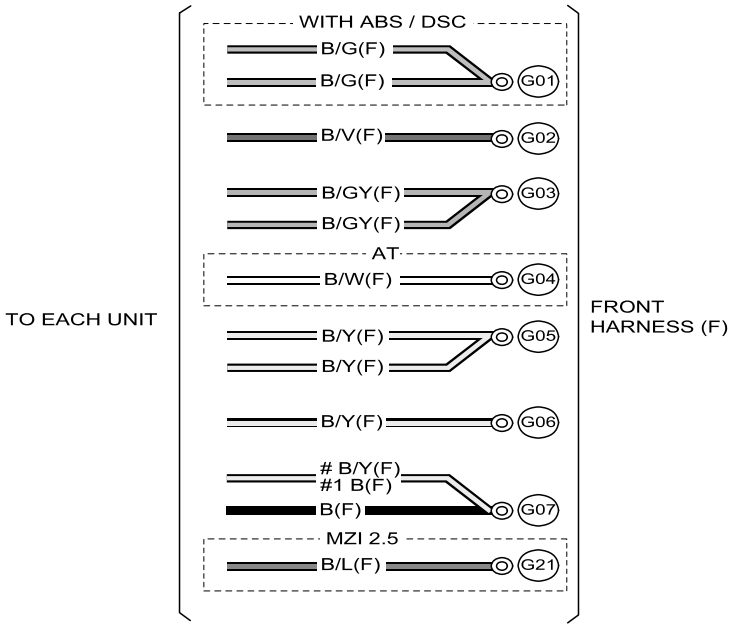

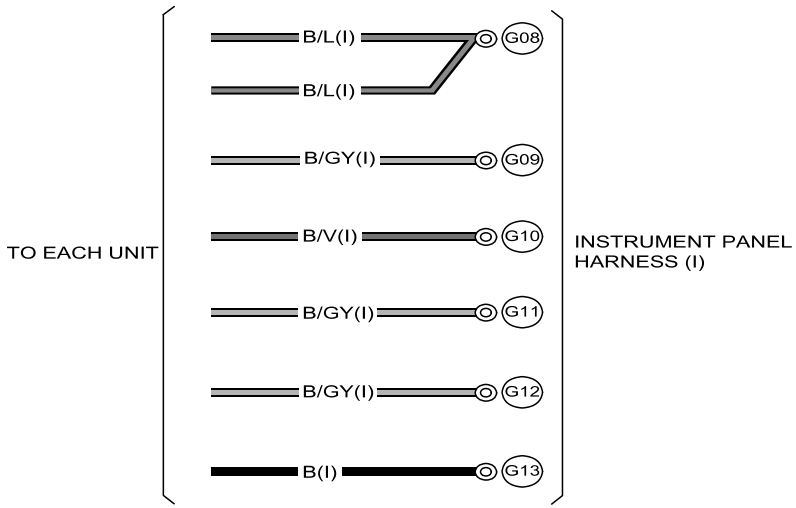

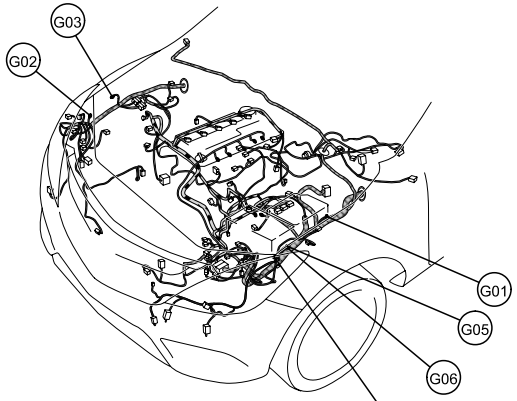

[MZ-CD 2.2, MZ-CD 3.2 I5]

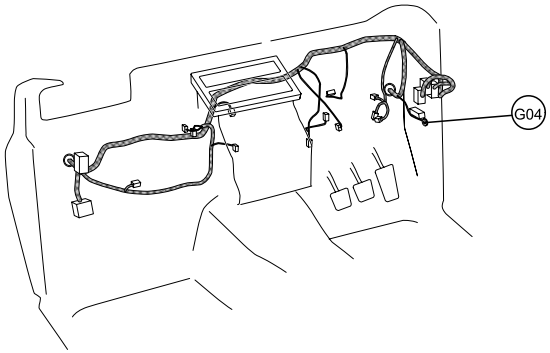

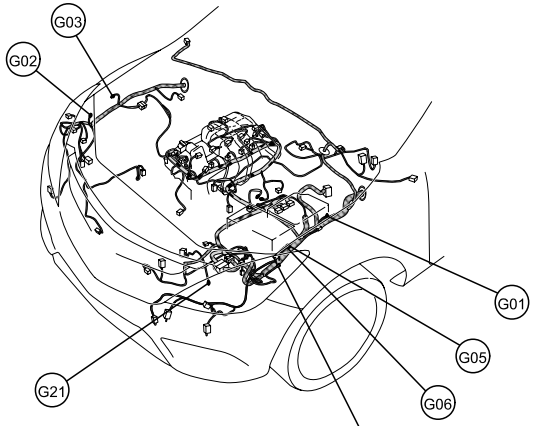

[MZI 2.5]

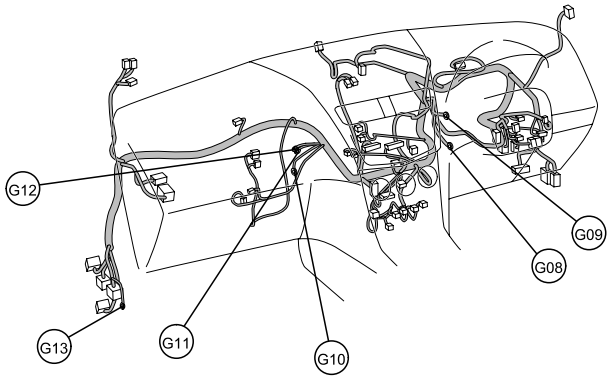

: FRONT HARNESS
: ENGINE HARNESS
: INSTRUMENT PANEL HARNESS

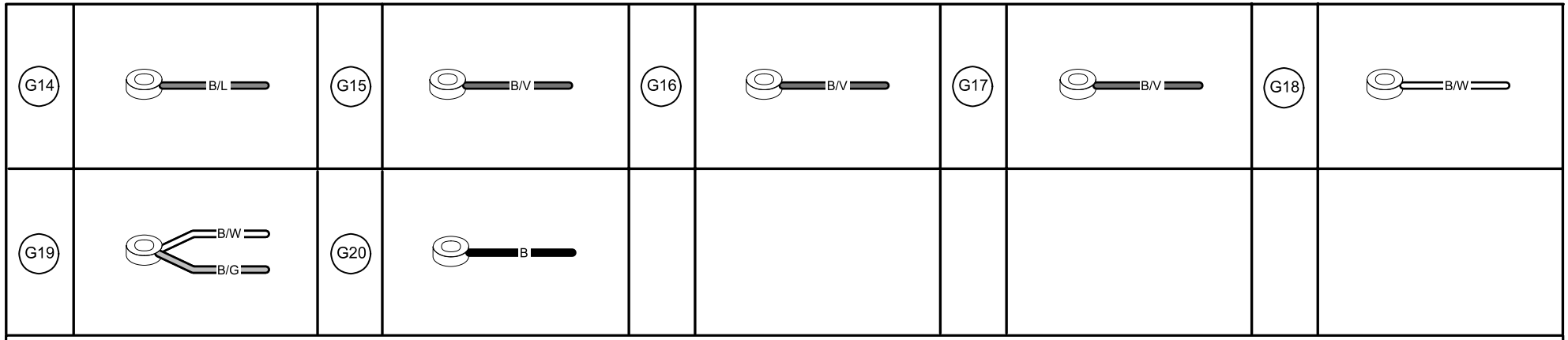
G14
B/L
G15
B/V
G16
B/V
G17
B/V
G18
B/W
G19
B/W
B/G
G20
B

00G-1a

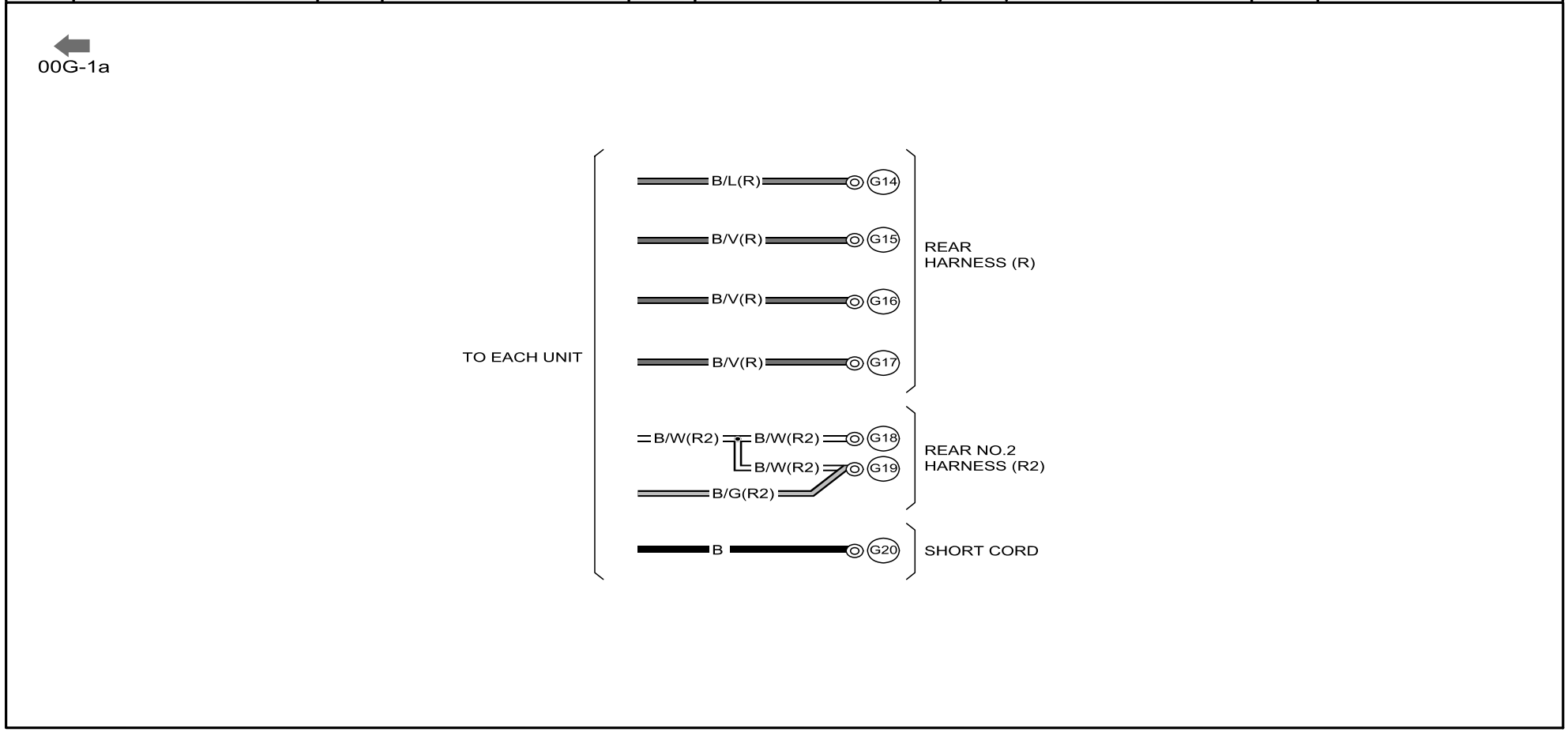
TO EACH UNIT
B/L(R)
G14
B/V(R)
G15
B/V(R)
G16
B/V(R)
G17
REAR
HARNESS (R)
B/W(R2)
B/W(R2)
G18
B/W(R2)
G19
B/G(R2)
REAR NO.2
HARNESS (R2)
B
G20
SHORT CORD

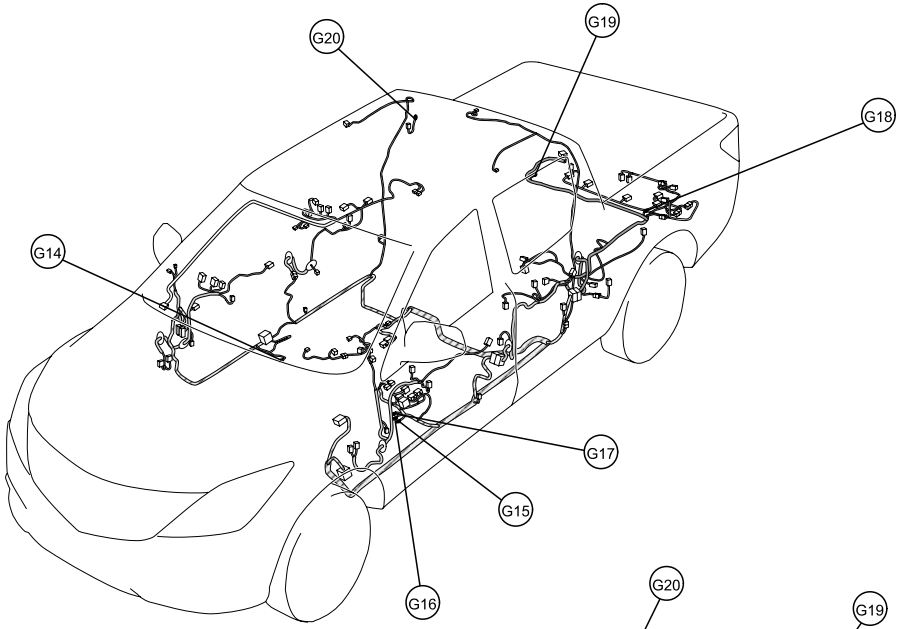

[DOUBLE CAB]

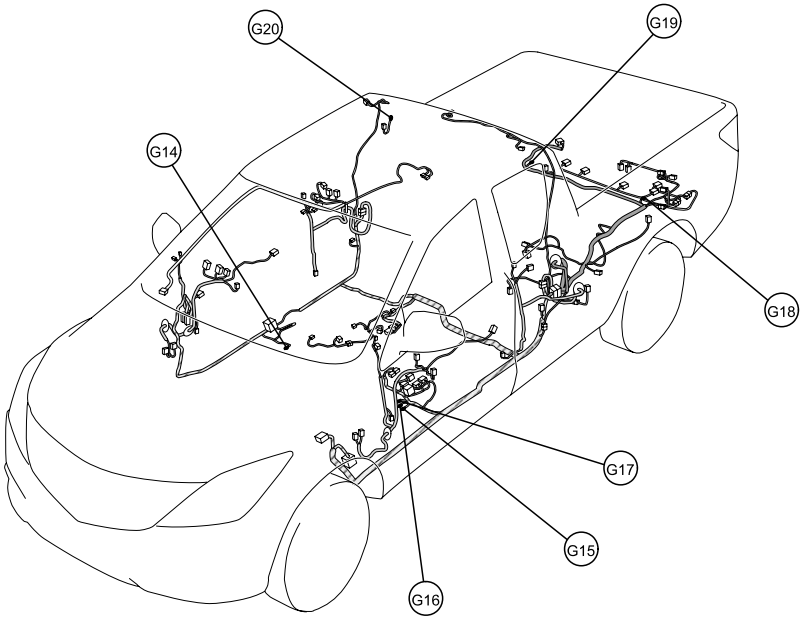

[FREESTYLE CAB]

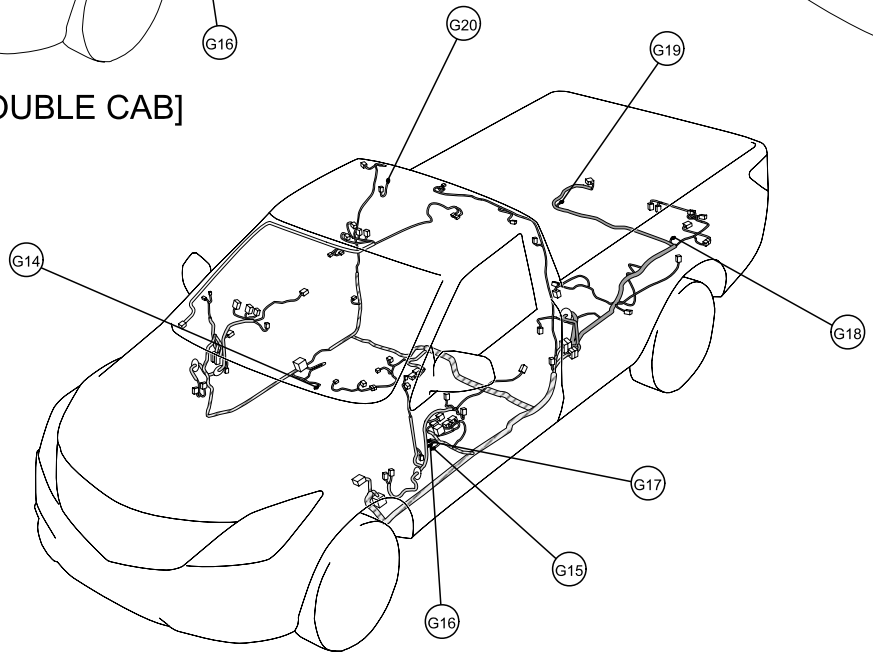

[REGULAR CAB]

: REAR HARNESS
: REAR NO.2 HARNESS
REAR NO.3 HARNESS
: DOOR HARNESS
: INTERIOR LIGHT HARNESS

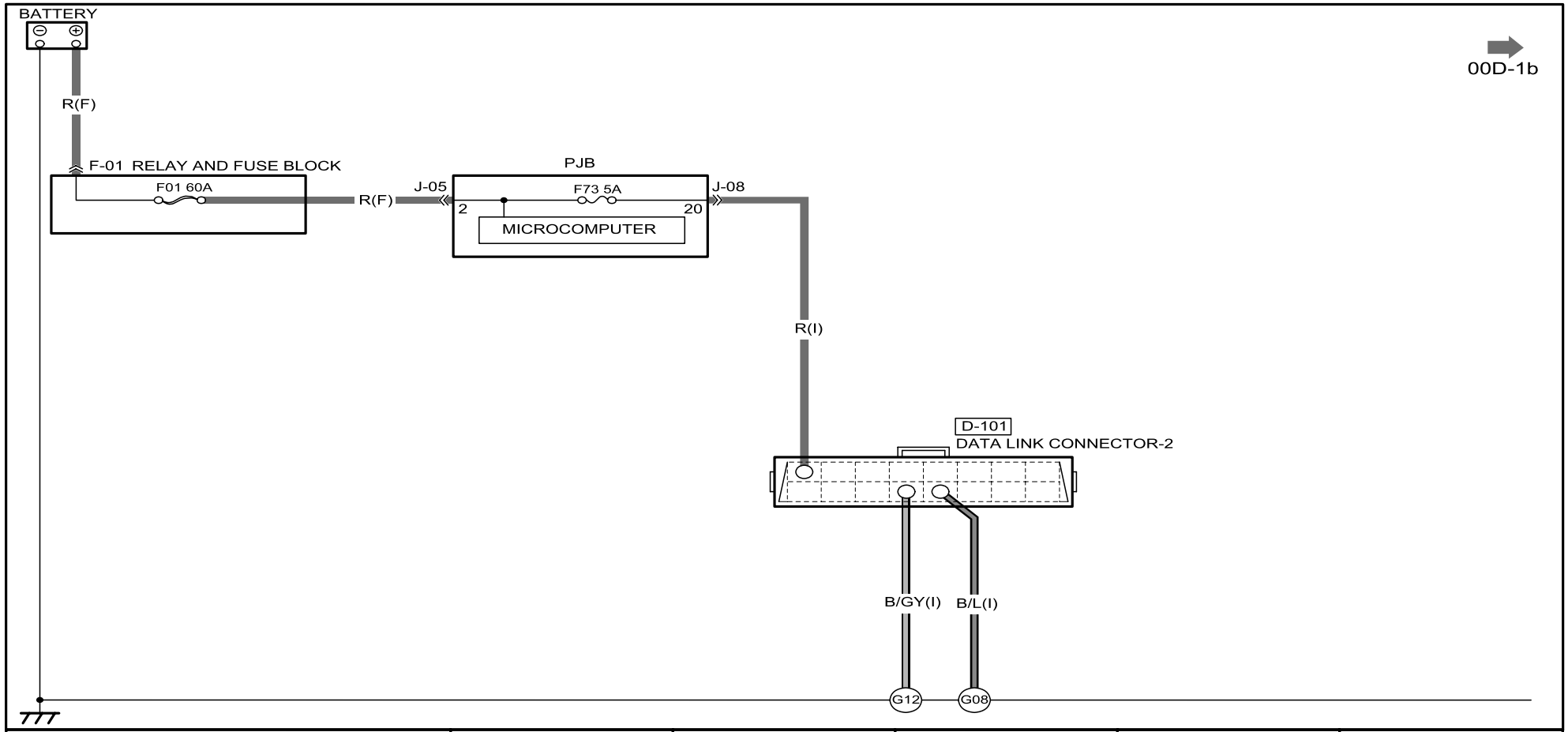

D-101
DATA LINK CONNECTOR-2

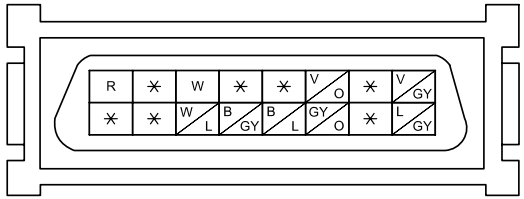

NOTE : SEEN FROM TERMINAL SIDE

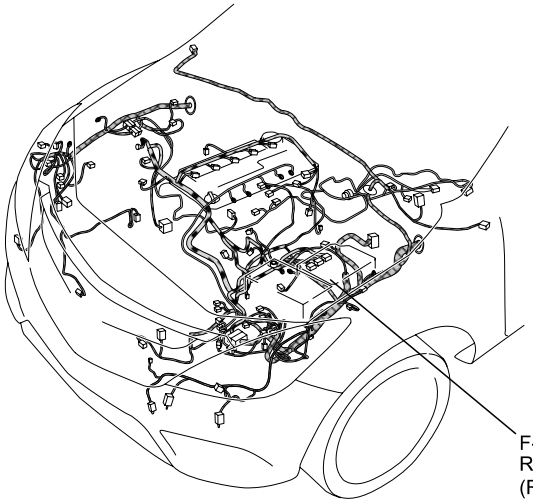

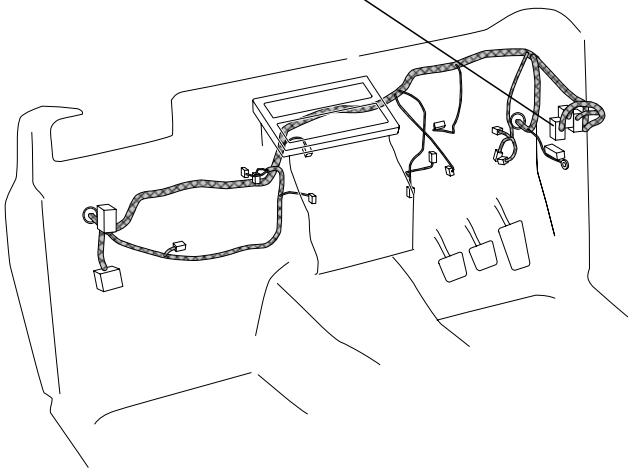

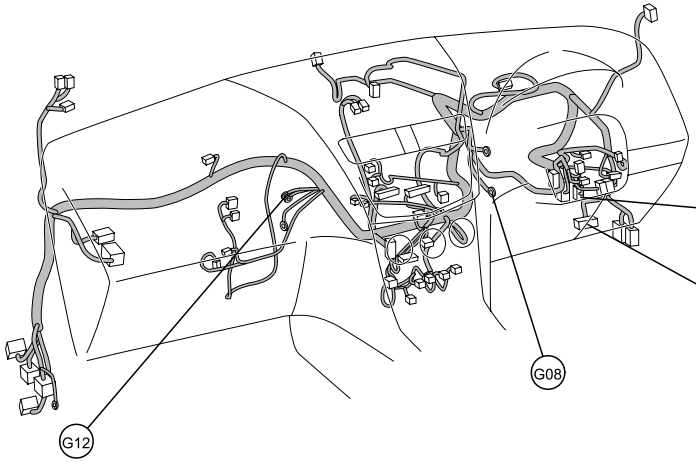

J-08
PJB
(REFER TO 00J SECTION)
[BLUE]

D-101
DATA LINK CONNECTOR-2

: FRONT HARNESS
: ENGINE HARNESS
: INSTRUMENT PANEL HARNESS

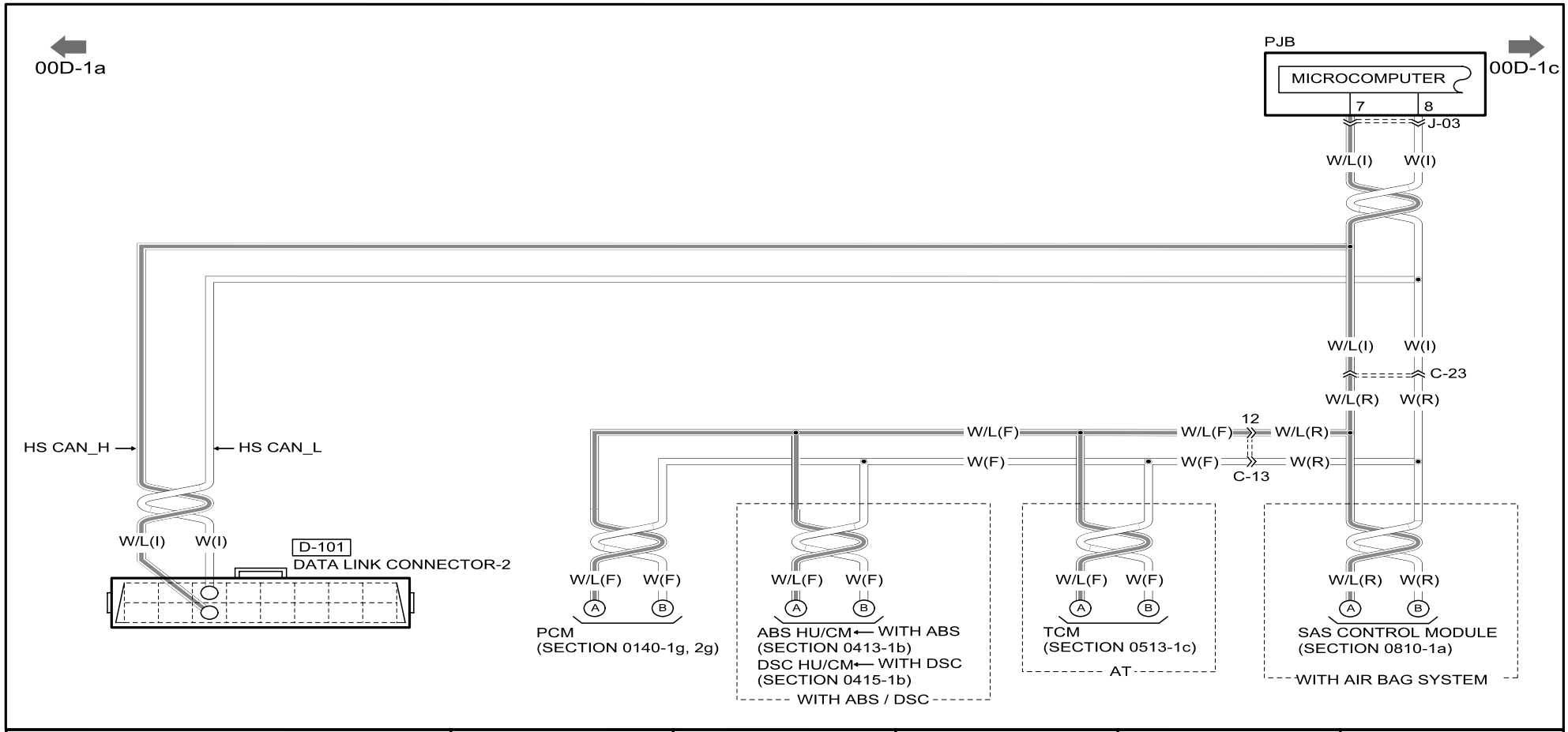

D-101
DATA LINK CONNECTOR-2

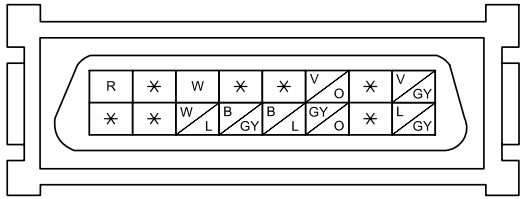

NOTE : SEEN FROM TERMINAL SIDE

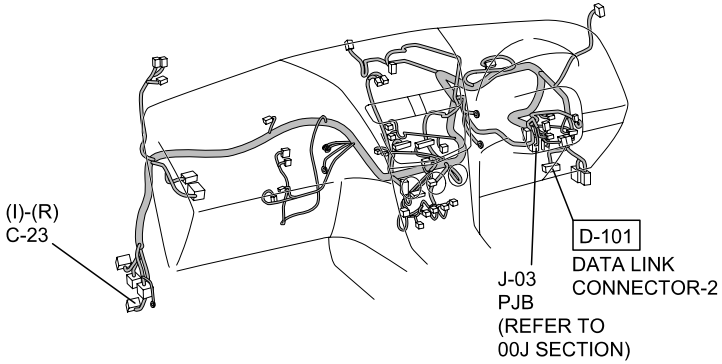

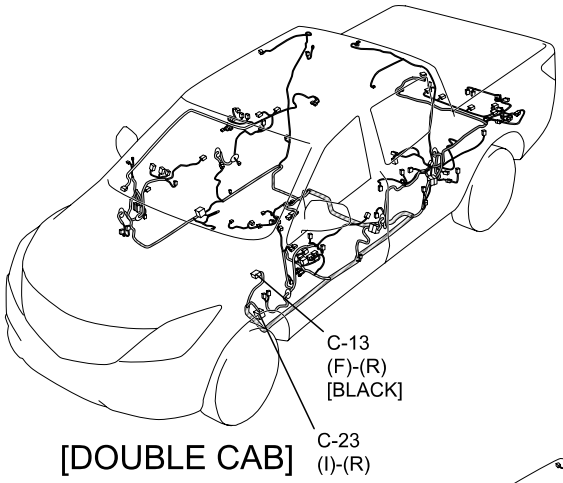

[DOUBLE CAB]

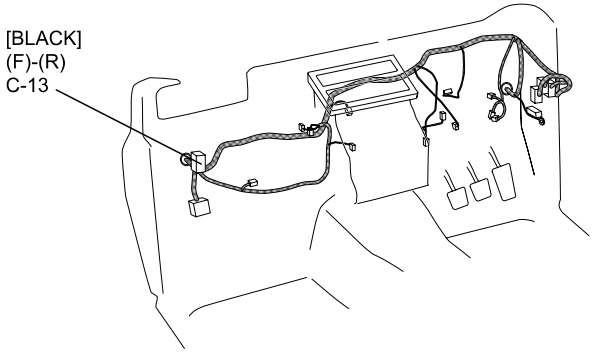

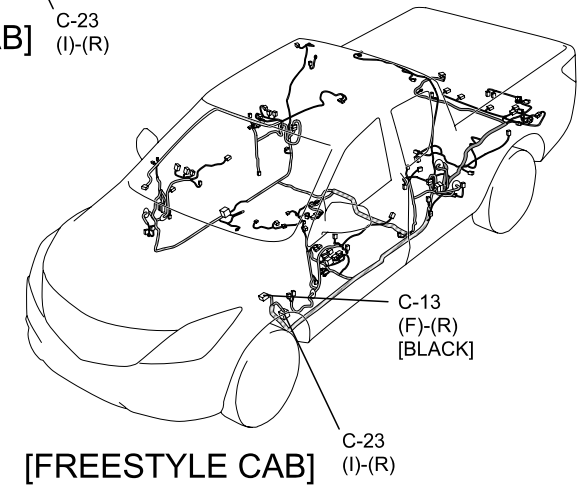

[FREESTYLE CAB]

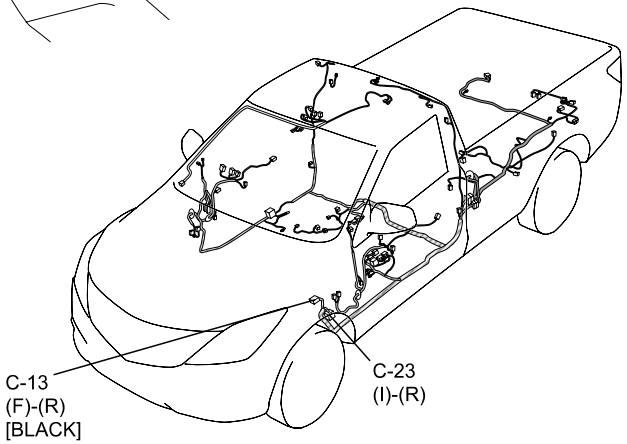

[REGULAR CAB]

: FRONT HARNESS
: REAR HARNESS
: REAR NO.2 HARNESS
REAR NO.3 HARNESS
: DOOR HARNESS
: INTERIOR LIGHT HARNESS
: INSTRUMENT PANEL HARNESS

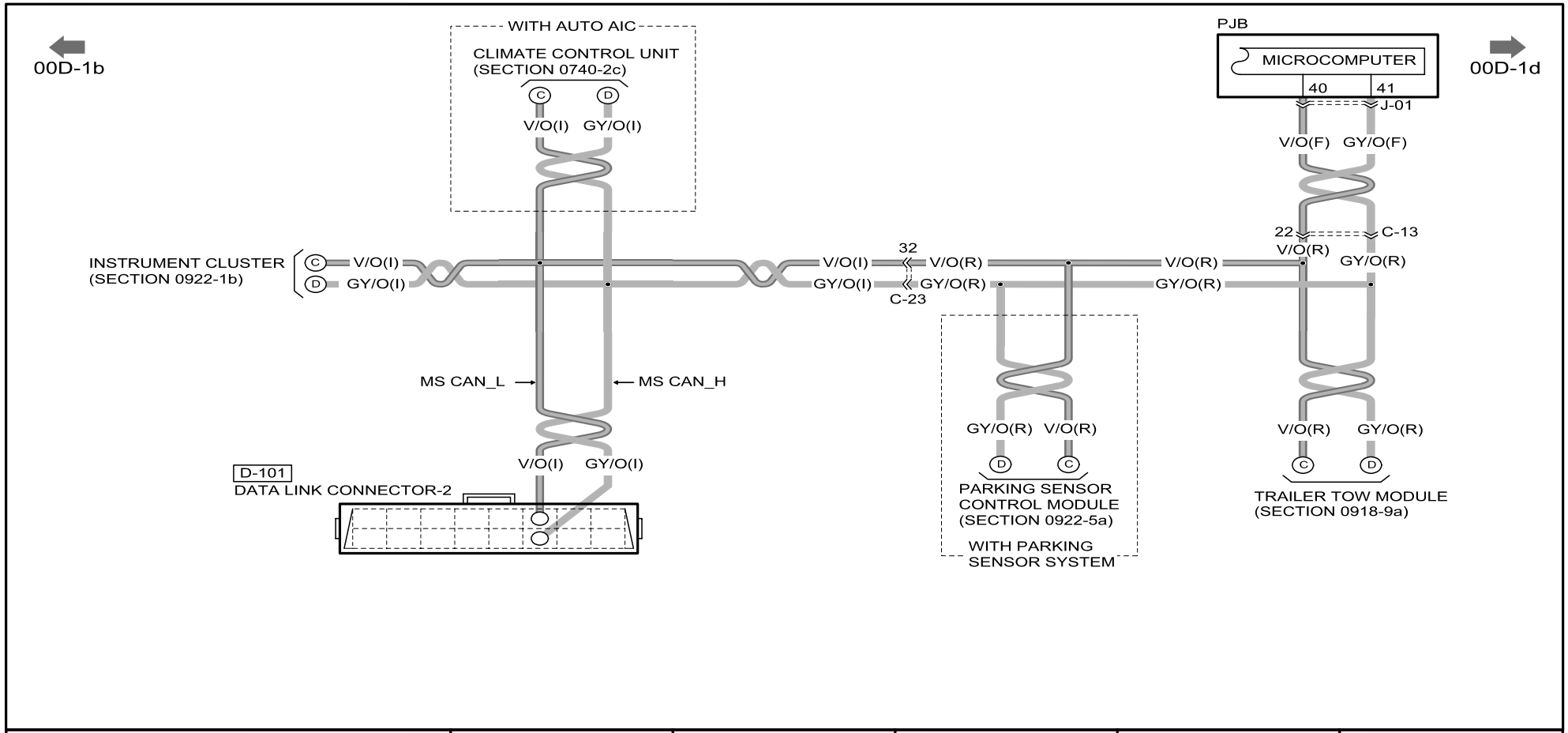

D-101
DATA LINK CONNECTOR-2

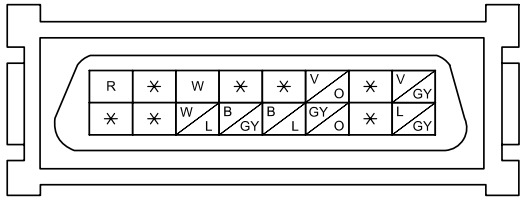

NOTE : SEEN FROM TERMINAL SIDE

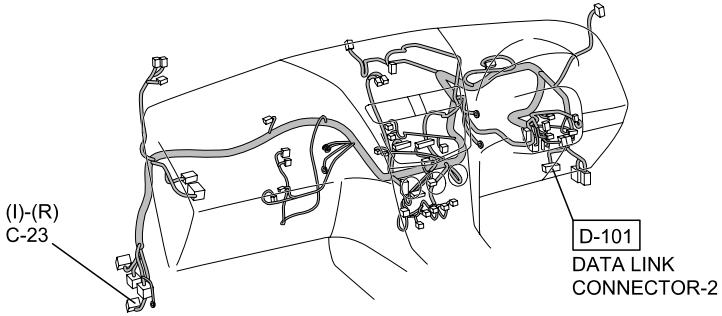

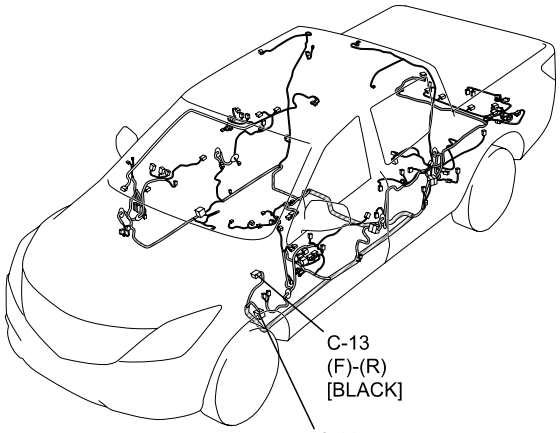

[DOUBLE CAB]

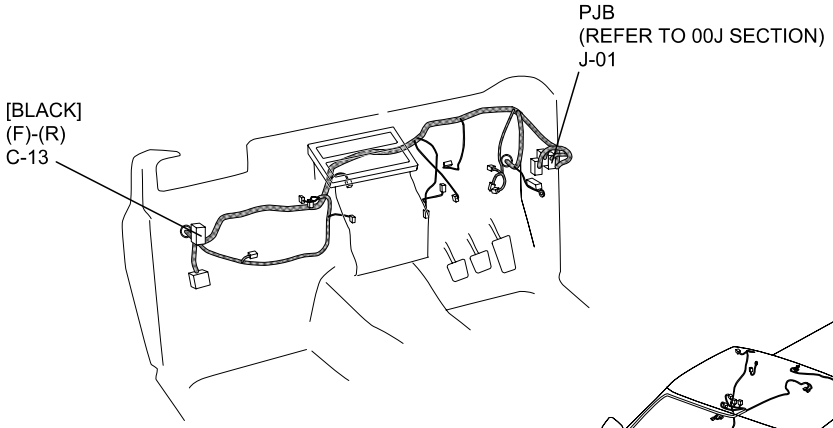

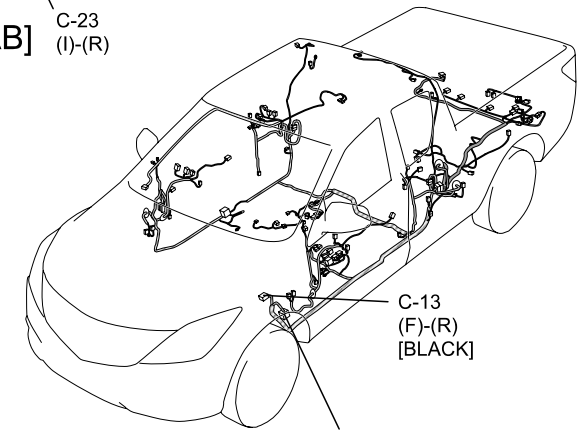

[FREESTYLE CAB]

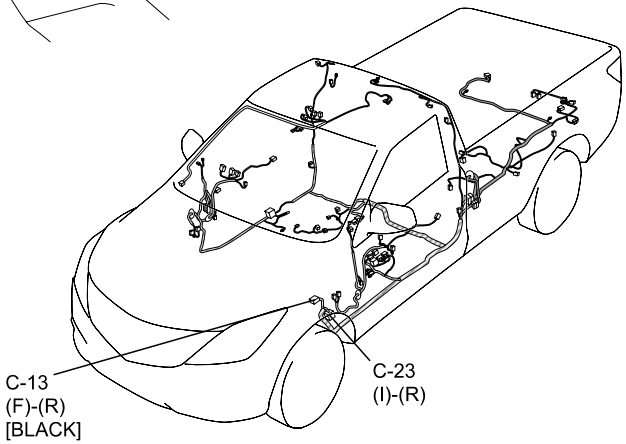

[REGULAR CAB]

: FRONT HARNESS
: REAR HARNESS
: REAR NO.2 HARNESS
REAR NO.3 HARNESS
: DOOR HARNESS
: INTERIOR LIGHT HARNESS
: INSTRUMENT PANEL HARNESS

: Australian specs.

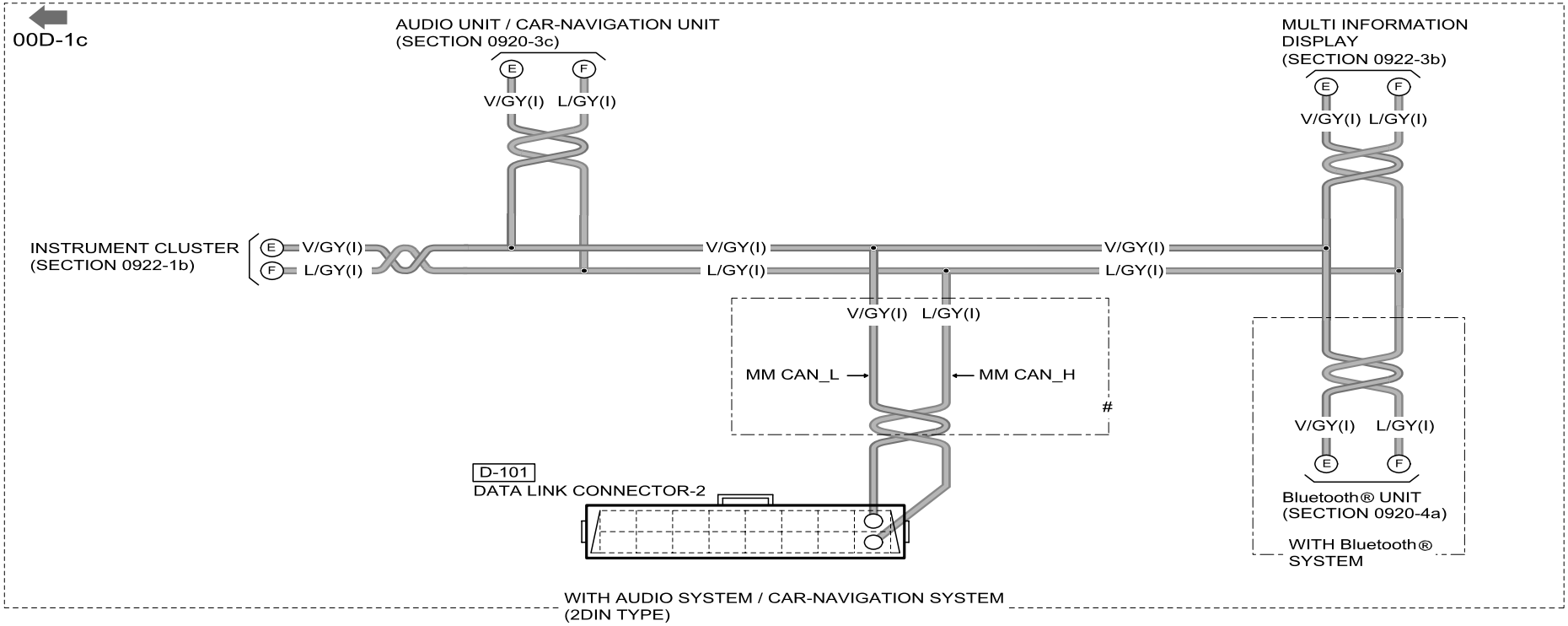

D-101
DATA LINK CONNECTOR-2

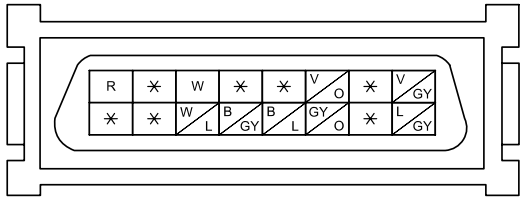

NOTE : SEEN FROM TERMINAL SIDE

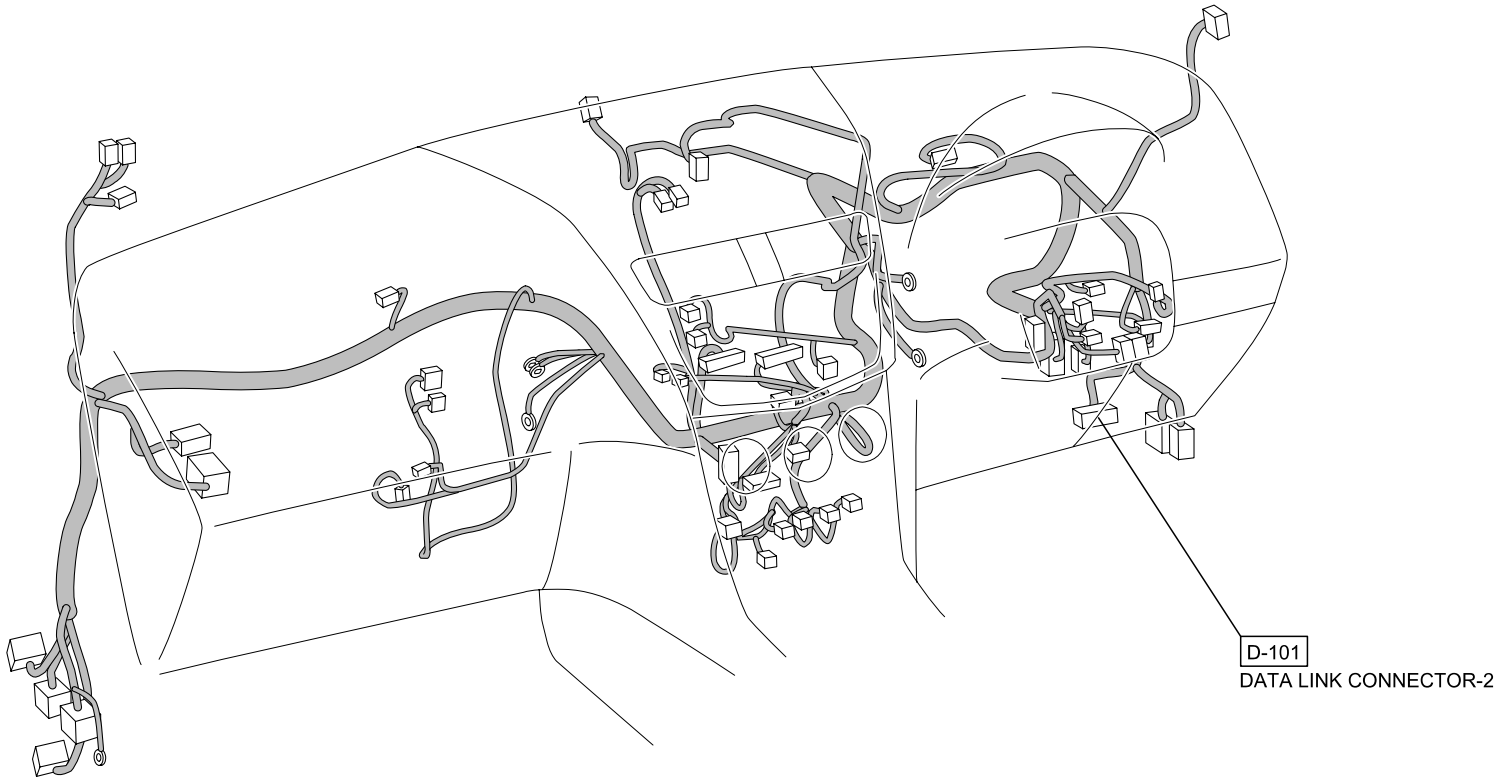

: INSTRUMENT PANEL HARNESS

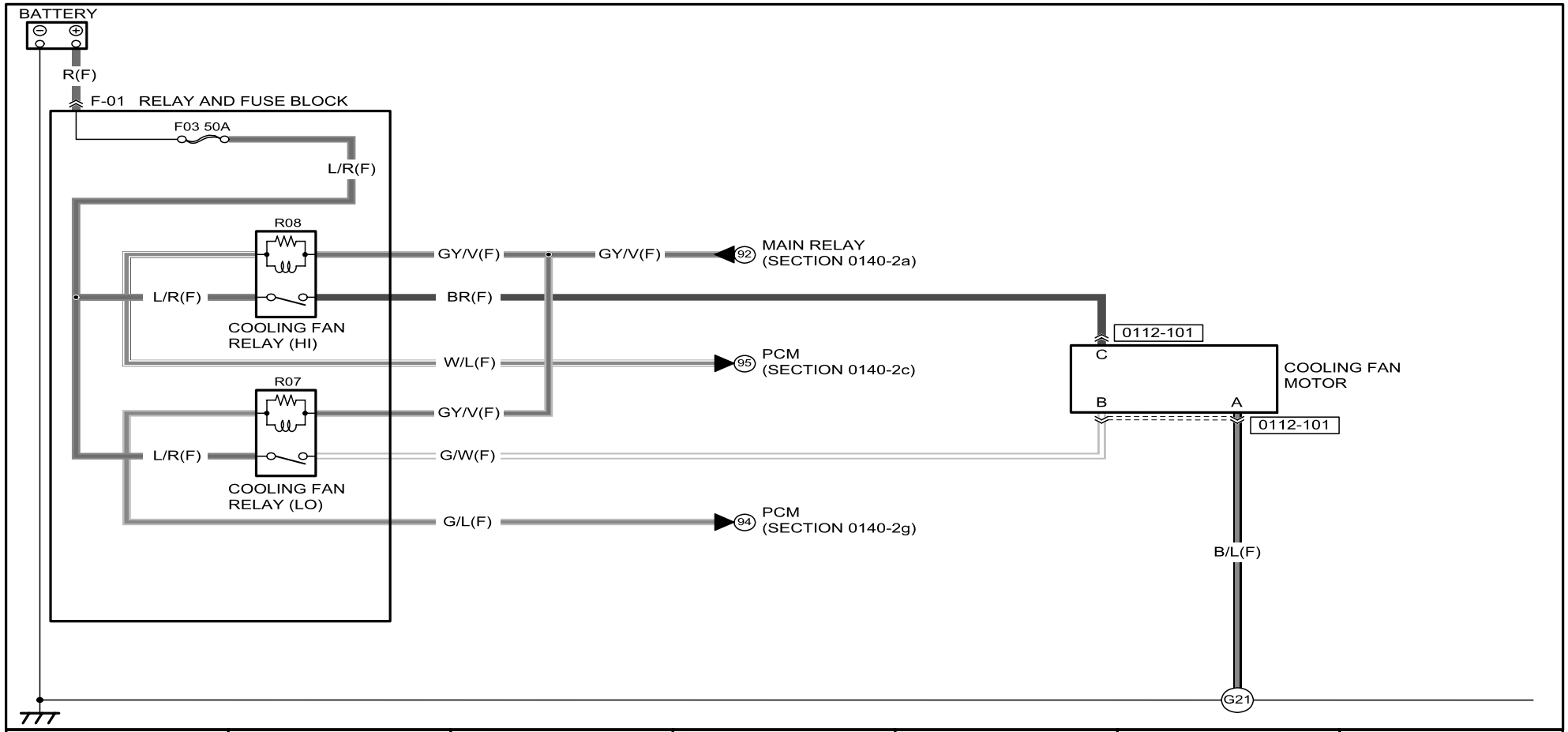

0112-101
COOLING FAN MOTOR

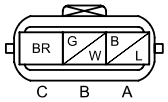

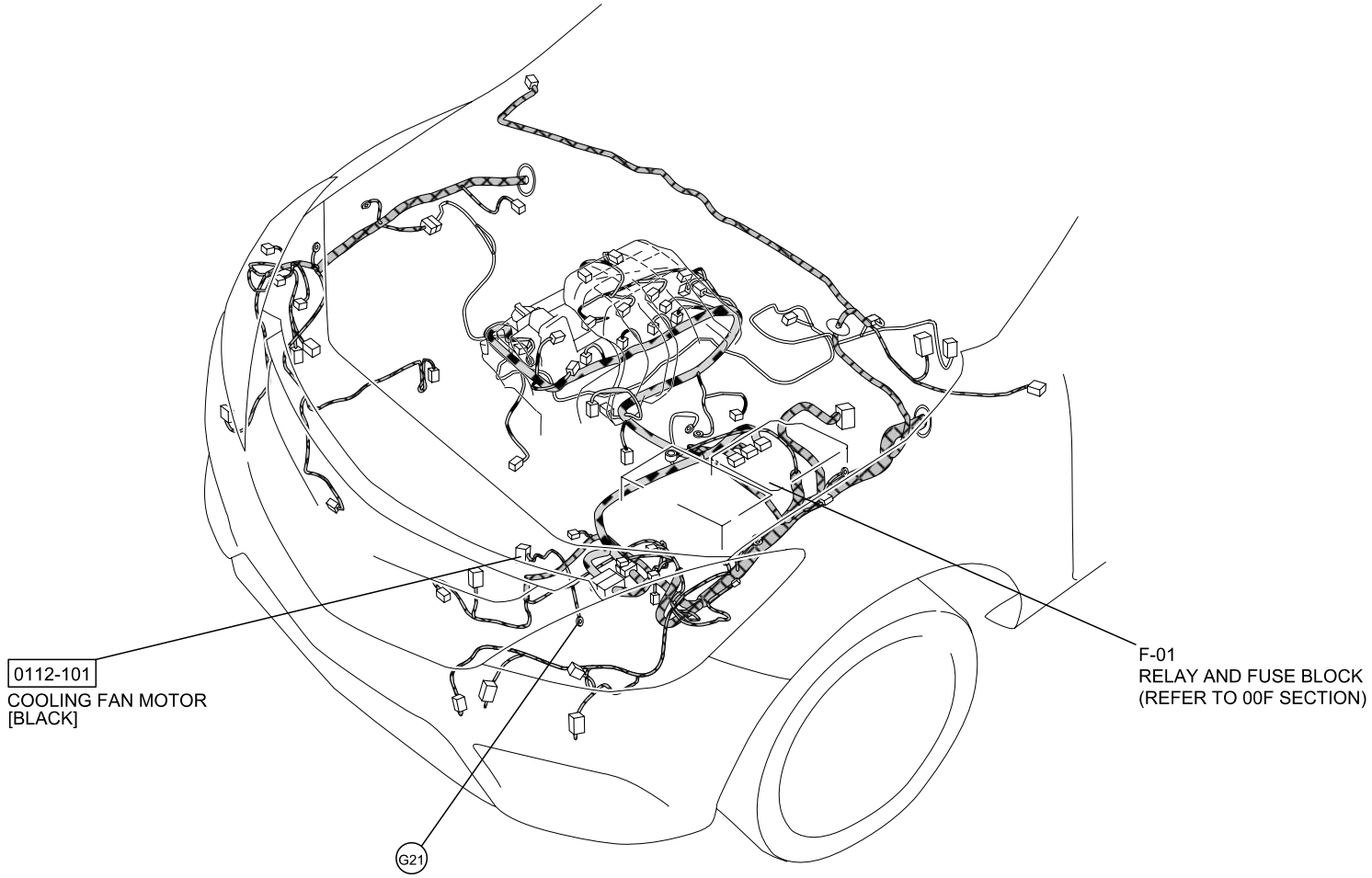

: FRONT HARNESS
: ENGINE HARNESS

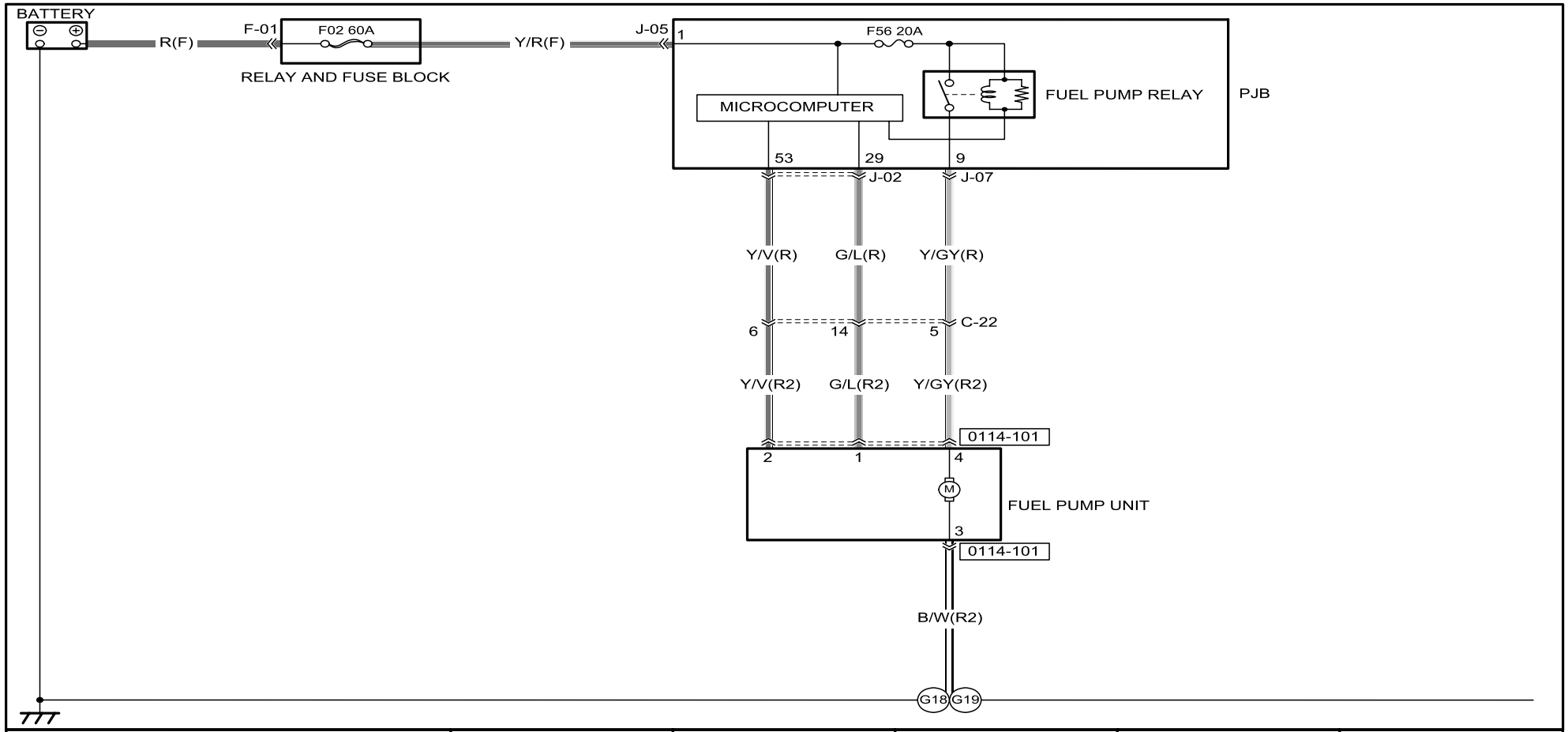

0114-101
FUEL PUMP UNIT

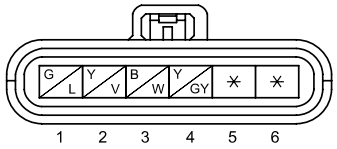

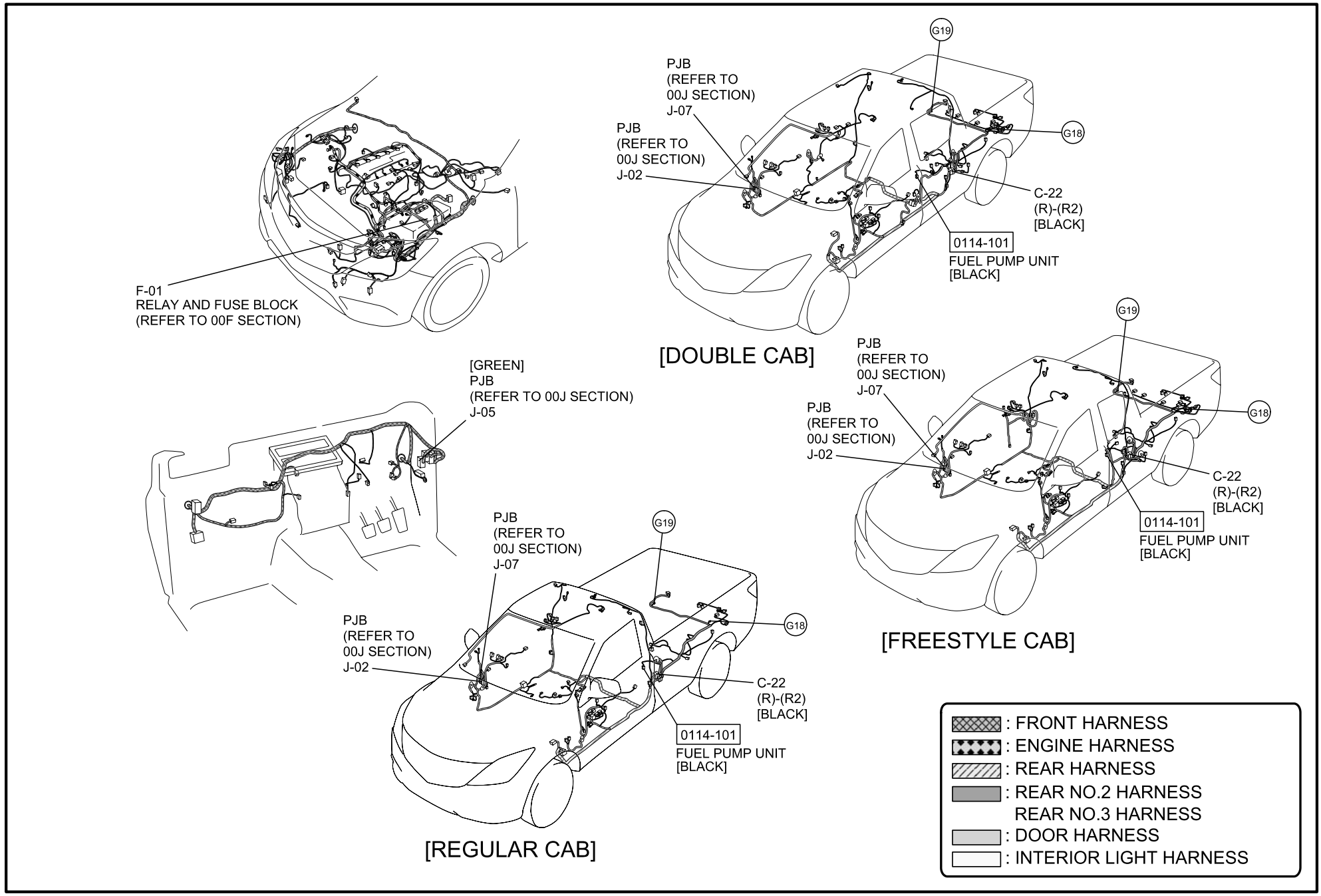
F-01
RELAY AND FUSE BLOCK
(REFER TO 00F SECTION)
PJB
(REFER TO
00J SECTION)
J-07
PJB
(REFER TO
00J SECTION)
J-02
G19
G18
C-22
(R)-(R2)
[BLACK]
0114-101
FUEL PUMP UNIT
[BLACK]
[DOUBLE CAB]
[GREEN]
PJB
(REFER TO 00J SECTION)
J-05
PJB
(REFER TO
00J SECTION)
J-07
PJB
(REFER TO
00J SECTION)
J-02
G19
G18
C-22
(R)-(R2)
[BLACK]
0114-101
FUEL PUMP UNIT
[BLACK]
[FREESTYLE CAB]
PJB
(REFER TO
00J SECTION)
J-07
PJB
(REFER TO
00J SECTION)
J-02
G19
G18
C-22
(R)-(R2)
[BLACK]
0114-101
FUEL PUMP UNIT
[BLACK]
[REGULAR CAB]
: FRONT HARNESS
: ENGINE HARNESS
: REAR HARNESS
: REAR NO.2 HARNESS
REAR NO.3 HARNESS
: DOOR HARNESS
: INTERIOR LIGHT HARNESS

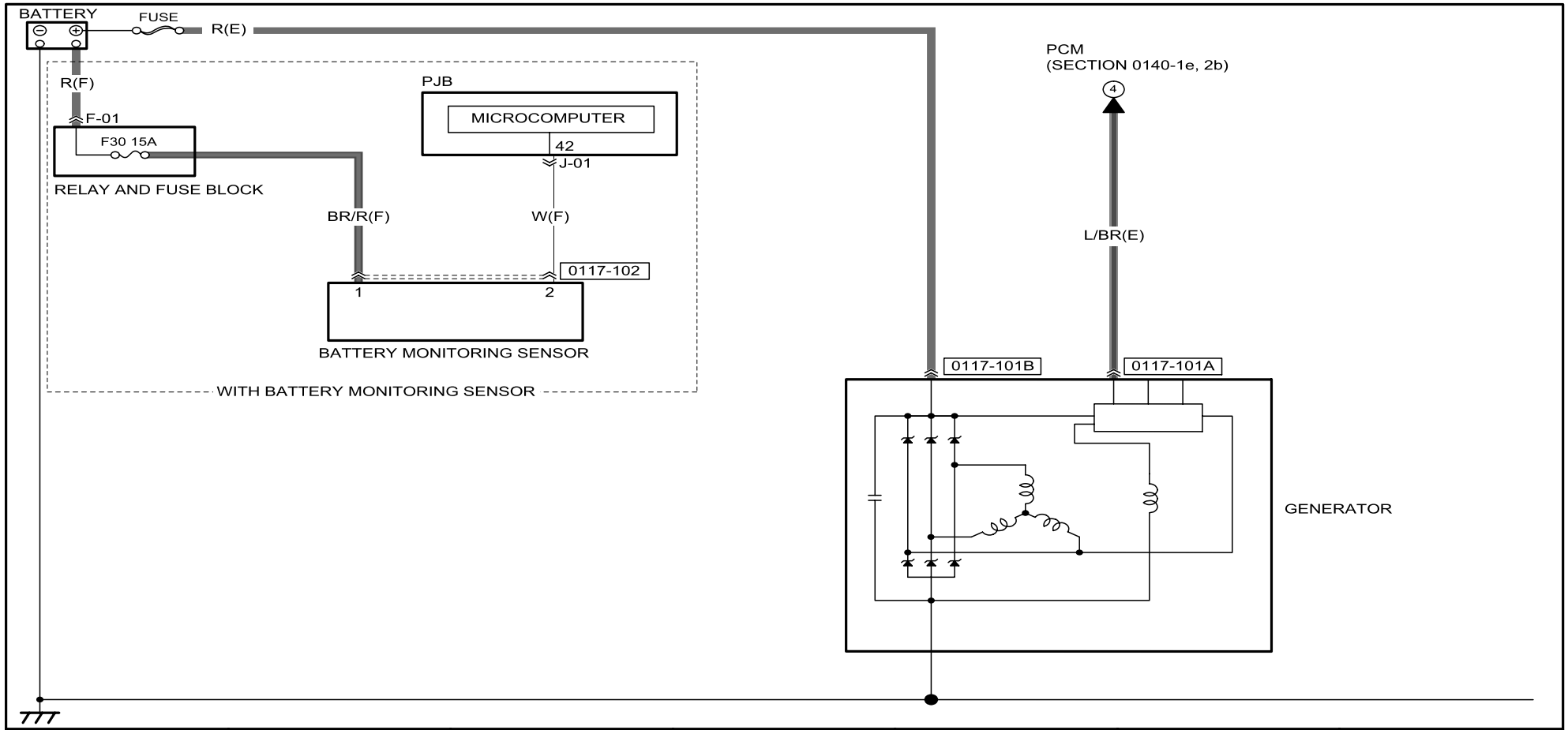

0117-101A GENERATOR	0117-101B GENERATOR	0117-102 BATTERY MONITORING SENSOR				
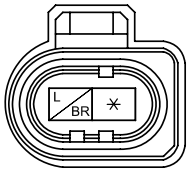	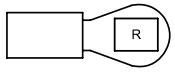	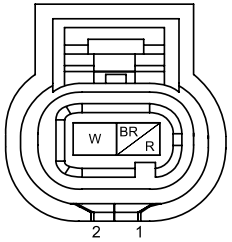				

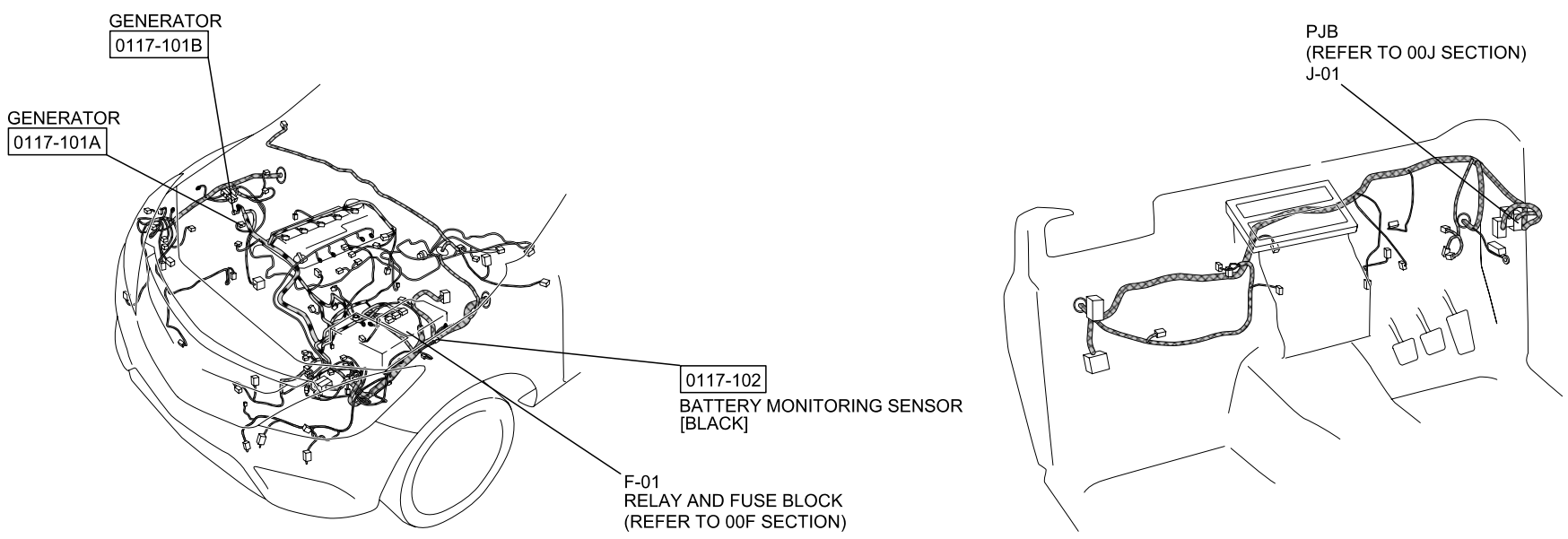

[MZ-CD 2.2, MZ-CD 3.2 I5]

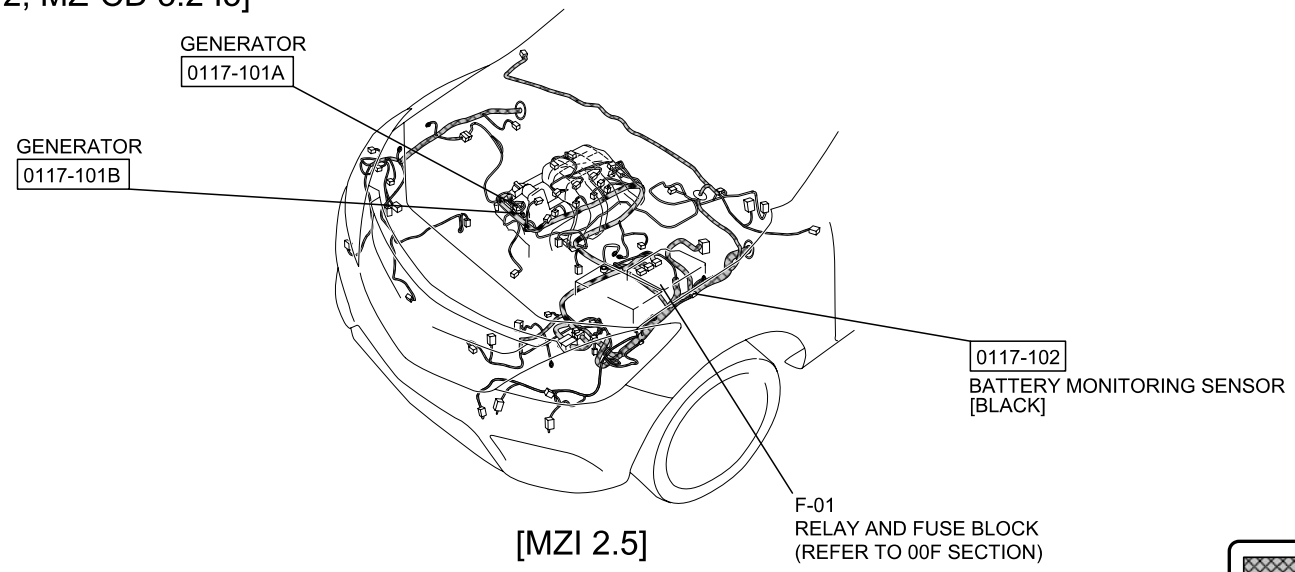

[MZI 2.5]

: FRONT HARNESS
: ENGINE HARNESS

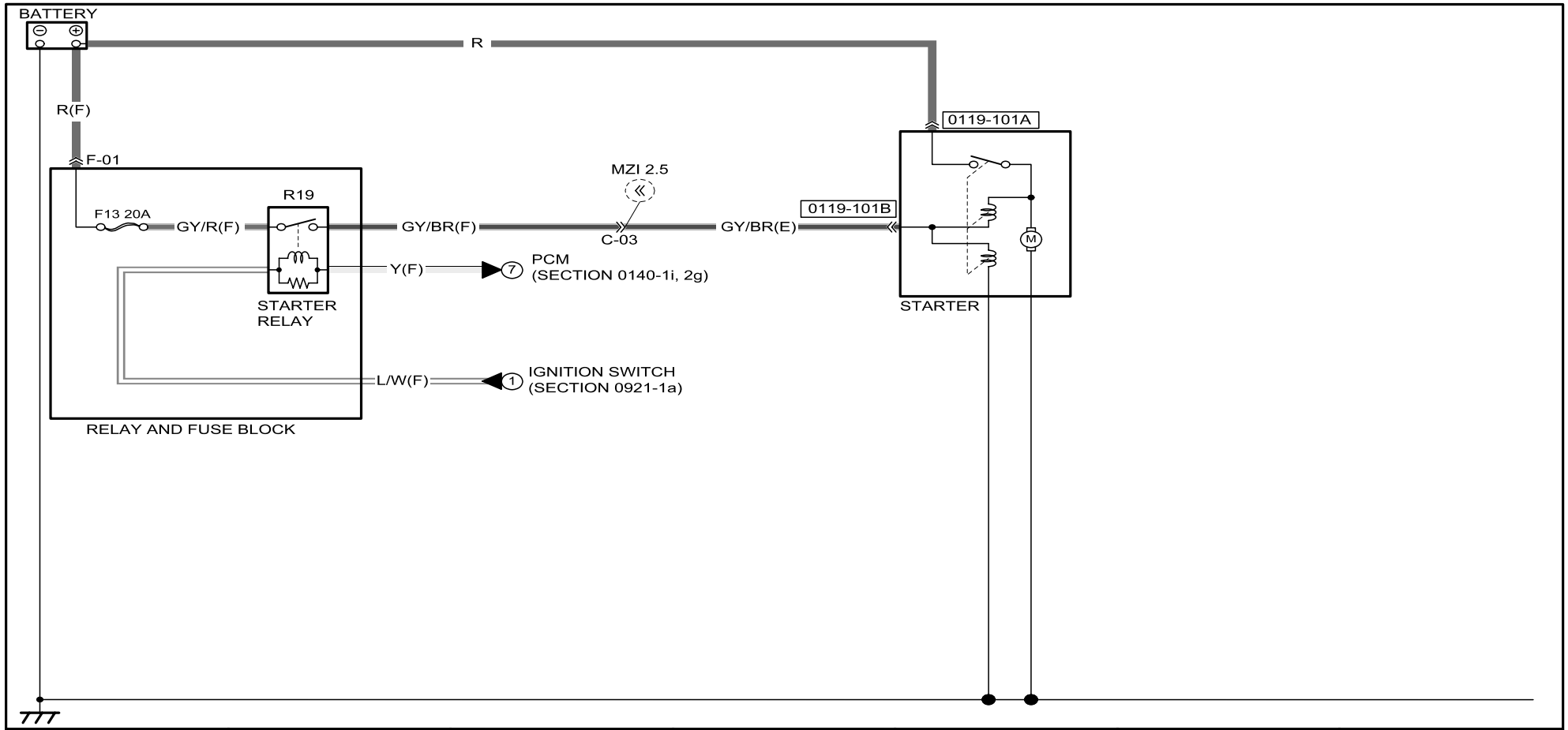

0119-101A STARTER	0119-101B STARTER					
R	GY/BR					

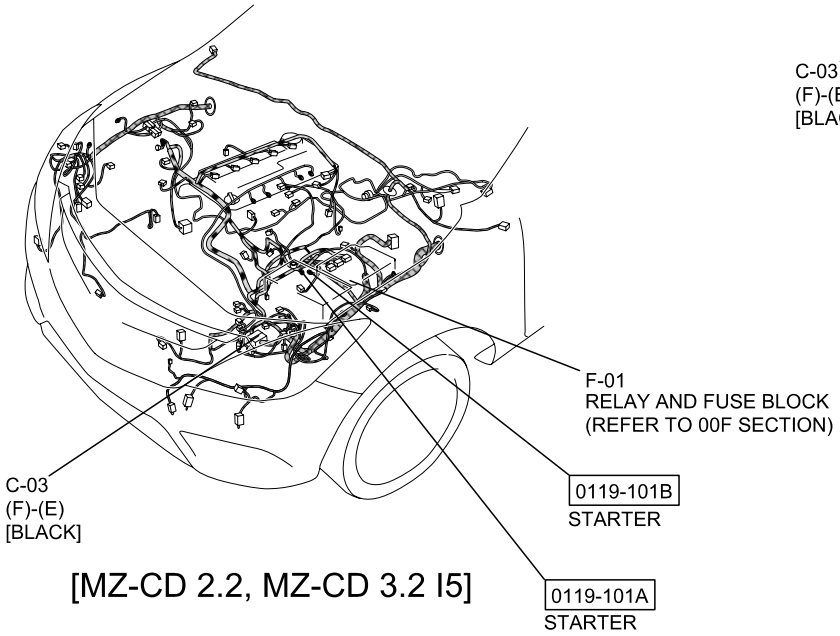

[MZ-CD 2.2, MZ-CD 3.2 I5]

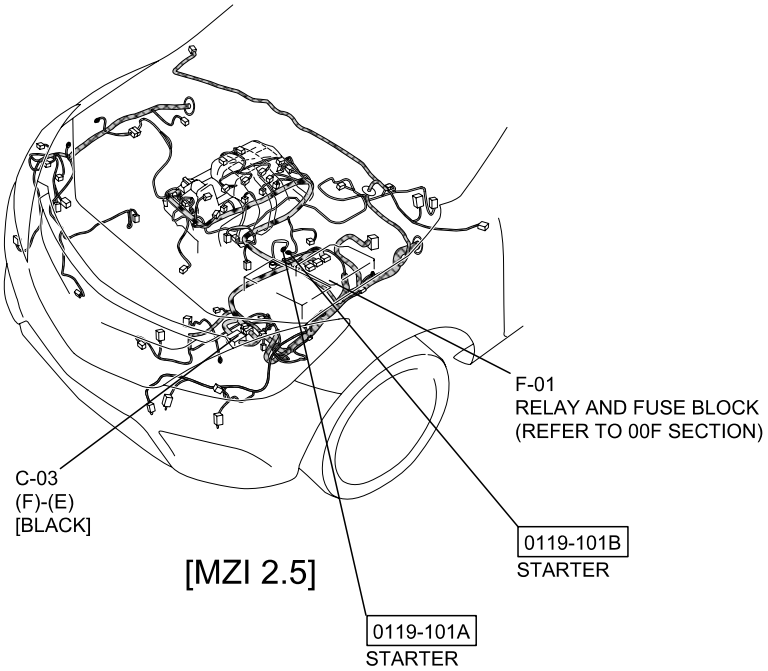

[MZI 2.5]

: FRONT HARNESS
: ENGINE HARNESS

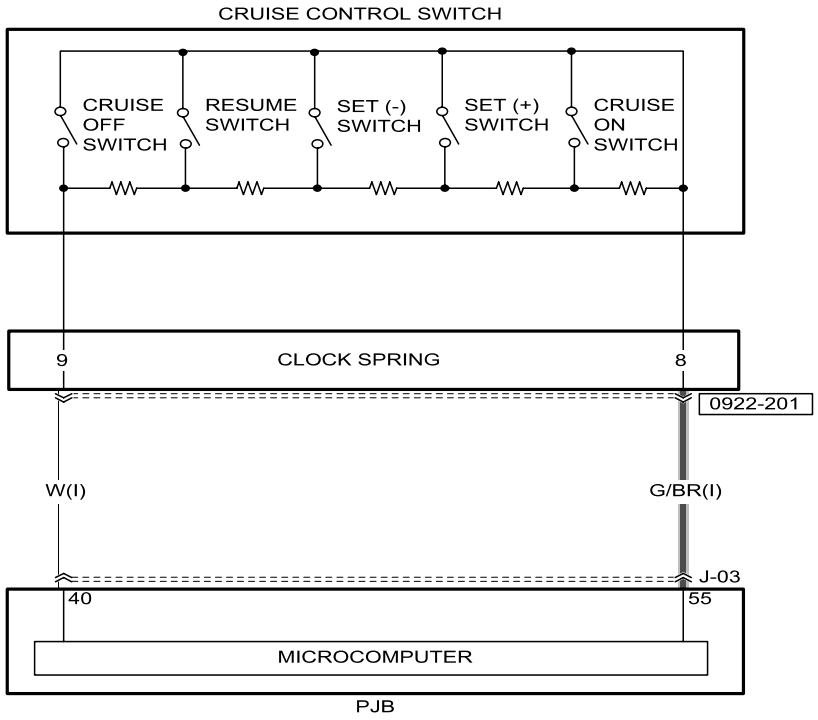

0922-201
INSTRUMENT PANEL HARNESS-CLOCK SPRING

INSTRUMENT PANEL HARNESS

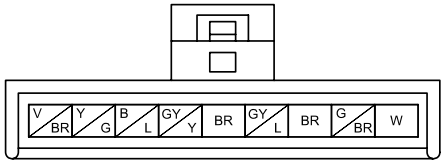

CLOCK SPRING

9	8	7	6	5	4	3	2	1

WIRE COLORS ARE INDICATED BY NUMBERS.

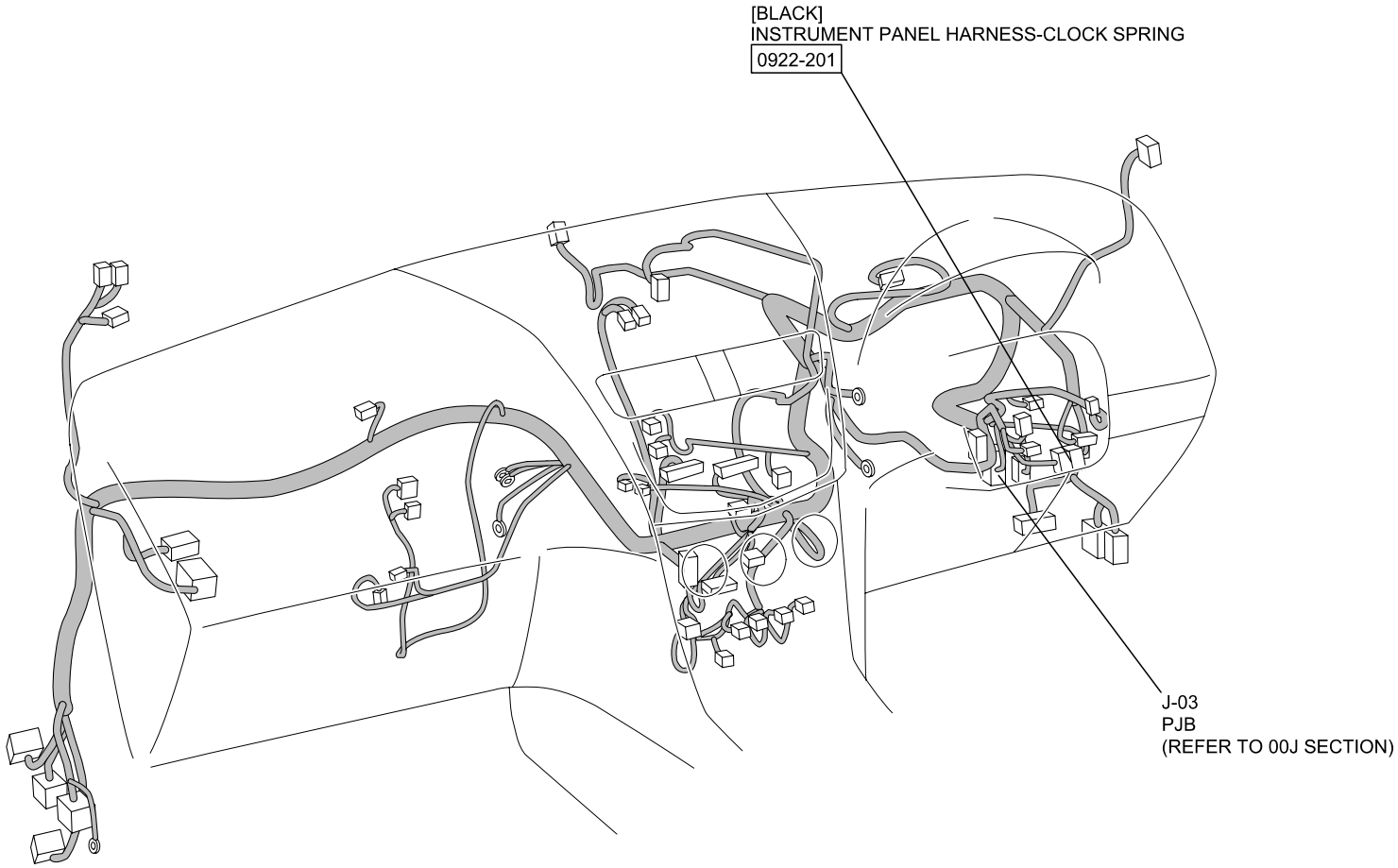

: INSTRUMENT PANEL HARNESS

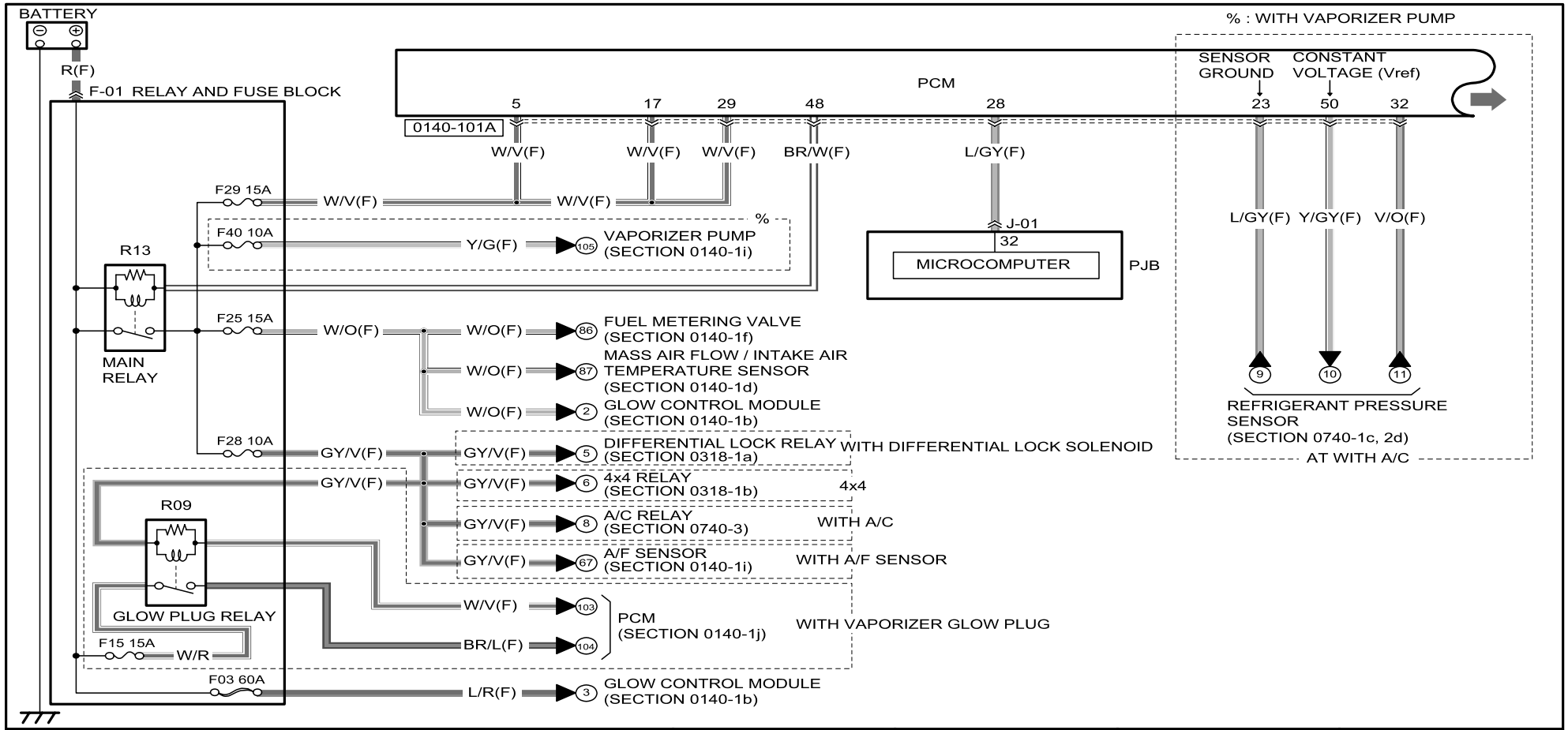

0140-101A
PCM

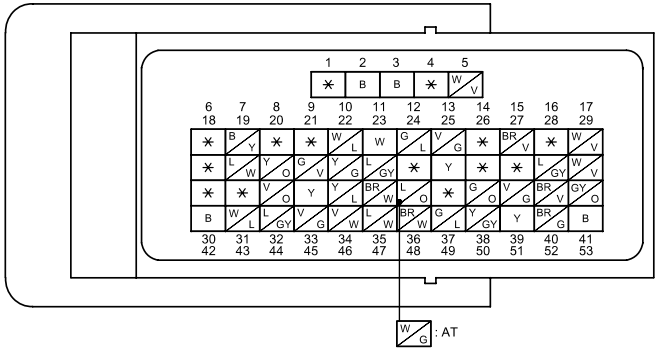

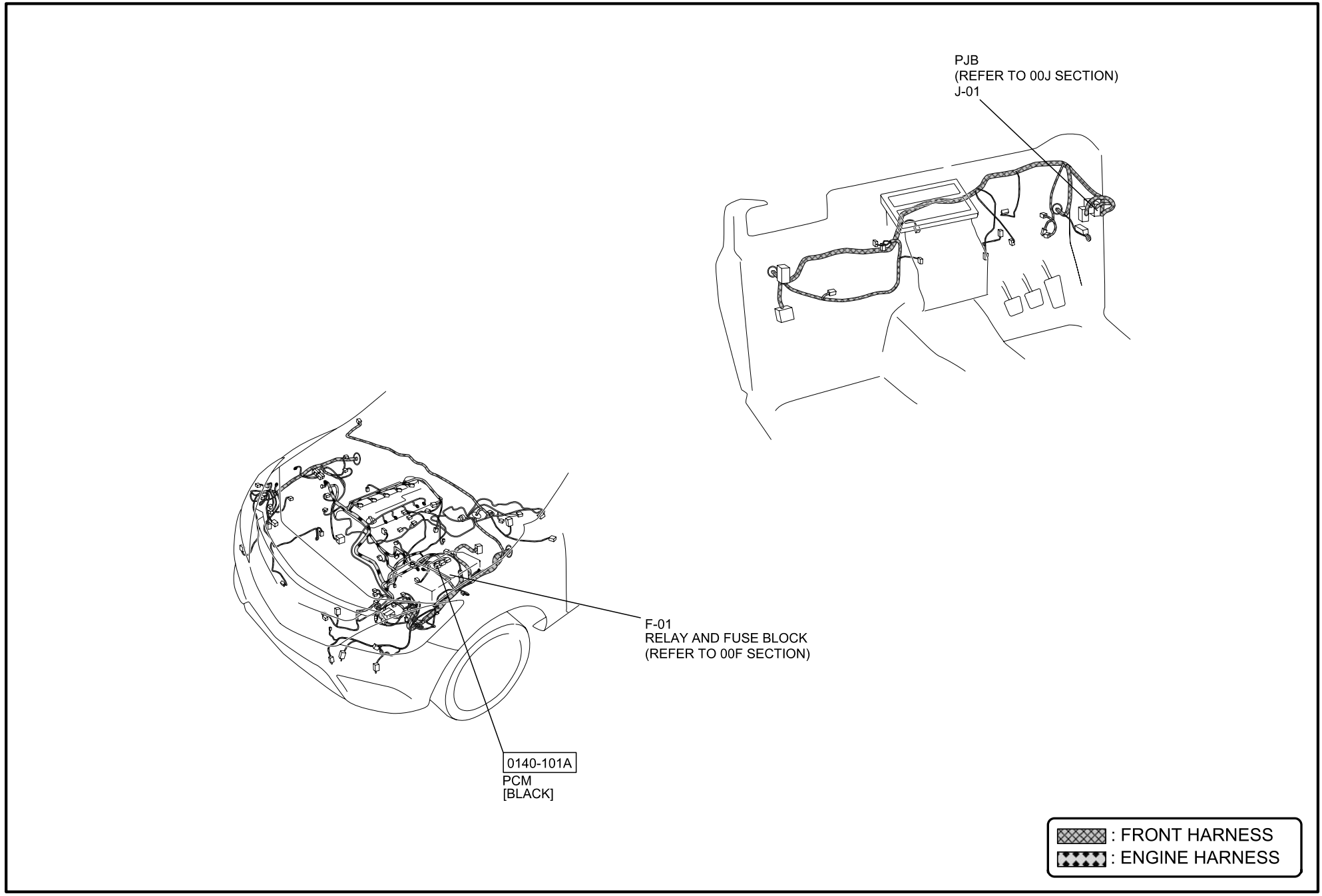
PJB
(REFER TO 00J SECTION)
J-01
F-01
RELAY AND FUSE BLOCK
(REFER TO 00F SECTION)
0140-101A
PCM
[BLACK]
: FRONT HARNESS
: ENGINE HARNESS

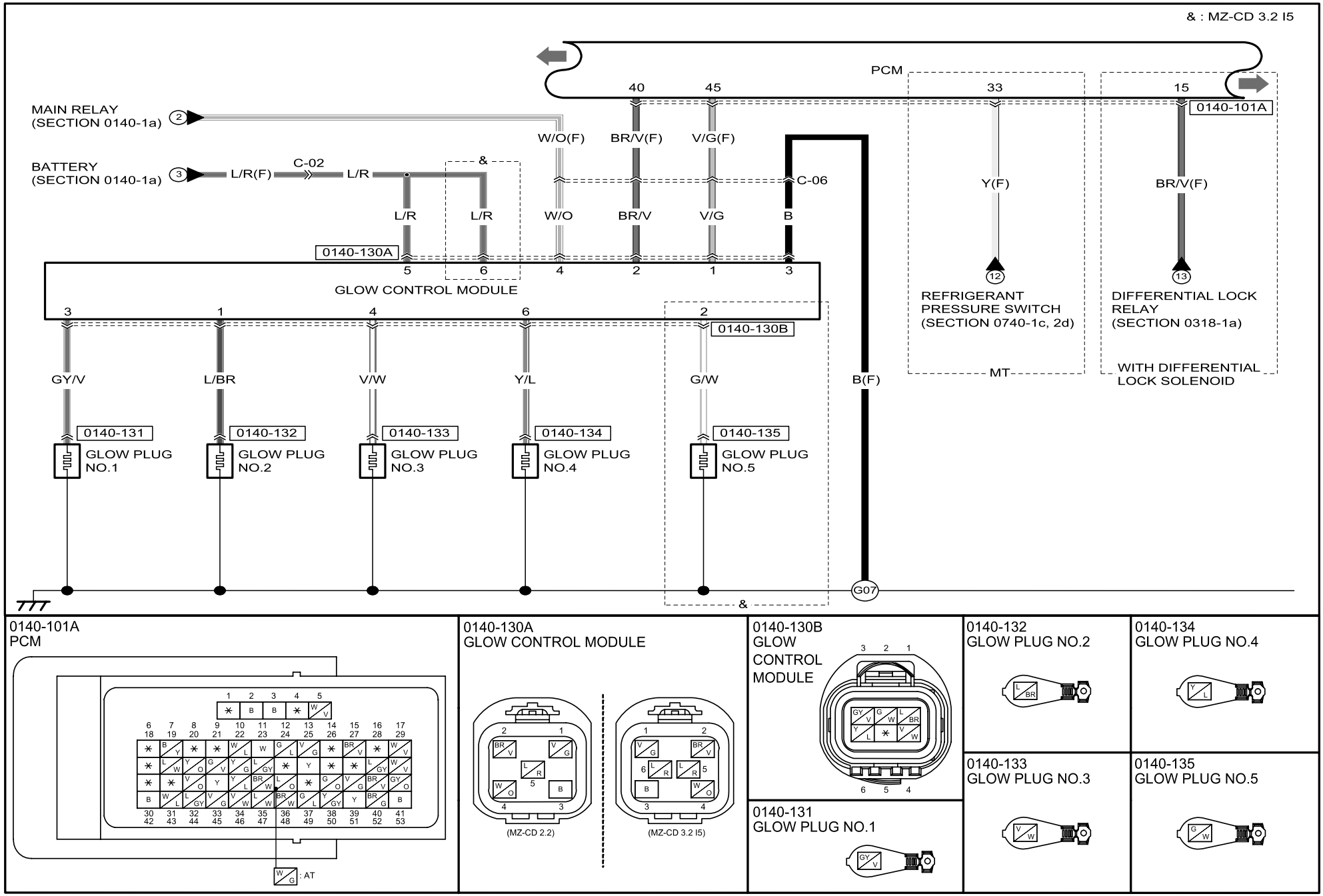
& : MZ-CD 3.2 I5
PCM
40
45
33
15
0140-101A
MAIN RELAY
(SECTION 0140-1a)
2
W/O(F)
BR/V(F)
V/G(F)
BATTERY
(SECTION 0140-1a)
3
L/R(F)
C-02
L/R
&
C-06
Y(F)
BR/V(F)
L/R
L/R
W/O
BR/V
V/G
B
0140-130A
5
6
4
2
1
3
GLOW CONTROL MODULE
12
13
REFRIGERANT
PRESSURE SWITCH
(SECTION 0740-1c, 2d)
DIFFERENTIAL LOCK
RELAY
(SECTION 0318-1a)
3
1
4
6
2
0140-130B
MT
WITH DIFFERENTIAL
LOCK SOLENOID
GY/V
L/BR
V/W
Y/L
G/W
B(F)
0140-131
0140-132
0140-133
0140-134
0140-135
GLOW PLUG
NO.1
GLOW PLUG
NO.2
GLOW PLUG
NO.3
GLOW PLUG
NO.4
GLOW PLUG
NO.5
G07
&
0140-101A
PCM
: AT
0140-130A
GLOW CONTROL MODULE
(MZ-CD 2.2)
(MZ-CD 3.2 I5)
0140-130B
GLOW
CONTROL
MODULE
0140-132
GLOW PLUG NO.2
0140-134
GLOW PLUG NO.4
0140-133
GLOW PLUG NO.3
0140-135
GLOW PLUG NO.5
0140-131
GLOW PLUG NO.1

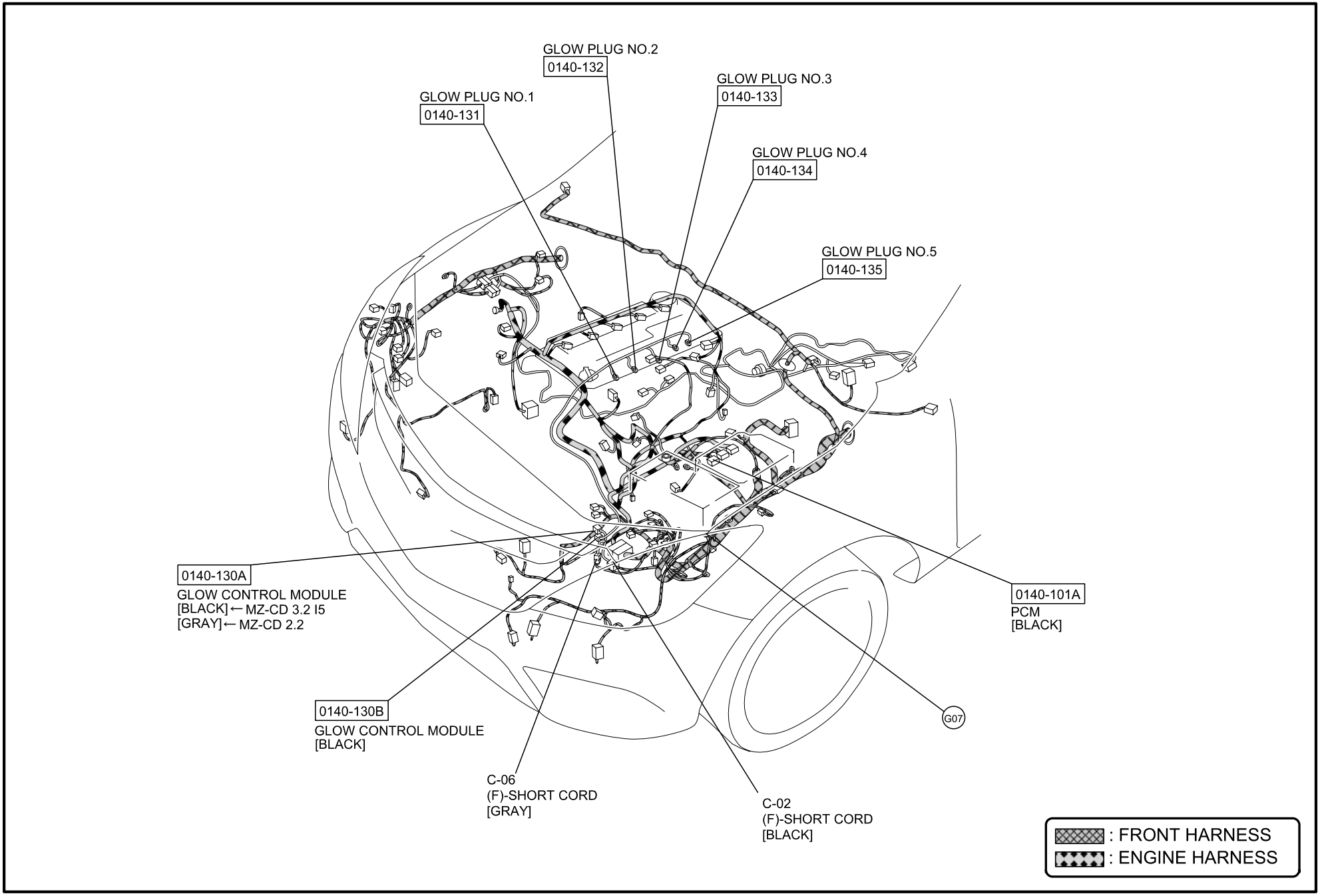
GLOW PLUG NO.2
0140-132
GLOW PLUG NO.3
0140-133
GLOW PLUG NO.1
0140-131
GLOW PLUG NO.4
0140-134
GLOW PLUG NO.5
0140-135
0140-130A
GLOW CONTROL MODULE
[BLACK]← MZ-CD 3.2 I5
[GRAY]← MZ-CD 2.2
0140-101A
PCM
[BLACK]
0140-130B
GLOW CONTROL MODULE
[BLACK]
G07
C-06
(F)-SHORT CORD
[GRAY]
C-02
(F)-SHORT CORD
[BLACK]
: FRONT HARNESS
: ENGINE HARNESS

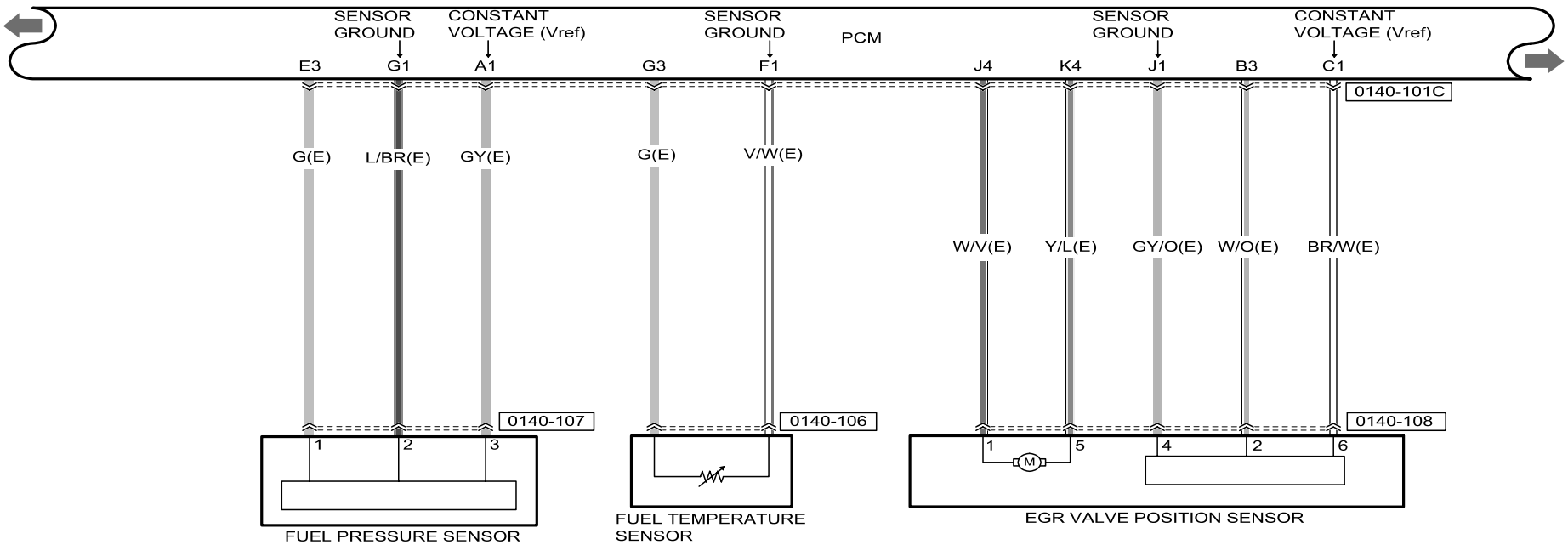

0140-101C
PCM

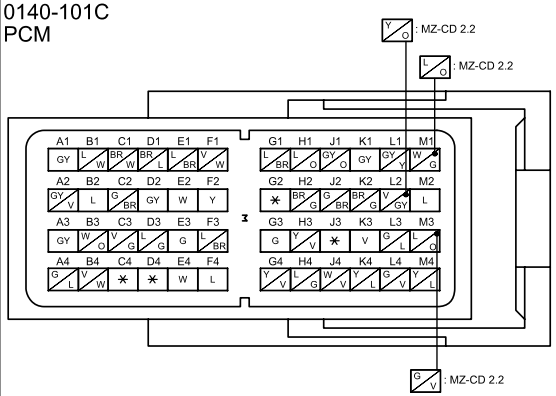

0140-106
FUEL TEMPERATURE SENSOR

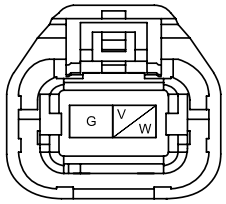

0140-107
FUEL PRESSURE SENSOR

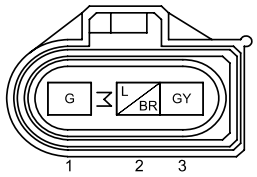

0140-108
EGR VALVE POSITION SENSOR

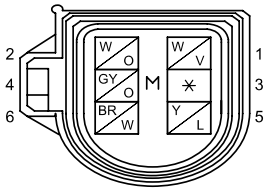

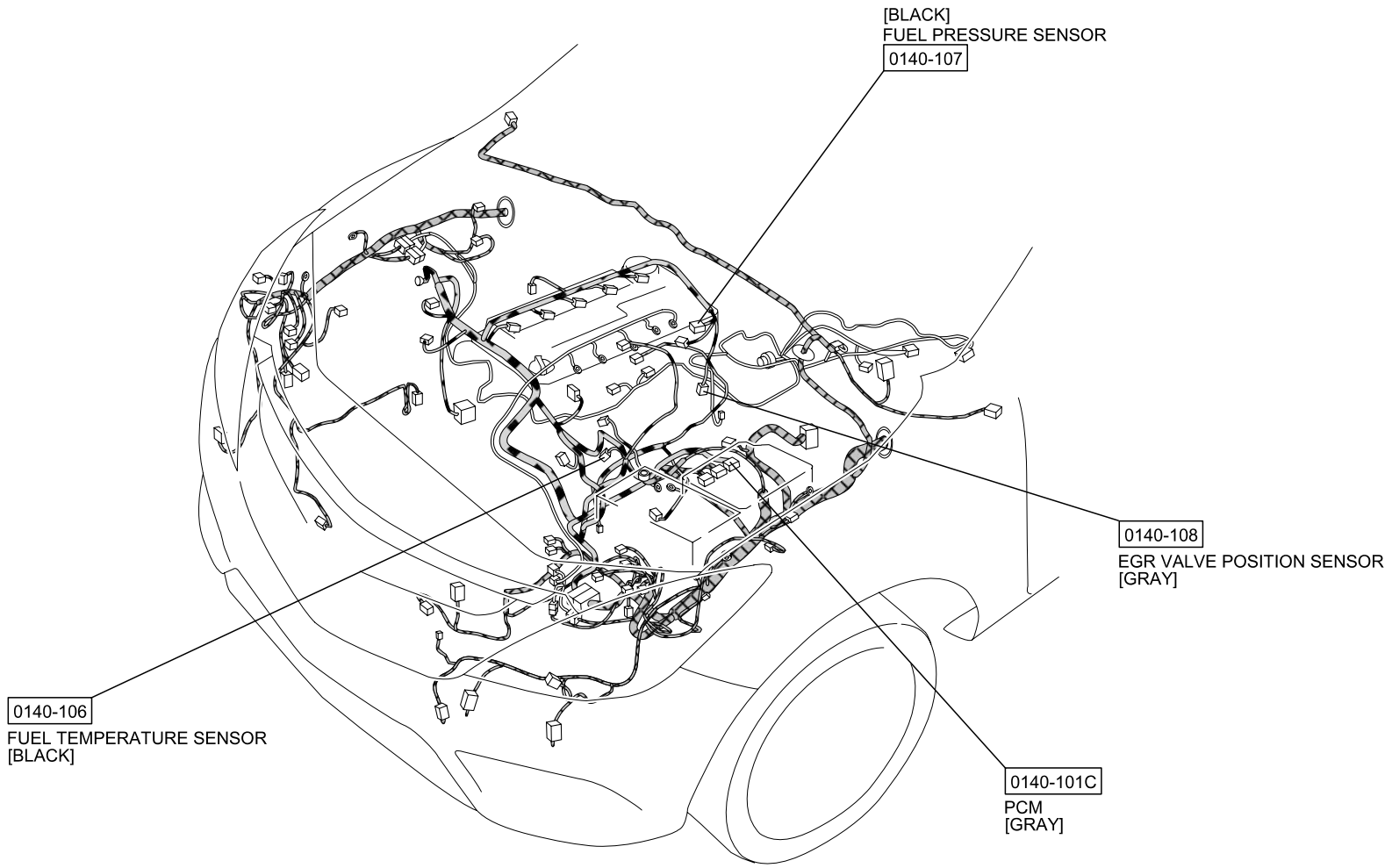

: FRONT HARNESS
: ENGINE HARNESS

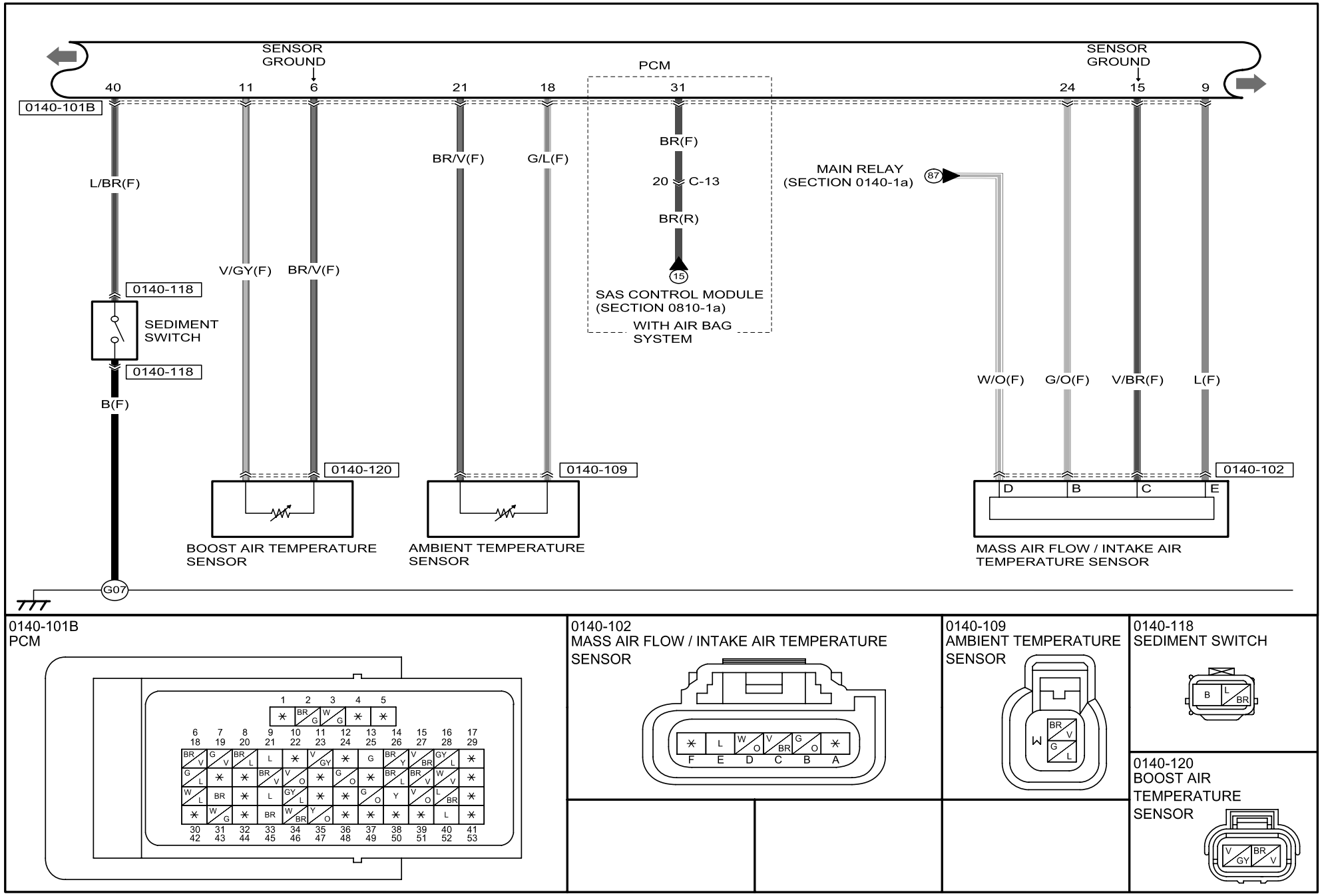
SENSOR GROUND
PCM
SENSOR GROUND
40
11
6
21
18
31
24
15
9
0140-101B
L/BR(F)
V/GY(F)
BR/V(F)
BR/V(F)
G/L(F)
BR(F)
20
C-13
BR(R)
15
SAS CONTROL MODULE (SECTION 0810-1a)
WITH AIR BAG SYSTEM
MAIN RELAY (SECTION 0140-1a)
87
0140-118
SEDIMENT SWITCH
0140-118
B(F)
W/O(F)
G/O(F)
V/BR(F)
L(F)
0140-120
0140-109
0140-102
D
B
C
E
BOOST AIR TEMPERATURE SENSOR
AMBIENT TEMPERATURE SENSOR
MASS AIR FLOW / INTAKE AIR TEMPERATURE SENSOR
G07
0140-101B
PCM
0140-102
MASS AIR FLOW / INTAKE AIR TEMPERATURE SENSOR
0140-109
AMBIENT TEMPERATURE SENSOR
0140-118
SEDIMENT SWITCH
0140-120
BOOST AIR TEMPERATURE SENSOR

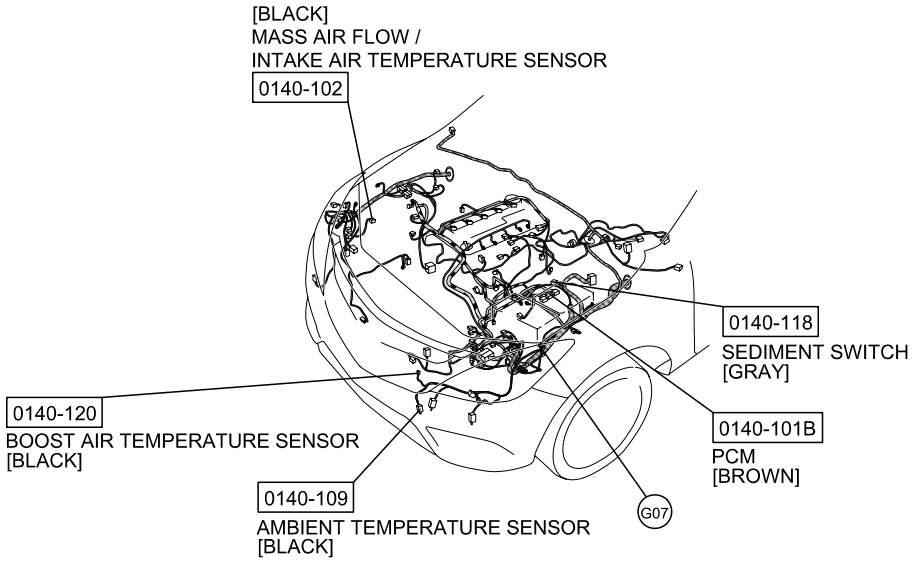

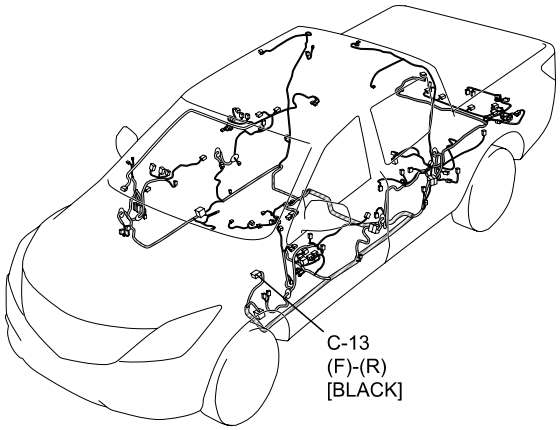

[DOUBLE CAB]

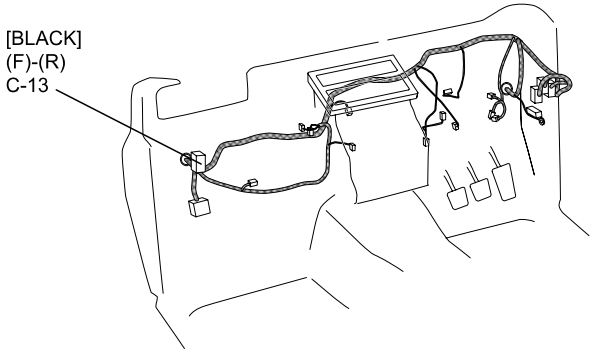

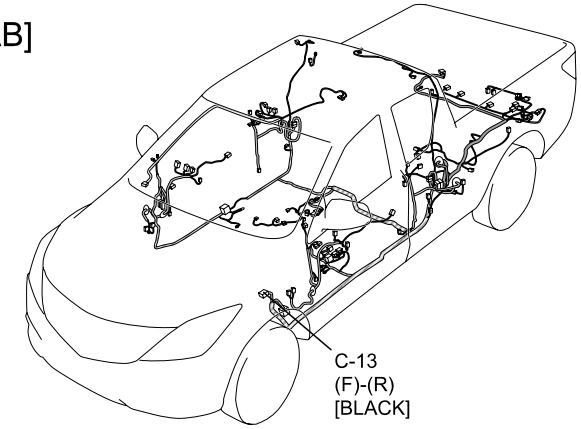

[FREESTYLE CAB]

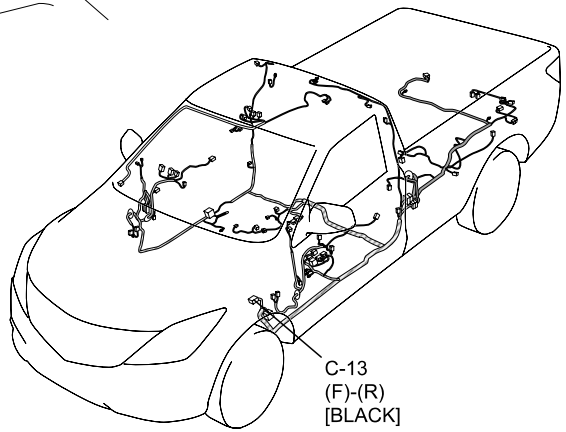

[REGULAR CAB]

: FRONT HARNESS
: ENGINE HARNESS
: REAR HARNESS
: REAR NO.2 HARNESS
REAR NO.3 HARNESS
: DOOR HARNESS
: INTERIOR LIGHT HARNESS

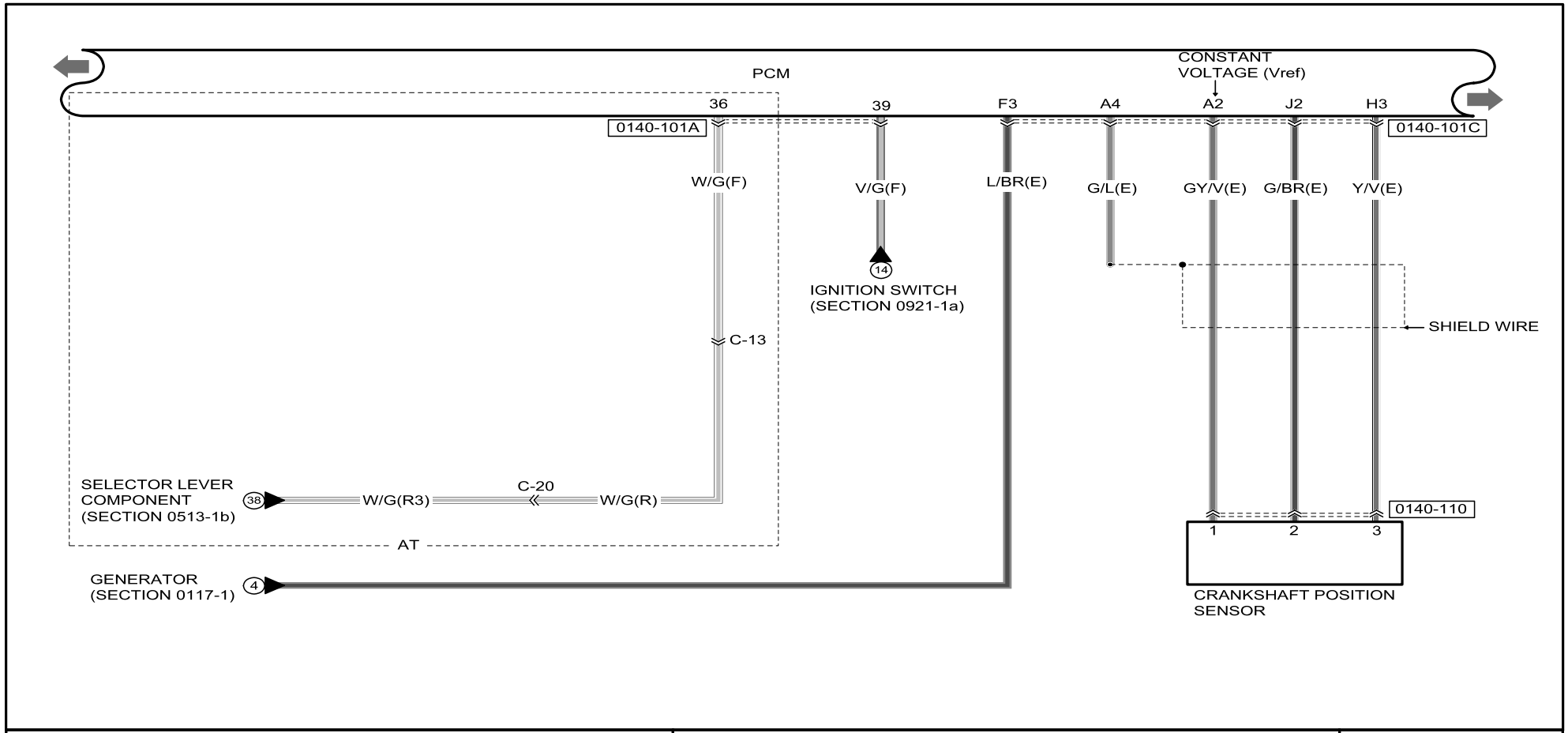

0140-101A
PCM

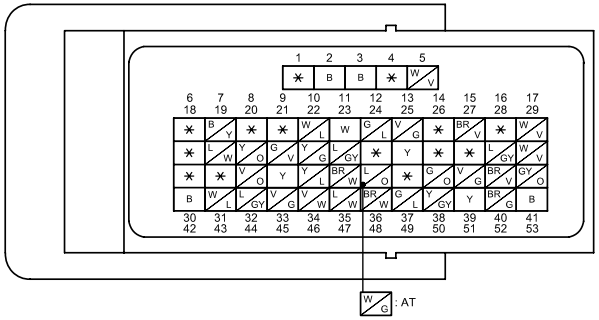

0140-101C
PCM

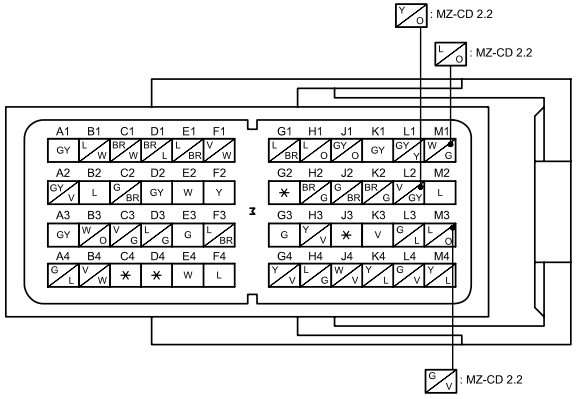

0140-110
CRANKSHAFT POSITION SENSOR

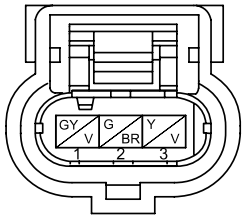

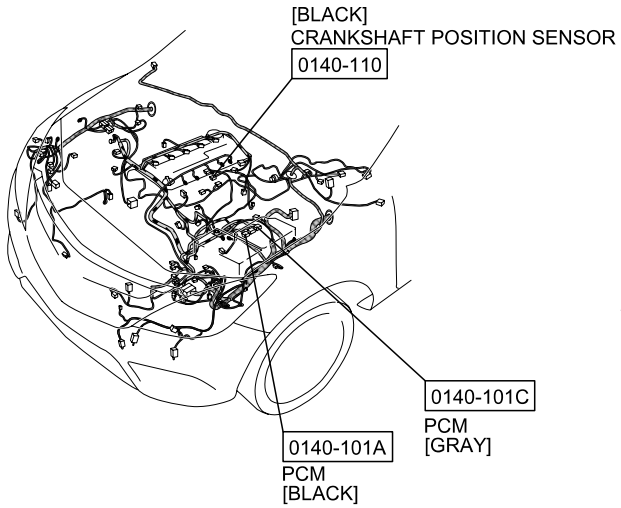

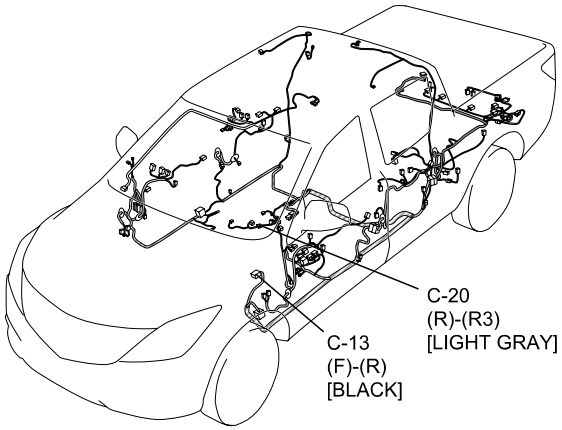

[DOUBLE CAB]

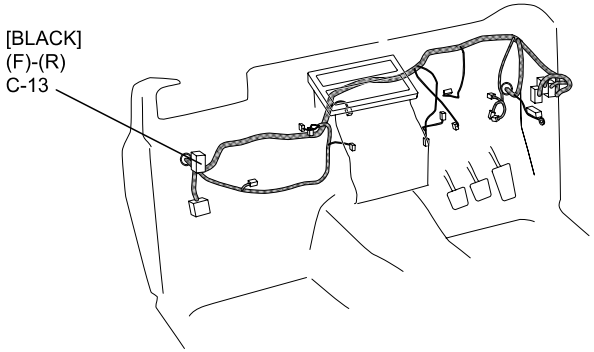

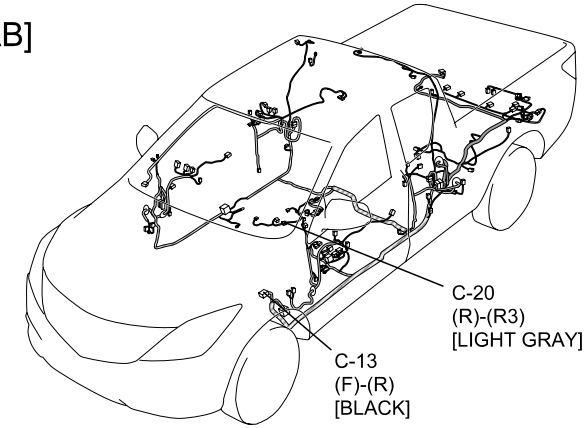

[FREESTYLE CAB]

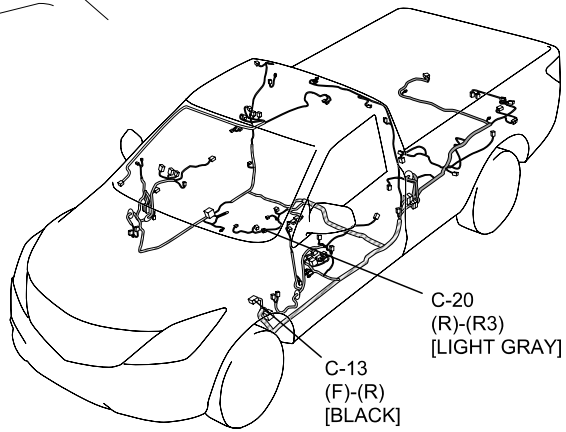

[REGULAR CAB]

: FRONT HARNESS
: ENGINE HARNESS
: REAR HARNESS
: REAR NO.2 HARNESS
REAR NO.3 HARNESS
: DOOR HARNESS
: INTERIOR LIGHT HARNESS

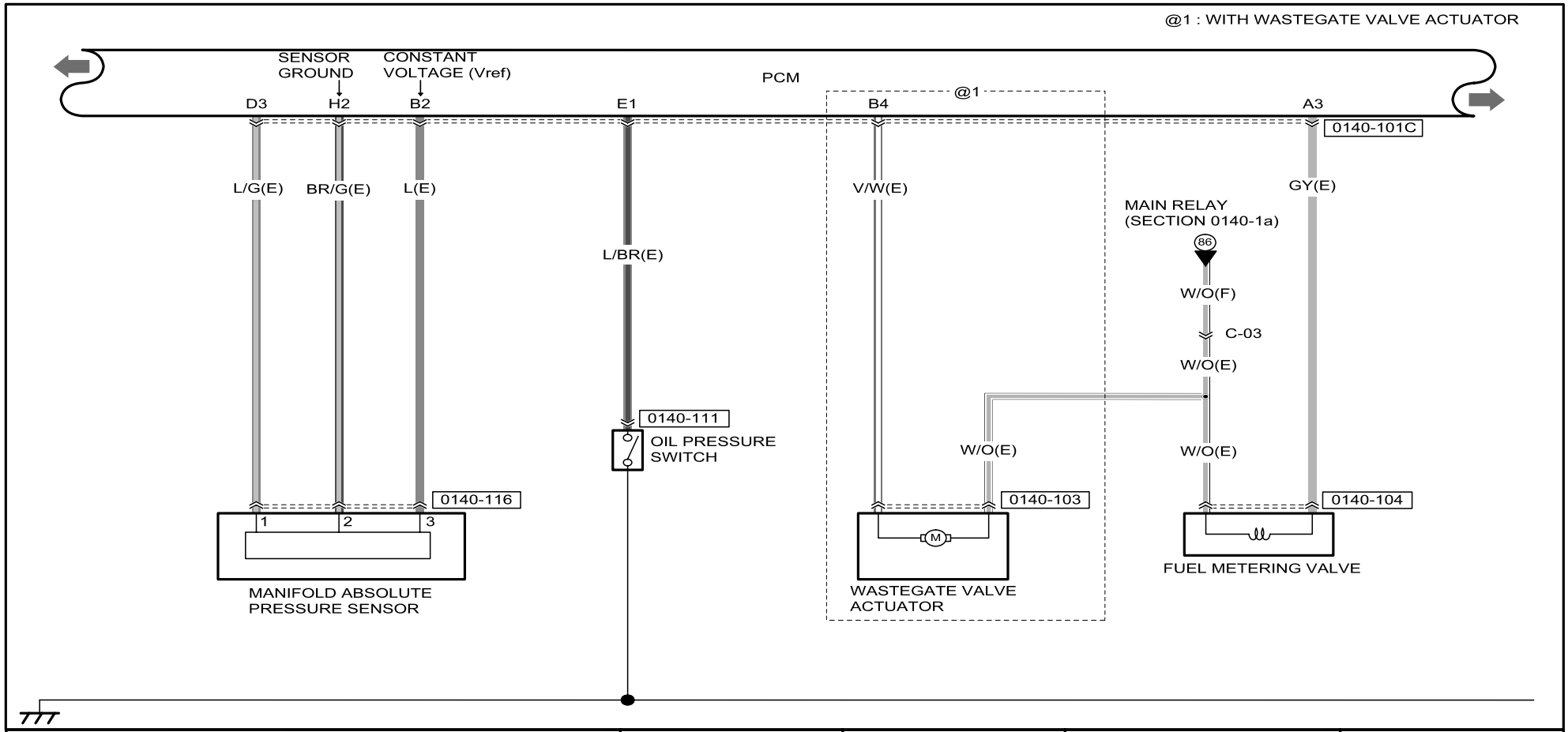

0140-101C
PCM

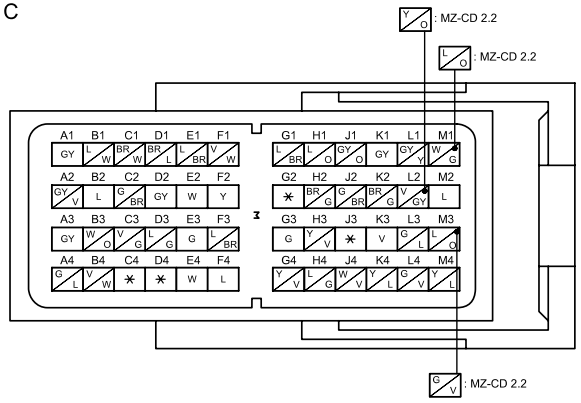

0140-103
WASTEGATE VALVE ACTUATOR

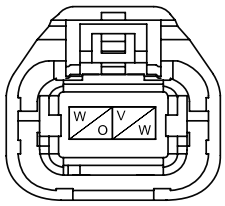

0140-104
FUEL METERING VALVE

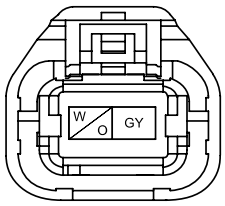

0140-111
OIL PRESSURE SWITCH

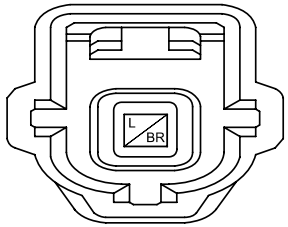

0140-116
MANIFOLD ABSOLUTE PRESSURE SENSOR

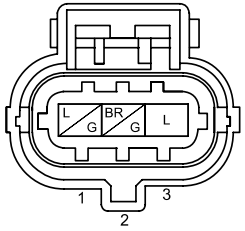

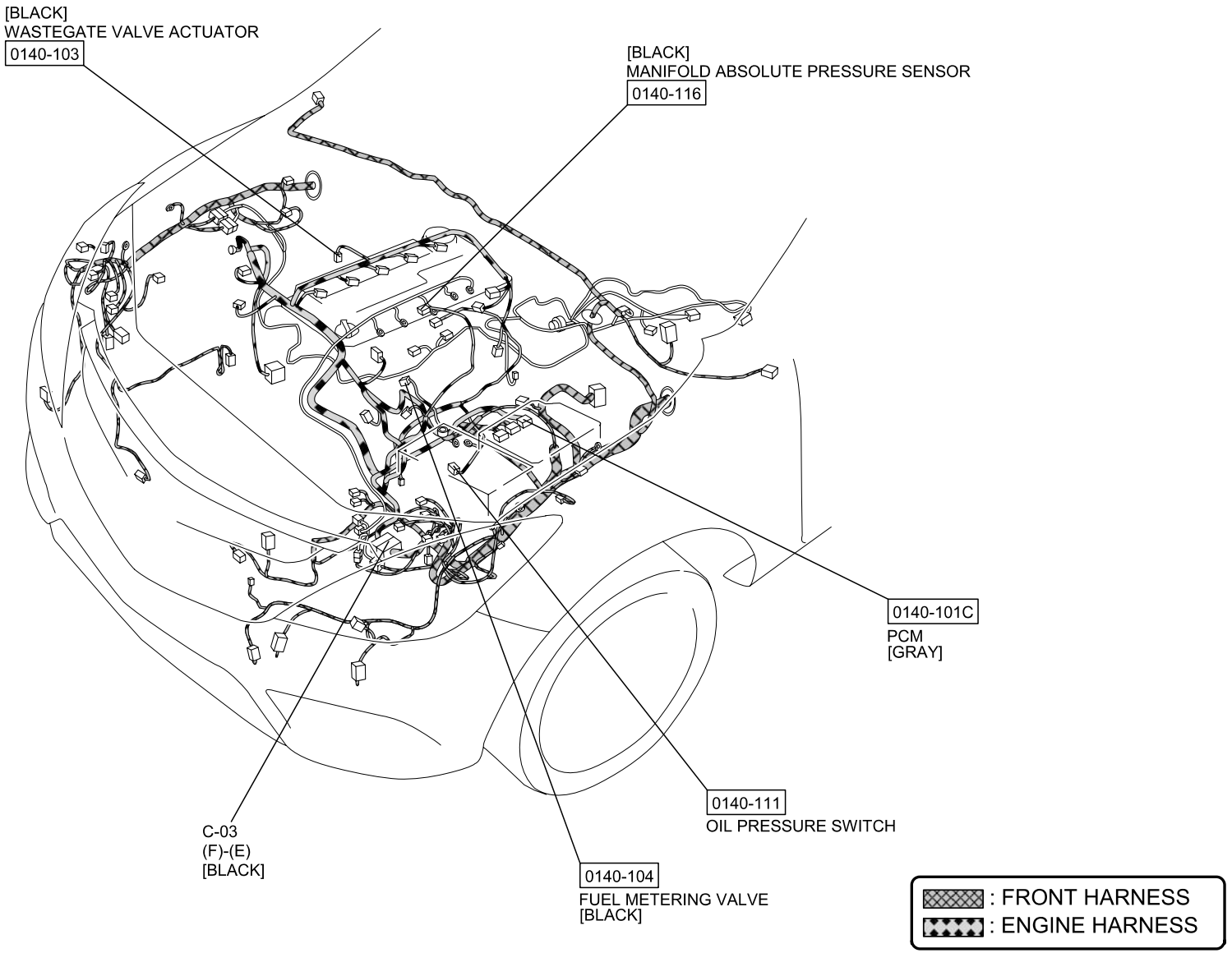
[BLACK]
WASTEGATE VALVE ACTUATOR
0140-103
[BLACK]
MANIFOLD ABSOLUTE PRESSURE SENSOR
0140-116
0140-101C
PCM
[GRAY]
0140-111
OIL PRESSURE SWITCH
C-03
(F)-(E)
[BLACK]
0140-104
FUEL METERING VALVE
[BLACK]
: FRONT HARNESS
: ENGINE HARNESS

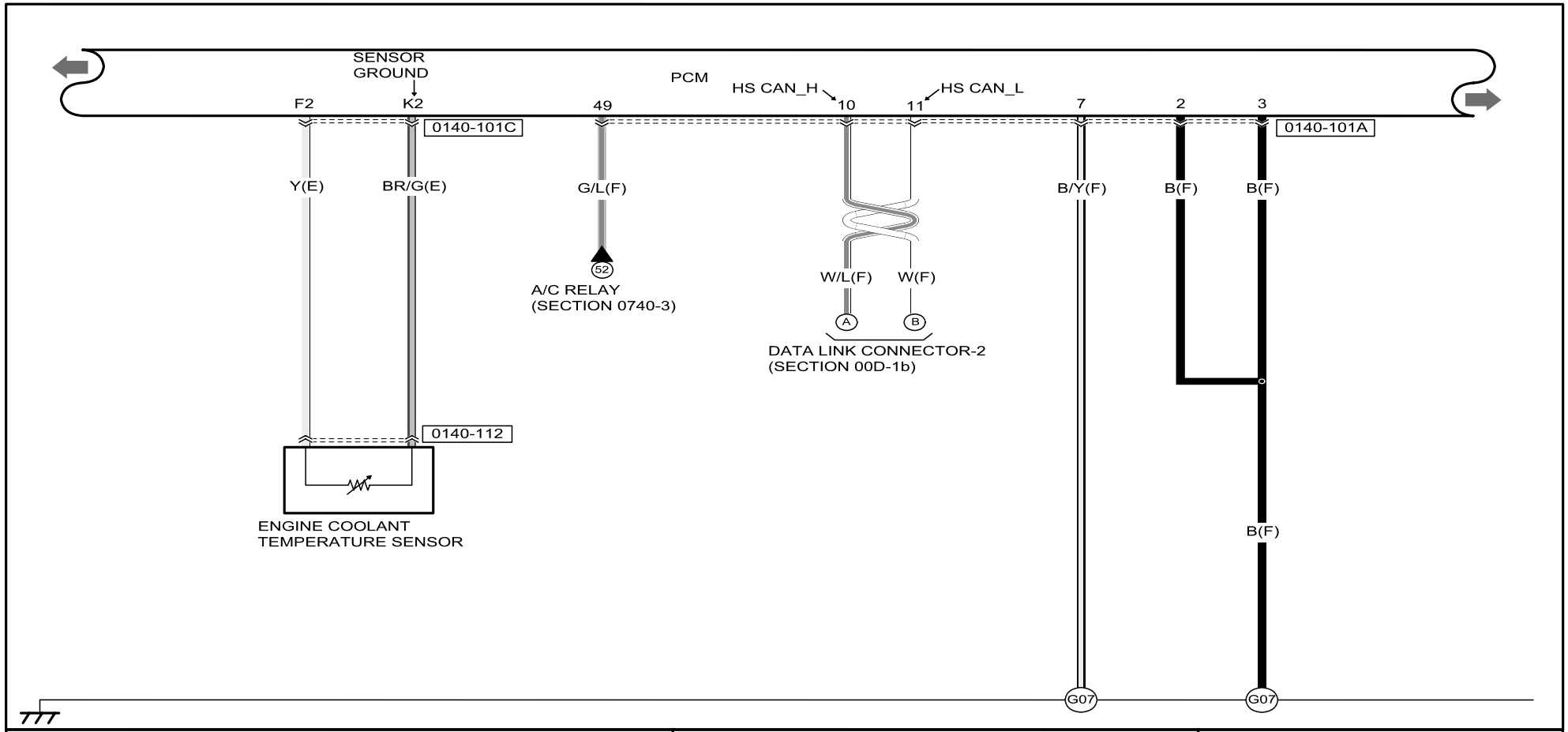

0140-101A
PCM

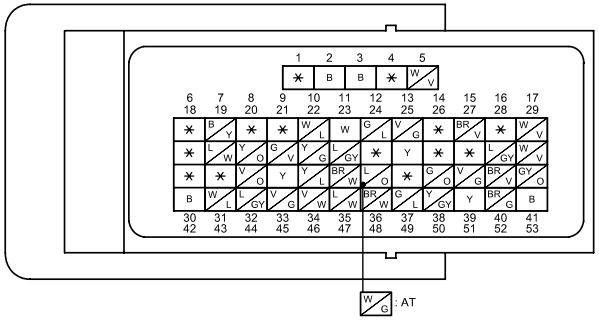

0140-101C
PCM

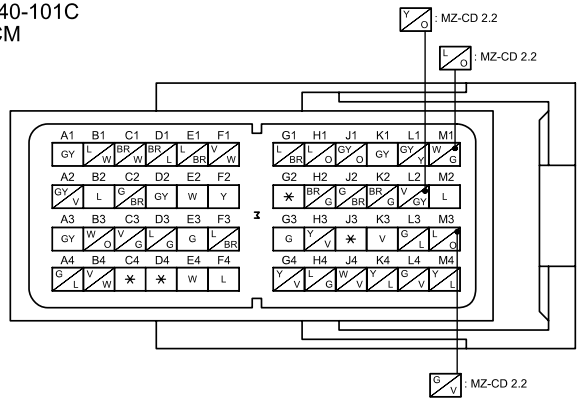

0140-112
ENGINE COOLANT TEMPERATURE SENSOR

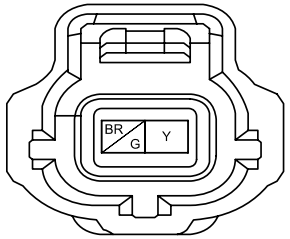

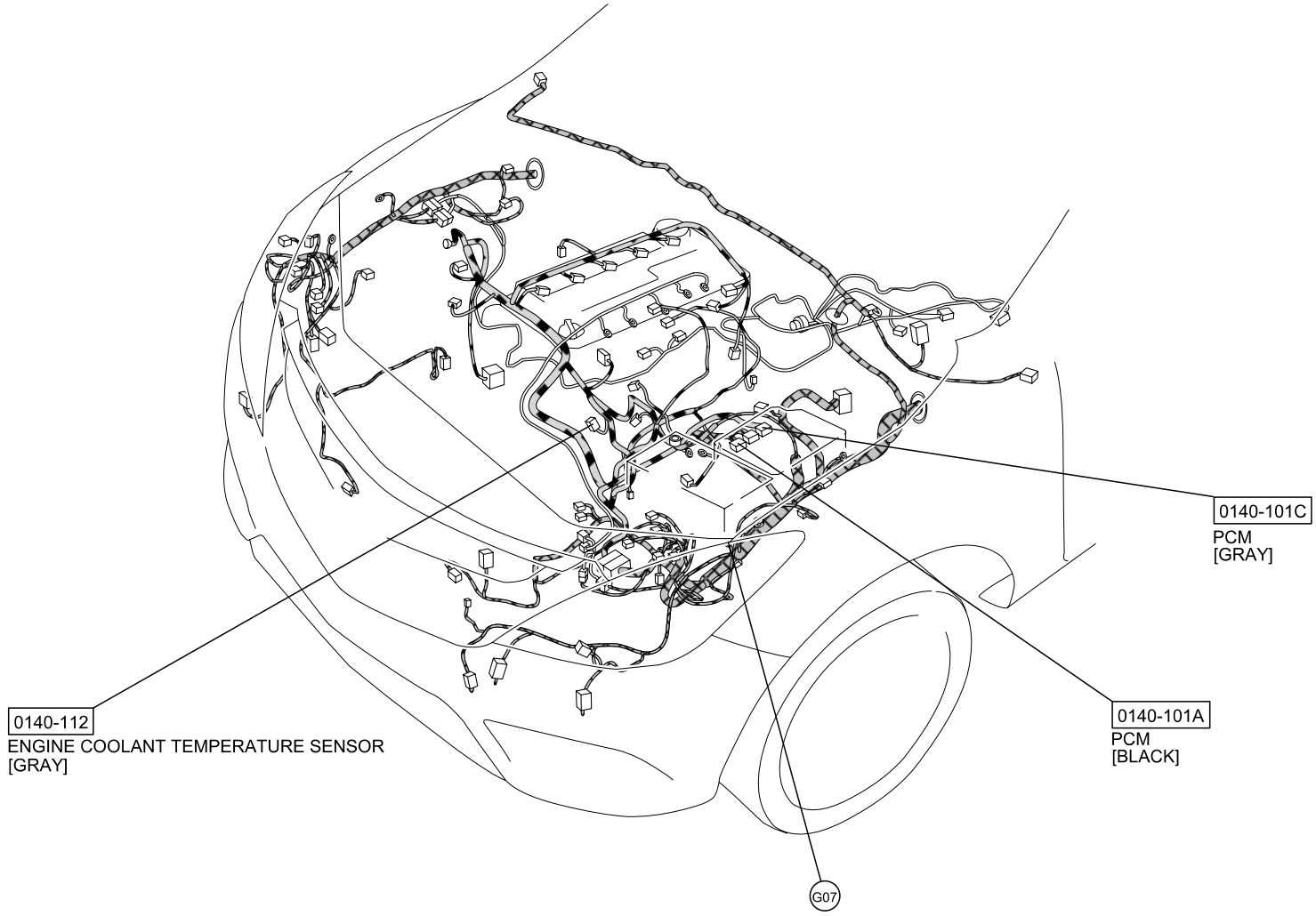

: FRONT HARNESS
: ENGINE HARNESS

#1 : WITH GUIDE BLADE ACTUATOR POSITION SENSOR @2 : WITH WASTEGATE VALVE ACTUATOR POSITION SENSOR

SENSOR GROUND
CONSTANT VOLTAGE (Vref)
PCM
CONSTANT VOLTAGE (Vref)
SENSOR GROUND

E4 F4 K1 E2 38 43 52 8 37 30

0140-101C
0140-101B

W(E) L(E) GY(E) W(E)

Y(F)
C-03
Y(E)
Y(E)

W/G(F)
16
DIFFERENTIAL LOCK SWITCH (SECTION 0318-1b)
WITH DIFFERENTIAL LOCK SWITCH

Y(E)
17
WASTEGATE VALVE ACTUATOR POSITION SENSOR (SECTION 0140-1n)
@2

L(F)
L(F) L(F)
4 C-04 2 C-05
WITHOUT ABS / DSC L L WITH ABS / DSC
L
18
BACK-UP LIGHT SWITCH (SECTION 0918-6)
MT

BR/L(F) G/O(F) W/L(F)

0140-113
1 2 3 4 5
M
GUIDE BLADE ACTUATOR POSITION SENSOR
#1

0140-142
3 2 1
DIESEL PARTICULATE FILTER DIFFERENTIAL PRESSURE SENSOR
WITH DIESEL PARTICULATE FILTER DIFFERENTIAL PRESSURE SENSOR

0140-101B
PCM

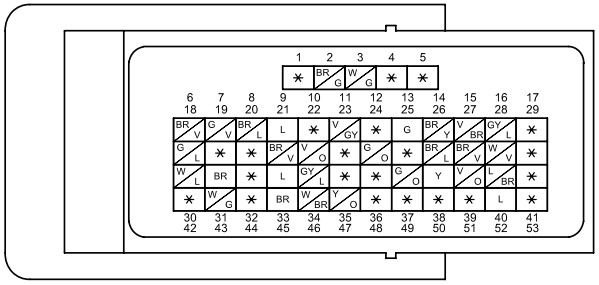

0140-101C
PCM

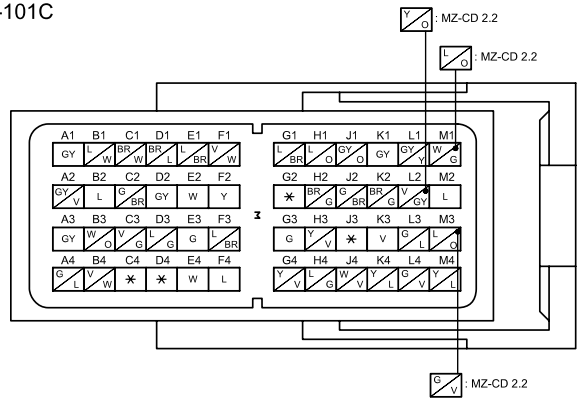

0140-113
GUIDE BLADE ACTUATOR POSITION SENSOR

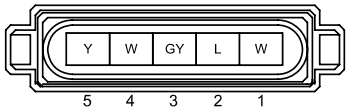

0140-142
DIESEL PARTICULATE FILTER DIFFERENTIAL PRESSURE SENSOR

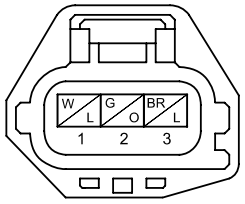

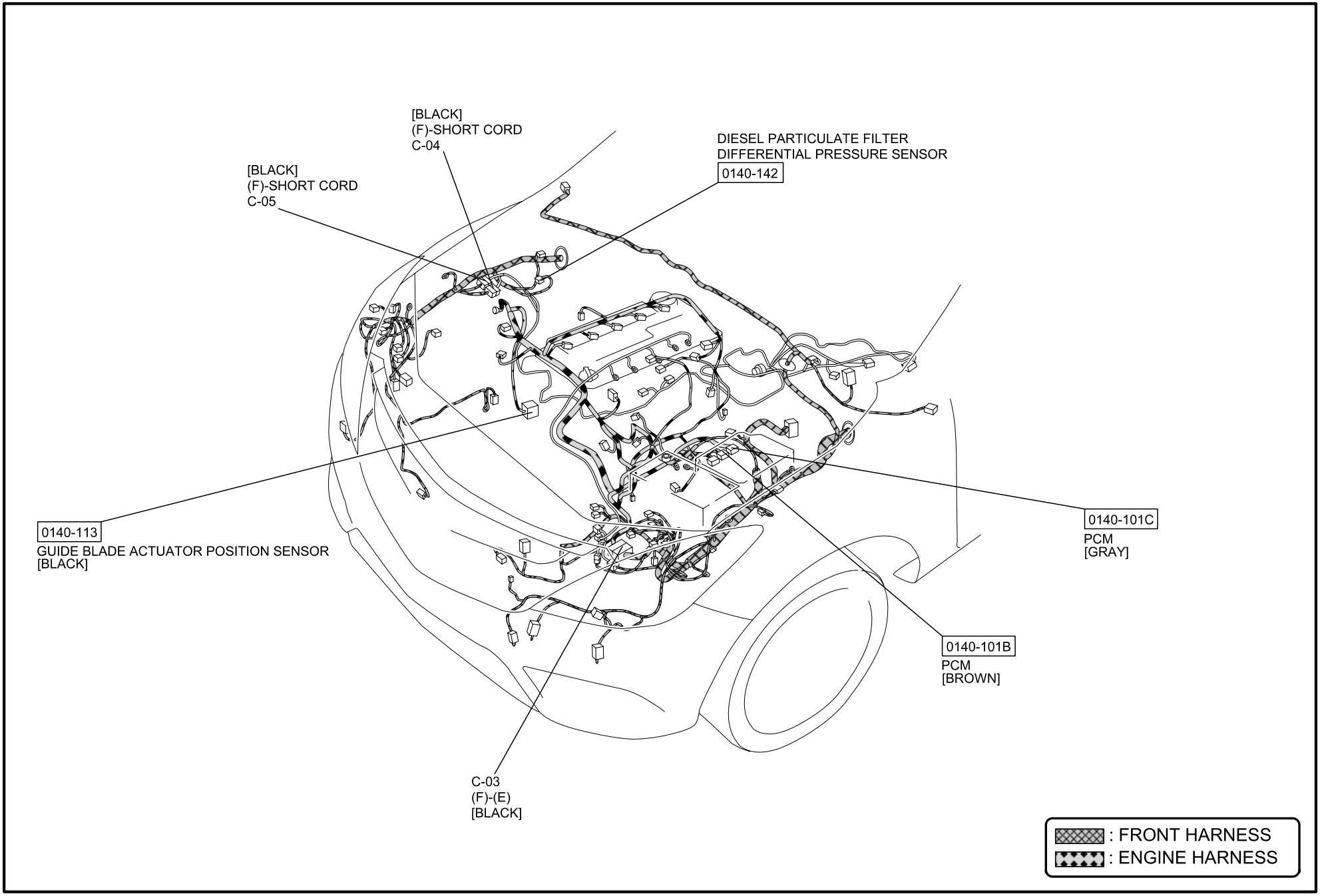
[BLACK]
(F)-SHORT CORD
C-04
[BLACK]
(F)-SHORT CORD
C-05
DIESEL PARTICULATE FILTER
DIFFERENTIAL PRESSURE SENSOR
0140-142
0140-113
GUIDE BLADE ACTUATOR POSITION SENSOR
[BLACK]
0140-101C
PCM
[GRAY]
0140-101B
PCM
[BROWN]
C-03
(F)-(E)
[BLACK]
: FRONT HARNESS
: ENGINE HARNESS

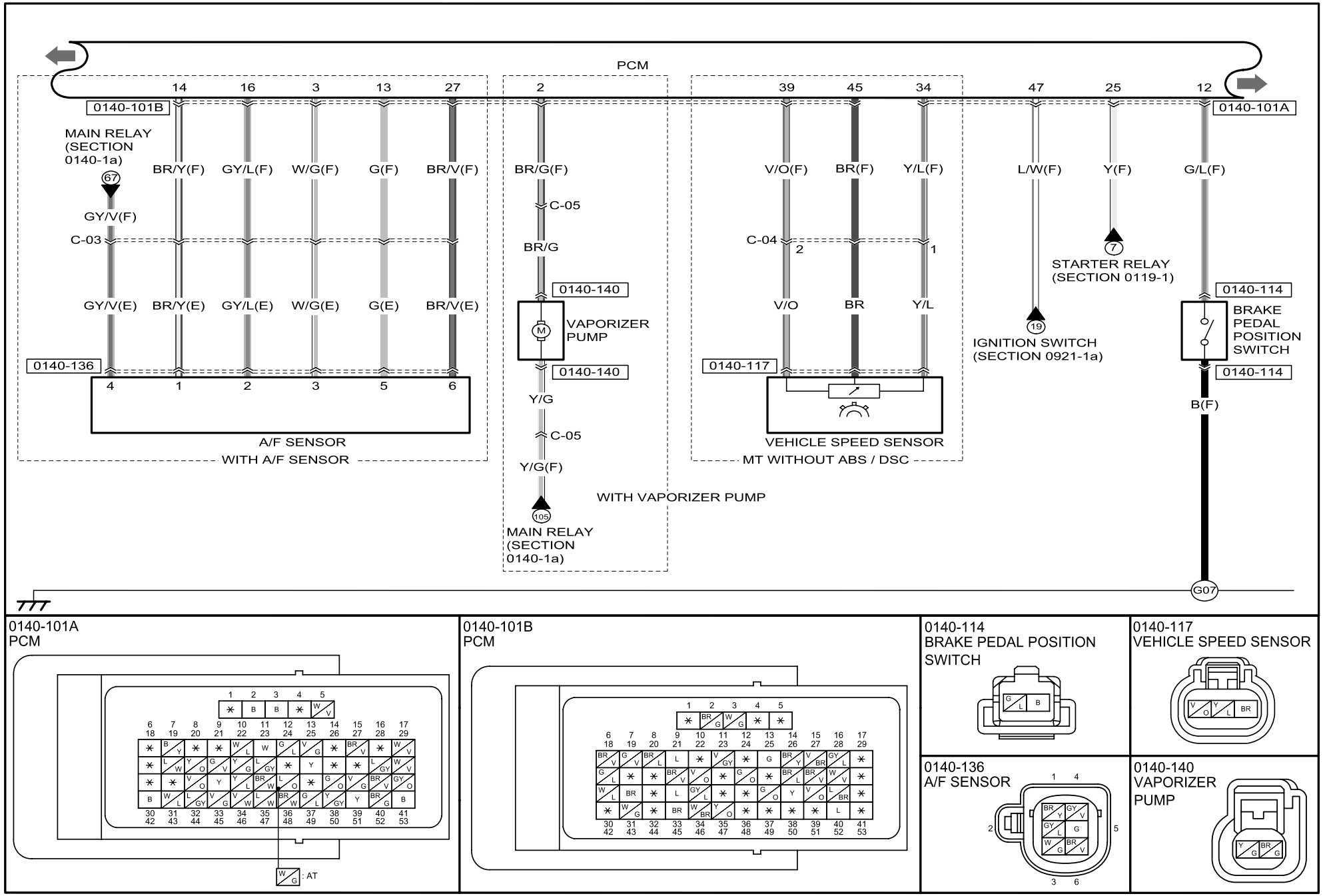

0140-101A
PCM

0140-101B
PCM

0140-114
BRAKE PEDAL POSITION SWITCH

0140-117
VEHICLE SPEED SENSOR

0140-136
A/F SENSOR

0140-140
VAPORIZER PUMP

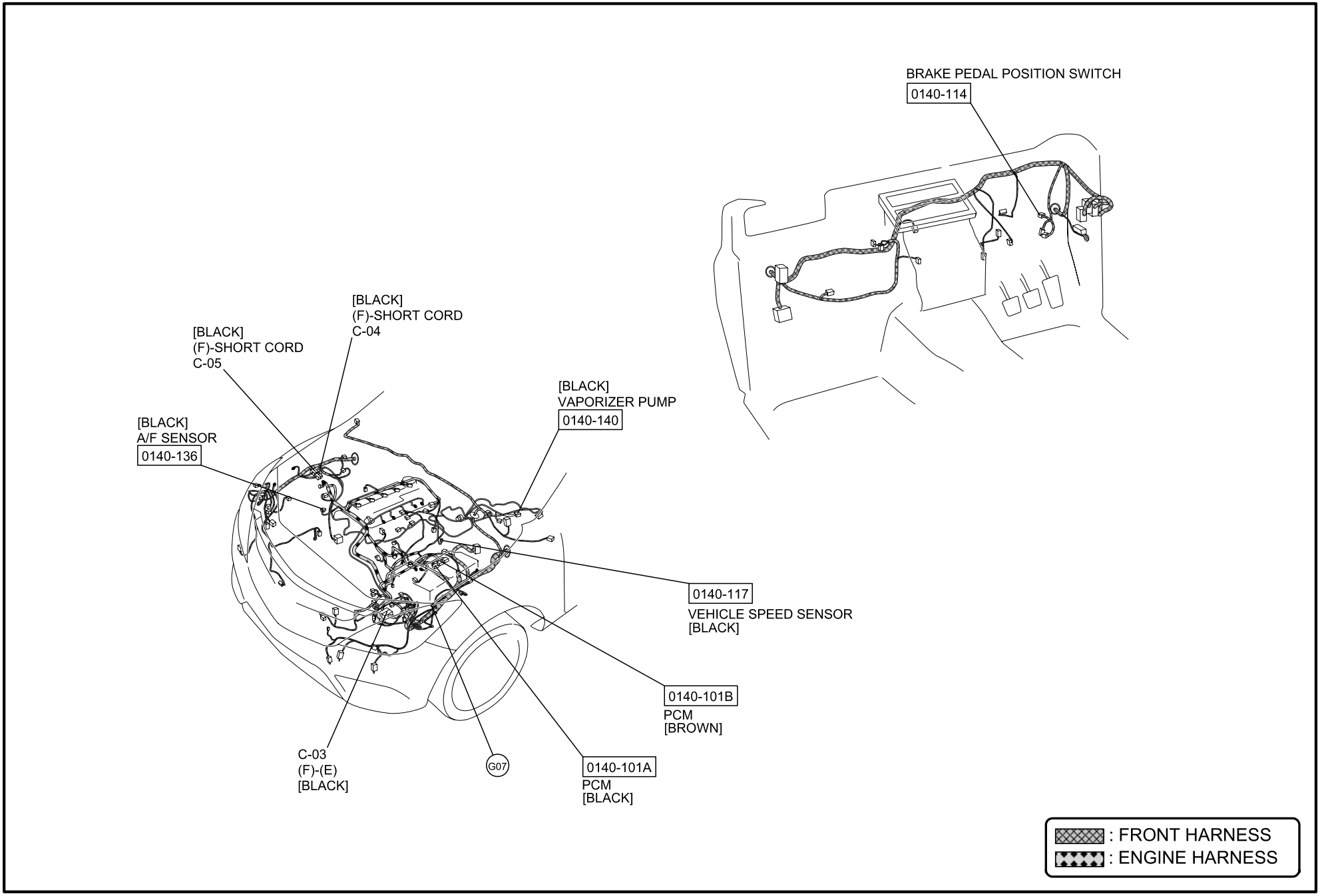
BRAKE PEDAL POSITION SWITCH
0140-114
[BLACK]
(F)-SHORT CORD
C-04
[BLACK]
(F)-SHORT CORD
C-05
[BLACK]
VAPORIZER PUMP
0140-140
[BLACK]
A/F SENSOR
0140-136
0140-117
VEHICLE SPEED SENSOR
[BLACK]
0140-101B
PCM
[BROWN]
C-03
(F)-(E)
[BLACK]
G07
0140-101A
PCM
[BLACK]
: FRONT HARNESS
: ENGINE HARNESS

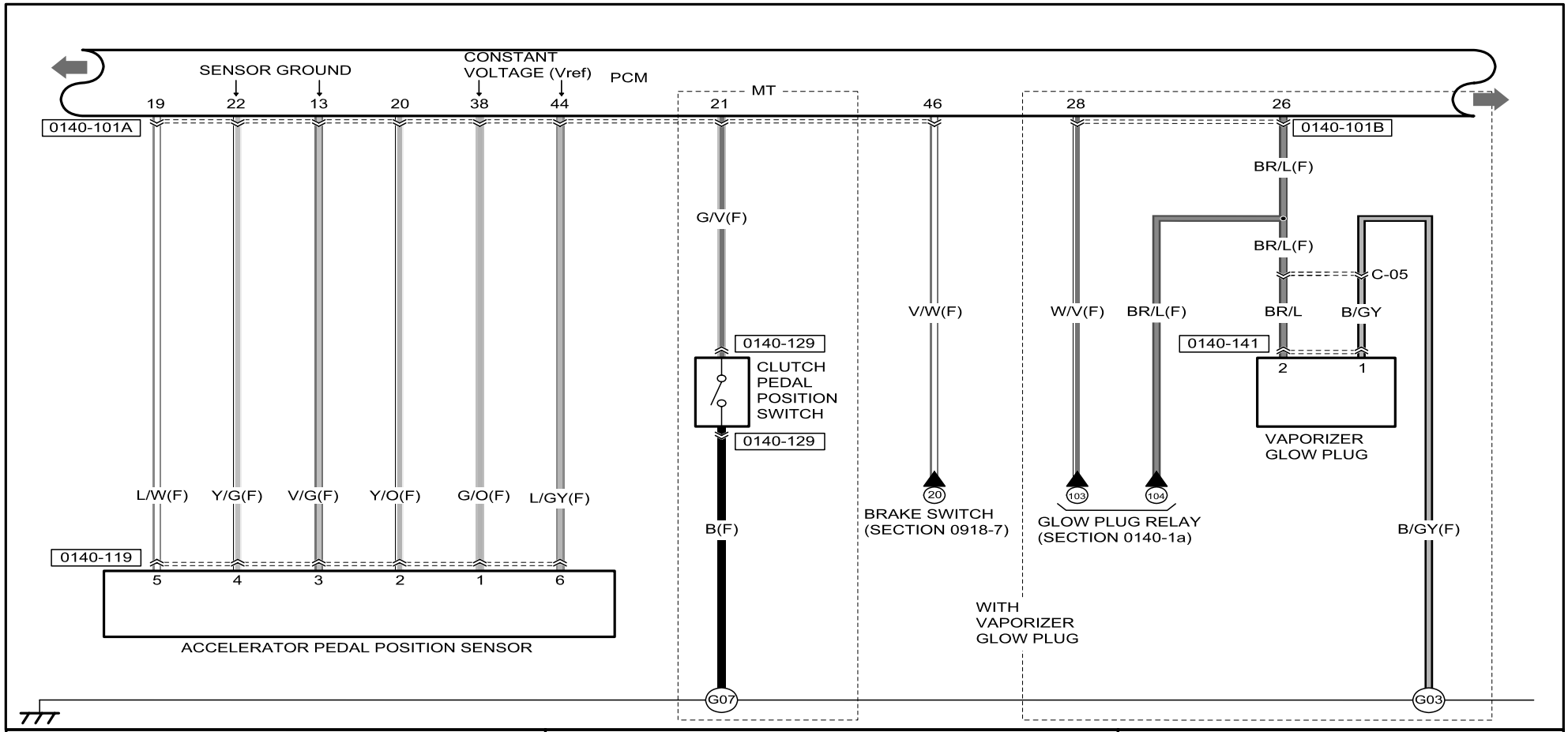

0140-101A
PCM

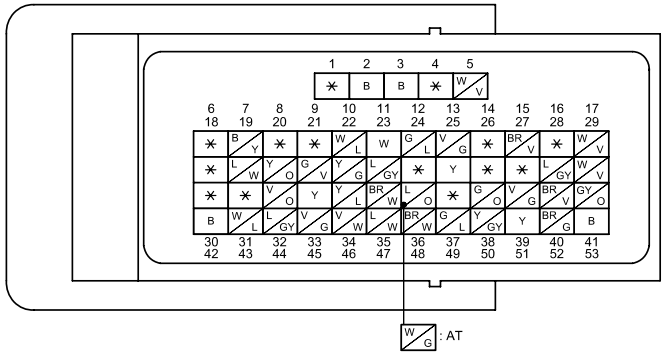

0140-101B
PCM

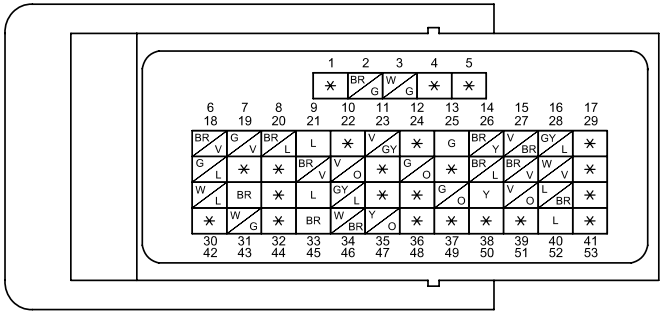

0140-119
ACCELERATOR PEDAL POSITION SENSOR

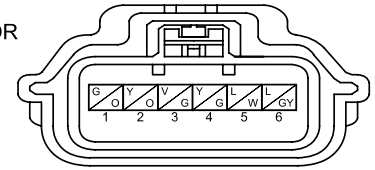

0140-129
CLUTCH PEDAL POSITION SWITCH

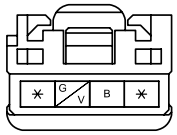

0140-141
VAPORIZER GLOW PLUG

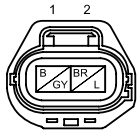

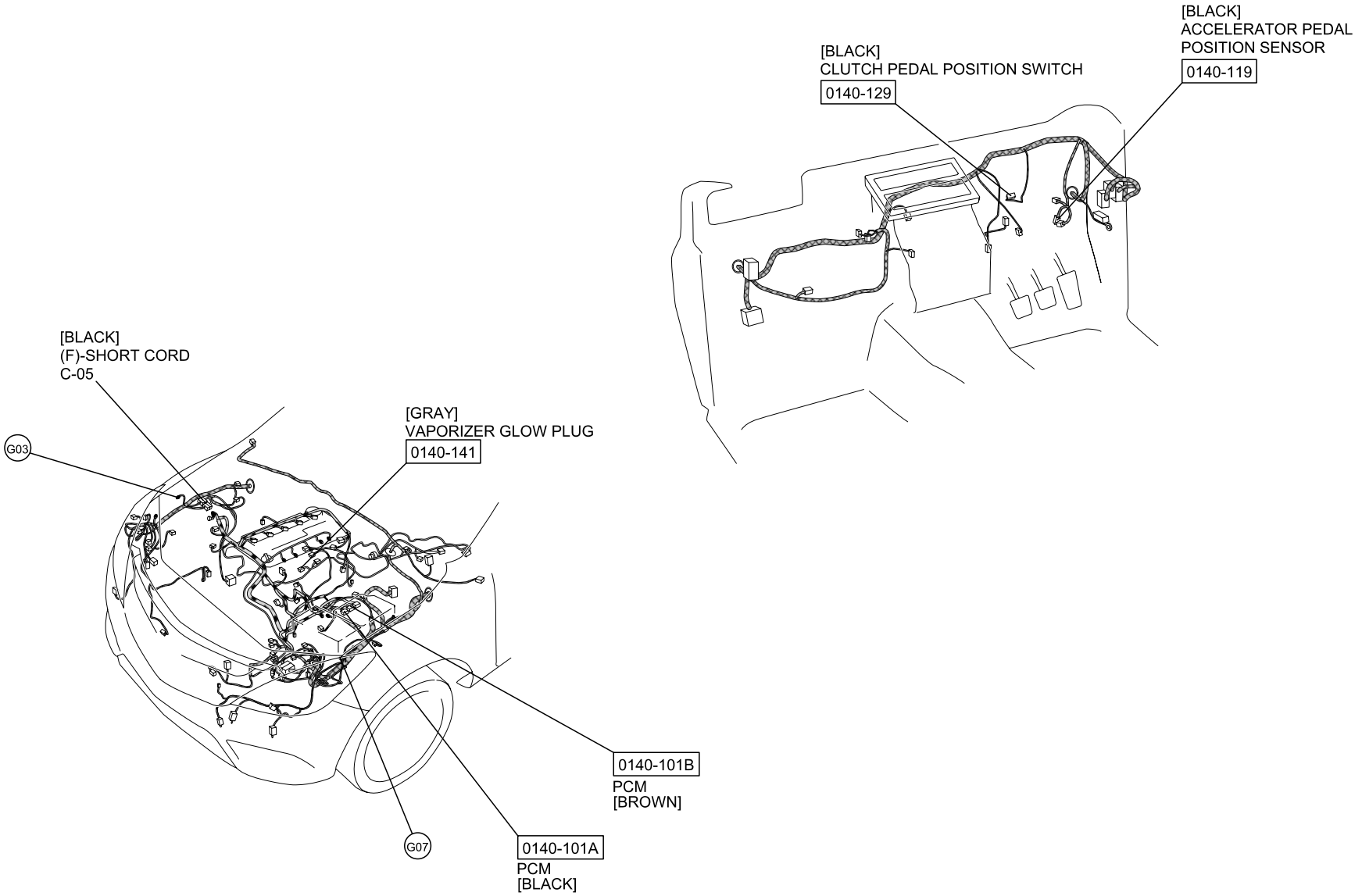
[BLACK]
ACCELERATOR PEDAL
POSITION SENSOR
0140-119
[BLACK]
CLUTCH PEDAL POSITION SWITCH
0140-129
[BLACK]
(F)-SHORT CORD
C-05
G03
[GRAY]
VAPORIZER GLOW PLUG
0140-141
0140-101B
PCM
[BROWN]
G07
0140-101A
PCM
[BLACK]
: FRONT HARNESS
: ENGINE HARNESS

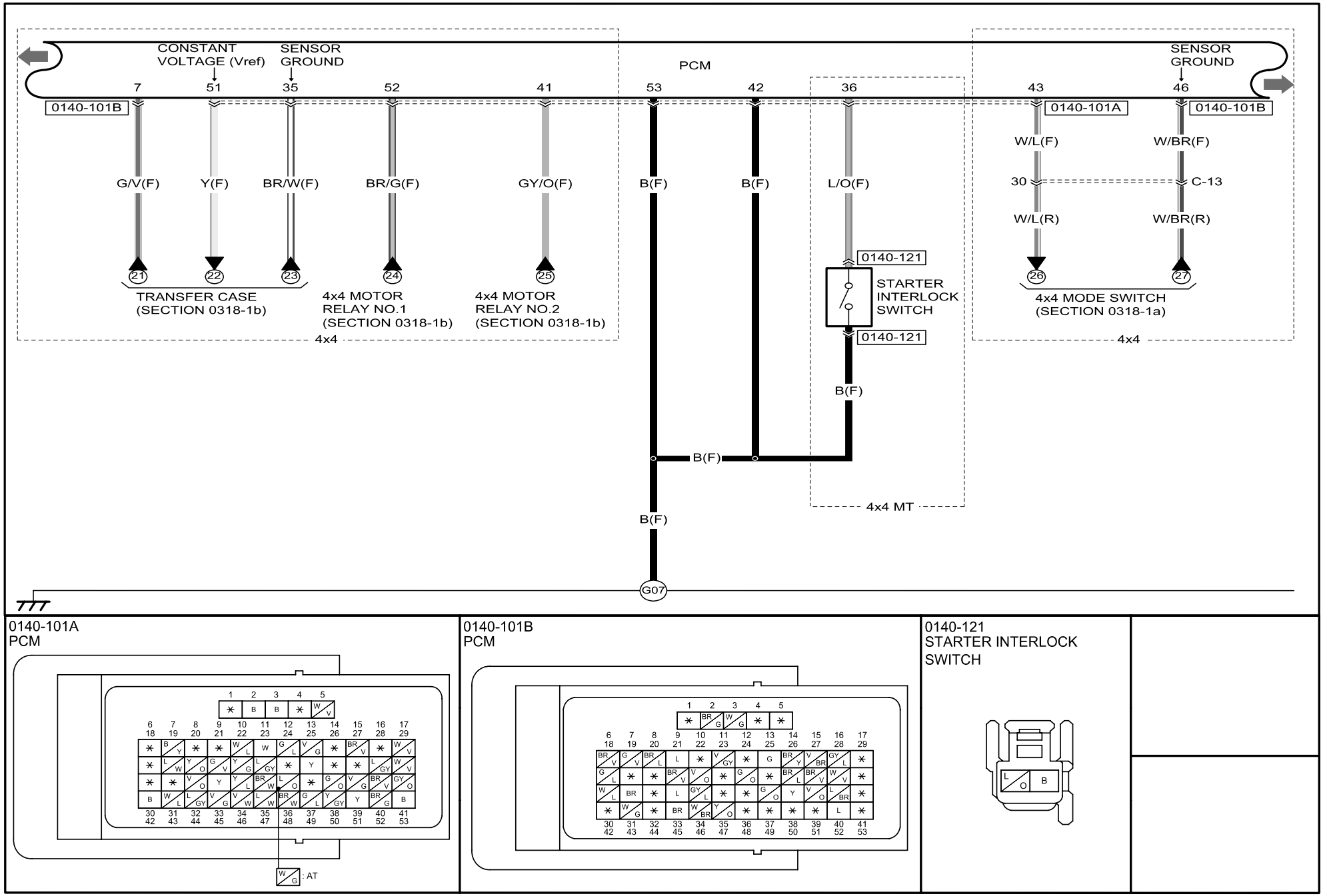
CONSTANT VOLTAGE (Vref)
SENSOR GROUND
PCM
SENSOR GROUND
7
51
35
52
41
53
42
36
43
46
0140-101B
0140-101A
0140-101B
G/V(F)
Y(F)
BR/W(F)
BR/G(F)
GY/O(F)
B(F)
B(F)
L/O(F)
W/L(F)
W/BR(F)
30
C-13
W/L(R)
W/BR(R)
0140-121
STARTER INTERLOCK SWITCH
0140-121
B(F)
B(F)
B(F)
21
22
23
24
25
26
27
TRANSFER CASE (SECTION 0318-1b)
4x4 MOTOR RELAY NO.1 (SECTION 0318-1b)
4x4 MOTOR RELAY NO.2 (SECTION 0318-1b)
4x4 MODE SWITCH (SECTION 0318-1a)
4x4
4x4
4x4 MT
G07
0140-101A
PCM
0140-101B
PCM
0140-121
STARTER INTERLOCK SWITCH
: AT

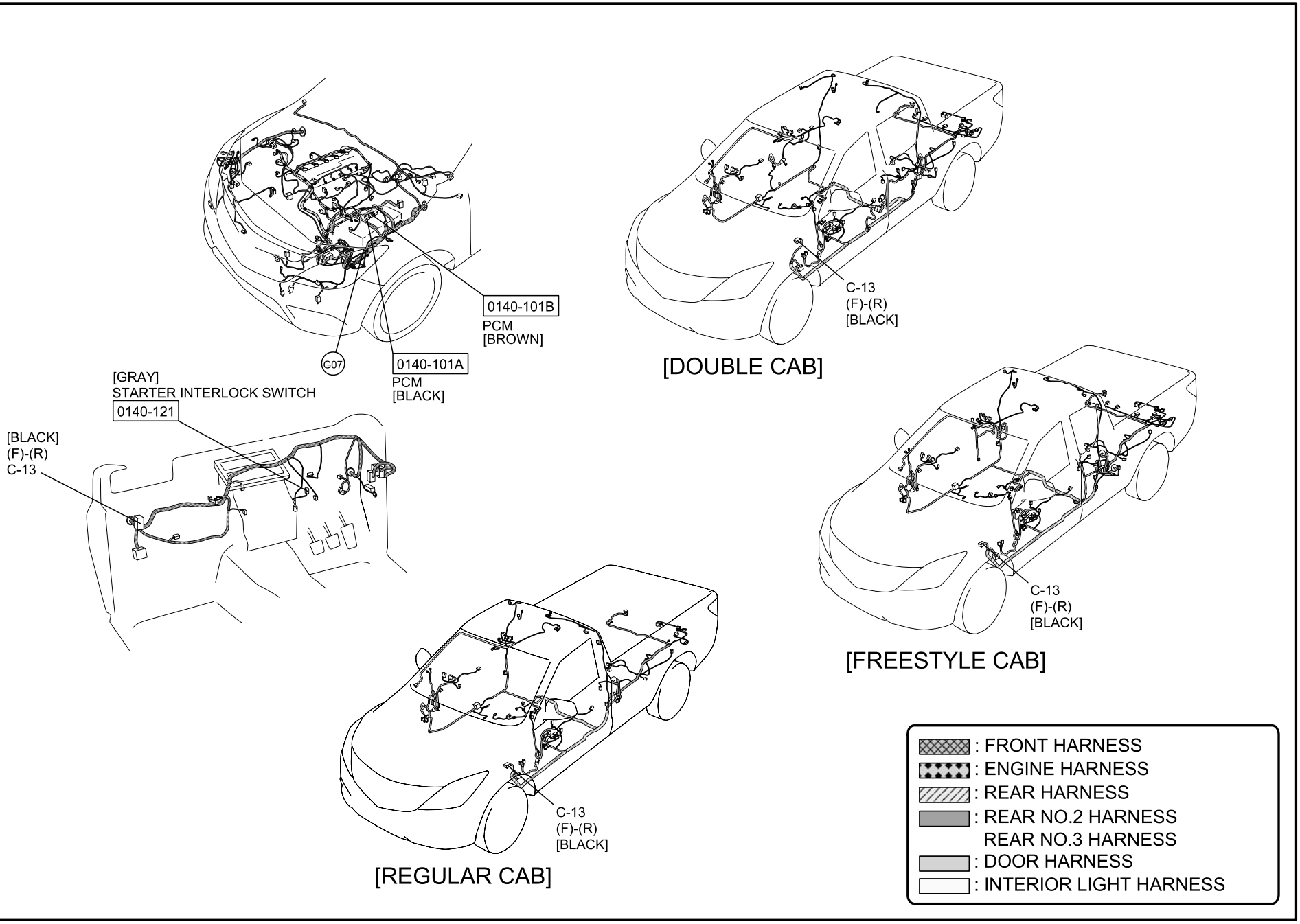
0140-101B
PCM
[BROWN]
G07
0140-101A
PCM
[BLACK]
[GRAY]
STARTER INTERLOCK SWITCH
0140-121
[BLACK]
(F)-(R)
C-13
C-13
(F)-(R)
[BLACK]
[DOUBLE CAB]
C-13
(F)-(R)
[BLACK]
[FREESTYLE CAB]
C-13
(F)-(R)
[BLACK]
[REGULAR CAB]
: FRONT HARNESS
: ENGINE HARNESS
: REAR HARNESS
: REAR NO.2 HARNESS
REAR NO.3 HARNESS
: DOOR HARNESS
: INTERIOR LIGHT HARNESS

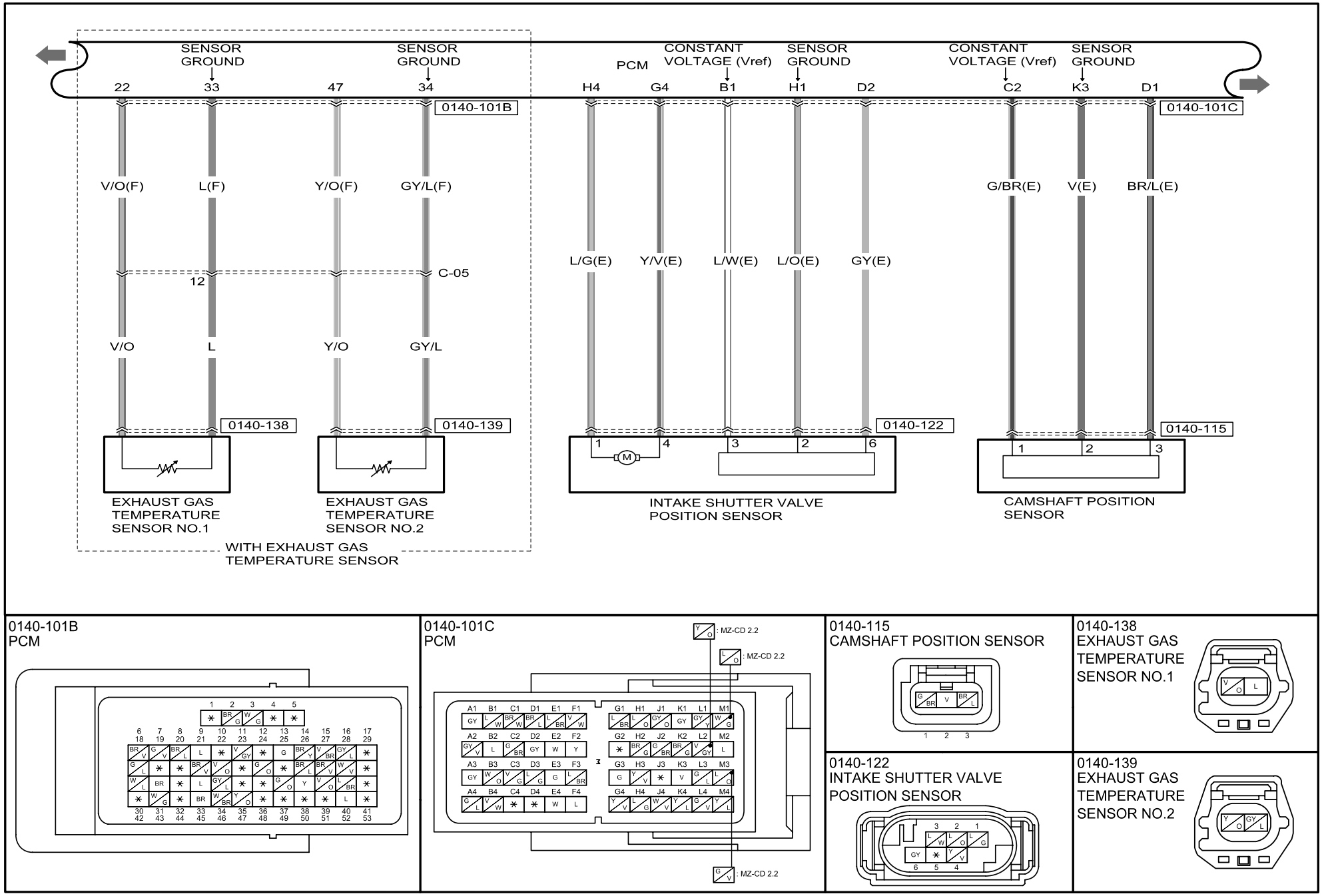
SENSOR GROUND
SENSOR GROUND
PCM
CONSTANT VOLTAGE (Vref)
SENSOR GROUND
CONSTANT VOLTAGE (Vref)
SENSOR GROUND
22
33
47
34
H4
G4
B1
H1
D2
C2
K3
D1
0140-101B
0140-101C
V/O(F)
L(F)
Y/O(F)
GY/L(F)
G/BR(E)
V(E)
BR/L(E)
12
C-05
L/G(E)
Y/V(E)
L/W(E)
L/O(E)
GY(E)
V/O
L
Y/O
GY/L
0140-138
0140-139
0140-122
0140-115
EXHAUST GAS TEMPERATURE SENSOR NO.1
EXHAUST GAS TEMPERATURE SENSOR NO.2
INTAKE SHUTTER VALVE POSITION SENSOR
CAMSHAFT POSITION SENSOR
WITH EXHAUST GAS TEMPERATURE SENSOR
0140-101B PCM
0140-101C PCM
: MZ-CD 2.2
0140-115 CAMSHAFT POSITION SENSOR
0140-138 EXHAUST GAS TEMPERATURE SENSOR NO.1
0140-122 INTAKE SHUTTER VALVE POSITION SENSOR
0140-139 EXHAUST GAS TEMPERATURE SENSOR NO.2

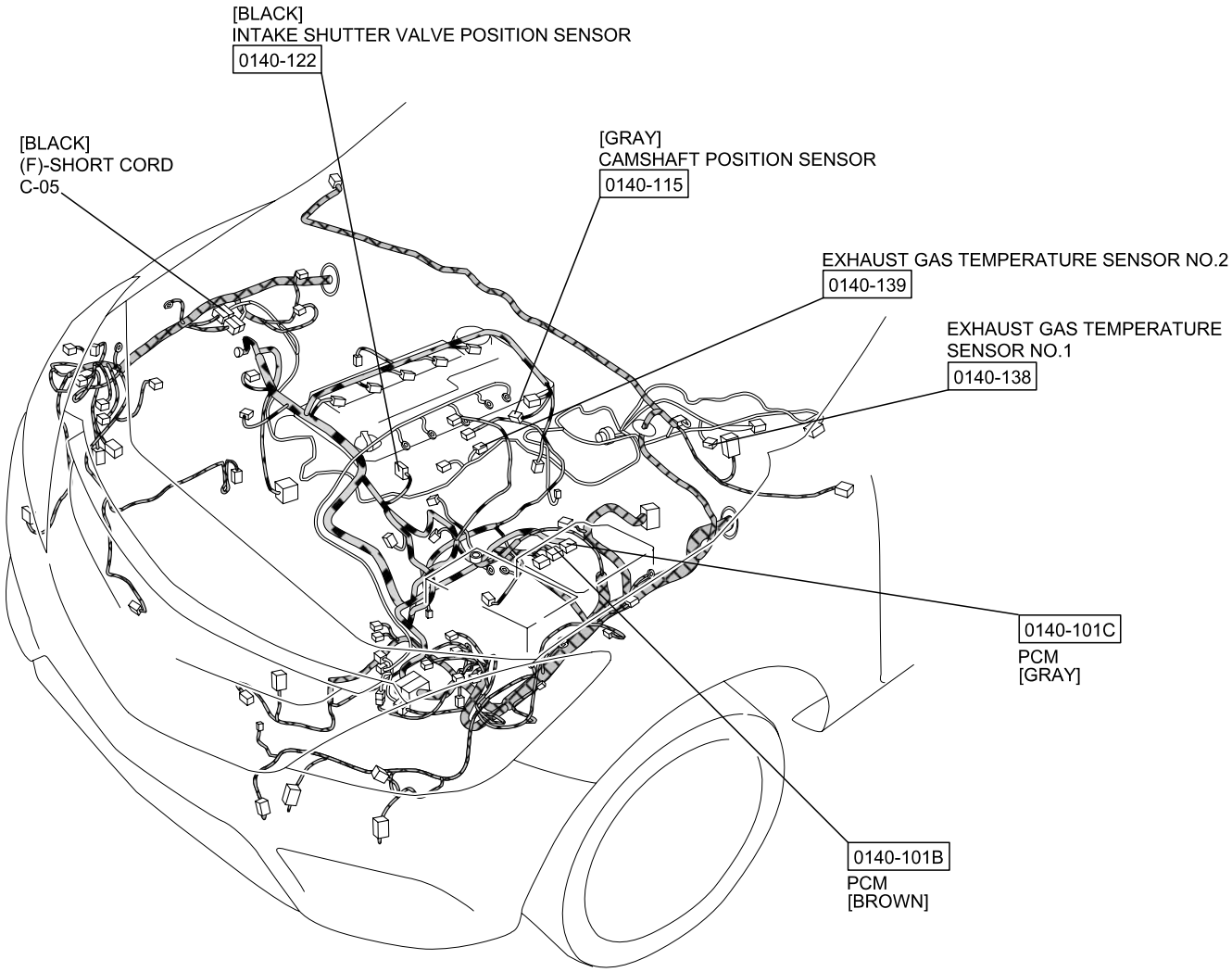

: FRONT HARNESS
: ENGINE HARNESS

#2 : MZ-CD 2.2
& : MZ-CD 3.2 I5

PCM

L3 M4 L1 M1←#2 M3←& M1

0140-101C

G/L(E) Y/L(E) GY/Y(E)

#2

FUEL INJECTOR NO.3 (SECTION 0140-1n) 28 V/GY(E)

GY/Y(E) L/O(E) BR(E) W/G(E)

0140-123 0140-124 0140-127

FUEL INJECTOR NO.1 FUEL INJECTOR NO.2 FUEL INJECTOR NO.5

&

0140-101C
PCM

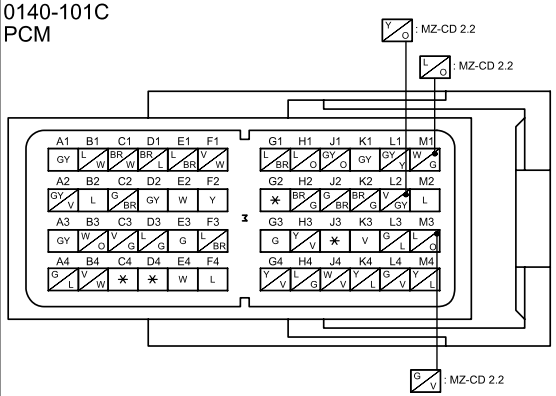

0140-123
FUEL INJECTOR NO.1

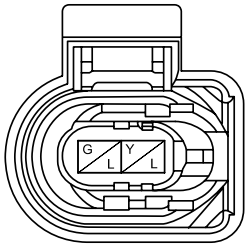

0140-124
FUEL INJECTOR NO.2

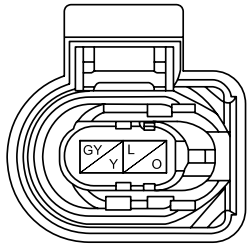

0140-127
FUEL INJECTOR NO.5

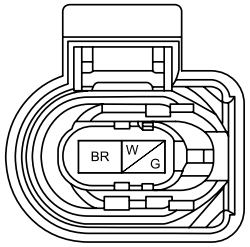

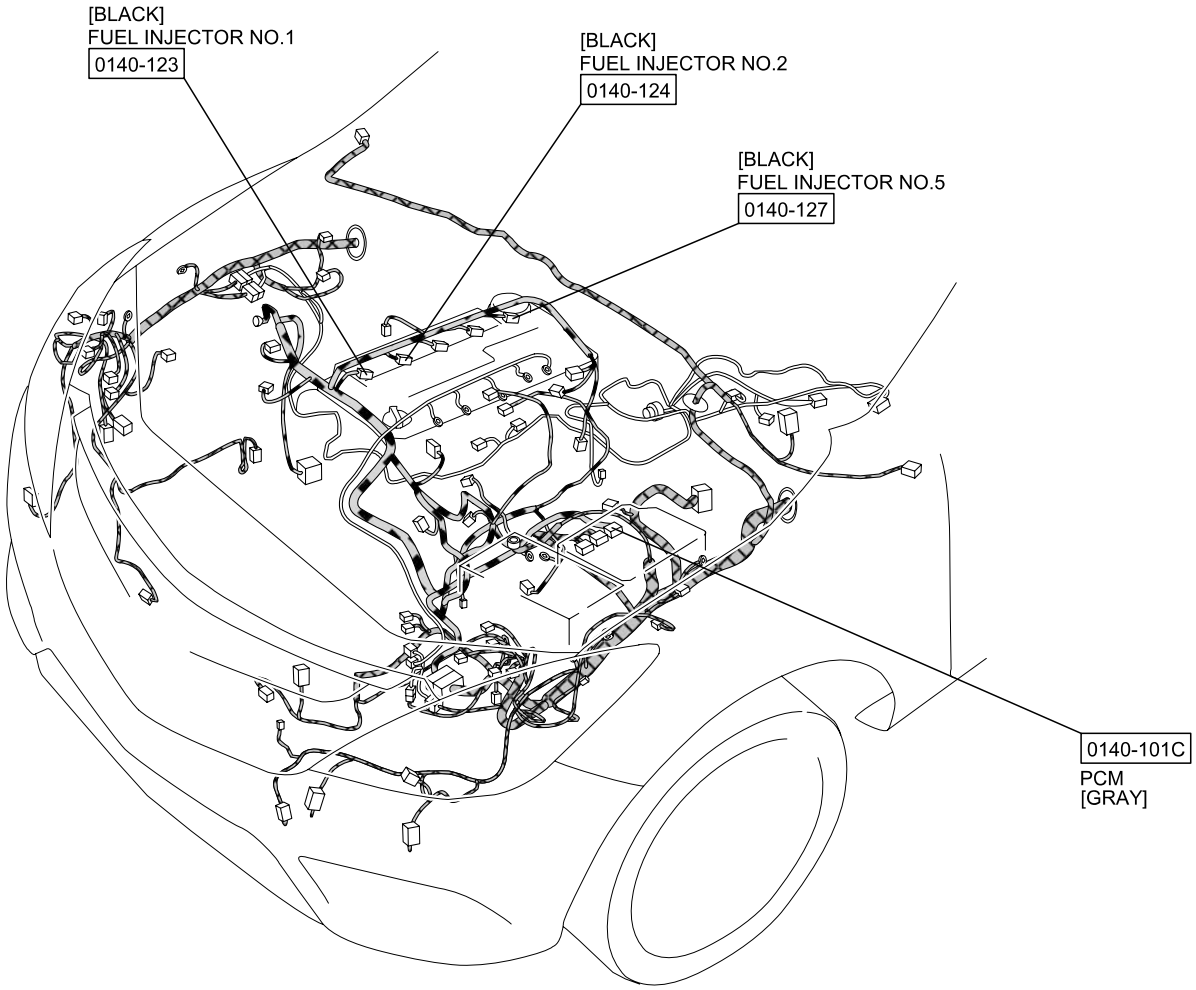

: FRONT HARNESS
: ENGINE HARNESS

@2 : WITH WASTEGATE VALVE ACTUATOR POSITION SENSOR
#2 : MZ-CD 2.2 & : MZ-CD 3.2 I5

PCM
& L2
M3 ← #2
L4 ← &
#2 L2
M2
C3
K1
0140-101C
V/GY(E)
G/V(E)
Y/O(E)
PCM (SECTION 0140-1h)
17
#2
PCM (SECTION 0140-1m)
28
V/GY(E)
&
Y/O(E)
V/GY(E)
Y/O(E)
L(E)
V/G(E)
GY(E)
Y(E)
0140-126
0140-125
0140-128
1
2
3
FUEL INJECTOR NO.3
FUEL INJECTOR NO.4
WASTEGATE VALVE ACTUATOR POSITION SENSOR
@2

0140-101C
PCM

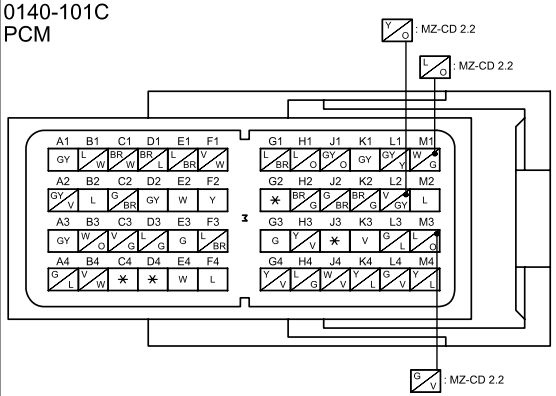

0140-125
FUEL INJECTOR NO.4

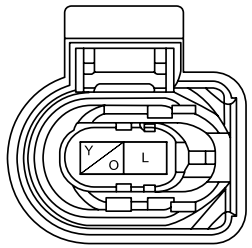

0140-126
FUEL INJECTOR NO.3

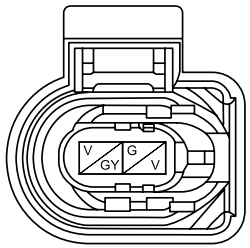

0140-128
WASTEGATE VALVE ACTUATOR POSITION SENSOR

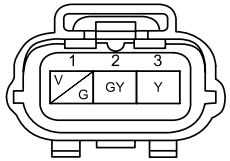

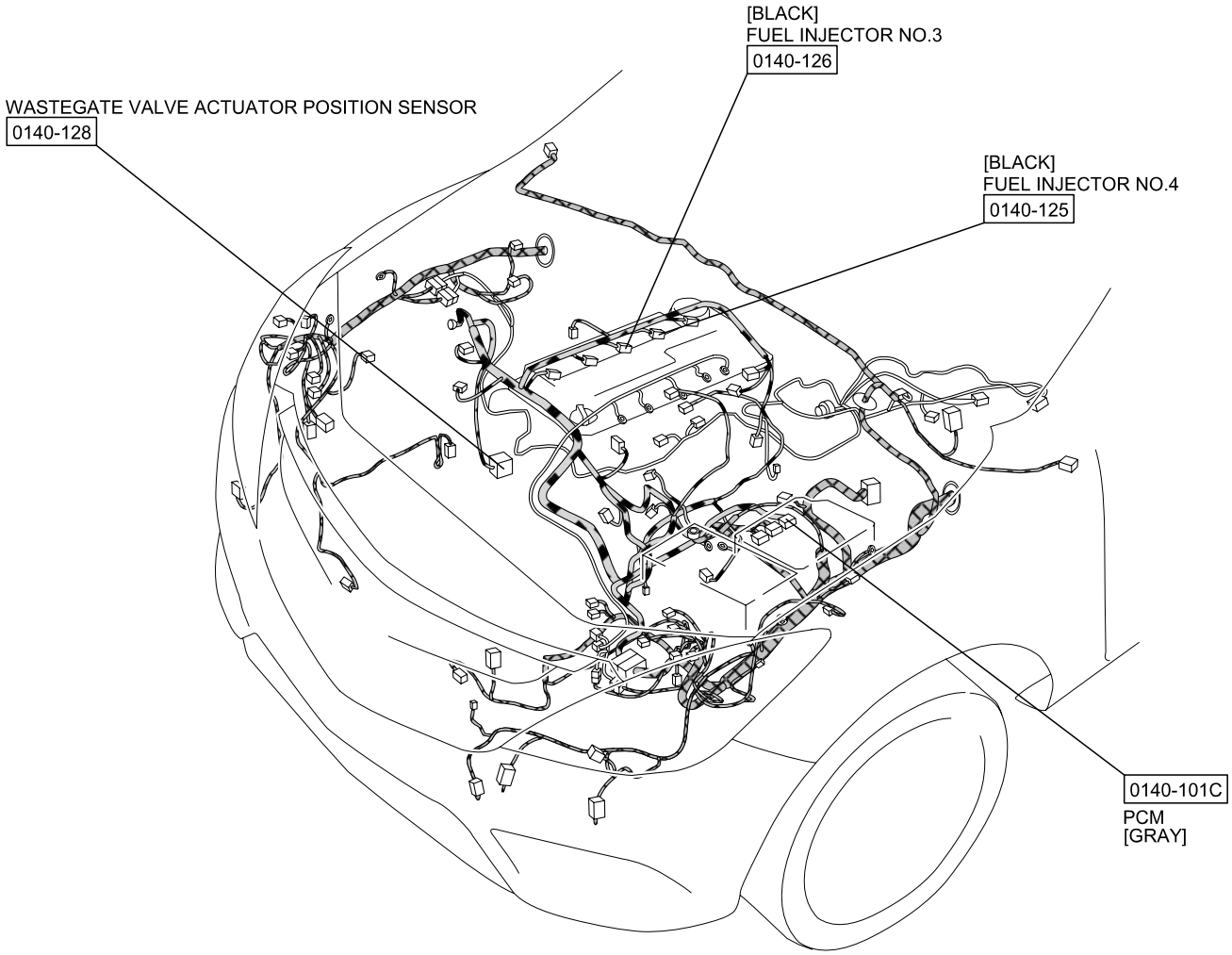

: FRONT HARNESS
: ENGINE HARNESS

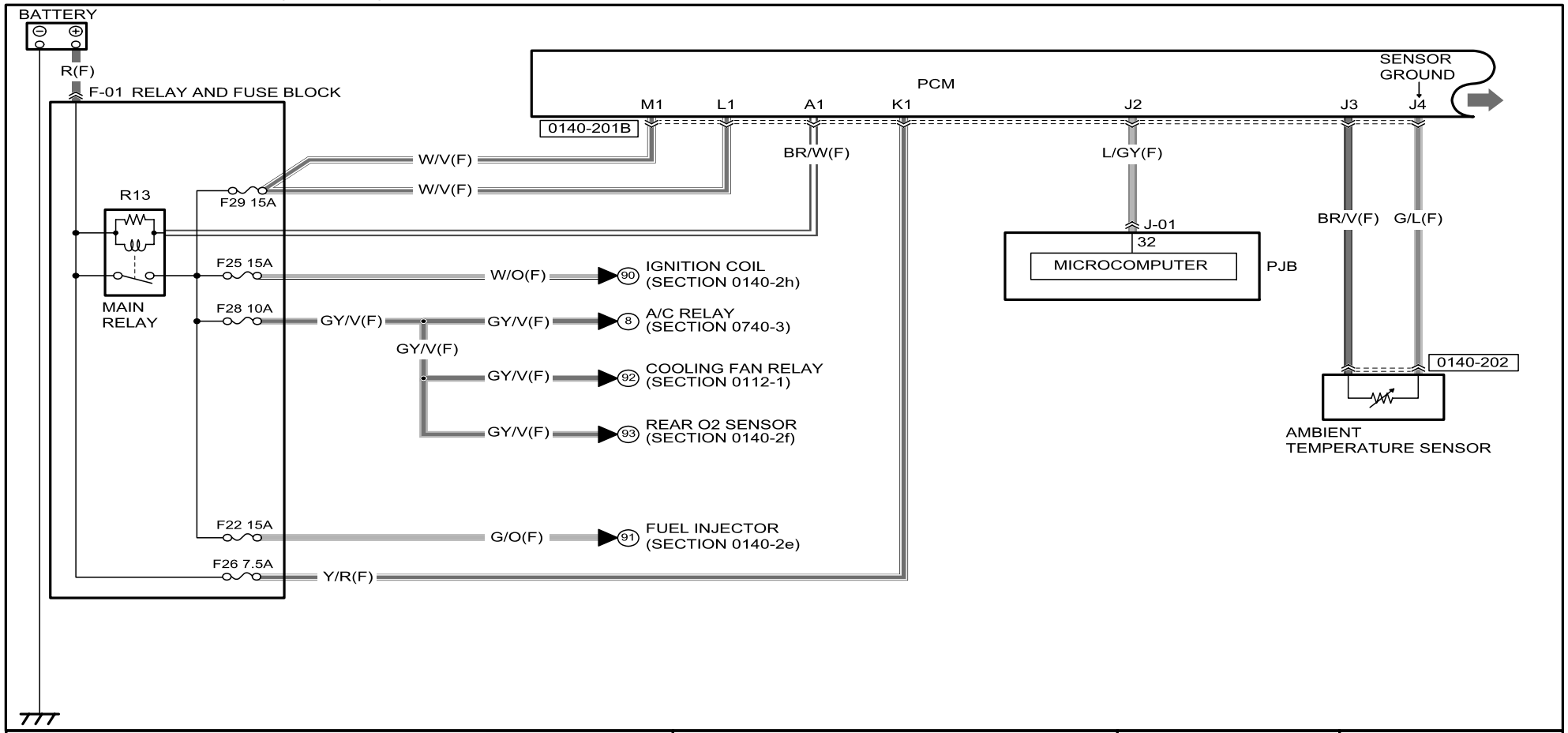

0140-201B
PCM

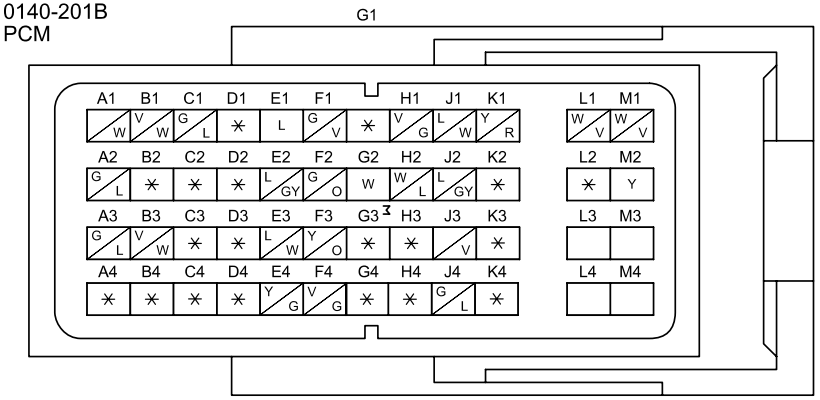

0140-202
AMBIENT TEMPERATURE SENSOR

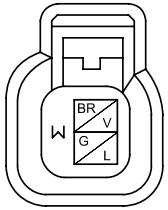

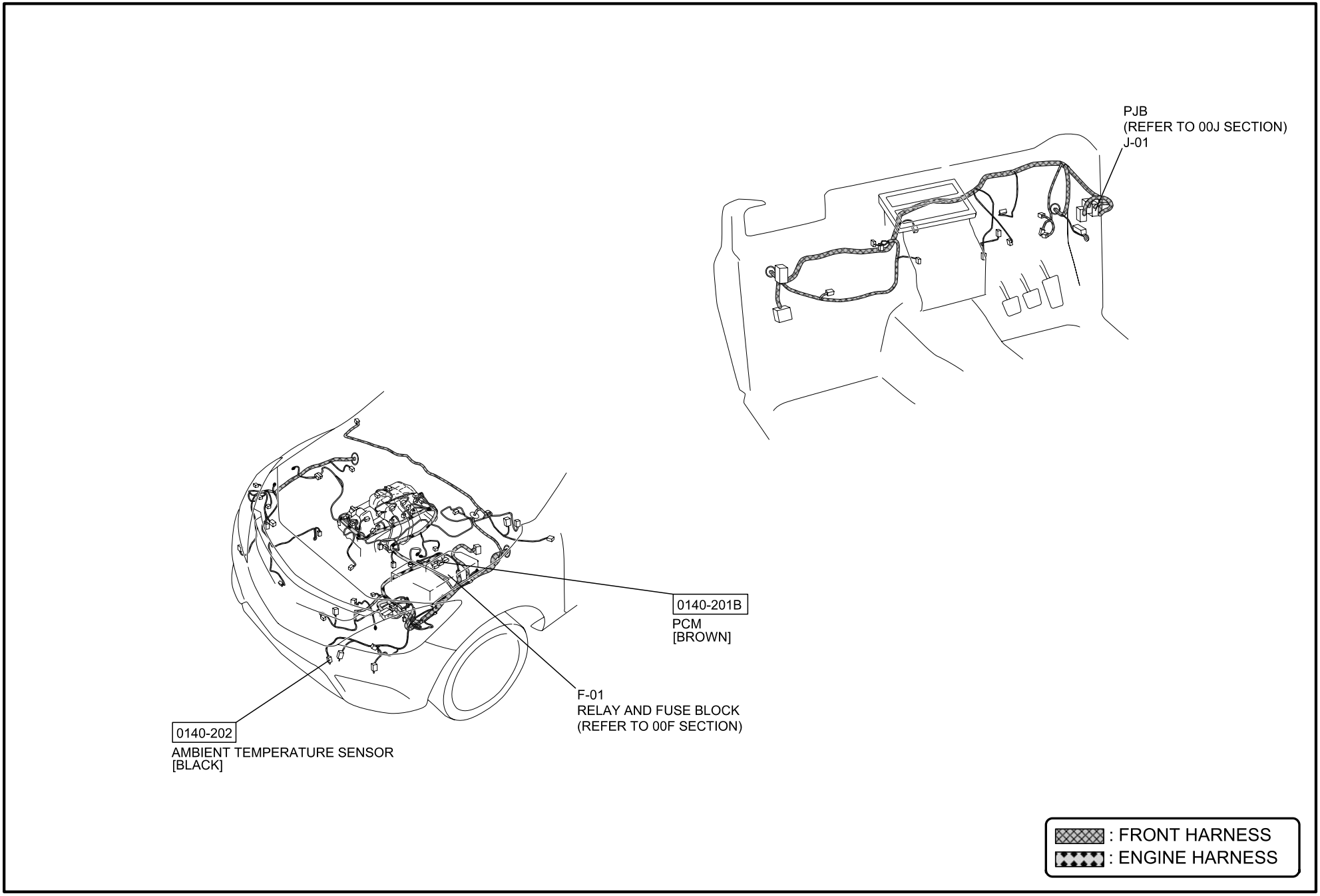
PJB
(REFER TO 00J SECTION)
J-01
0140-201B
PCM
[BROWN]
F-01
RELAY AND FUSE BLOCK
(REFER TO 00F SECTION)
0140-202
AMBIENT TEMPERATURE SENSOR
[BLACK]
: FRONT HARNESS
: ENGINE HARNESS

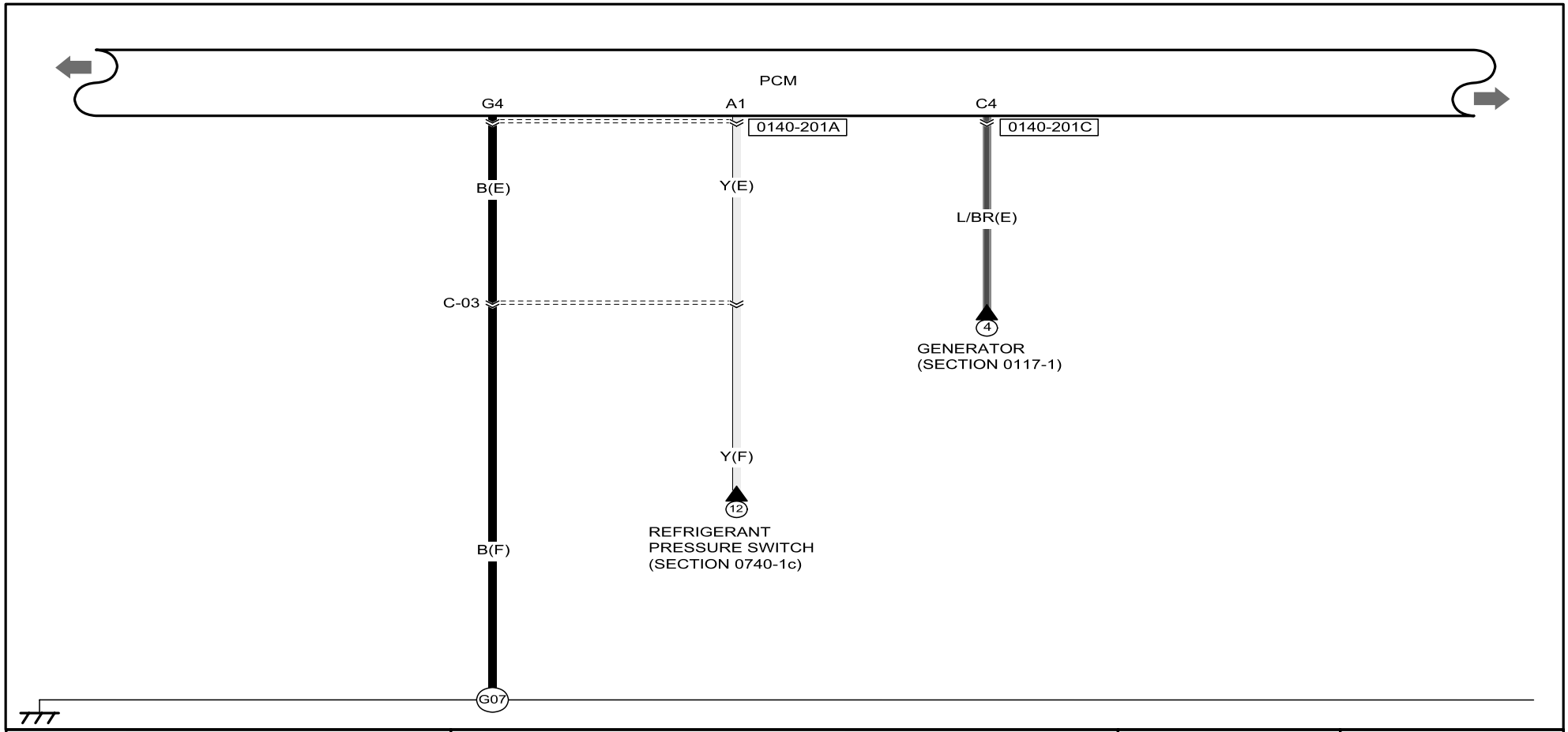

0140-201A
PCM

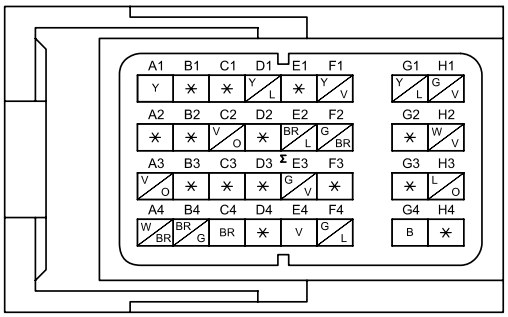

0140-201C
PCM

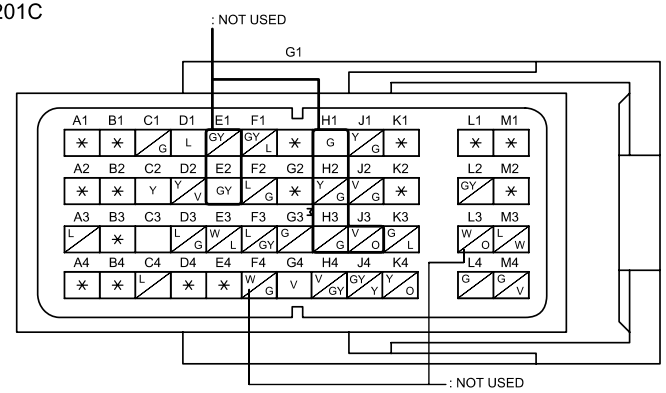

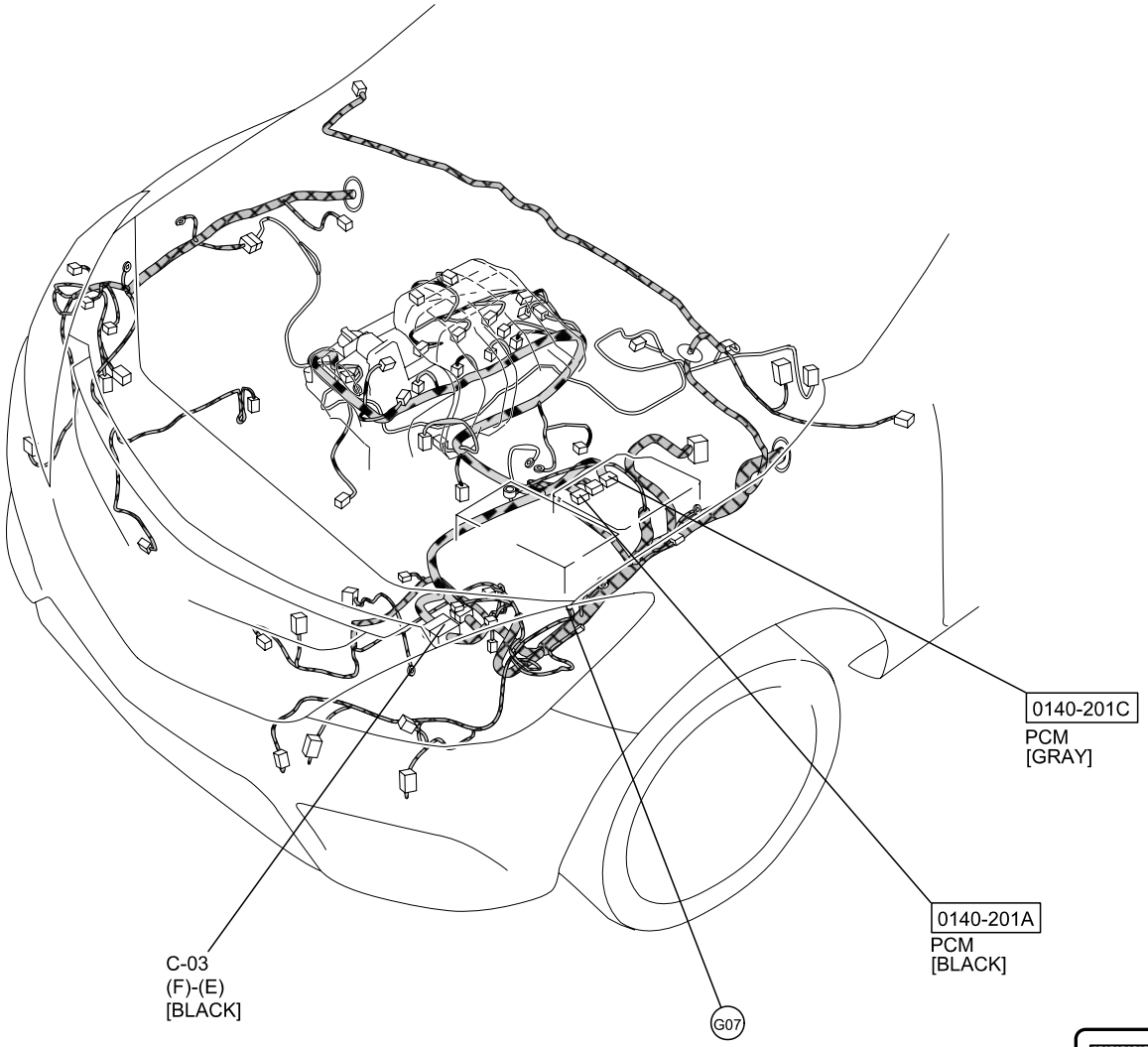
0140-201C
PCM
[GRAY]
0140-201A
PCM
[BLACK]
C-03
(F)-(E)
[BLACK]
G07
: FRONT HARNESS
: ENGINE HARNESS

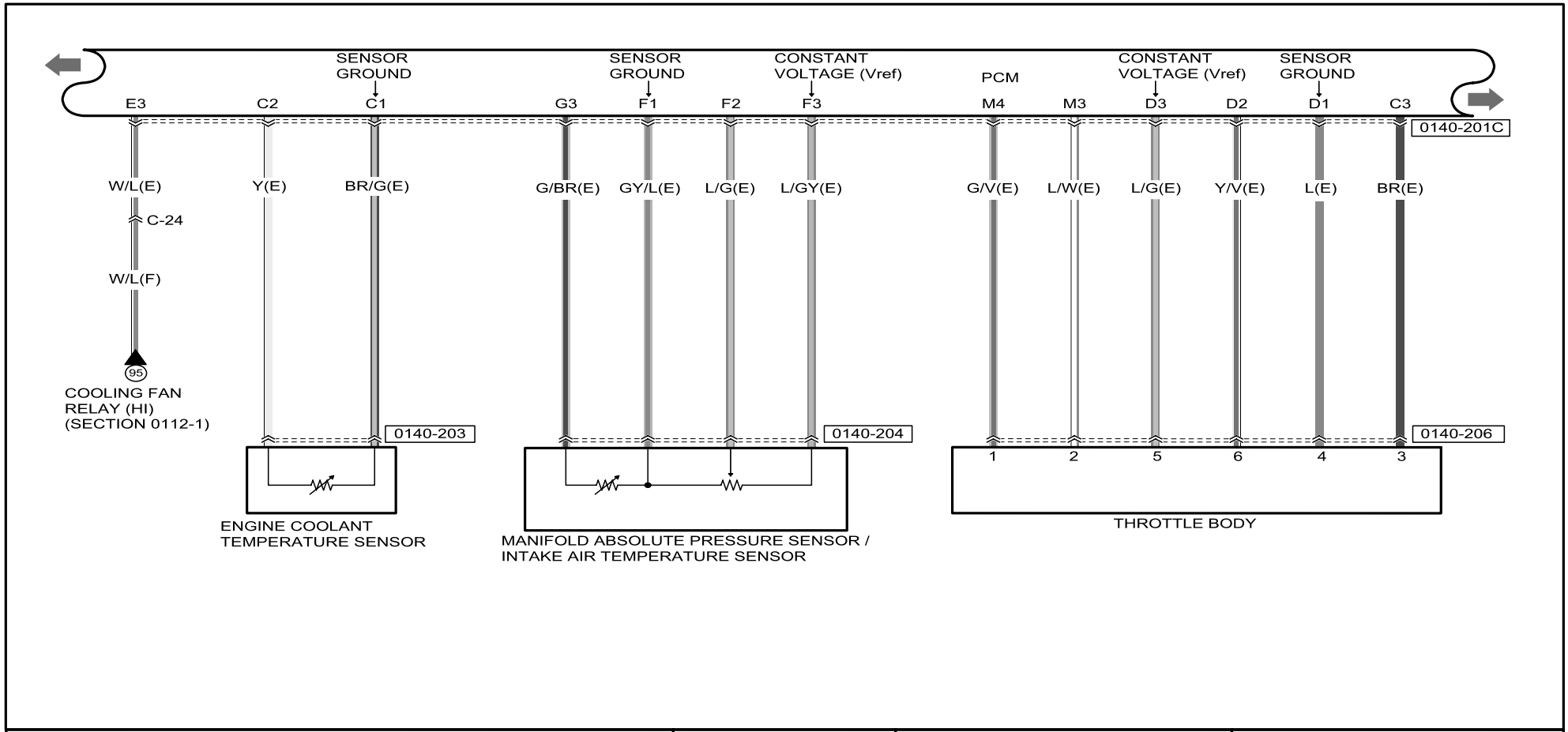

0140-201C
PCM

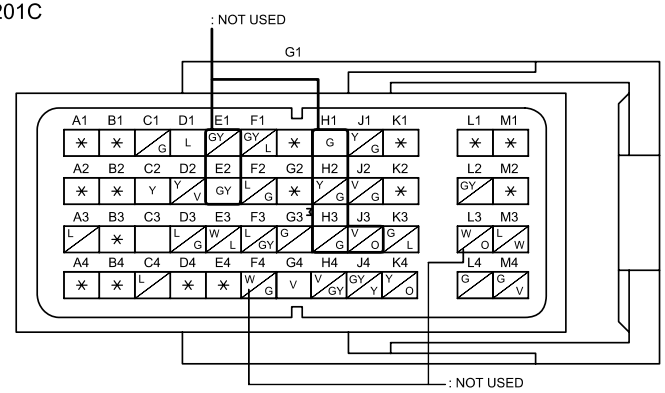

0140-203
ENGINE COOLANT TEMPERATURE SENSOR

0140-204
MANIFOLD ABSOLUTE PRESSURE SENSOR /
INTAKE AIR TEMPERATURE SENSOR

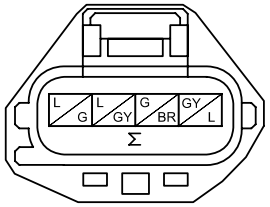

0140-206
THROTTLE BODY

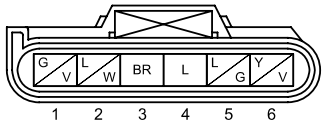

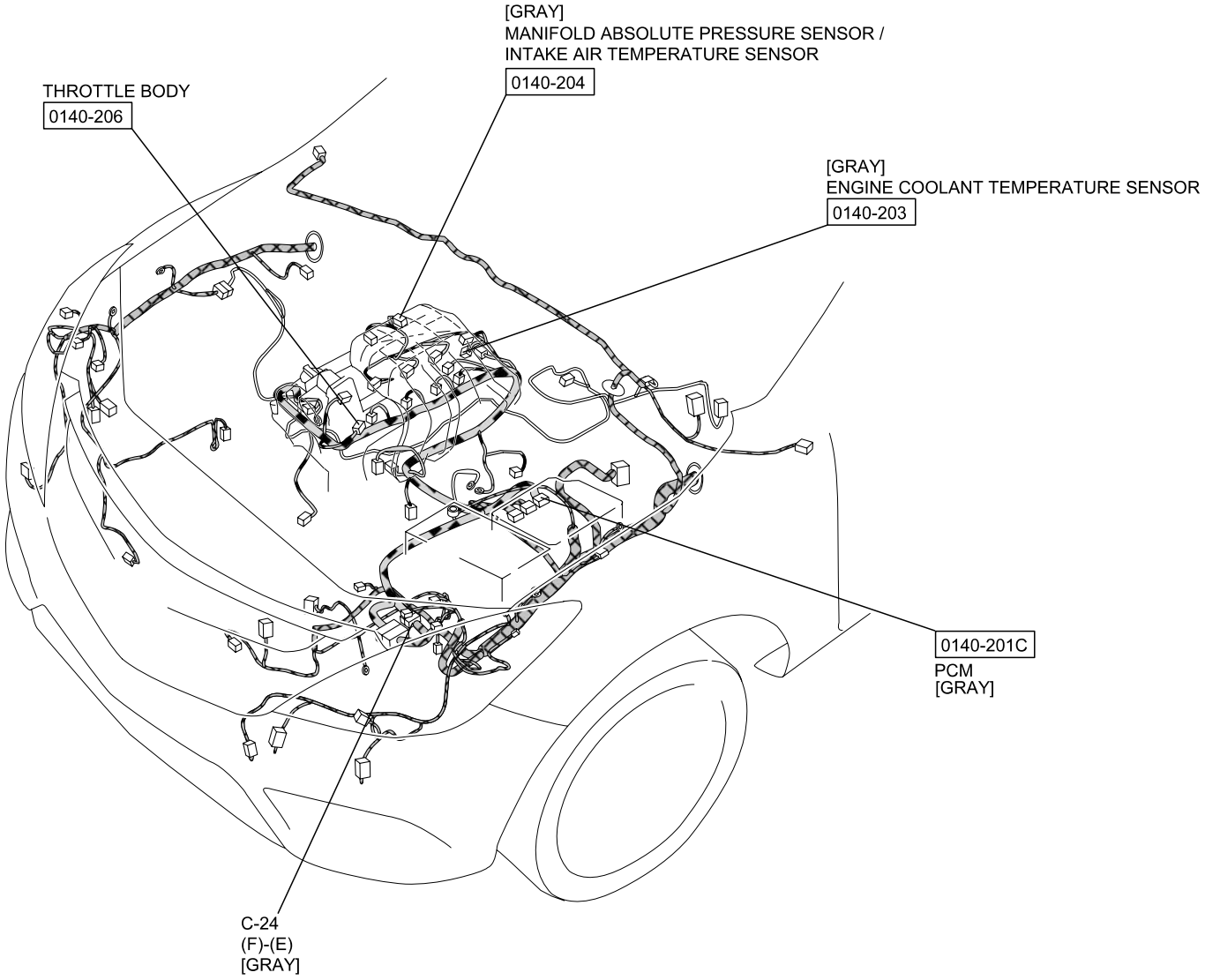

: FRONT HARNESS
: ENGINE HARNESS

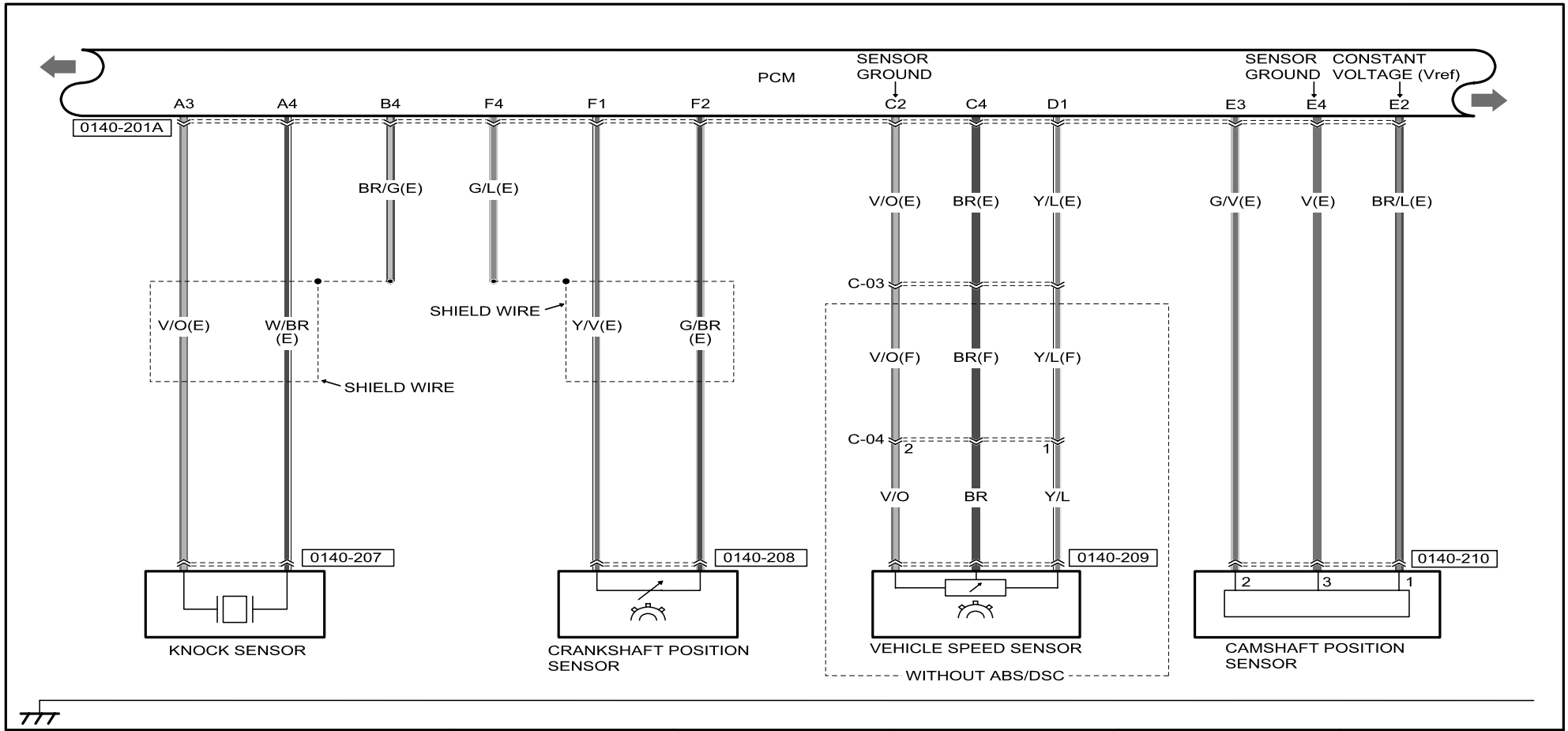

0140-201A
PCM

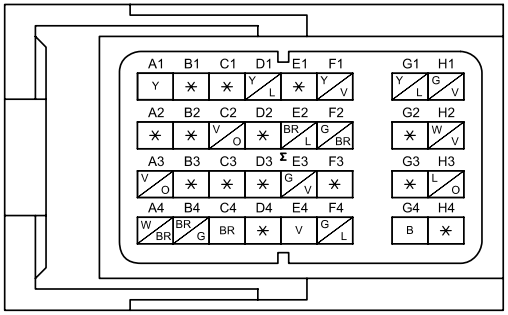

0140-207
KNOCK SENSOR

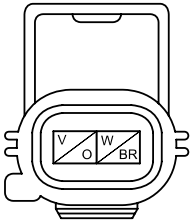

0140-208
CRANKSHAFT POSITION SENSOR

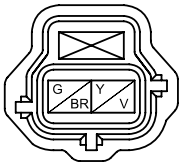

0140-209
VEHICLE SPEED SENSOR

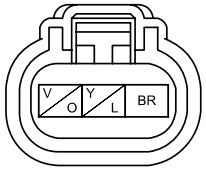

0140-210
CAMSHAFT POSITION SENSOR

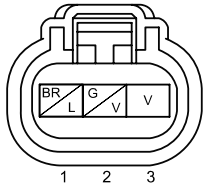

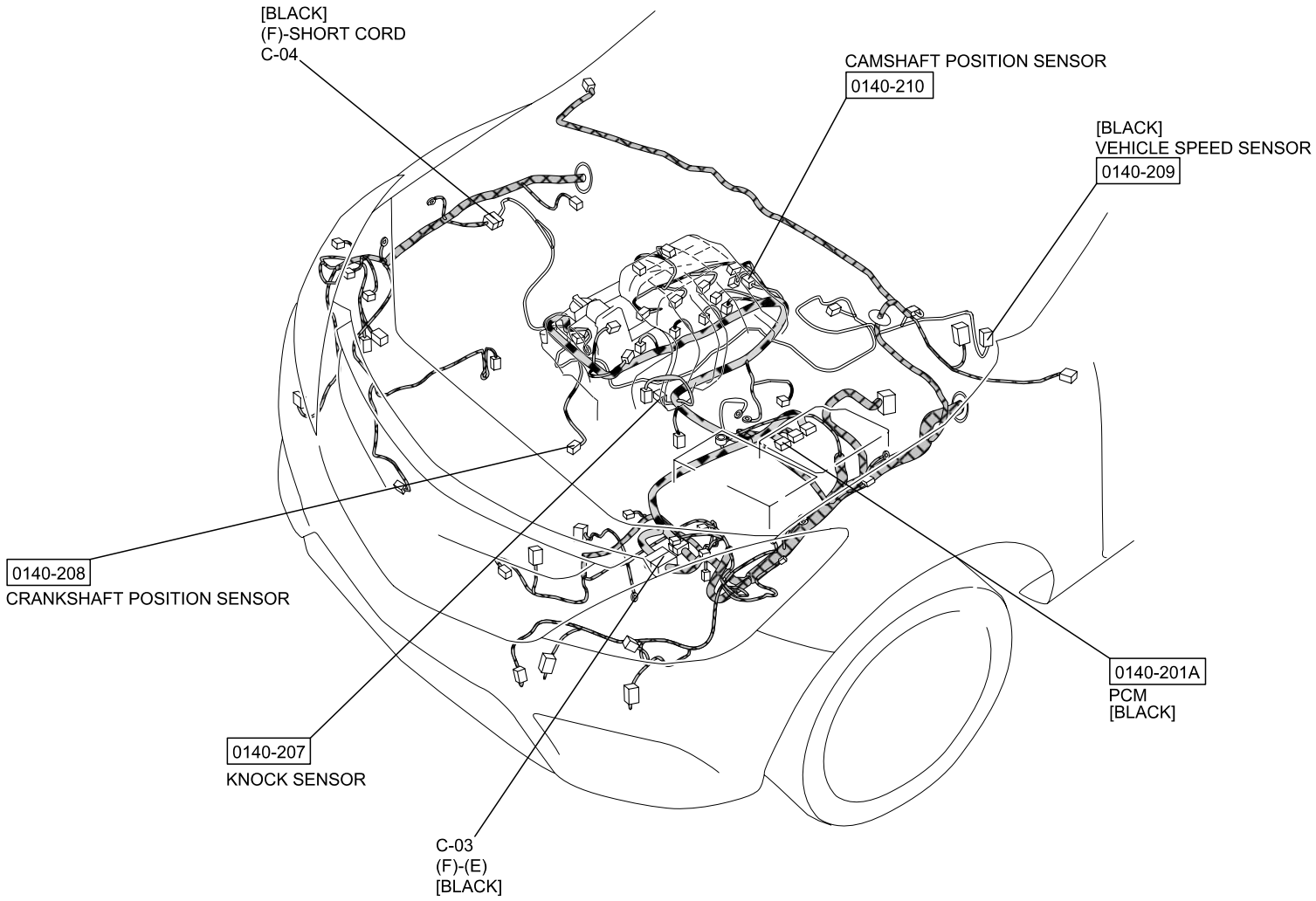

: FRONT HARNESS
: ENGINE HARNESS

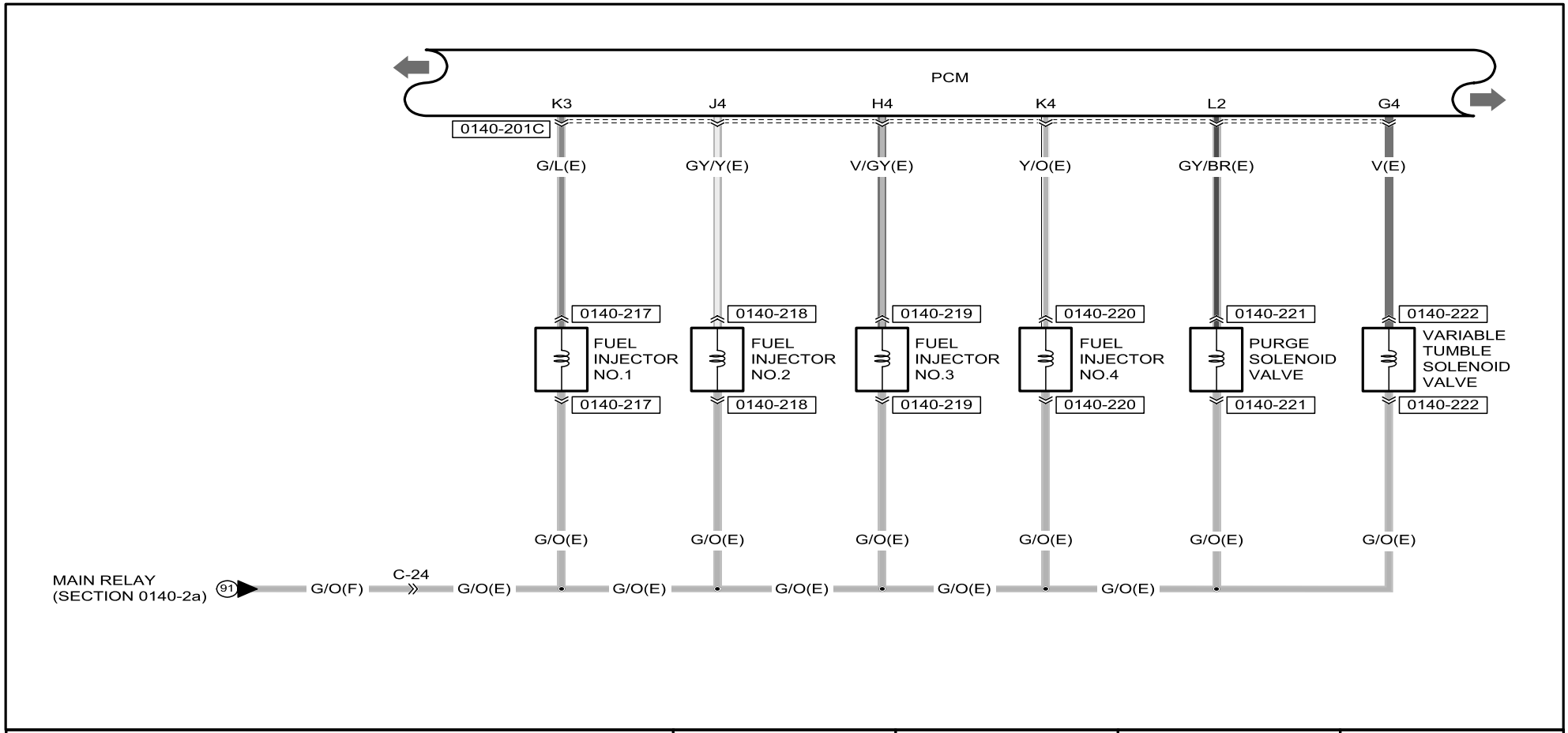
PCM
K3
J4
H4
K4
L2
G4
0140-201C
G/L(E)
GY/Y(E)
V/GY(E)
Y/O(E)
GY/BR(E)
V(E)
0140-217
0140-218
0140-219
0140-220
0140-221
0140-222
FUEL INJECTOR NO.1
FUEL INJECTOR NO.2
FUEL INJECTOR NO.3
FUEL INJECTOR NO.4
PURGE SOLENOID VALVE
VARIABLE TUMBLE SOLENOID VALVE
G/O(E)
MAIN RELAY (SECTION 0140-2a)
91
G/O(F)
C-24
0140-201C PCM
: NOT USED
G1
0140-217 FUEL INJECTOR NO.1
0140-218 FUEL INJECTOR NO.2
0140-219 FUEL INJECTOR NO.3
0140-220 FUEL INJECTOR NO.4
0140-221 PURGE SOLENOID VALVE
0140-222 VARIABLE TUMBLE SOLENOID VALVE

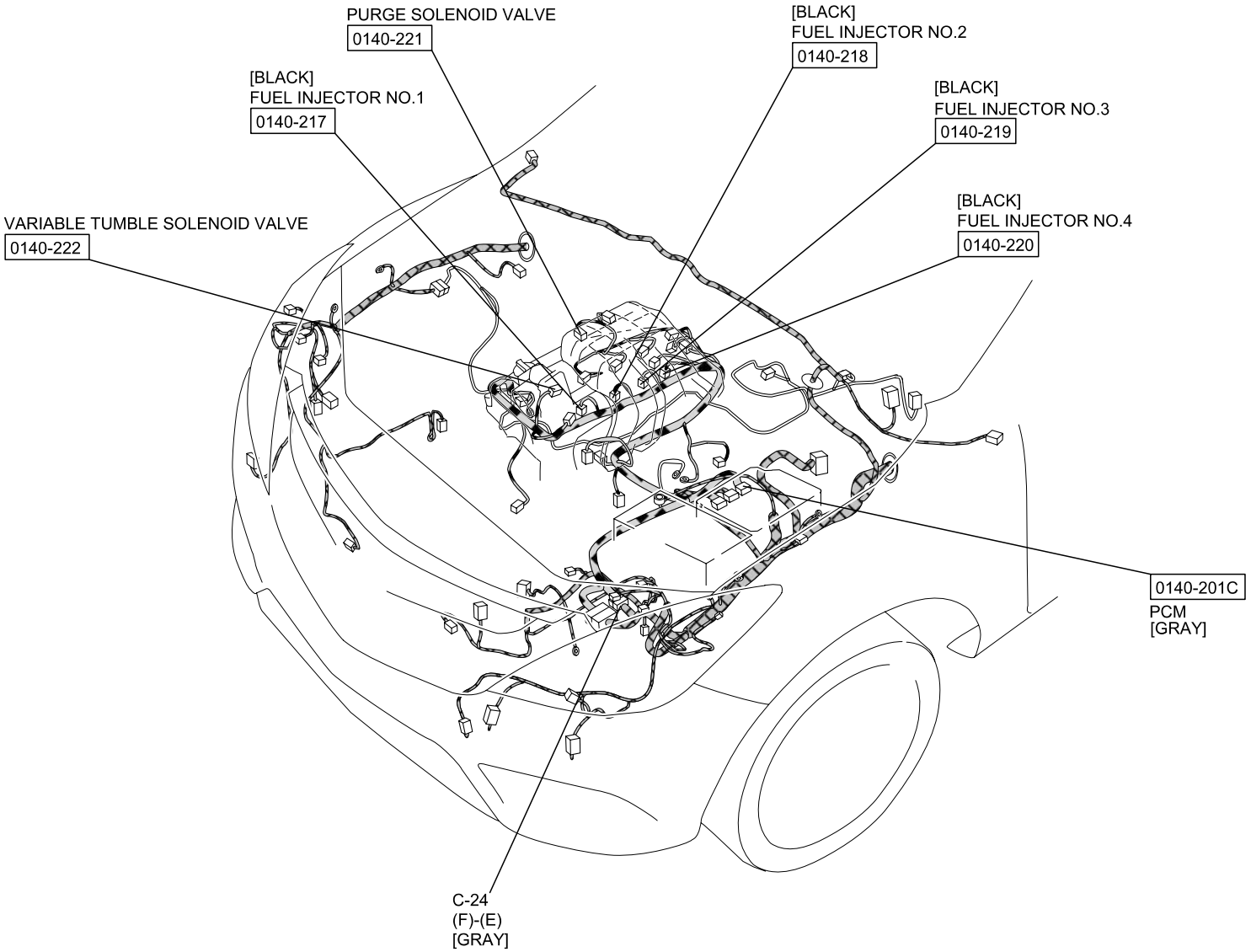
PURGE SOLENOID VALVE
0140-221
[BLACK]
FUEL INJECTOR NO.2
0140-218
[BLACK]
FUEL INJECTOR NO.1
0140-217
[BLACK]
FUEL INJECTOR NO.3
0140-219
[BLACK]
FUEL INJECTOR NO.4
0140-220
VARIABLE TUMBLE SOLENOID VALVE
0140-222
0140-201C
PCM
[GRAY]
C-24
(F)-(E)
[GRAY]
: FRONT HARNESS
: ENGINE HARNESS

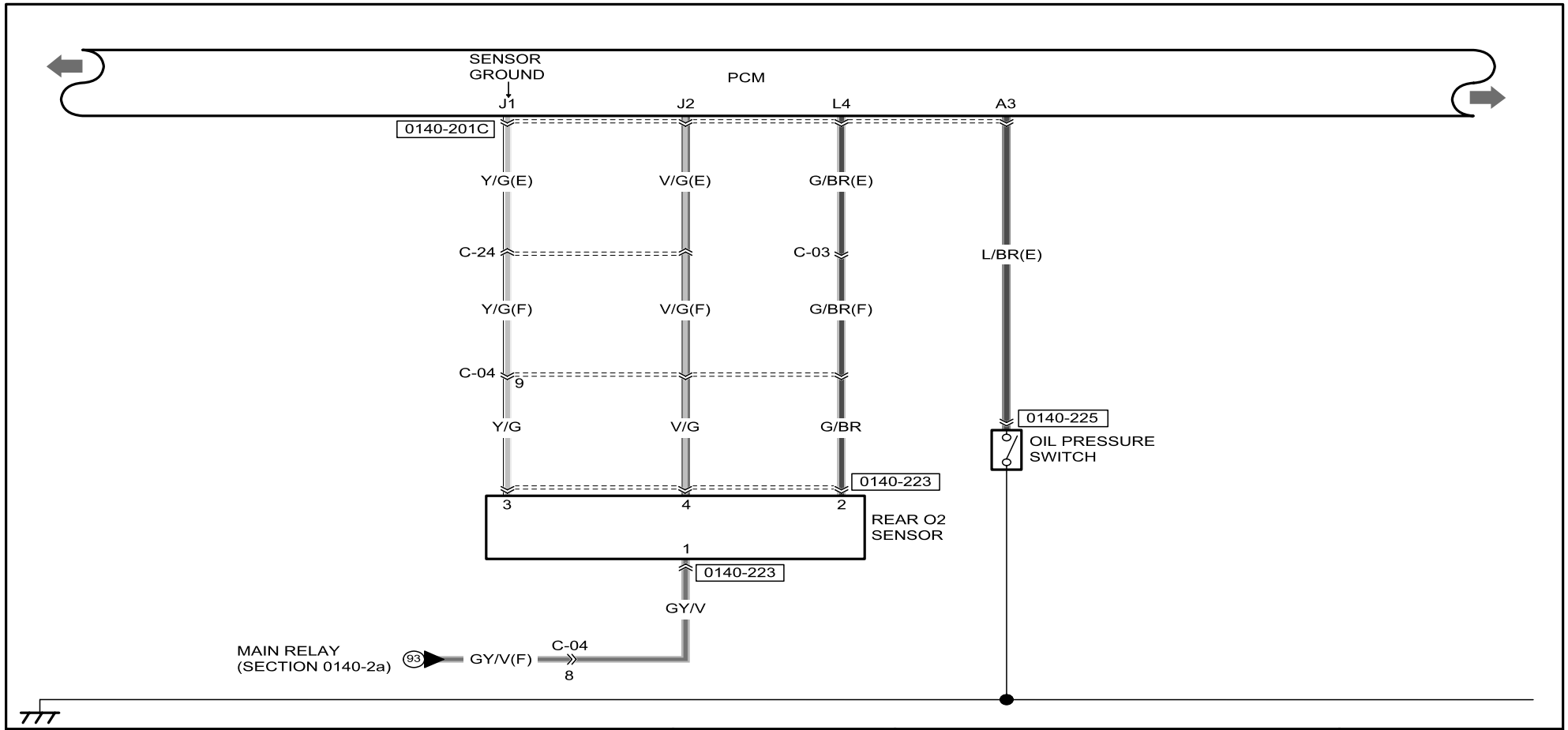

0140-201C
PCM

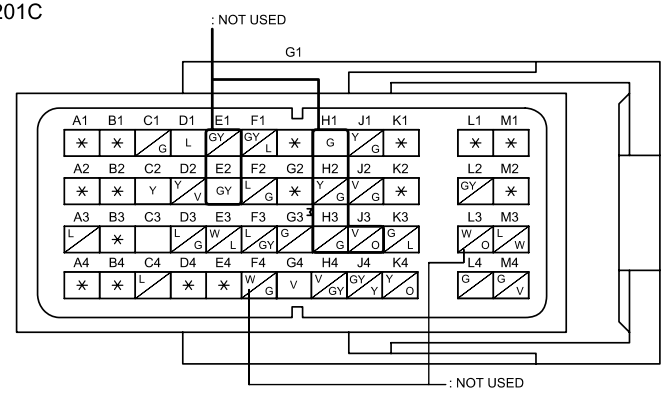

0140-223
REAR O2 SENSOR

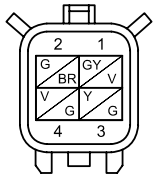

0140-225
OIL PRESSURE SWITCH

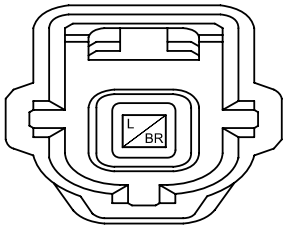

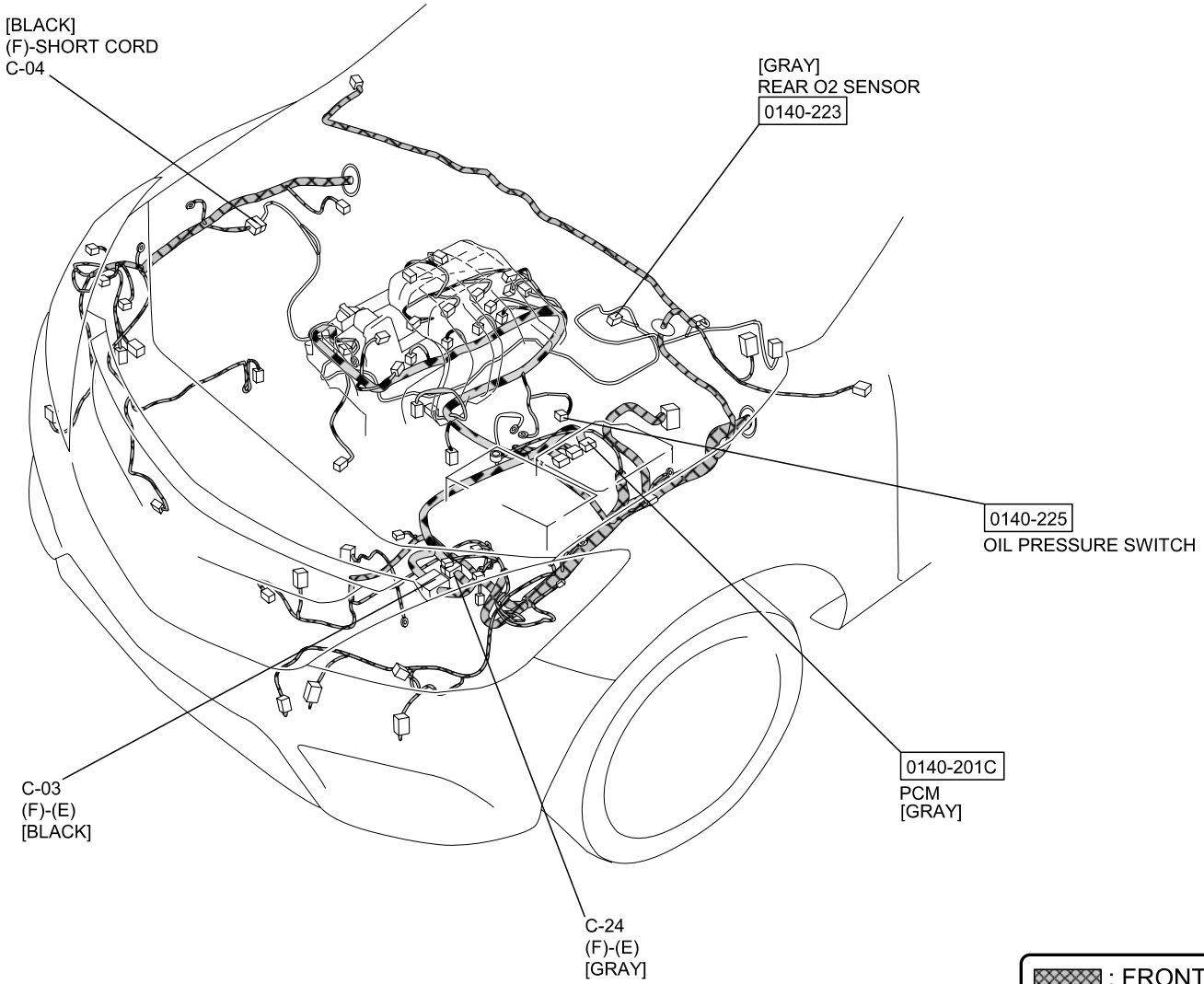
[BLACK]
(F)-SHORT CORD
C-04
[GRAY]
REAR O2 SENSOR
0140-223
0140-225
OIL PRESSURE SWITCH
0140-201C
PCM
[GRAY]
C-03
(F)-(E)
[BLACK]
C-24
(F)-(E)
[GRAY]
: FRONT HARNESS
: ENGINE HARNESS

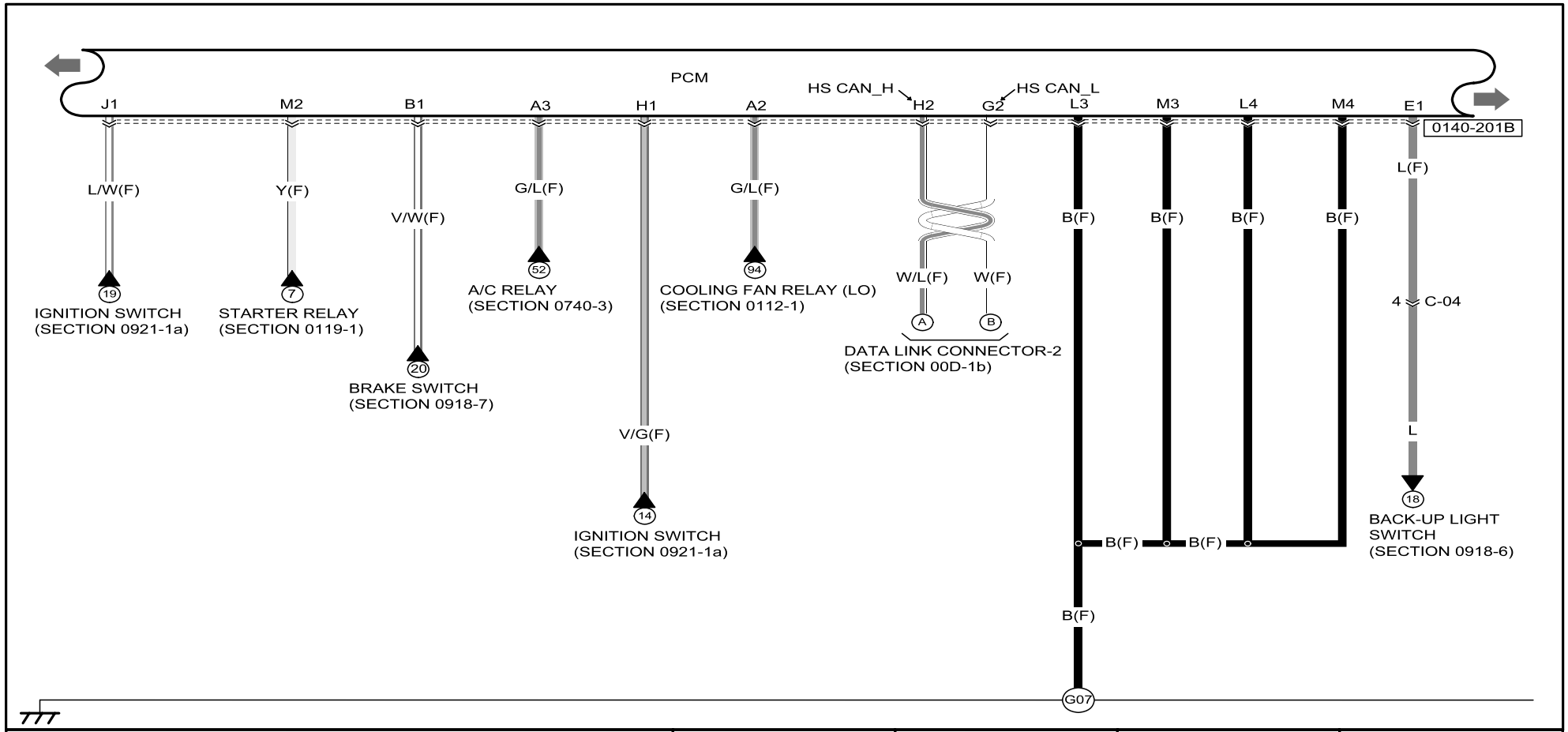
PCM
J1
M2
B1
A3
H1
A2
HS CAN_H
H2
G2
HS CAN_L
L3
M3
L4
M4
E1
0140-201B
L/W(F)
Y(F)
V/W(F)
G/L(F)
G/L(F)
B(F)
B(F)
B(F)
B(F)
L(F)
19
IGNITION SWITCH
(SECTION 0921-1a)
7
STARTER RELAY
(SECTION 0119-1)
20
BRAKE SWITCH
(SECTION 0918-7)
52
A/C RELAY
(SECTION 0740-3)
94
COOLING FAN RELAY (LO)
(SECTION 0112-1)
W/L(F)
W(F)
A
B
DATA LINK CONNECTOR-2
(SECTION 00D-1b)
4
C-04
L
V/G(F)
14
IGNITION SWITCH
(SECTION 0921-1a)
18
BACK-UP LIGHT
SWITCH
(SECTION 0918-6)
B(F)
B(F)
B(F)
B(F)
G07

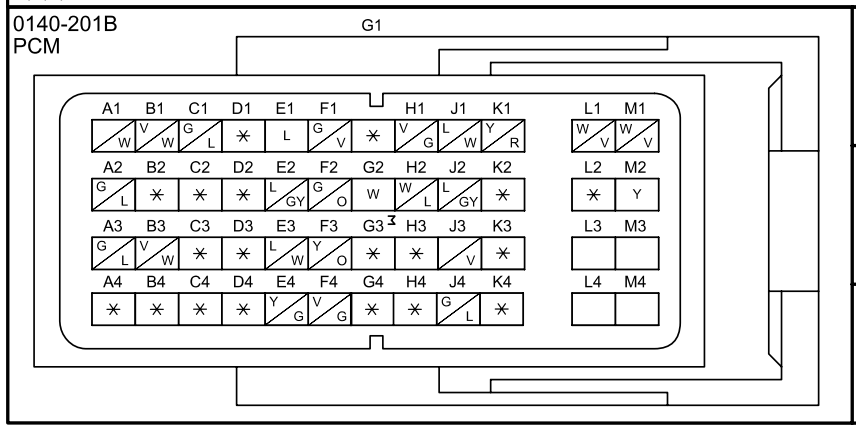
0140-201B
PCM
G1
A1 B1 C1 D1 E1 F1 H1 J1 K1
L1 M1
A2 B2 C2 D2 E2 F2 G2 H2 J2 K2
L2 M2
A3 B3 C3 D3 E3 F3 G3 H3 J3 K3
L3 M3
A4 B4 C4 D4 E4 F4 G4 H4 J4 K4
L4 M4

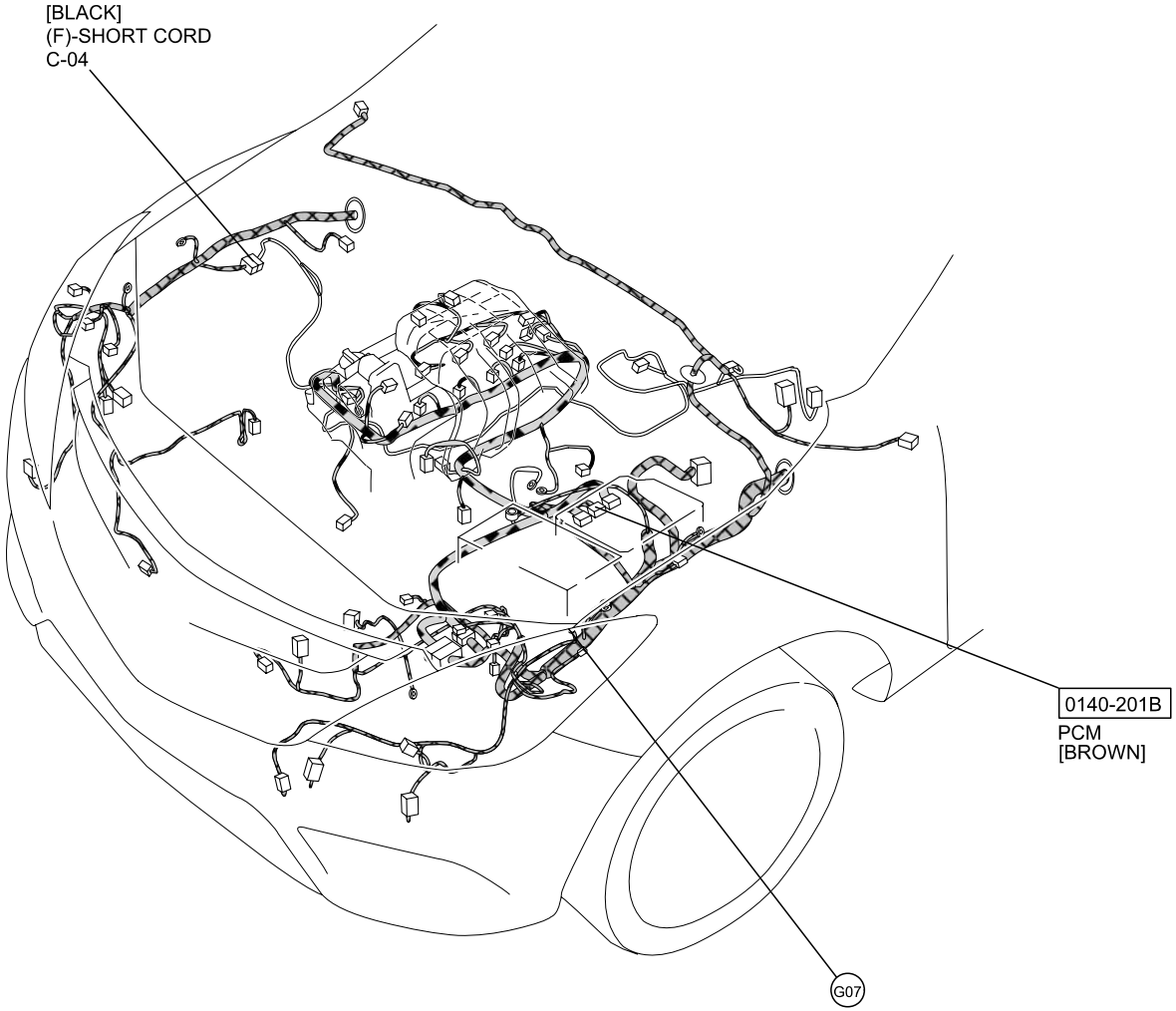

: FRONT HARNESS
: ENGINE HARNESS

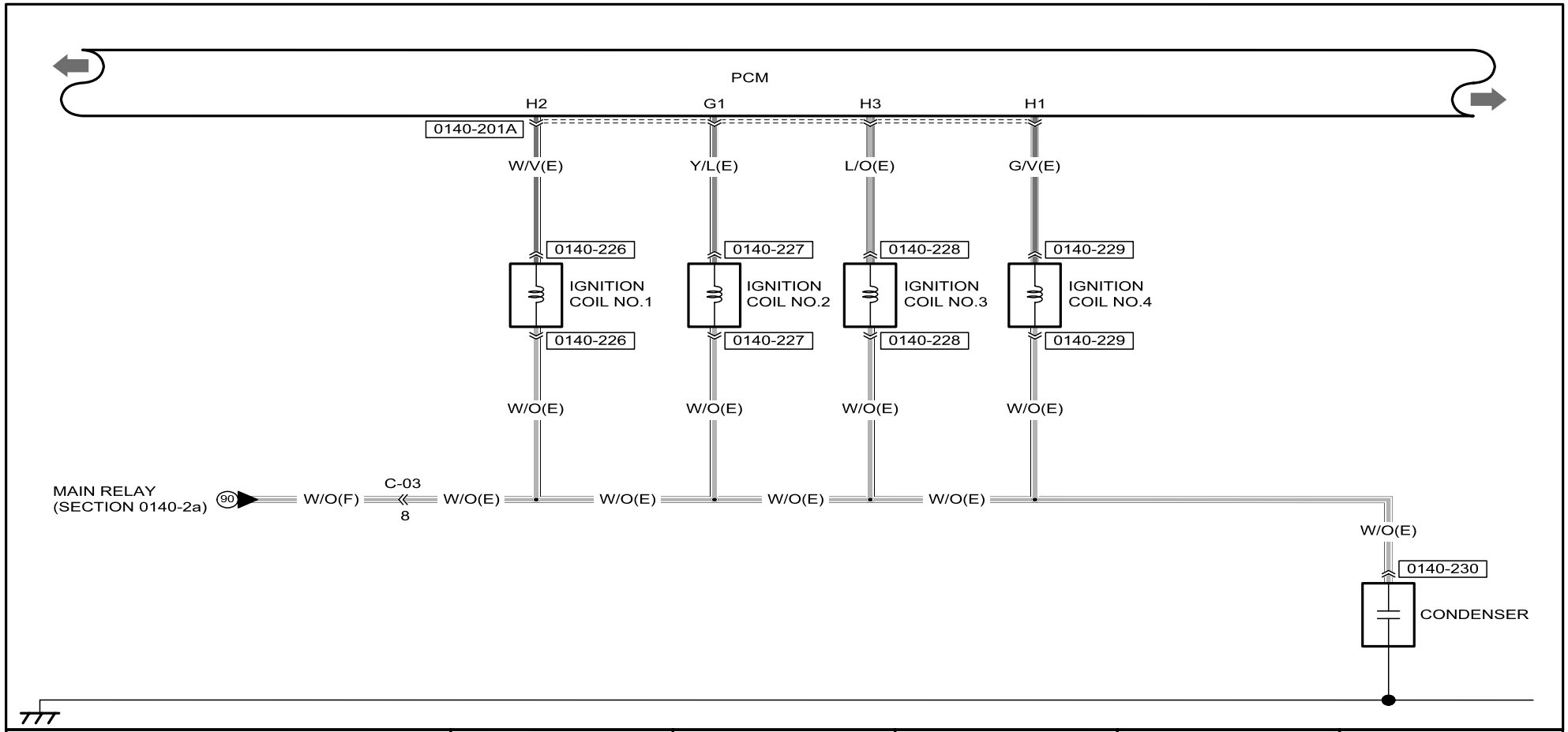

0140-201A PCM	0140-226 IGNITION COIL NO.1	0140-227 IGNITION COIL NO.2	0140-228 IGNITION COIL NO.3	0140-229 IGNITION COIL NO.4	0140-230 CONDENSER
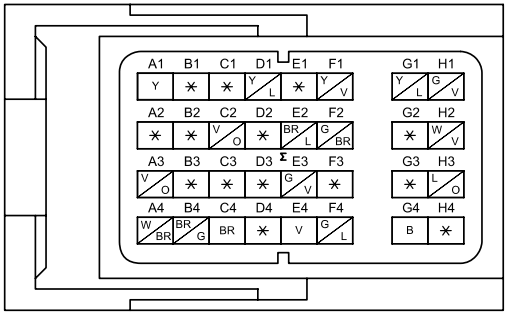	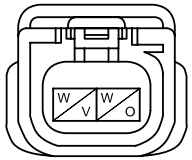	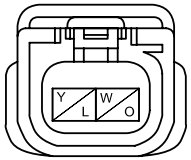	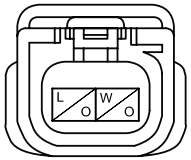	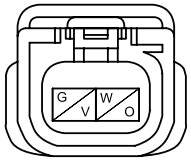	

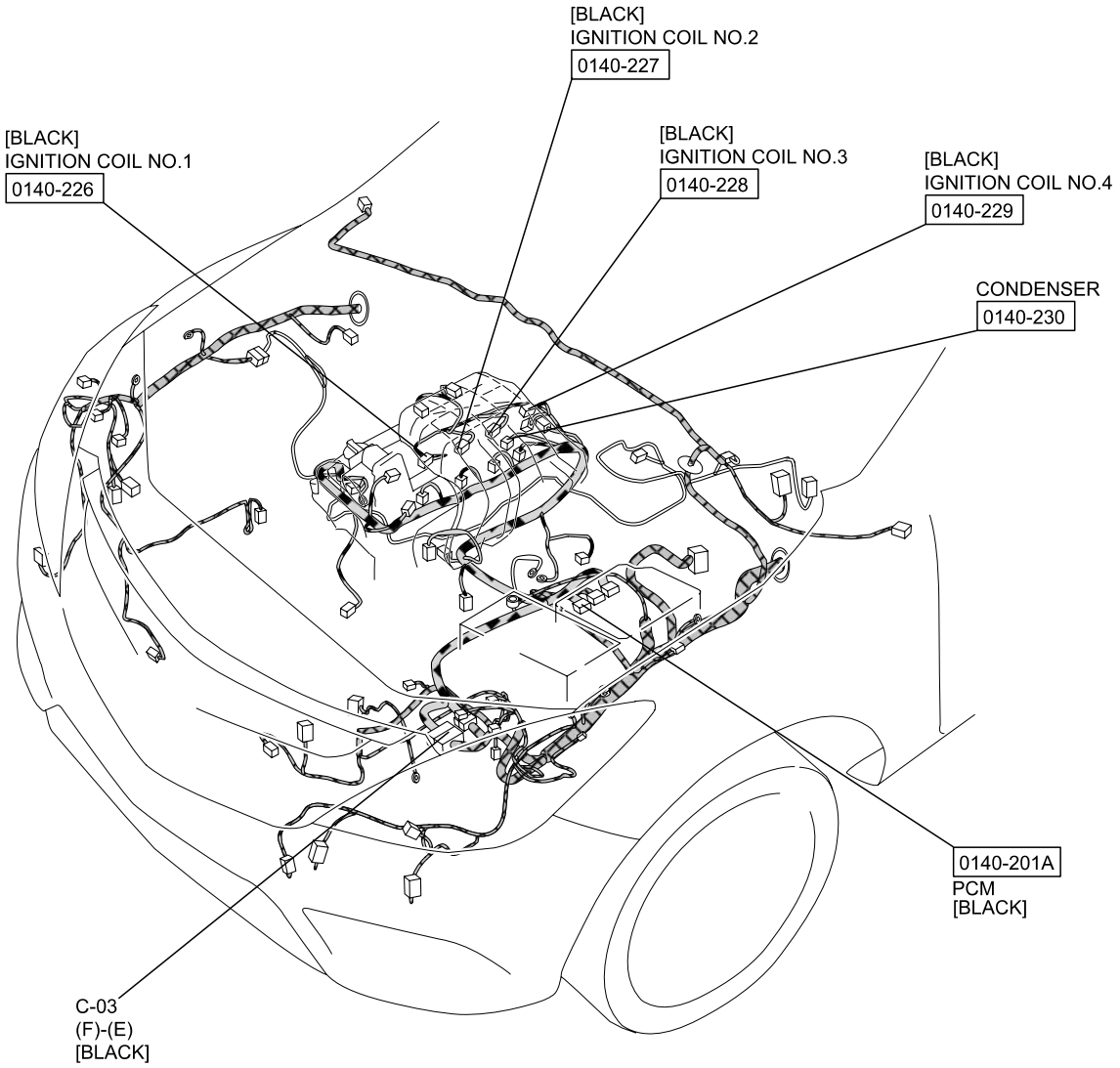

: FRONT HARNESS
: ENGINE HARNESS

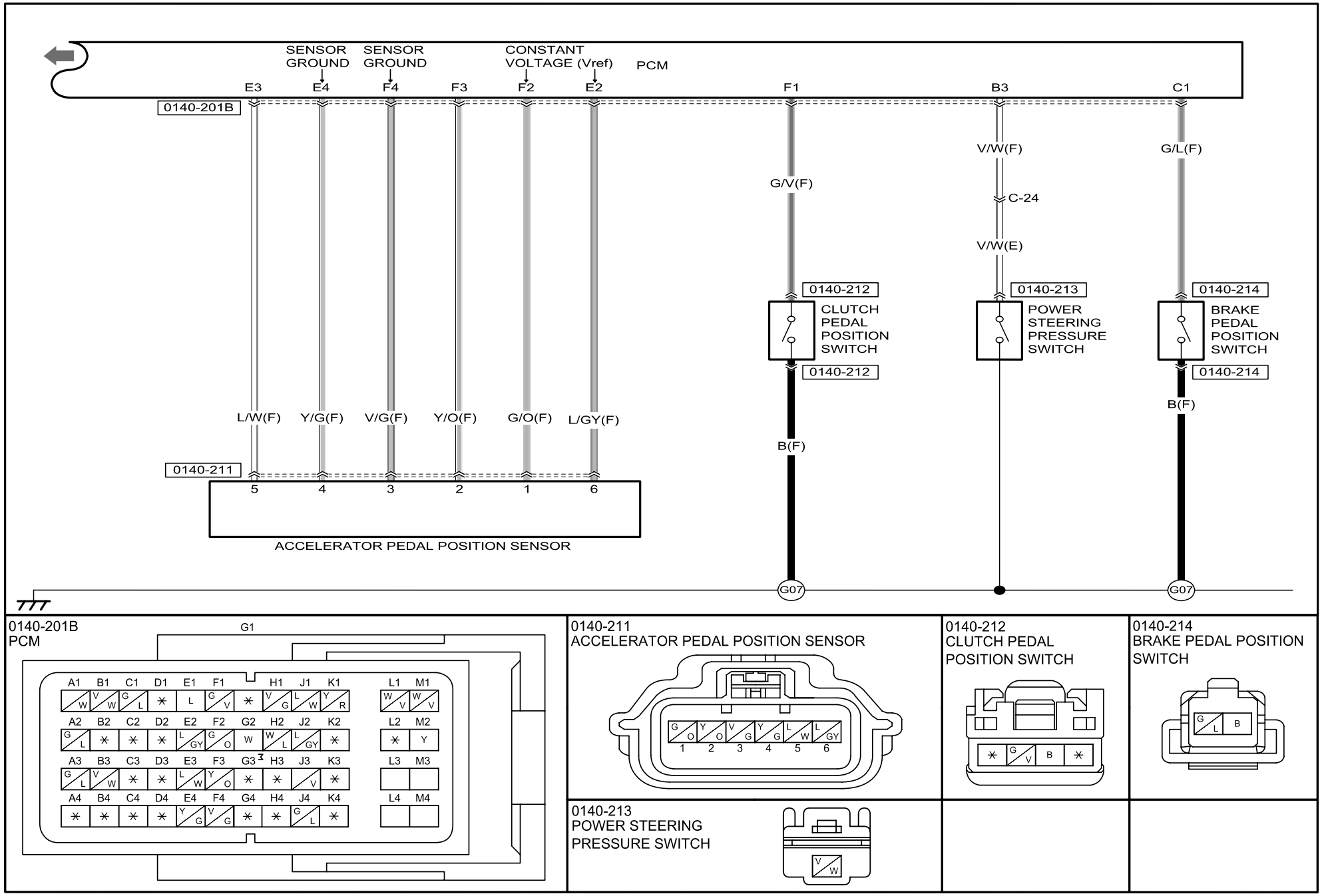
SENSOR GROUND
SENSOR GROUND
CONSTANT VOLTAGE (Vref)
PCM
E3 E4 F4 F3 F2 E2 F1 B3 C1
0140-201B
G/V(F)
V/W(F)
C-24
V/W(E)
G/L(F)
0140-212
CLUTCH PEDAL POSITION SWITCH
0140-213
POWER STEERING PRESSURE SWITCH
0140-214
BRAKE PEDAL POSITION SWITCH
0140-212
0140-214
B(F)
B(F)
L/W(F) Y/G(F) V/G(F) Y/O(F) G/O(F) L/GY(F)
0140-211
5 4 3 2 1 6
ACCELERATOR PEDAL POSITION SENSOR
G07
G07
0140-201B
PCM
G1
0140-211
ACCELERATOR PEDAL POSITION SENSOR
0140-212
CLUTCH PEDAL POSITION SWITCH
0140-214
BRAKE PEDAL POSITION SWITCH
0140-213
POWER STEERING PRESSURE SWITCH

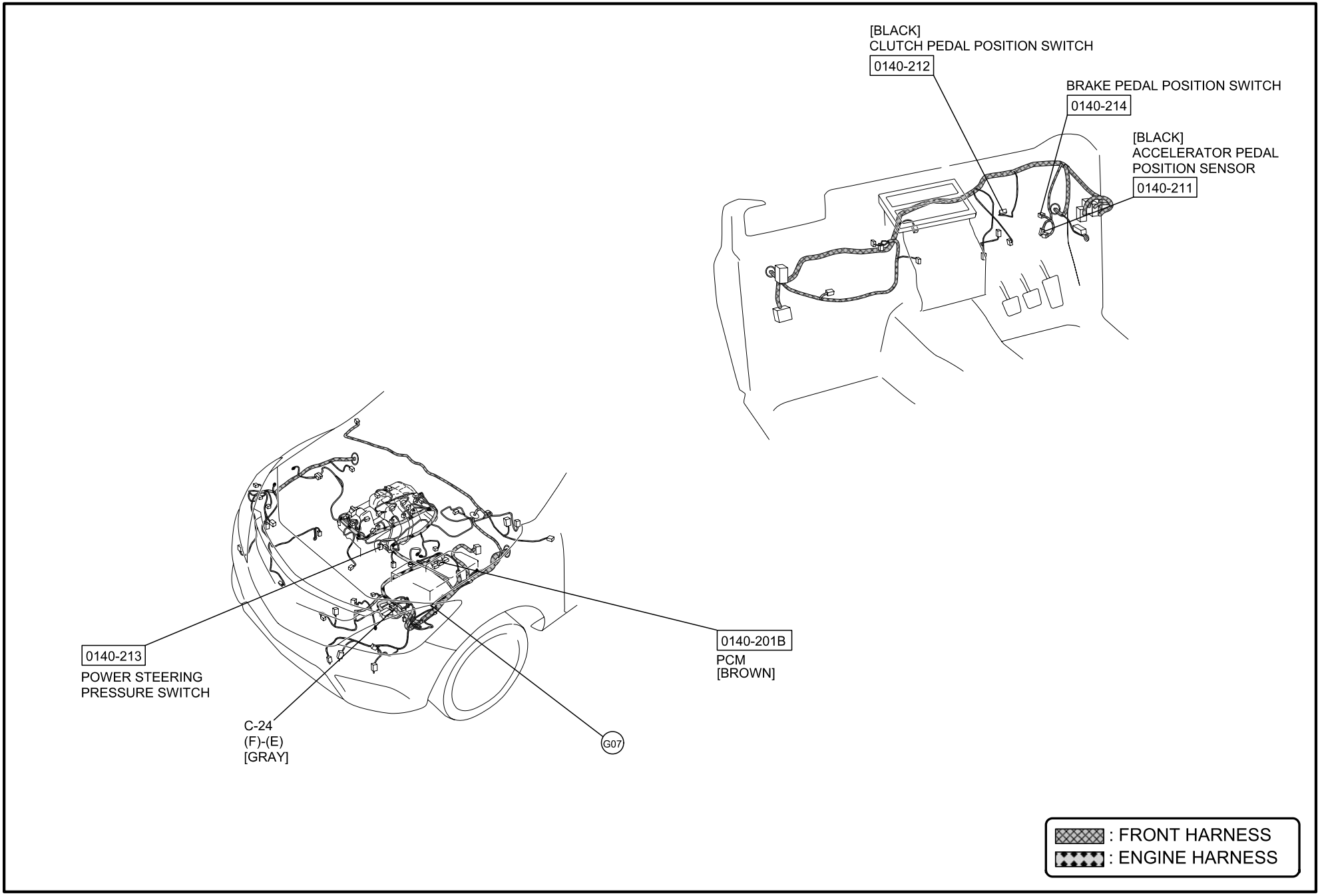
[BLACK]
CLUTCH PEDAL POSITION SWITCH
0140-212
BRAKE PEDAL POSITION SWITCH
0140-214
[BLACK]
ACCELERATOR PEDAL
POSITION SENSOR
0140-211
0140-213
POWER STEERING
PRESSURE SWITCH
C-24
(F)-(E)
[GRAY]
G07
0140-201B
PCM
[BROWN]
: FRONT HARNESS
: ENGINE HARNESS

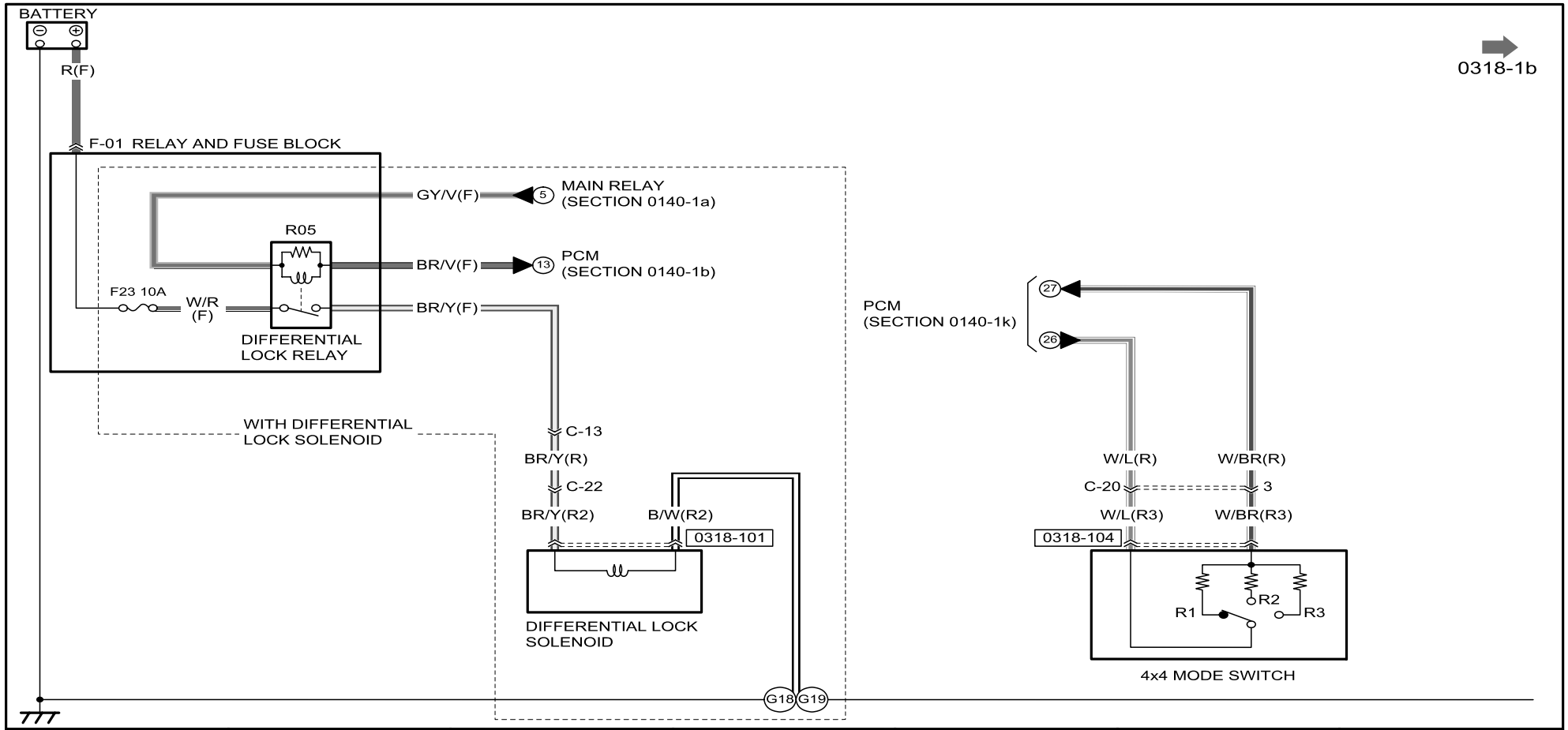

0318-101 DIFFERENTIAL LOCK SOLENOID 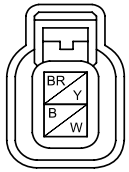 	0318-104 4x4 MODE SWITCH 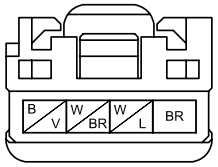 					

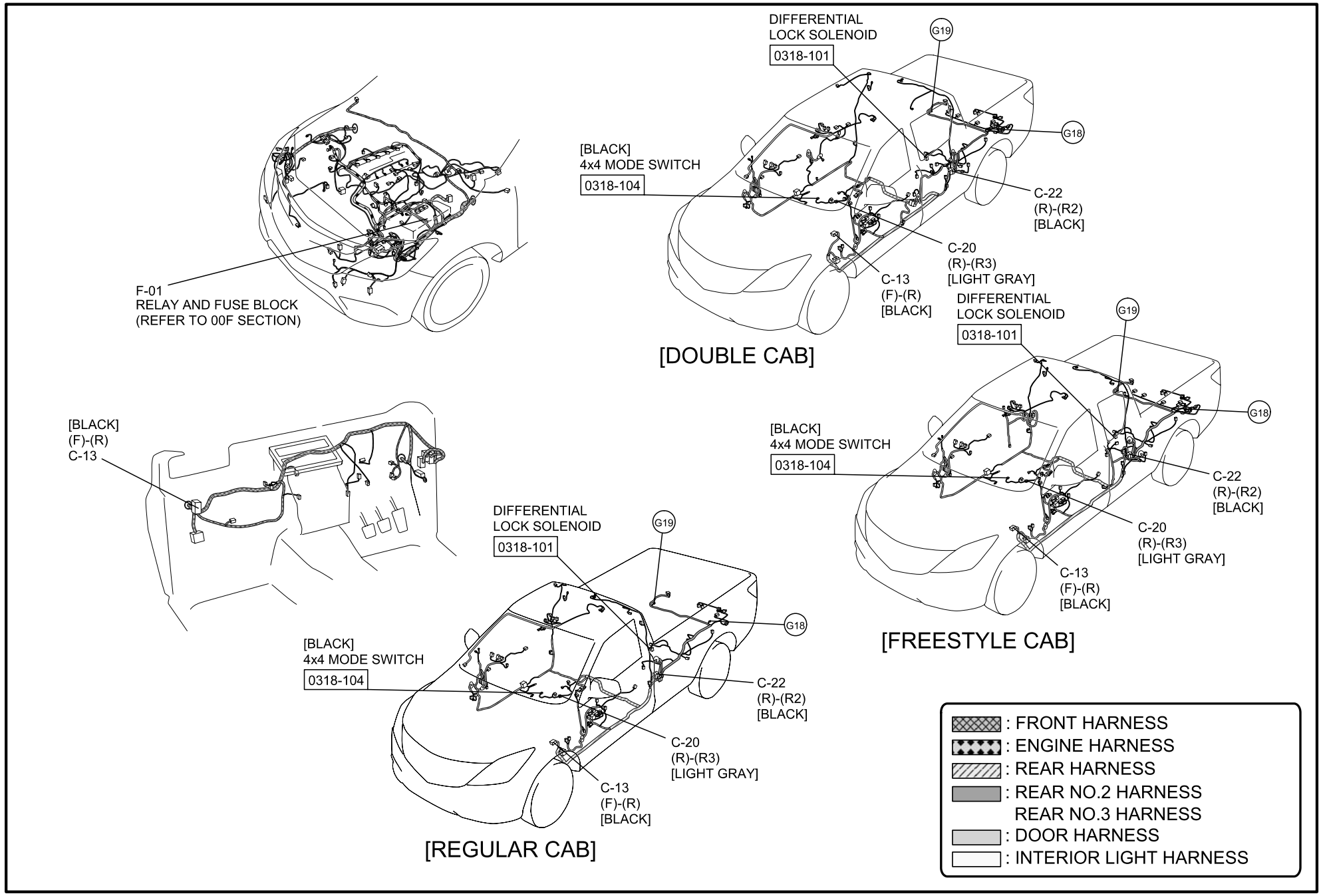
F-01
RELAY AND FUSE BLOCK
(REFER TO 00F SECTION)
DIFFERENTIAL
LOCK SOLENOID
0318-101
G19
G18
[BLACK]
4x4 MODE SWITCH
0318-104
C-22
(R)-(R2)
[BLACK]
C-20
(R)-(R3)
[LIGHT GRAY]
C-13
(F)-(R)
[BLACK]
[DOUBLE CAB]
[BLACK]
(F)-(R)
C-13
[FREESTYLE CAB]
[REGULAR CAB]
: FRONT HARNESS
: ENGINE HARNESS
: REAR HARNESS
: REAR NO.2 HARNESS
REAR NO.3 HARNESS
: DOOR HARNESS
: INTERIOR LIGHT HARNESS

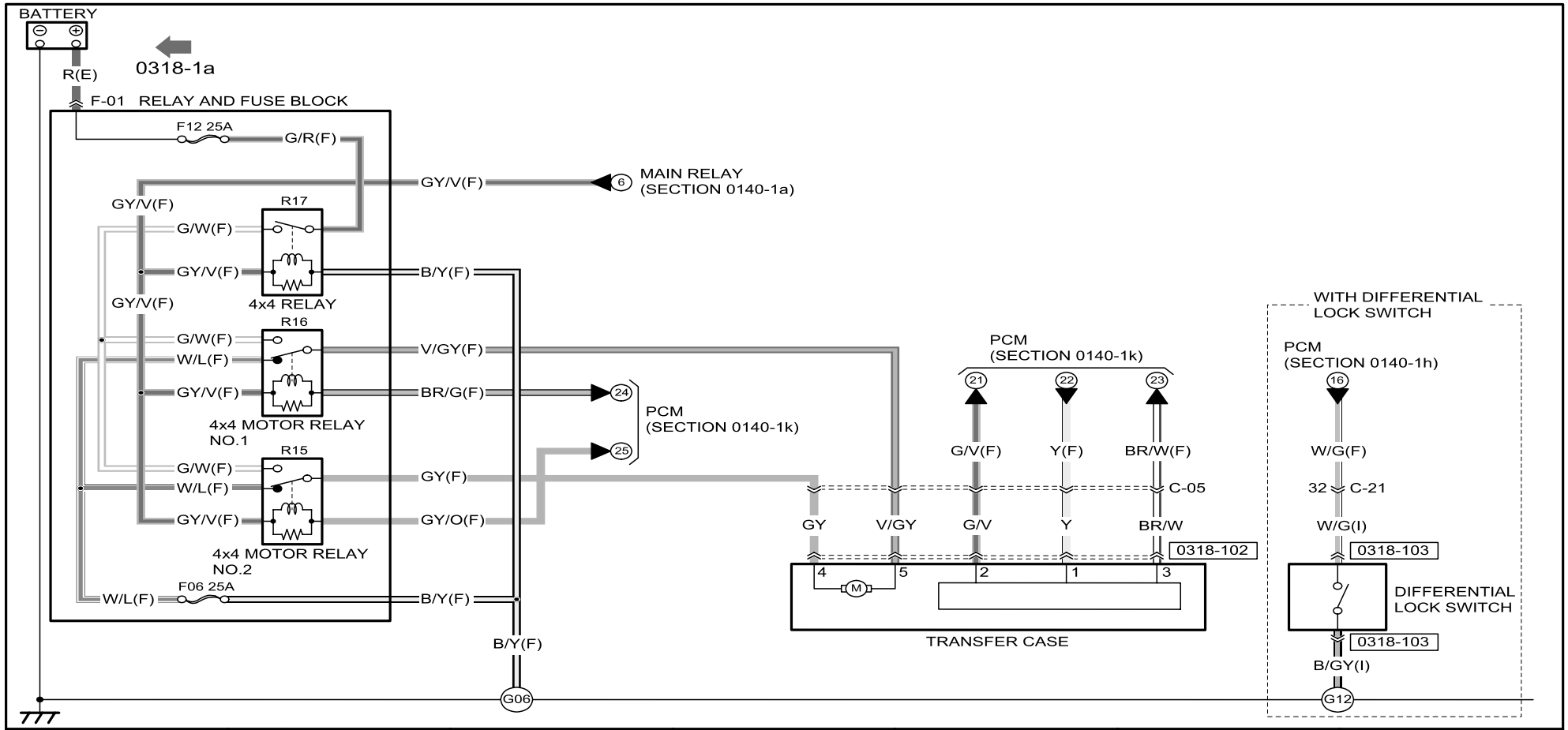

0318-102
TRANSFER CASE

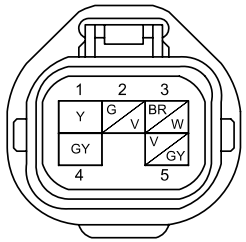

0318-103
DIFFERENTIAL LOCK
SWITCH

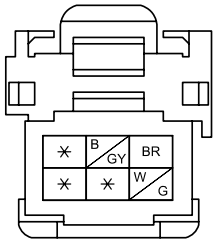

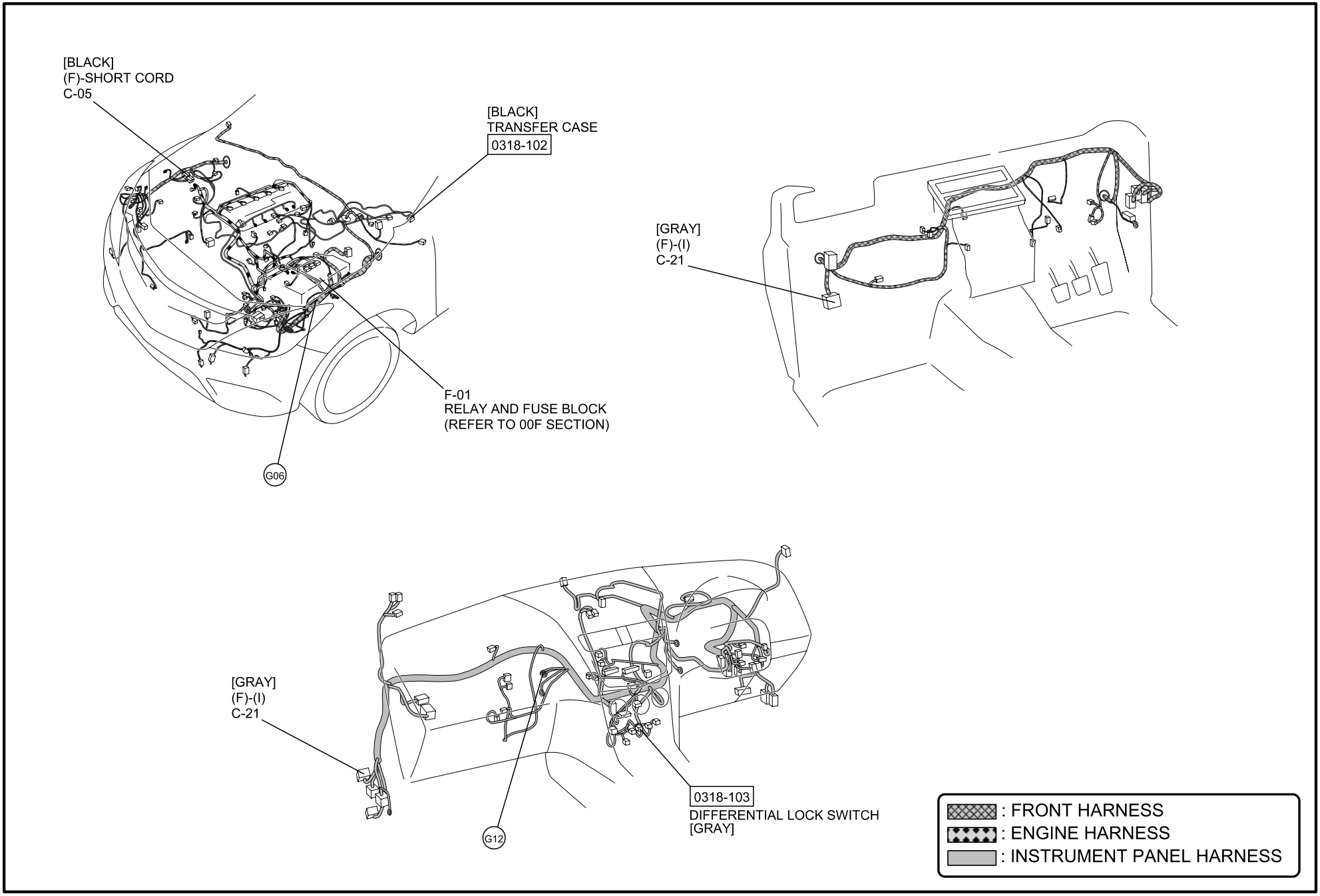
[BLACK]
(F)-SHORT CORD
C-05
[BLACK]
TRANSFER CASE
0318-102
F-01
RELAY AND FUSE BLOCK
(REFER TO 00F SECTION)
G06
[GRAY]
(F)-(I)
C-21
[GRAY]
(F)-(I)
C-21
0318-103
DIFFERENTIAL LOCK SWITCH
[GRAY]
G12
: FRONT HARNESS
: ENGINE HARNESS
: INSTRUMENT PANEL HARNESS

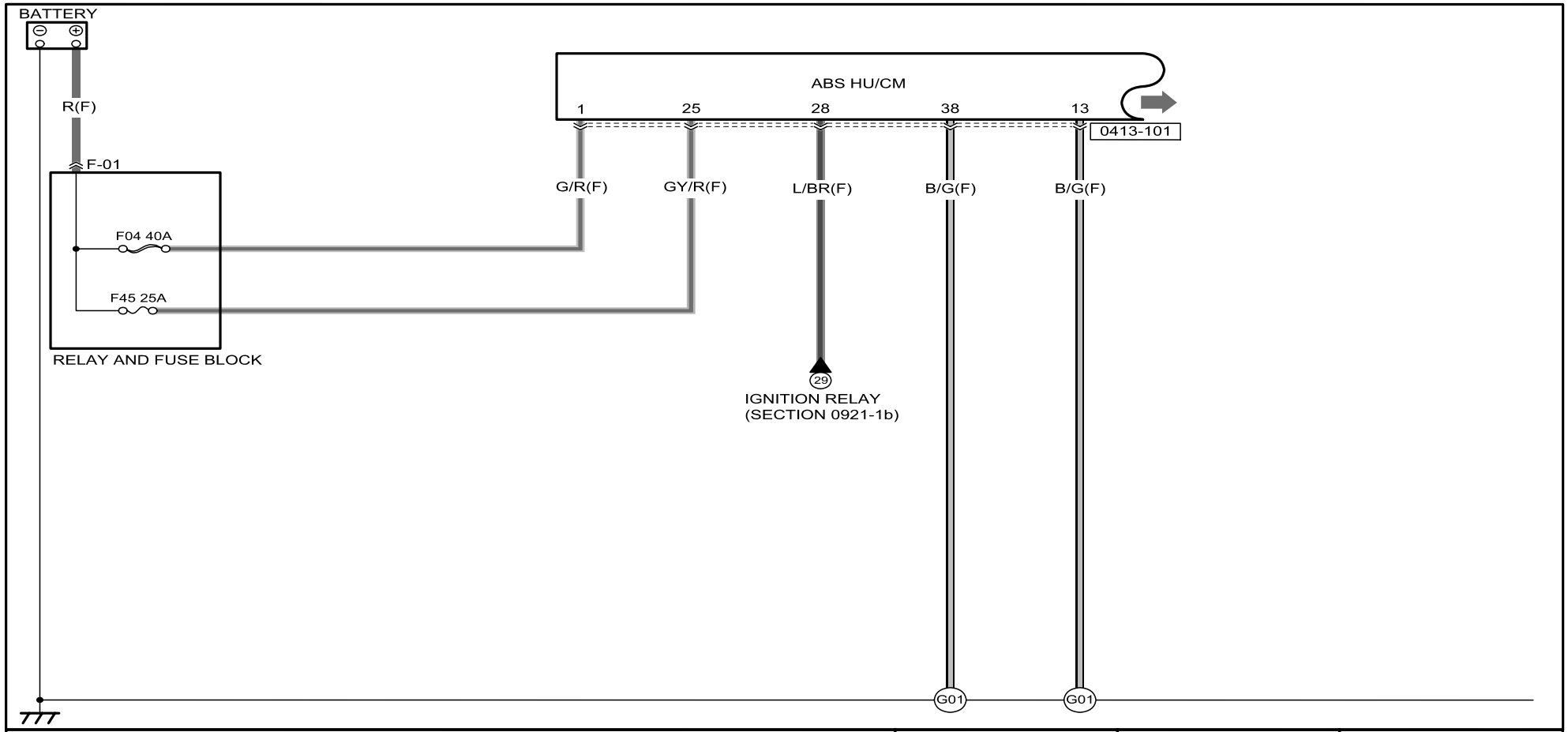

0413-101
ABS HU/CM

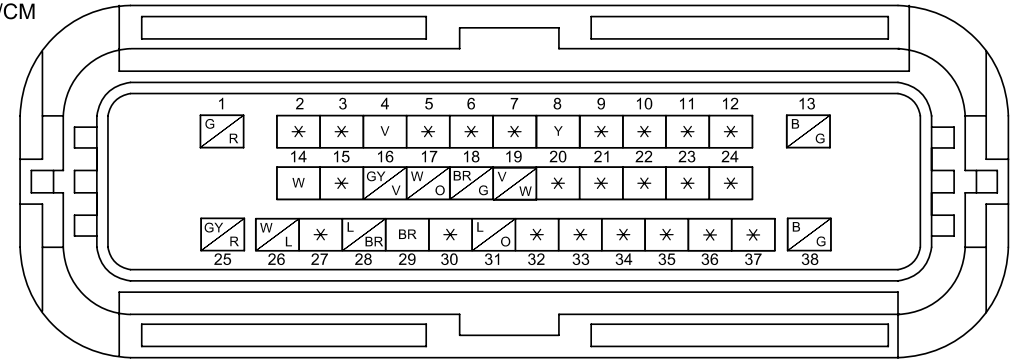

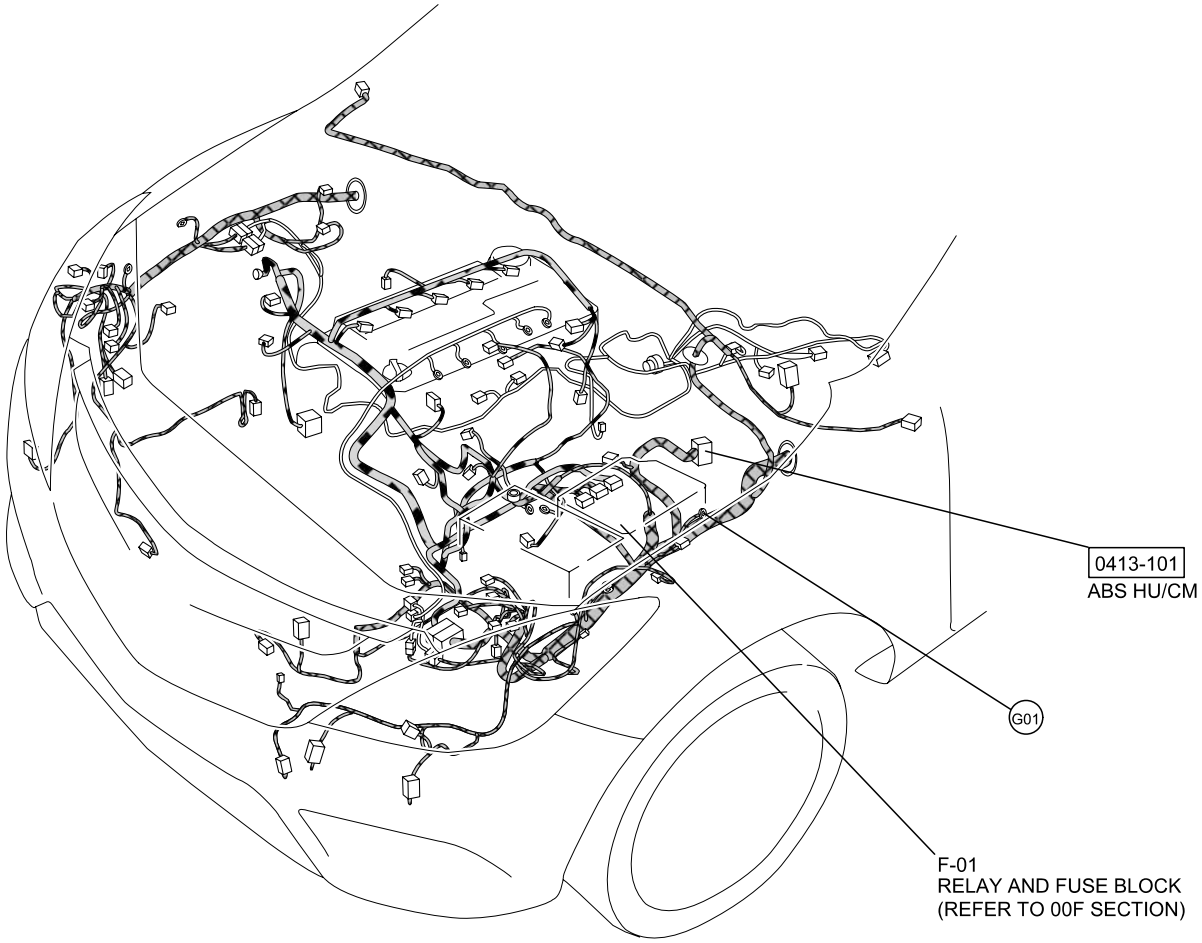

: FRONT HARNESS
: ENGINE HARNESS

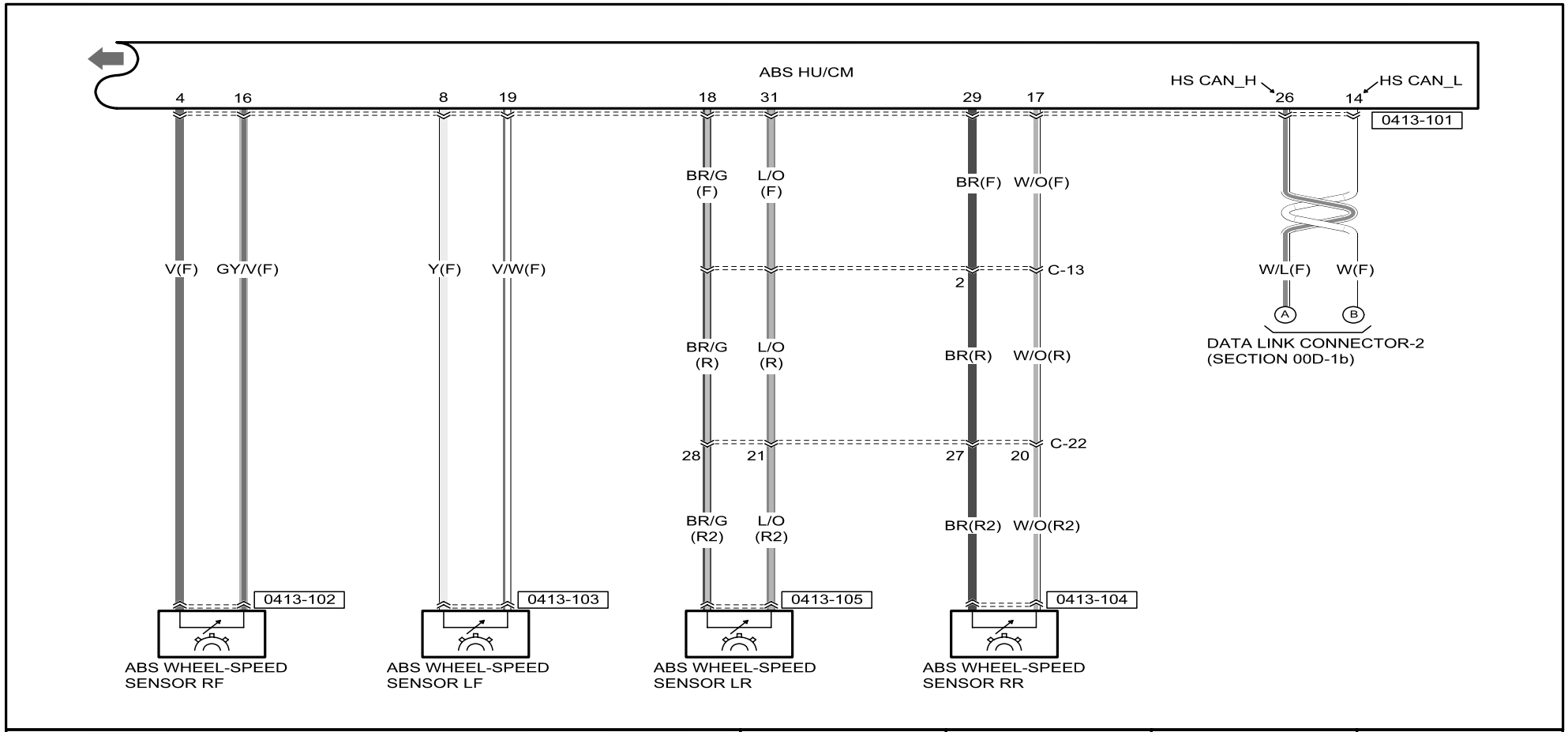

0413-101
ABS HU/CM

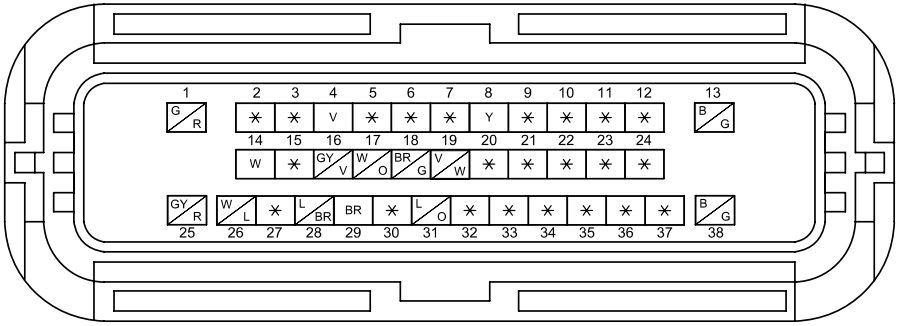

0413-102
ABS WHEEL-SPEED SENSOR RF

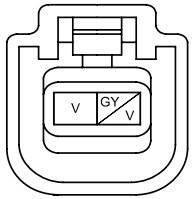

0413-103
ABS WHEEL-SPEED SENSOR LF

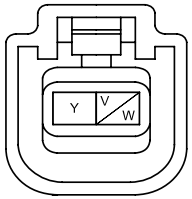

0413-104
ABS WHEEL-SPEED SENSOR RR

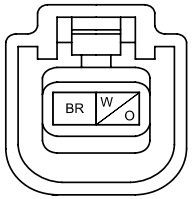

0413-105
ABS WHEEL-SPEED SENSOR LR

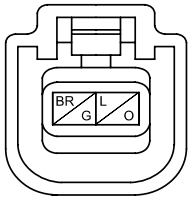

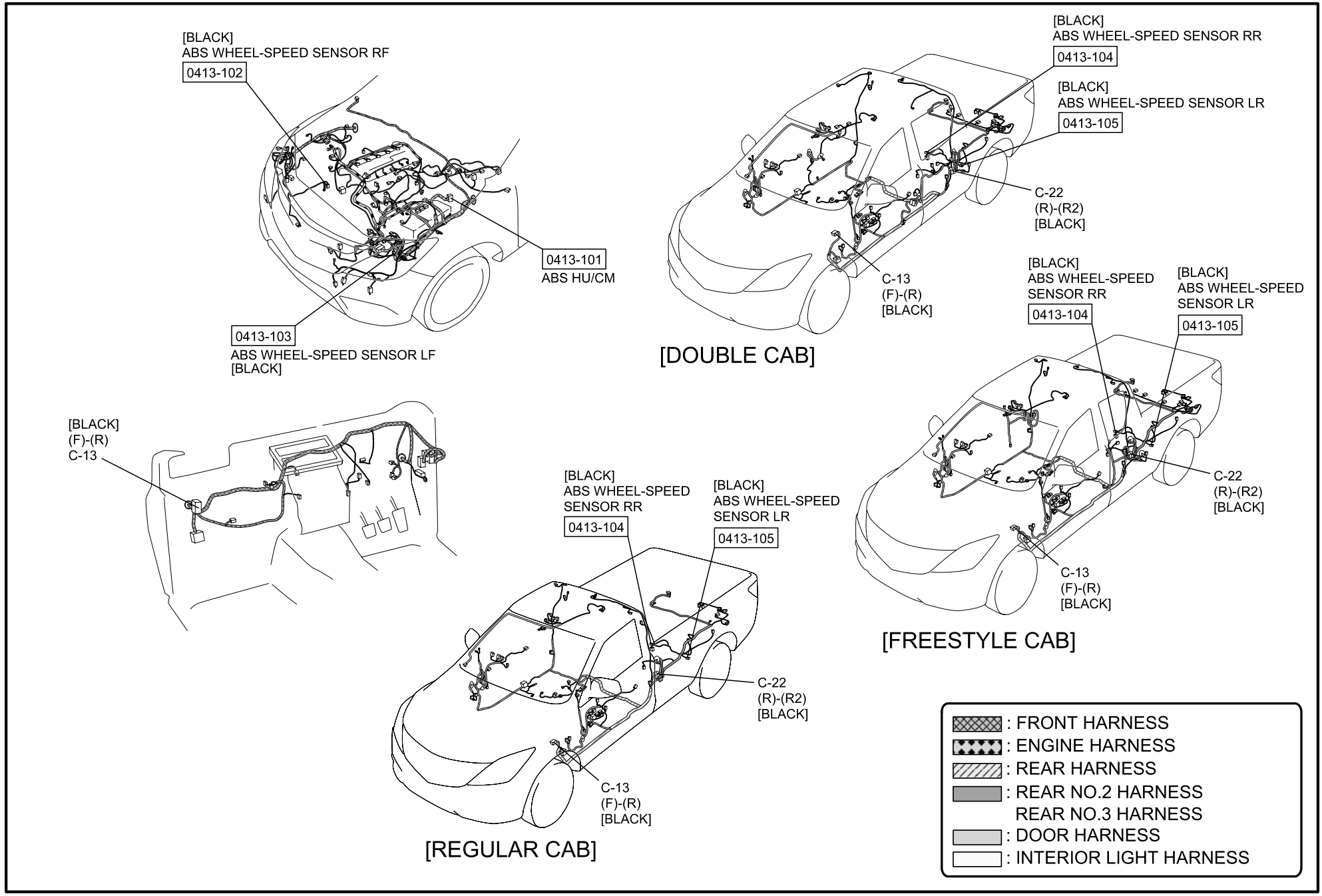
[BLACK]
ABS WHEEL-SPEED SENSOR RF
0413-102
0413-101
ABS HU/CM
0413-103
ABS WHEEL-SPEED SENSOR LF
[BLACK]
[BLACK]
ABS WHEEL-SPEED SENSOR RR
0413-104
[BLACK]
ABS WHEEL-SPEED SENSOR LR
0413-105
C-22
(R)-(R2)
[BLACK]
C-13
(F)-(R)
[BLACK]
[DOUBLE CAB]
[BLACK]
(F)-(R)
C-13
[BLACK]
ABS WHEEL-SPEED
SENSOR RR
0413-104
[BLACK]
ABS WHEEL-SPEED
SENSOR LR
0413-105
C-22
(R)-(R2)
[BLACK]
C-13
(F)-(R)
[BLACK]
[FREESTYLE CAB]
[BLACK]
ABS WHEEL-SPEED
SENSOR RR
0413-104
[BLACK]
ABS WHEEL-SPEED
SENSOR LR
0413-105
C-22
(R)-(R2)
[BLACK]
C-13
(F)-(R)
[BLACK]
[REGULAR CAB]
: FRONT HARNESS
: ENGINE HARNESS
: REAR HARNESS
: REAR NO.2 HARNESS
REAR NO.3 HARNESS
: DOOR HARNESS
: INTERIOR LIGHT HARNESS

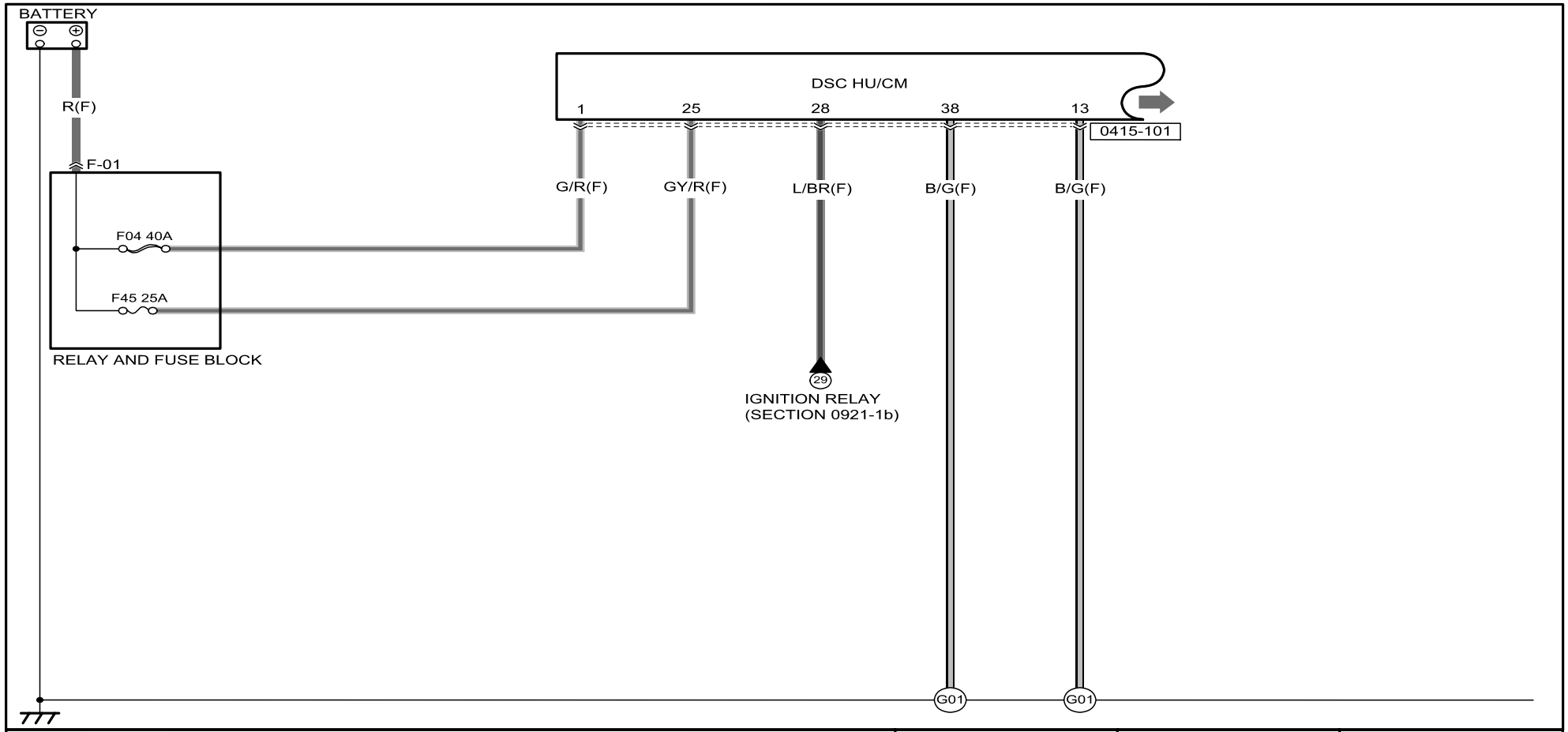

0415-101
DSC HU/CM

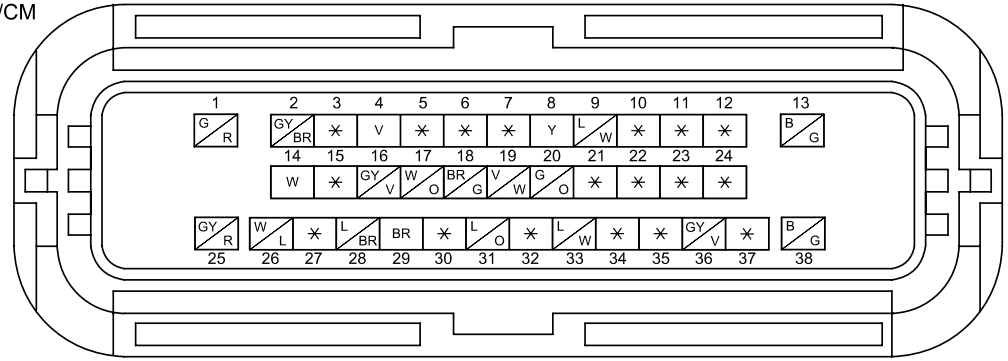

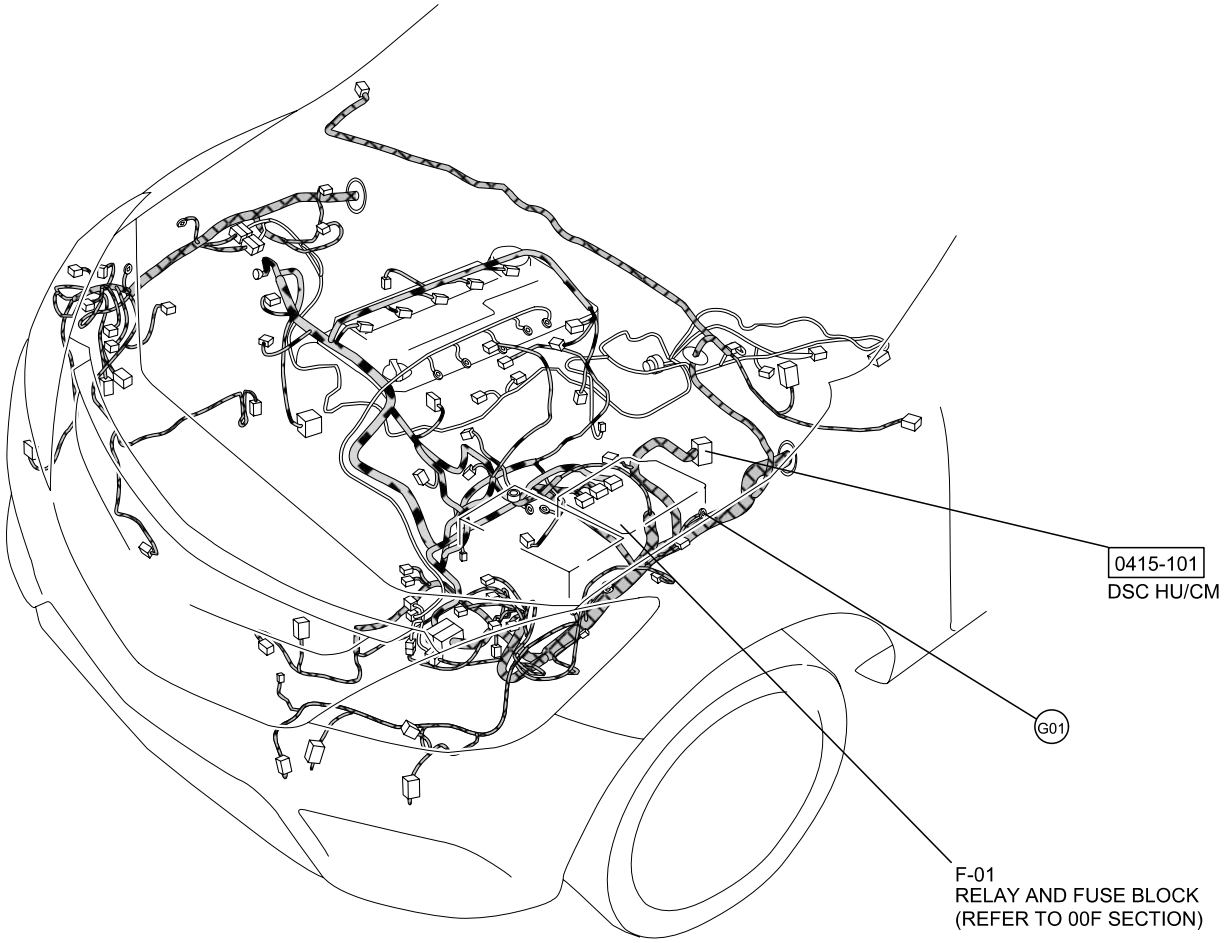

: FRONT HARNESS
: ENGINE HARNESS

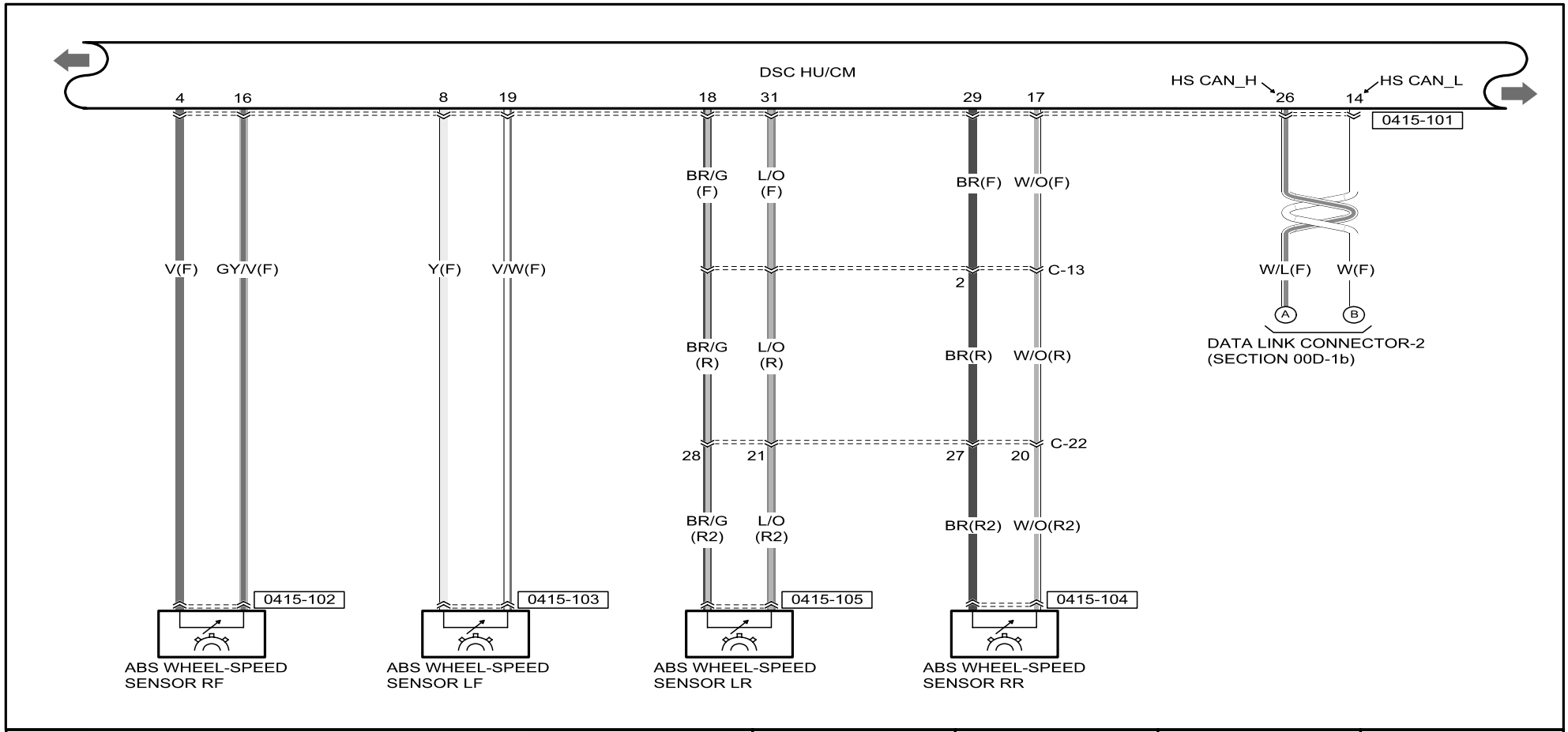

0415-101
DSC HU/CM

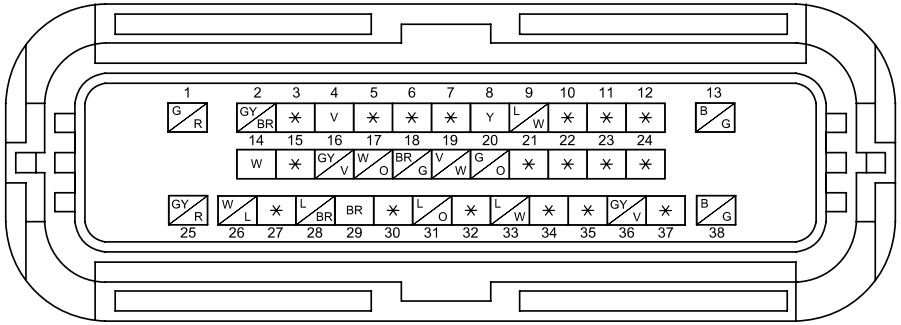

0415-102
ABS WHEEL-SPEED SENSOR RF

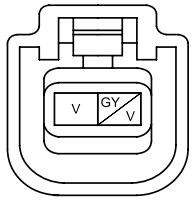

0415-103
ABS WHEEL-SPEED SENSOR LF

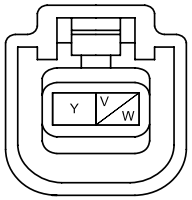

0415-104
ABS WHEEL-SPEED SENSOR RR

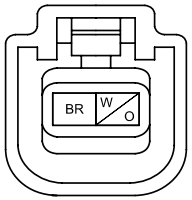

0415-105
ABS WHEEL-SPEED SENSOR LR

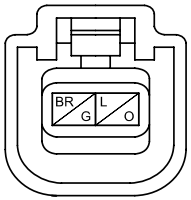

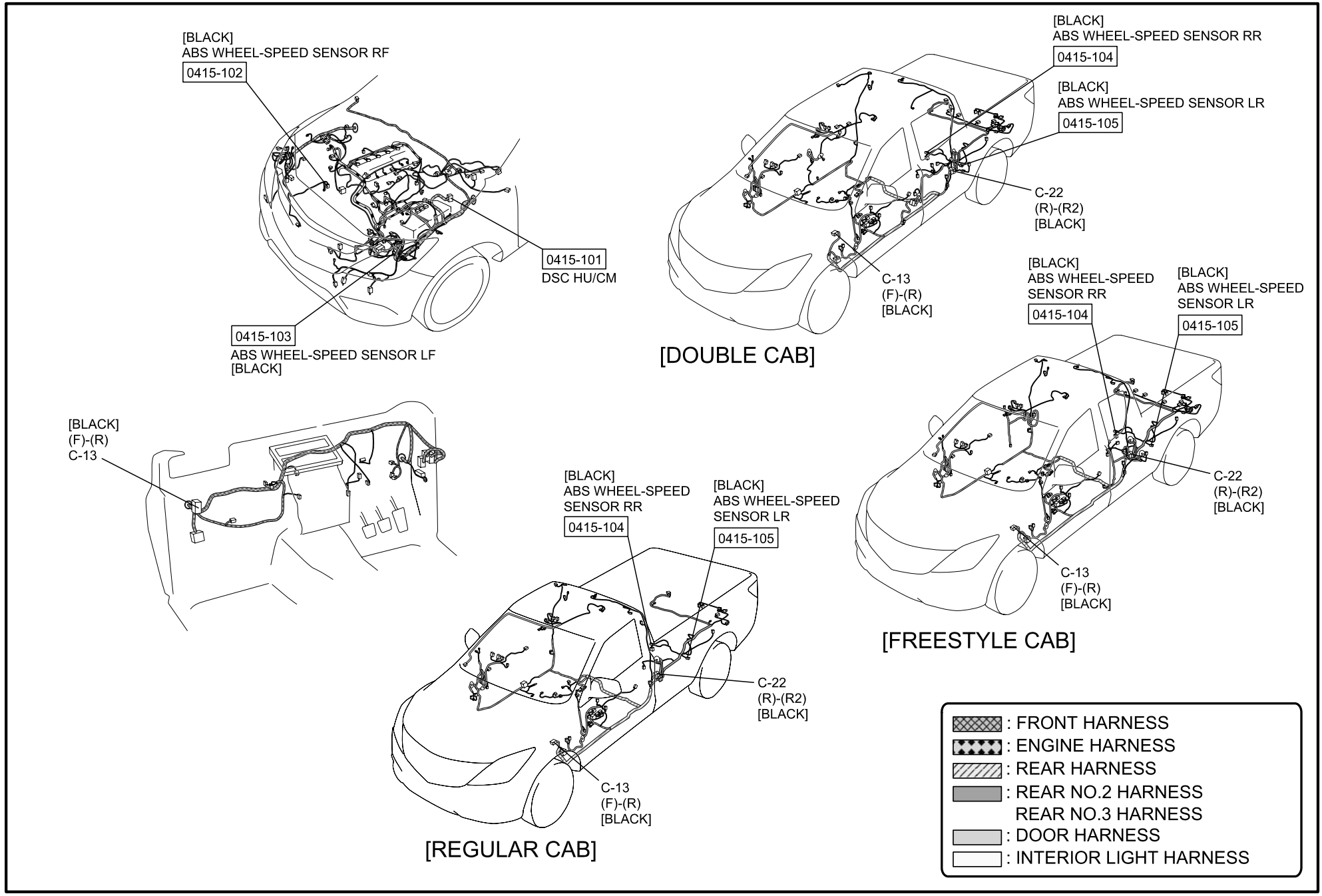
[BLACK]
ABS WHEEL-SPEED SENSOR RF
0415-102
0415-101
DSC HU/CM
0415-103
ABS WHEEL-SPEED SENSOR LF
[BLACK]
[BLACK]
ABS WHEEL-SPEED SENSOR RR
0415-104
[BLACK]
ABS WHEEL-SPEED SENSOR LR
0415-105
C-22
(R)-(R2)
[BLACK]
C-13
(F)-(R)
[BLACK]
[DOUBLE CAB]
[BLACK]
(F)-(R)
C-13
[BLACK]
ABS WHEEL-SPEED
SENSOR RR
0415-104
[BLACK]
ABS WHEEL-SPEED
SENSOR LR
0415-105
C-22
(R)-(R2)
[BLACK]
C-13
(F)-(R)
[BLACK]
[FREESTYLE CAB]
[BLACK]
ABS WHEEL-SPEED
SENSOR RR
0415-104
[BLACK]
ABS WHEEL-SPEED
SENSOR LR
0415-105
C-22
(R)-(R2)
[BLACK]
C-13
(F)-(R)
[BLACK]
[REGULAR CAB]
: FRONT HARNESS
: ENGINE HARNESS
: REAR HARNESS
: REAR NO.2 HARNESS
REAR NO.3 HARNESS
: DOOR HARNESS
: INTERIOR LIGHT HARNESS

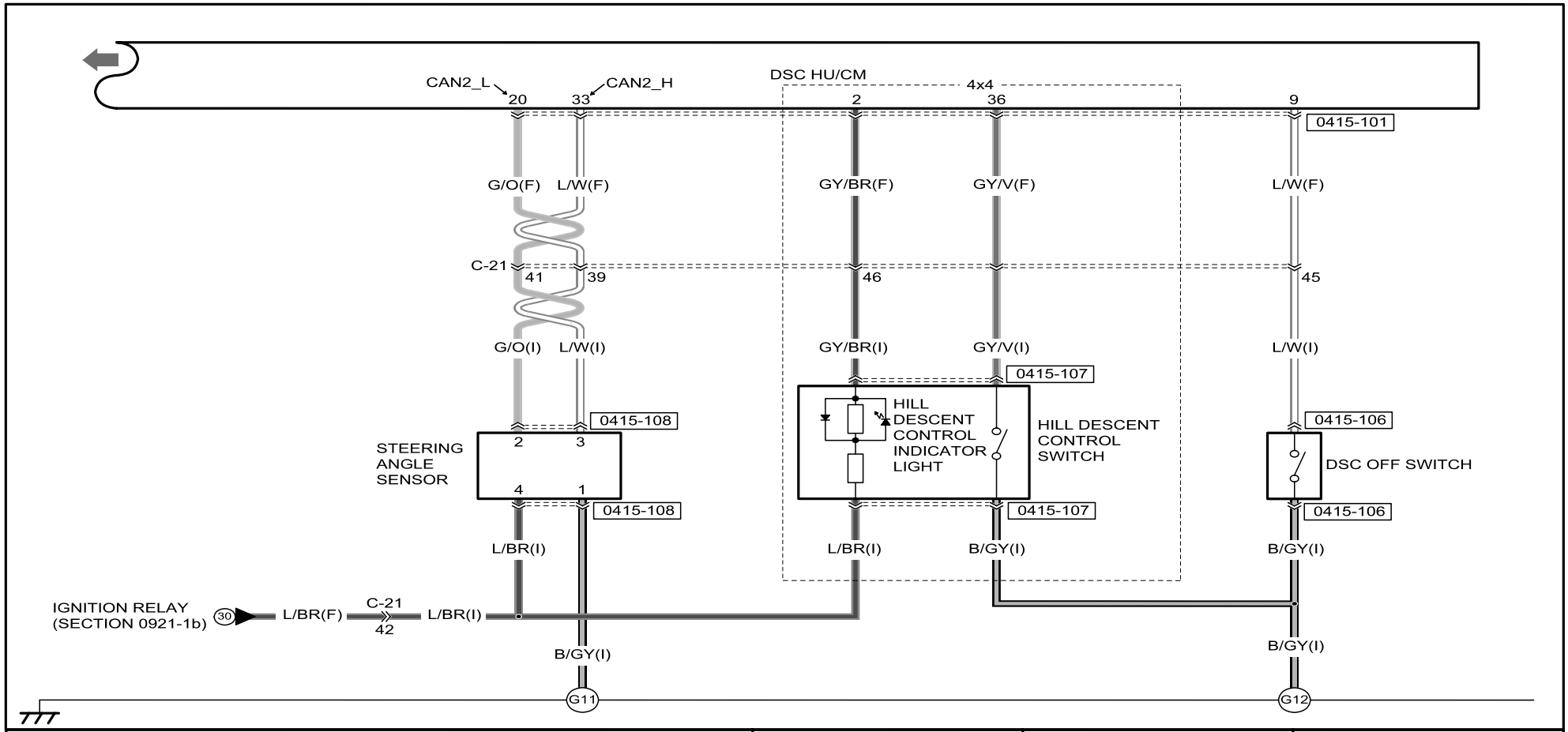

0415-101
DSC HU/CM

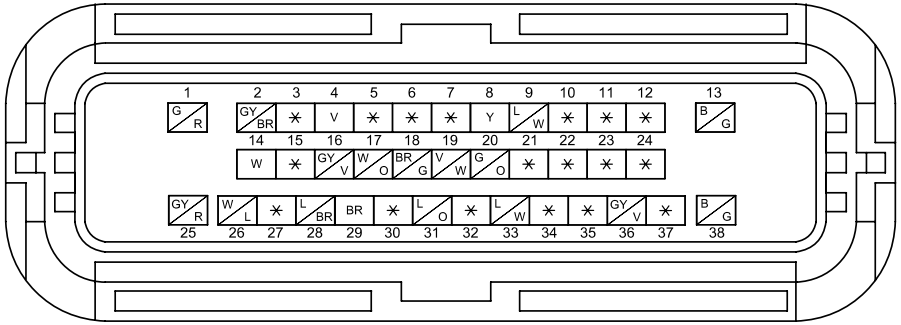

0415-106
DSC OFF SWITCH

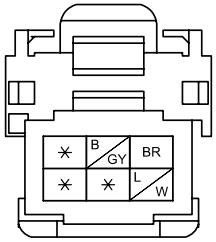

0415-107
HILL DESCENT CONTROL SWITCH

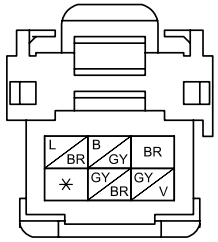

0415-108
STEERING ANGLE SENSOR

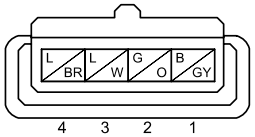

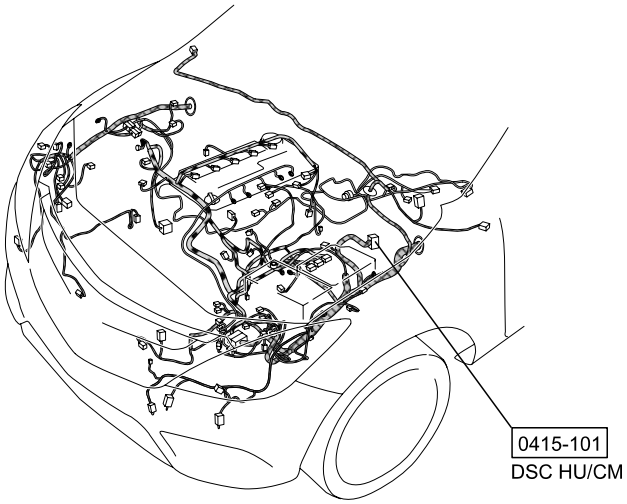
0415-101
DSC HU/CM

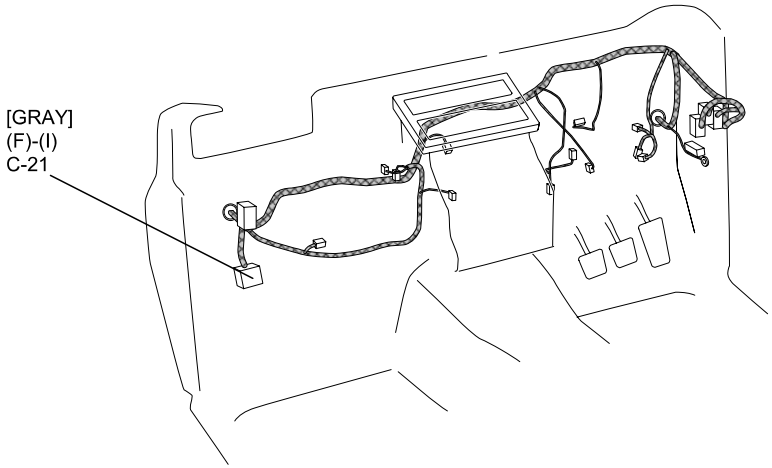
[GRAY]
(F)-(I)
C-21

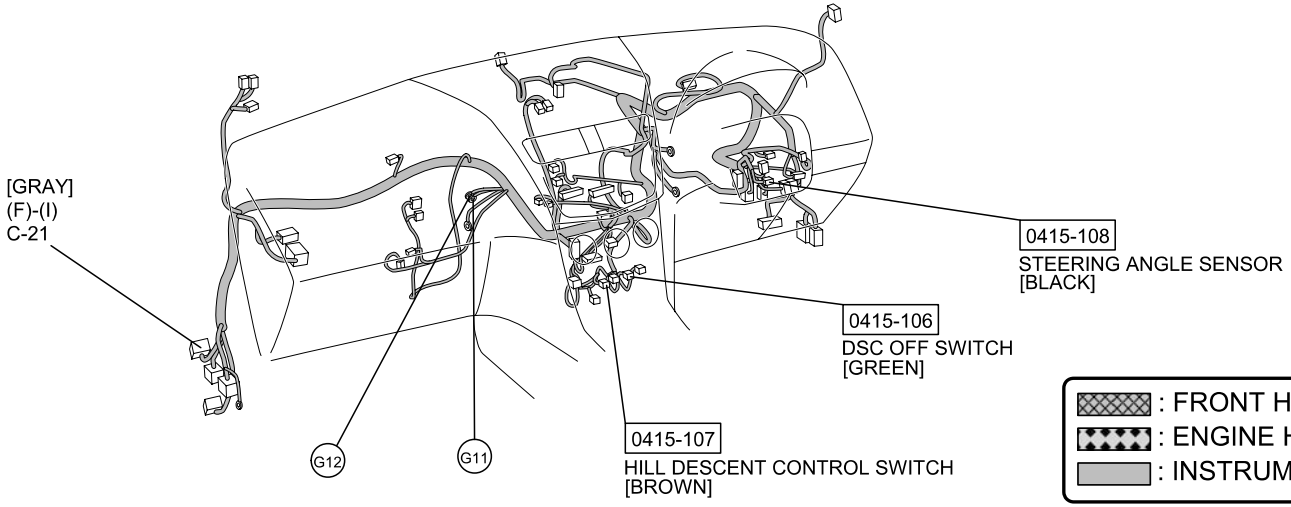
[GRAY]
(F)-(I)
C-21
0415-108
STEERING ANGLE SENSOR
[BLACK]
0415-106
DSC OFF SWITCH
[GREEN]
0415-107
HILL DESCENT CONTROL SWITCH
[BROWN]
G12
G11
: FRONT HARNESS
: ENGINE HARNESS
: INSTRUMENT PANEL HARNESS

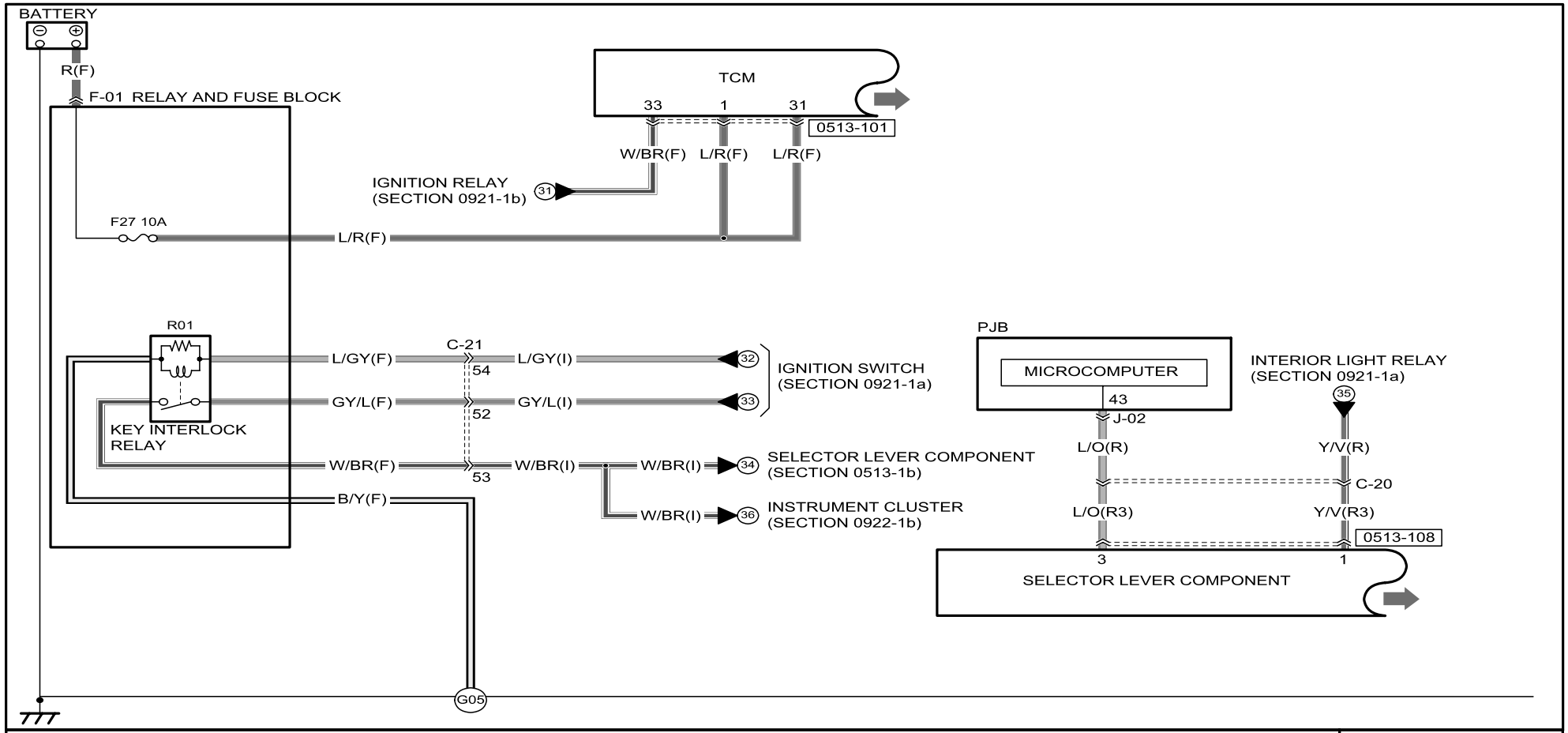

0513-101
TCM

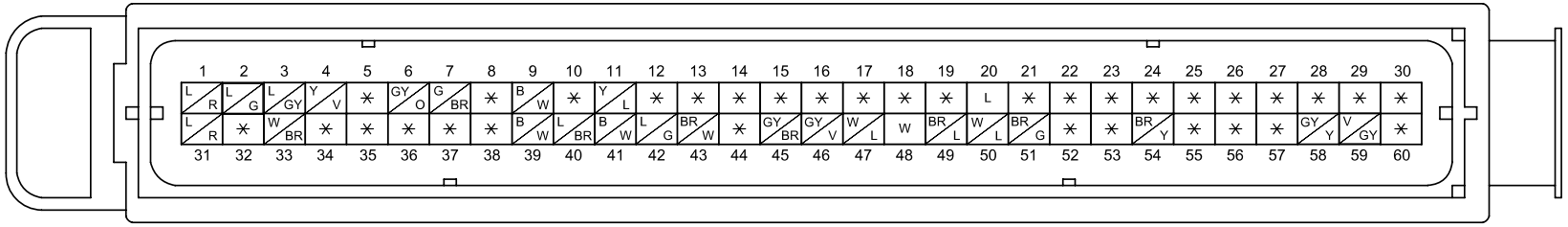

0513-108
SELECTOR LEVER
COMPONENT

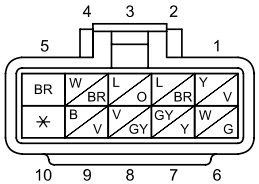

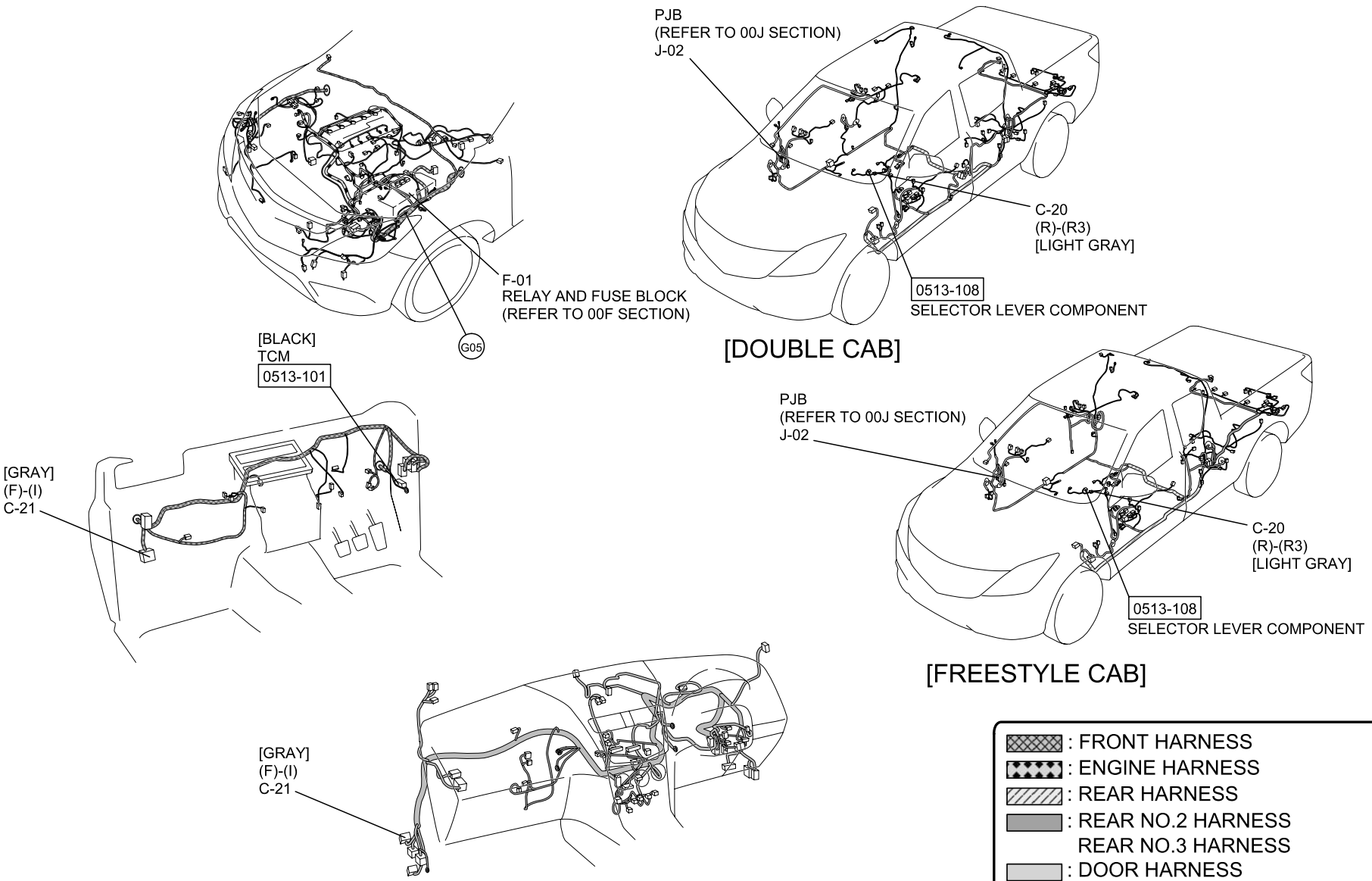
PJB
(REFER TO 00J SECTION)
J-02
C-20
(R)-(R3)
[LIGHT GRAY]
0513-108
SELECTOR LEVER COMPONENT
F-01
RELAY AND FUSE BLOCK
(REFER TO 00F SECTION)
G05
[DOUBLE CAB]
[BLACK]
TCM
0513-101
[GRAY]
(F)-(I)
C-21
PJB
(REFER TO 00J SECTION)
J-02
C-20
(R)-(R3)
[LIGHT GRAY]
0513-108
SELECTOR LEVER COMPONENT
[FREESTYLE CAB]
[GRAY]
(F)-(I)
C-21
: FRONT HARNESS
: ENGINE HARNESS
: REAR HARNESS
: REAR NO.2 HARNESS
REAR NO.3 HARNESS
: DOOR HARNESS
: INTERIOR LIGHT HARNESS
: INSTRUMENT PANEL HARNESS

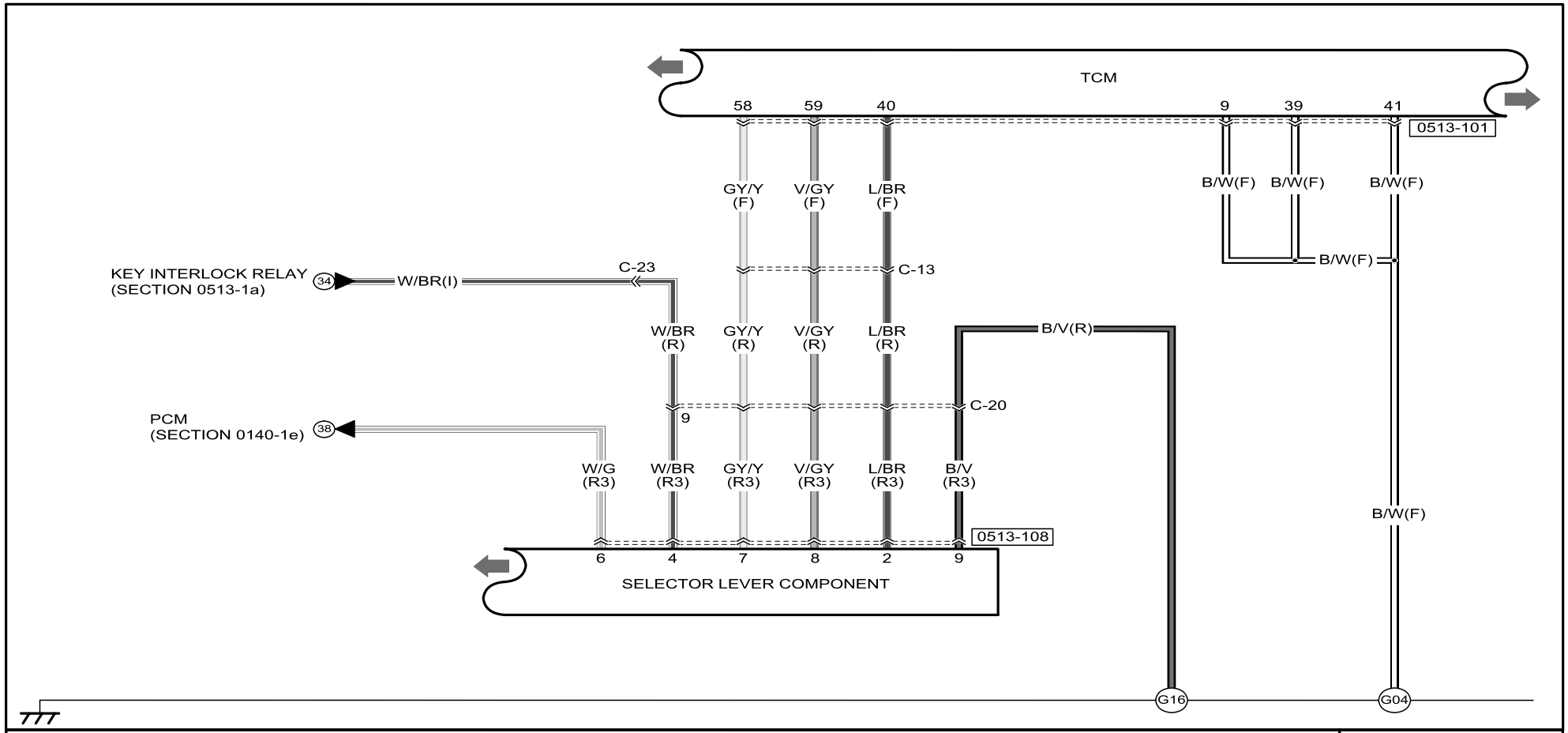

0513-101
TCM

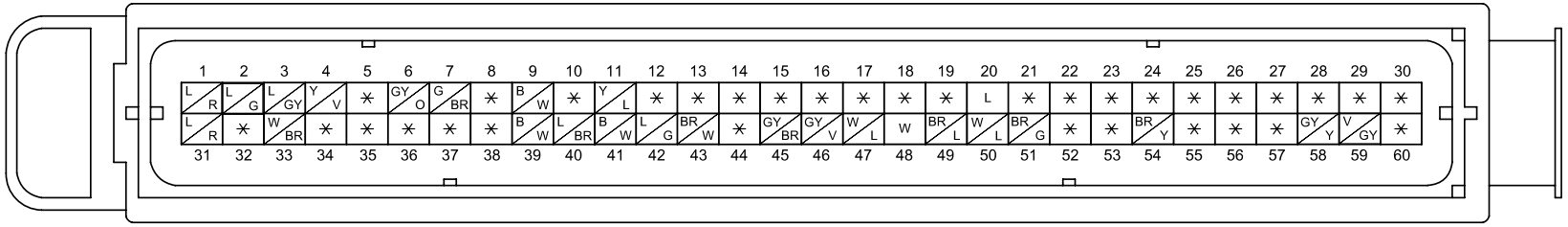

0513-108
SELECTOR LEVER COMPONENT

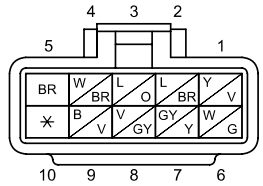

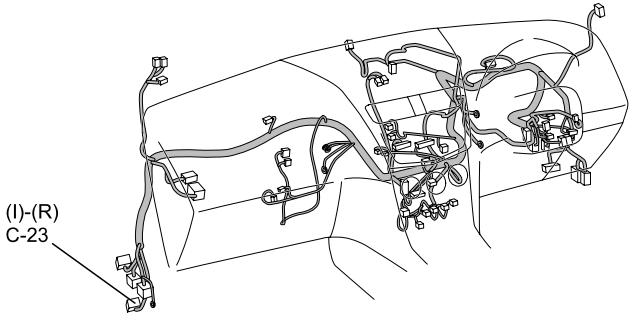

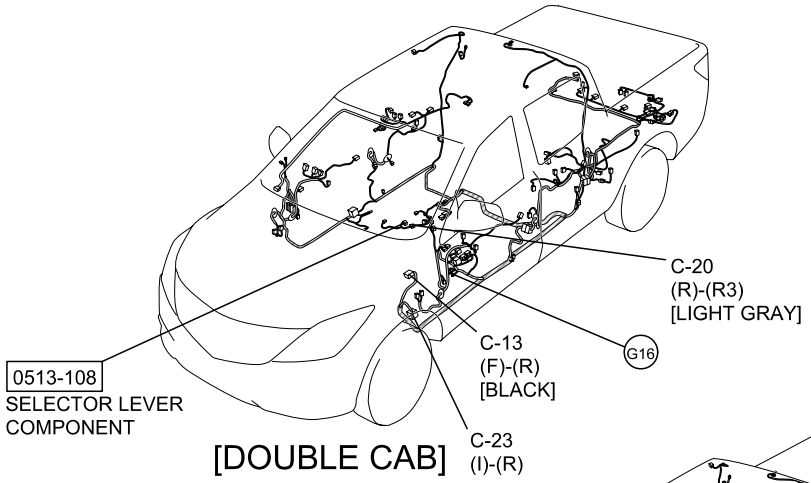

[DOUBLE CAB]

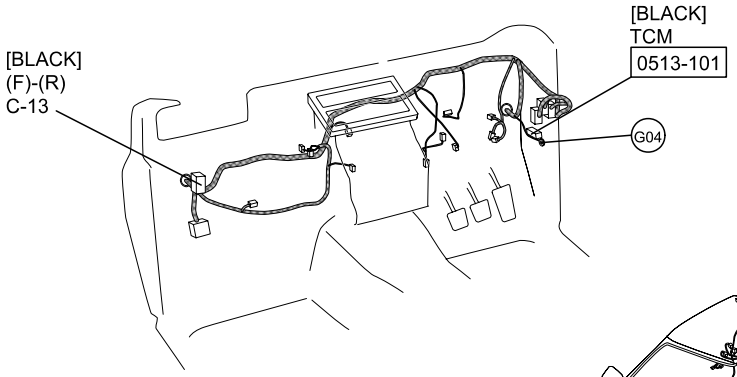

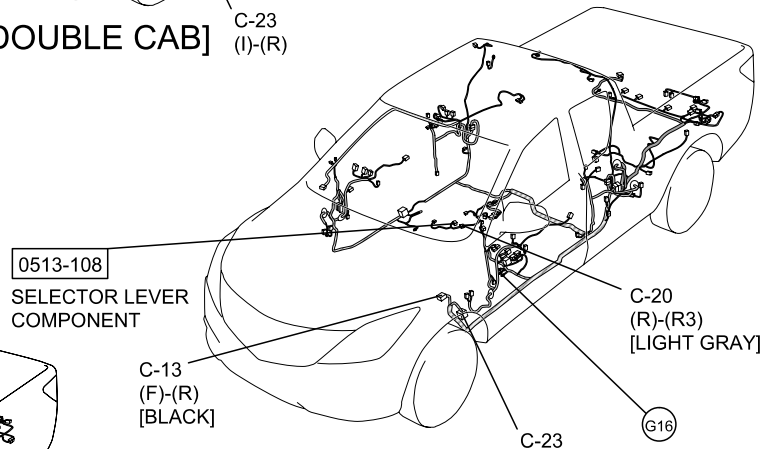

[FREESTYLE CAB]

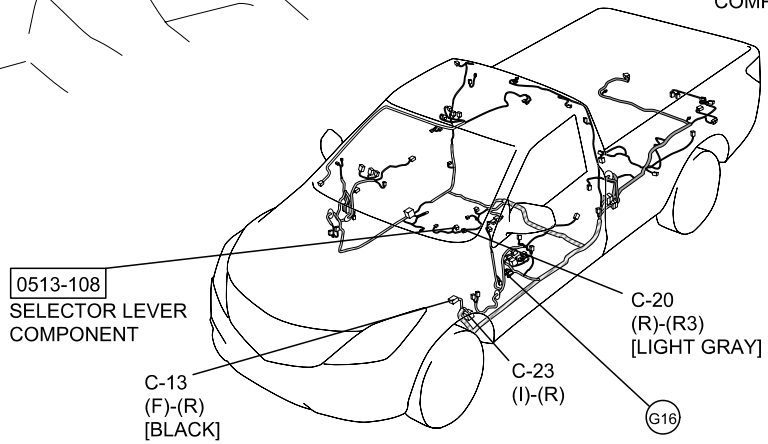

[REGULAR CAB]

: FRONT HARNESS
: REAR HARNESS
: REAR NO.2 HARNESS
REAR NO.3 HARNESS
: DOOR HARNESS
: INTERIOR LIGHT HARNESS
: INSTRUMENT PANEL HARNESS

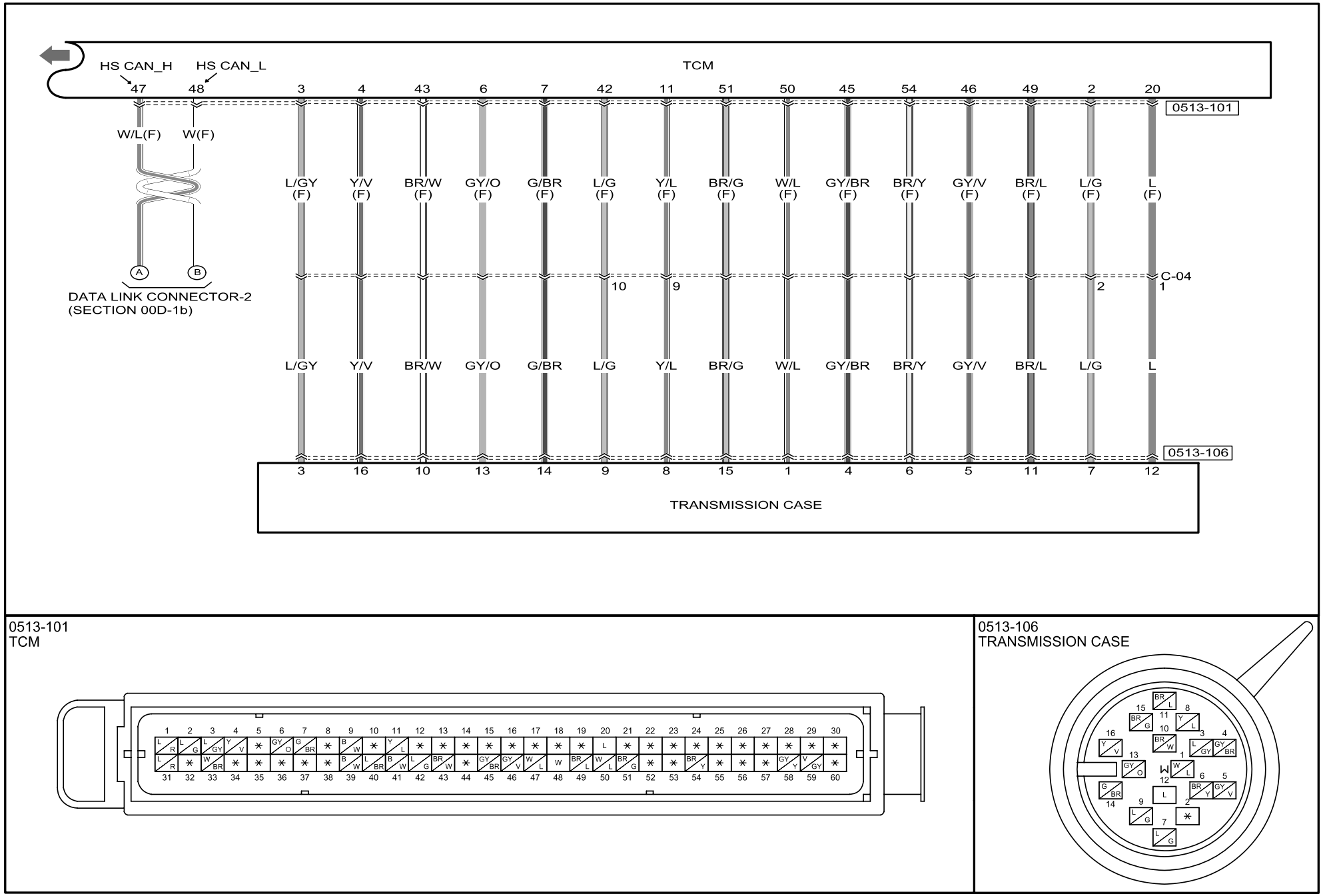
HS CAN_H
HS CAN_L
TCM
47 48 3 4 43 6 7 42 11 51 50 45 54 46 49 2 20
0513-101
W/L(F) W(F)
L/GY (F) Y/V (F) BR/W (F) GY/O (F) G/BR (F) L/G (F) Y/L (F) BR/G (F) W/L (F) GY/BR (F) BR/Y (F) GY/V (F) BR/L (F) L/G (F) L (F)
A B
DATA LINK CONNECTOR-2
(SECTION 00D-1b)
10 9 2 C-04 1
L/GY Y/V BR/W GY/O G/BR L/G Y/L BR/G W/L GY/BR BR/Y GY/V BR/L L/G L
0513-106
3 16 10 13 14 9 8 15 1 4 6 5 11 7 12
TRANSMISSION CASE
0513-101
TCM
0513-106
TRANSMISSION CASE

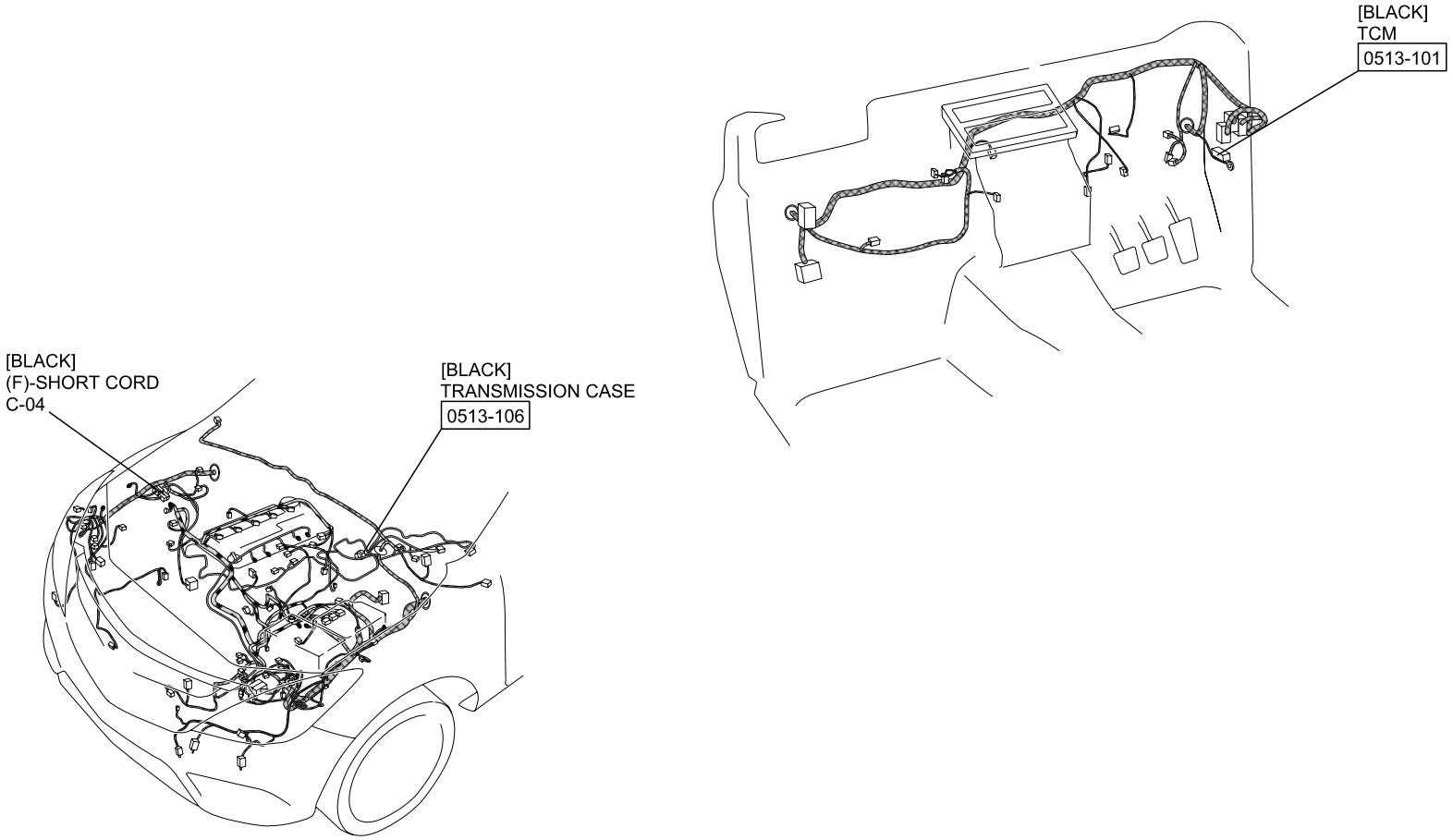

: FRONT HARNESS
: ENGINE HARNESS

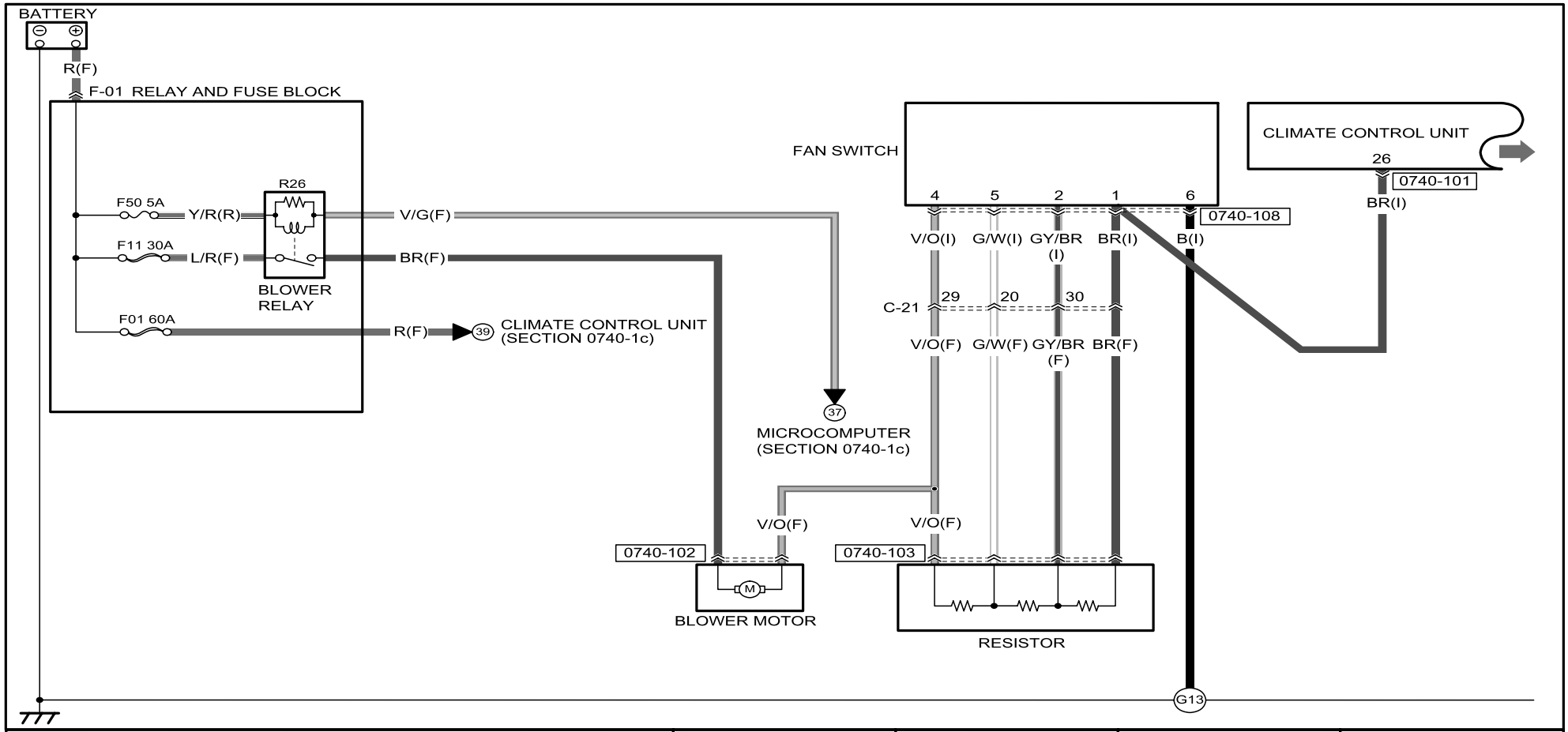

0740-101
CLIMATE CONTROL UNIT

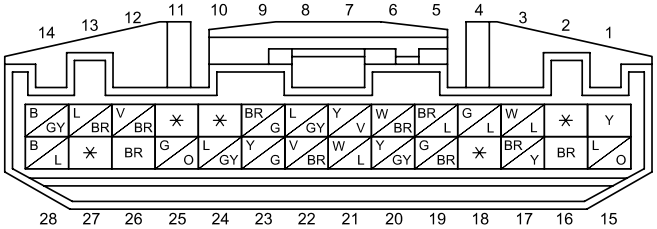

0740-102
BLOWER MOTOR

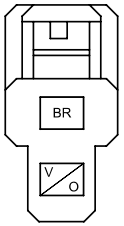

0740-103
RESISTOR

0740-108
FAN SWITCH

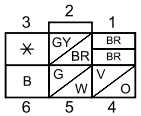

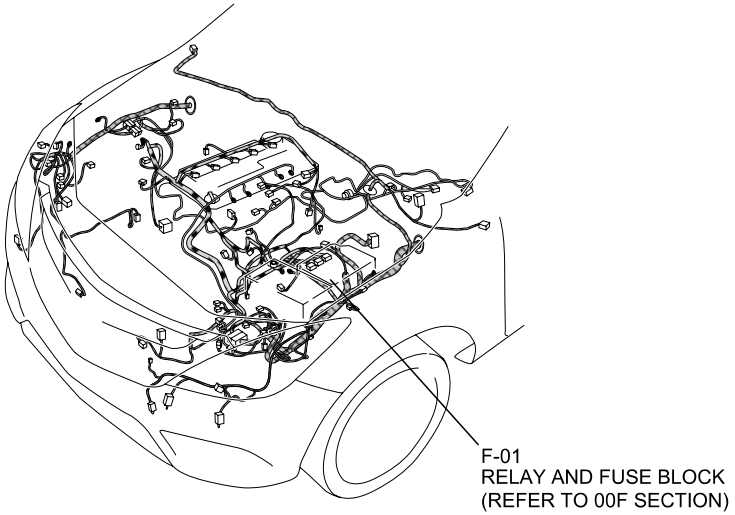

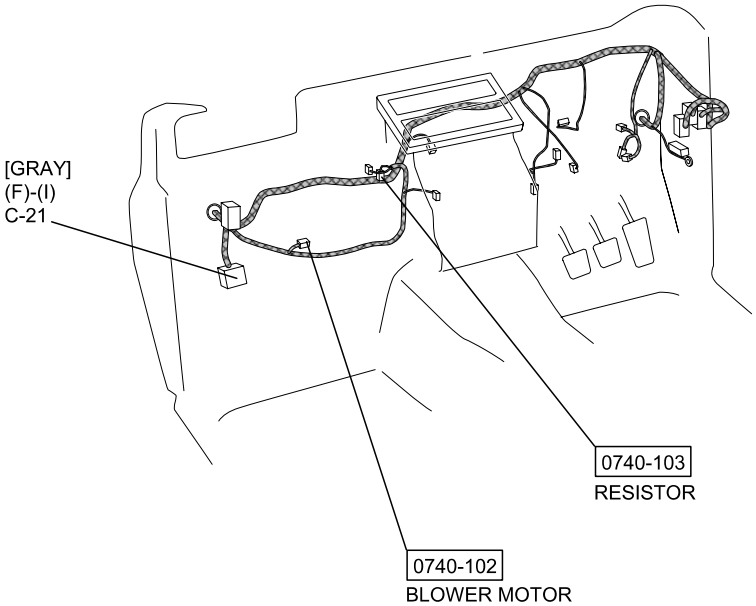

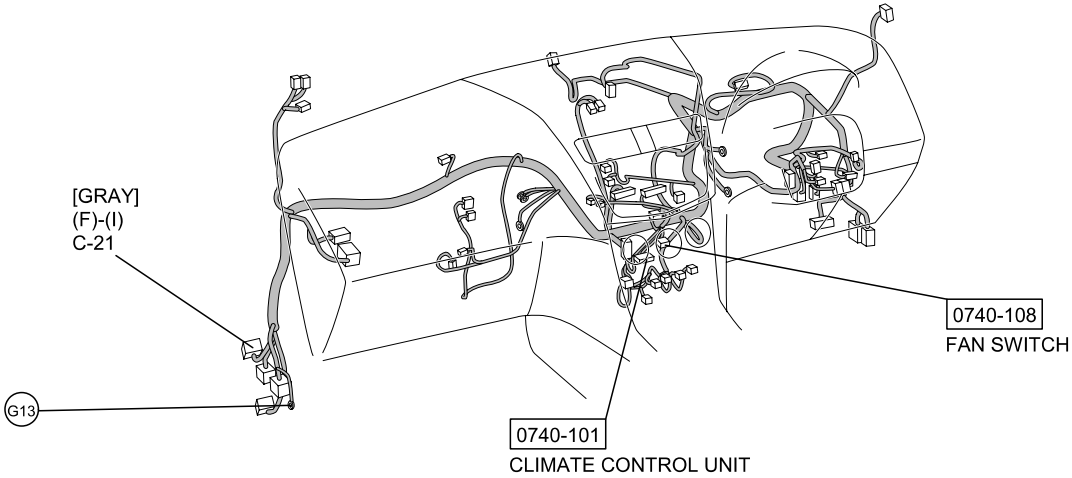

: FRONT HARNESS
: ENGINE HARNESS
: INSTRUMENT PANEL HARNESS

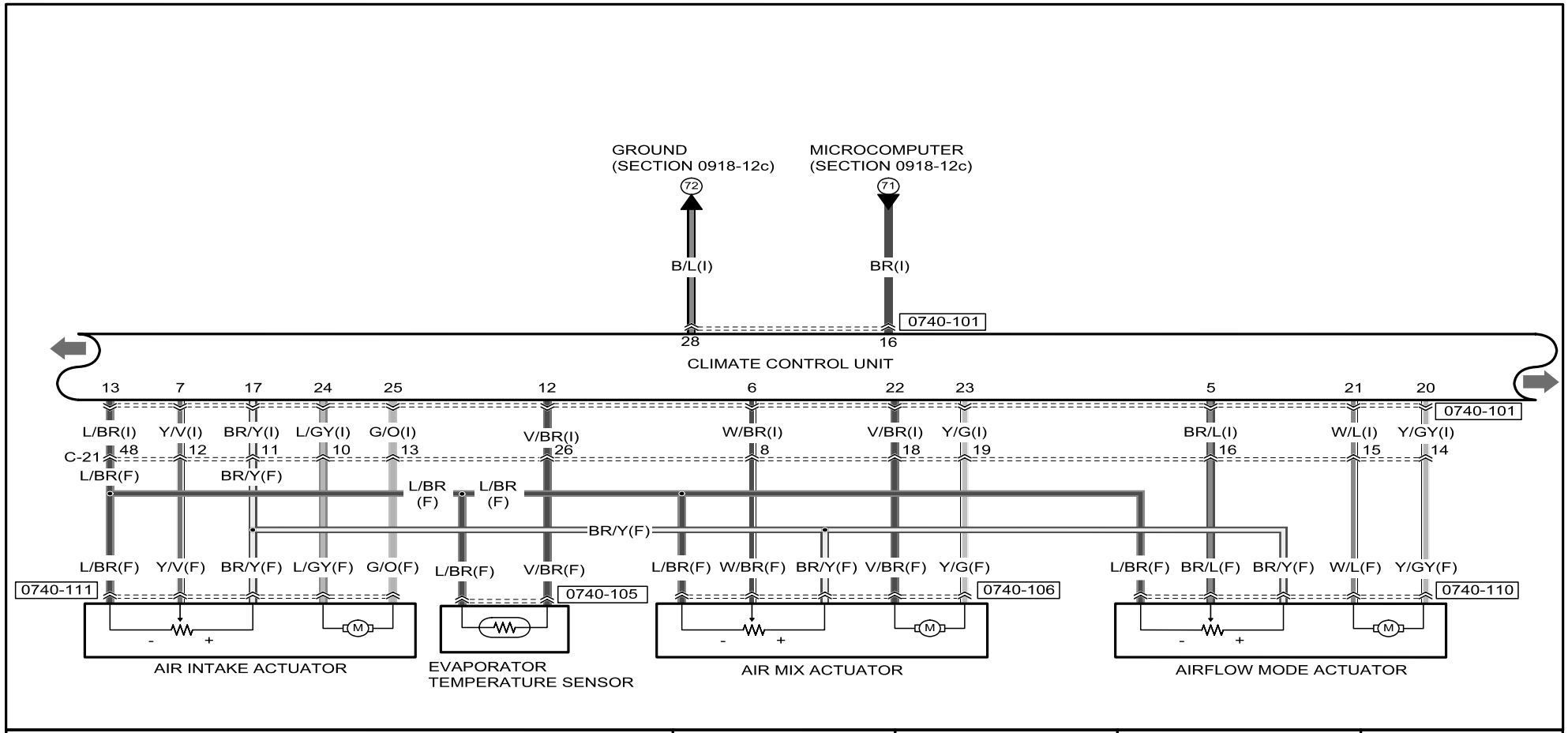

0740-101
CLIMATE CONTROL UNIT

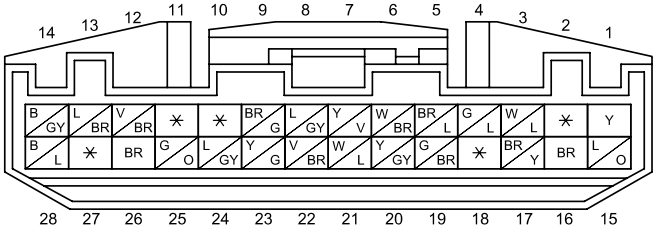

0740-105
EVAPORATOR
TEMPERATURE SENSOR

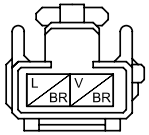

0740-106
AIR MIX ACTUATOR

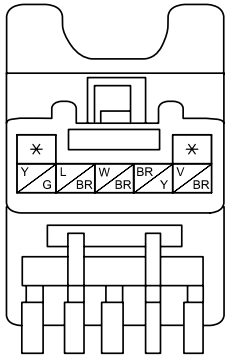

0740-110
AIRFLOW MODE ACTUATOR

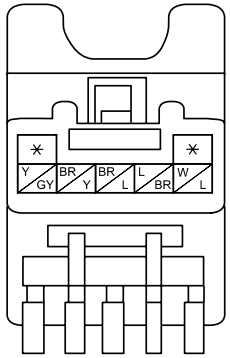

0740-111
AIR INTAKE ACTUATOR

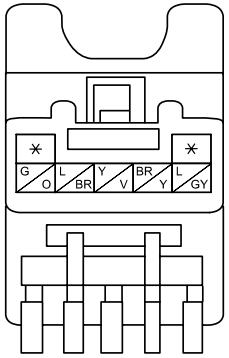

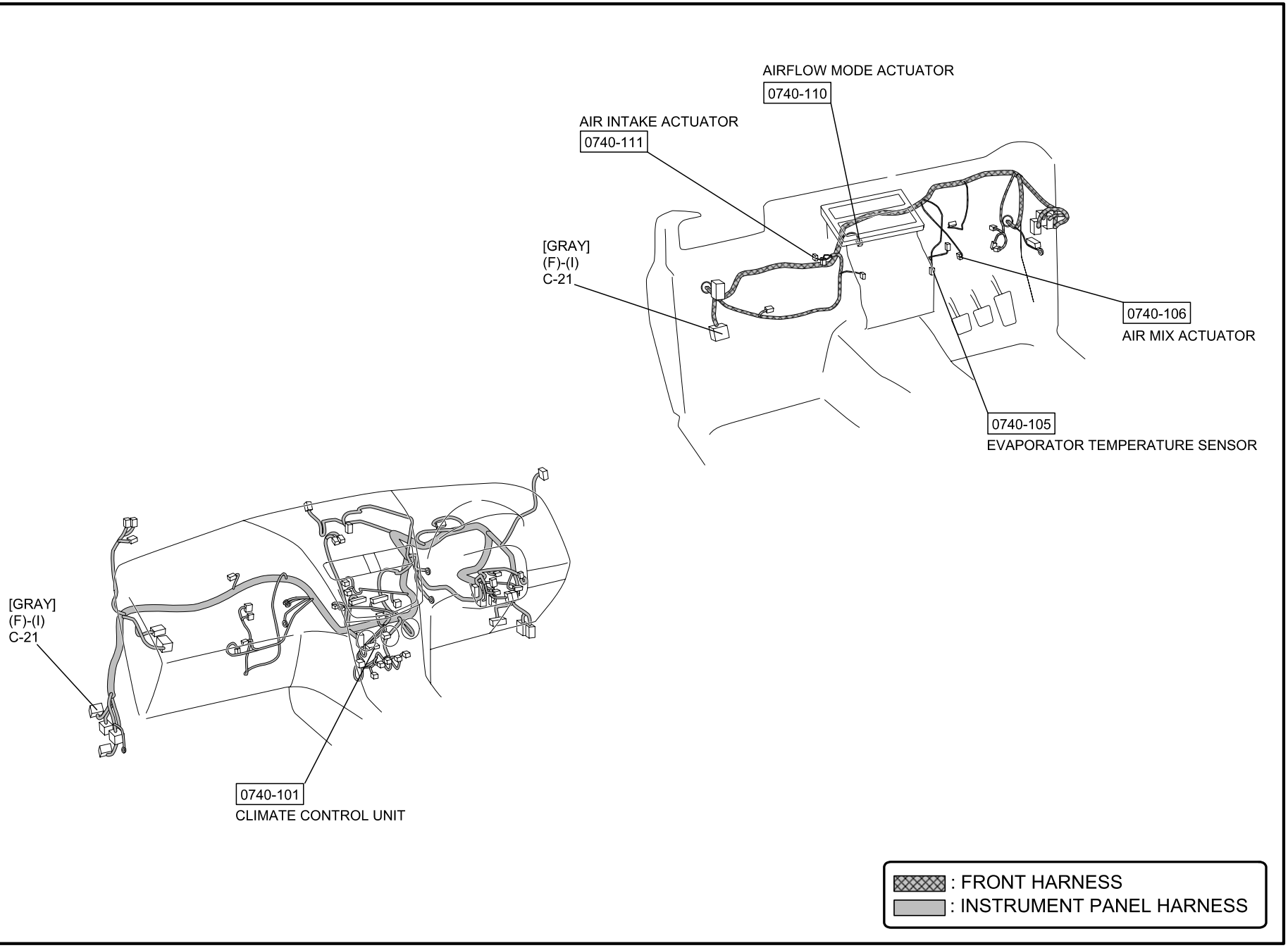
AIRFLOW MODE ACTUATOR
0740-110
AIR INTAKE ACTUATOR
0740-111
[GRAY]
(F)-(I)
C-21
0740-106
AIR MIX ACTUATOR
0740-105
EVAPORATOR TEMPERATURE SENSOR
[GRAY]
(F)-(I)
C-21
0740-101
CLIMATE CONTROL UNIT
: FRONT HARNESS
: INSTRUMENT PANEL HARNESS

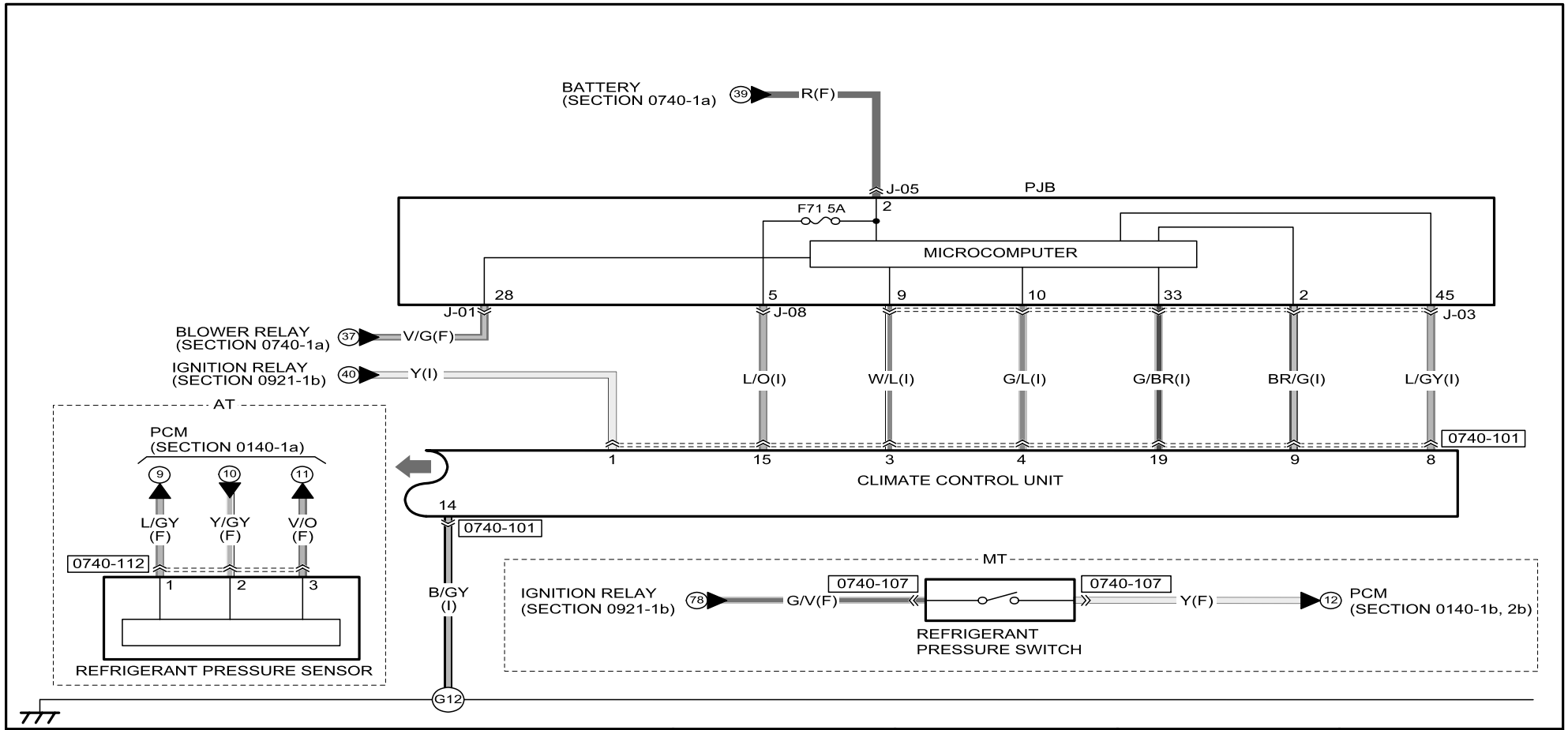

0740-101
CLIMATE CONTROL UNIT

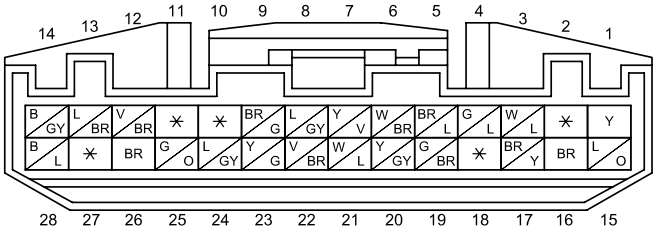

0740-107
REFRIGERANT
PRESSURE SWITCH

0740-112
REFRIGERANT
PRESSURE SENSOR

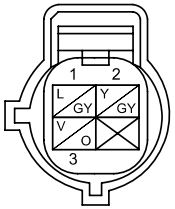

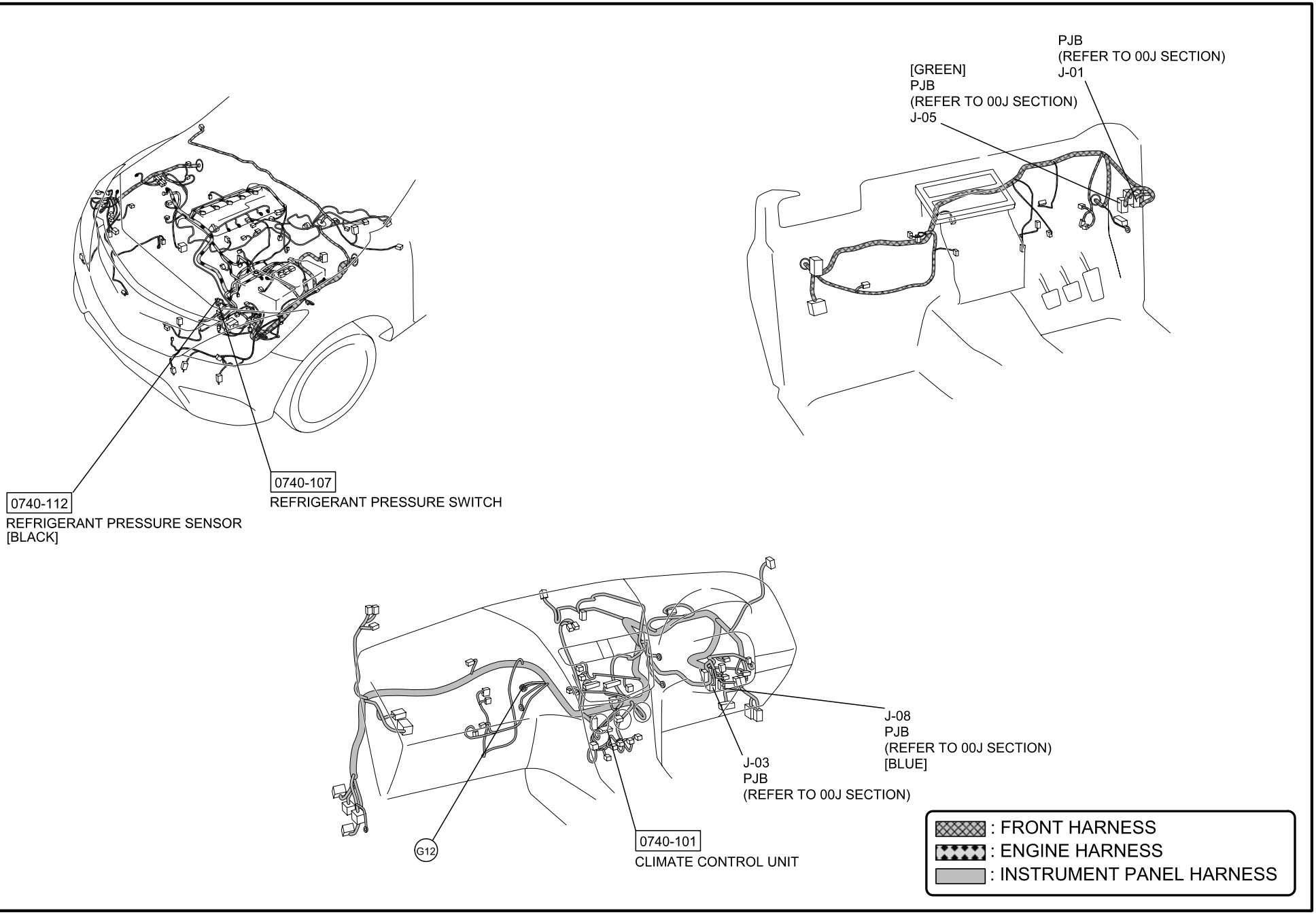
PJB
(REFER TO 00J SECTION)
J-01
[GREEN]
PJB
(REFER TO 00J SECTION)
J-05
0740-112
REFRIGERANT PRESSURE SENSOR
[BLACK]
0740-107
REFRIGERANT PRESSURE SWITCH
J-08
PJB
(REFER TO 00J SECTION)
[BLUE]
J-03
PJB
(REFER TO 00J SECTION)
G12
0740-101
CLIMATE CONTROL UNIT
: FRONT HARNESS
: ENGINE HARNESS
: INSTRUMENT PANEL HARNESS

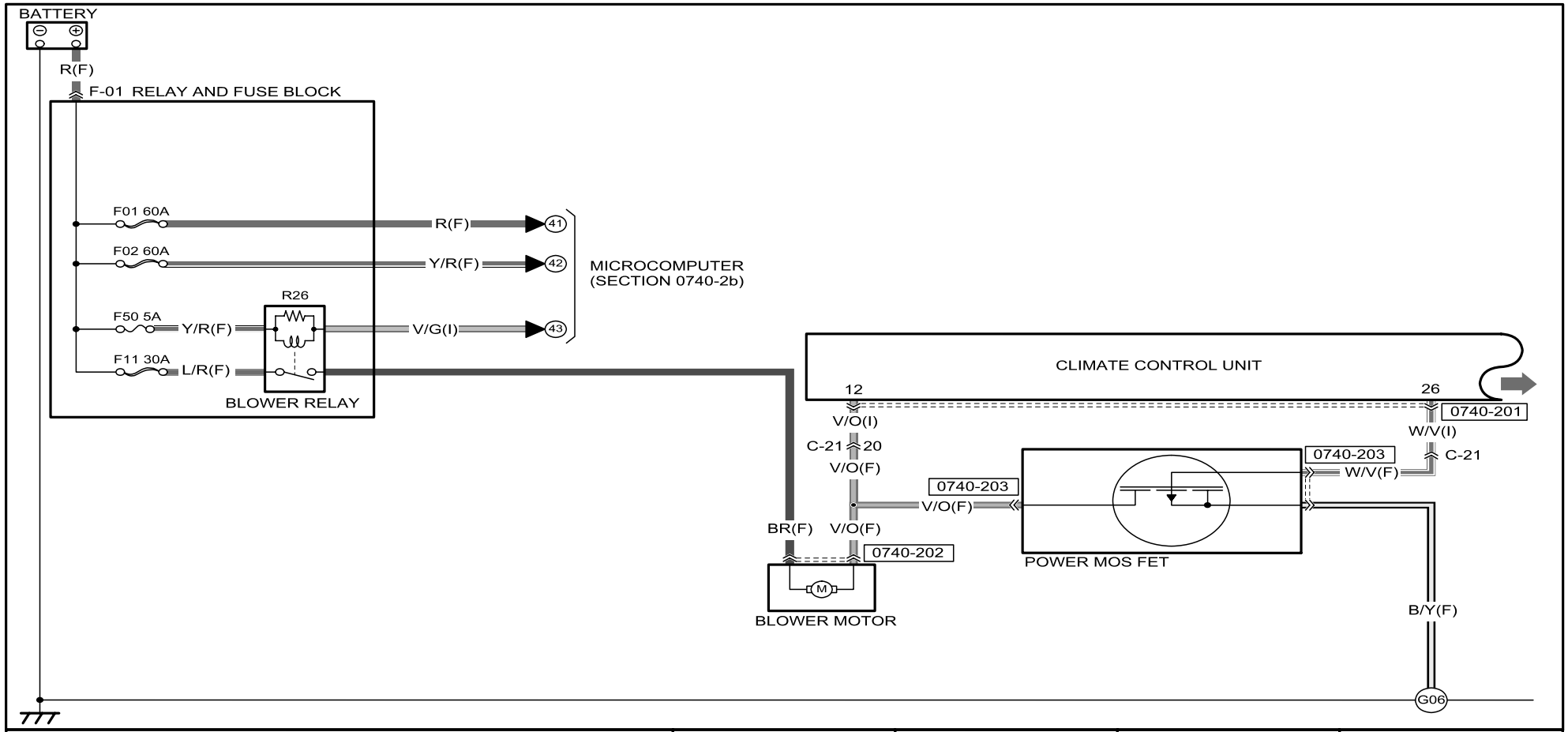

0740-201
CLIMATE CONTROL UNIT

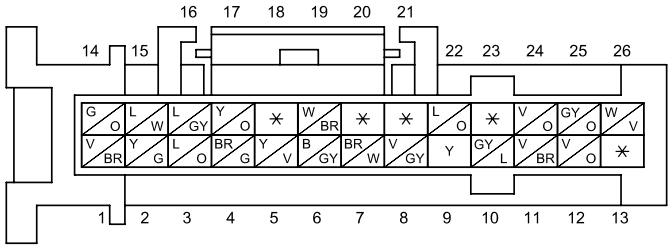

0740-202
BLOWER MOTOR

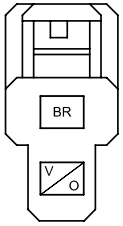

0740-203
POWER MOS FET

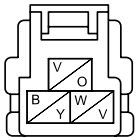

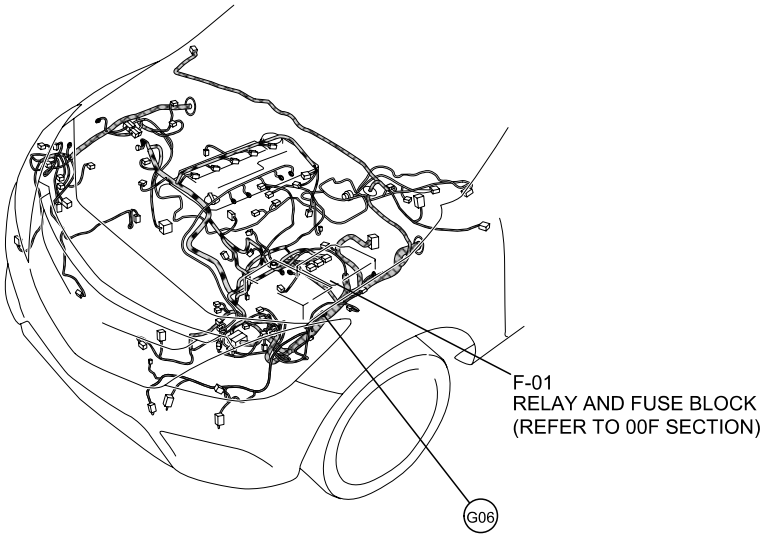

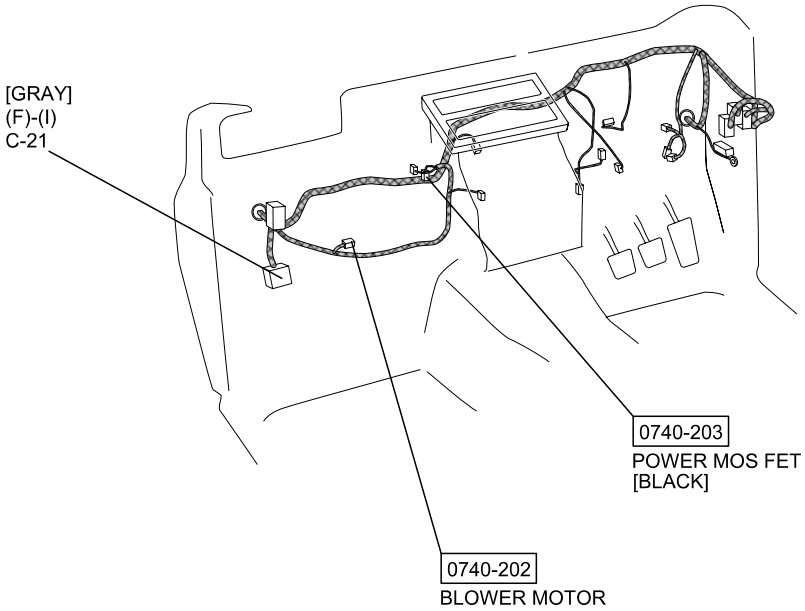

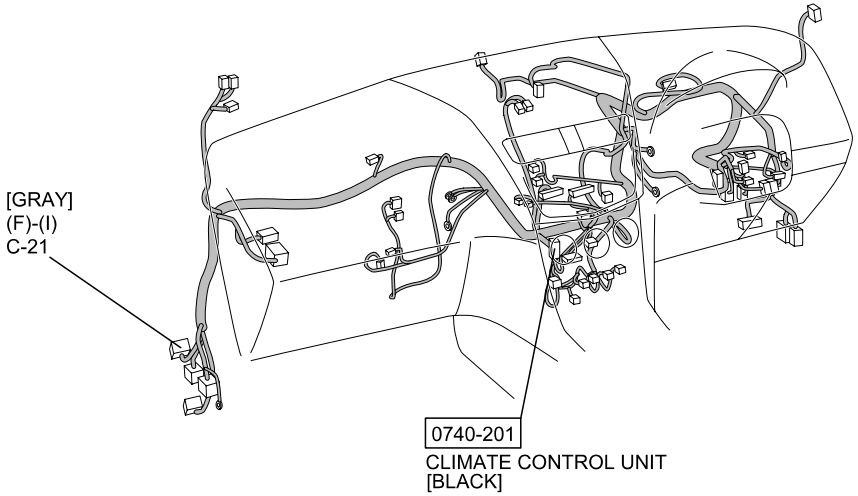

: FRONT HARNESS
: ENGINE HARNESS
: INSTRUMENT PANEL HARNESS

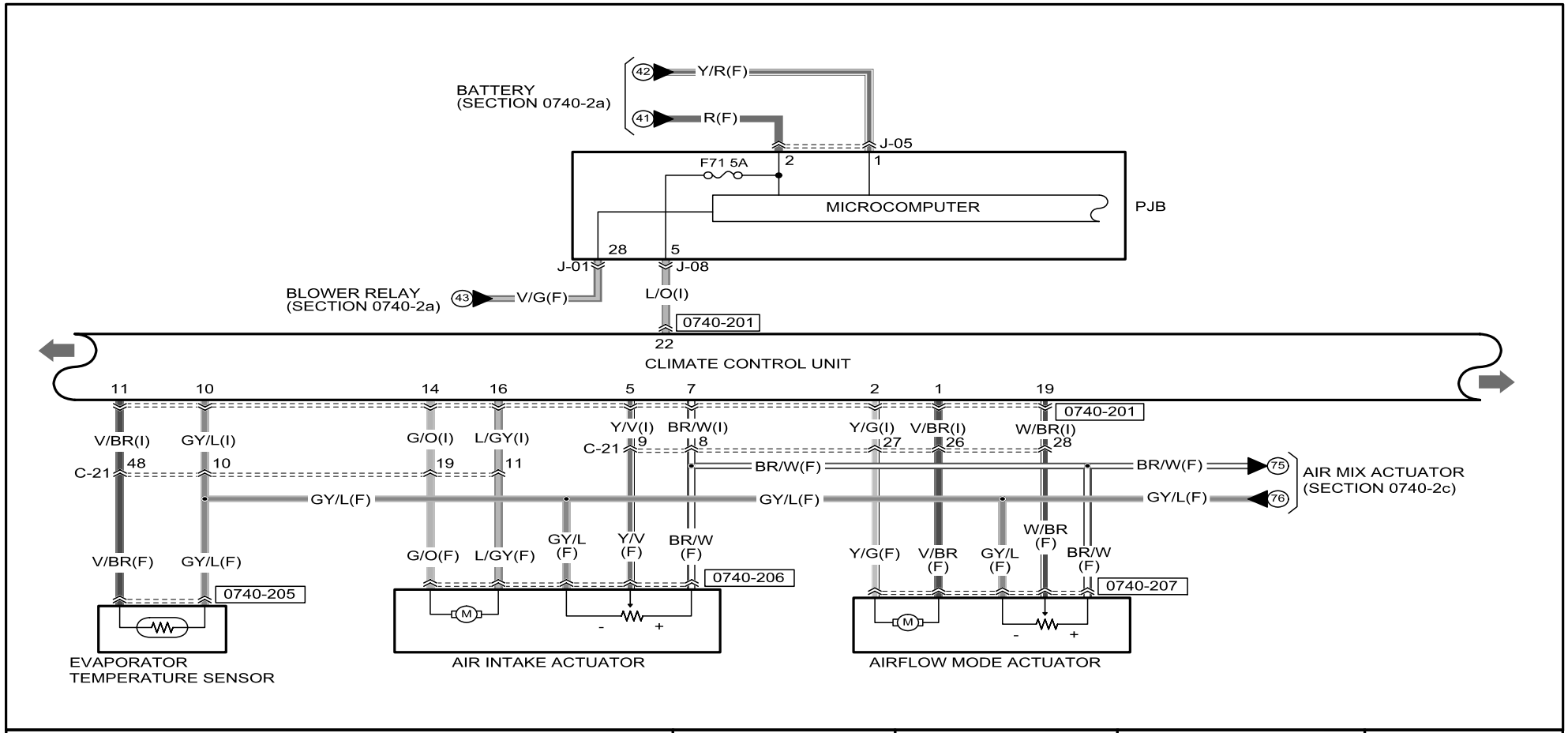

0740-201
CLIMATE CONTROL UNIT

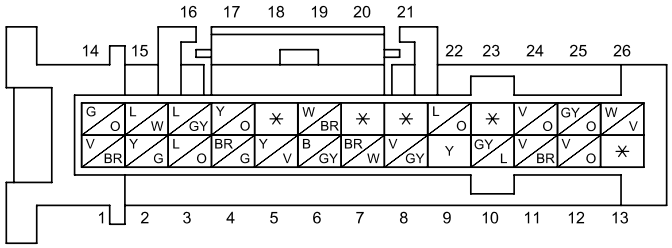

0740-205
EVAPORATOR
TEMPERATURE SENSOR

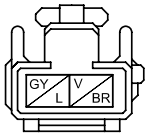

0740-206
AIR INTAKE ACTUATOR

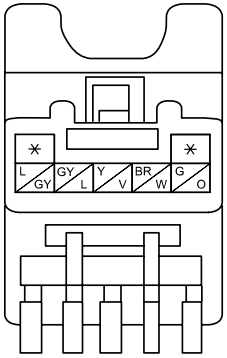

0740-207
AIRFLOW MODE ACTUATOR

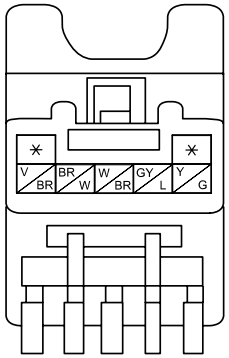

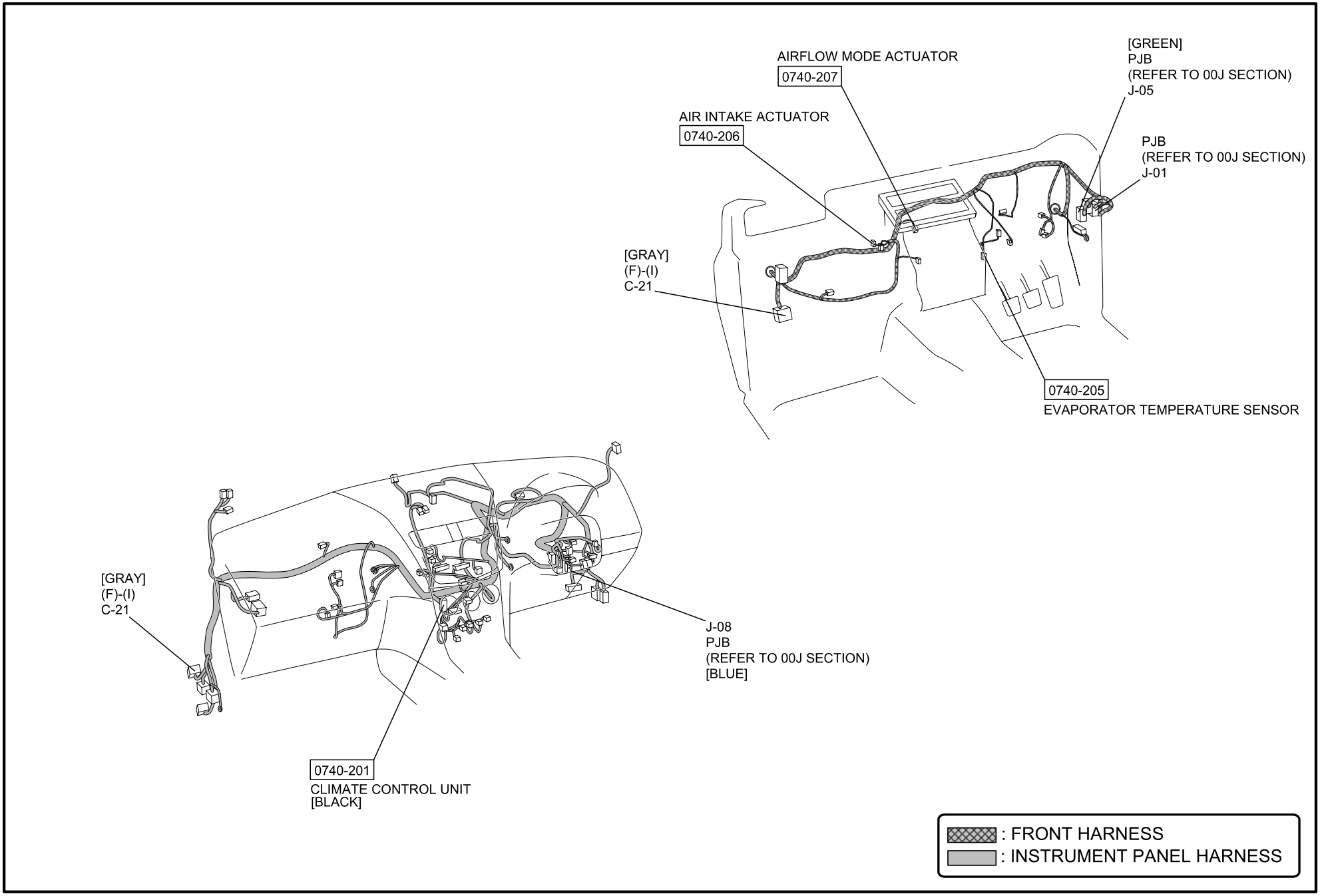
AIRFLOW MODE ACTUATOR
0740-207
AIR INTAKE ACTUATOR
0740-206
[GREEN]
PJB
(REFER TO 00J SECTION)
J-05
PJB
(REFER TO 00J SECTION)
J-01
[GRAY]
(F)-(I)
C-21
0740-205
EVAPORATOR TEMPERATURE SENSOR
[GRAY]
(F)-(I)
C-21
J-08
PJB
(REFER TO 00J SECTION)
[BLUE]
0740-201
CLIMATE CONTROL UNIT
[BLACK]
: FRONT HARNESS
: INSTRUMENT PANEL HARNESS

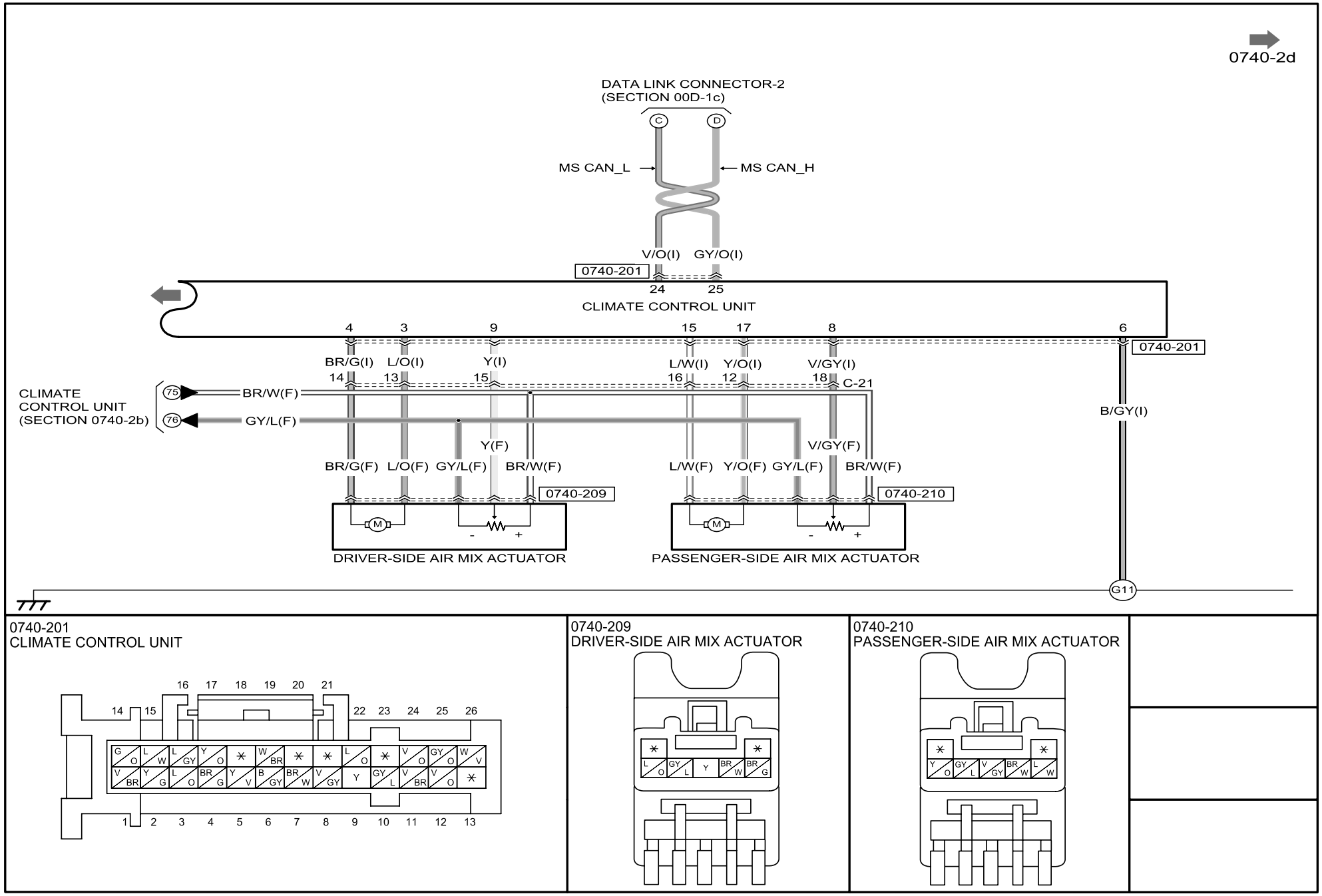

0740-201
CLIMATE CONTROL UNIT

0740-209
DRIVER-SIDE AIR MIX ACTUATOR

0740-210
PASSENGER-SIDE AIR MIX ACTUATOR

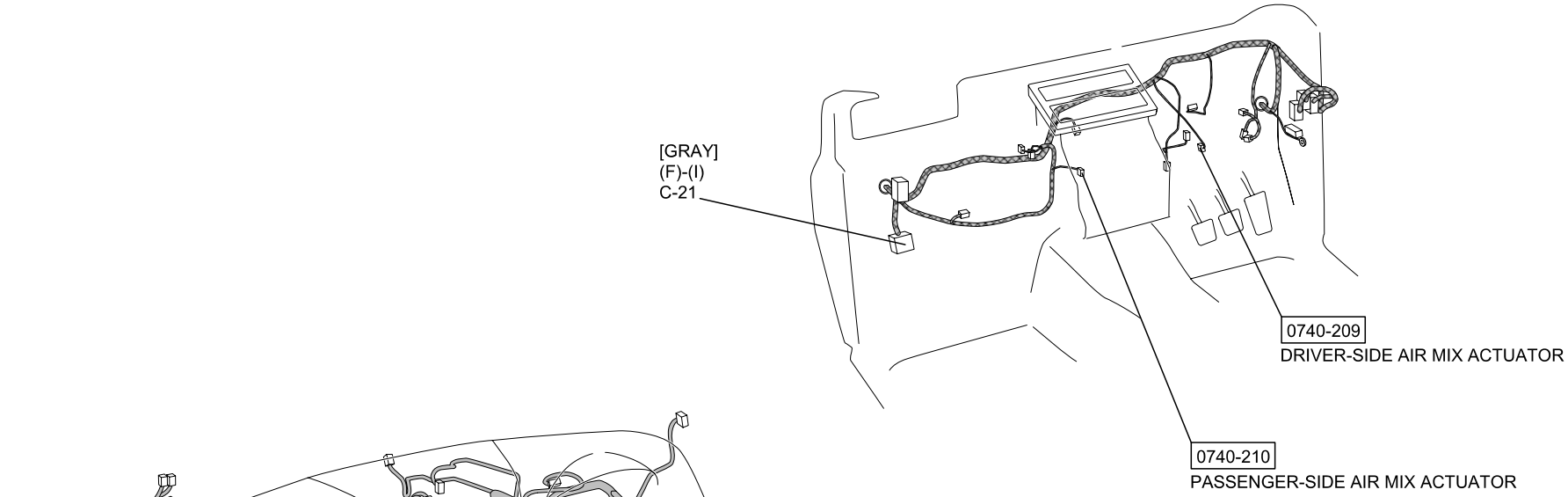

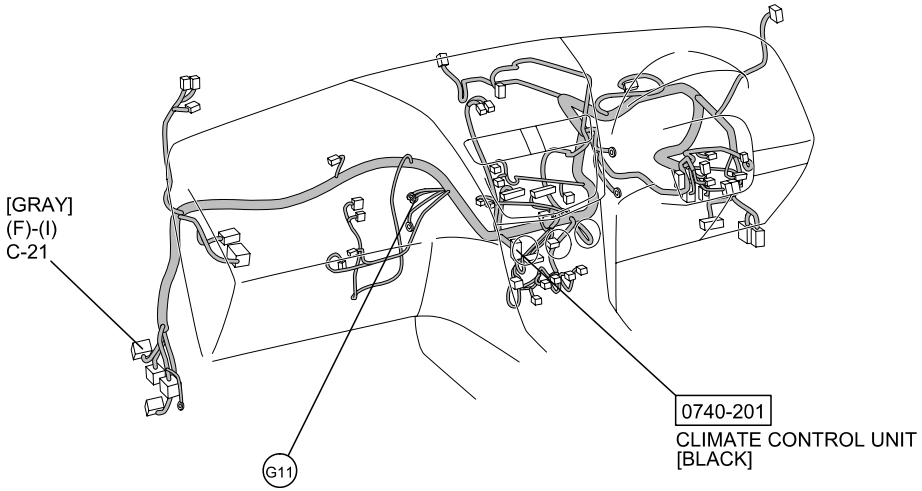

: FRONT HARNESS
: INSTRUMENT PANEL HARNESS

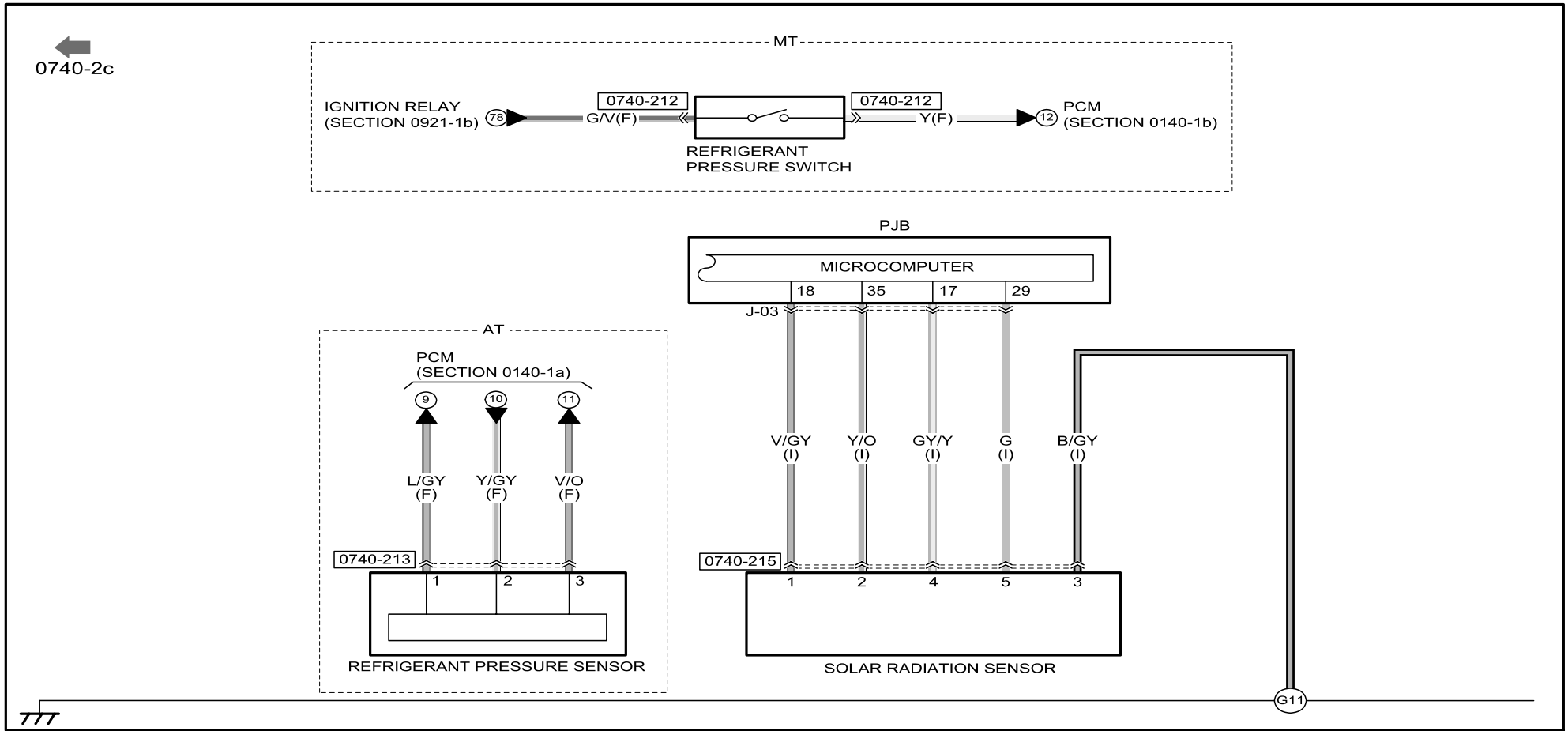

0740-212
REFRIGERANT
PRESSURE SWITCH

0740-213
REFRIGERANT
PRESSURE SENSOR

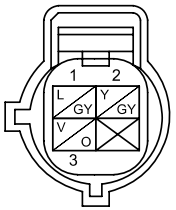

0740-215
SOLAR RADIATION SENSOR

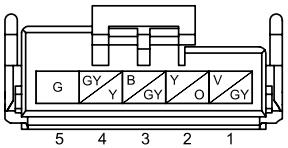

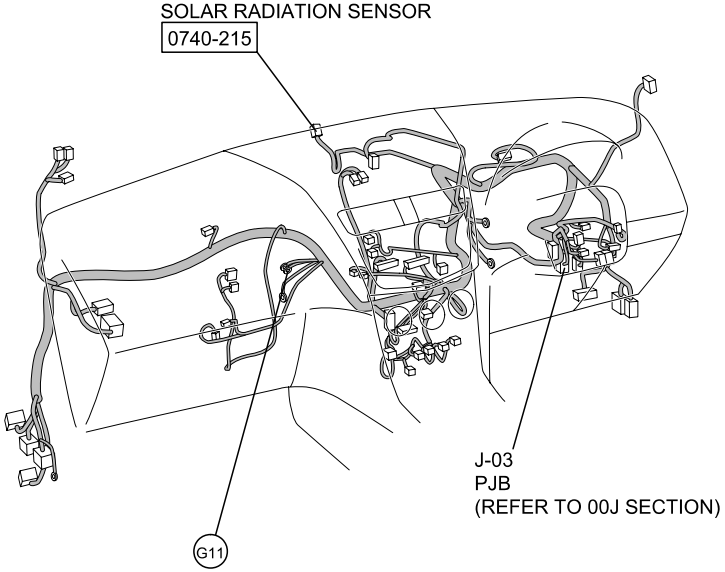

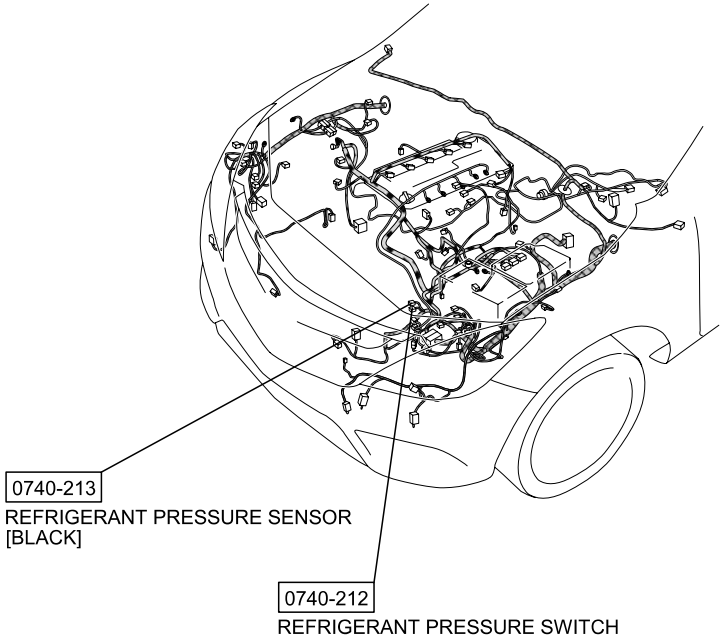

: FRONT HARNESS
: ENGINE HARNESS
: INSTRUMENT PANEL HARNESS

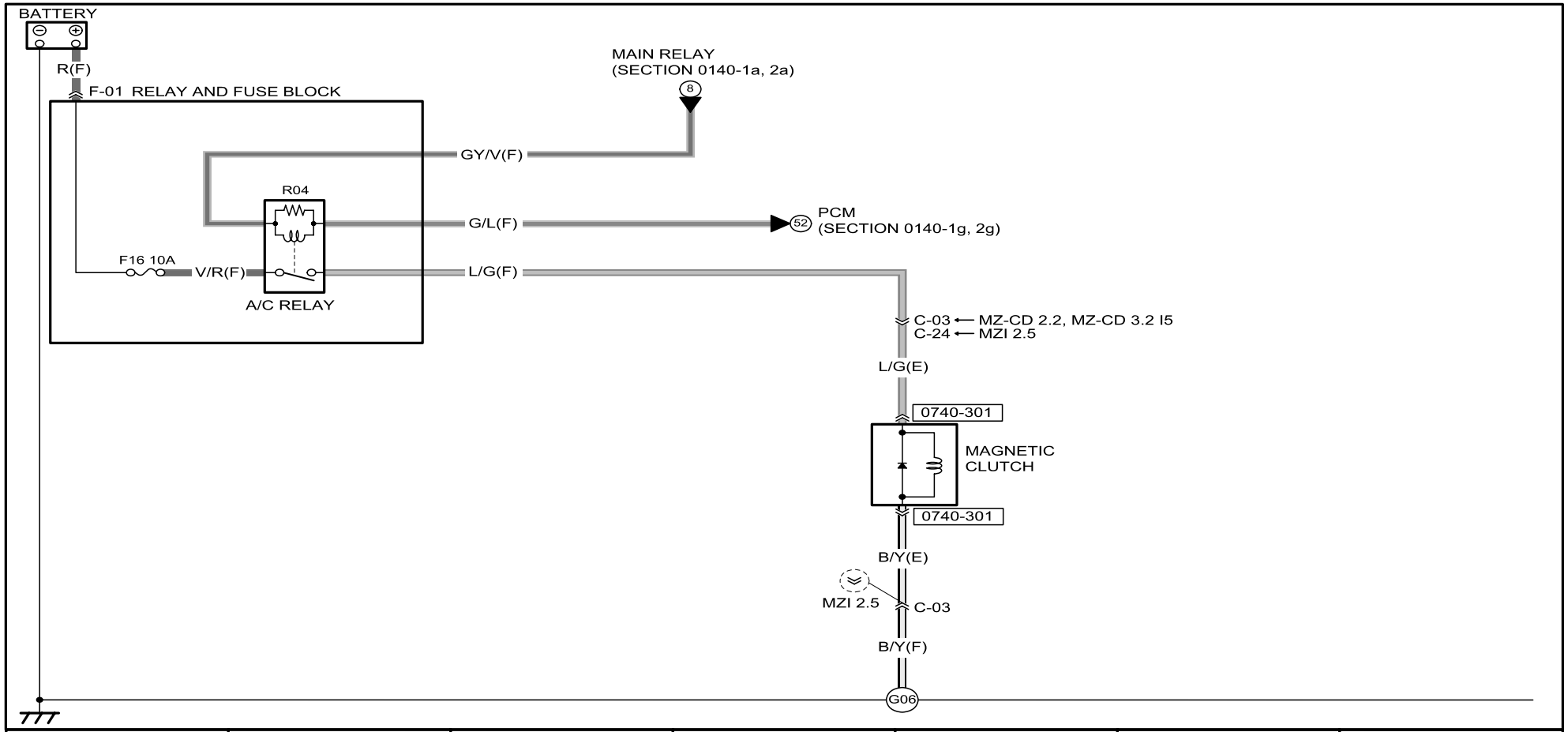

0740-301
MAGNETIC CLUTCH

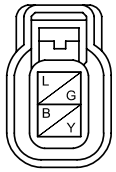

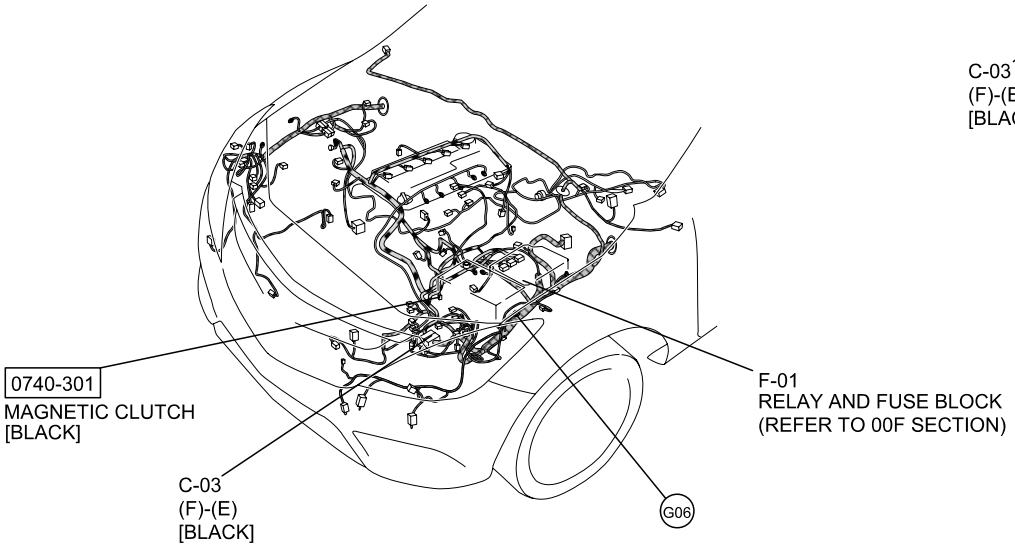

[MZ-CD 2.2, MZ-CD 3.2 I5]

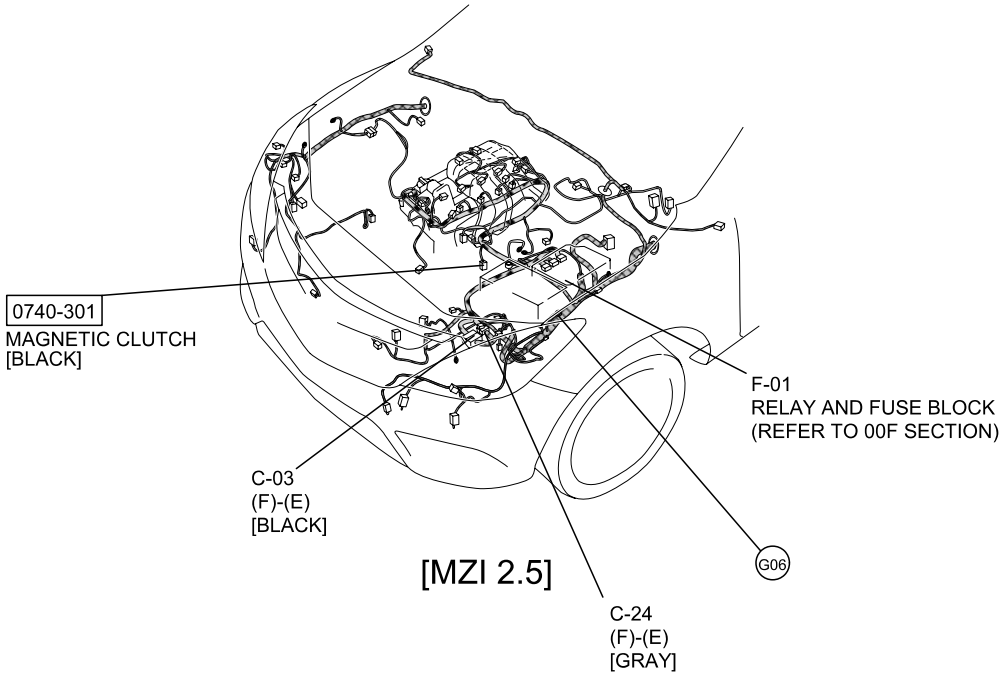

[MZI 2.5]

: FRONT HARNESS
: ENGINE HARNESS

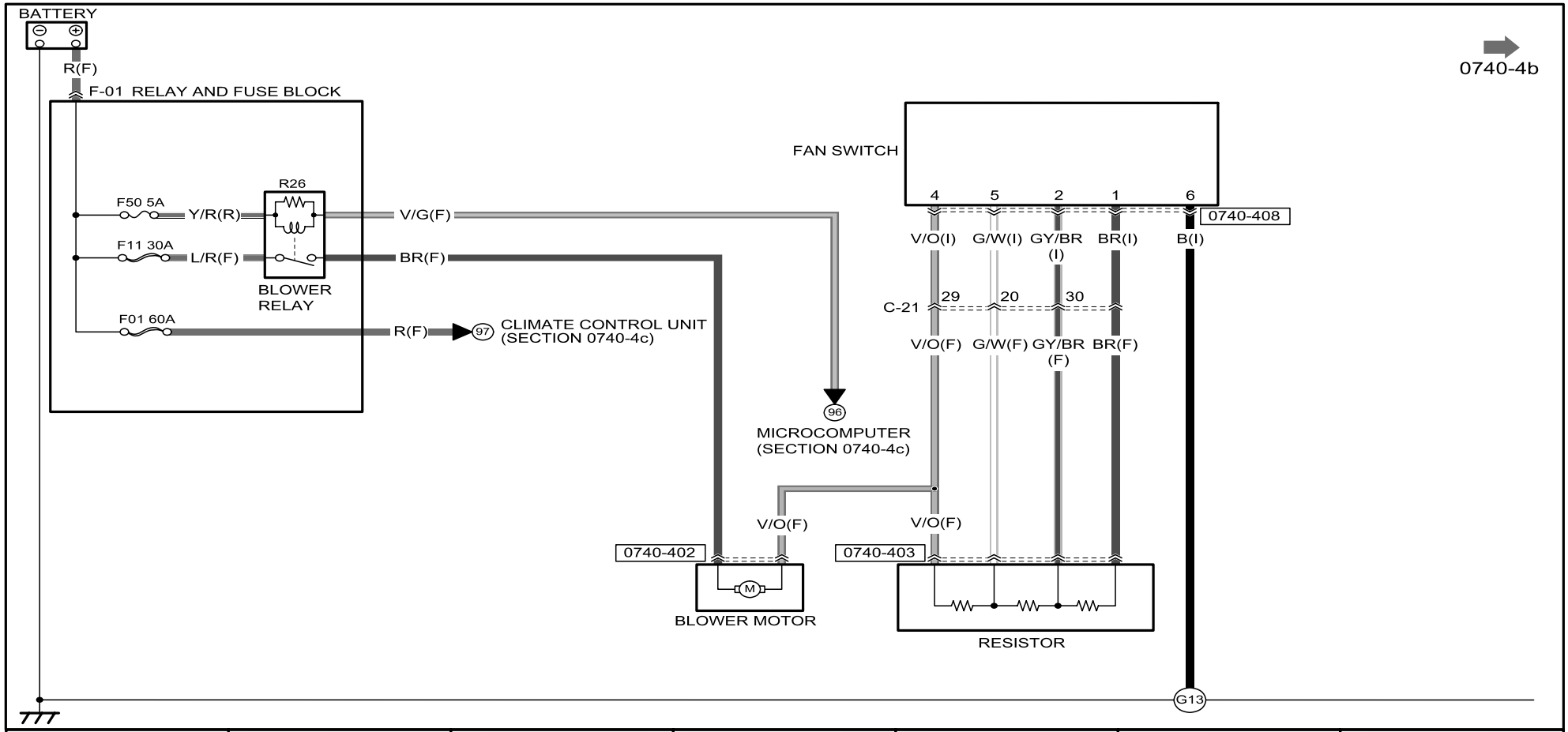

0740-402 BLOWER MOTOR	0740-403 RESISTOR	0740-408 FAN SWITCH				
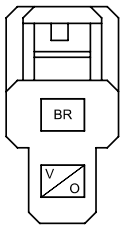		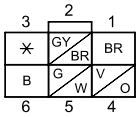				

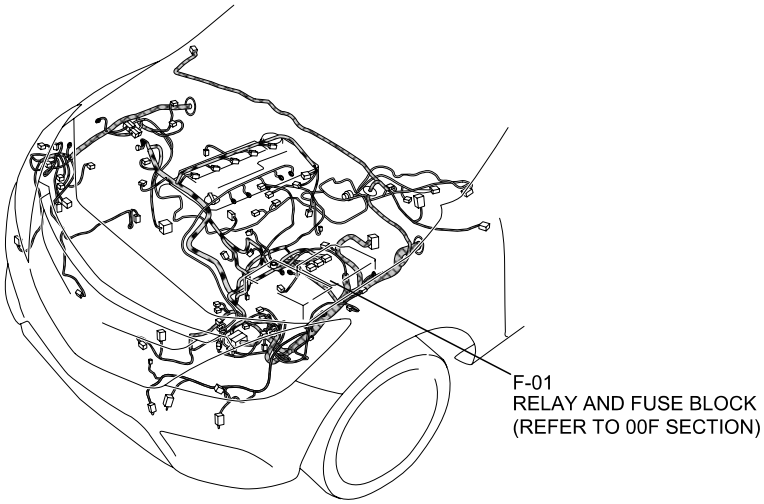

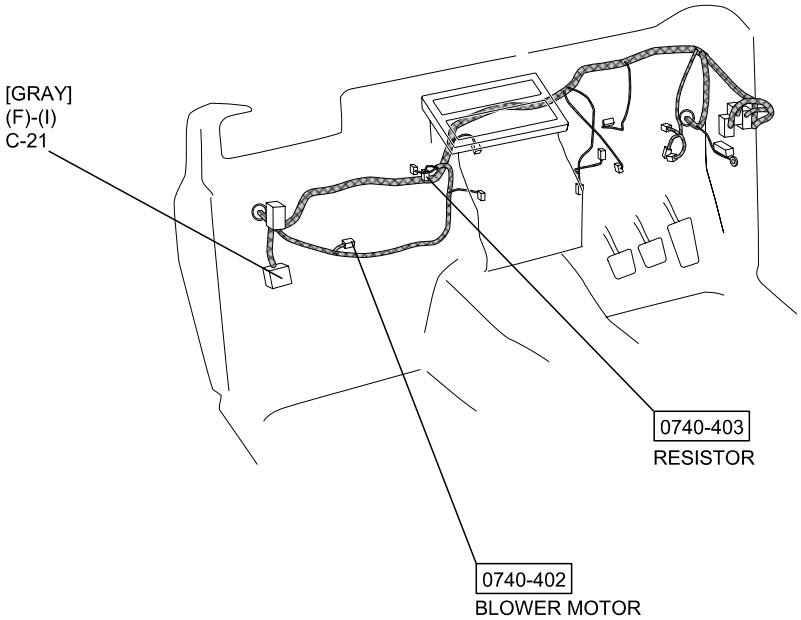

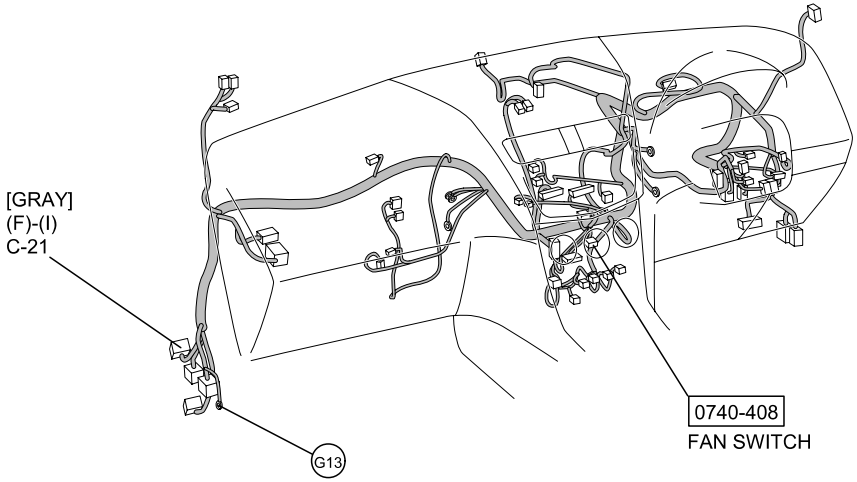

: FRONT HARNESS
: ENGINE HARNESS
: INSTRUMENT PANEL HARNESS

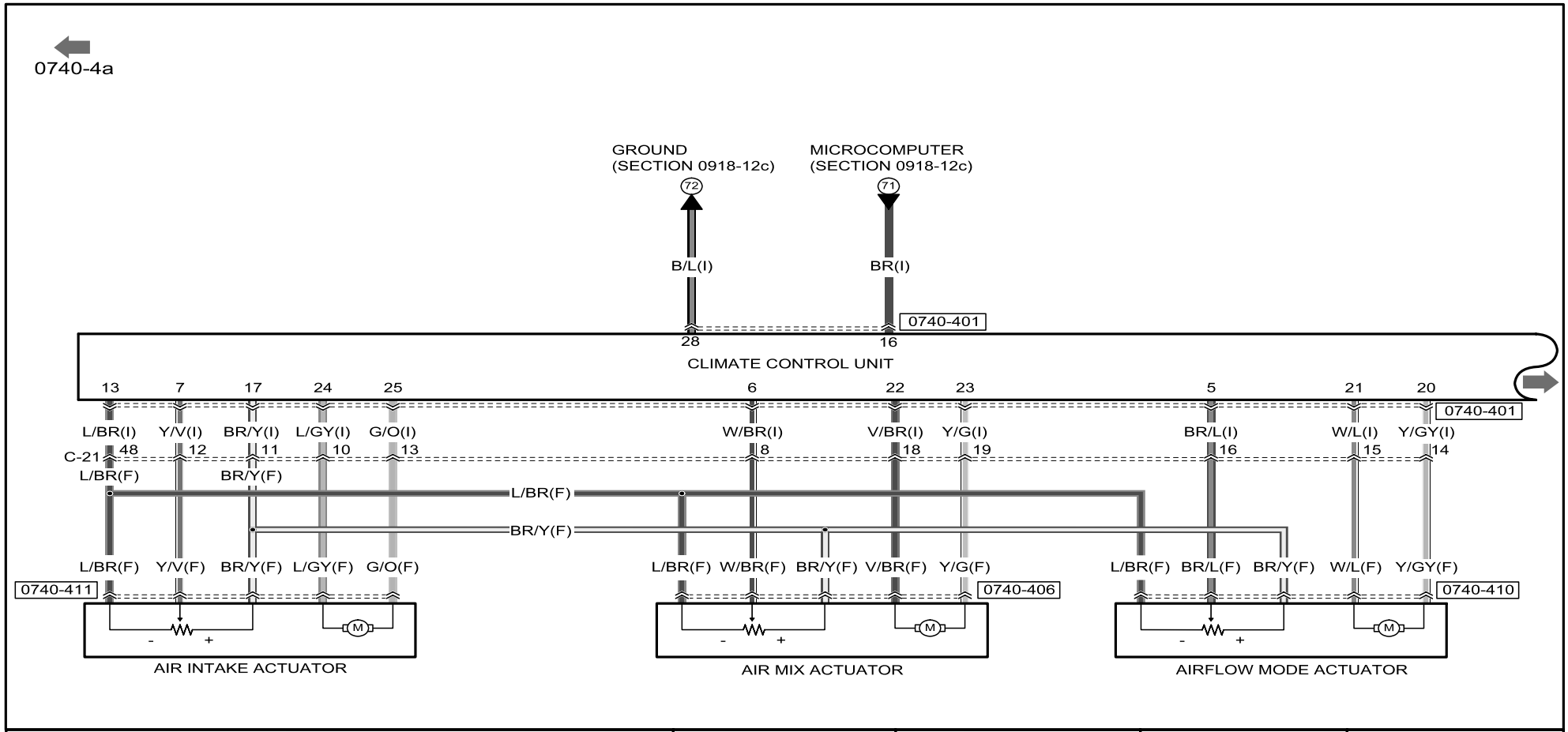

0740-401
CLIMATE CONTROL UNIT

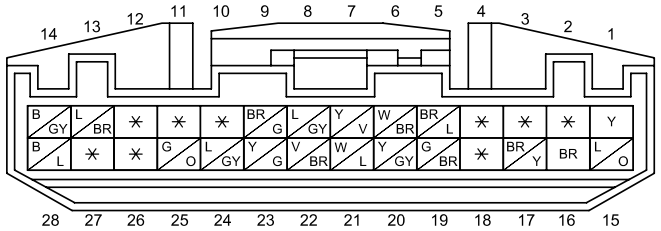

0740-406
AIR MIX ACTUATOR

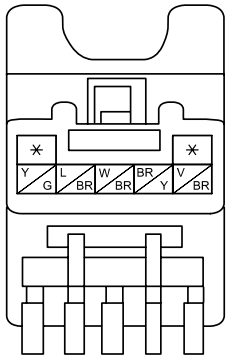

0740-410
AIRFLOW MODE ACTUATOR

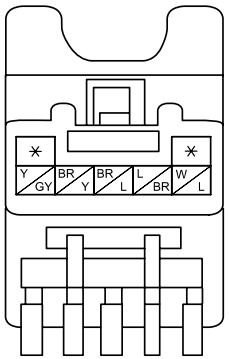

0740-411
AIR INTAKE ACTUATOR

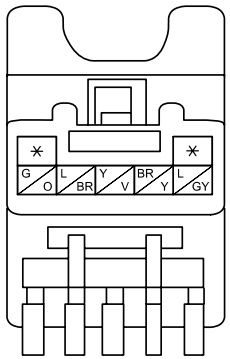

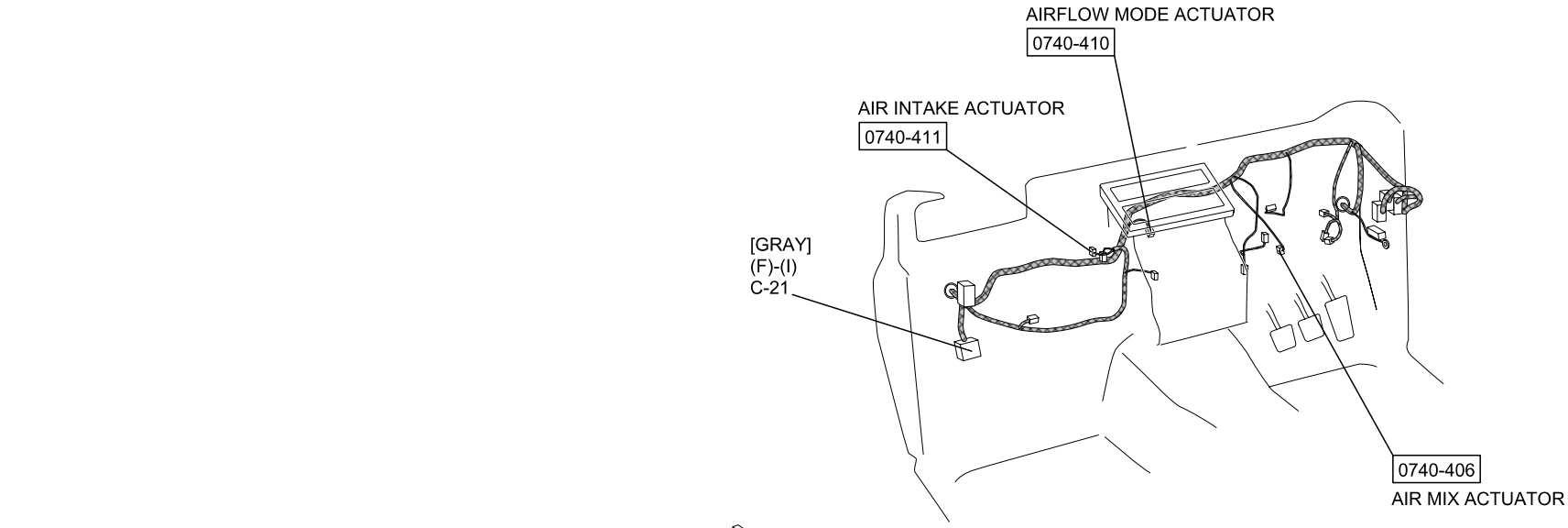

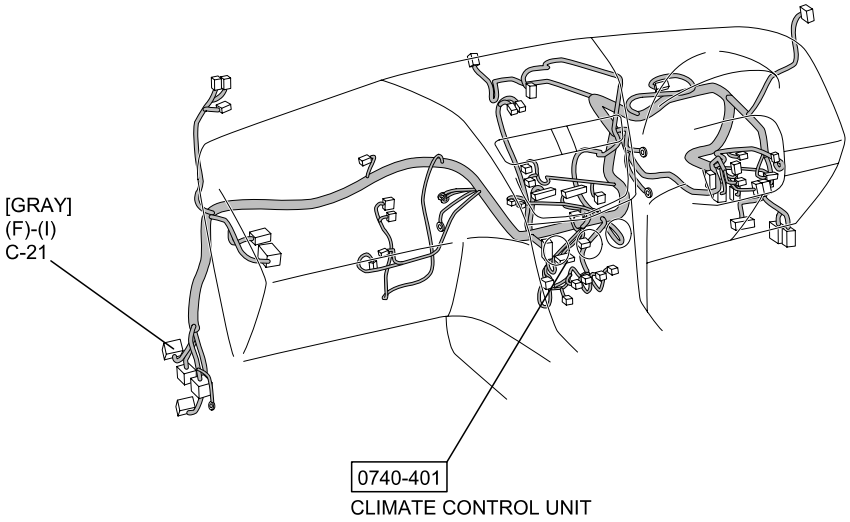

: FRONT HARNESS
: INSTRUMENT PANEL HARNESS

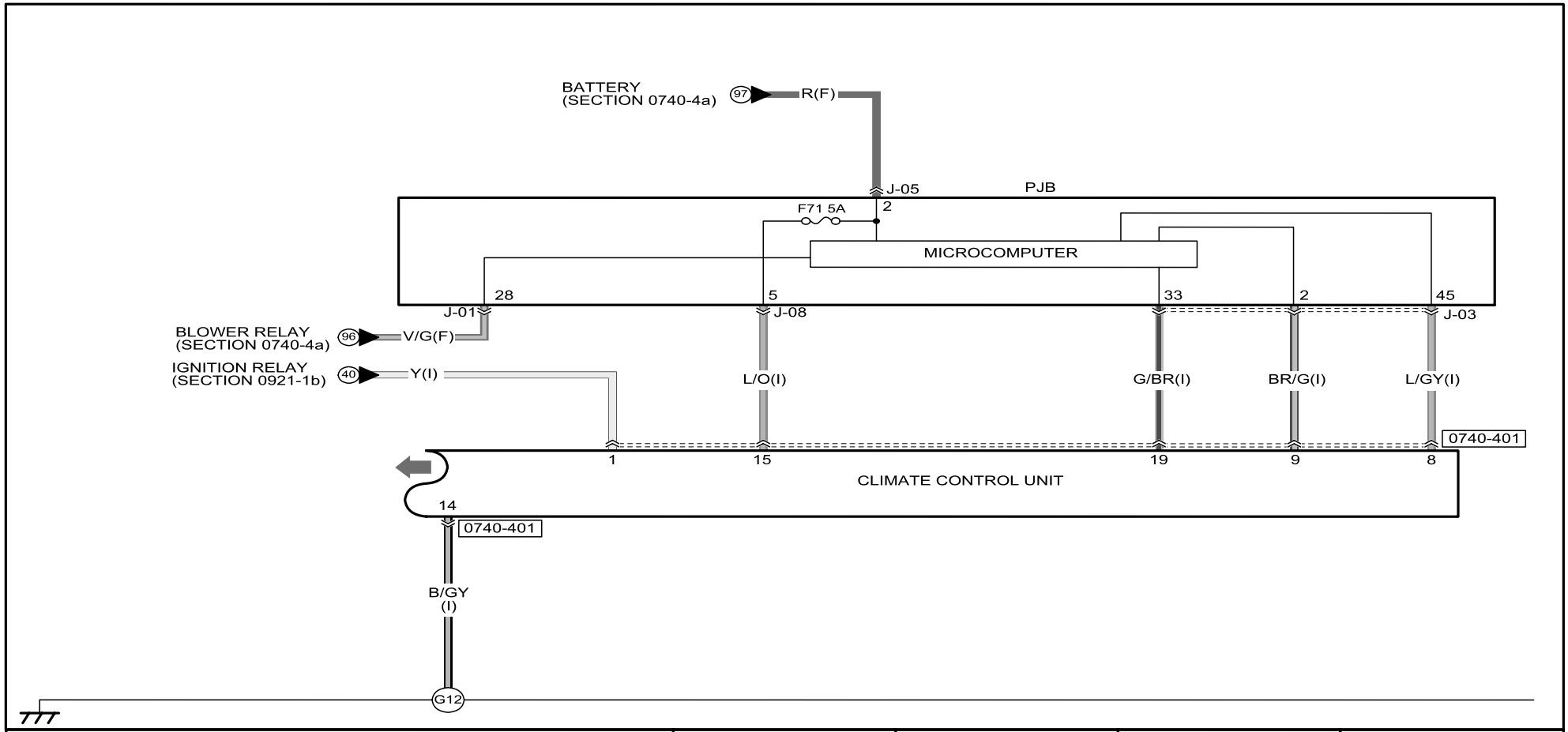

0740-401
CLIMATE CONTROL UNIT

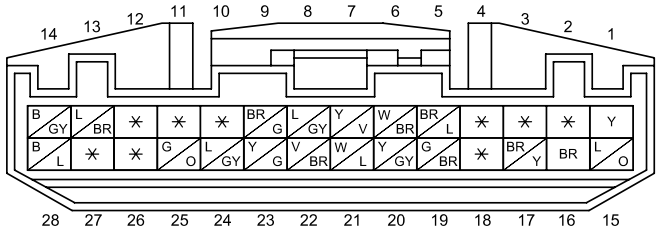

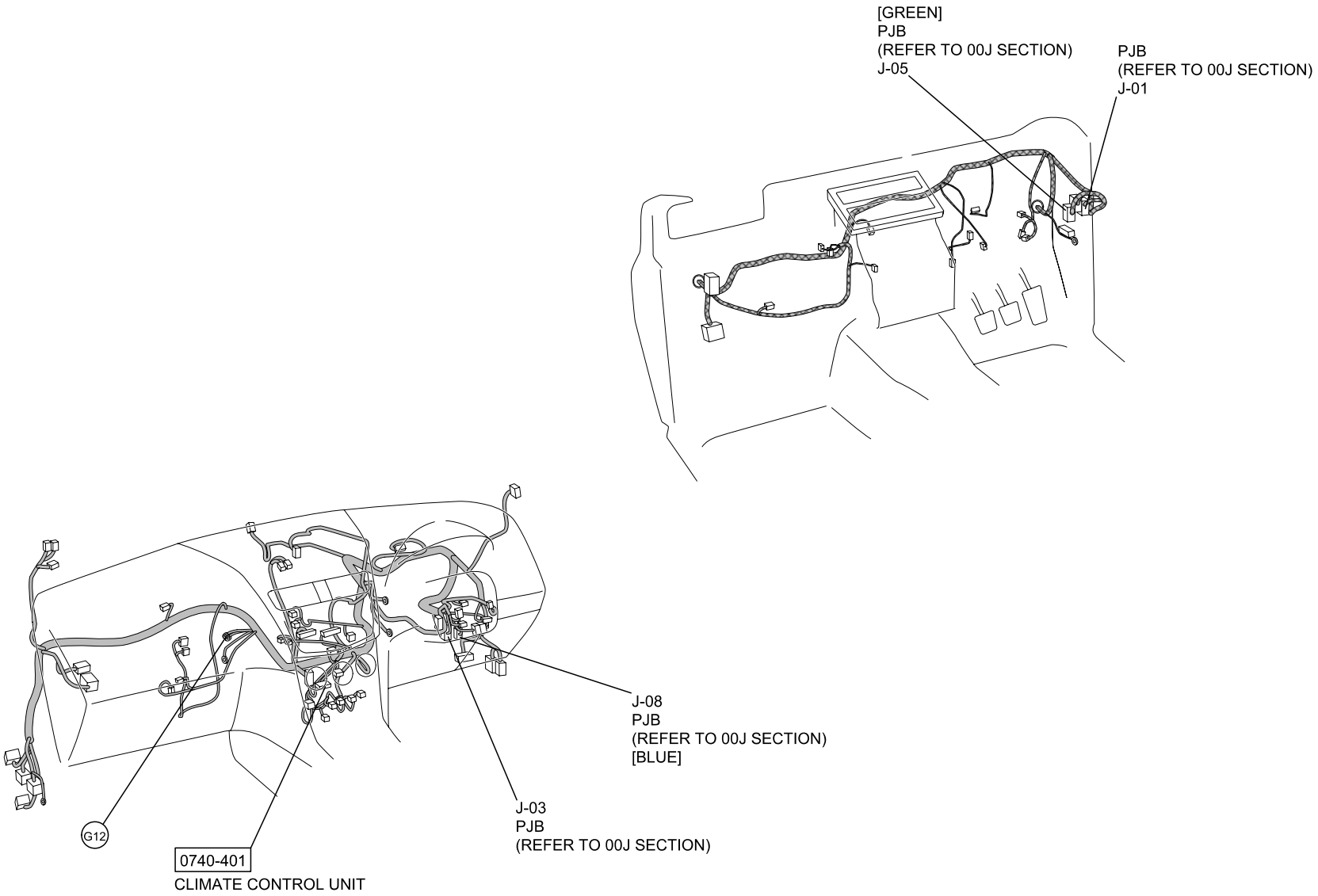

: FRONT HARNESS
: INSTRUMENT PANEL HARNESS

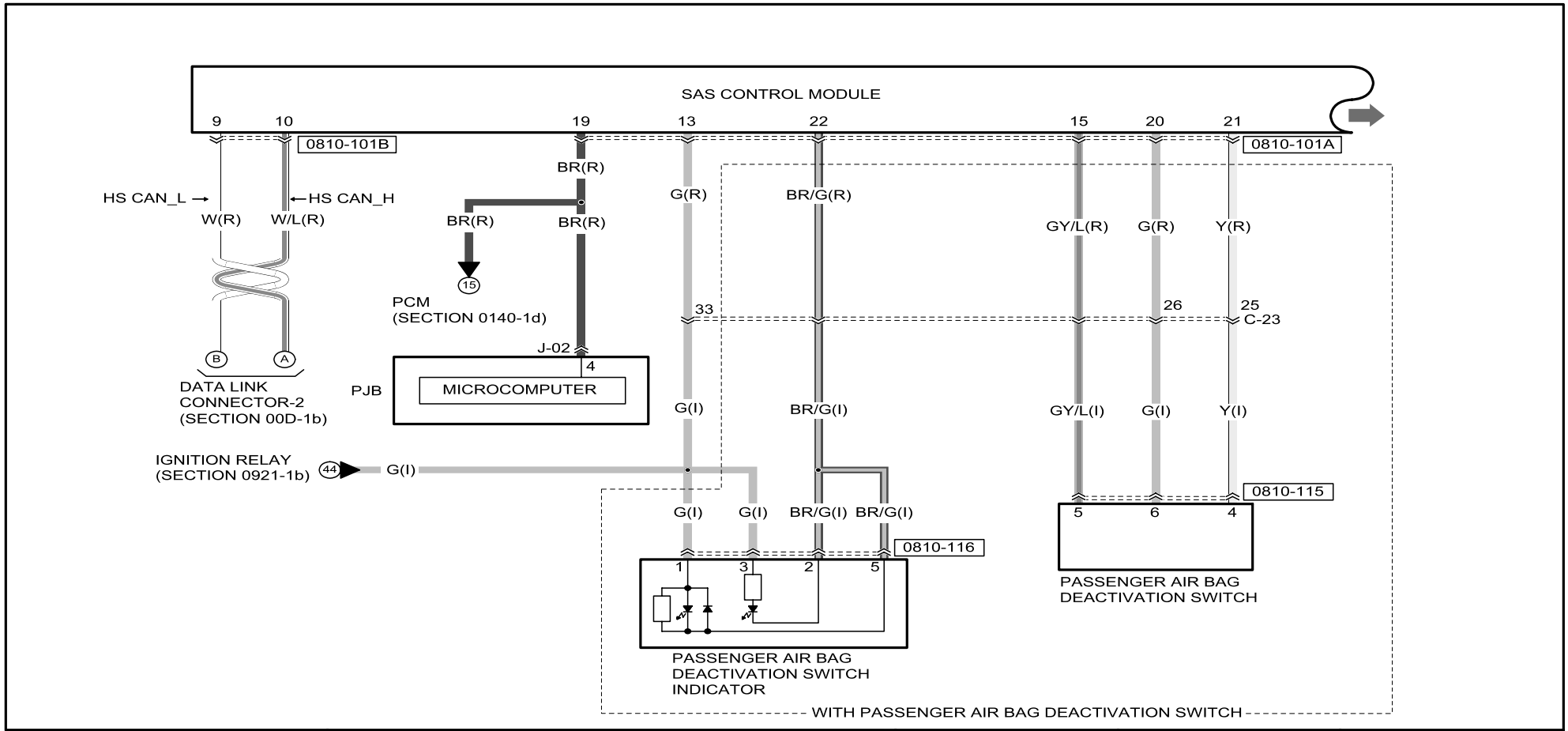

0810-101A
SAS CONTROL MODULE

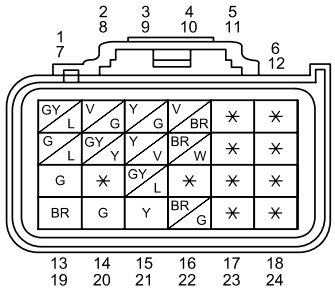

0810-101B
SAS CONTROL MODULE

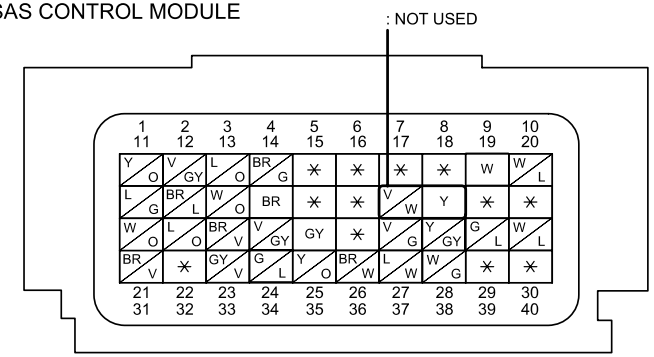

0810-115
PASSENGER AIR BAG
DEACTIVATION SWITCH

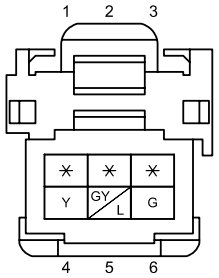

0810-116
PASSENGER AIR BAG
DEACTIVATION SWITCH
INDICATOR

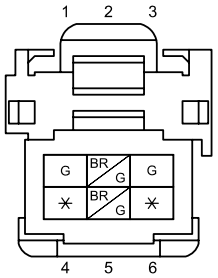

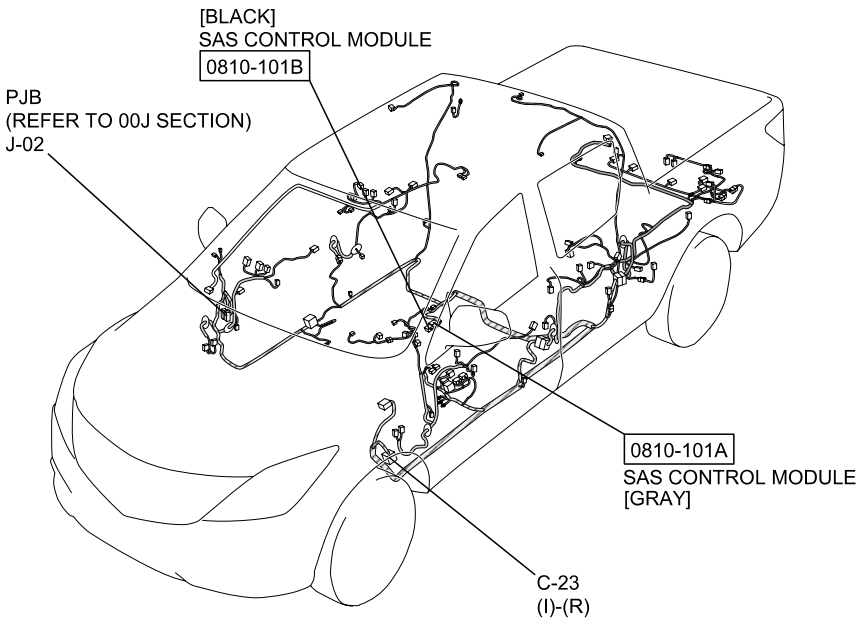

[DOUBLE CAB]

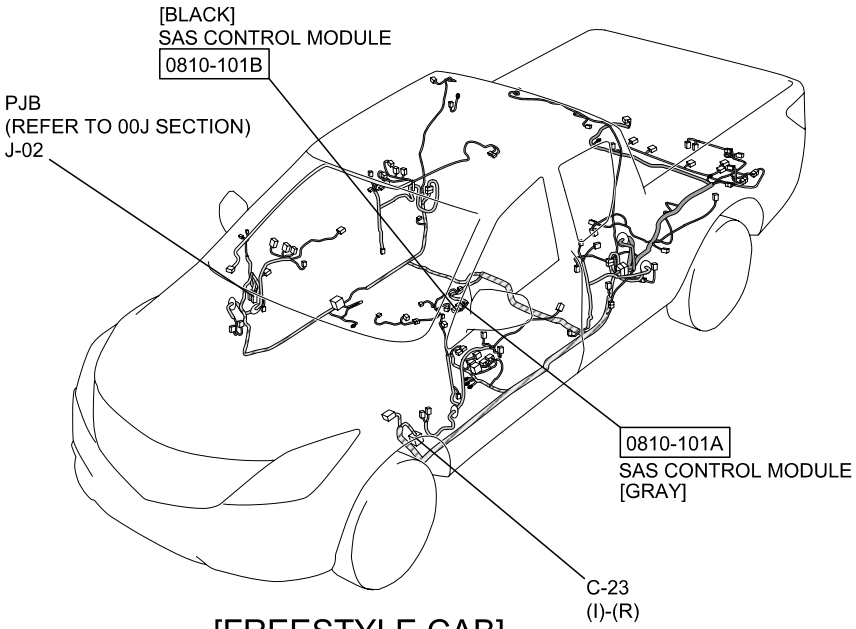

[FREESTYLE CAB]

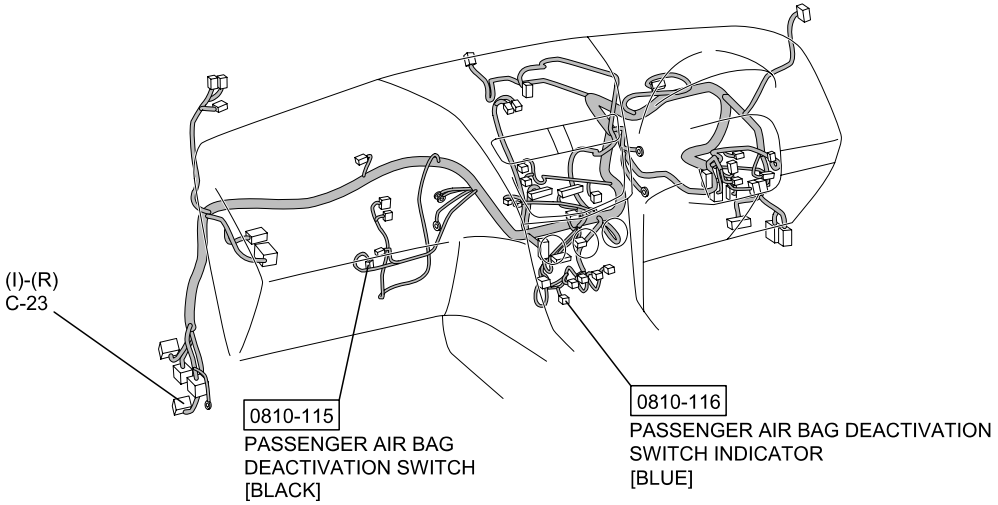

: REAR HARNESS
: REAR NO.2 HARNESS
REAR NO.3 HARNESS
: DOOR HARNESS
: INTERIOR LIGHT HARNESS
: INSTRUMENT PANEL HARNESS

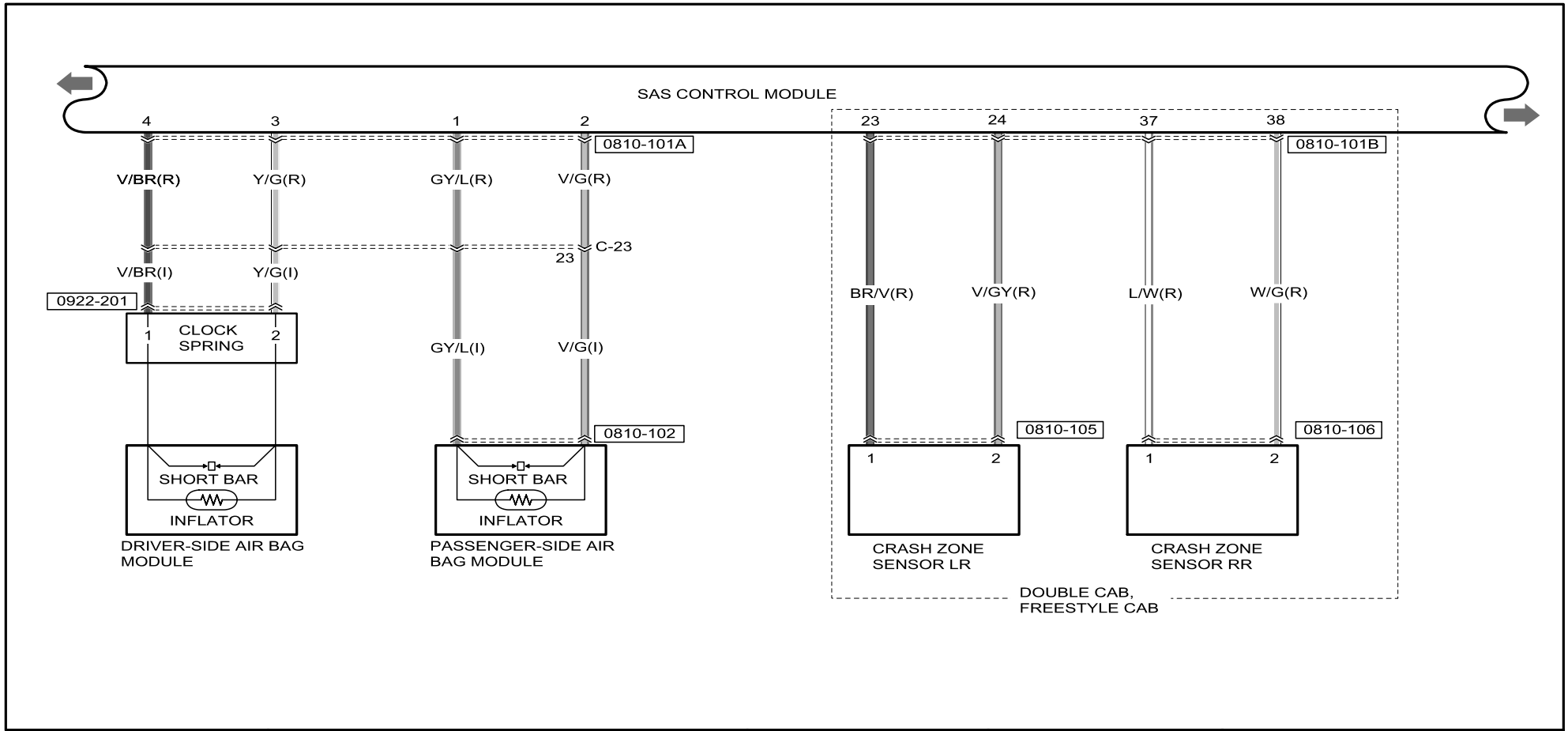

0810-101A
SAS CONTROL MODULE

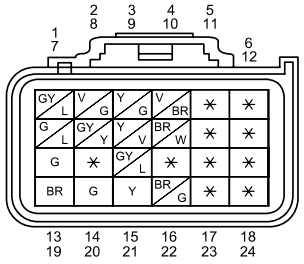

0810-101B
SAS CONTROL MODULE

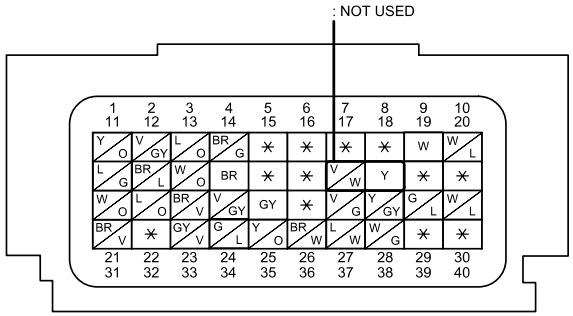

0810-105
CRASH ZONE SENSOR LR

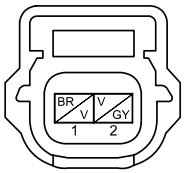

0810-106
CRASH ZONE SENSOR RR

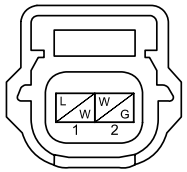

0922-201
INSTRUMENT PANEL HARNESS-CLOCK SPRING

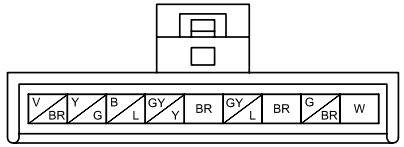

CLOCK SPRING

9	8	7	6	5	4	3	2	1

WIRE COLORS ARE INDICATED BY NUMBERS.

0810-102
PASSENGER-SIDE AIR BAG MODULE

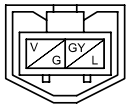

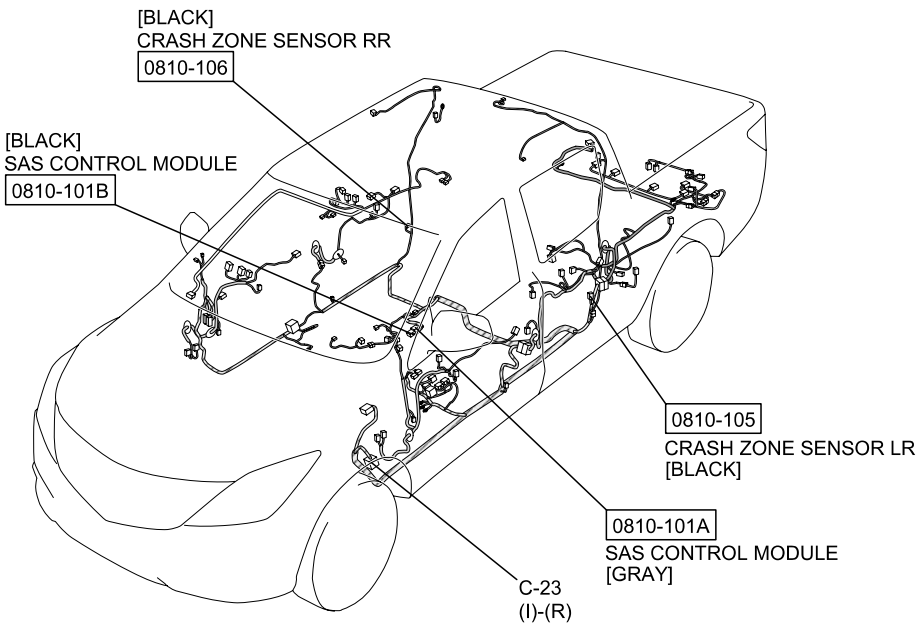

[DOUBLE CAB]

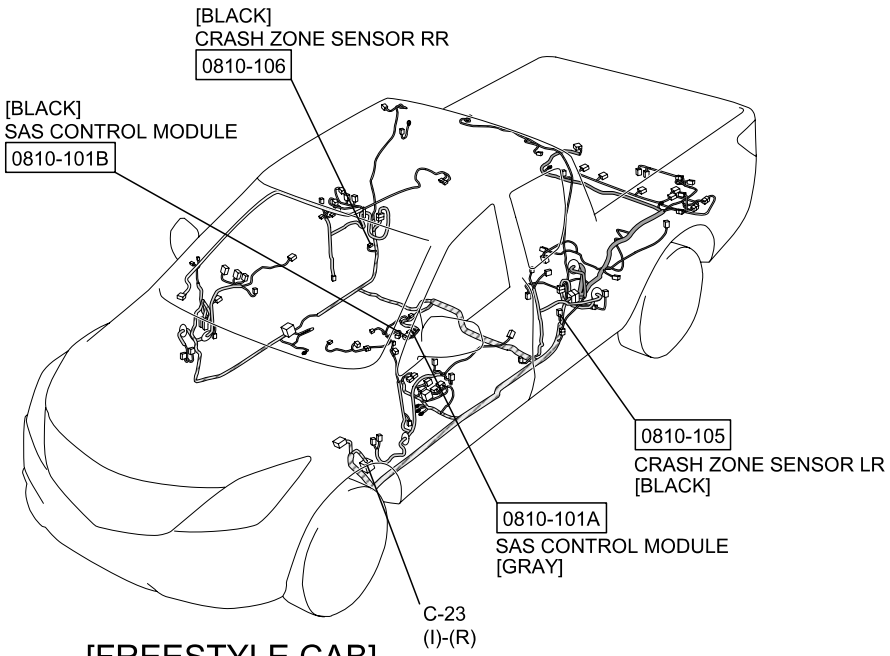

[FREESTYLE CAB]

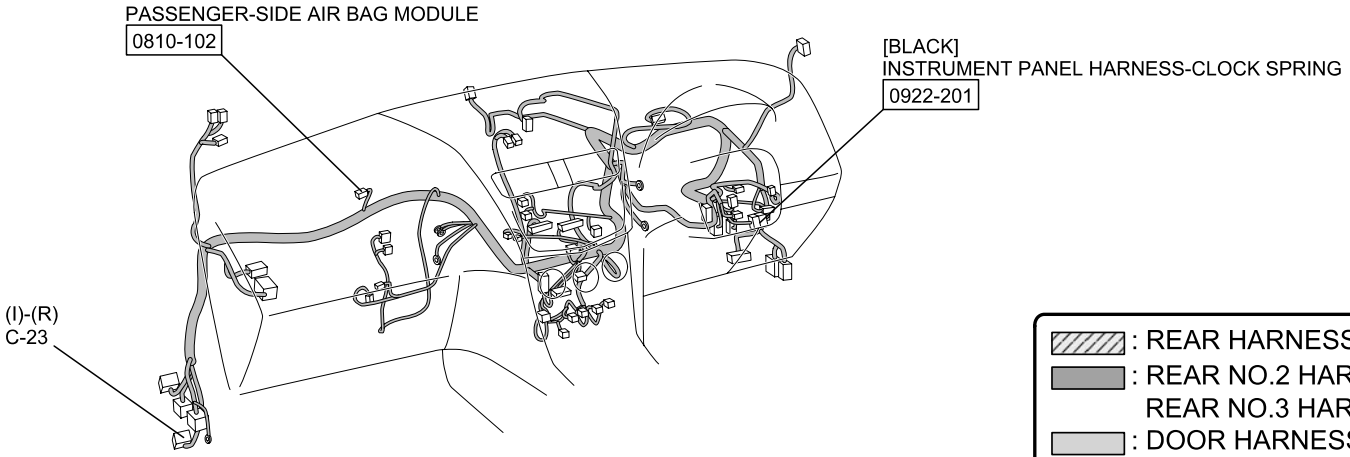

: REAR HARNESS
: REAR NO.2 HARNESS
REAR NO.3 HARNESS
: DOOR HARNESS
: INTERIOR LIGHT HARNESS
: INSTRUMENT PANEL HARNESS

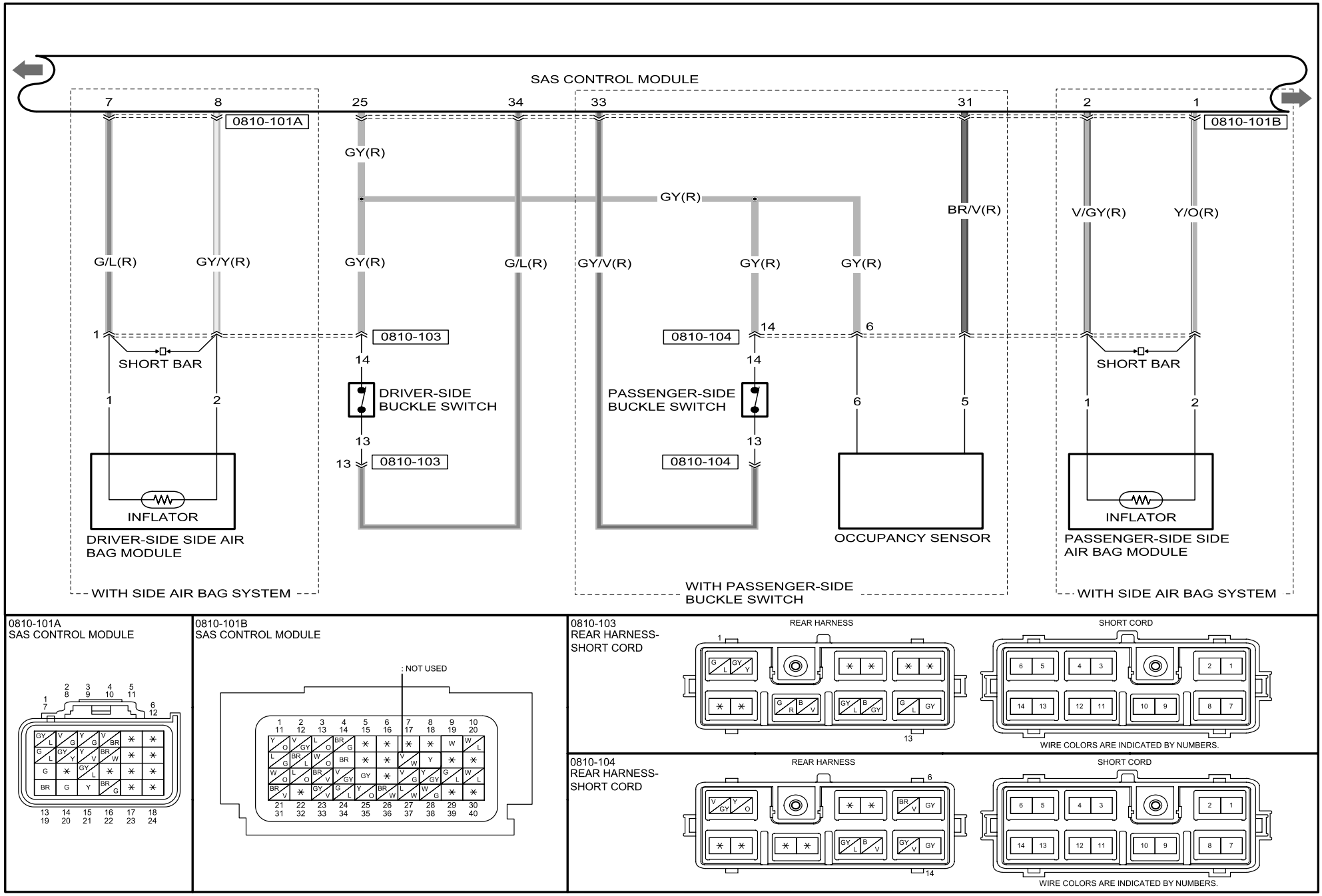
SAS CONTROL MODULE
7
8
25
34
33
31
2
1
0810-101A
0810-101B
GY(R)
GY(R)
BR/V(R)
V/GY(R)
Y/O(R)
G/L(R)
GY/Y(R)
GY(R)
G/L(R)
GY/V(R)
GY(R)
GY(R)
1
0810-103
0810-104
14
6
SHORT BAR
SHORT BAR
14
14
DRIVER-SIDE
BUCKLE SWITCH
PASSENGER-SIDE
BUCKLE SWITCH
1
2
6
5
1
2
13
13
13
0810-103
0810-104
INFLATOR
INFLATOR
DRIVER-SIDE SIDE AIR
BAG MODULE
OCCUPANCY SENSOR
PASSENGER-SIDE SIDE
AIR BAG MODULE
WITH SIDE AIR BAG SYSTEM
WITH PASSENGER-SIDE
BUCKLE SWITCH
WITH SIDE AIR BAG SYSTEM
0810-101A
SAS CONTROL MODULE
0810-101B
SAS CONTROL MODULE
NOT USED
0810-103
REAR HARNESS-
SHORT CORD
REAR HARNESS
SHORT CORD
WIRE COLORS ARE INDICATED BY NUMBERS.
0810-104
REAR HARNESS-
SHORT CORD
REAR HARNESS
SHORT CORD
WIRE COLORS ARE INDICATED BY NUMBERS.

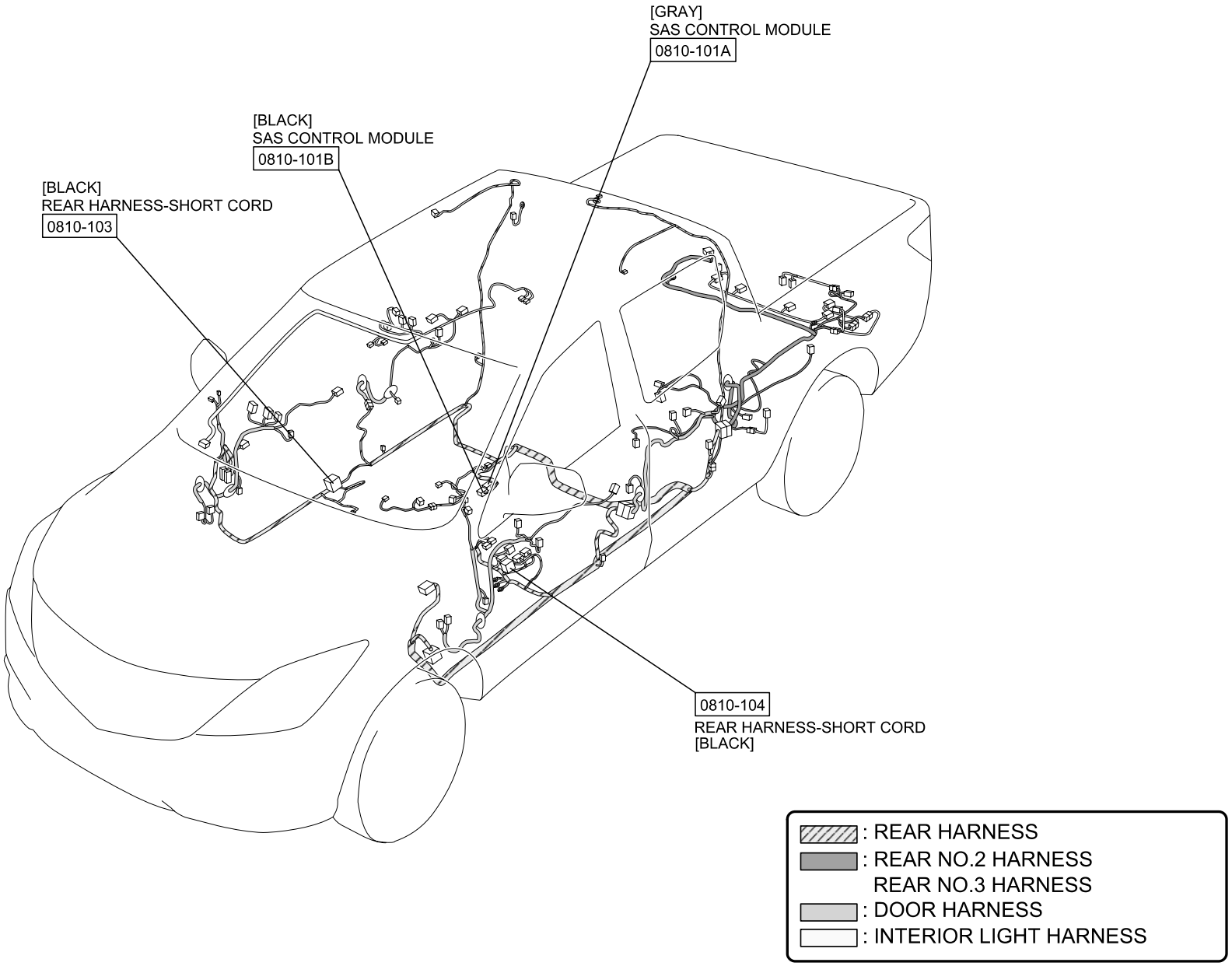
[GRAY]
SAS CONTROL MODULE
0810-101A
[BLACK]
SAS CONTROL MODULE
0810-101B
[BLACK]
REAR HARNESS-SHORT CORD
0810-103
0810-104
REAR HARNESS-SHORT CORD
[BLACK]
: REAR HARNESS
: REAR NO.2 HARNESS
REAR NO.3 HARNESS
: DOOR HARNESS
: INTERIOR LIGHT HARNESS

@ : REGULAR CAB, DOUBLE CAB
# : FREESTYLE CAB

SAS CONTROL MODULE

3 4 13 14 10 9 12 11

0810-101B L/O(R) BR/G(R) W/O(R) BR(R) 0810-101A BR/W(R) Y/V(R) BR/L(R) L/G(R) 0810-101B

BR/G(R) L/O(R) C-18 W/O (DR3) BR(DR3) #

@ L/O(R) BR/G(R) W/O(R) BR(R)

W/O(R) BR(R) C-19 BR/G (DR4) L/O(DR4) #

L/O(R) ← @ W/O(DR3) ← #
BR/G(R) ← @ BR(DR3) ← #
W/O(R) ← @ L/O(DR4) ← #
BR(R) ← @ BR/G(DR4) ← #

0810-107 SHORT BAR INFLATOR
DRIVER-SIDE PRE-TENSIONER SEAT BELT

0810-108 SHORT BAR INFLATOR
PASSENGER-SIDE PRE-TENSIONER SEAT BELT

0810-110 SHORT BAR INFLATOR
PASSENGER-SIDE CURTAIN AIR BAG MODULE

0810-109 SHORT BAR INFLATOR
DRIVER-SIDE CURTAIN AIR BAG MODULE

WITH CURTAIN AIR BAG SYSTEM

0810-101A
SAS CONTROL MODULE

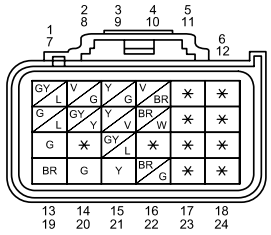

0810-101B
SAS CONTROL MODULE

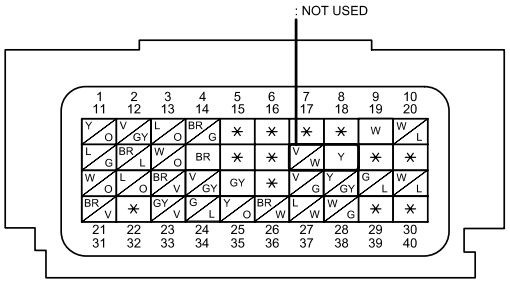

0810-107
DRIVER-SIDE PRE-TENSIONER SEAT BELT

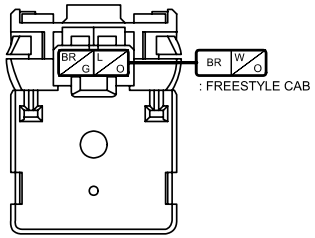

0810-108
PASSENGER-SIDE PRE-TENSIONER SEAT BELT

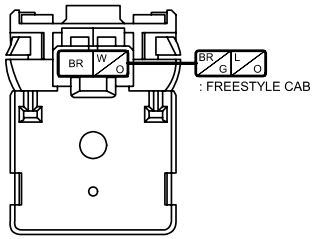

0810-109
DRIVER-SIDE CURTAIN AIR BAG MODULE

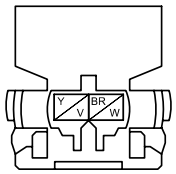

0810-110
PASSENGER-SIDE CURTAIN AIR BAG MODULE

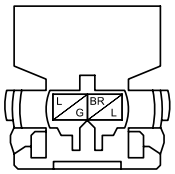

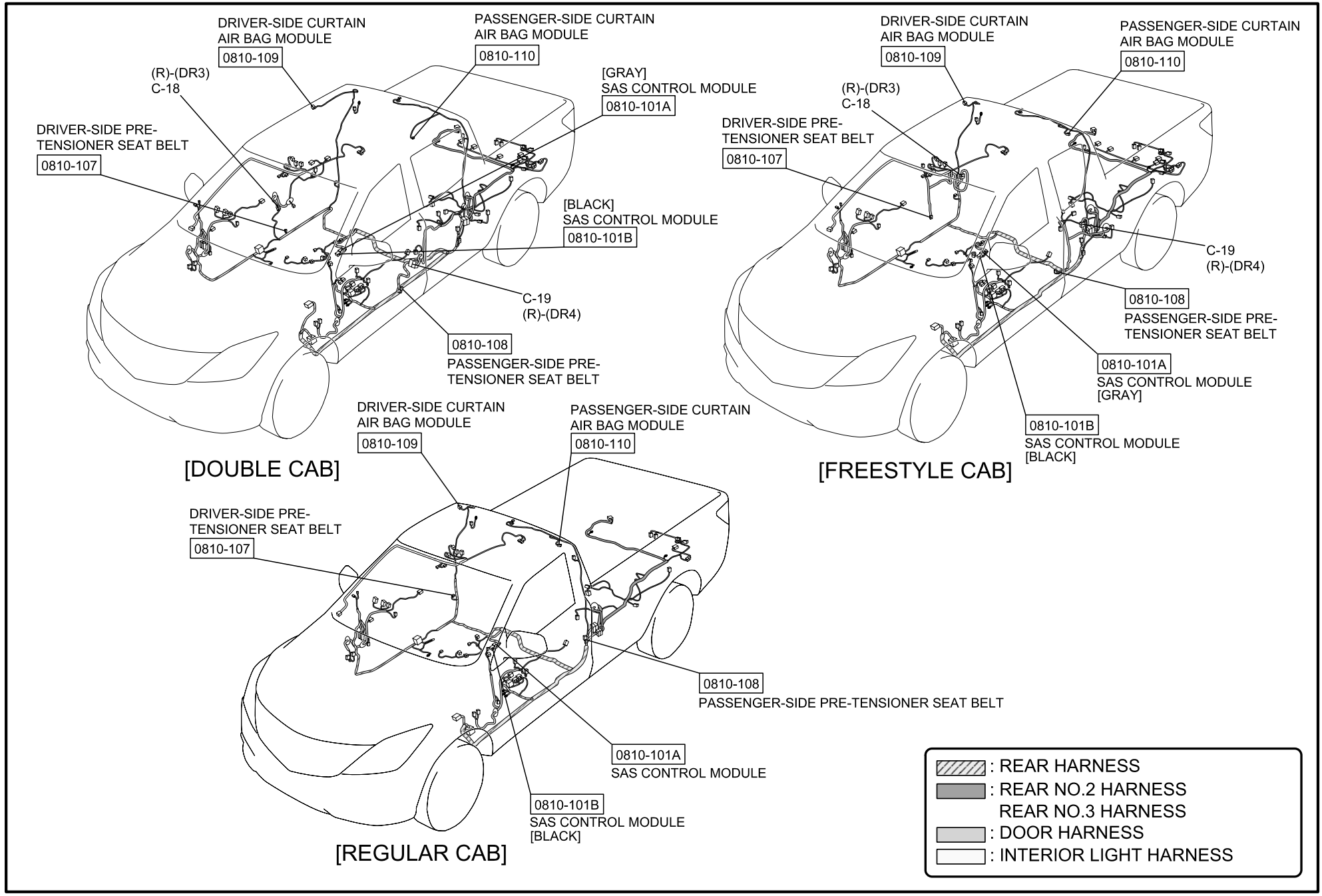
DRIVER-SIDE CURTAIN AIR BAG MODULE
0810-109
PASSENGER-SIDE CURTAIN AIR BAG MODULE
0810-110
(R)-(DR3) C-18
[GRAY] SAS CONTROL MODULE
0810-101A
DRIVER-SIDE PRE-TENSIONER SEAT BELT
0810-107
[BLACK] SAS CONTROL MODULE
0810-101B
C-19 (R)-(DR4)
0810-108
PASSENGER-SIDE PRE-TENSIONER SEAT BELT
[DOUBLE CAB]
DRIVER-SIDE CURTAIN AIR BAG MODULE
0810-109
PASSENGER-SIDE CURTAIN AIR BAG MODULE
0810-110
(R)-(DR3) C-18
DRIVER-SIDE PRE-TENSIONER SEAT BELT
0810-107
C-19 (R)-(DR4)
0810-108
PASSENGER-SIDE PRE-TENSIONER SEAT BELT
0810-101A
SAS CONTROL MODULE [GRAY]
0810-101B
SAS CONTROL MODULE [BLACK]
[FREESTYLE CAB]
DRIVER-SIDE CURTAIN AIR BAG MODULE
0810-109
PASSENGER-SIDE CURTAIN AIR BAG MODULE
0810-110
DRIVER-SIDE PRE-TENSIONER SEAT BELT
0810-107
0810-108
PASSENGER-SIDE PRE-TENSIONER SEAT BELT
0810-101A
SAS CONTROL MODULE
0810-101B
SAS CONTROL MODULE [BLACK]
[REGULAR CAB]
: REAR HARNESS
: REAR NO.2 HARNESS
REAR NO.3 HARNESS
: DOOR HARNESS
: INTERIOR LIGHT HARNESS

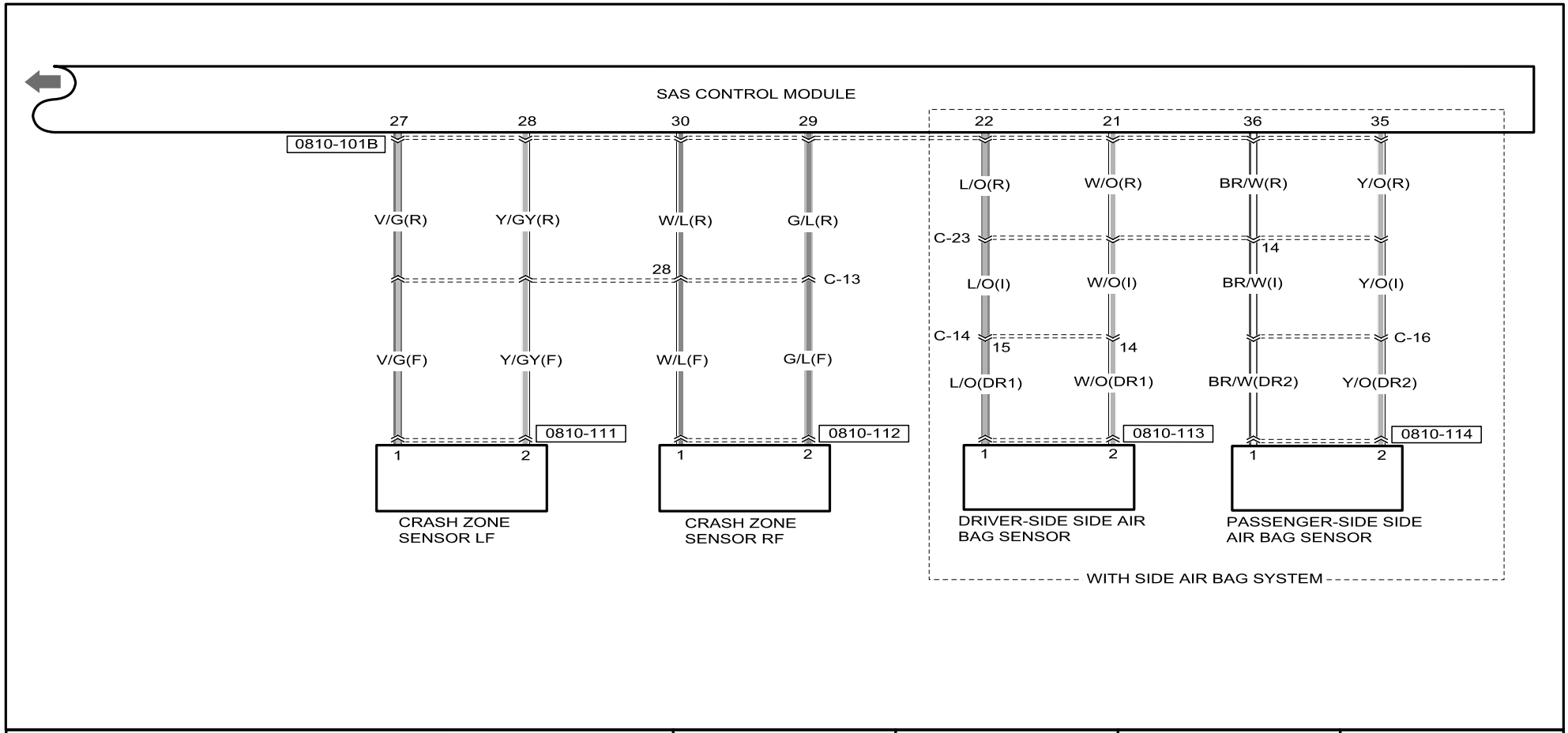

0810-101B
SAS CONTROL MODULE

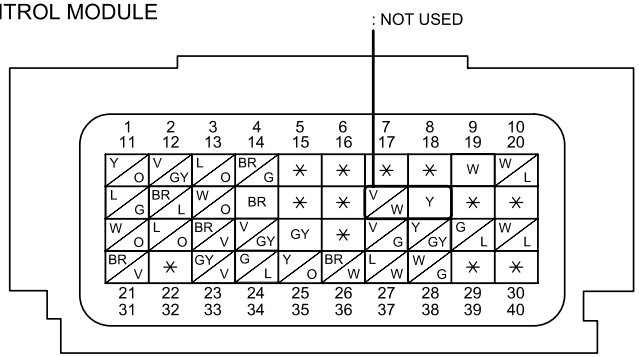

0810-111
CRASH ZONE SENSOR LF

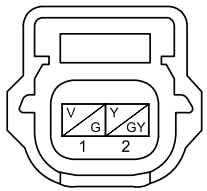

0810-112
CRASH ZONE SENSOR RF

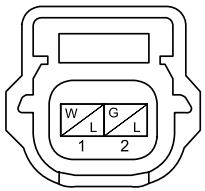

0810-113
DRIVER-SIDE SIDE AIR BAG SENSOR

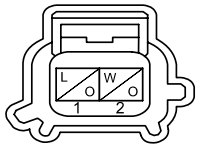

0810-114
PASSENGER-SIDE SIDE AIR BAG SENSOR

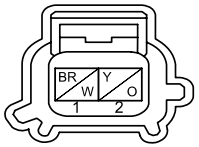

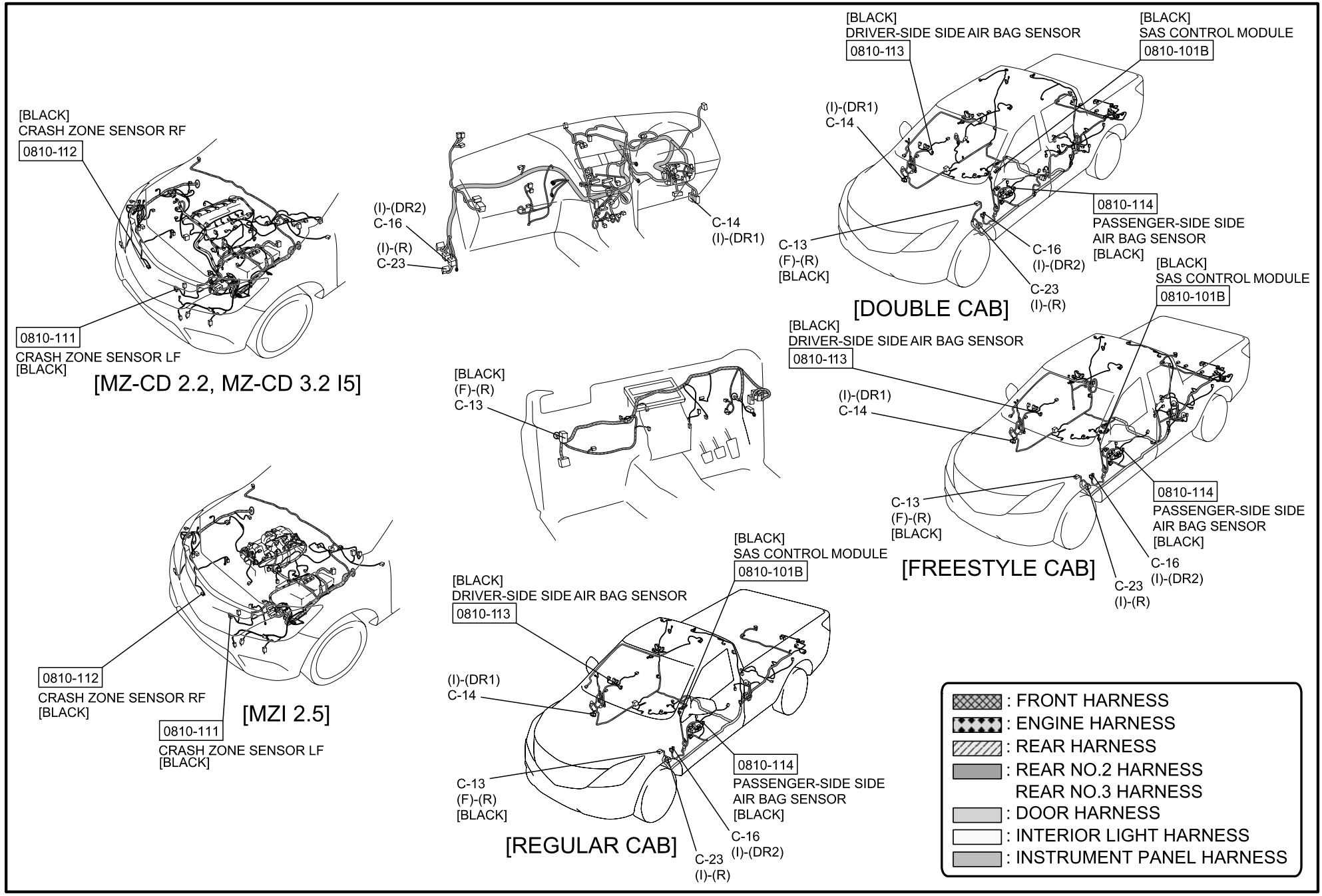
[BLACK]
CRASH ZONE SENSOR RF
0810-112
0810-111
CRASH ZONE SENSOR LF
[BLACK]
[MZ-CD 2.2, MZ-CD 3.2 I5]
(I)-(DR2)
C-16
(I)-(R)
C-23
C-14
(I)-(DR1)
[BLACK]
DRIVER-SIDE SIDE AIR BAG SENSOR
0810-113
[BLACK]
SAS CONTROL MODULE
0810-101B
(I)-(DR1)
C-14
0810-114
PASSENGER-SIDE SIDE
AIR BAG SENSOR
[BLACK]
C-13
(F)-(R)
[BLACK]
C-16
(I)-(DR2)
C-23
(I)-(R)
[DOUBLE CAB]
[BLACK]
(F)-(R)
C-13
[BLACK]
SAS CONTROL MODULE
0810-101B
[BLACK]
DRIVER-SIDE SIDE AIR BAG SENSOR
0810-113
(I)-(DR1)
C-14
C-13
(F)-(R)
[BLACK]
0810-114
PASSENGER-SIDE SIDE
AIR BAG SENSOR
[BLACK]
C-16
(I)-(DR2)
C-23
(I)-(R)
[FREESTYLE CAB]
0810-112
CRASH ZONE SENSOR RF
[BLACK]
0810-111
CRASH ZONE SENSOR LF
[BLACK]
[MZI 2.5]
[BLACK]
SAS CONTROL MODULE
0810-101B
[BLACK]
DRIVER-SIDE SIDE AIR BAG SENSOR
0810-113
(I)-(DR1)
C-14
C-13
(F)-(R)
[BLACK]
0810-114
PASSENGER-SIDE SIDE
AIR BAG SENSOR
[BLACK]
C-16
(I)-(DR2)
C-23
(I)-(R)
[REGULAR CAB]
: FRONT HARNESS
: ENGINE HARNESS
: REAR HARNESS
: REAR NO.2 HARNESS
REAR NO.3 HARNESS
: DOOR HARNESS
: INTERIOR LIGHT HARNESS
: INSTRUMENT PANEL HARNESS

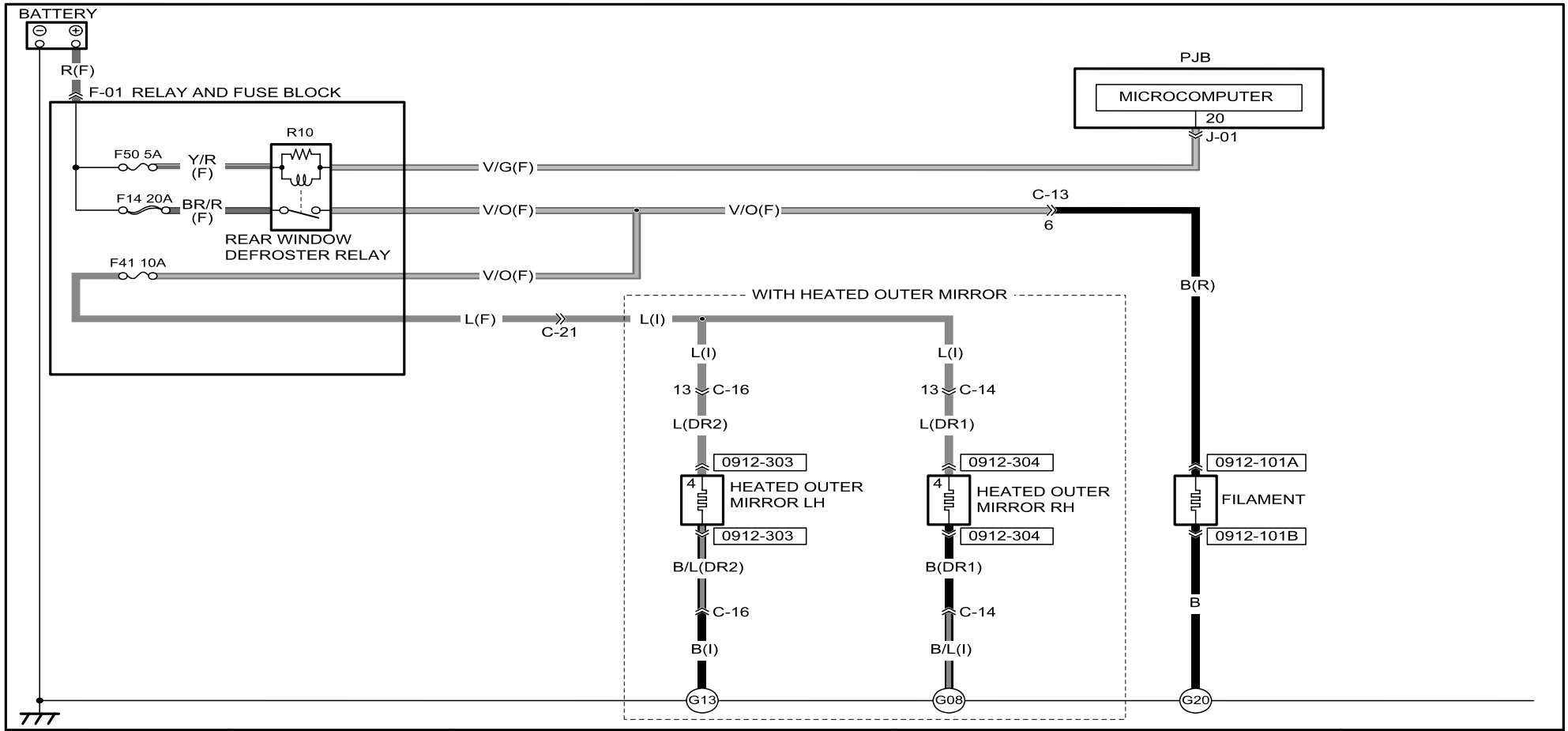

0912-101A FILAMENT	0912-101B FILAMENT	0912-303 POWER OUTER MIRROR LH / RETRACTABLE OUTER MIRROR LH / SIDE TURN LIGHT (OUTER MIRROR TYPE) LH / HEATED OUTER MIRROR LH	0912-304 POWER OUTER MIRROR RH / RETRACTABLE OUTER MIRROR RH / SIDE TURN LIGHT (OUTER MIRROR TYPE) RH / HEATED OUTER MIRROR RH	
B	B	4 / 8	4 / 8	

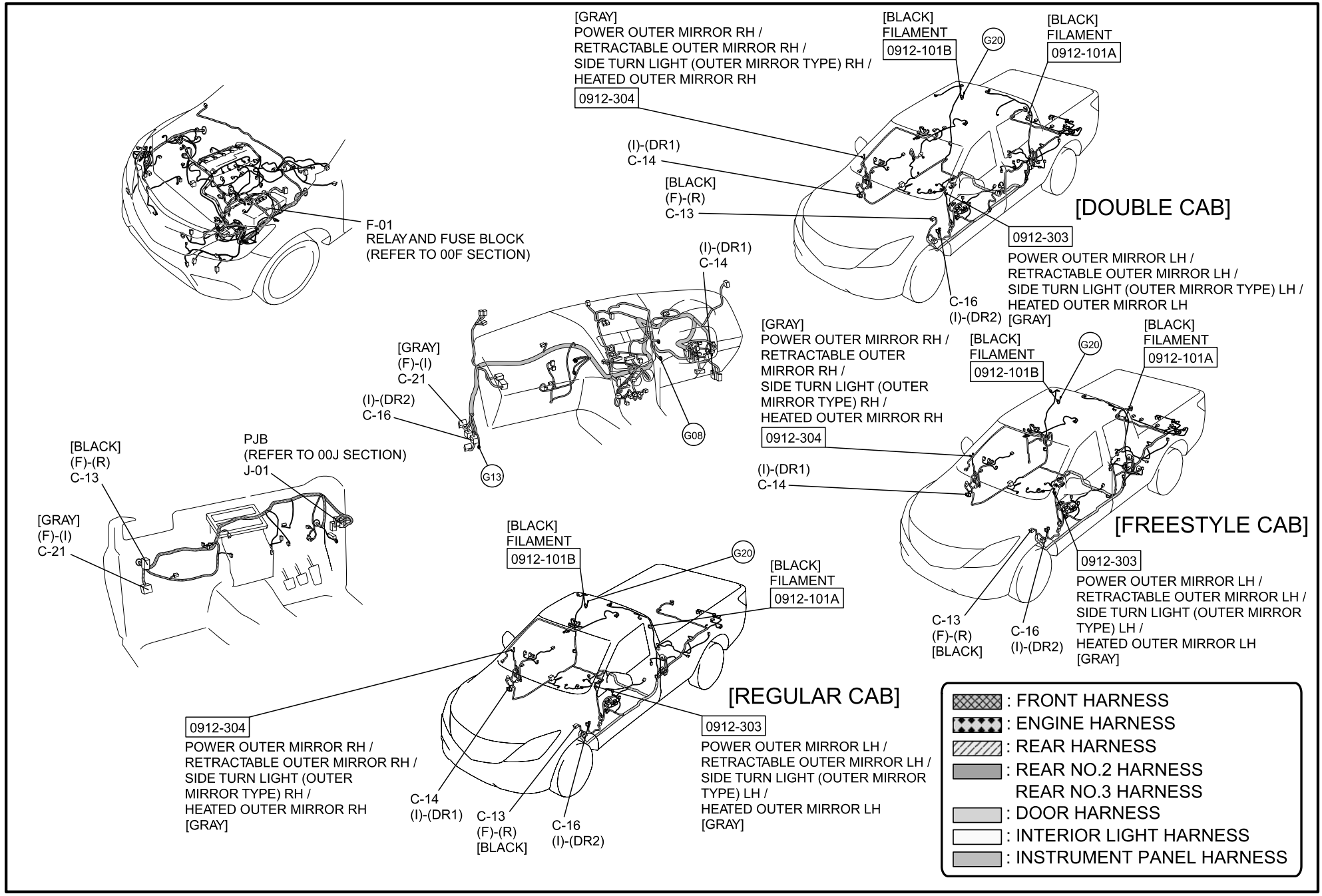
[GRAY]
POWER OUTER MIRROR RH /
RETRACTABLE OUTER MIRROR RH /
SIDE TURN LIGHT (OUTER MIRROR TYPE) RH /
HEATED OUTER MIRROR RH
0912-304
[BLACK]
FILAMENT
0912-101B
G20
[BLACK]
FILAMENT
0912-101A
(I)-(DR1)
C-14
[BLACK]
(F)-(R)
C-13
[DOUBLE CAB]
0912-303
POWER OUTER MIRROR LH /
RETRACTABLE OUTER MIRROR LH /
SIDE TURN LIGHT (OUTER MIRROR TYPE) LH /
HEATED OUTER MIRROR LH
[GRAY]
C-16
(I)-(DR2)
F-01
RELAY AND FUSE BLOCK
(REFER TO 00F SECTION)
(I)-(DR1)
C-14
[GRAY]
(F)-(I)
C-21
(I)-(DR2)
C-16
G08
G13
[GRAY]
POWER OUTER MIRROR RH /
RETRACTABLE OUTER
MIRROR RH /
SIDE TURN LIGHT (OUTER
MIRROR TYPE) RH /
HEATED OUTER MIRROR RH
0912-304
[BLACK]
FILAMENT
0912-101B
G20
[BLACK]
FILAMENT
0912-101A
(I)-(DR1)
C-14
[FREESTYLE CAB]
0912-303
POWER OUTER MIRROR LH /
RETRACTABLE OUTER MIRROR LH /
SIDE TURN LIGHT (OUTER MIRROR
TYPE) LH /
HEATED OUTER MIRROR LH
[GRAY]
C-13
(F)-(R)
[BLACK]
C-16
(I)-(DR2)
[BLACK]
(F)-(R)
C-13
PJB
(REFER TO 00J SECTION)
J-01
[GRAY]
(F)-(I)
C-21
[BLACK]
FILAMENT
0912-101B
G20
[BLACK]
FILAMENT
0912-101A
[REGULAR CAB]
0912-304
POWER OUTER MIRROR RH /
RETRACTABLE OUTER MIRROR RH /
SIDE TURN LIGHT (OUTER
MIRROR TYPE) RH /
HEATED OUTER MIRROR RH
[GRAY]
0912-303
POWER OUTER MIRROR LH /
RETRACTABLE OUTER MIRROR LH /
SIDE TURN LIGHT (OUTER MIRROR
TYPE) LH /
HEATED OUTER MIRROR LH
[GRAY]
C-14
(I)-(DR1)
C-13
(F)-(R)
[BLACK]
C-16
(I)-(DR2)
: FRONT HARNESS
: ENGINE HARNESS
: REAR HARNESS
: REAR NO.2 HARNESS
REAR NO.3 HARNESS
: DOOR HARNESS
: INTERIOR LIGHT HARNESS
: INSTRUMENT PANEL HARNESS

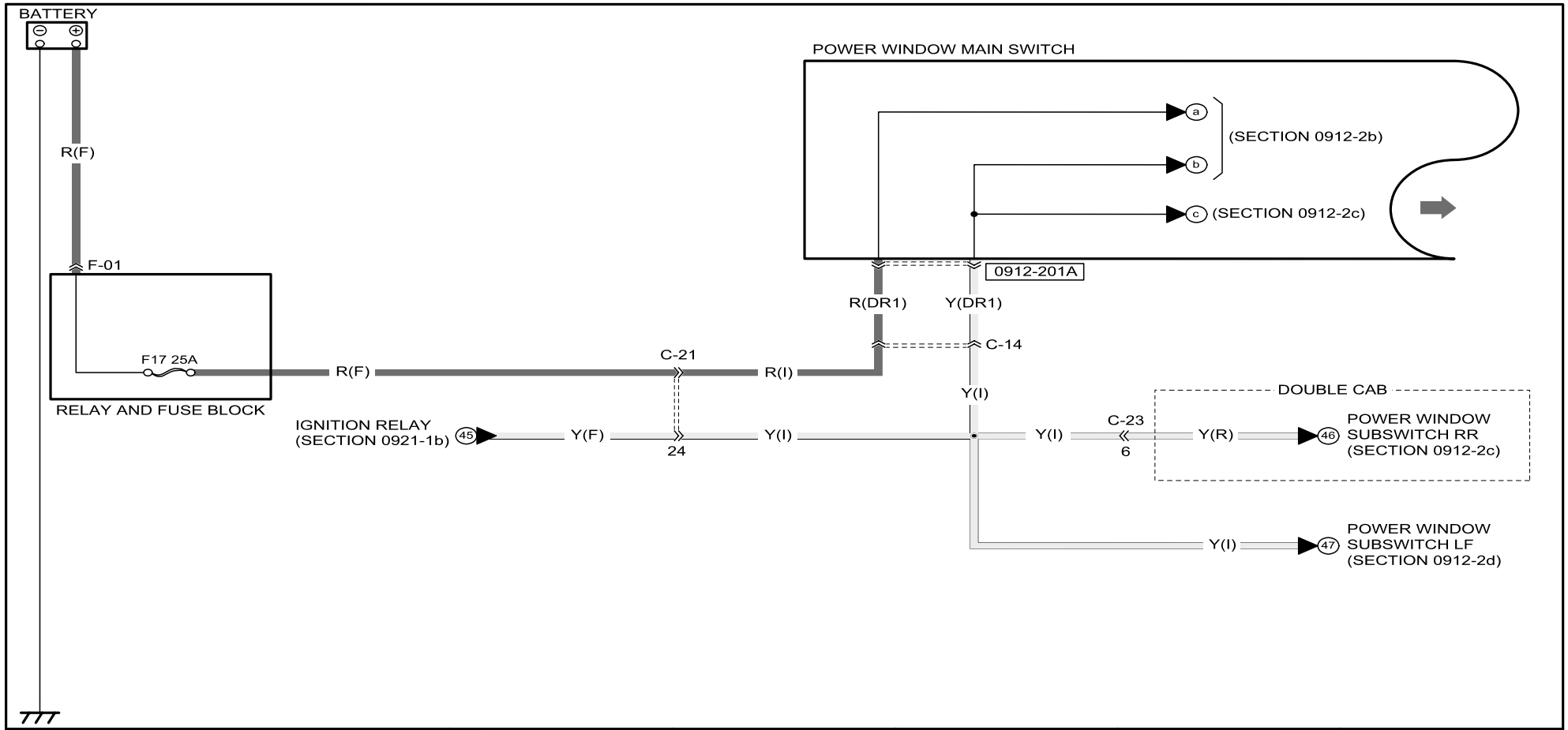

0912-201A
POWER WINDOW MAIN SWITCH

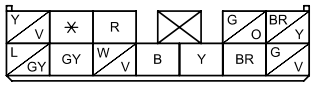

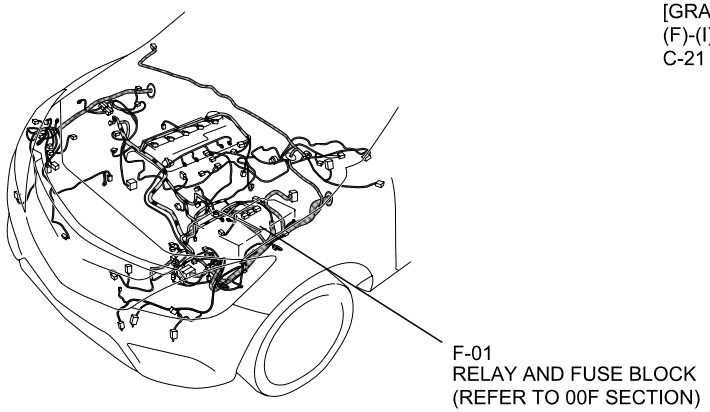

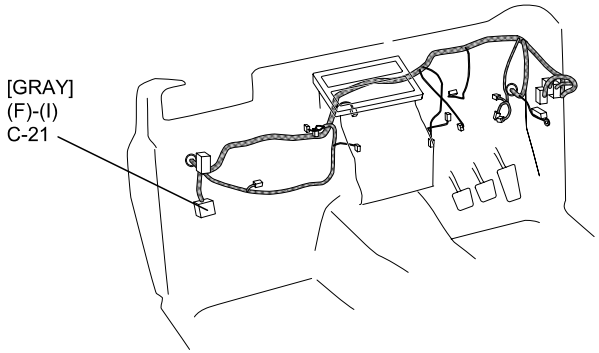

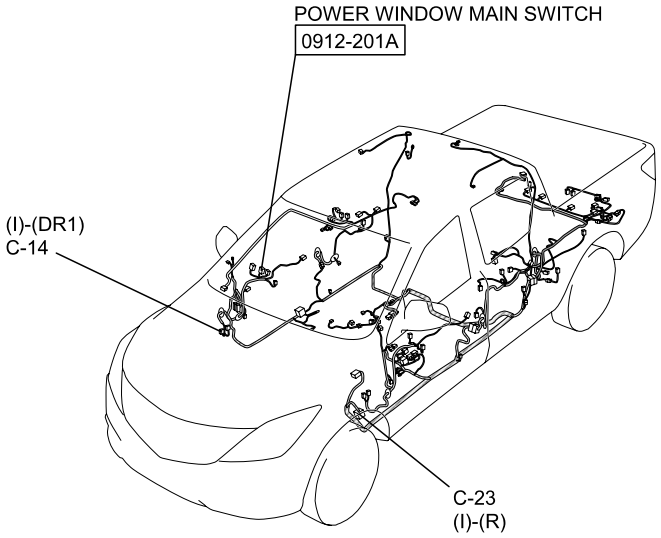

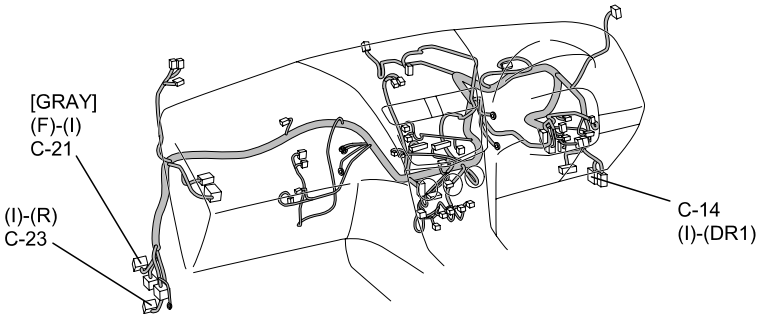

: FRONT HARNESS
: ENGINE HARNESS
: REAR HARNESS
: REAR NO.2 HARNESS
REAR NO.3 HARNESS
: DOOR HARNESS
: INTERIOR LIGHT HARNESS
: INSTRUMENT PANEL HARNESS

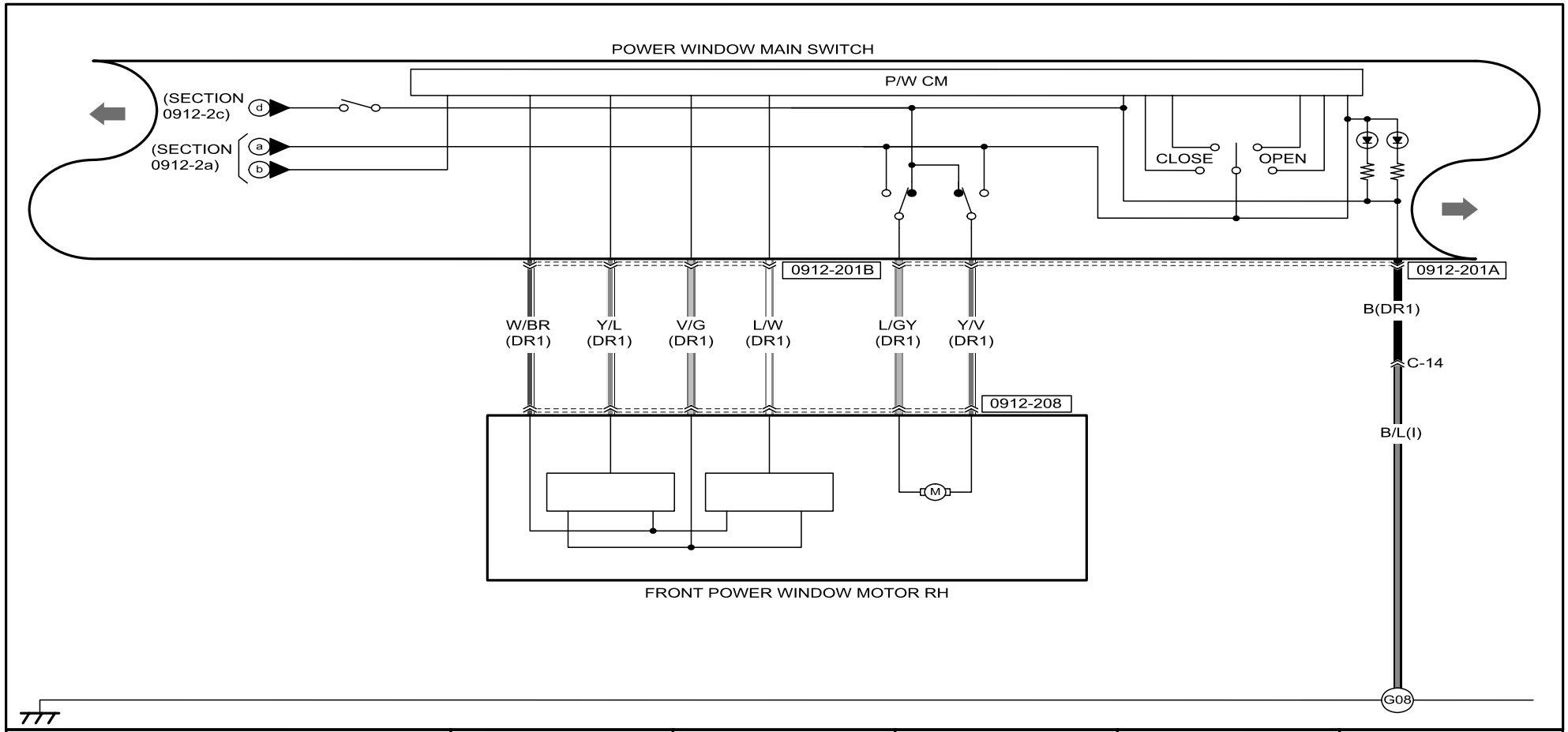

0912-201A
POWER WINDOW MAIN SWITCH

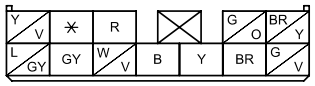

0912-201B
POWER WINDOW MAIN SWITCH

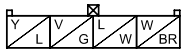

0912-208
FRONT POWER WINDOW MOTOR RH

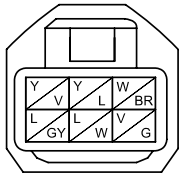

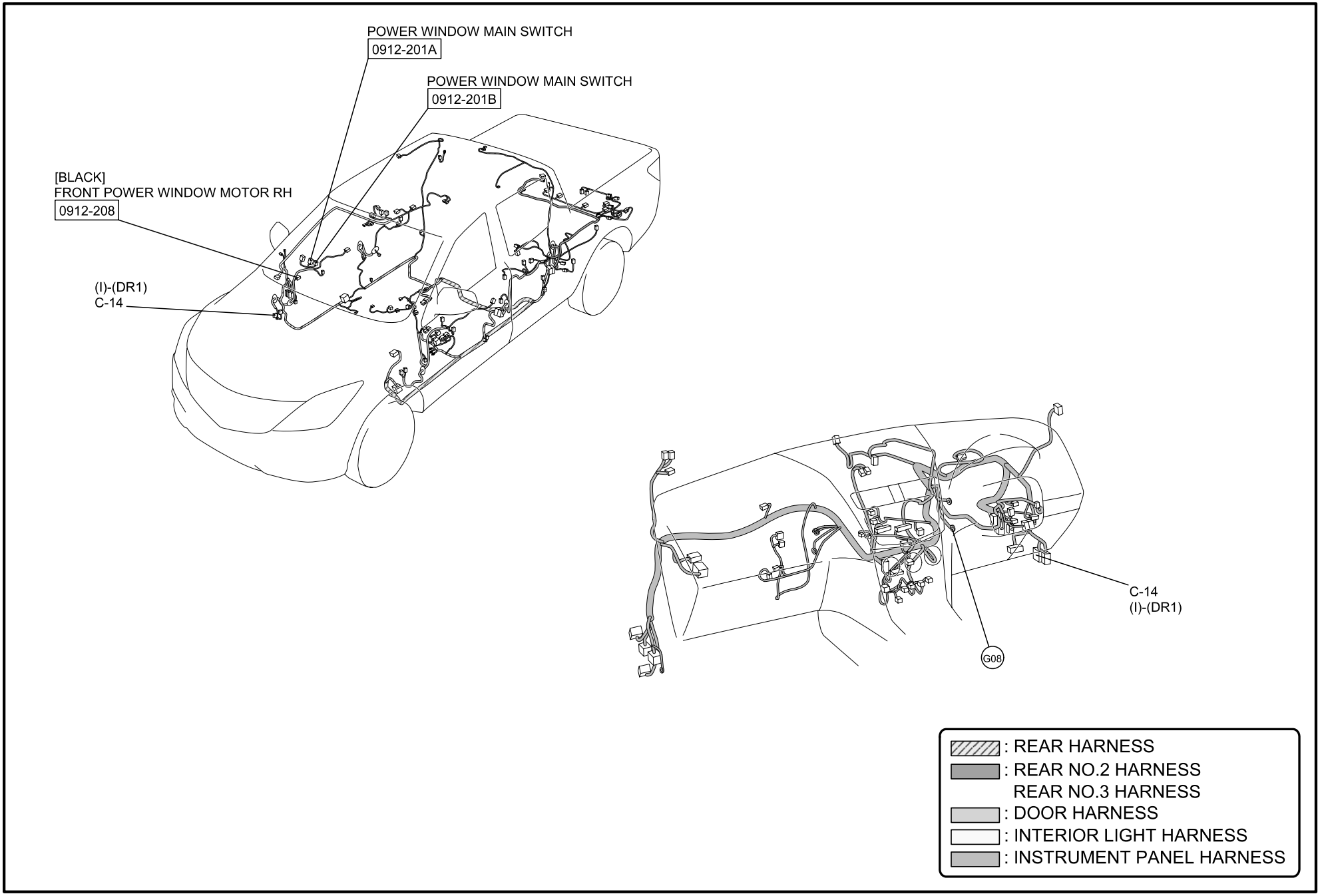
POWER WINDOW MAIN SWITCH
0912-201A
POWER WINDOW MAIN SWITCH
0912-201B
[BLACK]
FRONT POWER WINDOW MOTOR RH
0912-208
(I)-(DR1)
C-14
C-14
(I)-(DR1)
G08
: REAR HARNESS
: REAR NO.2 HARNESS
REAR NO.3 HARNESS
: DOOR HARNESS
: INTERIOR LIGHT HARNESS
: INSTRUMENT PANEL HARNESS

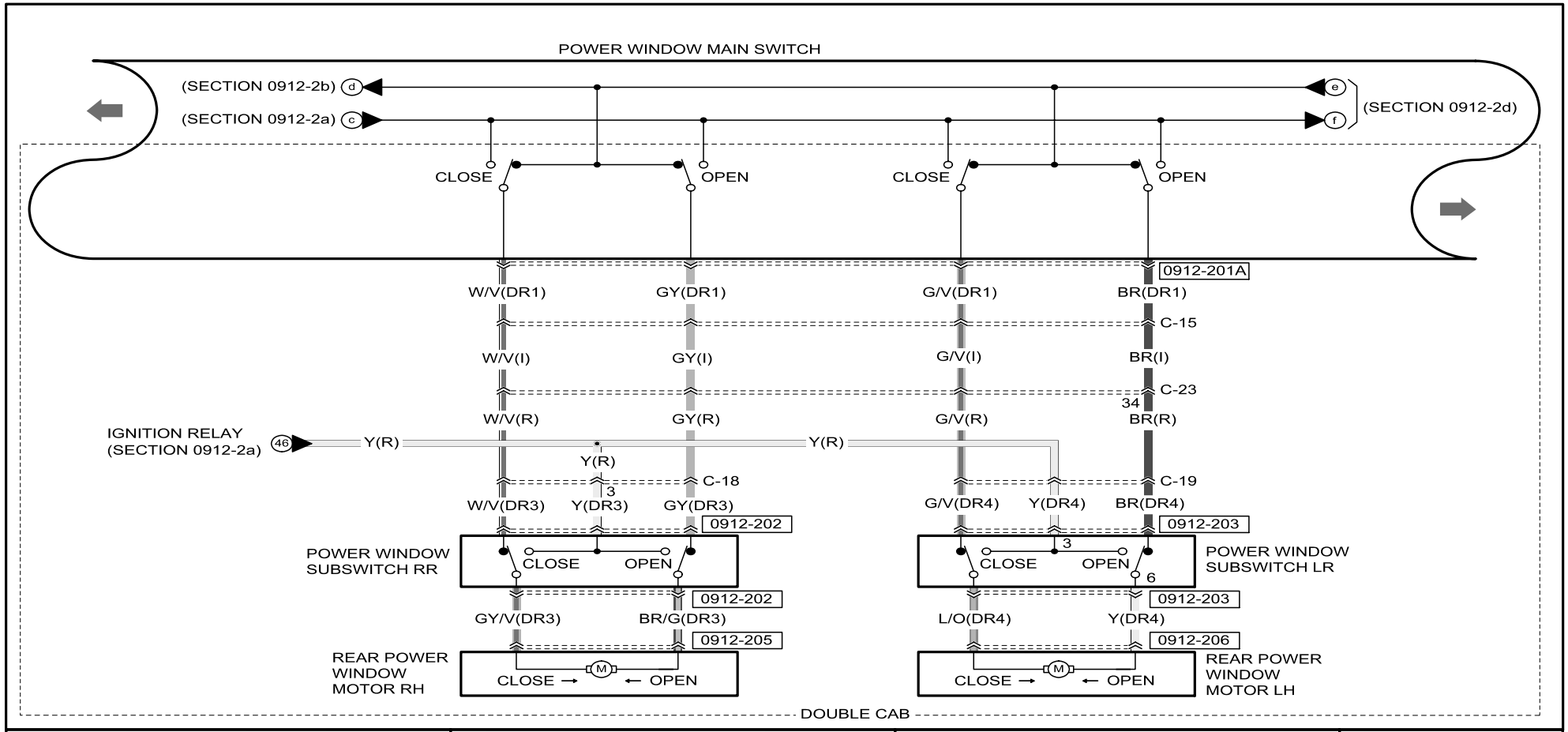

0912-201A
POWER WINDOW MAIN SWITCH

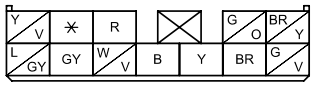

0912-202
POWER WINDOW SUBSWITCH RR

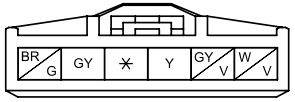

0912-205
REAR POWER
WINDOW MOTOR RH

0912-203
POWER WINDOW SUBSWITCH LR

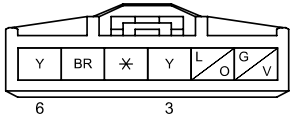

0912-206
REAR POWER
WINDOW MOTOR LH

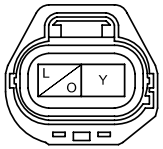

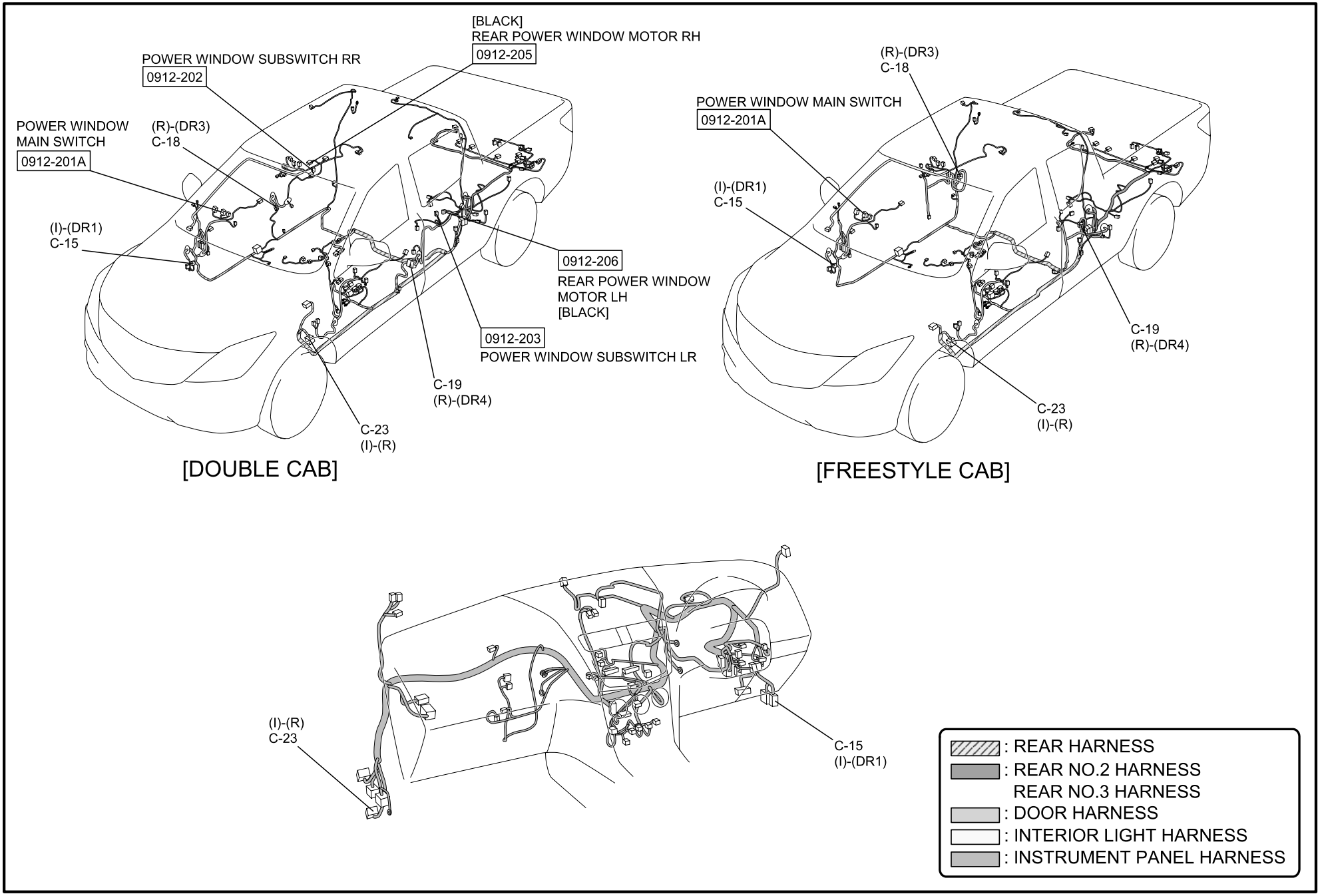
[BLACK]
REAR POWER WINDOW MOTOR RH
0912-205
POWER WINDOW SUBSWITCH RR
0912-202
POWER WINDOW
MAIN SWITCH
0912-201A
(R)-(DR3)
C-18
(I)-(DR1)
C-15
0912-206
REAR POWER WINDOW
MOTOR LH
[BLACK]
0912-203
POWER WINDOW SUBSWITCH LR
C-19
(R)-(DR4)
C-23
(I)-(R)
[DOUBLE CAB]
(R)-(DR3)
C-18
POWER WINDOW MAIN SWITCH
0912-201A
(I)-(DR1)
C-15
C-19
(R)-(DR4)
C-23
(I)-(R)
[FREESTYLE CAB]
(I)-(R)
C-23
C-15
(I)-(DR1)
: REAR HARNESS
: REAR NO.2 HARNESS
REAR NO.3 HARNESS
: DOOR HARNESS
: INTERIOR LIGHT HARNESS
: INSTRUMENT PANEL HARNESS

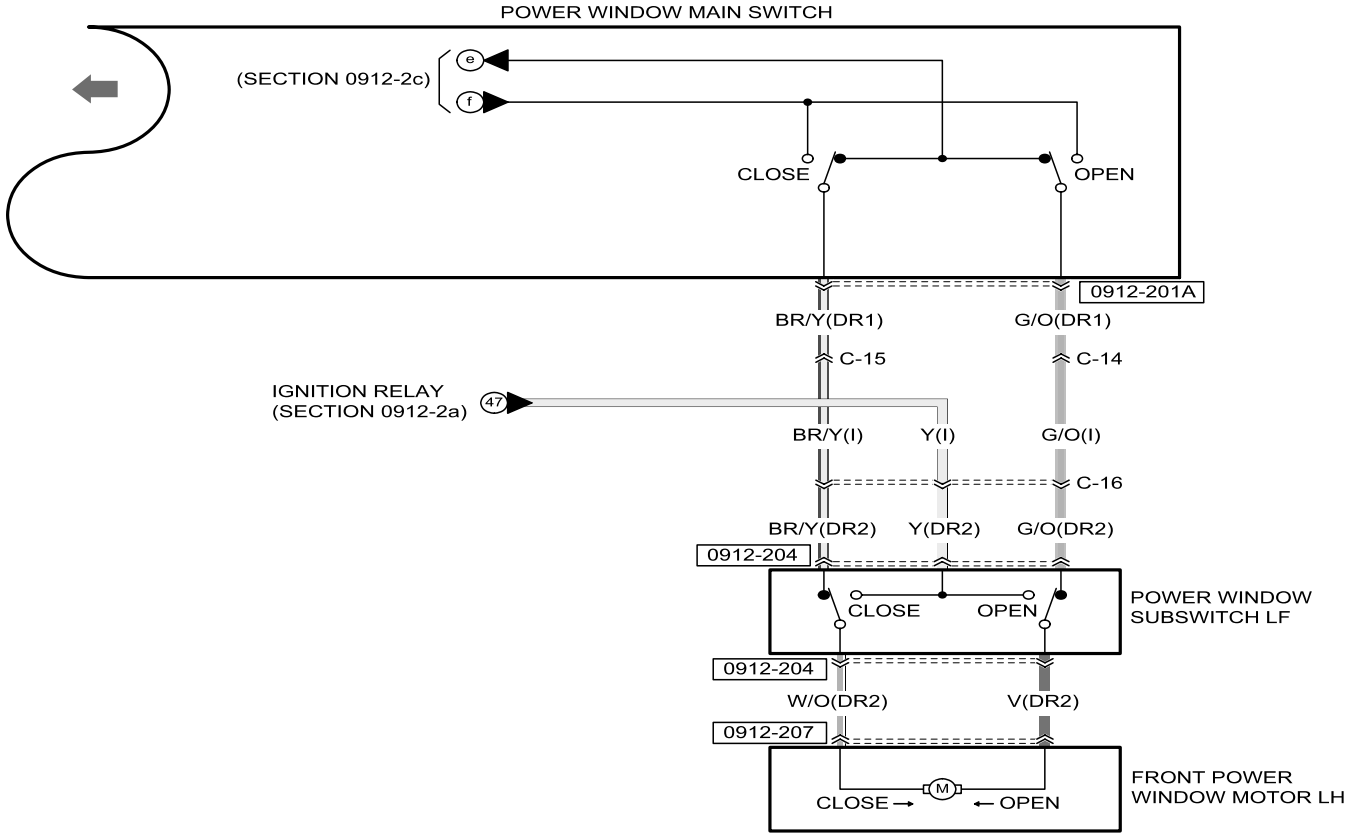

0912-201A
POWER WINDOW MAIN SWITCH

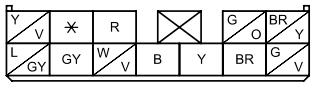

0912-204
POWER WINDOW SUBSWITCH LF

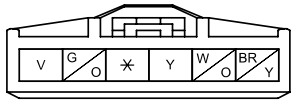

0912-207
FRONT POWER WINDOW
MOTOR LH

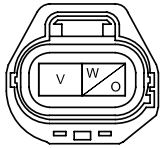

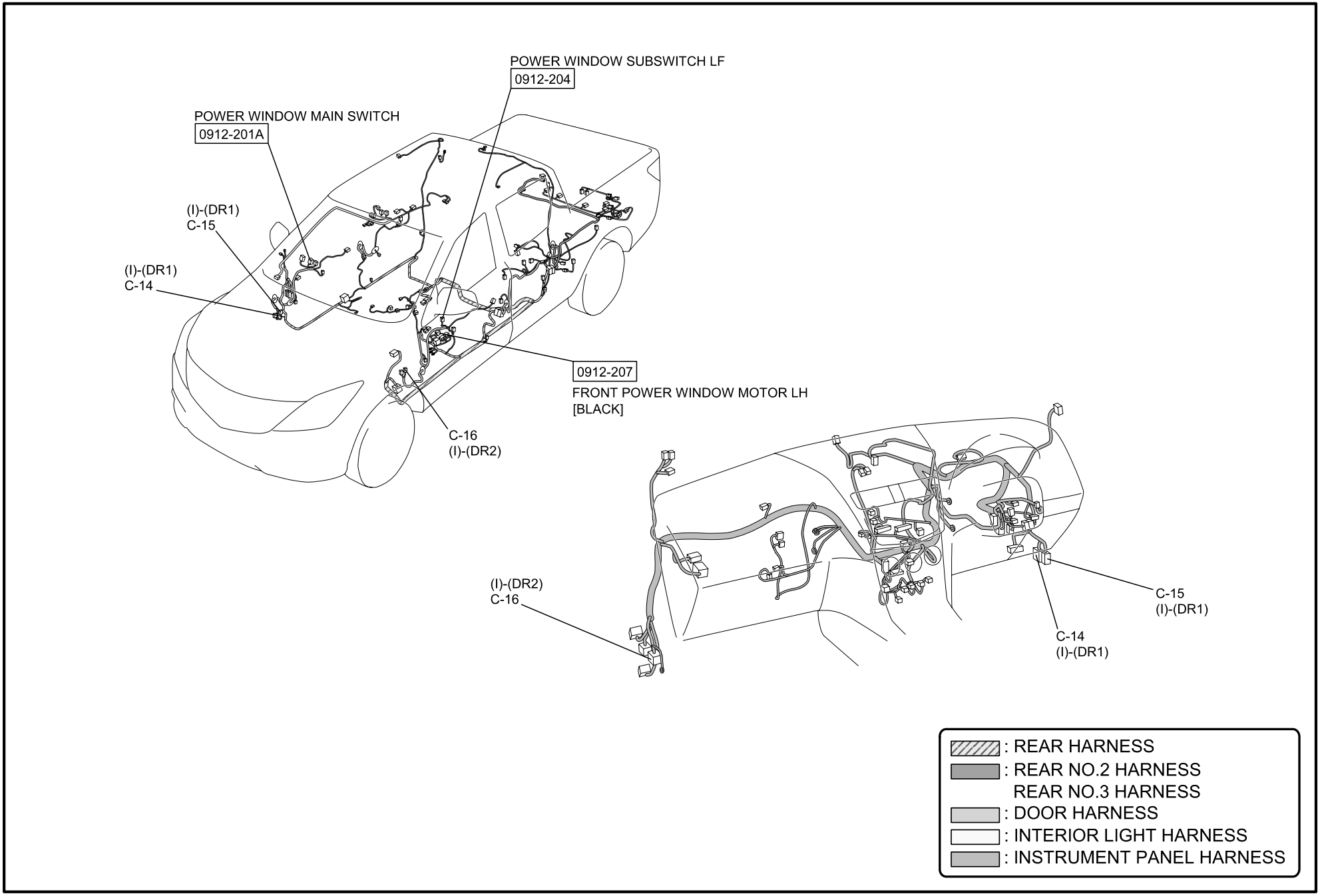
POWER WINDOW SUBSWITCH LF
0912-204
POWER WINDOW MAIN SWITCH
0912-201A
(I)-(DR1)
C-15
(I)-(DR1)
C-14
0912-207
FRONT POWER WINDOW MOTOR LH
[BLACK]
C-16
(I)-(DR2)
(I)-(DR2)
C-16
C-15
(I)-(DR1)
C-14
(I)-(DR1)
: REAR HARNESS
: REAR NO.2 HARNESS
REAR NO.3 HARNESS
: DOOR HARNESS
: INTERIOR LIGHT HARNESS
: INSTRUMENT PANEL HARNESS

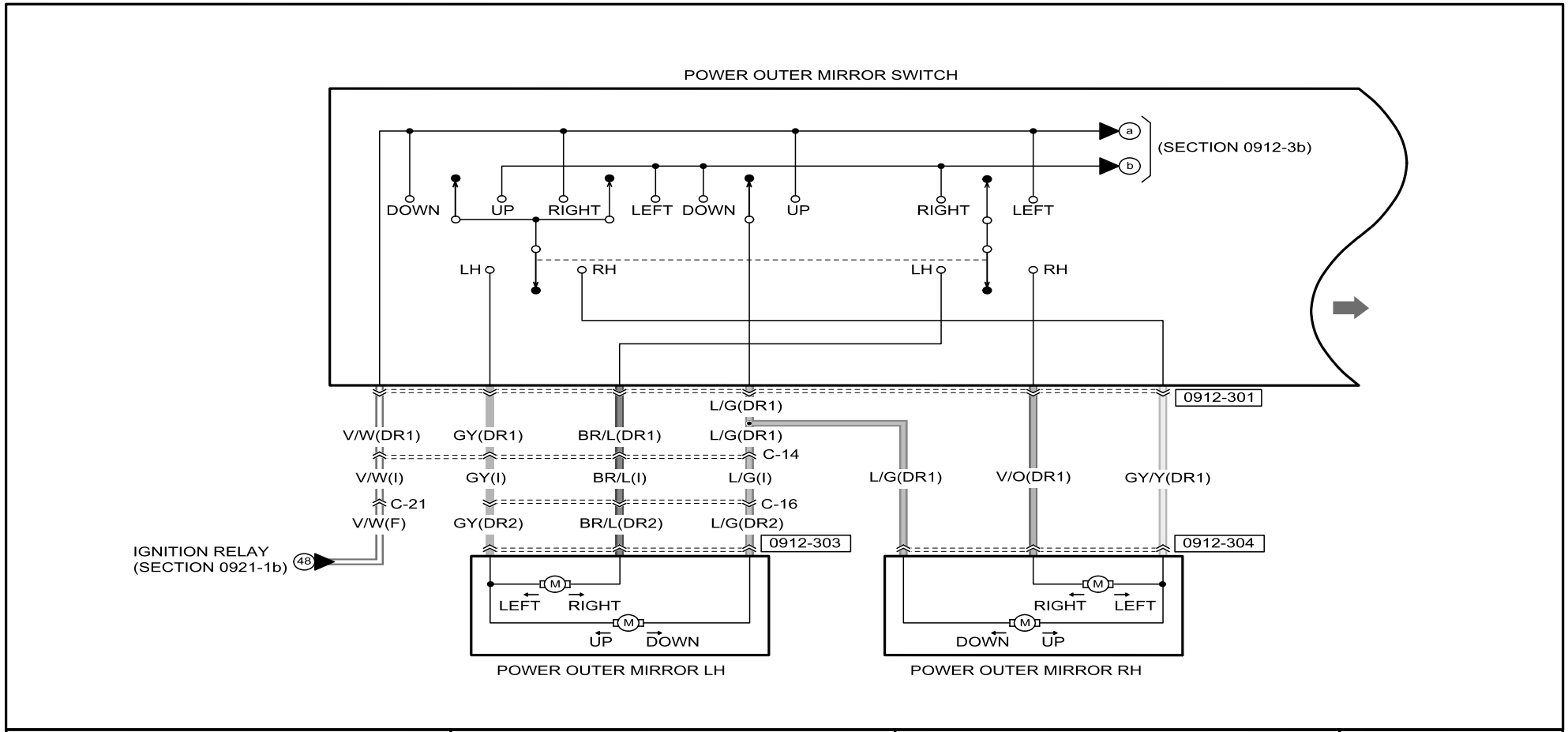

0912-301
POWER OUTER MIRROR SWITCH

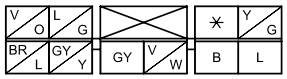

0912-303
POWER OUTER MIRROR LH /
RETRACTABLE OUTER MIRROR LH /
SIDE TURN LIGHT (OUTER MIRROR TYPE) LH /
HEATED OUTER MIRROR LH

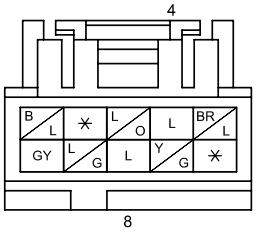

0912-304
POWER OUTER MIRROR RH /
RETRACTABLE OUTER MIRROR RH /
SIDE TURN LIGHT (OUTER MIRROR TYPE) RH /
HEATED OUTER MIRROR RH

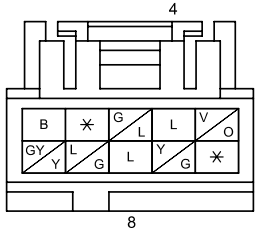

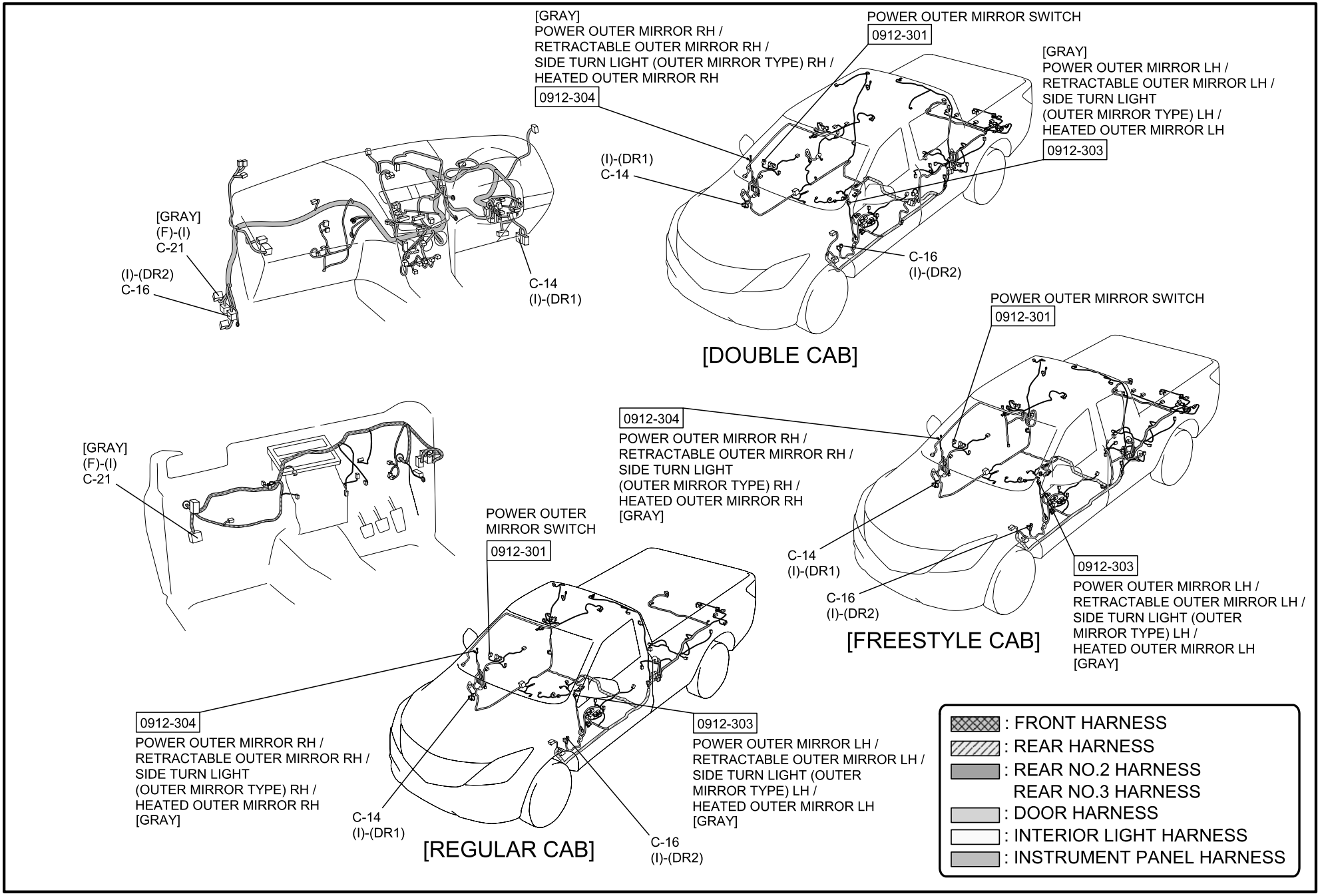
[GRAY]
POWER OUTER MIRROR RH /
RETRACTABLE OUTER MIRROR RH /
SIDE TURN LIGHT (OUTER MIRROR TYPE) RH /
HEATED OUTER MIRROR RH
0912-304
POWER OUTER MIRROR SWITCH
0912-301
[GRAY]
POWER OUTER MIRROR LH /
RETRACTABLE OUTER MIRROR LH /
SIDE TURN LIGHT
(OUTER MIRROR TYPE) LH /
HEATED OUTER MIRROR LH
0912-303
(I)-(DR1)
C-14
C-16
(I)-(DR2)
[GRAY]
(F)-(I)
C-21
(I)-(DR2)
C-16
C-14
(I)-(DR1)
[DOUBLE CAB]
POWER OUTER MIRROR SWITCH
0912-301
0912-304
POWER OUTER MIRROR RH /
RETRACTABLE OUTER MIRROR RH /
SIDE TURN LIGHT
(OUTER MIRROR TYPE) RH /
HEATED OUTER MIRROR RH
[GRAY]
[GRAY]
(F)-(I)
C-21
C-14
(I)-(DR1)
C-16
(I)-(DR2)
0912-303
POWER OUTER MIRROR LH /
RETRACTABLE OUTER MIRROR LH /
SIDE TURN LIGHT (OUTER
MIRROR TYPE) LH /
HEATED OUTER MIRROR LH
[GRAY]
[FREESTYLE CAB]
POWER OUTER
MIRROR SWITCH
0912-301
0912-304
POWER OUTER MIRROR RH /
RETRACTABLE OUTER MIRROR RH /
SIDE TURN LIGHT
(OUTER MIRROR TYPE) RH /
HEATED OUTER MIRROR RH
[GRAY]
0912-303
POWER OUTER MIRROR LH /
RETRACTABLE OUTER MIRROR LH /
SIDE TURN LIGHT (OUTER
MIRROR TYPE) LH /
HEATED OUTER MIRROR LH
[GRAY]
C-14
(I)-(DR1)
C-16
(I)-(DR2)
[REGULAR CAB]
: FRONT HARNESS
: REAR HARNESS
: REAR NO.2 HARNESS
REAR NO.3 HARNESS
: DOOR HARNESS
: INTERIOR LIGHT HARNESS
: INSTRUMENT PANEL HARNESS

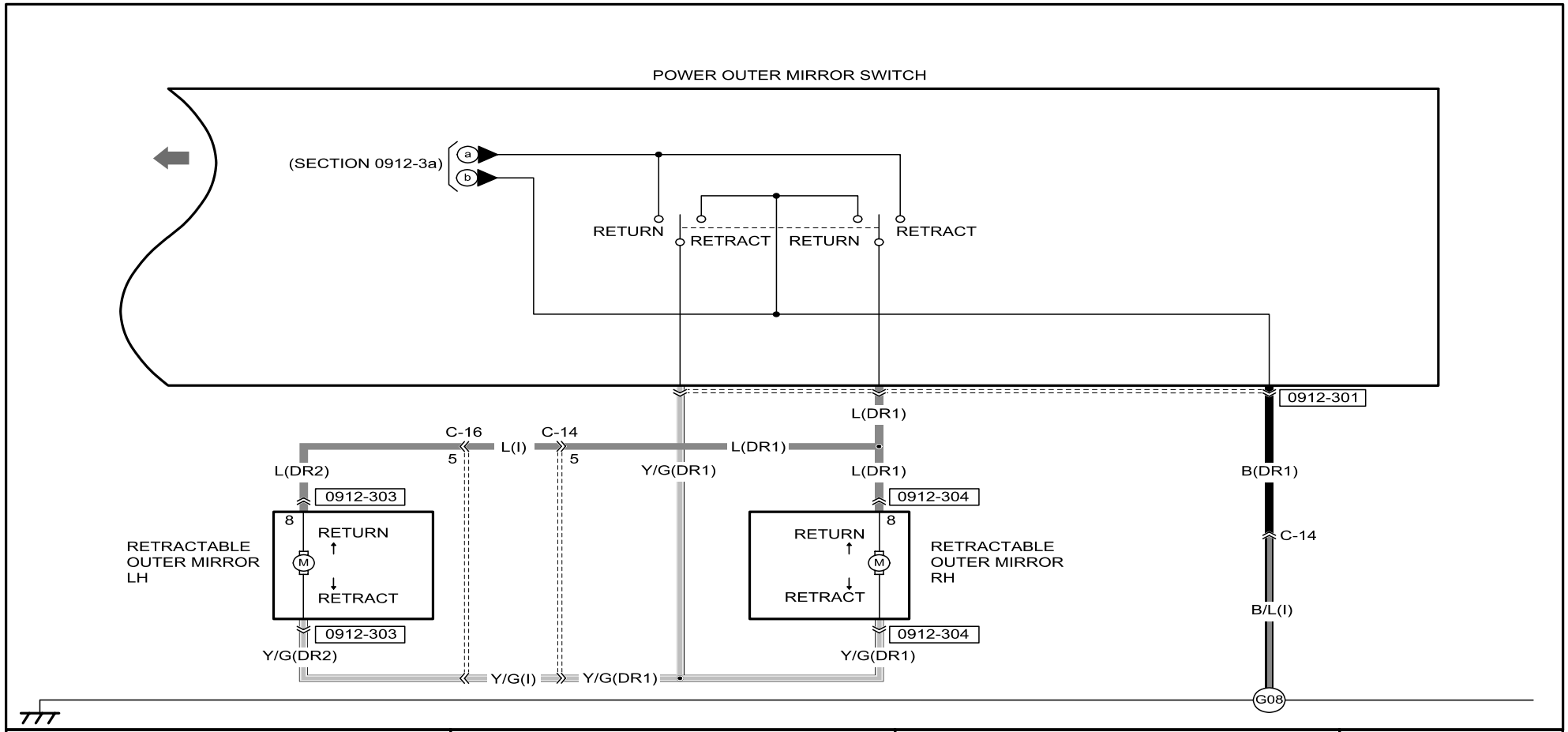

0912-301
POWER OUTER MIRROR SWITCH

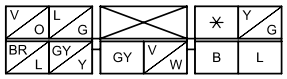

0912-303
POWER OUTER MIRROR LH /
RETRACTABLE OUTER MIRROR LH /
SIDE TURN LIGHT (OUTER MIRROR TYPE) LH /
HEATED OUTER MIRROR LH

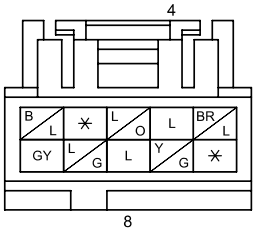

0912-304
POWER OUTER MIRROR RH /
RETRACTABLE OUTER MIRROR RH /
SIDE TURN LIGHT (OUTER MIRROR TYPE) RH /
HEATED OUTER MIRROR RH

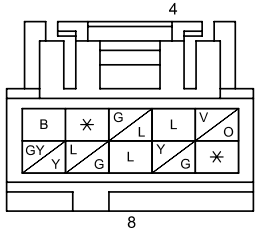

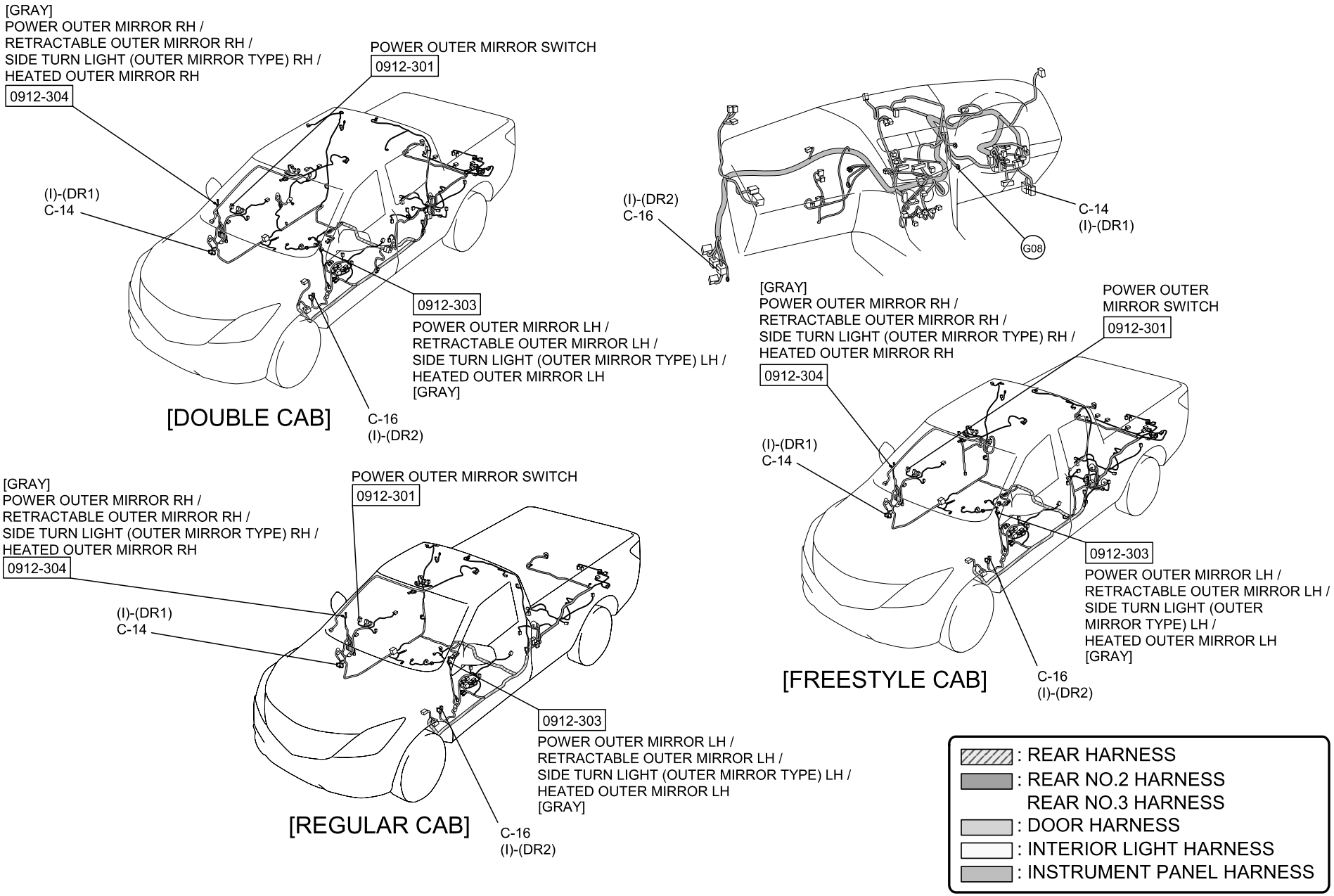
[GRAY]
POWER OUTER MIRROR RH /
RETRACTABLE OUTER MIRROR RH /
SIDE TURN LIGHT (OUTER MIRROR TYPE) RH /
HEATED OUTER MIRROR RH
0912-304
POWER OUTER MIRROR SWITCH
0912-301
(I)-(DR1)
C-14
0912-303
POWER OUTER MIRROR LH /
RETRACTABLE OUTER MIRROR LH /
SIDE TURN LIGHT (OUTER MIRROR TYPE) LH /
HEATED OUTER MIRROR LH
[GRAY]
C-16
(I)-(DR2)
[DOUBLE CAB]
(I)-(DR2)
C-16
C-14
(I)-(DR1)
G08
[GRAY]
POWER OUTER MIRROR RH /
RETRACTABLE OUTER MIRROR RH /
SIDE TURN LIGHT (OUTER MIRROR TYPE) RH /
HEATED OUTER MIRROR RH
0912-304
POWER OUTER
MIRROR SWITCH
0912-301
(I)-(DR1)
C-14
0912-303
POWER OUTER MIRROR LH /
RETRACTABLE OUTER MIRROR LH /
SIDE TURN LIGHT (OUTER
MIRROR TYPE) LH /
HEATED OUTER MIRROR LH
[GRAY]
[FREESTYLE CAB]
C-16
(I)-(DR2)
[GRAY]
POWER OUTER MIRROR RH /
RETRACTABLE OUTER MIRROR RH /
SIDE TURN LIGHT (OUTER MIRROR TYPE) RH /
HEATED OUTER MIRROR RH
0912-304
POWER OUTER MIRROR SWITCH
0912-301
(I)-(DR1)
C-14
0912-303
POWER OUTER MIRROR LH /
RETRACTABLE OUTER MIRROR LH /
SIDE TURN LIGHT (OUTER MIRROR TYPE) LH /
HEATED OUTER MIRROR LH
[GRAY]
[REGULAR CAB]
C-16
(I)-(DR2)
: REAR HARNESS
: REAR NO.2 HARNESS
REAR NO.3 HARNESS
: DOOR HARNESS
: INTERIOR LIGHT HARNESS
: INSTRUMENT PANEL HARNESS

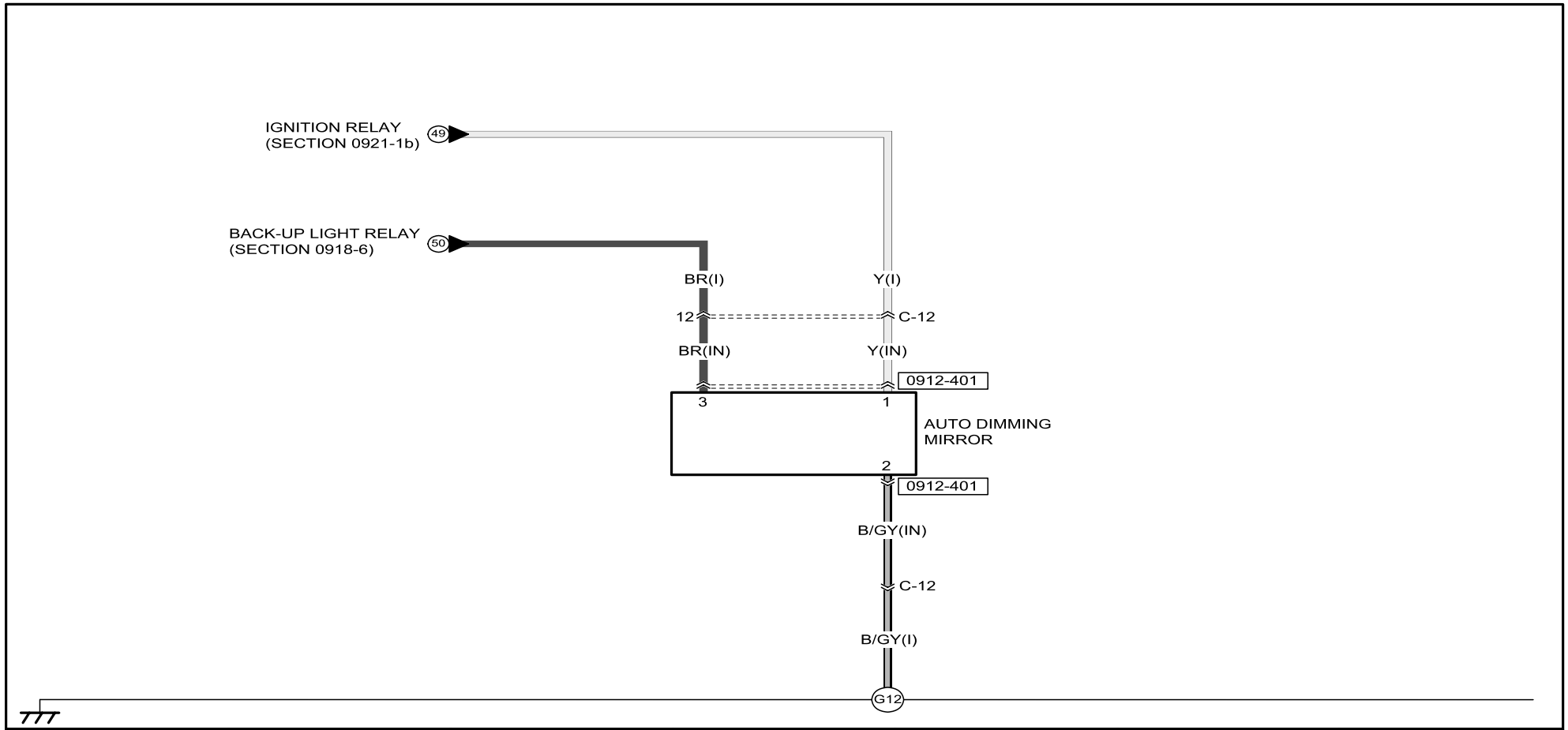

0912-401
AUTO DIMMING MIRROR

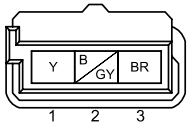

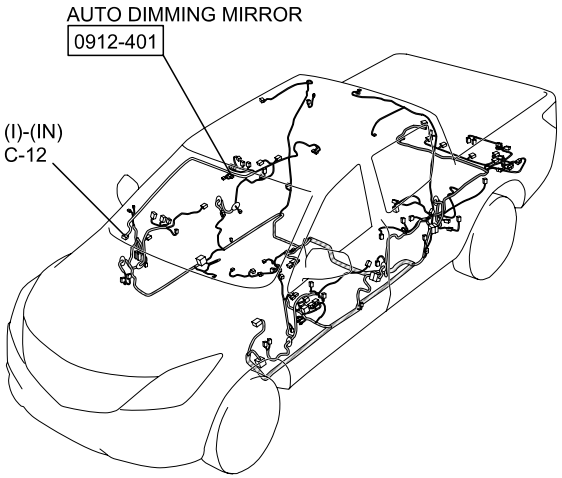

[DOUBLE CAB]

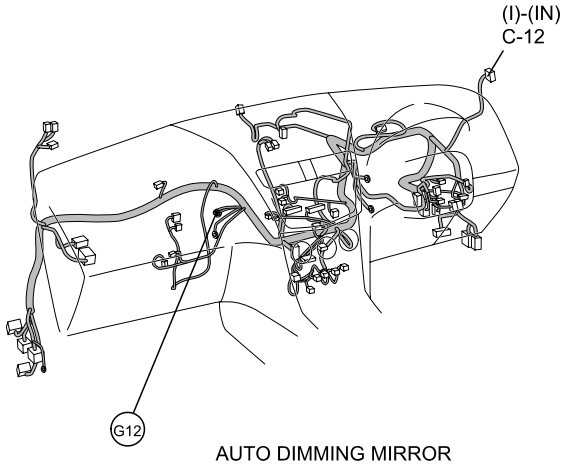

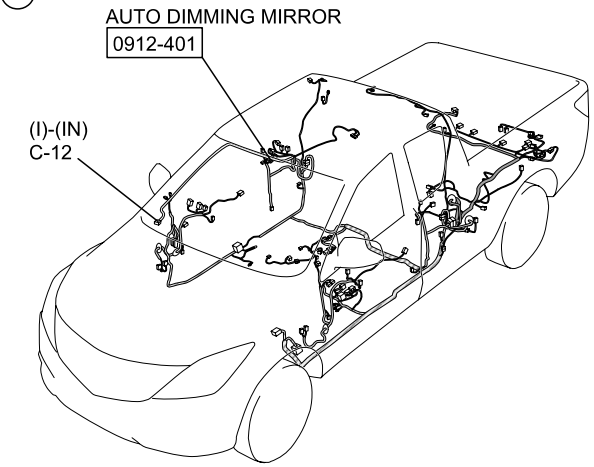

[FREESTYLE CAB]

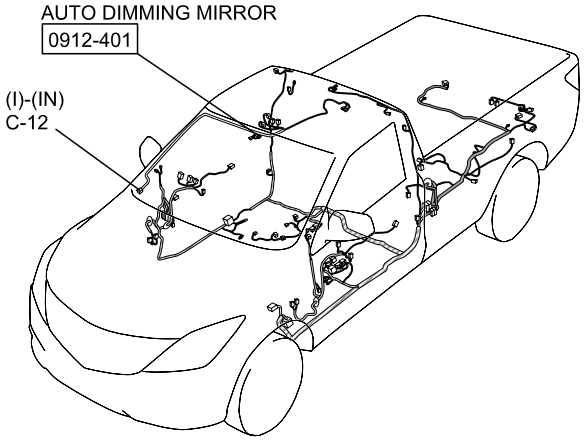

[REGULAR CAB]

: REAR HARNESS
: REAR NO.2 HARNESS
REAR NO.3 HARNESS
: DOOR HARNESS
: INTERIOR LIGHT HARNESS
: INSTRUMENT PANEL HARNESS

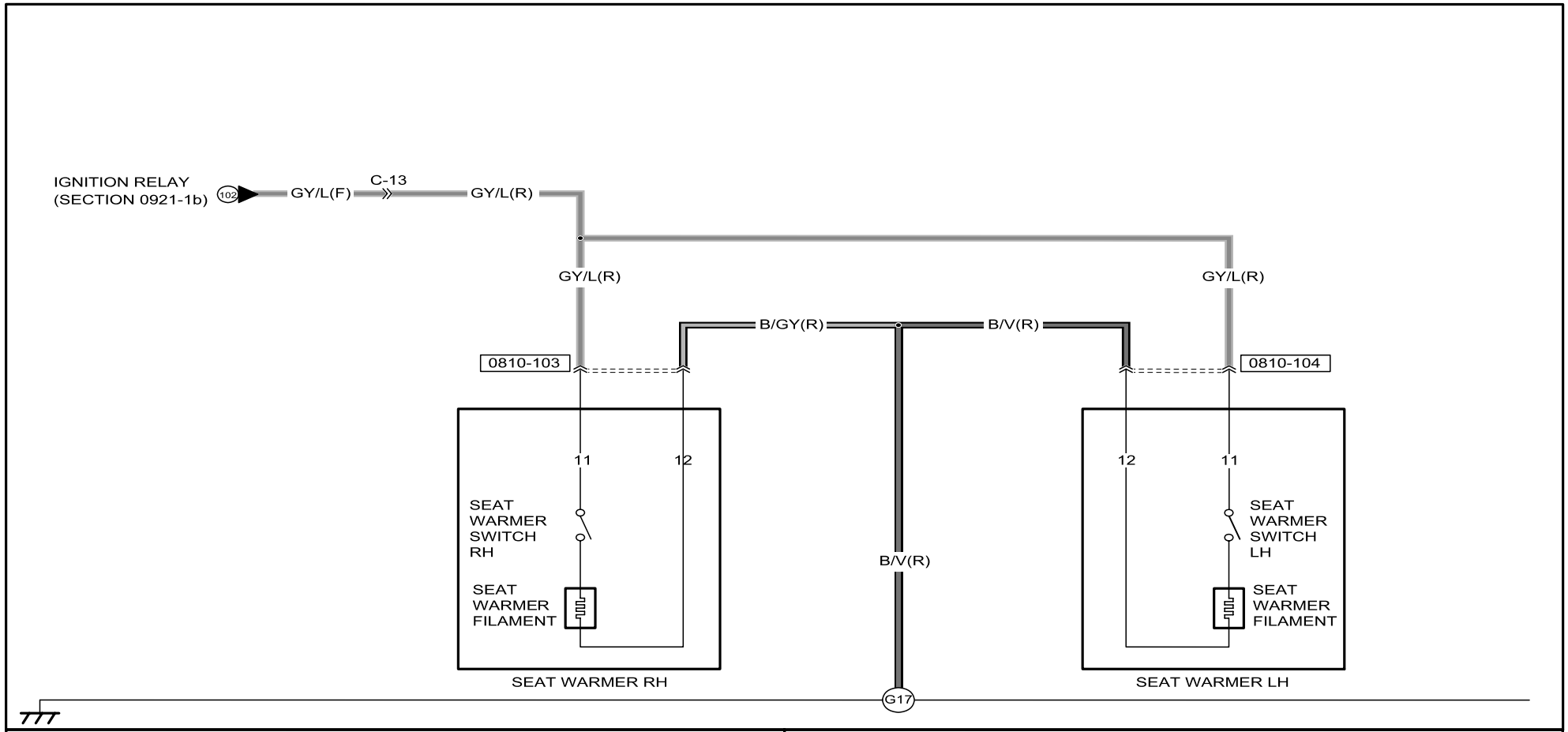

0810-103
REAR HARNESS-SHORT CORD

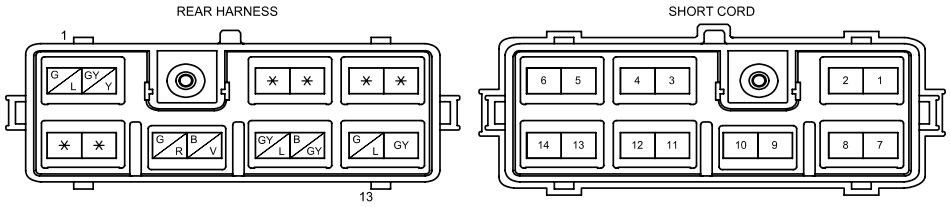

WIRE COLORS ARE INDICATED BY NUMBERS.

0810-104
REAR HARNESS-SHORT CORD

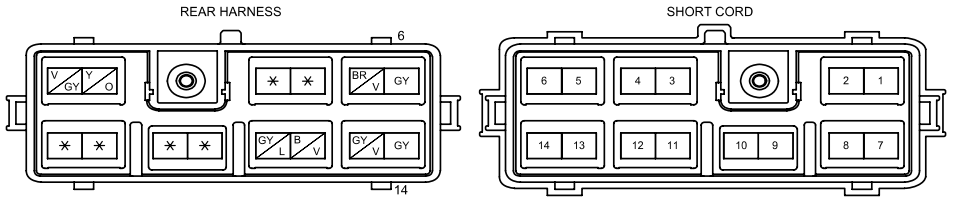

WIRE COLORS ARE INDICATED BY NUMBERS.

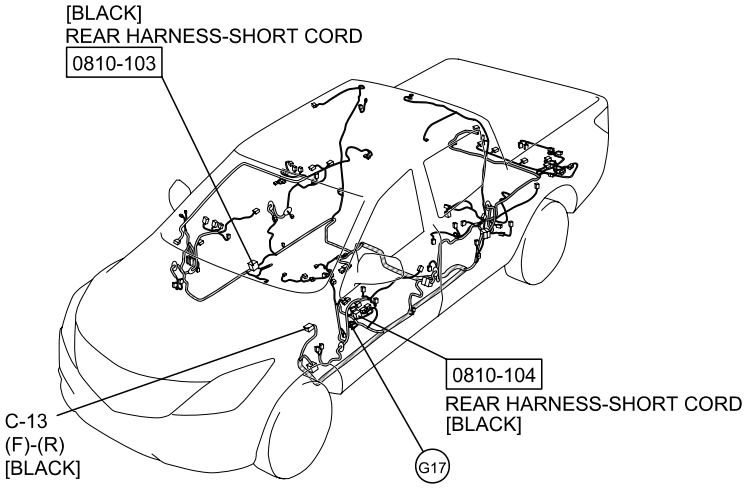

[DOUBLE CAB]

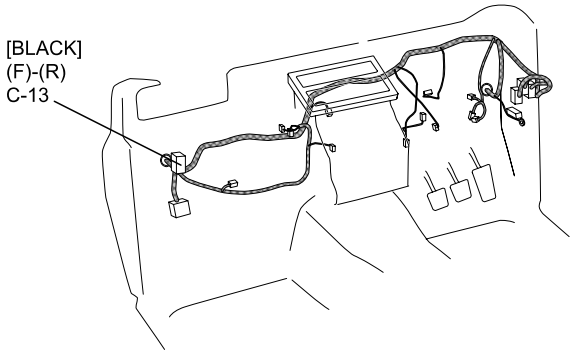

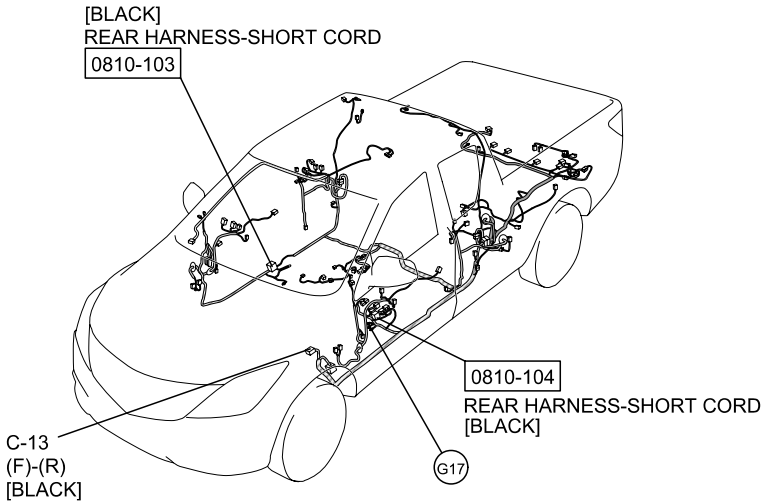

[FREESTYLE CAB]

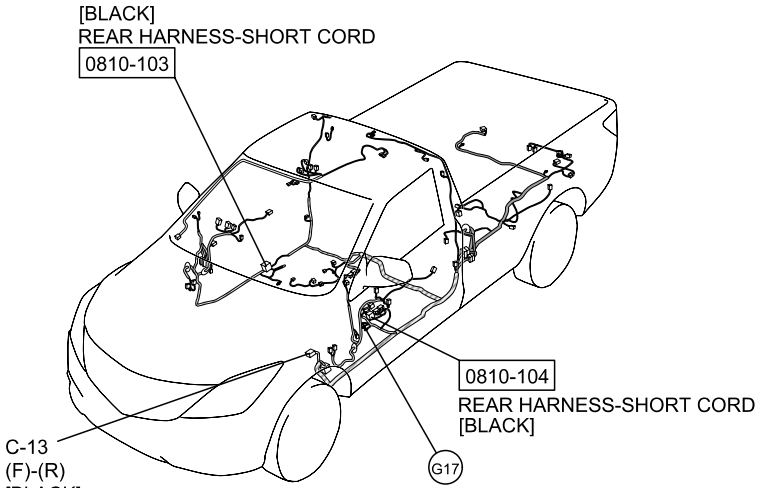

[REGULAR CAB]

: FRONT HARNESS
: REAR HARNESS
: REAR NO.2 HARNESS
REAR NO.3 HARNESS
: DOOR HARNESS
: INTERIOR LIGHT HARNESS

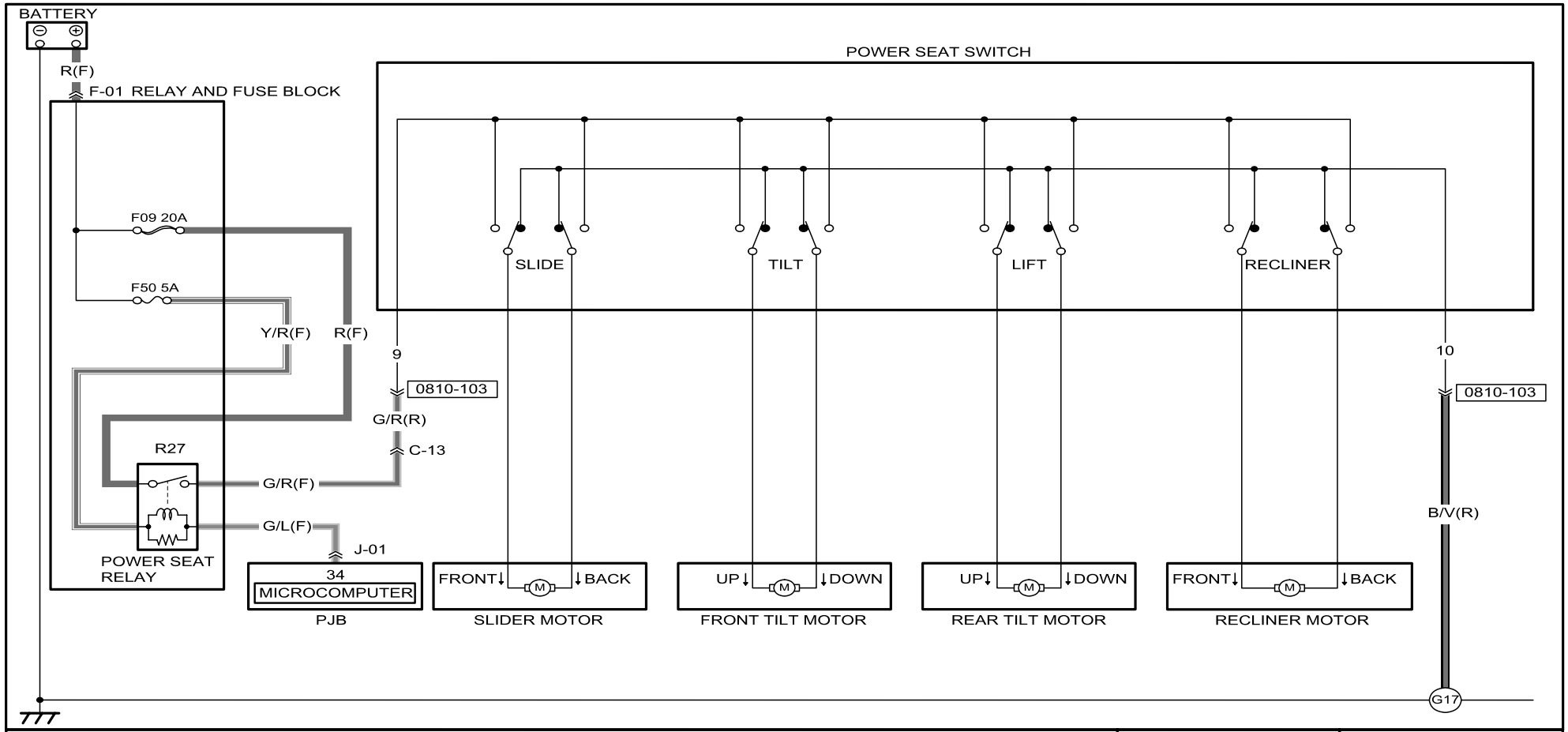

0810-103
REAR HARNESS-SHORT CORD

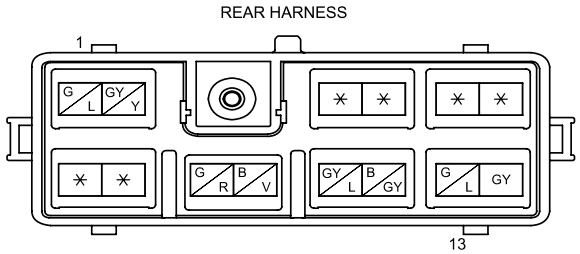

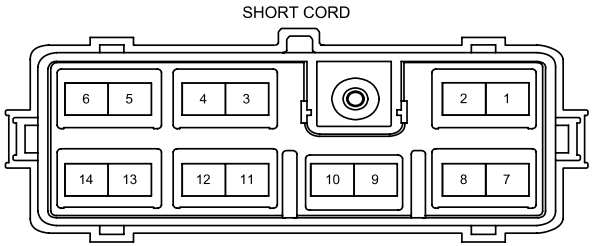

WIRE COLORS ARE INDICATED BY NUMBERS.

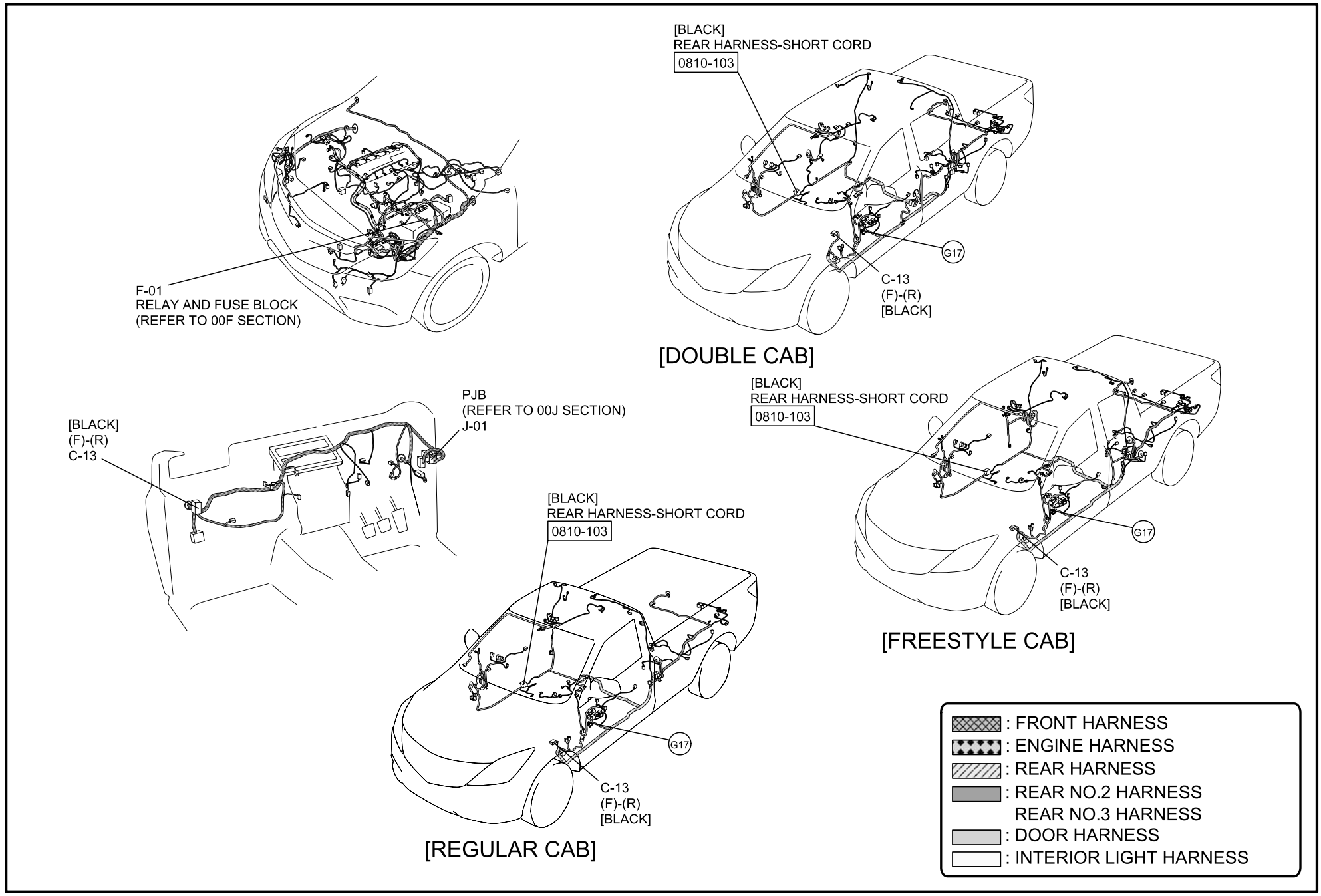
F-01
RELAY AND FUSE BLOCK
(REFER TO 00F SECTION)
[BLACK]
REAR HARNESS-SHORT CORD
0810-103
G17
C-13
(F)-(R)
[BLACK]
[DOUBLE CAB]
[BLACK]
(F)-(R)
C-13
PJB
(REFER TO 00J SECTION)
J-01
[BLACK]
REAR HARNESS-SHORT CORD
0810-103
G17
C-13
(F)-(R)
[BLACK]
[FREESTYLE CAB]
[BLACK]
REAR HARNESS-SHORT CORD
0810-103
G17
C-13
(F)-(R)
[BLACK]
[REGULAR CAB]
: FRONT HARNESS
: ENGINE HARNESS
: REAR HARNESS
: REAR NO.2 HARNESS
REAR NO.3 HARNESS
: DOOR HARNESS
: INTERIOR LIGHT HARNESS

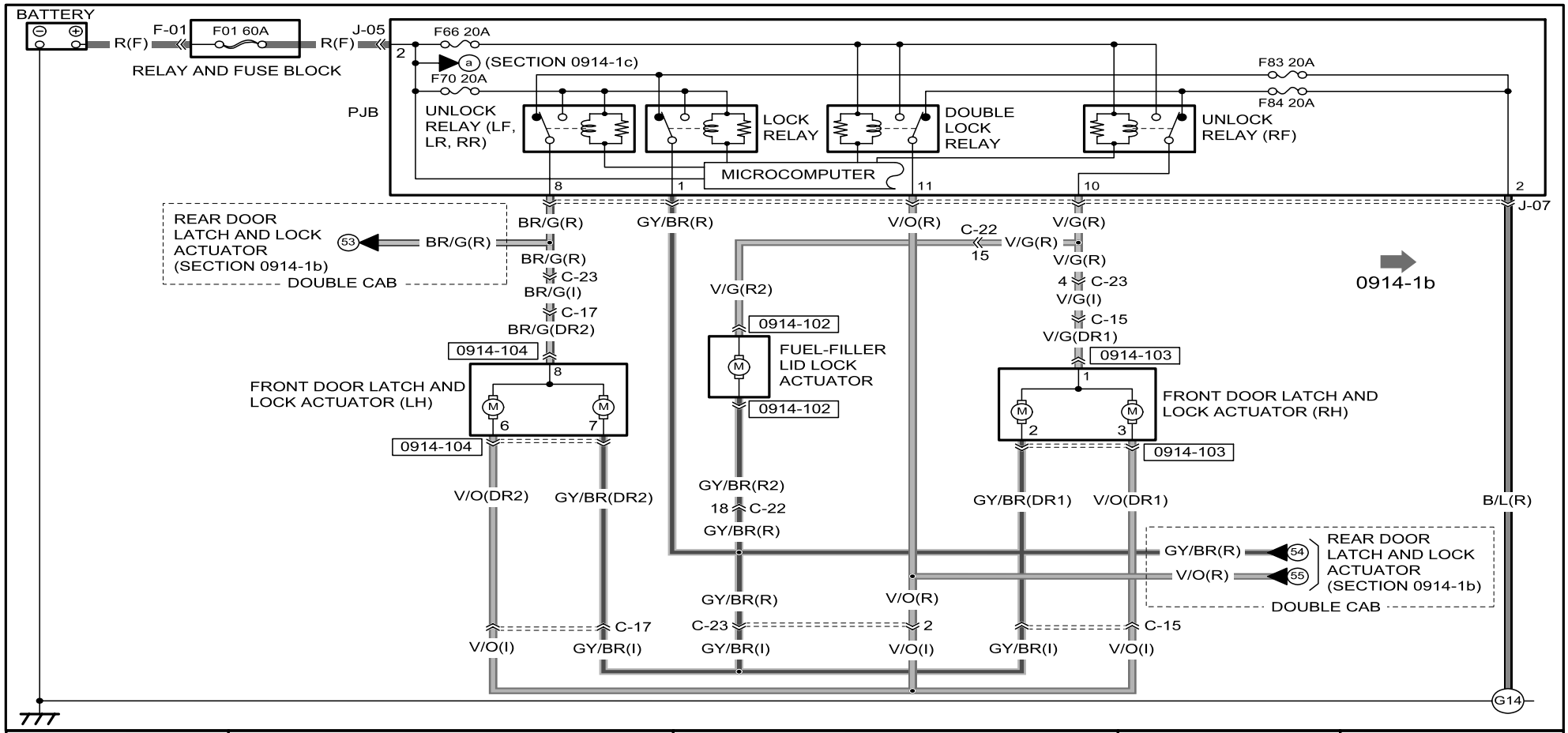

0914-102
FUEL-FILLER LID LOCK ACTUATOR

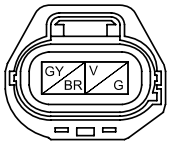

0914-103
FRONT DOOR LATCH AND LOCK ACTUATOR (RH)

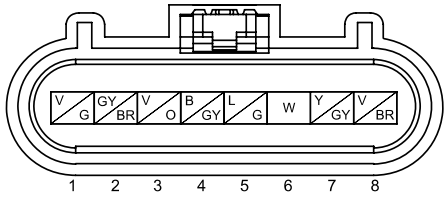

0914-104
FRONT DOOR LATCH AND LOCK ACTUATOR (LH)

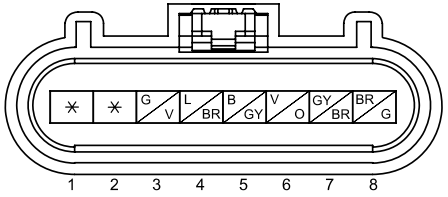

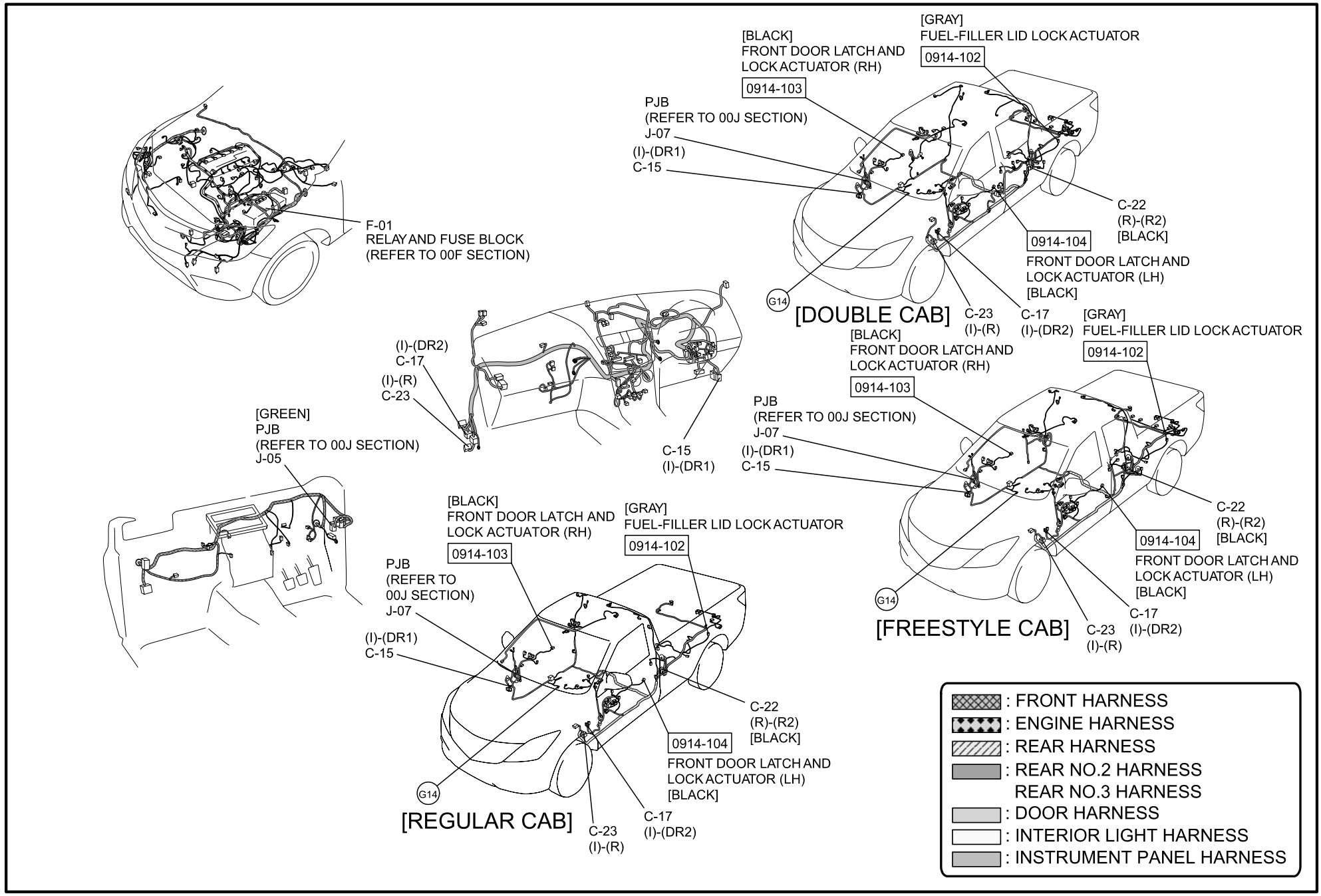
F-01
RELAY AND FUSE BLOCK
(REFER TO 00F SECTION)
[BLACK]
FRONT DOOR LATCH AND
LOCK ACTUATOR (RH)
0914-103
[GRAY]
FUEL-FILLER LID LOCK ACTUATOR
0914-102
PJB
(REFER TO 00J SECTION)
J-07
(I)-(DR1)
C-15
C-22
(R)-(R2)
[BLACK]
0914-104
FRONT DOOR LATCH AND
LOCK ACTUATOR (LH)
[BLACK]
G14
[DOUBLE CAB]
C-23
(I)-(R)
C-17
(I)-(DR2)
(I)-(DR2)
C-17
(I)-(R)
C-23
C-15
(I)-(DR1)
[GREEN]
PJB
(REFER TO 00J SECTION)
J-05
[BLACK]
FRONT DOOR LATCH AND
LOCK ACTUATOR (RH)
0914-103
[GRAY]
FUEL-FILLER LID LOCK ACTUATOR
0914-102
PJB
(REFER TO 00J SECTION)
J-07
(I)-(DR1)
C-15
C-22
(R)-(R2)
[BLACK]
0914-104
FRONT DOOR LATCH AND
LOCK ACTUATOR (LH)
[BLACK]
G14
[FREESTYLE CAB]
C-23
(I)-(R)
C-17
(I)-(DR2)
[BLACK]
FRONT DOOR LATCH AND
LOCK ACTUATOR (RH)
0914-103
[GRAY]
FUEL-FILLER LID LOCK ACTUATOR
0914-102
PJB
(REFER TO
00J SECTION)
J-07
(I)-(DR1)
C-15
C-22
(R)-(R2)
[BLACK]
0914-104
FRONT DOOR LATCH AND
LOCK ACTUATOR (LH)
[BLACK]
G14
[REGULAR CAB]
C-23
(I)-(R)
C-17
(I)-(DR2)
: FRONT HARNESS
: ENGINE HARNESS
: REAR HARNESS
: REAR NO.2 HARNESS
REAR NO.3 HARNESS
: DOOR HARNESS
: INTERIOR LIGHT HARNESS
: INSTRUMENT PANEL HARNESS

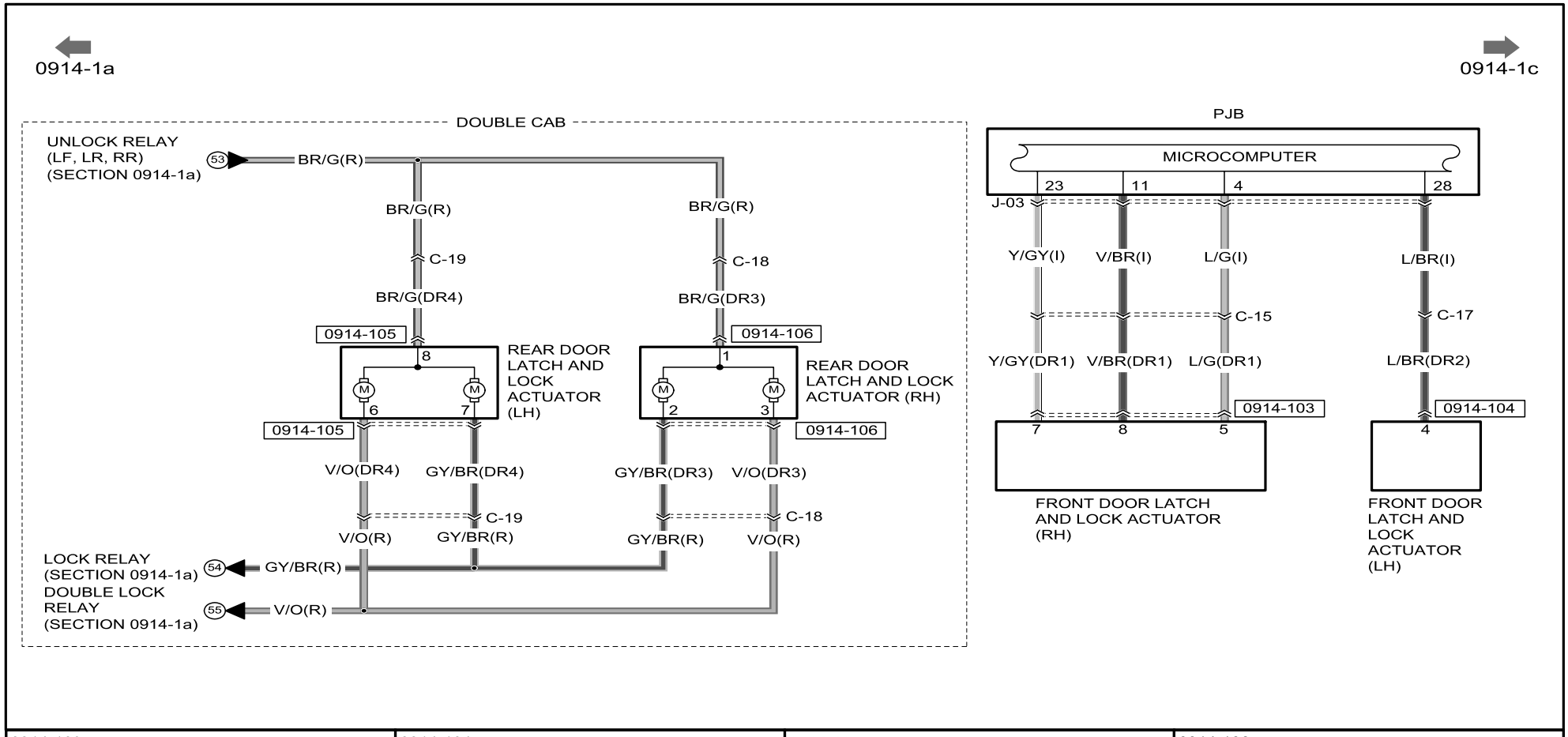

0914-103
FRONT DOOR LATCH AND LOCK ACTUATOR (RH)

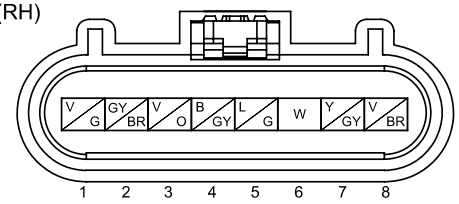

0914-104
FRONT DOOR LATCH AND LOCK ACTUATOR (LH)

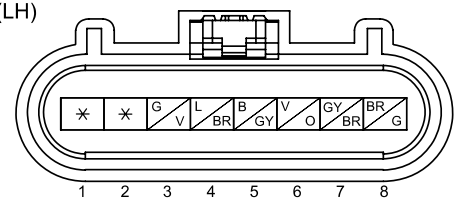

0914-105
REAR DOOR LATCH AND LOCK ACTUATOR (LH)

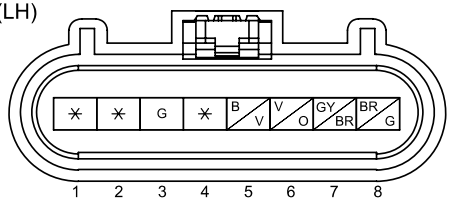

0914-106
REAR DOOR LATCH AND LOCK ACTUATOR (RH)

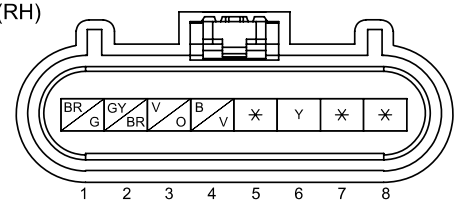

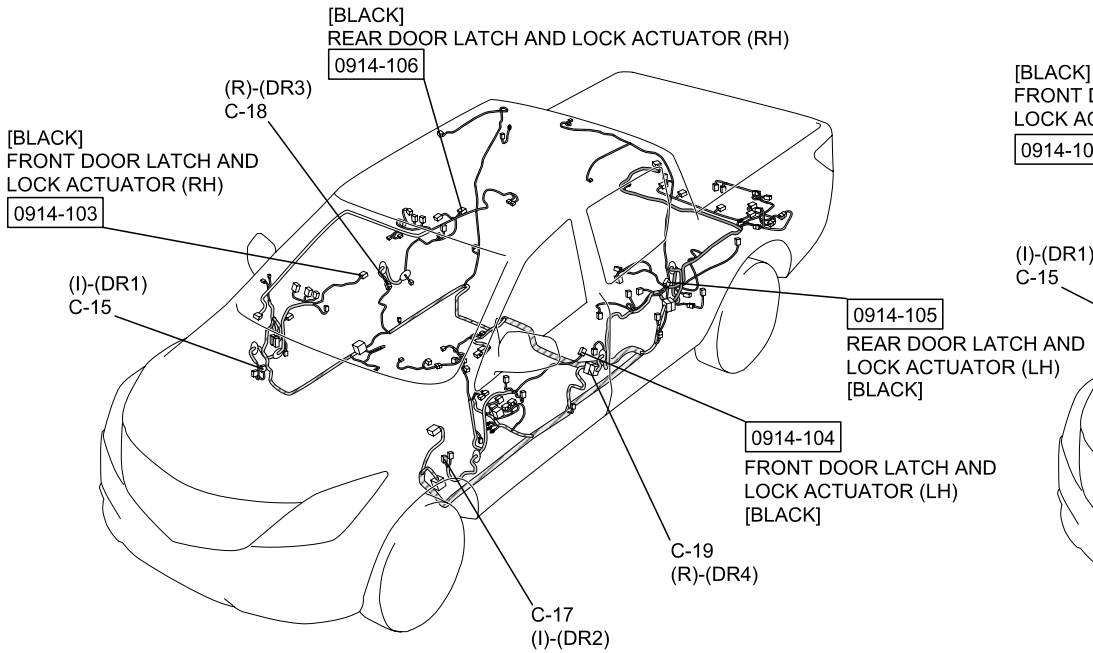

[DOUBLE CAB]

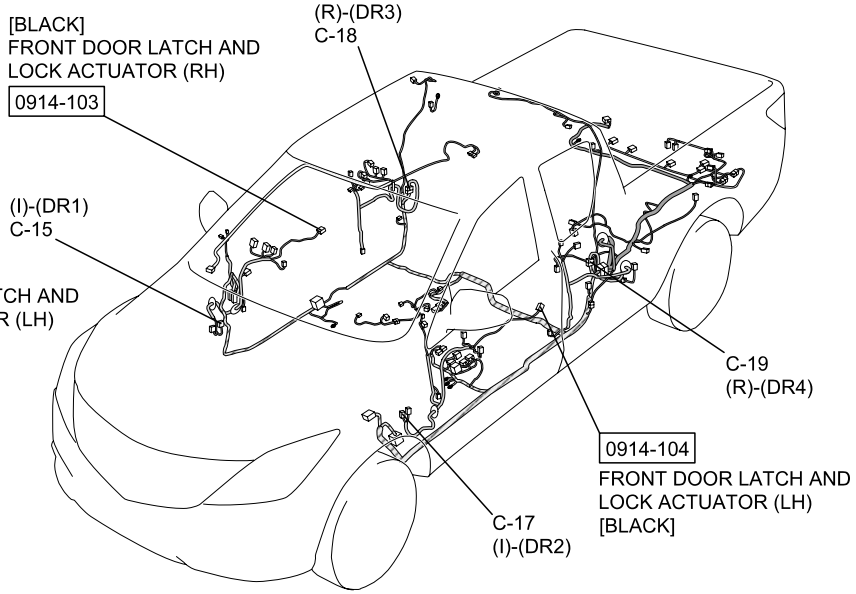

[FREESTYLE CAB]

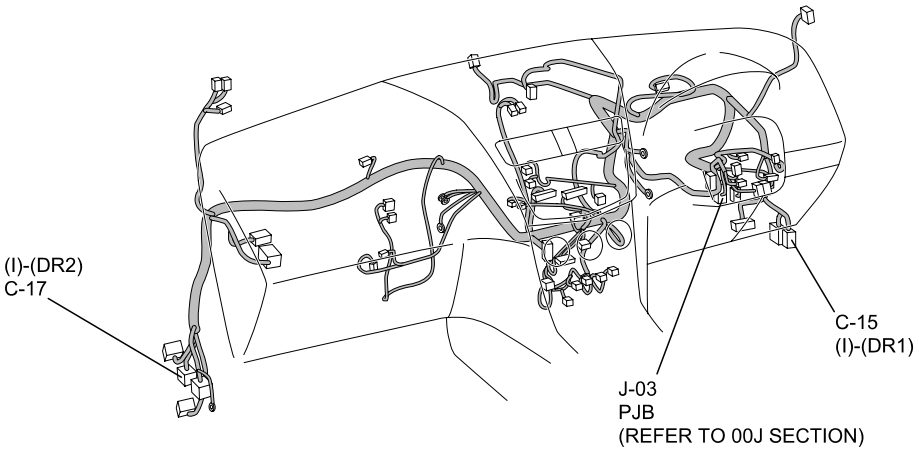

: REAR HARNESS
: REAR NO.2 HARNESS
REAR NO.3 HARNESS
: DOOR HARNESS
: INTERIOR LIGHT HARNESS
: INSTRUMENT PANEL HARNESS

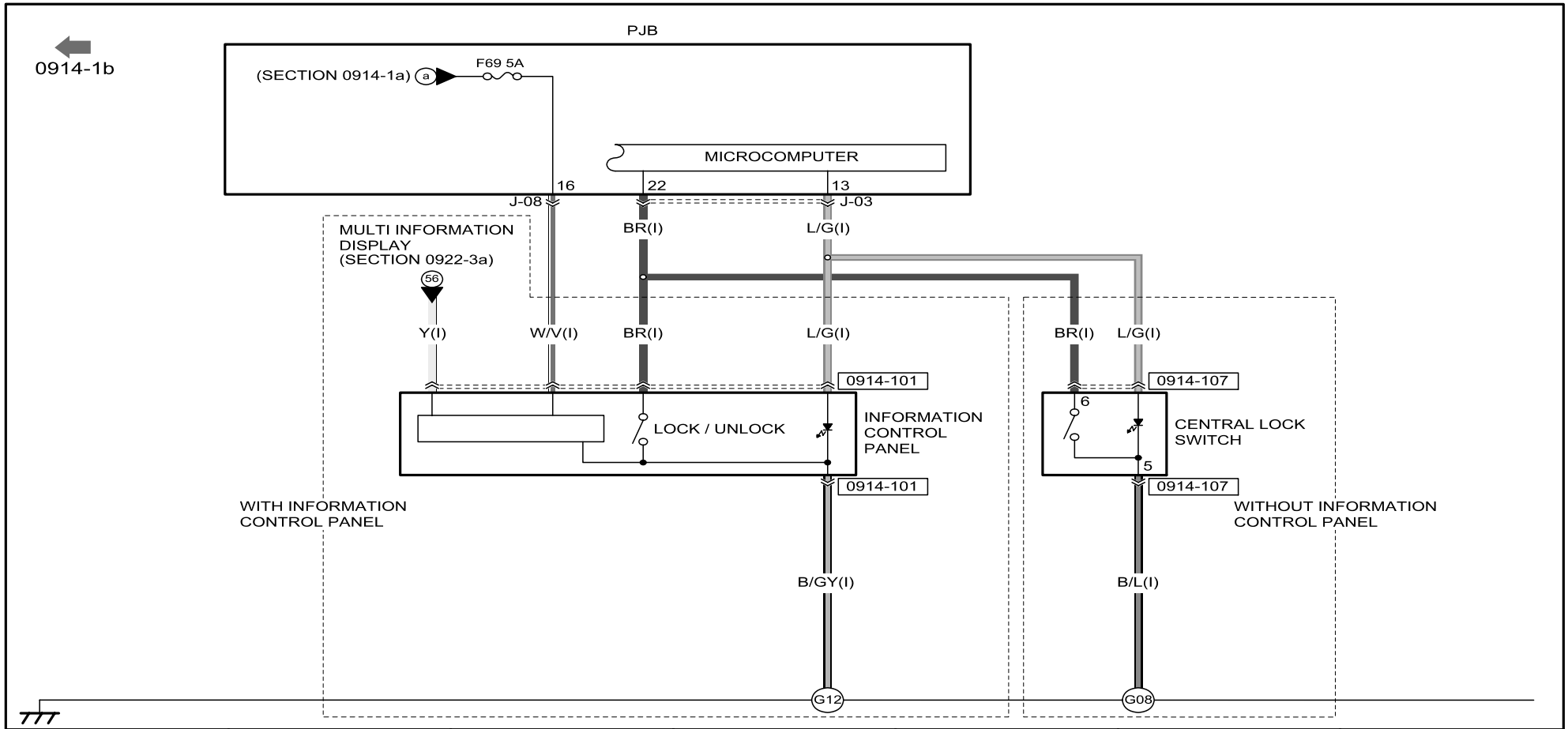

0914-101
INFORMATION
CONTROL PANEL

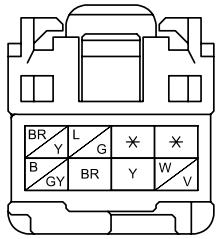

0914-107
CENTRAL LOCK SWITCH

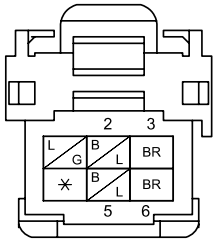

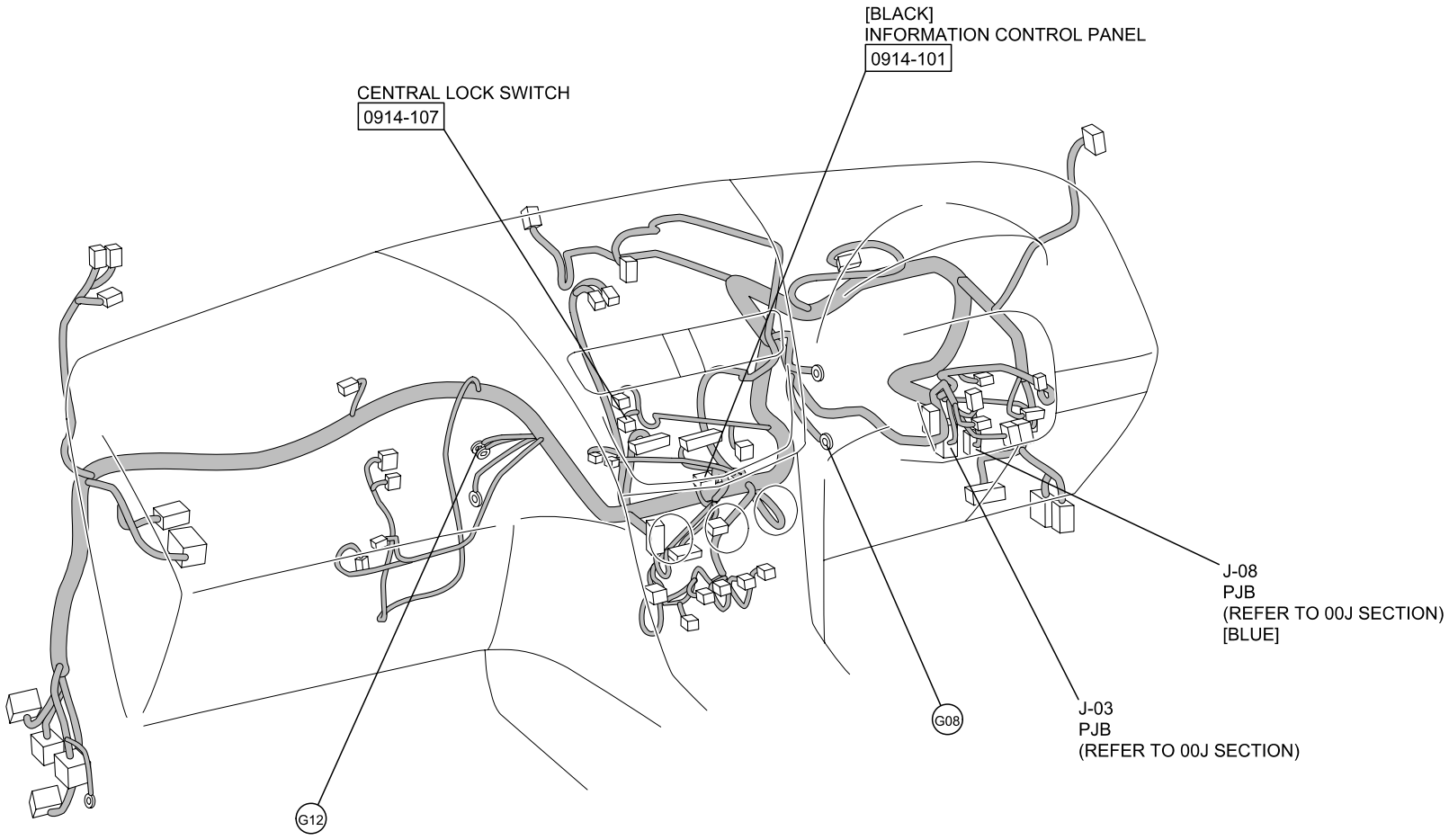

: INSTRUMENT PANEL HARNESS

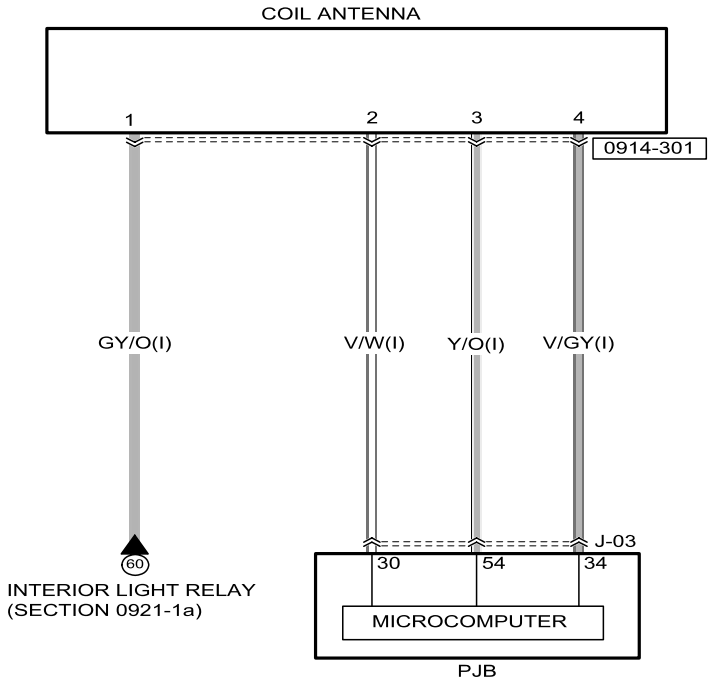

0914-301
COIL ANTENNA

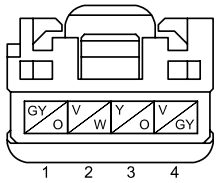

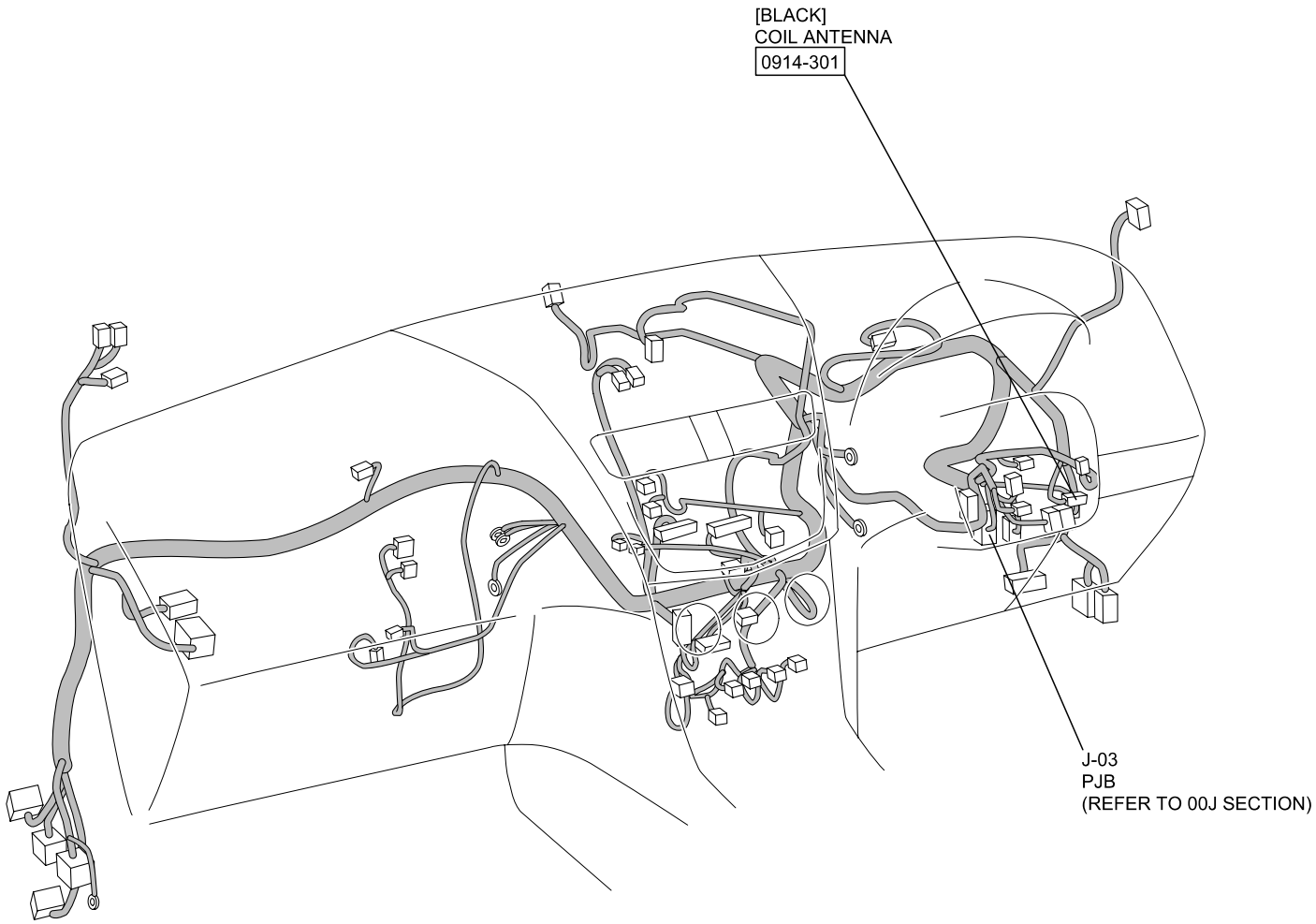

: INSTRUMENT PANEL HARNESS

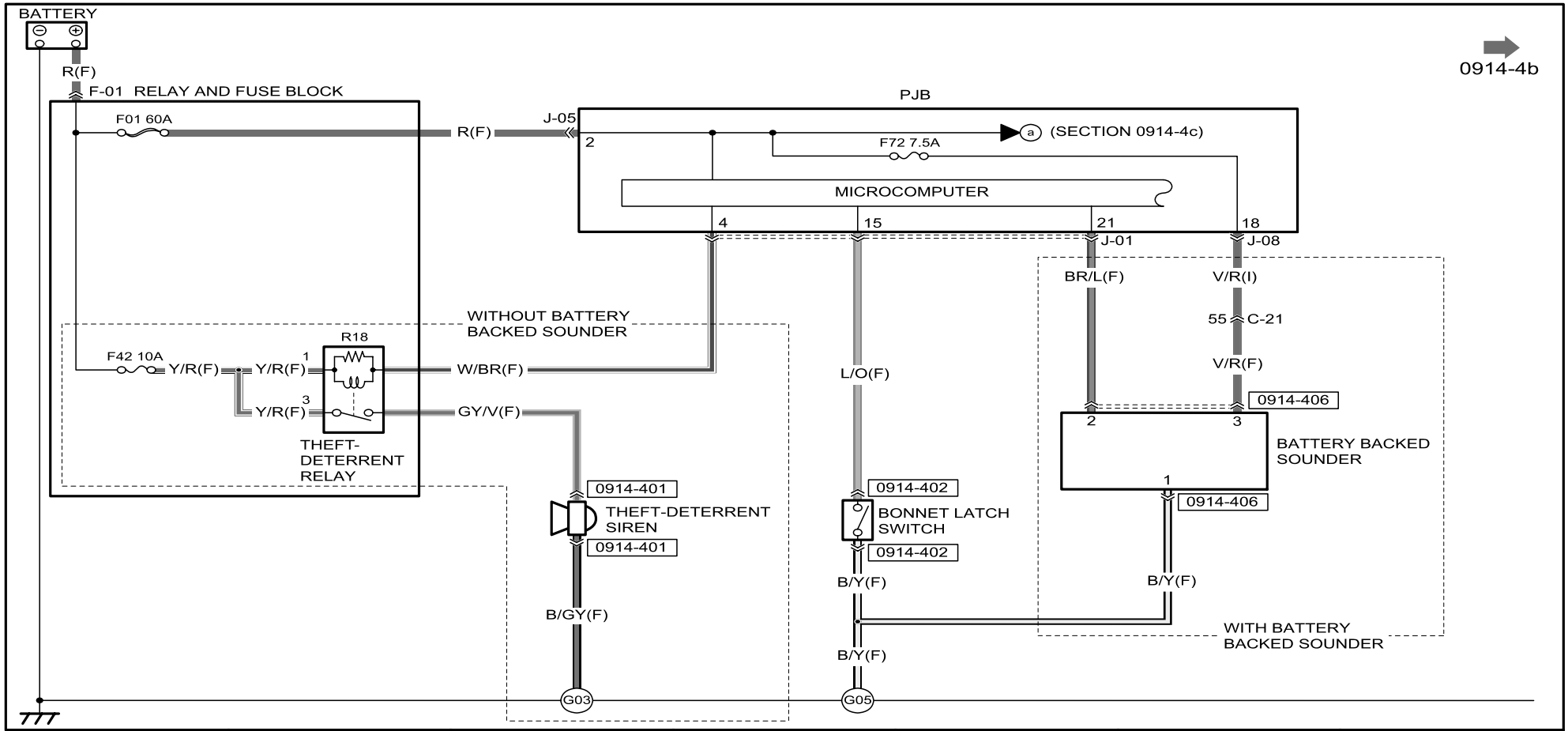

0914-401 THEFT-DETERRENT SIREN	0914-402 BONNET LATCH SWITCH	0914-406 BATTERY BACKED SOUNDER				
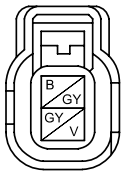	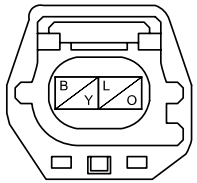	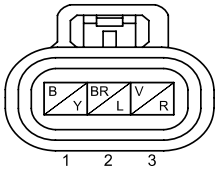				

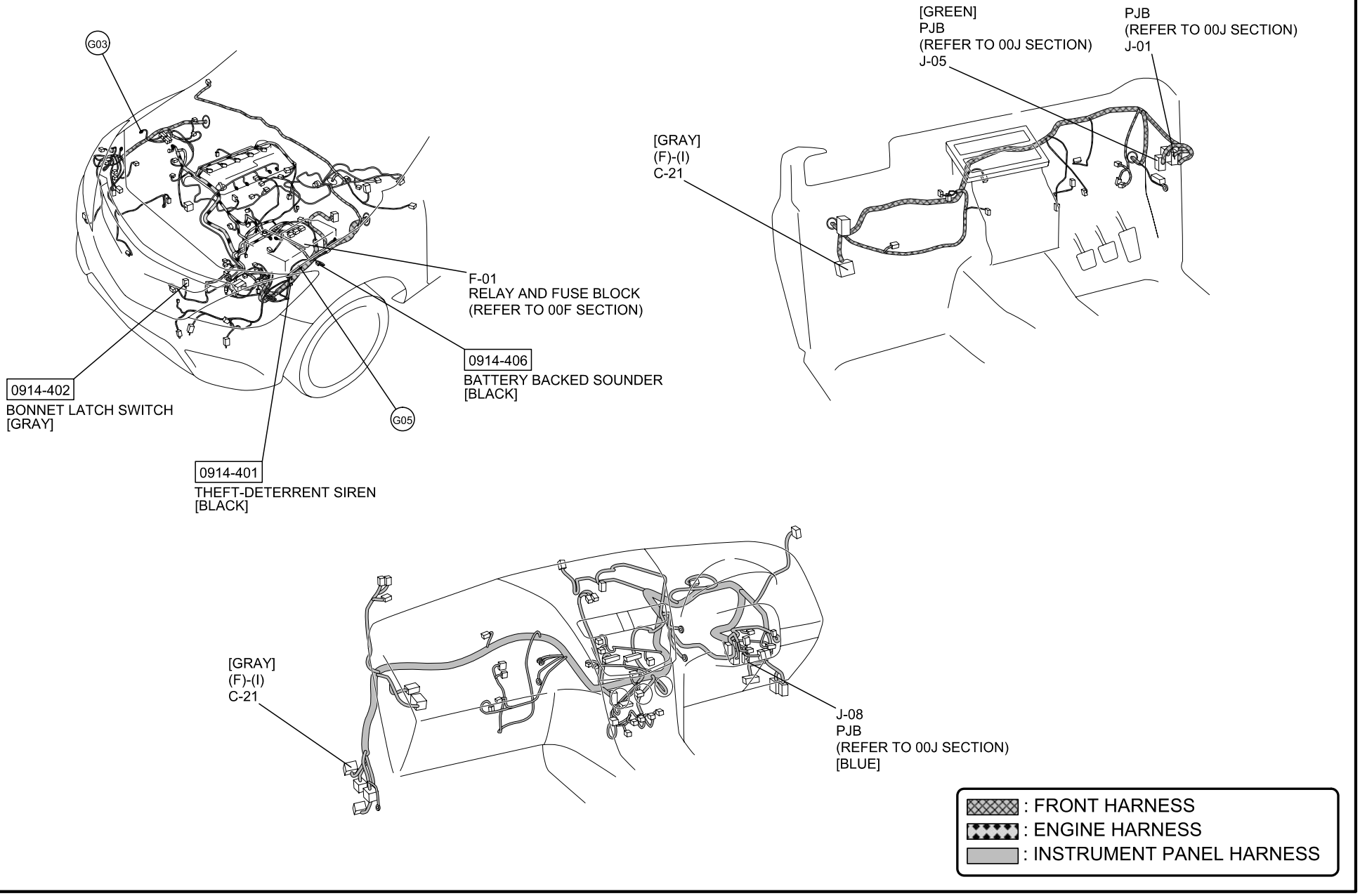
G03
F-01
RELAY AND FUSE BLOCK
(REFER TO 00F SECTION)
0914-406
BATTERY BACKED SOUNDER
[BLACK]
0914-402
BONNET LATCH SWITCH
[GRAY]
G05
0914-401
THEFT-DETERRENT SIREN
[BLACK]
[GREEN]
PJB
(REFER TO 00J SECTION)
J-05
PJB
(REFER TO 00J SECTION)
J-01
[GRAY]
(F)-(I)
C-21
[GRAY]
(F)-(I)
C-21
J-08
PJB
(REFER TO 00J SECTION)
[BLUE]
: FRONT HARNESS
: ENGINE HARNESS
: INSTRUMENT PANEL HARNESS

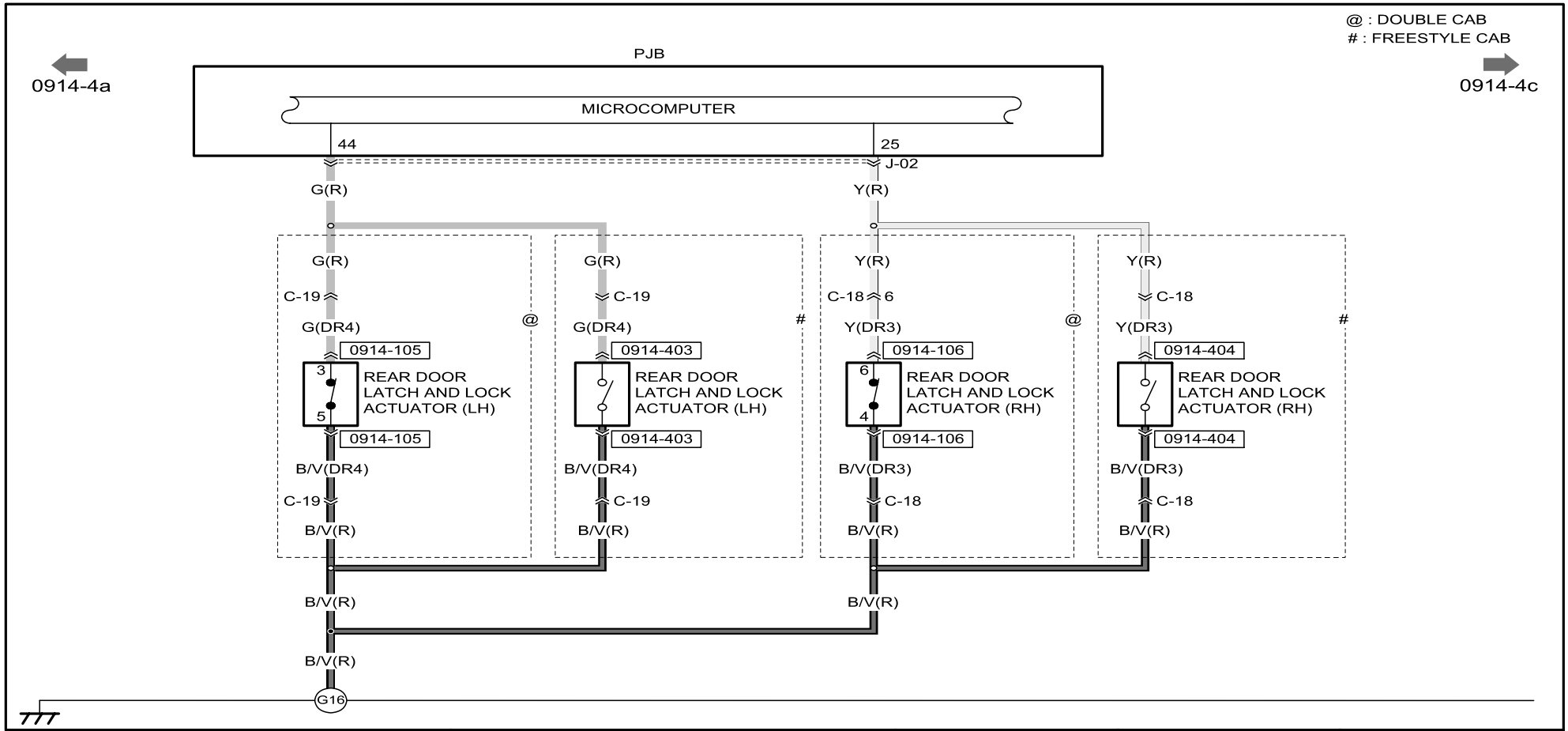

0914-105
REAR DOOR LATCH AND LOCK ACTUATOR (LH)

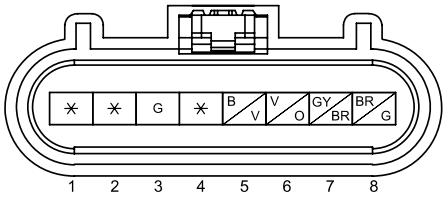

0914-106
REAR DOOR LATCH AND LOCK ACTUATOR (RH)

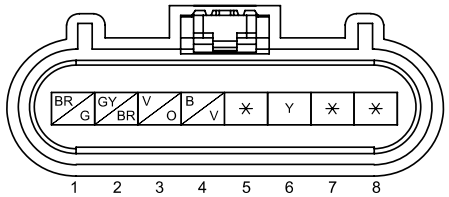

0914-403
REAR DOOR LATCH AND LOCK ACTUATOR (LH)

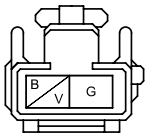

0914-404
REAR DOOR LATCH AND LOCK ACTUATOR (RH)

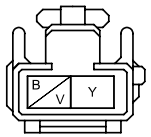

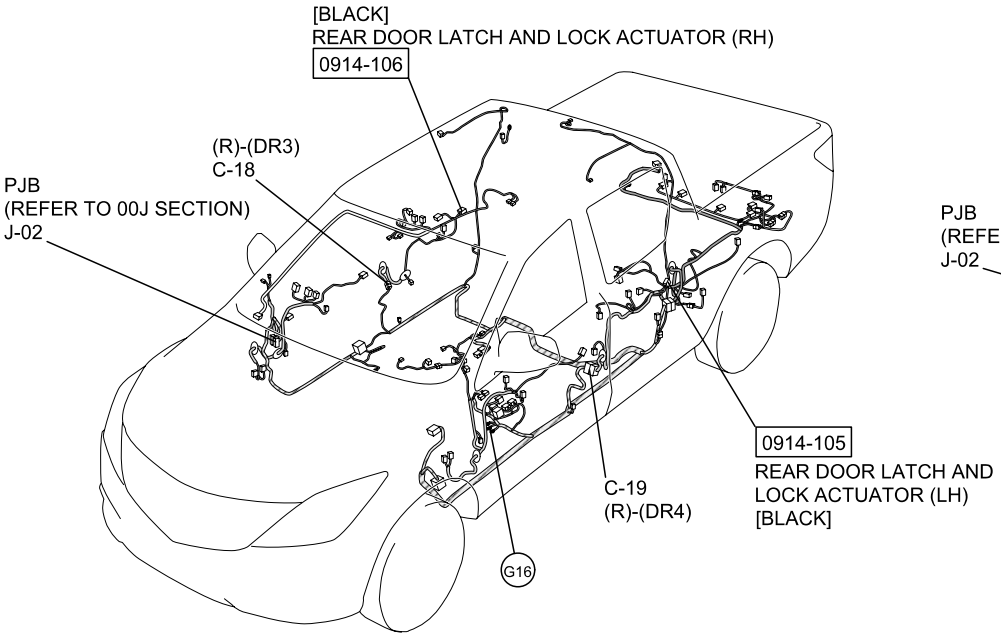

[DOUBLE CAB]

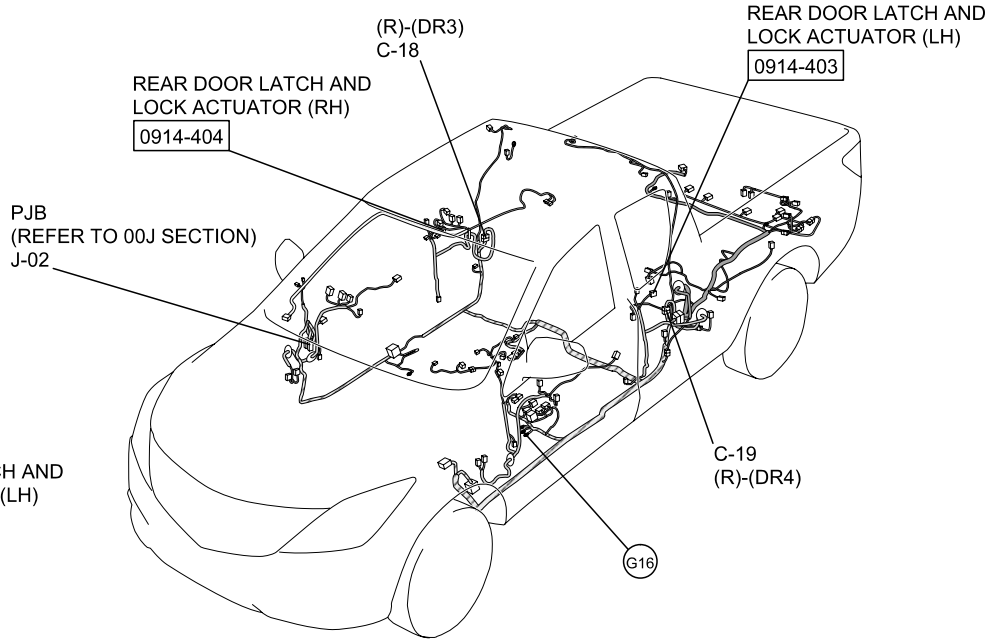

[FREESTYLE CAB]

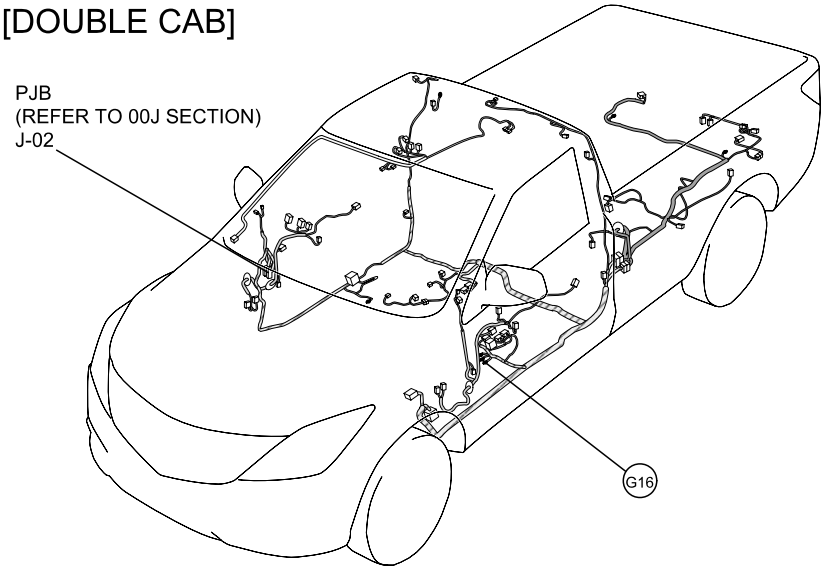

[REGULAR CAB]

: REAR HARNESS
: REAR NO.2 HARNESS
REAR NO.3 HARNESS
: DOOR HARNESS
: INTERIOR LIGHT HARNESS

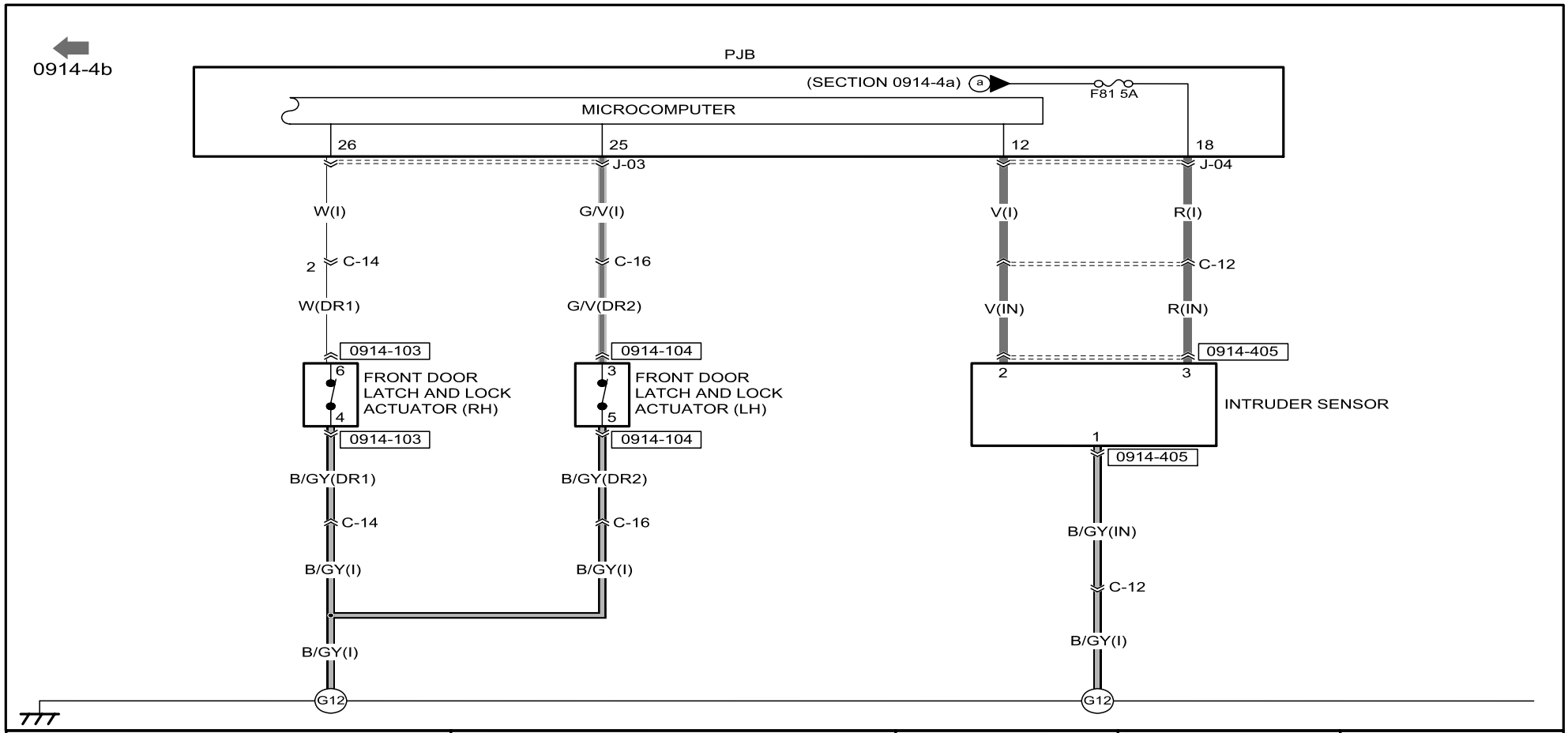

0914-103
FRONT DOOR LATCH AND LOCK ACTUATOR (RH)

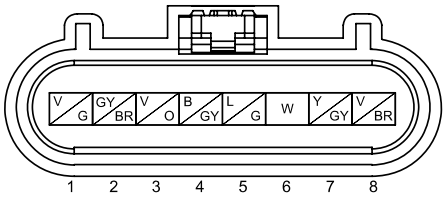

0914-104
FRONT DOOR LATCH AND LOCK ACTUATOR (LH)

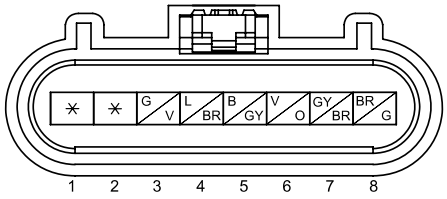

0914-405
INTRUDER SENSOR

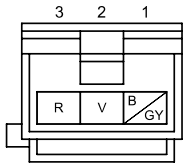

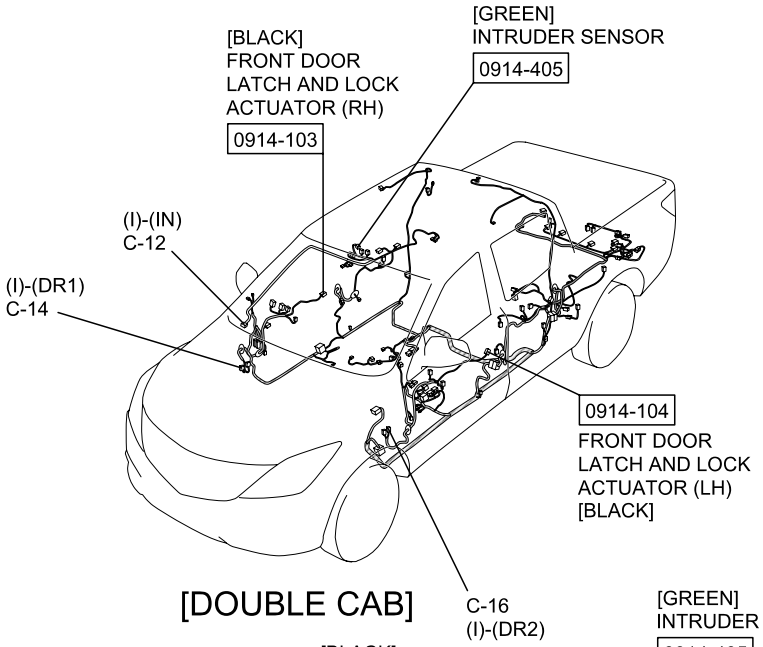

[DOUBLE CAB]

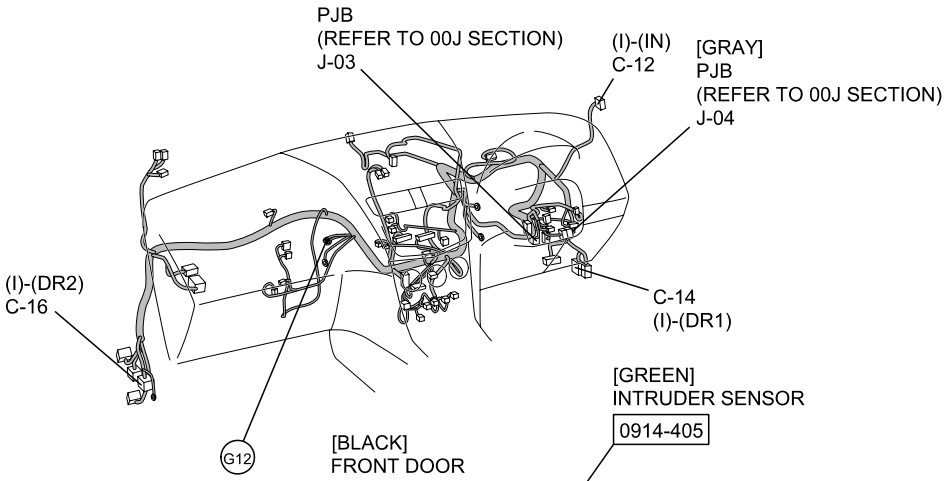

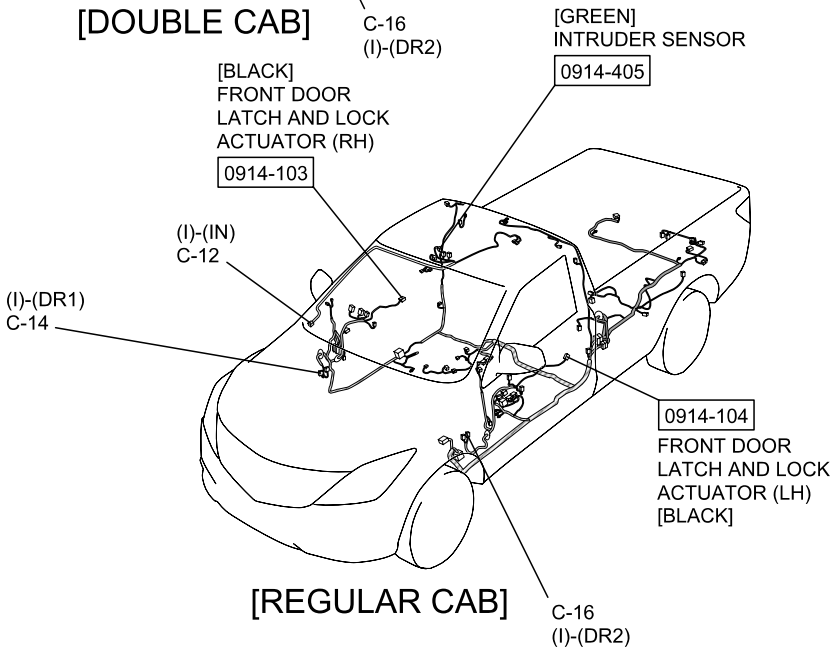

[REGULAR CAB]

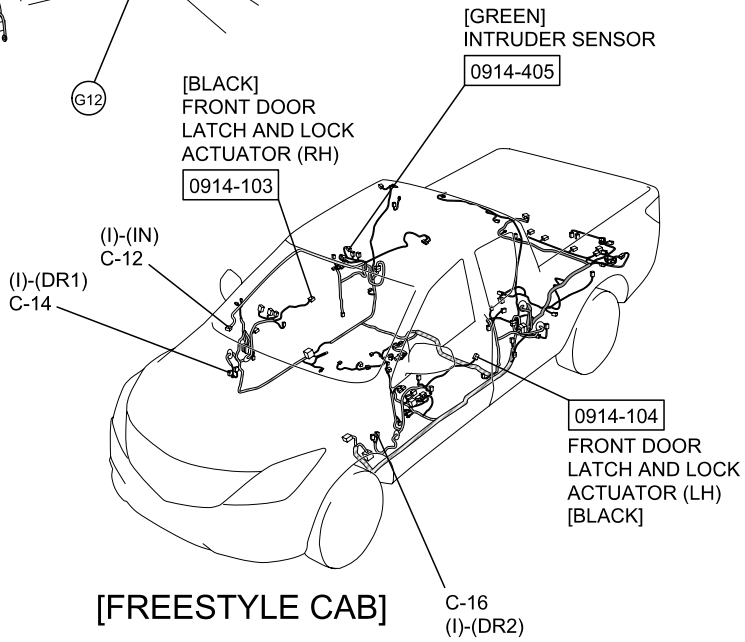

[FREESTYLE CAB]

: REAR HARNESS
: REAR NO.2 HARNESS
REAR NO.3 HARNESS
: DOOR HARNESS
: INTERIOR LIGHT HARNESS
: INSTRUMENT PANEL HARNESS

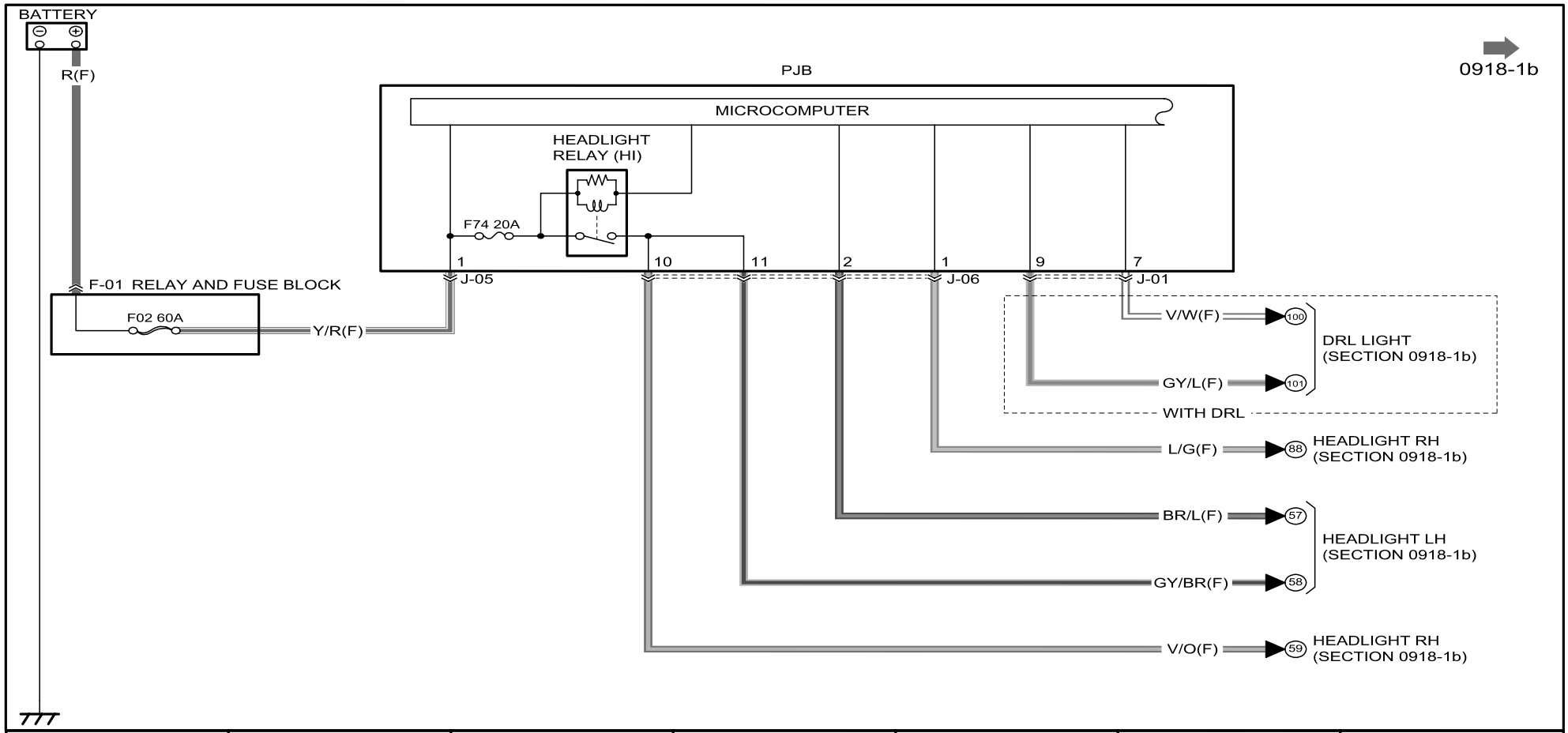
BATTERY
R(F)
PJB
MICROCOMPUTER
HEADLIGHT
RELAY (HI)
F74 20A
1
10
11
2
1
9
7
J-05
J-06
J-01
F-01 RELAY AND FUSE BLOCK
F02 60A
Y/R(F)
V/W(F)
100
DRL LIGHT
(SECTION 0918-1b)
GY/L(F)
101
WITH DRL
L/G(F)
88
HEADLIGHT RH
(SECTION 0918-1b)
BR/L(F)
57
HEADLIGHT LH
(SECTION 0918-1b)
GY/BR(F)
58
V/O(F)
59
HEADLIGHT RH
(SECTION 0918-1b)
0918-1b

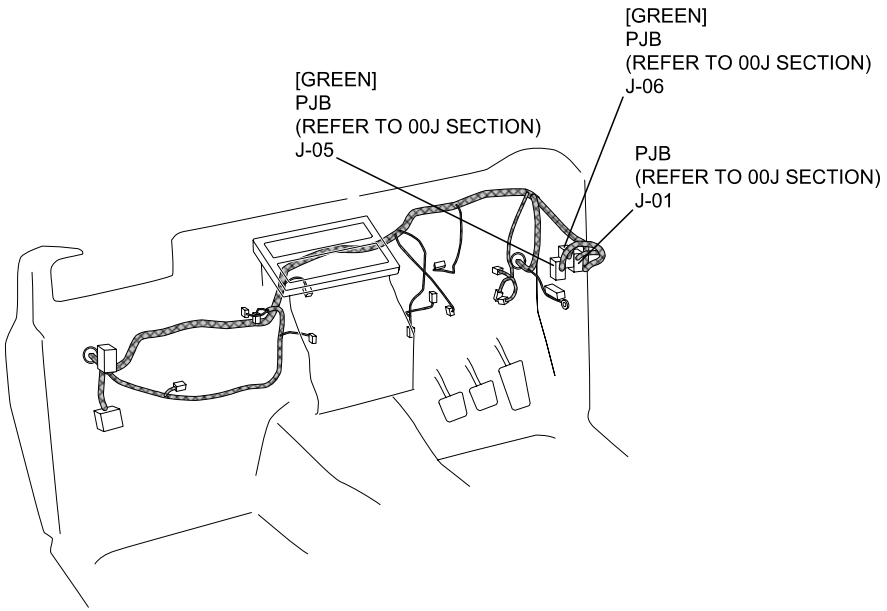

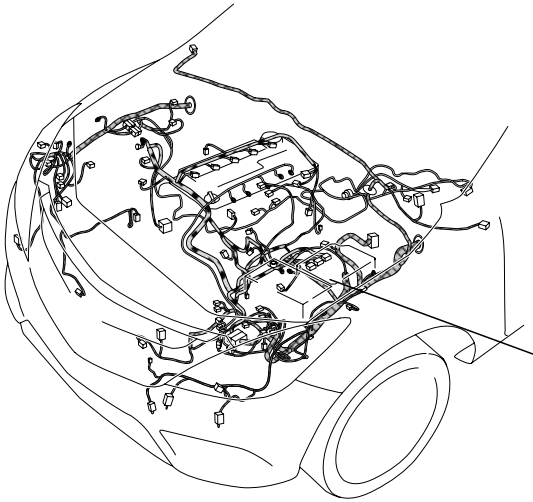

F-01
RELAY AND FUSE BLOCK
(REFER TO 00F SECTION)

: FRONT HARNESS
: ENGINE HARNESS

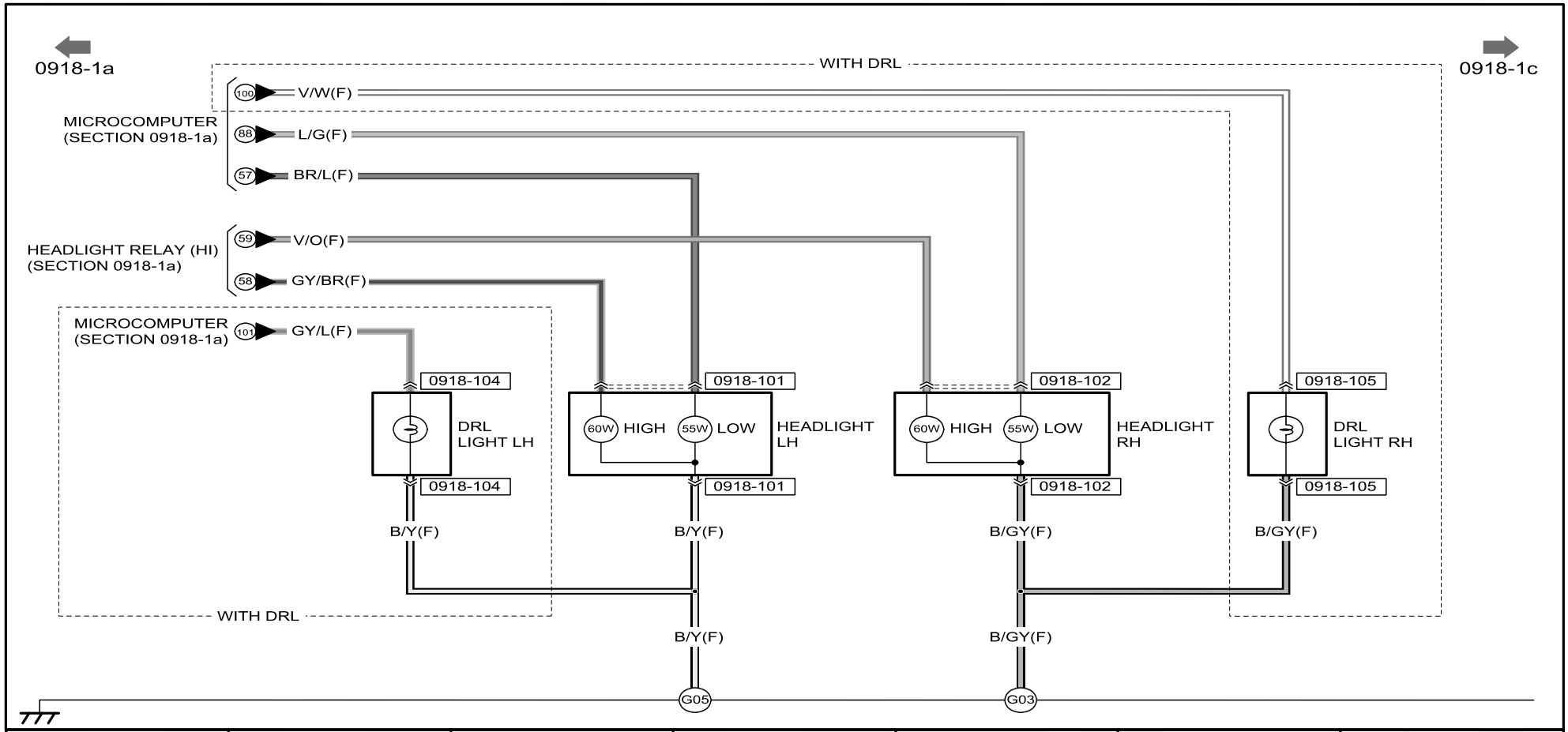

0918-101 HEADLIGHT LH	0918-102 HEADLIGHT RH	0918-104 DRL LIGHT LH / PARKING LIGHT LH	0918-105 DRL LIGHT RH / PARKING LIGHT RH			
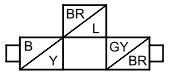	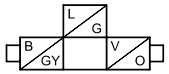	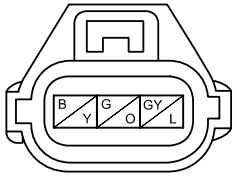	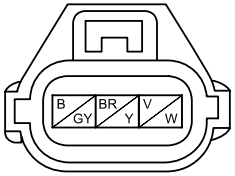			

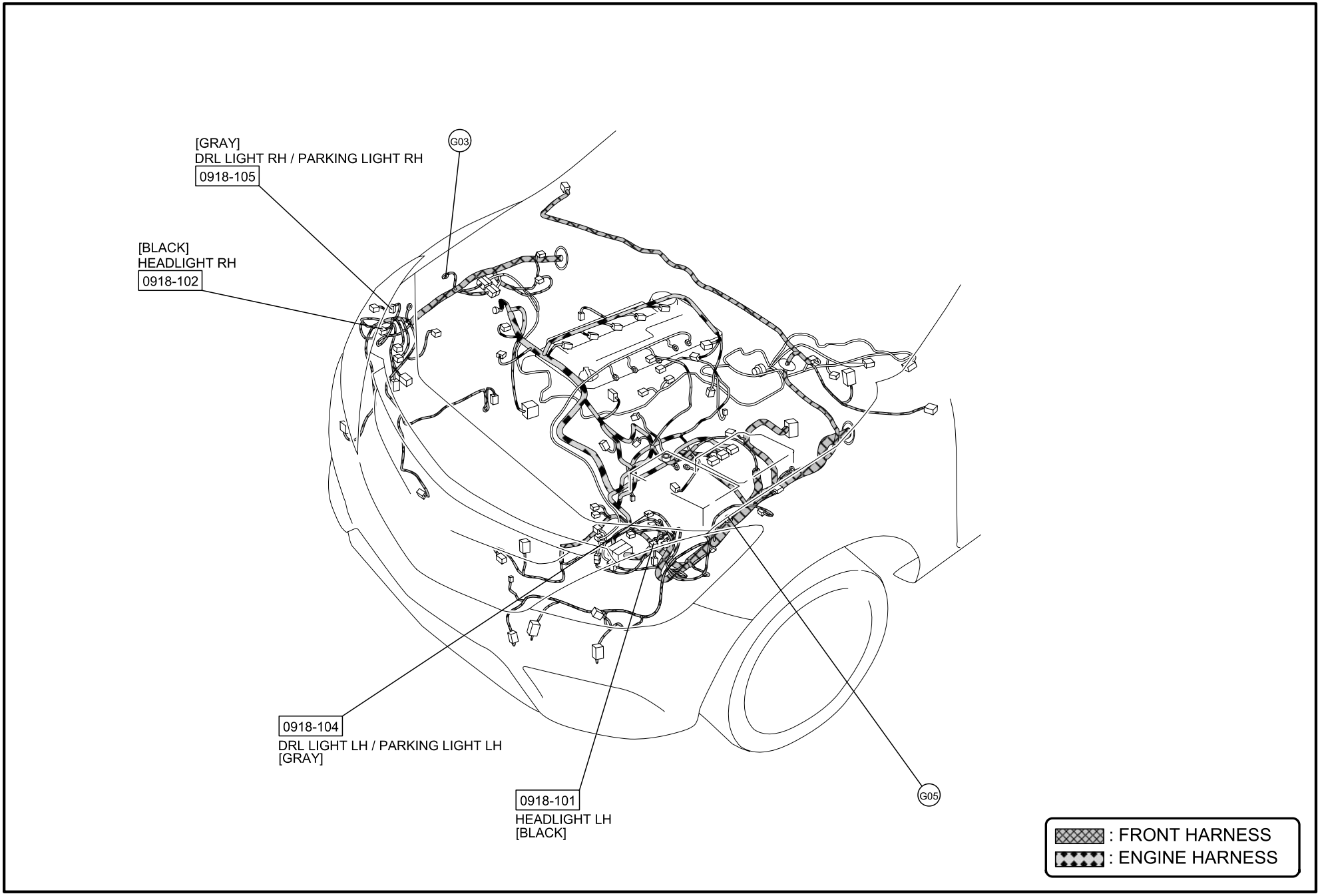
[GRAY]
DRL LIGHT RH / PARKING LIGHT RH
0918-105
G03
[BLACK]
HEADLIGHT RH
0918-102
0918-104
DRL LIGHT LH / PARKING LIGHT LH
[GRAY]
0918-101
HEADLIGHT LH
[BLACK]
G05
: FRONT HARNESS
: ENGINE HARNESS

: WITH REAR FOG LIGHT
& : WITHOUT REAR FOG LIGHT

0918-1b

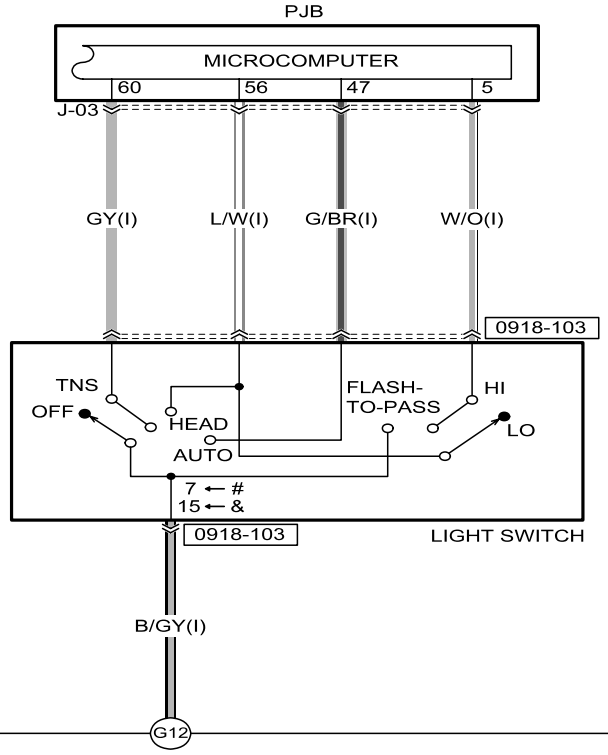

0918-103
LIGHT SWITCH /
FRONT FOG LIGHT SWITCH /
TURN SWITCH /
REAR FOG LIGHT SWITCH

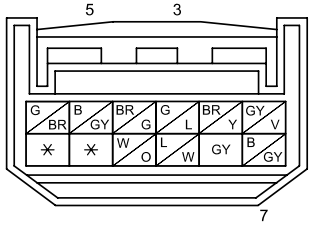

(WITH REAR FOG LIGHT)

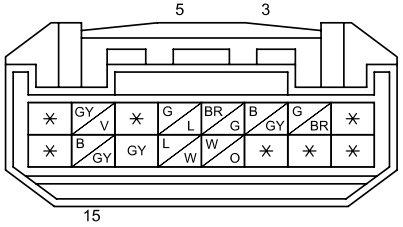

(WITHOUT REAR FOG LIGHT)

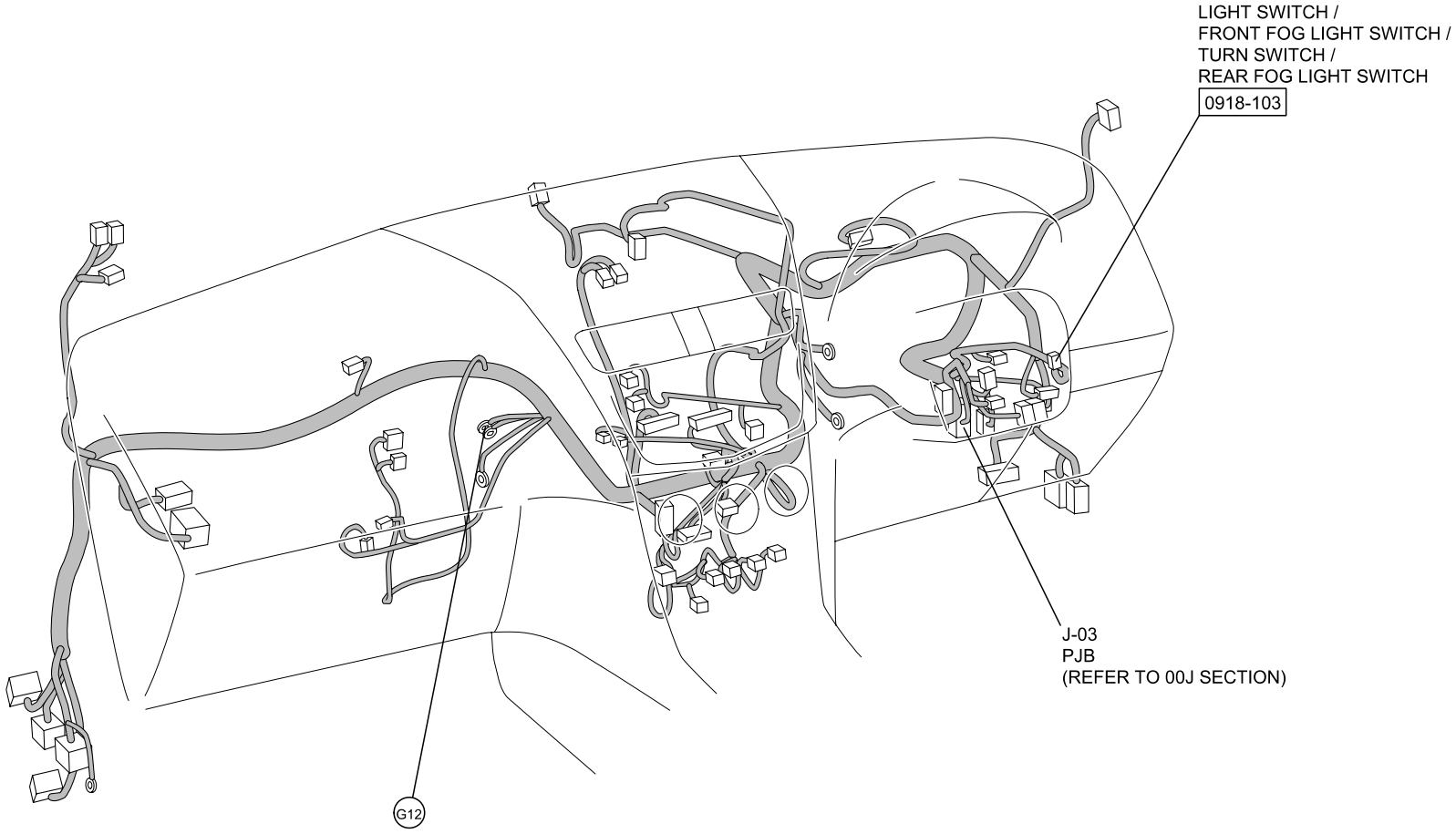

: INSTRUMENT PANEL HARNESS

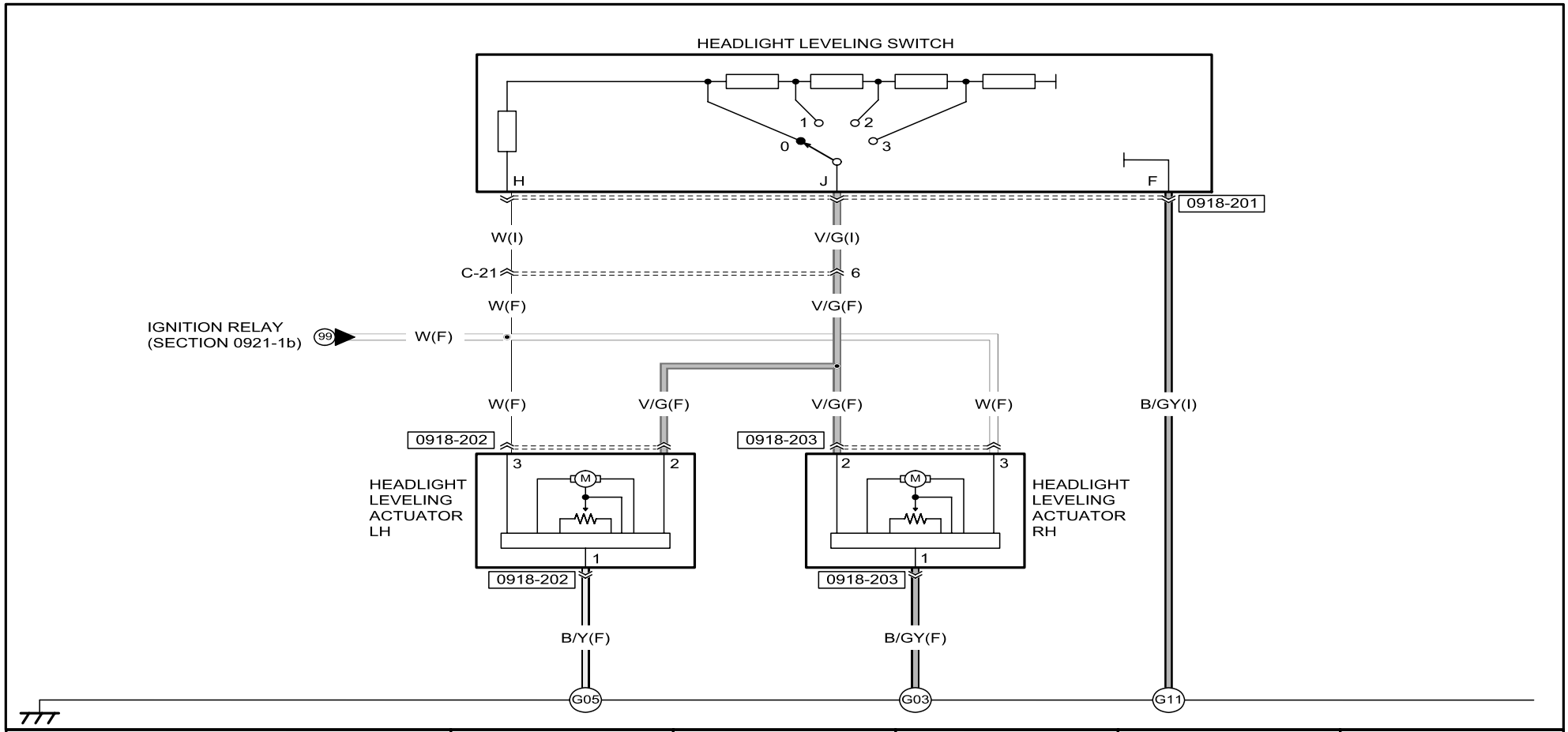

0918-201
HEADLIGHT LEVELING SWITCH

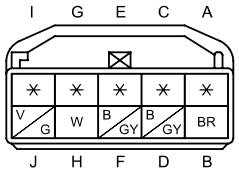

0918-202
HEADLIGHT LEVELING
ACTUATOR LH

0918-203
HEADLIGHT LEVELING
ACTUATOR RH

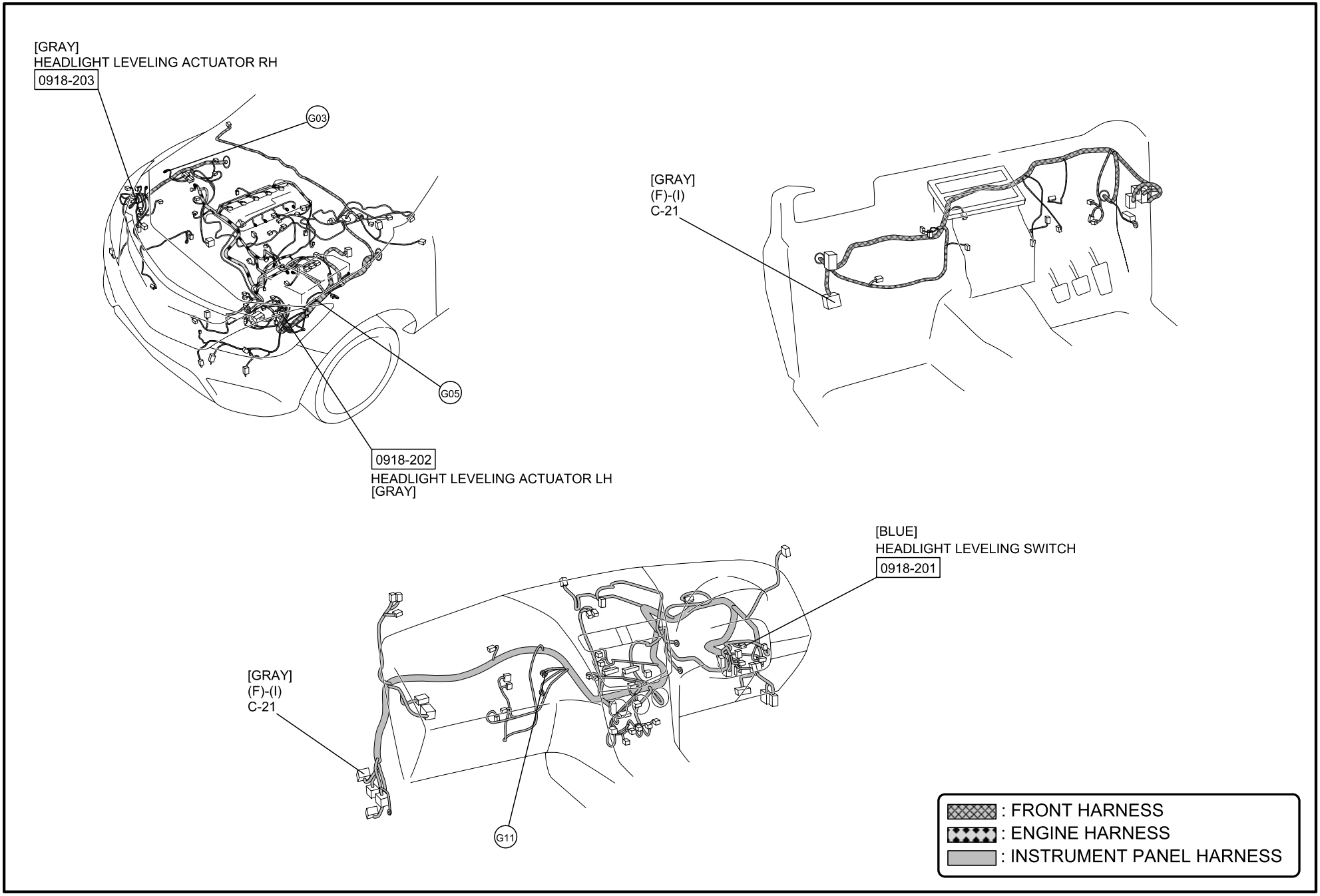
[GRAY]
HEADLIGHT LEVELING ACTUATOR RH
0918-203
G03
G05
0918-202
HEADLIGHT LEVELING ACTUATOR LH
[GRAY]
[GRAY]
(F)-(I)
C-21
[BLUE]
HEADLIGHT LEVELING SWITCH
0918-201
[GRAY]
(F)-(I)
C-21
G11
: FRONT HARNESS
: ENGINE HARNESS
: INSTRUMENT PANEL HARNESS

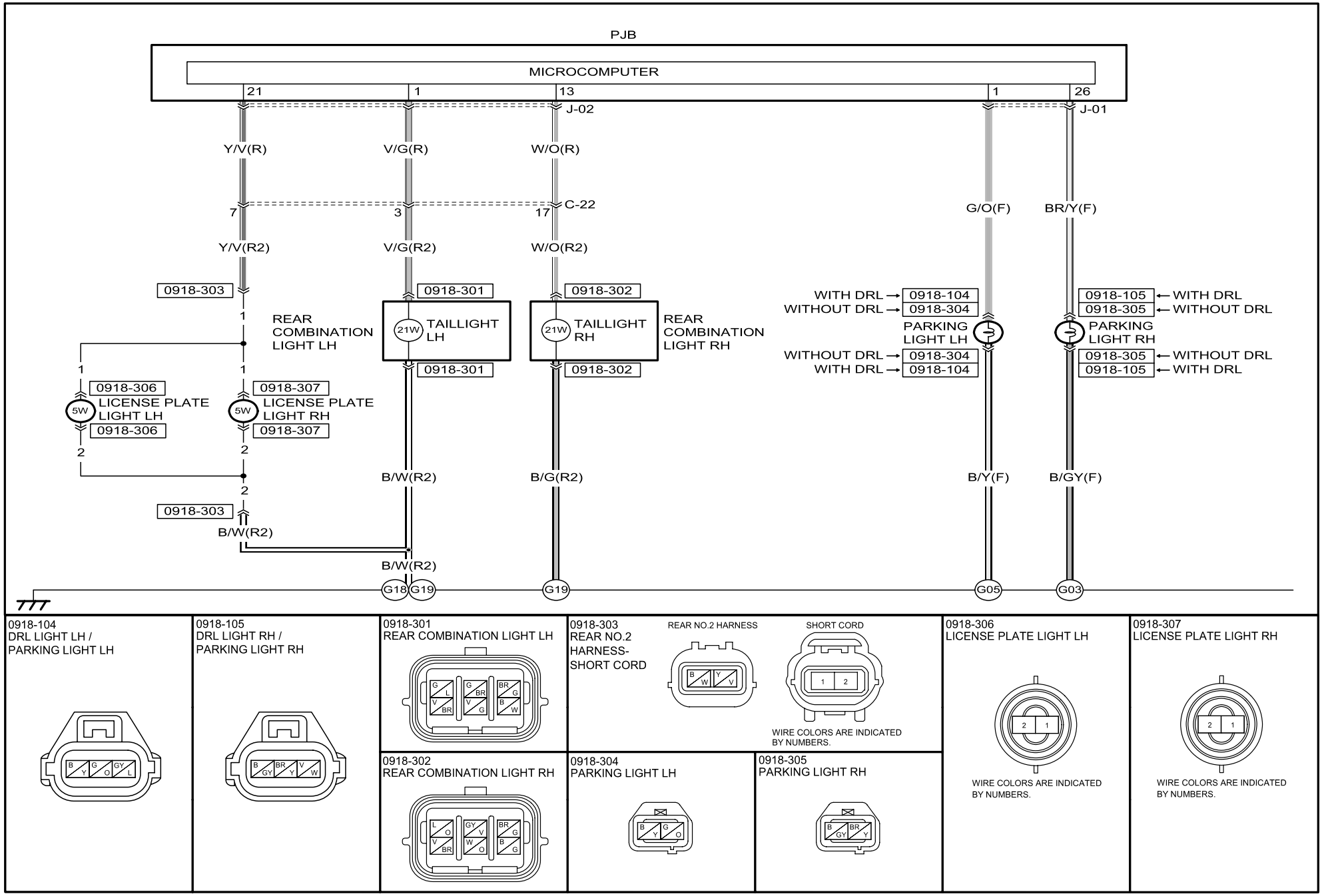

0918-104
DRL LIGHT LH / PARKING LIGHT LH

0918-105
DRL LIGHT RH / PARKING LIGHT RH

0918-301
REAR COMBINATION LIGHT LH

0918-303
REAR NO.2 HARNESS-SHORT CORD

WIRE COLORS ARE INDICATED BY NUMBERS.

0918-306
LICENSE PLATE LIGHT LH

WIRE COLORS ARE INDICATED BY NUMBERS.

0918-307
LICENSE PLATE LIGHT RH

WIRE COLORS ARE INDICATED BY NUMBERS.

0918-302
REAR COMBINATION LIGHT RH

0918-304
PARKING LIGHT LH

0918-305
PARKING LIGHT RH

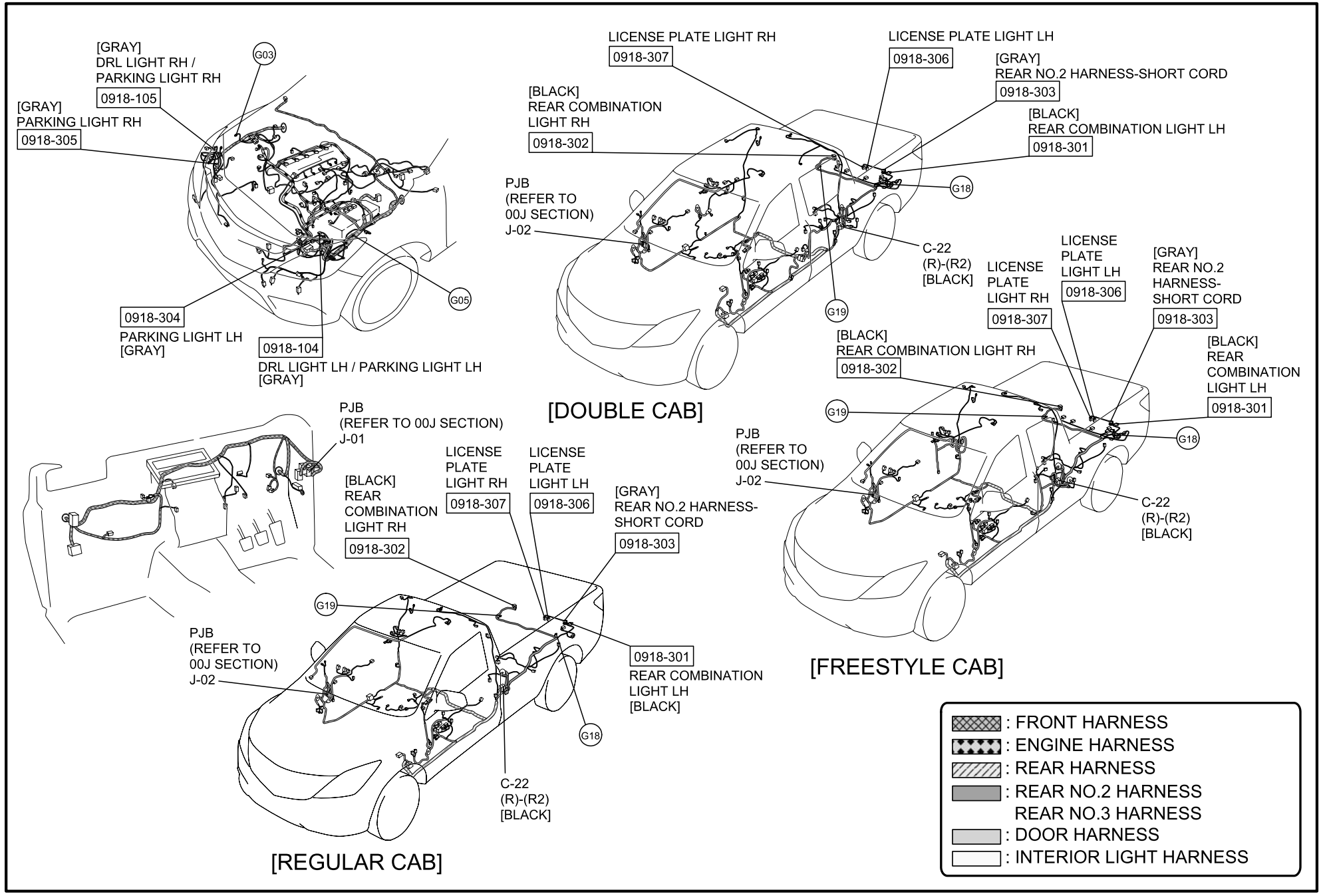
[GRAY]
DRL LIGHT RH /
PARKING LIGHT RH
0918-105
G03
[GRAY]
PARKING LIGHT RH
0918-305
0918-304
PARKING LIGHT LH
[GRAY]
0918-104
DRL LIGHT LH / PARKING LIGHT LH
[GRAY]
G05
LICENSE PLATE LIGHT RH
0918-307
LICENSE PLATE LIGHT LH
0918-306
[GRAY]
REAR NO.2 HARNESS-SHORT CORD
0918-303
[BLACK]
REAR COMBINATION
LIGHT RH
0918-302
[BLACK]
REAR COMBINATION LIGHT LH
0918-301
G18
PJB
(REFER TO
00J SECTION)
J-02
C-22
(R)-(R2)
[BLACK]
G19
[DOUBLE CAB]
LICENSE
PLATE
LIGHT RH
0918-307
LICENSE
PLATE
LIGHT LH
0918-306
[GRAY]
REAR NO.2
HARNESS-
SHORT CORD
0918-303
[BLACK]
REAR COMBINATION LIGHT RH
0918-302
[BLACK]
REAR
COMBINATION
LIGHT LH
0918-301
G19
G18
PJB
(REFER TO
00J SECTION)
J-02
C-22
(R)-(R2)
[BLACK]
[FREESTYLE CAB]
PJB
(REFER TO 00J SECTION)
J-01
[BLACK]
REAR
COMBINATION
LIGHT RH
0918-302
LICENSE
PLATE
LIGHT RH
0918-307
LICENSE
PLATE
LIGHT LH
0918-306
[GRAY]
REAR NO.2 HARNESS-
SHORT CORD
0918-303
G19
PJB
(REFER TO
00J SECTION)
J-02
0918-301
REAR COMBINATION
LIGHT LH
[BLACK]
G18
C-22
(R)-(R2)
[BLACK]
[REGULAR CAB]
: FRONT HARNESS
: ENGINE HARNESS
: REAR HARNESS
: REAR NO.2 HARNESS
REAR NO.3 HARNESS
: DOOR HARNESS
: INTERIOR LIGHT HARNESS

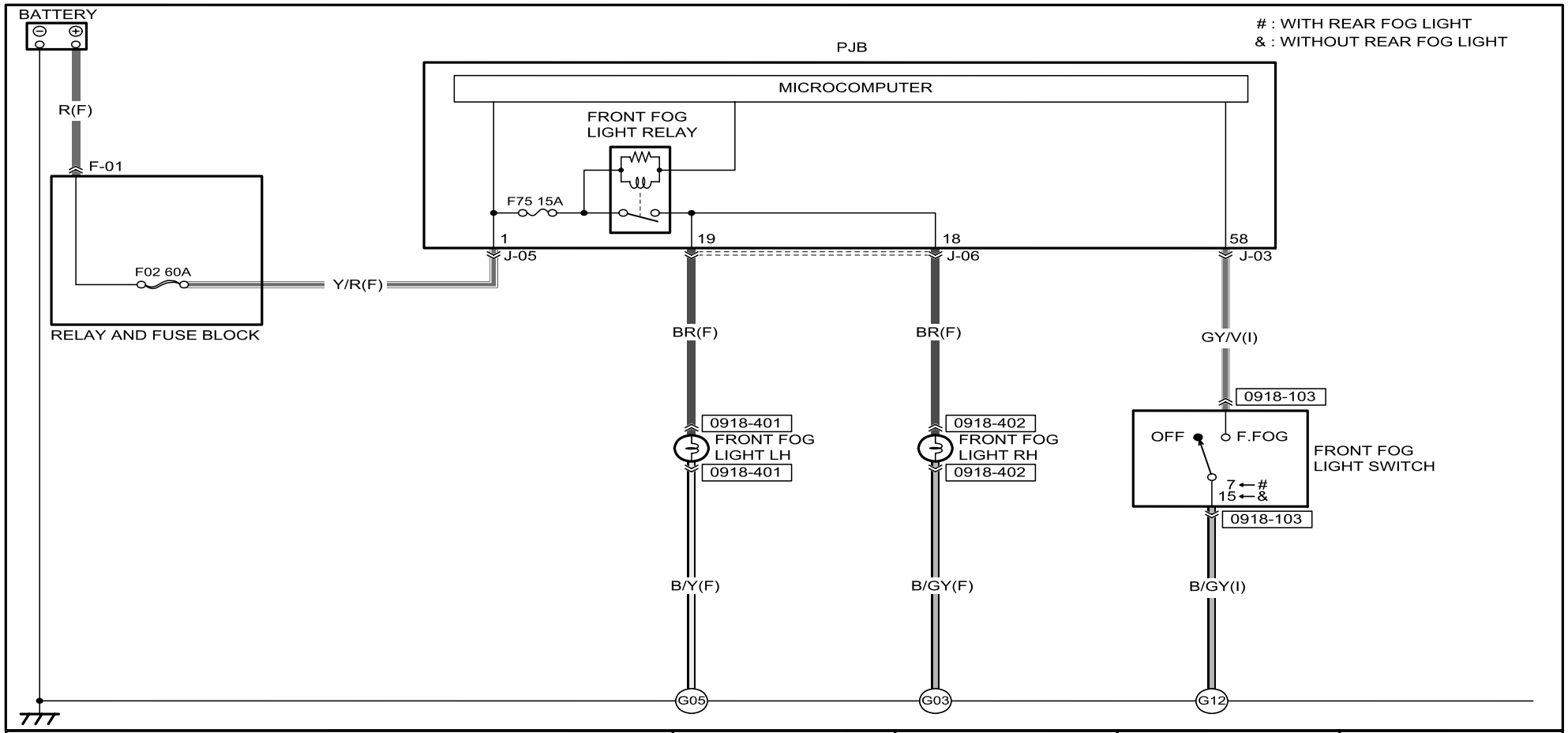

0918-103
LIGHT SWITCH /
FRONT FOG LIGHT SWITCH /
TURN SWITCH /
REAR FOG LIGHT SWITCH

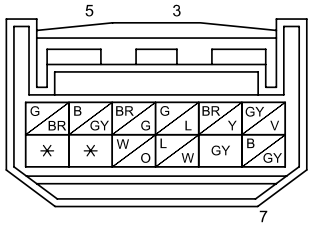

(WITH REAR FOG LIGHT)

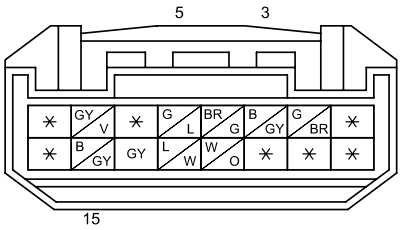

(WITHOUT REAR FOG LIGHT)

0918-401
FRONT FOG LIGHT LH

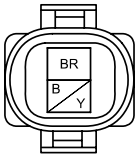

0918-402
FRONT FOG LIGHT RH

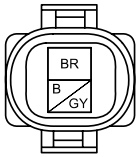

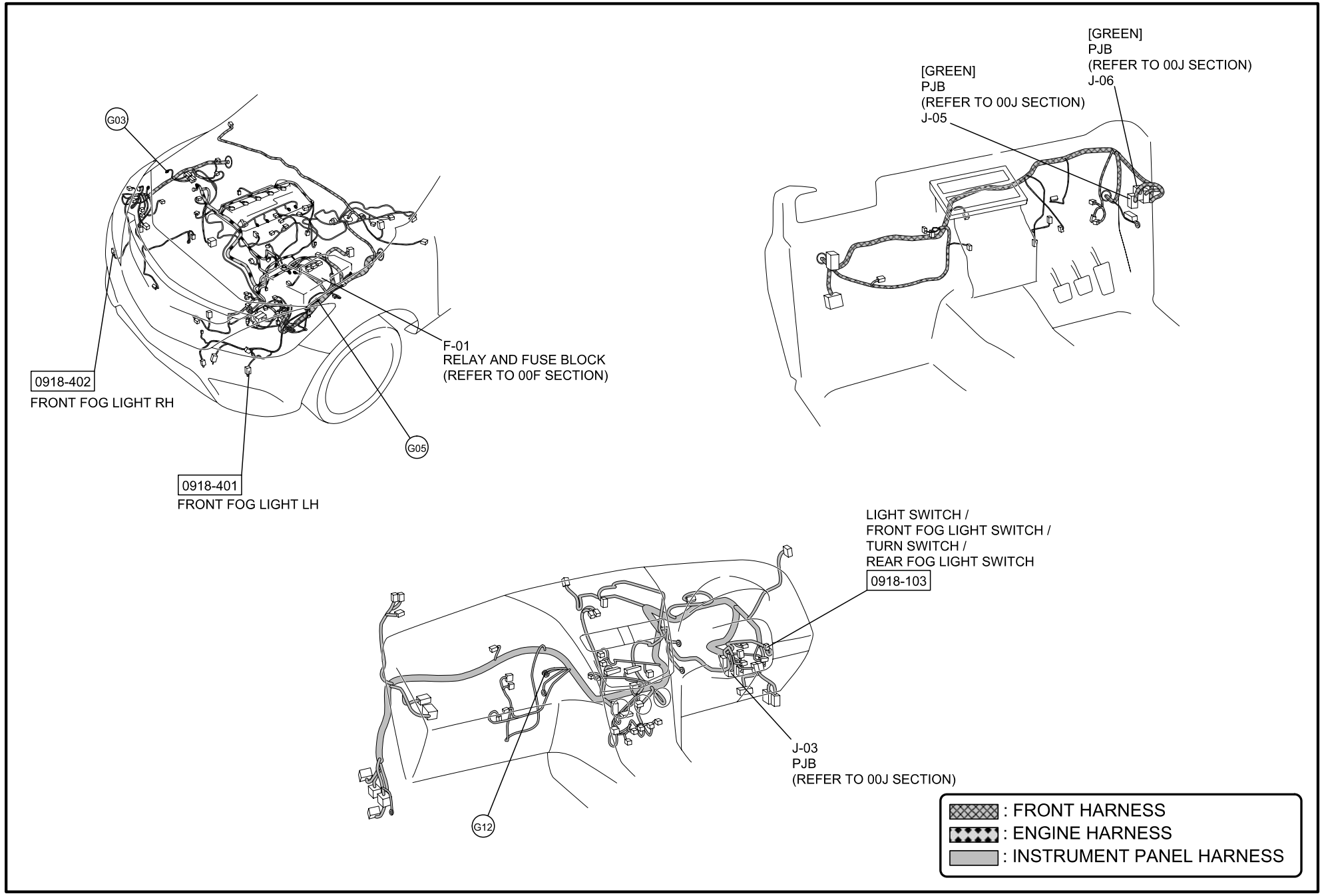
G03
0918-402
FRONT FOG LIGHT RH
F-01
RELAY AND FUSE BLOCK
(REFER TO 00F SECTION)
G05
0918-401
FRONT FOG LIGHT LH
[GREEN]
PJB
(REFER TO 00J SECTION)
J-05
[GREEN]
PJB
(REFER TO 00J SECTION)
J-06
LIGHT SWITCH /
FRONT FOG LIGHT SWITCH /
TURN SWITCH /
REAR FOG LIGHT SWITCH
0918-103
J-03
PJB
(REFER TO 00J SECTION)
G12
: FRONT HARNESS
: ENGINE HARNESS
: INSTRUMENT PANEL HARNESS

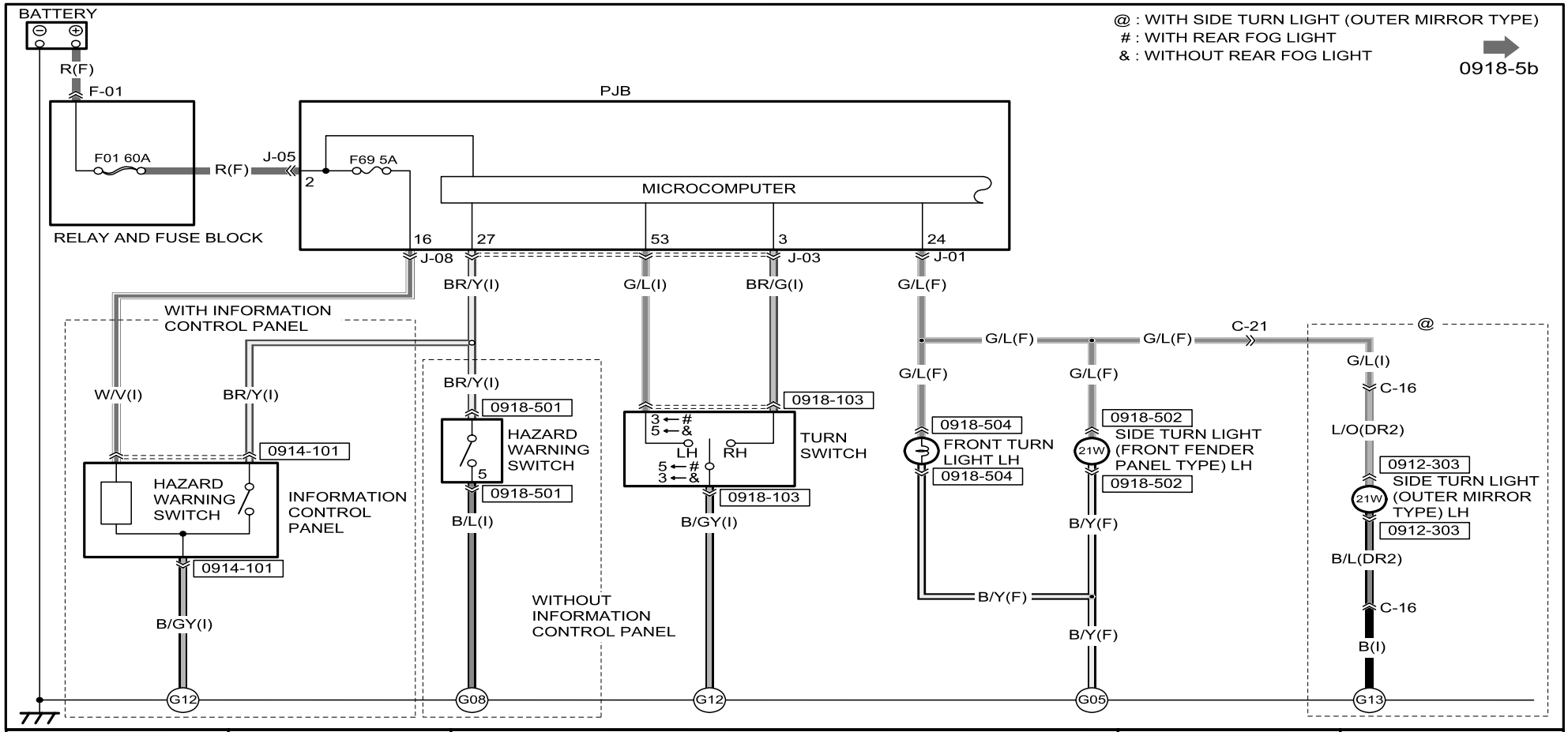

0912-303
POWER OUTER MIRROR LH / RETRACTABLE OUTER MIRROR LH / SIDE TURN LIGHT (OUTER MIRROR TYPE) LH / HEATED OUTER MIRROR LH

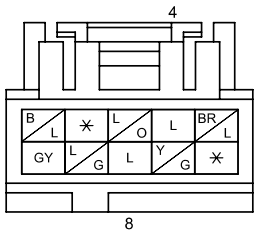

0914-101
INFORMATION CONTROL PANEL

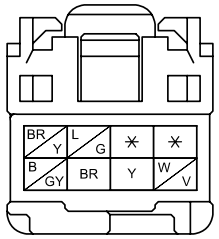

0918-103
LIGHT SWITCH / FRONT FOG LIGHT SWITCH / TURN SWITCH / REAR FOG LIGHT SWITCH

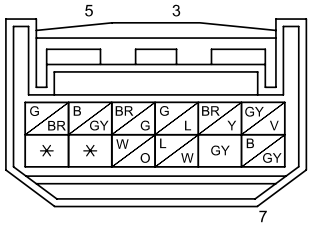

(WITH REAR FOG LIGHT)

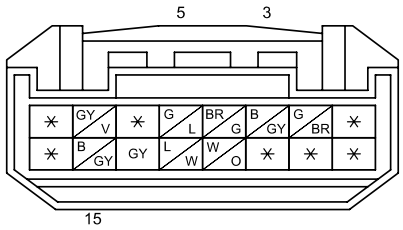

(WITHOUT REAR FOG LIGHT)

0918-501
HAZARD WARNING SWITCH

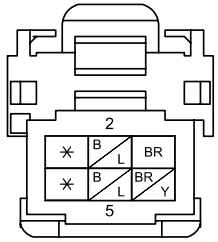

0918-502
SIDE TURN LIGHT (FRONT FENDER PANEL TYPE) LH

0918-504
FRONT TURN LIGHT LH

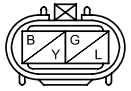

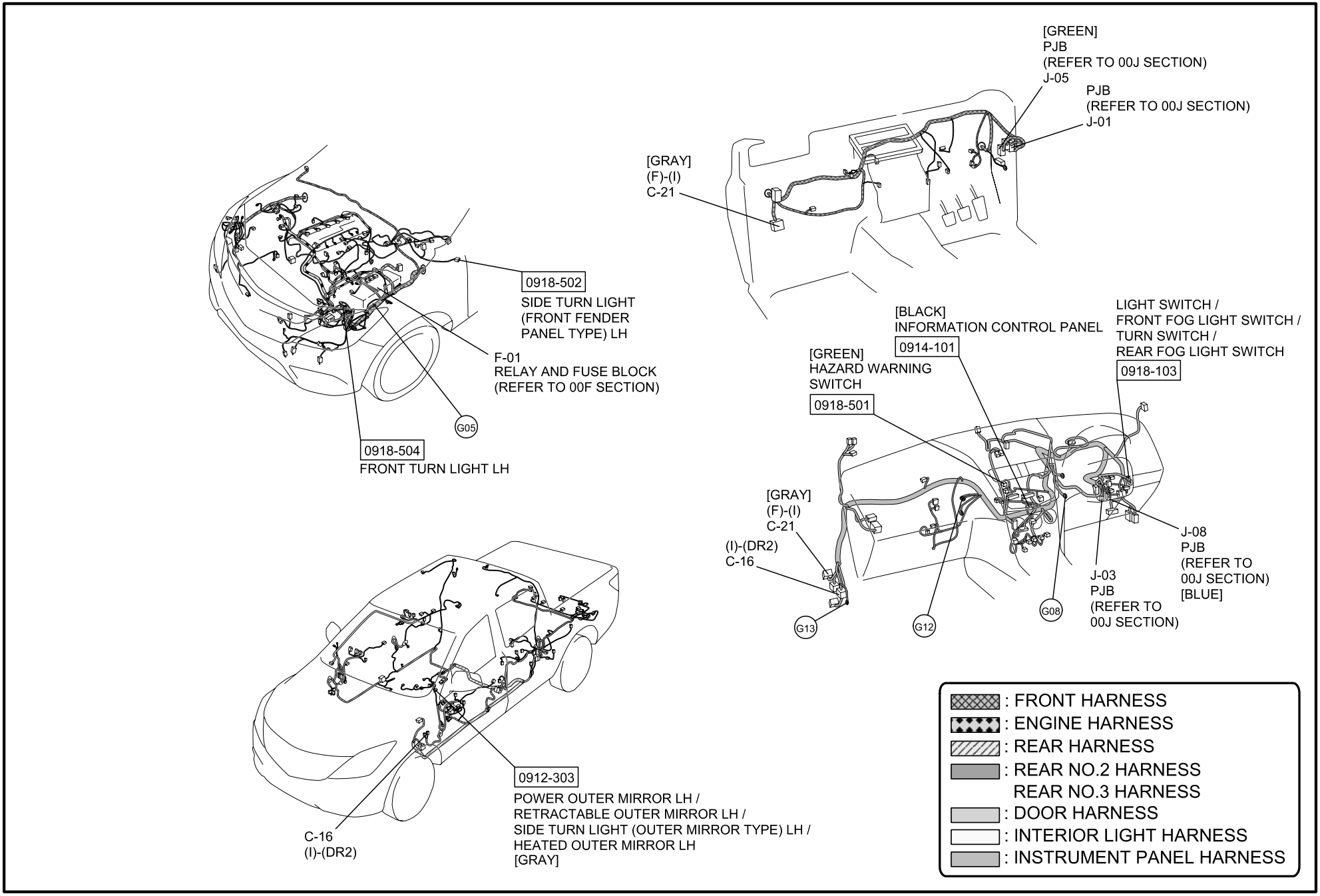
[GREEN]
PJB
(REFER TO 00J SECTION)
J-05
PJB
(REFER TO 00J SECTION)
J-01
[GRAY]
(F)-(I)
C-21
0918-502
SIDE TURN LIGHT
(FRONT FENDER
PANEL TYPE) LH
F-01
RELAY AND FUSE BLOCK
(REFER TO 00F SECTION)
G05
0918-504
FRONT TURN LIGHT LH
[BLACK]
INFORMATION CONTROL PANEL
0914-101
LIGHT SWITCH /
FRONT FOG LIGHT SWITCH /
TURN SWITCH /
REAR FOG LIGHT SWITCH
0918-103
[GREEN]
HAZARD WARNING
SWITCH
0918-501
[GRAY]
(F)-(I)
C-21
(I)-(DR2)
C-16
J-08
PJB
(REFER TO
00J SECTION)
[BLUE]
J-03
PJB
(REFER TO
00J SECTION)
G08
G12
G13
0912-303
POWER OUTER MIRROR LH /
RETRACTABLE OUTER MIRROR LH /
SIDE TURN LIGHT (OUTER MIRROR TYPE) LH /
HEATED OUTER MIRROR LH
[GRAY]
C-16
(I)-(DR2)
: FRONT HARNESS
: ENGINE HARNESS
: REAR HARNESS
: REAR NO.2 HARNESS
REAR NO.3 HARNESS
: DOOR HARNESS
: INTERIOR LIGHT HARNESS
: INSTRUMENT PANEL HARNESS

@ : WITH SIDE TURN LIGHT (OUTER MIRROR TYPE)

0918-5a

PJB

MICROCOMPUTER

22 J-01 L/O(F) L/O(F) L/O(F) C-21 49 L/O(F) L/O(F) L/O(I) @ 12 C-14 G/L(DR1) B(DR1) C-14 B/L(I) B/GY(F) B/Y(F) G03 G05 G08

0918-505 FRONT TURN LIGHT RH 0918-505

0918-503 21W SIDE TURN LIGHT (FRONT FENDER PANEL TYPE) RH 0918-503

0912-304 21W SIDE TURN LIGHT (OUTER MIRROR TYPE) RH 0912-304

6 G/L(R) 10 G/L(R2) 0918-301 21W REAR TURN LIGHT LH REAR COMBINATION LIGHT LH 0918-301 B/W(R2) G18 G19

3 J-02 L/O(R) 2 C-22 L/O(R2) 0918-302 21W REAR TURN LIGHT RH REAR COMBINATION LIGHT RH 0918-302 B/G(R2) G19

0912-304
POWER OUTER MIRROR RH /
RETRACTABLE OUTER MIRROR RH /
SIDE TURN LIGHT (OUTER MIRROR TYPE) RH /
HEATED OUTER MIRROR RH

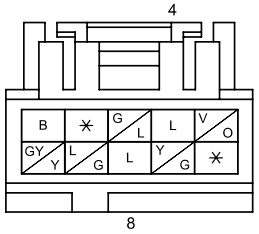

0918-301
REAR COMBINATION LIGHT LH

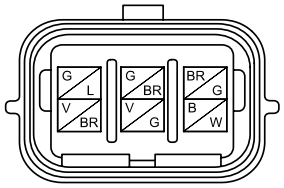

0918-302
REAR COMBINATION LIGHT RH

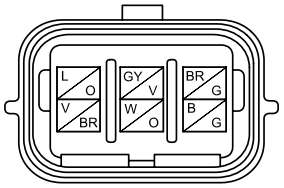

0918-503
SIDE TURN LIGHT
(FRONT FENDER PANEL
TYPE) RH

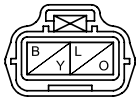

0918-505
FRONT TURN LIGHT RH

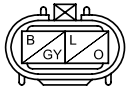

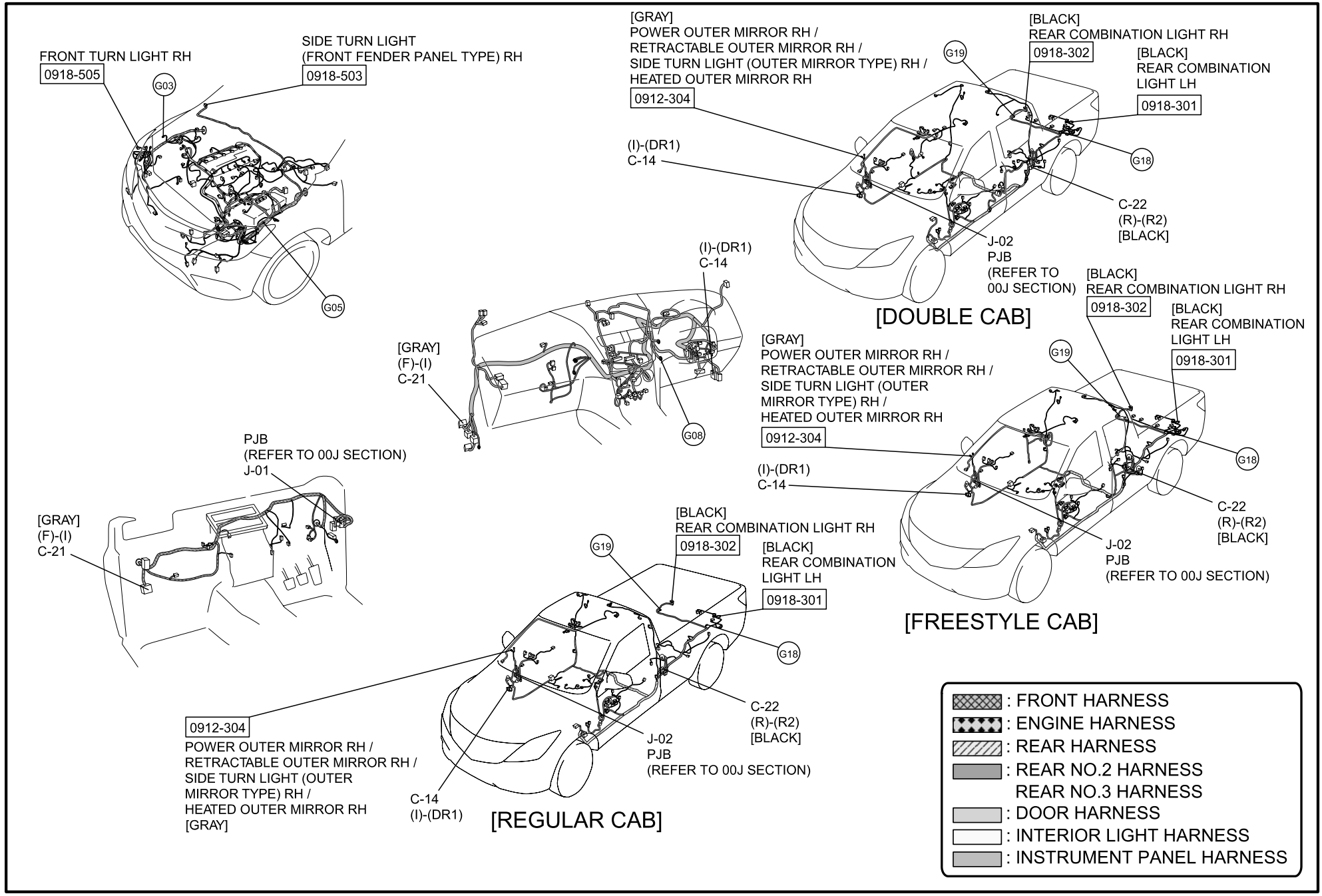
FRONT TURN LIGHT RH
0918-505
G03
SIDE TURN LIGHT
(FRONT FENDER PANEL TYPE) RH
0918-503
G05
[GRAY]
POWER OUTER MIRROR RH /
RETRACTABLE OUTER MIRROR RH /
SIDE TURN LIGHT (OUTER MIRROR TYPE) RH /
HEATED OUTER MIRROR RH
0912-304
(I)-(DR1)
C-14
G19
[BLACK]
REAR COMBINATION LIGHT RH
0918-302
[BLACK]
REAR COMBINATION
LIGHT LH
0918-301
G18
C-22
(R)-(R2)
[BLACK]
J-02
PJB
(REFER TO
00J SECTION)
[DOUBLE CAB]
(I)-(DR1)
C-14
[GRAY]
(F)-(I)
C-21
G08
PJB
(REFER TO 00J SECTION)
J-01
[GRAY]
(F)-(I)
C-21
[GRAY]
POWER OUTER MIRROR RH /
RETRACTABLE OUTER MIRROR RH /
SIDE TURN LIGHT (OUTER
MIRROR TYPE) RH /
HEATED OUTER MIRROR RH
0912-304
(I)-(DR1)
C-14
G19
[BLACK]
REAR COMBINATION LIGHT RH
0918-302
[BLACK]
REAR COMBINATION
LIGHT LH
0918-301
G18
C-22
(R)-(R2)
[BLACK]
J-02
PJB
(REFER TO 00J SECTION)
[FREESTYLE CAB]
[BLACK]
REAR COMBINATION LIGHT RH
0918-302
G19
[BLACK]
REAR COMBINATION
LIGHT LH
0918-301
G18
C-22
(R)-(R2)
[BLACK]
J-02
PJB
(REFER TO 00J SECTION)
0912-304
POWER OUTER MIRROR RH /
RETRACTABLE OUTER MIRROR RH /
SIDE TURN LIGHT (OUTER
MIRROR TYPE) RH /
HEATED OUTER MIRROR RH
[GRAY]
C-14
(I)-(DR1)
[REGULAR CAB]
: FRONT HARNESS
: ENGINE HARNESS
: REAR HARNESS
: REAR NO.2 HARNESS
REAR NO.3 HARNESS
: DOOR HARNESS
: INTERIOR LIGHT HARNESS
: INSTRUMENT PANEL HARNESS

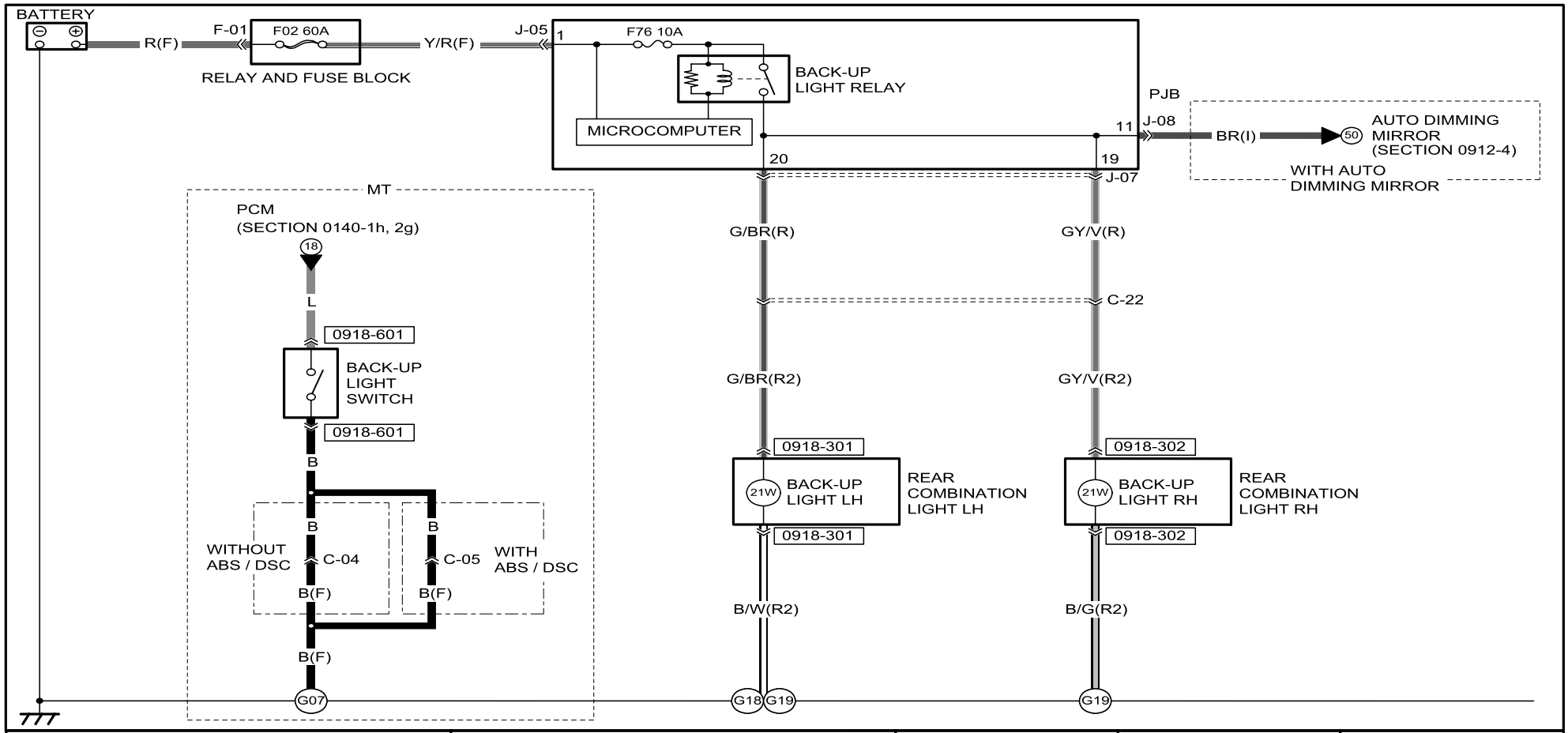

0918-301
REAR COMBINATION LIGHT LH

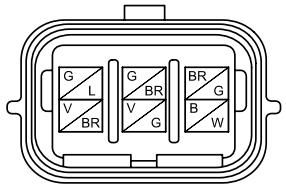

0918-302
REAR COMBINATION LIGHT RH

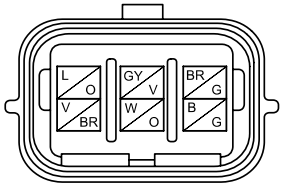

0918-601
BACK-UP LIGHT SWITCH

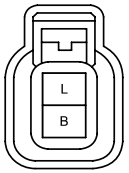

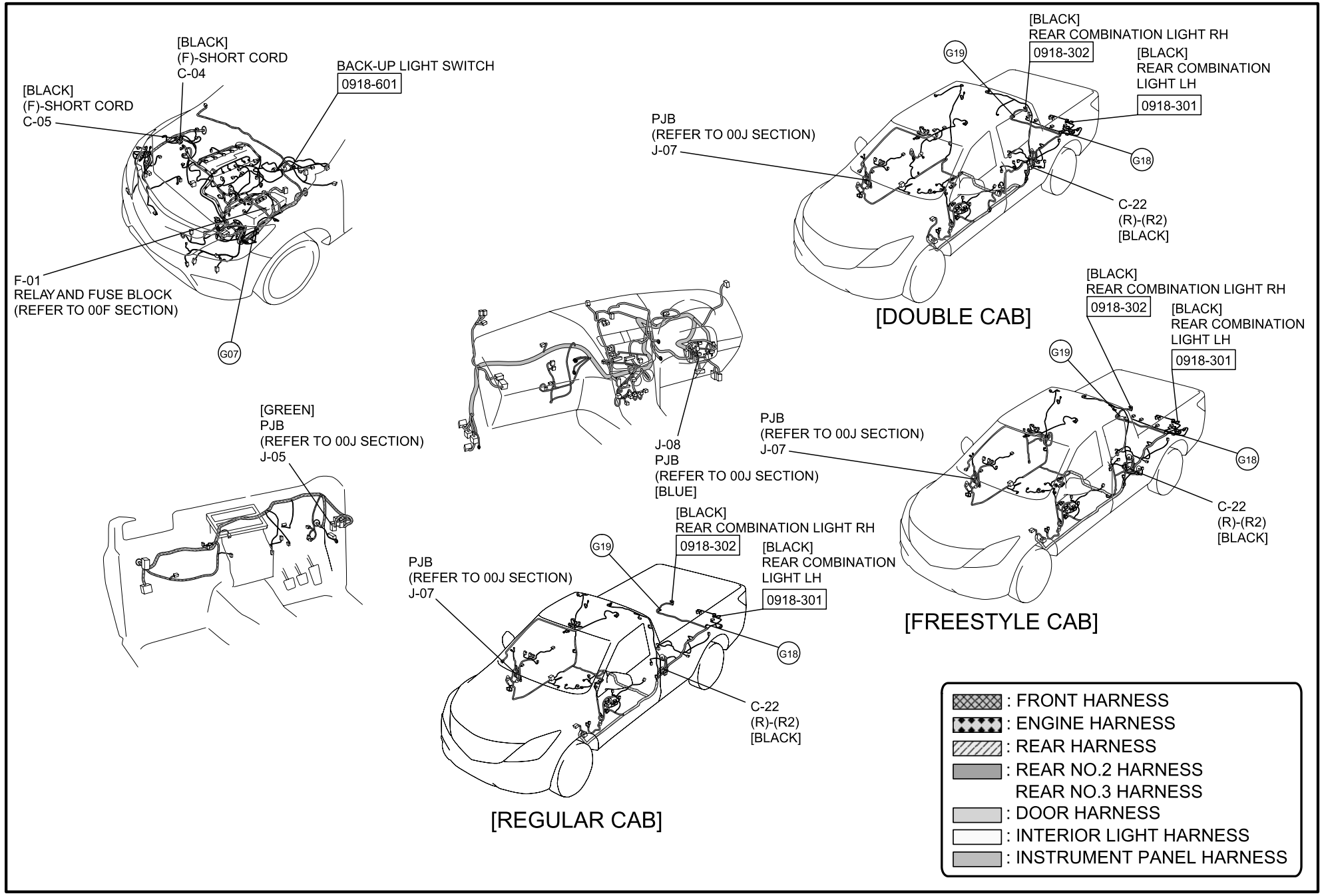
[BLACK]
(F)-SHORT CORD
C-04
BACK-UP LIGHT SWITCH
0918-601
[BLACK]
(F)-SHORT CORD
C-05
F-01
RELAY AND FUSE BLOCK
(REFER TO 00F SECTION)
G07
[BLACK]
REAR COMBINATION LIGHT RH
0918-302
G19
[BLACK]
REAR COMBINATION
LIGHT LH
0918-301
G18
PJB
(REFER TO 00J SECTION)
J-07
C-22
(R)-(R2)
[BLACK]
[DOUBLE CAB]
[BLACK]
REAR COMBINATION LIGHT RH
0918-302
[BLACK]
REAR COMBINATION
LIGHT LH
0918-301
G19
G18
PJB
(REFER TO 00J SECTION)
J-07
C-22
(R)-(R2)
[BLACK]
[FREESTYLE CAB]
[GREEN]
PJB
(REFER TO 00J SECTION)
J-05
J-08
PJB
(REFER TO 00J SECTION)
[BLUE]
[BLACK]
REAR COMBINATION LIGHT RH
0918-302
[BLACK]
REAR COMBINATION
LIGHT LH
0918-301
G19
G18
PJB
(REFER TO 00J SECTION)
J-07
C-22
(R)-(R2)
[BLACK]
[REGULAR CAB]
: FRONT HARNESS
: ENGINE HARNESS
: REAR HARNESS
: REAR NO.2 HARNESS
REAR NO.3 HARNESS
: DOOR HARNESS
: INTERIOR LIGHT HARNESS
: INSTRUMENT PANEL HARNESS

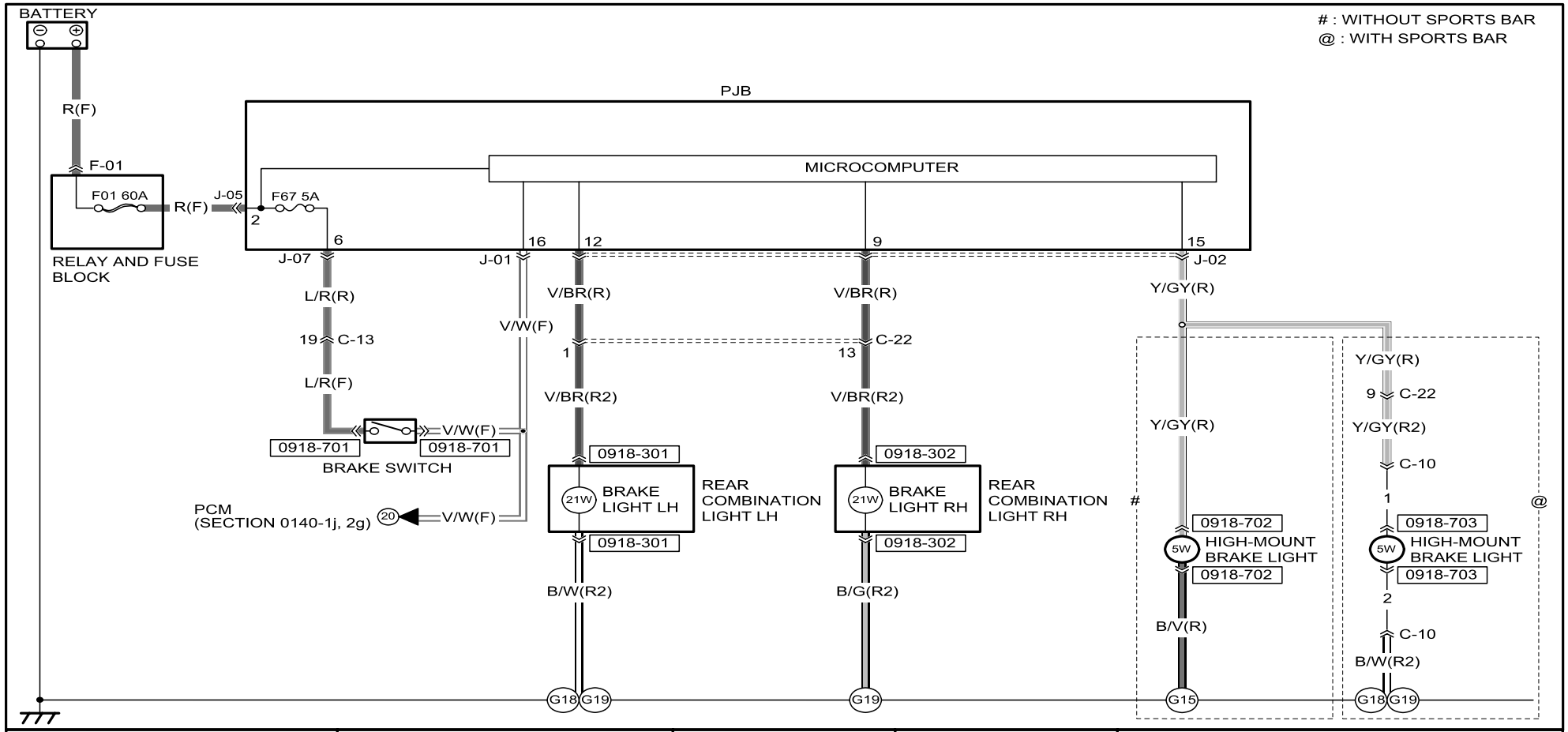

0918-301
REAR COMBINATION LIGHT LH

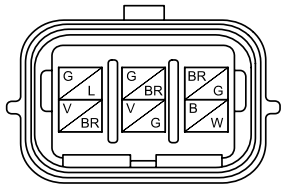

0918-302
REAR COMBINATION LIGHT RH

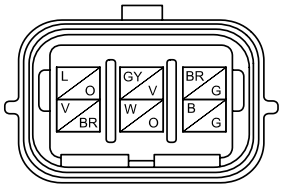

0918-701
BRAKE SWITCH

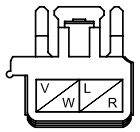

0918-702
HIGH-MOUNT BRAKE LIGHT

0918-703
HIGH-MOUNT BRAKE LIGHT

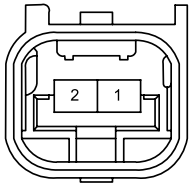

WIRE COLORS ARE INDICATED BY NUMBERS.

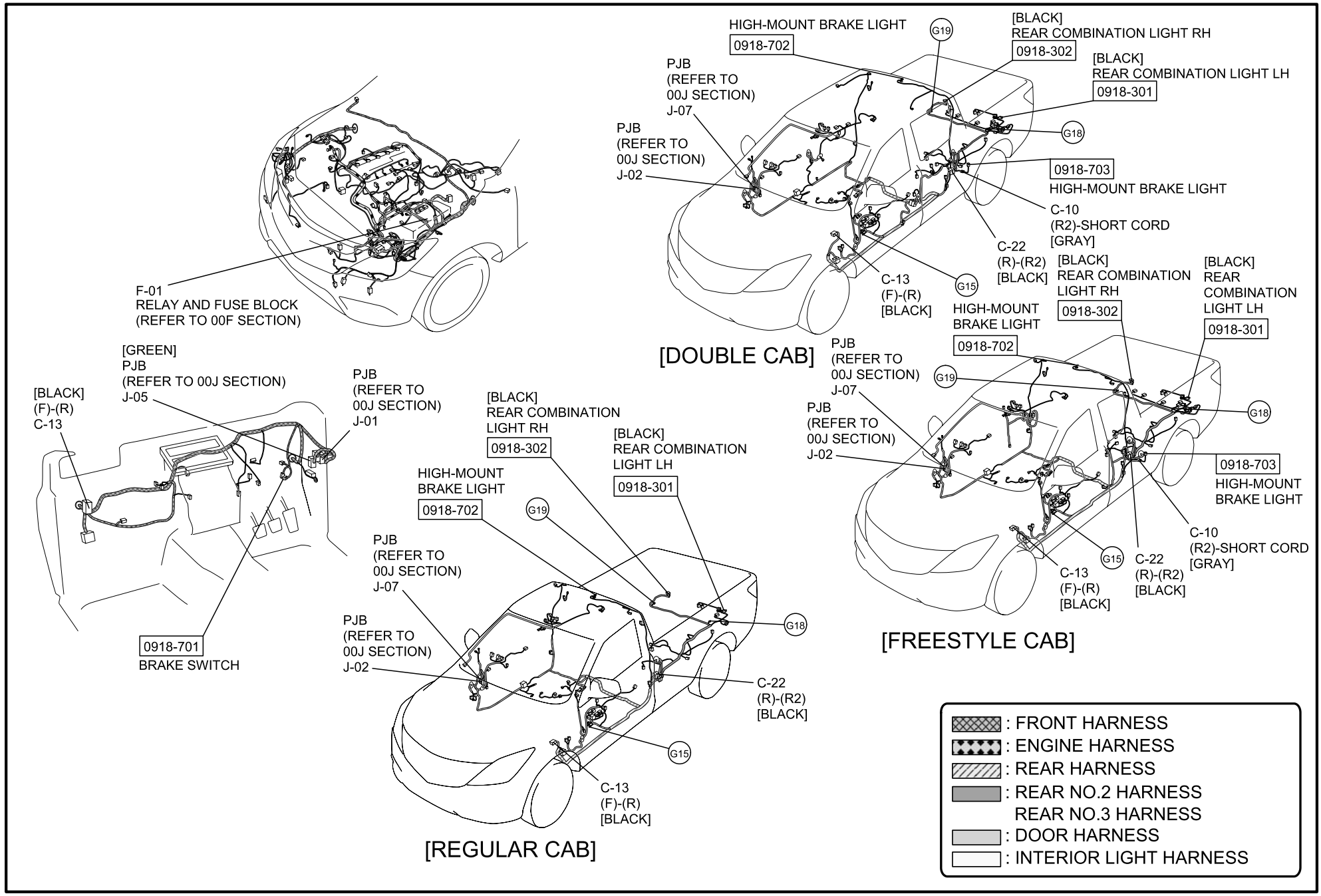
F-01
RELAY AND FUSE BLOCK
(REFER TO 00F SECTION)
HIGH-MOUNT BRAKE LIGHT
0918-702
G19
[BLACK]
REAR COMBINATION LIGHT RH
0918-302
[BLACK]
REAR COMBINATION LIGHT LH
0918-301
PJB
(REFER TO
00J SECTION)
J-07
PJB
(REFER TO
00J SECTION)
J-02
G18
0918-703
HIGH-MOUNT BRAKE LIGHT
C-10
(R2)-SHORT CORD
[GRAY]
C-22
(R)-(R2)
[BLACK]
C-13
(F)-(R)
[BLACK]
G15
[DOUBLE CAB]
[BLACK]
REAR COMBINATION
LIGHT RH
0918-302
[BLACK]
REAR
COMBINATION
LIGHT LH
0918-301
HIGH-MOUNT
BRAKE LIGHT
0918-702
PJB
(REFER TO
00J SECTION)
J-07
G19
G18
PJB
(REFER TO
00J SECTION)
J-02
0918-703
HIGH-MOUNT
BRAKE LIGHT
C-10
(R2)-SHORT CORD
[GRAY]
G15
C-22
(R)-(R2)
[BLACK]
C-13
(F)-(R)
[BLACK]
[FREESTYLE CAB]
[GREEN]
PJB
(REFER TO 00J SECTION)
J-05
[BLACK]
(F)-(R)
C-13
PJB
(REFER TO
00J SECTION)
J-01
0918-701
BRAKE SWITCH
[BLACK]
REAR COMBINATION
LIGHT RH
0918-302
[BLACK]
REAR COMBINATION
LIGHT LH
0918-301
HIGH-MOUNT
BRAKE LIGHT
0918-702
G19
PJB
(REFER TO
00J SECTION)
J-07
PJB
(REFER TO
00J SECTION)
J-02
G18
C-22
(R)-(R2)
[BLACK]
G15
C-13
(F)-(R)
[BLACK]
[REGULAR CAB]
: FRONT HARNESS
: ENGINE HARNESS
: REAR HARNESS
: REAR NO.2 HARNESS
REAR NO.3 HARNESS
: DOOR HARNESS
: INTERIOR LIGHT HARNESS

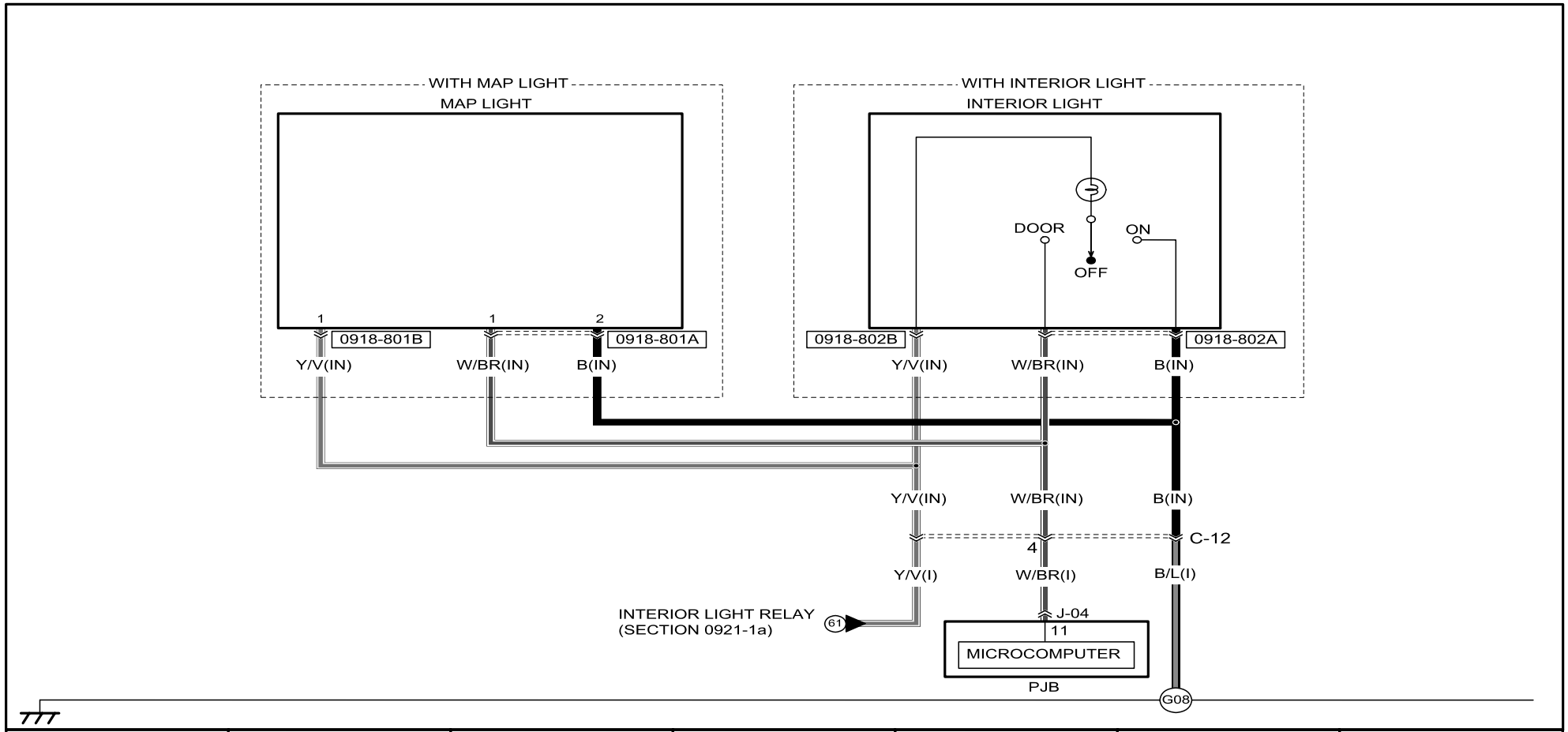

0918-801A MAP LIGHT	0918-801B MAP LIGHT	0918-802A INTERIOR LIGHT	0918-802B INTERIOR LIGHT			
1 W/BR B 2	Y/V 1	W/BR B	Y/V			

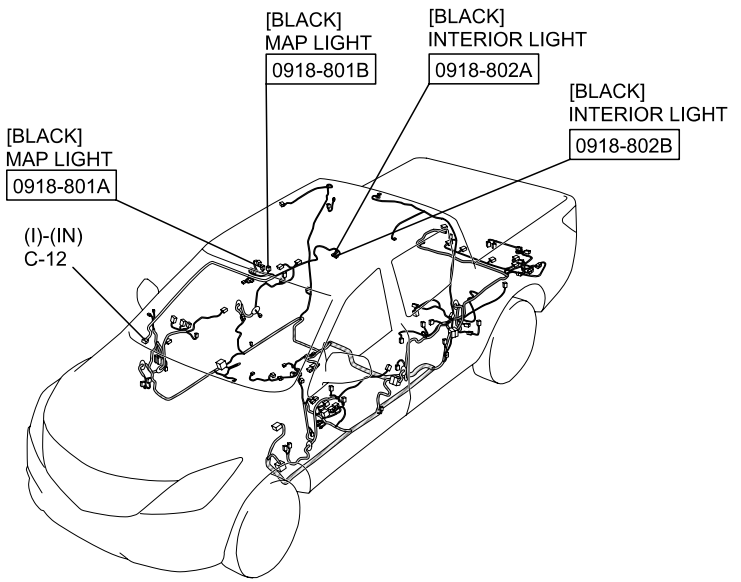

[DOUBLE CAB]

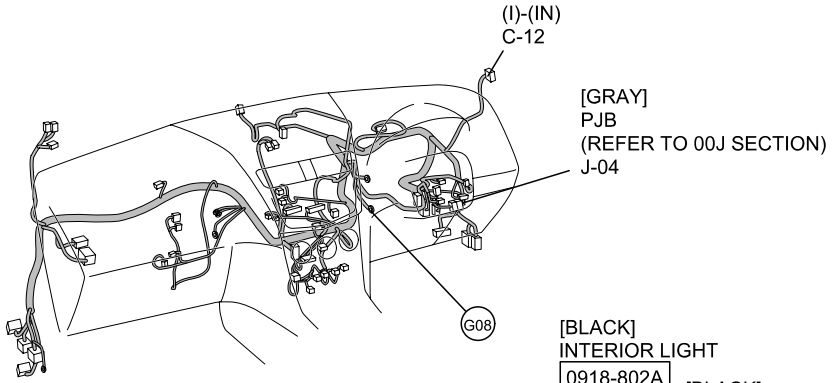

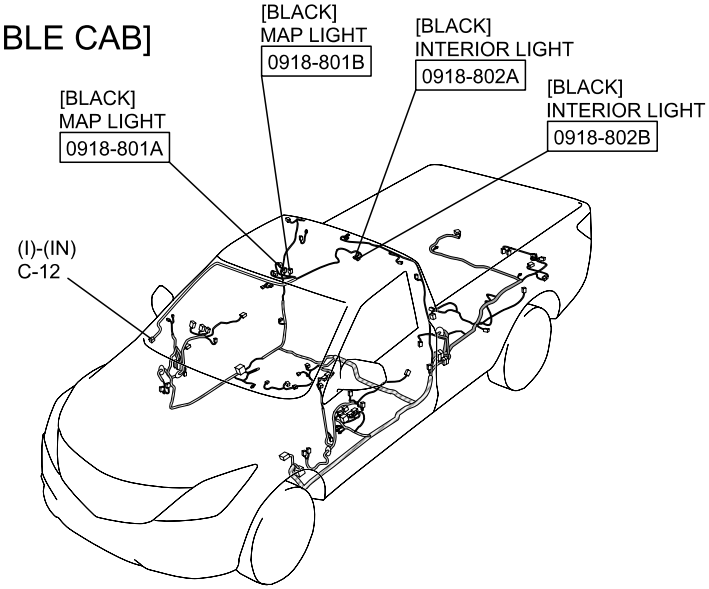

[REGULAR CAB]

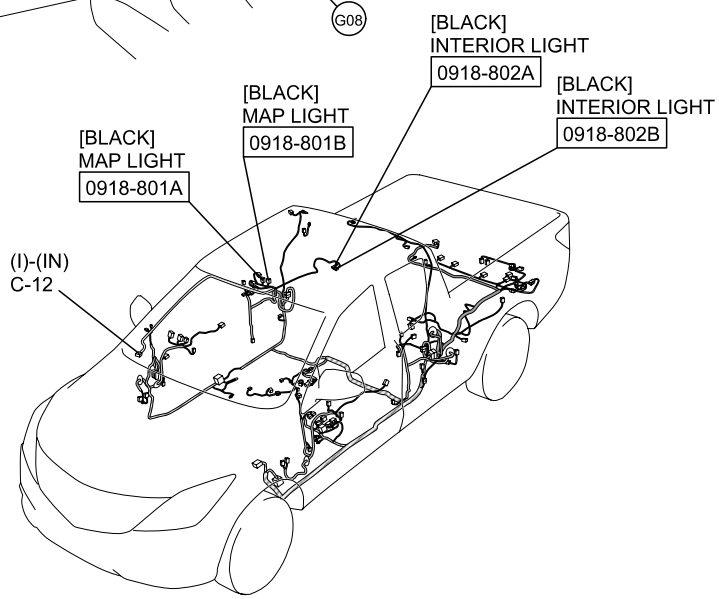

[FREESTYLE CAB]

: REAR HARNESS
: REAR NO.2 HARNESS
REAR NO.3 HARNESS
: DOOR HARNESS
: INTERIOR LIGHT HARNESS
: INSTRUMENT PANEL HARNESS

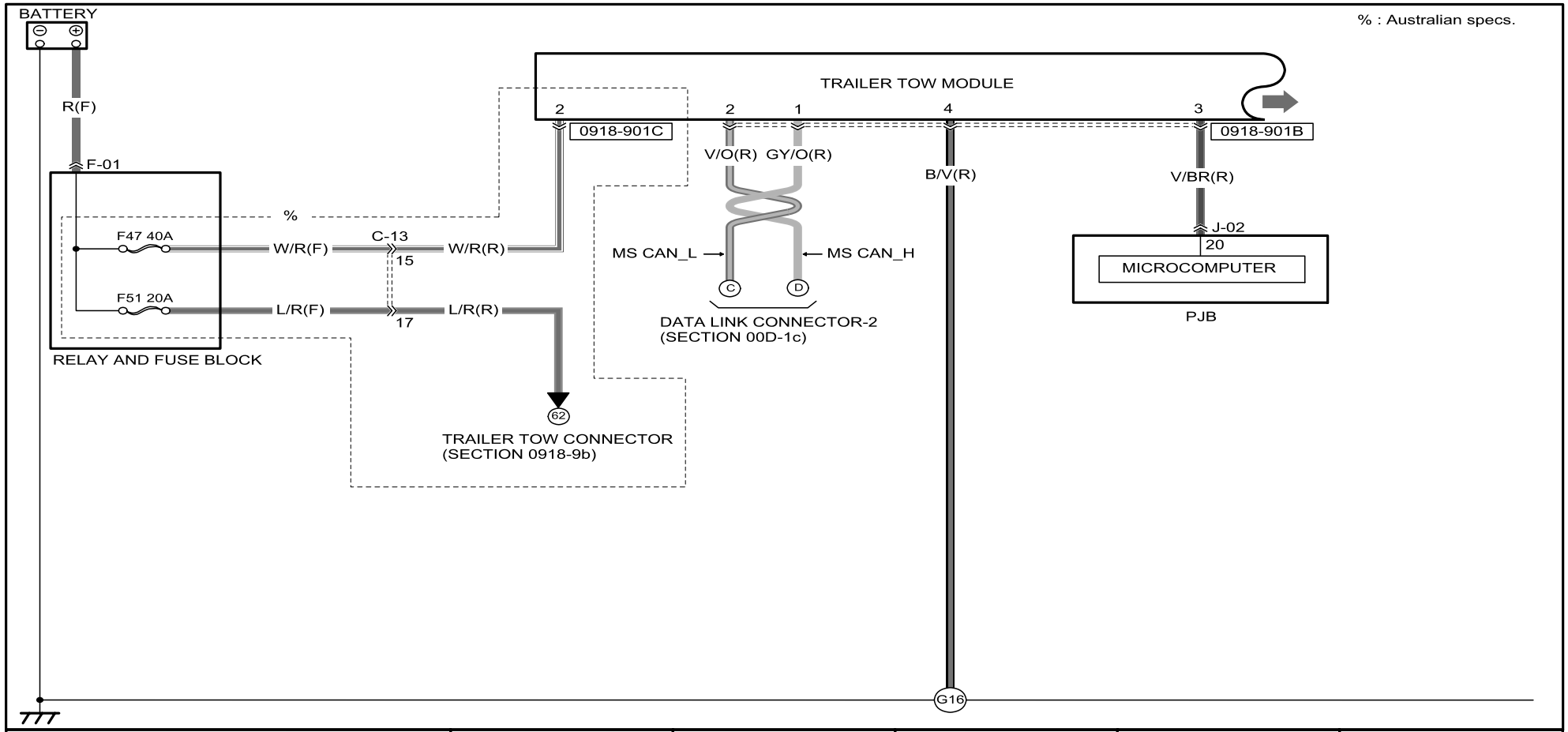

0918-901B
TRAILER TOW MODULE

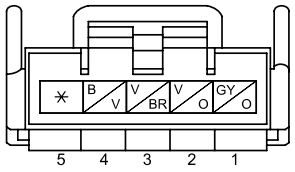

0918-901C
TRAILER TOW MODULE

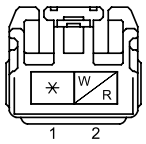

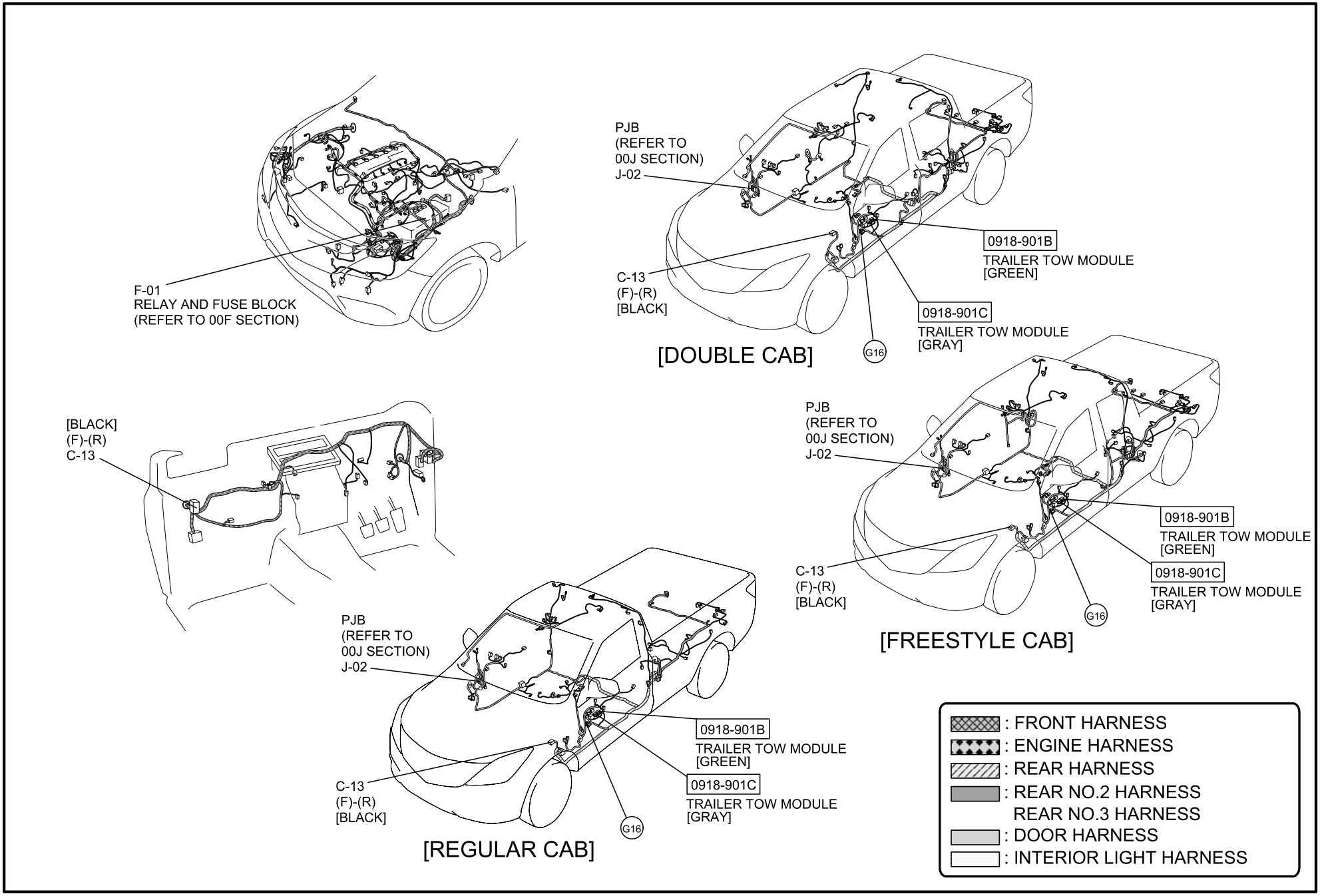
F-01
RELAY AND FUSE BLOCK
(REFER TO 00F SECTION)
PJB
(REFER TO
00J SECTION)
J-02
C-13
(F)-(R)
[BLACK]
0918-901B
TRAILER TOW MODULE
[GREEN]
0918-901C
TRAILER TOW MODULE
[GRAY]
G16
[DOUBLE CAB]
[BLACK]
(F)-(R)
C-13
PJB
(REFER TO
00J SECTION)
J-02
0918-901B
TRAILER TOW MODULE
[GREEN]
0918-901C
TRAILER TOW MODULE
[GRAY]
C-13
(F)-(R)
[BLACK]
G16
[FREESTYLE CAB]
PJB
(REFER TO
00J SECTION)
J-02
0918-901B
TRAILER TOW MODULE
[GREEN]
0918-901C
TRAILER TOW MODULE
[GRAY]
C-13
(F)-(R)
[BLACK]
G16
[REGULAR CAB]
: FRONT HARNESS
: ENGINE HARNESS
: REAR HARNESS
: REAR NO.2 HARNESS
REAR NO.3 HARNESS
: DOOR HARNESS
: INTERIOR LIGHT HARNESS

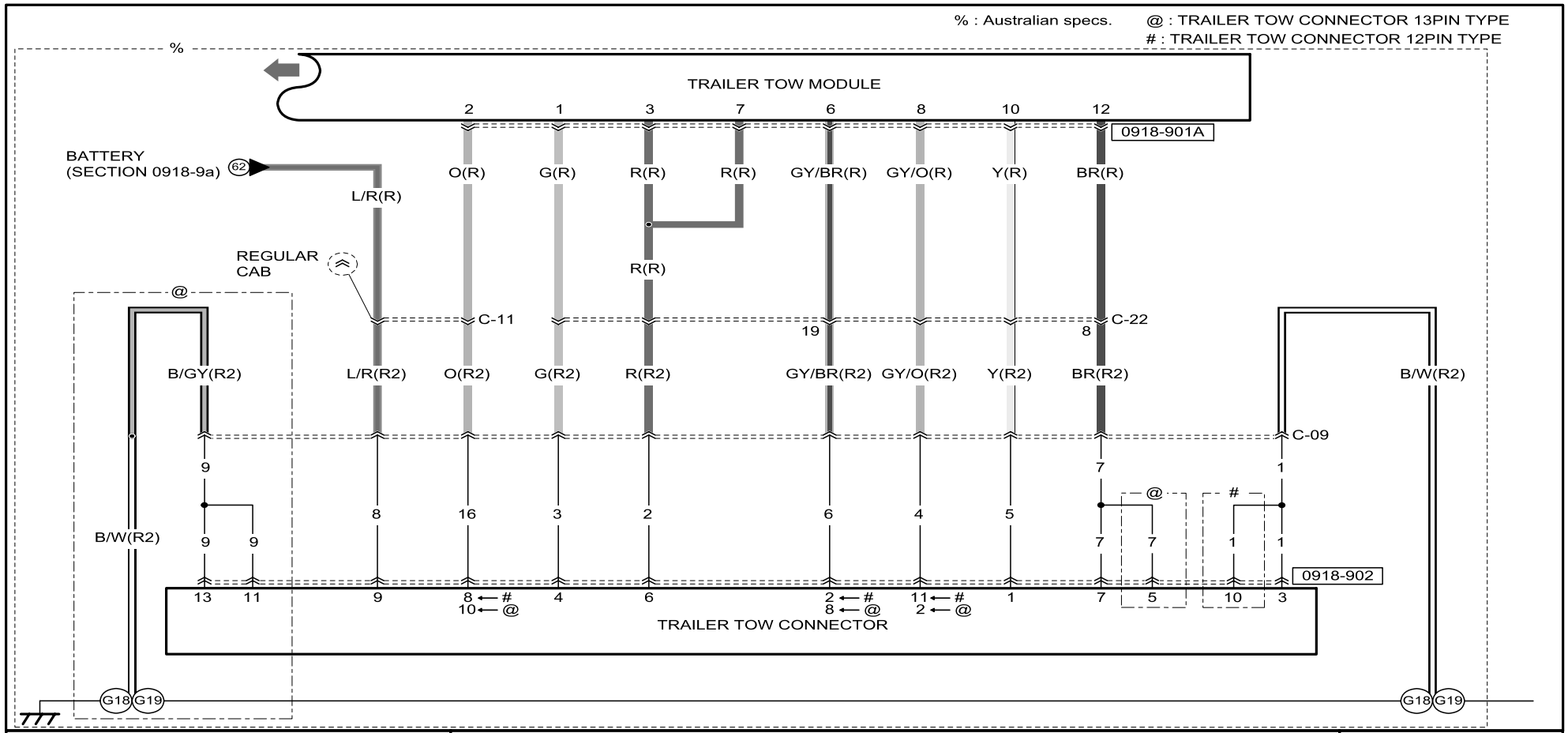

0918-901A
TRAILER TOW MODULE

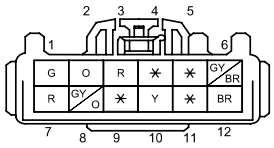

0918-902
TRAILER TOW CONNECTOR

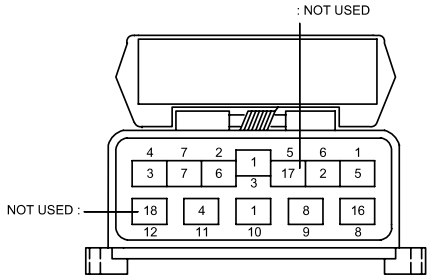

(12PIN TYPE)
WIRE COLORS ARE INDICATED BY NUMBERS.

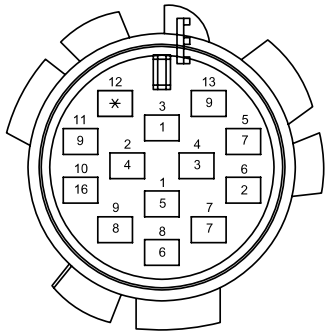

(13PIN TYPE)
WIRE COLORS ARE INDICATED BY NUMBERS.

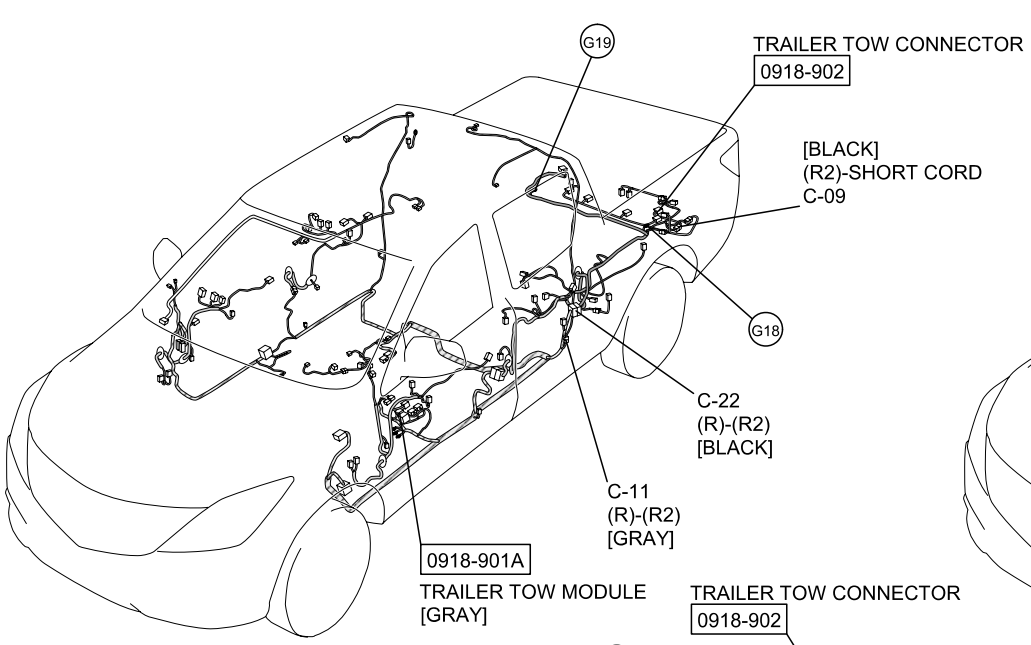

[DOUBLE CAB]

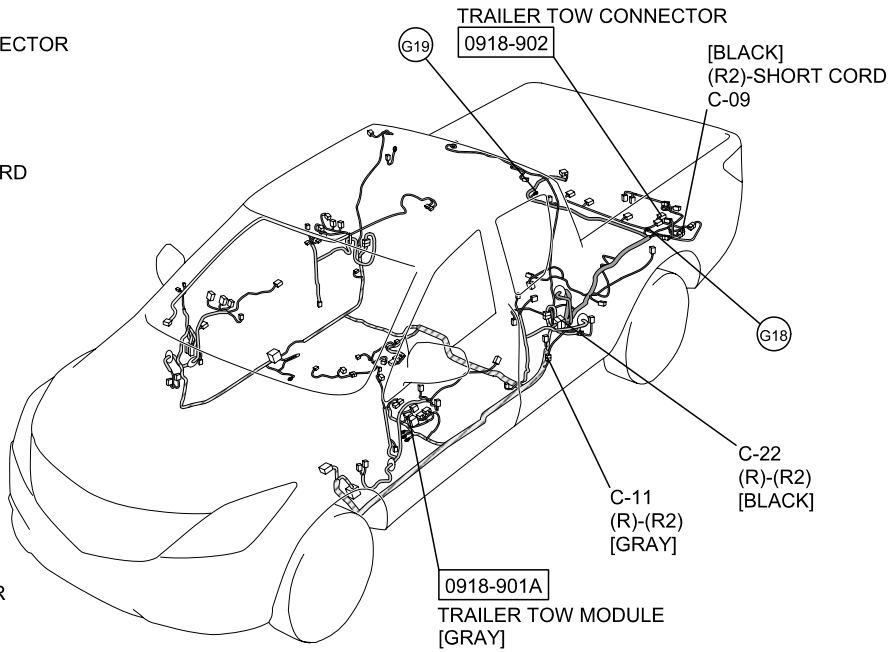

[FREESTYLE CAB]

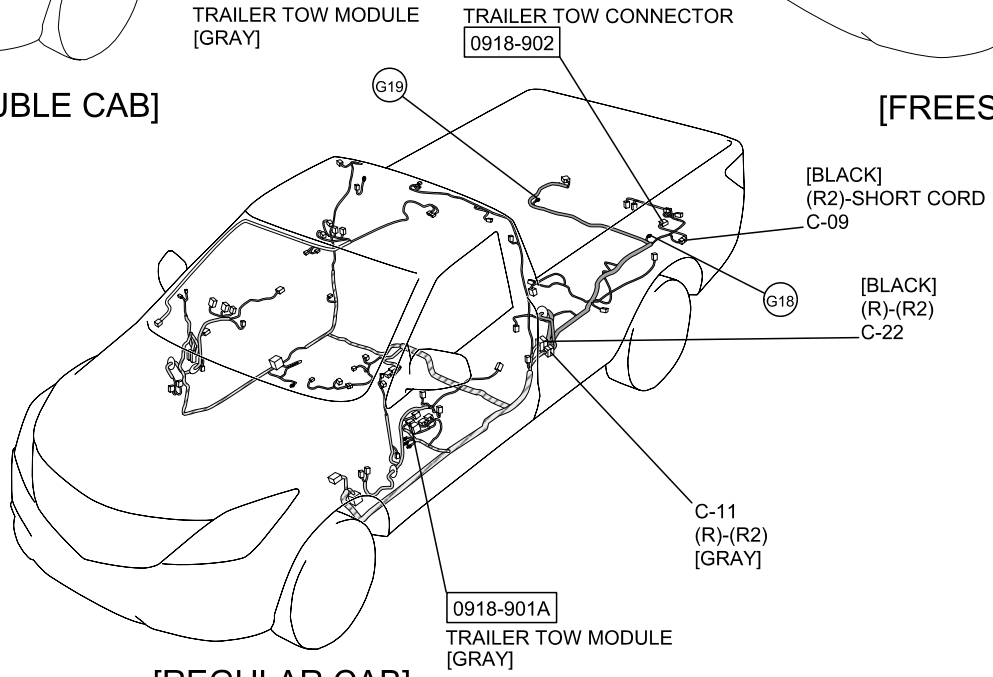

[REGULAR CAB]

: REAR HARNESS
: REAR NO.2 HARNESS
REAR NO.3 HARNESS
: DOOR HARNESS
: INTERIOR LIGHT HARNESS

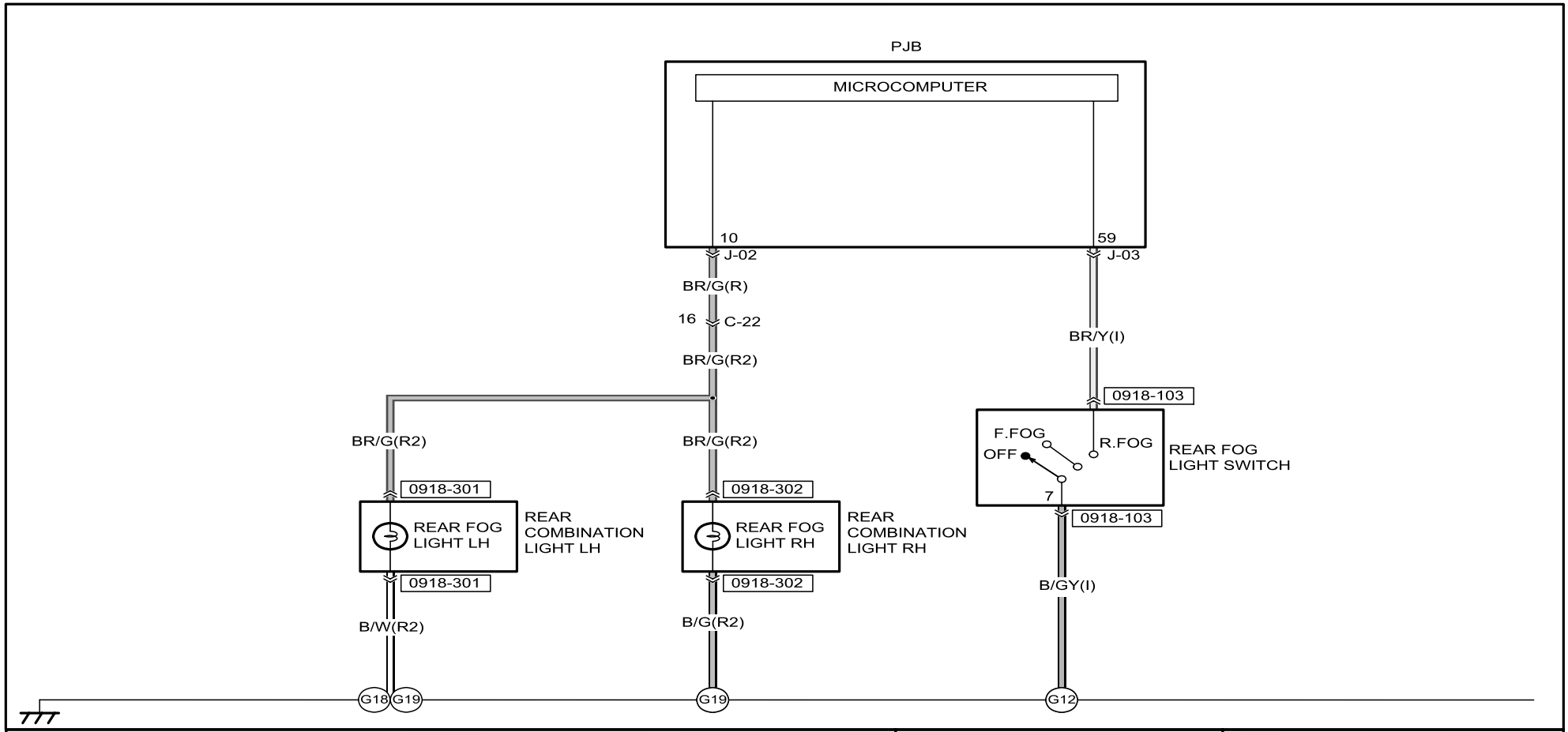

0918-103
LIGHT SWITCH /
FRONT FOG LIGHT SWITCH /
TURN SWITCH /
REAR FOG LIGHT SWITCH

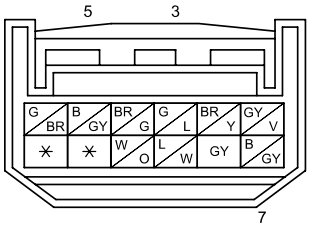

(WITH REAR FOG LIGHT)

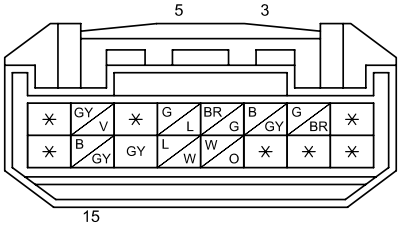

(WITHOUT REAR FOG LIGHT)

0918-301
REAR COMBINATION LIGHT LH

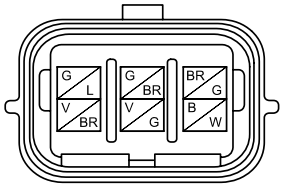

0918-302
REAR COMBINATION LIGHT RH

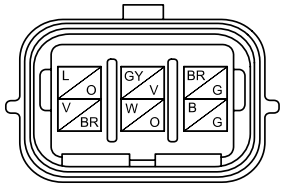

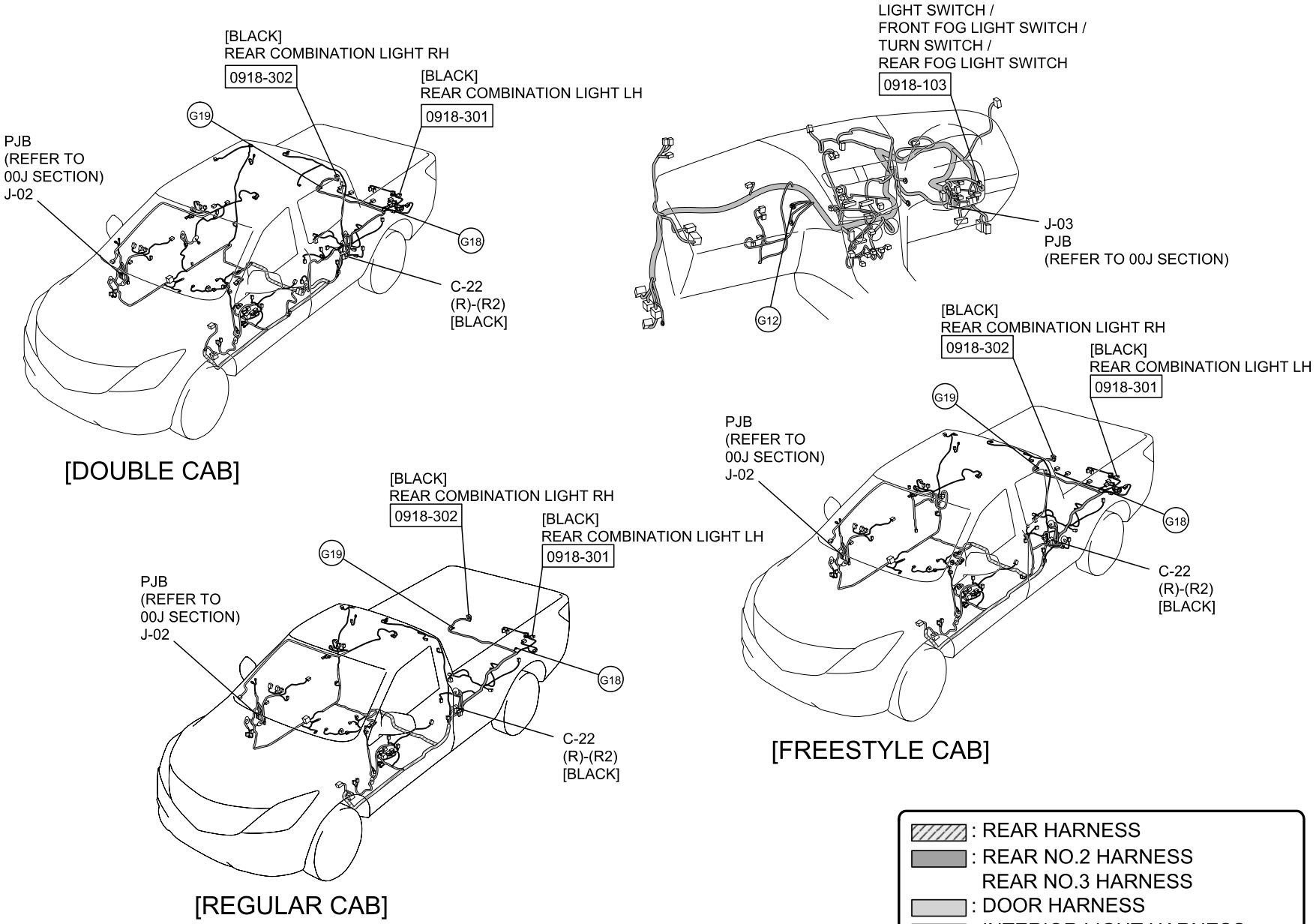
[BLACK]
REAR COMBINATION LIGHT RH
0918-302
[BLACK]
REAR COMBINATION LIGHT LH
0918-301
G19
PJB
(REFER TO
00J SECTION)
J-02
G18
C-22
(R)-(R2)
[BLACK]
[DOUBLE CAB]
LIGHT SWITCH /
FRONT FOG LIGHT SWITCH /
TURN SWITCH /
REAR FOG LIGHT SWITCH
0918-103
J-03
PJB
(REFER TO 00J SECTION)
G12
[BLACK]
REAR COMBINATION LIGHT RH
0918-302
[BLACK]
REAR COMBINATION LIGHT LH
0918-301
G19
PJB
(REFER TO
00J SECTION)
J-02
G18
C-22
(R)-(R2)
[BLACK]
[FREESTYLE CAB]
[BLACK]
REAR COMBINATION LIGHT RH
0918-302
[BLACK]
REAR COMBINATION LIGHT LH
0918-301
G19
PJB
(REFER TO
00J SECTION)
J-02
G18
C-22
(R)-(R2)
[BLACK]
[REGULAR CAB]
: REAR HARNESS
: REAR NO.2 HARNESS
REAR NO.3 HARNESS
: DOOR HARNESS
: INTERIOR LIGHT HARNESS
: INSTRUMENT PANEL HARNESS

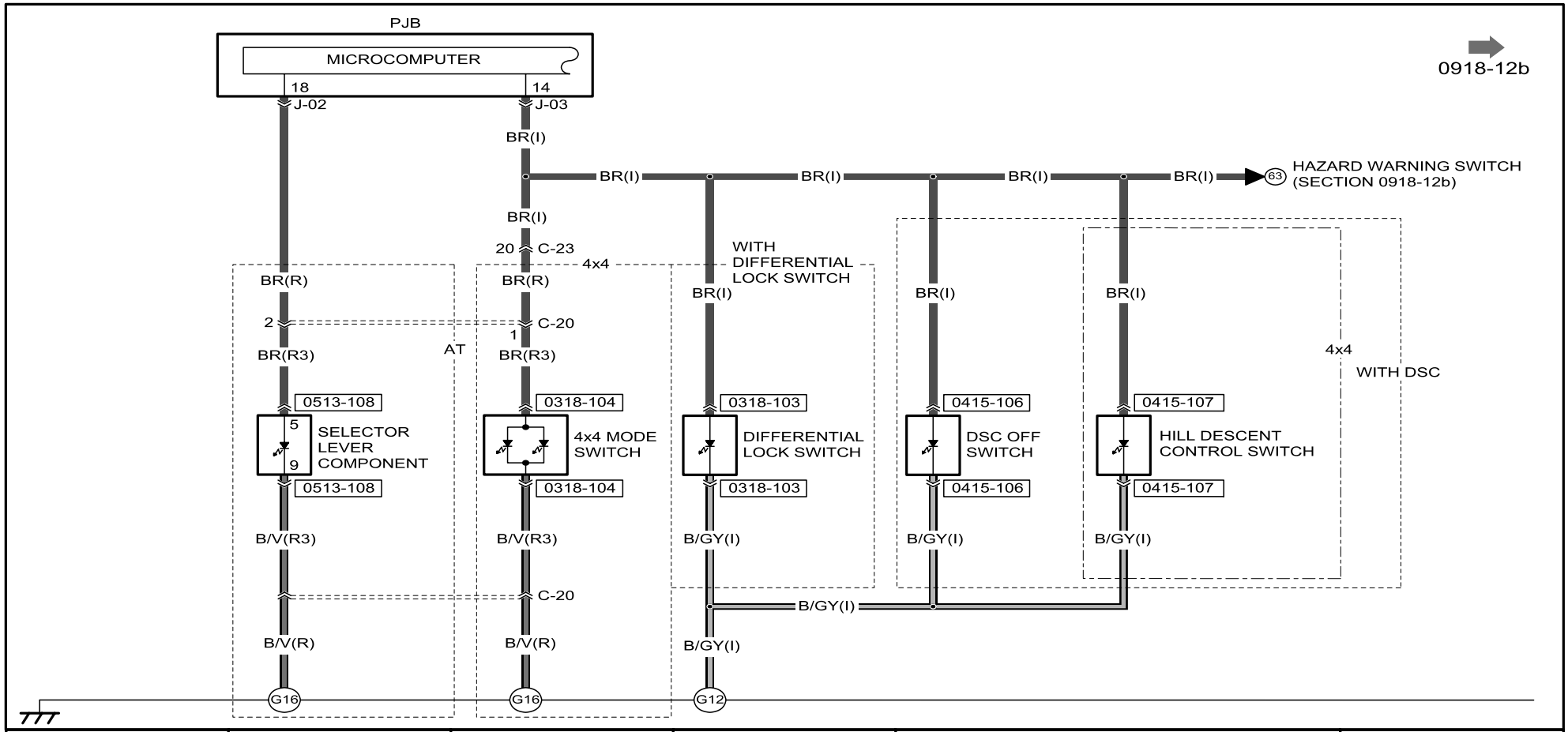

0318-103
DIFFERENTIAL LOCK SWITCH

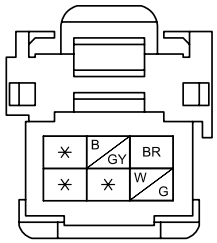

0318-104
4x4 MODE SWITCH

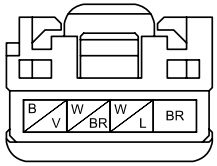

0415-106
DSC OFF SWITCH

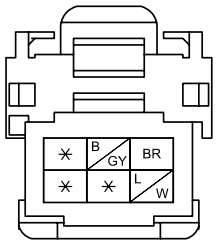

0415-107
HILL DESCENT
CONTROL SWITCH

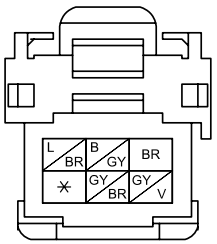

0513-108
SELECTOR LEVER COMPONENT

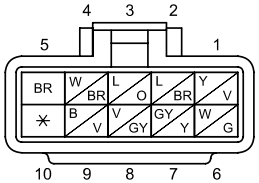

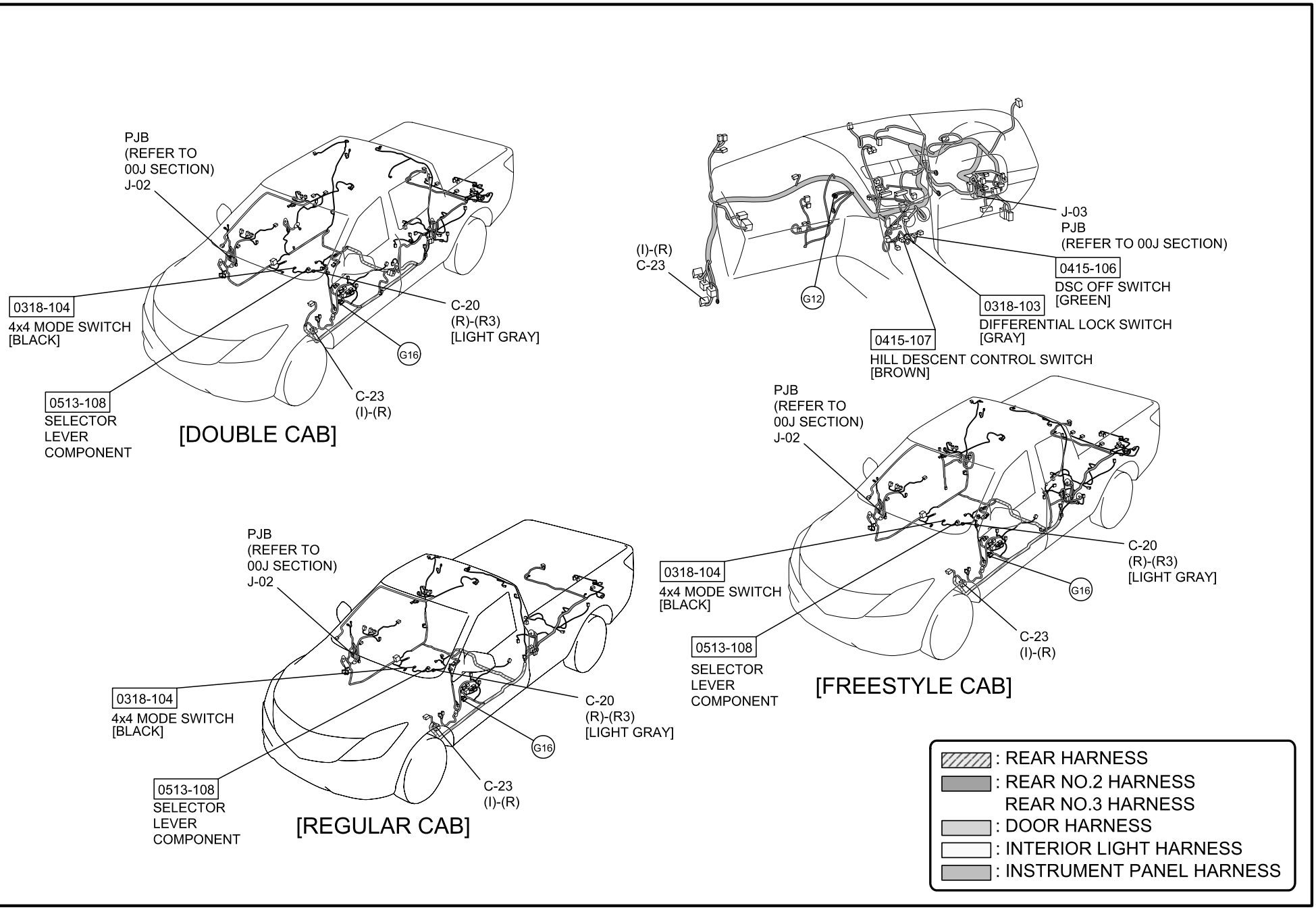
PJB
(REFER TO
00J SECTION)
J-02
0318-104
4x4 MODE SWITCH
[BLACK]
0513-108
SELECTOR
LEVER
COMPONENT
C-20
(R)-(R3)
[LIGHT GRAY]
G16
C-23
(I)-(R)
[DOUBLE CAB]
(I)-(R)
C-23
G12
J-03
PJB
(REFER TO 00J SECTION)
0415-106
DSC OFF SWITCH
[GREEN]
0318-103
DIFFERENTIAL LOCK SWITCH
[GRAY]
0415-107
HILL DESCENT CONTROL SWITCH
[BROWN]
PJB
(REFER TO
00J SECTION)
J-02
0318-104
4x4 MODE SWITCH
[BLACK]
0513-108
SELECTOR
LEVER
COMPONENT
C-20
(R)-(R3)
[LIGHT GRAY]
G16
C-23
(I)-(R)
[FREESTYLE CAB]
PJB
(REFER TO
00J SECTION)
J-02
0318-104
4x4 MODE SWITCH
[BLACK]
0513-108
SELECTOR
LEVER
COMPONENT
C-20
(R)-(R3)
[LIGHT GRAY]
G16
C-23
(I)-(R)
[REGULAR CAB]
: REAR HARNESS
: REAR NO.2 HARNESS
REAR NO.3 HARNESS
: DOOR HARNESS
: INTERIOR LIGHT HARNESS
: INSTRUMENT PANEL HARNESS

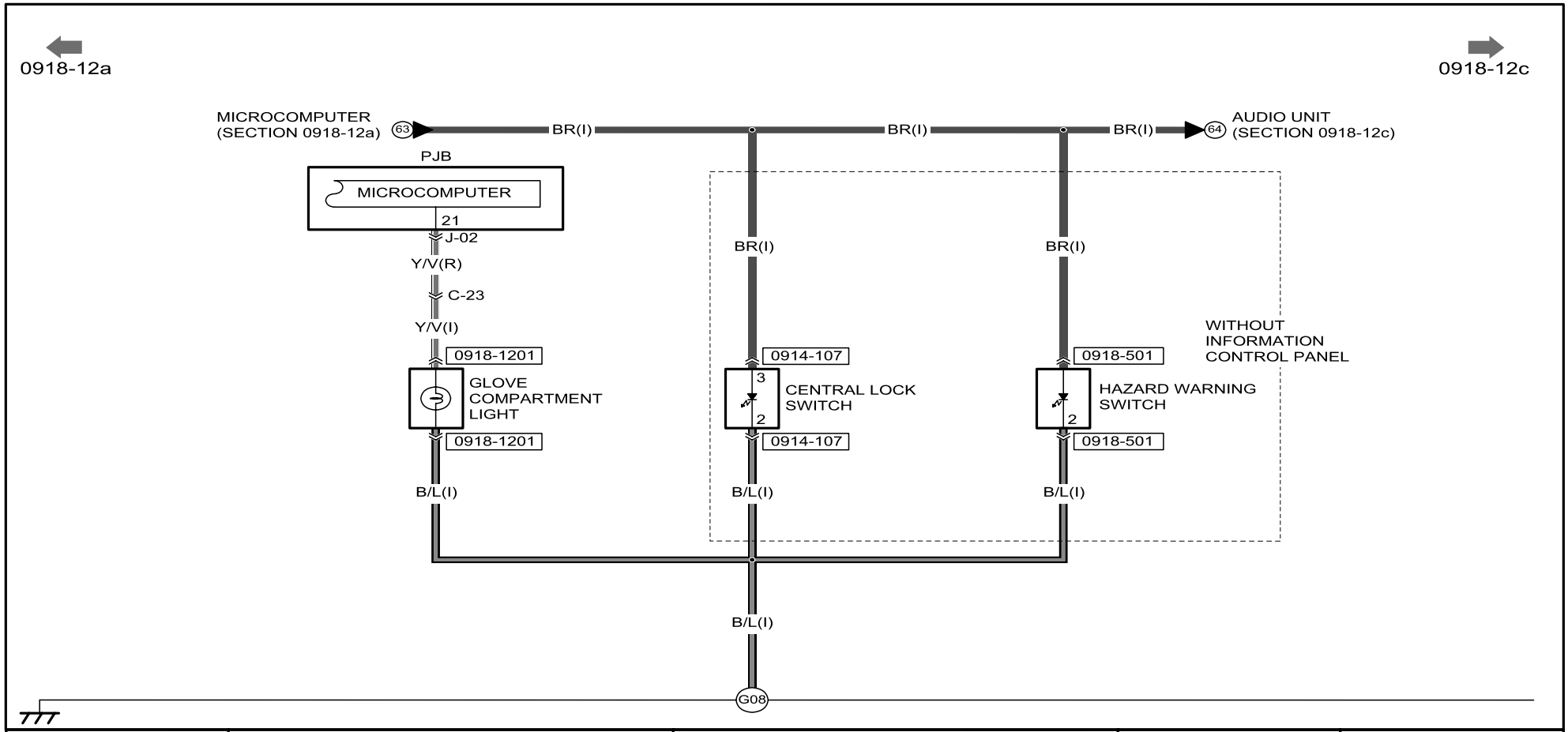

0914-107
CENTRAL LOCK SWITCH

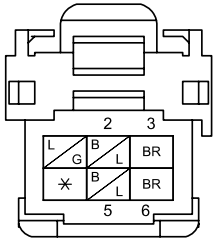

0918-501
HAZARD WARNING SWITCH

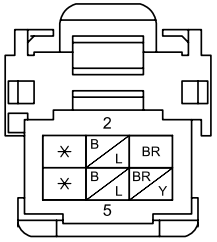

0918-1201
GLOVE COMPARTMENT LIGHT

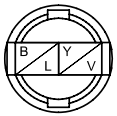

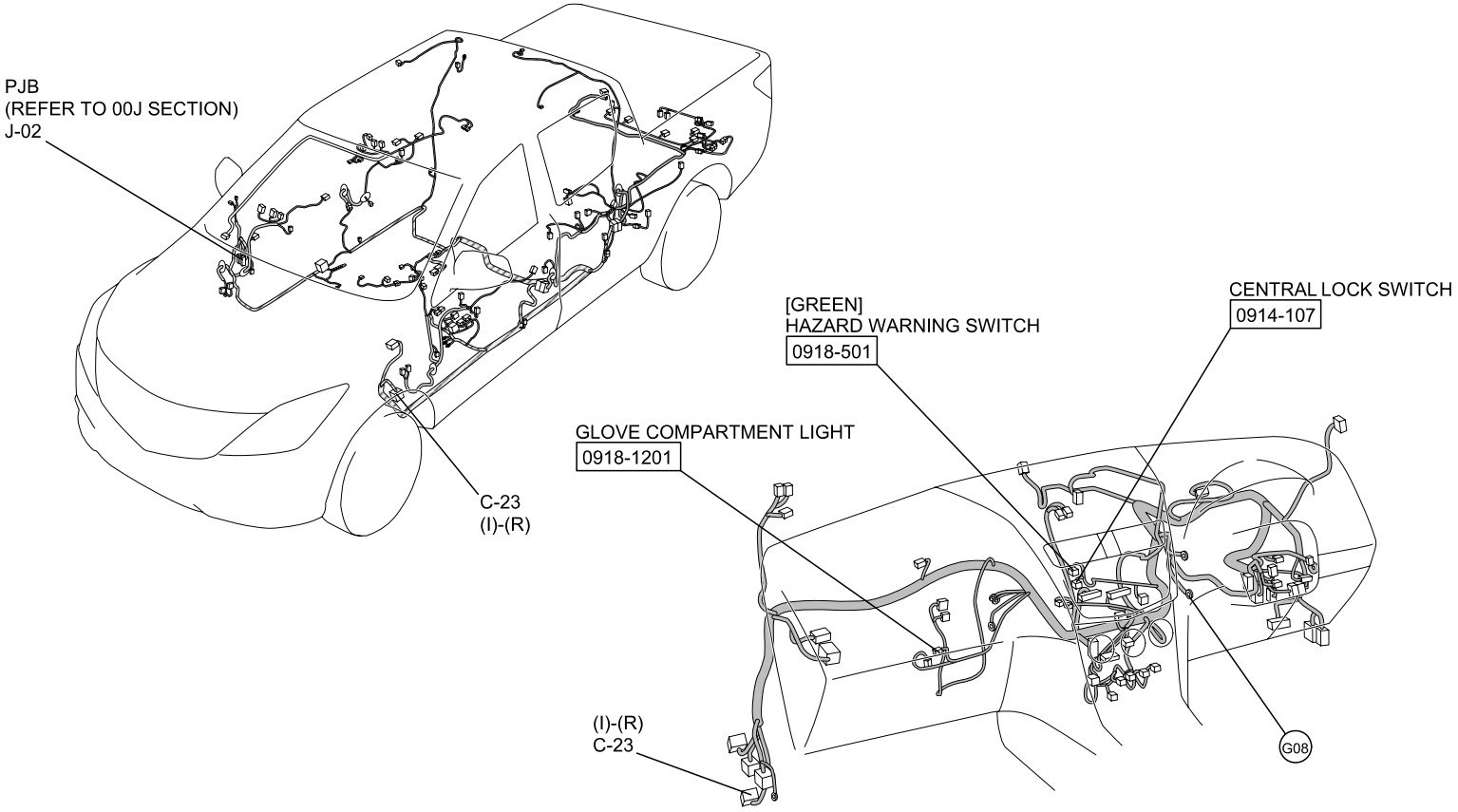

: REAR HARNESS
: REAR NO.2 HARNESS
REAR NO.3 HARNESS
: DOOR HARNESS
: INTERIOR LIGHT HARNESS
: INSTRUMENT PANEL HARNESS

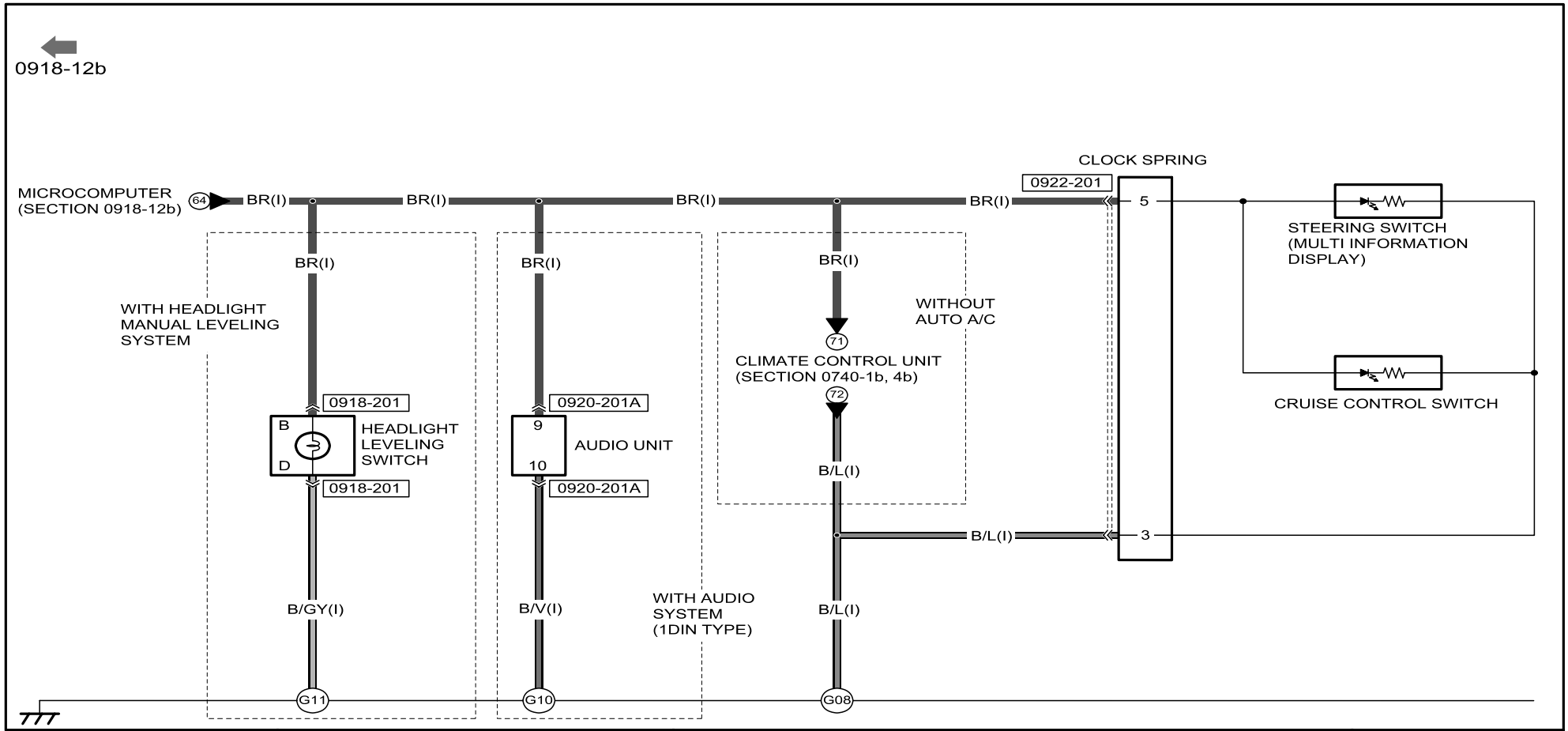

0918-201
HEADLIGHT LEVELING SWITCH

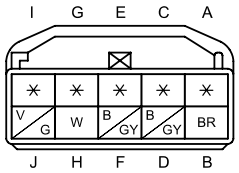

0920-201A
AUDIO UNIT

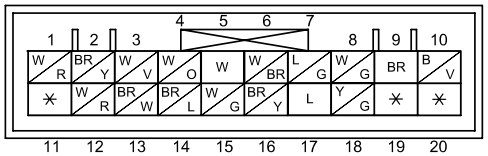

0922-201
INSTRUMENT PANEL HARNESS-CLOCK SPRING

INSTRUMENT PANEL HARNESS

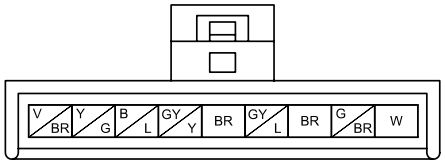

CLOCK SPRING

WIRE COLORS ARE INDICATED BY NUMBERS.

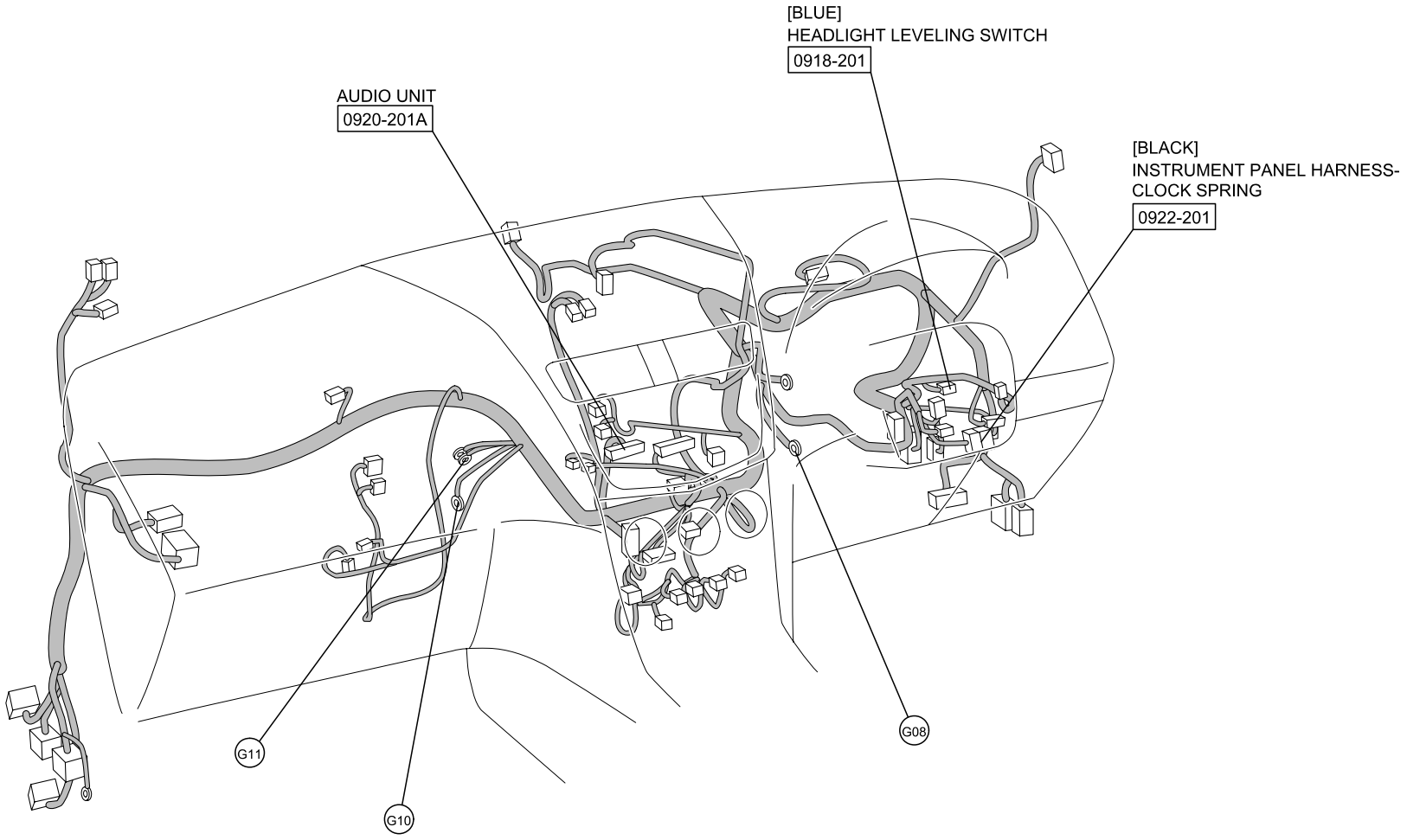

: INSTRUMENT PANEL HARNESS

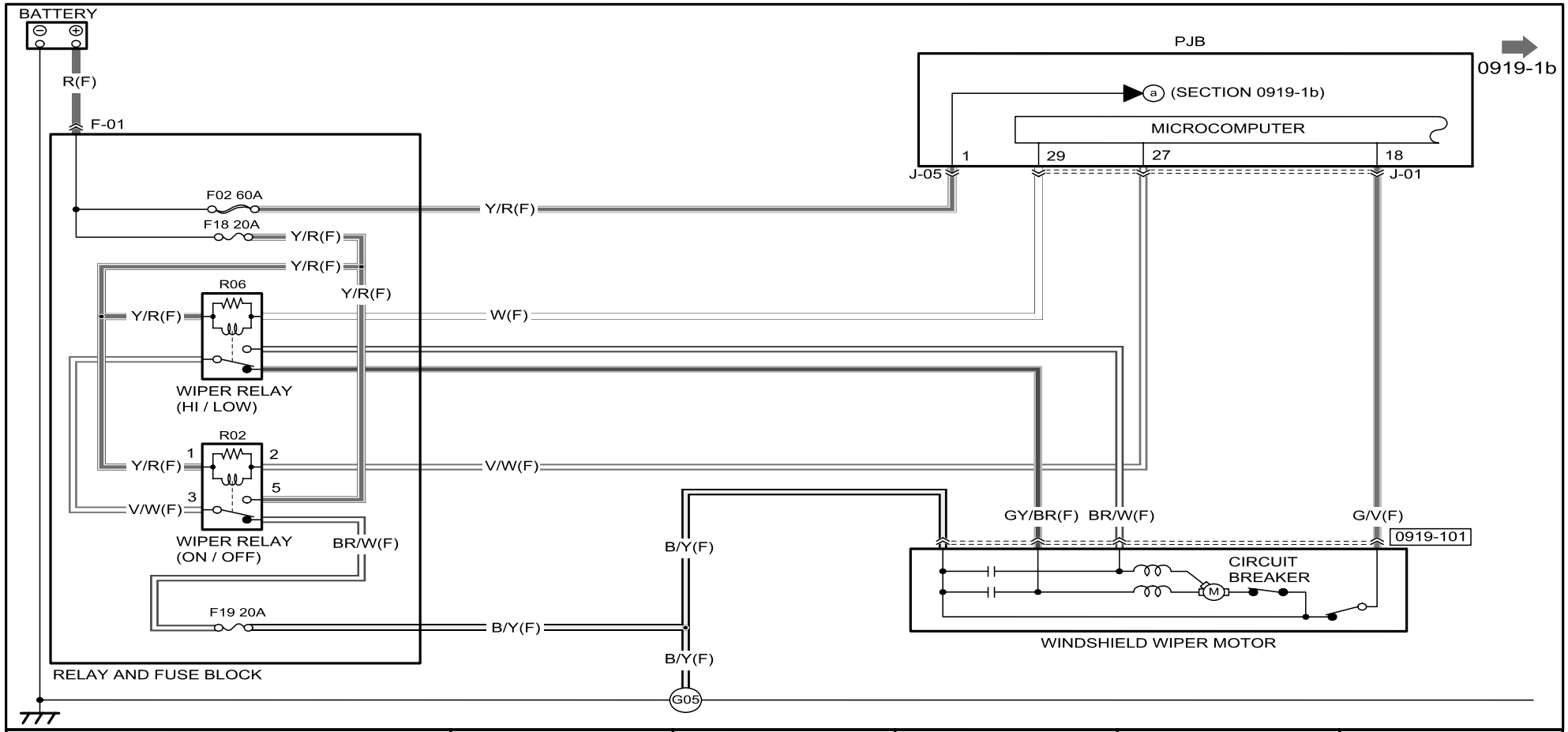

0919-101
WINDSHIELD WIPER MOTOR

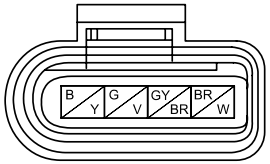

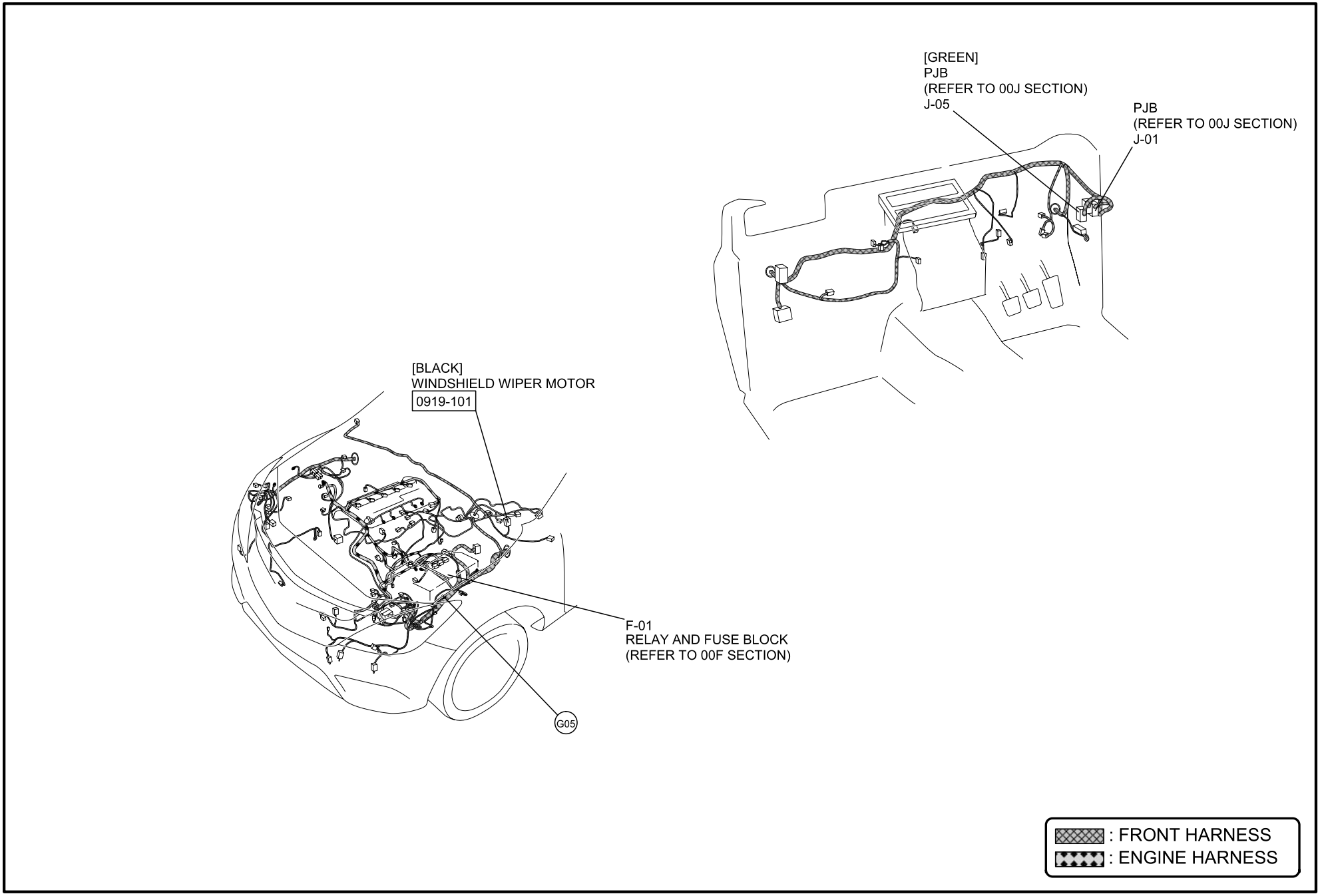
[GREEN]
PJB
(REFER TO 00J SECTION)
J-05
PJB
(REFER TO 00J SECTION)
J-01
[BLACK]
WINDSHIELD WIPER MOTOR
0919-101
F-01
RELAY AND FUSE BLOCK
(REFER TO 00F SECTION)
G05
: FRONT HARNESS
: ENGINE HARNESS

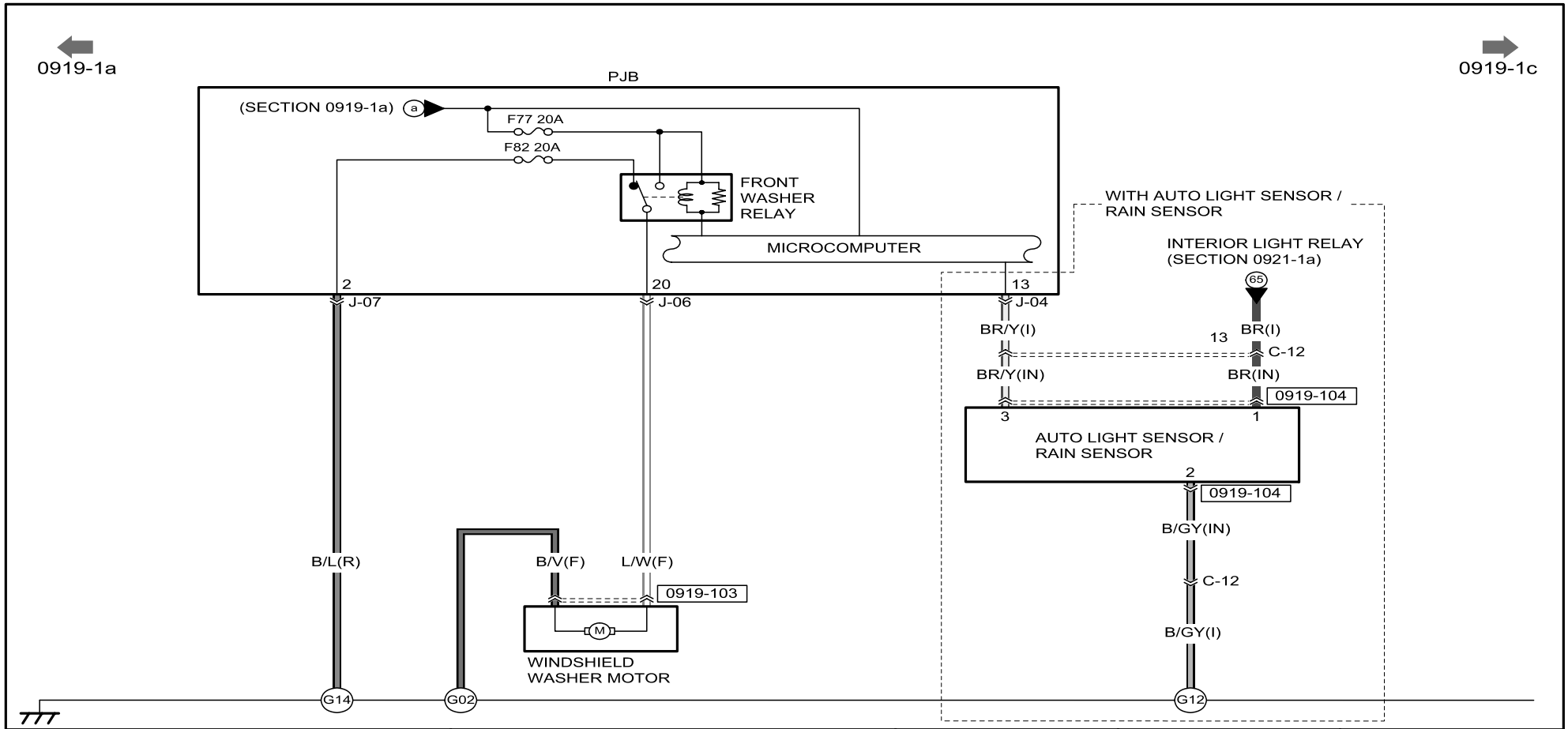

0919-103
WINDSHIELD WASHER MOTOR

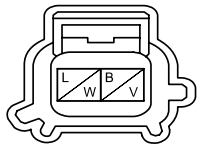

0919-104
AUTO LIGHT SENSOR / RAIN SENSOR

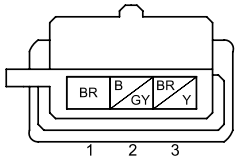

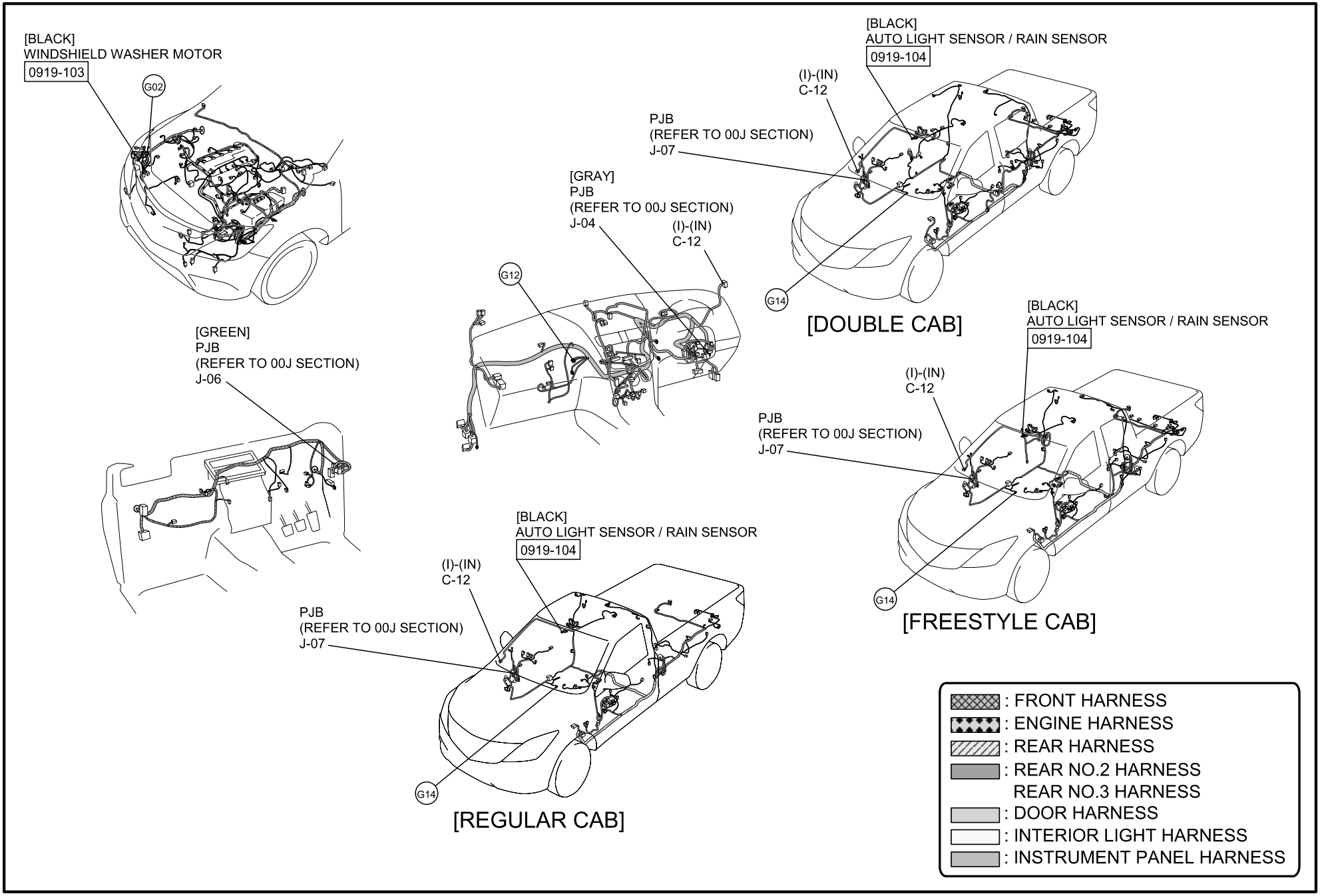
[BLACK]
WINDSHIELD WASHER MOTOR
0919-103
G02
[BLACK]
AUTO LIGHT SENSOR / RAIN SENSOR
0919-104
(I)-(IN)
C-12
PJB
(REFER TO 00J SECTION)
J-07
G14
[DOUBLE CAB]
[GRAY]
PJB
(REFER TO 00J SECTION)
J-04
(I)-(IN)
C-12
G12
[GREEN]
PJB
(REFER TO 00J SECTION)
J-06
[BLACK]
AUTO LIGHT SENSOR / RAIN SENSOR
0919-104
(I)-(IN)
C-12
PJB
(REFER TO 00J SECTION)
J-07
G14
[FREESTYLE CAB]
[BLACK]
AUTO LIGHT SENSOR / RAIN SENSOR
0919-104
(I)-(IN)
C-12
PJB
(REFER TO 00J SECTION)
J-07
G14
[REGULAR CAB]
: FRONT HARNESS
: ENGINE HARNESS
: REAR HARNESS
: REAR NO.2 HARNESS
REAR NO.3 HARNESS
: DOOR HARNESS
: INTERIOR LIGHT HARNESS
: INSTRUMENT PANEL HARNESS

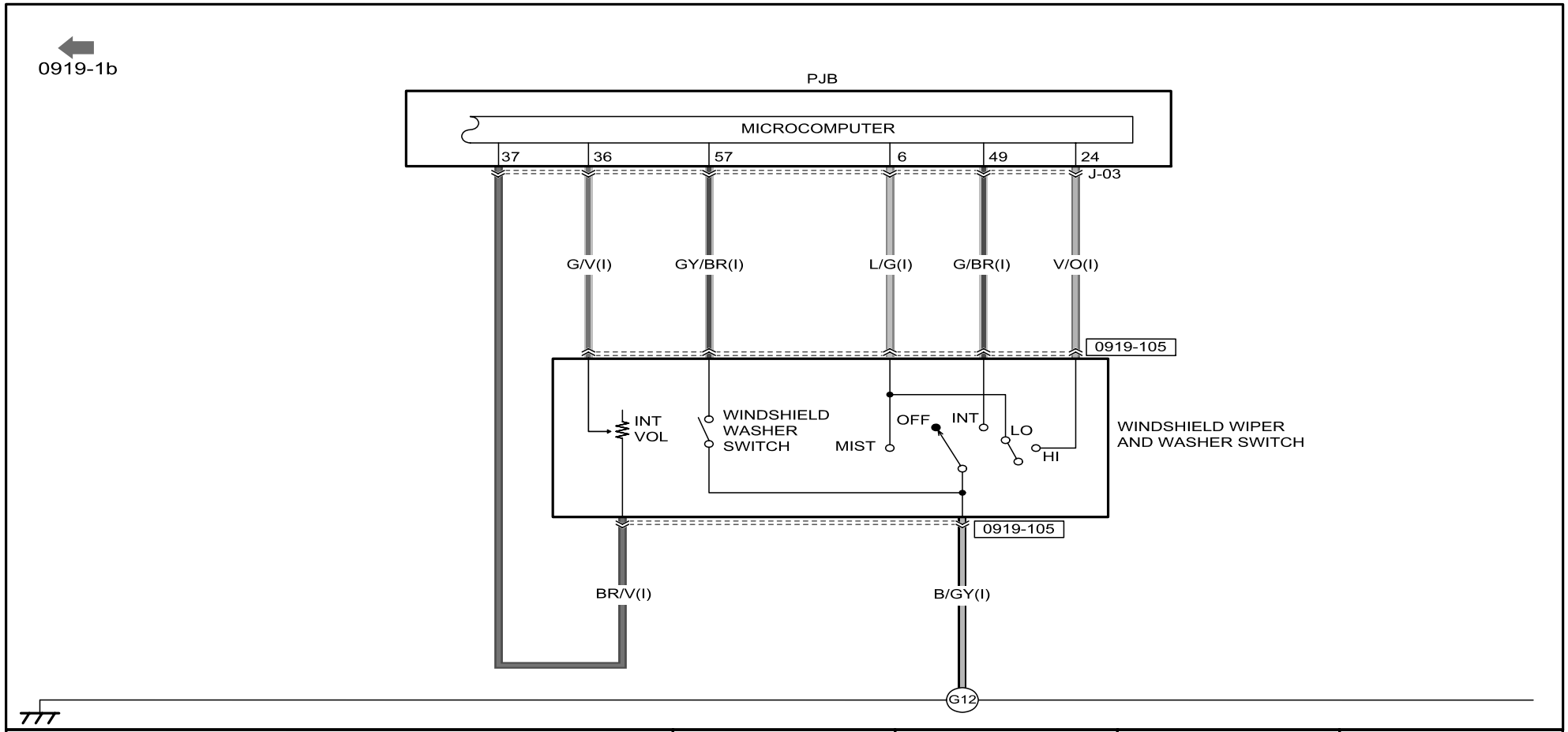

0919-105
WINDSHIELD WIPER AND WASHER SWITCH

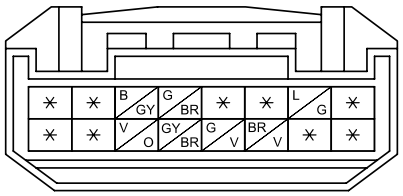

(WITH REAR FOG LIGHT)

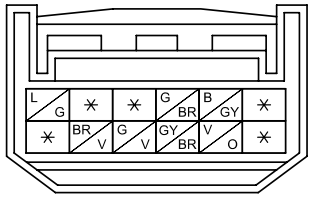

(WITHOUT REAR FOG LIGHT)

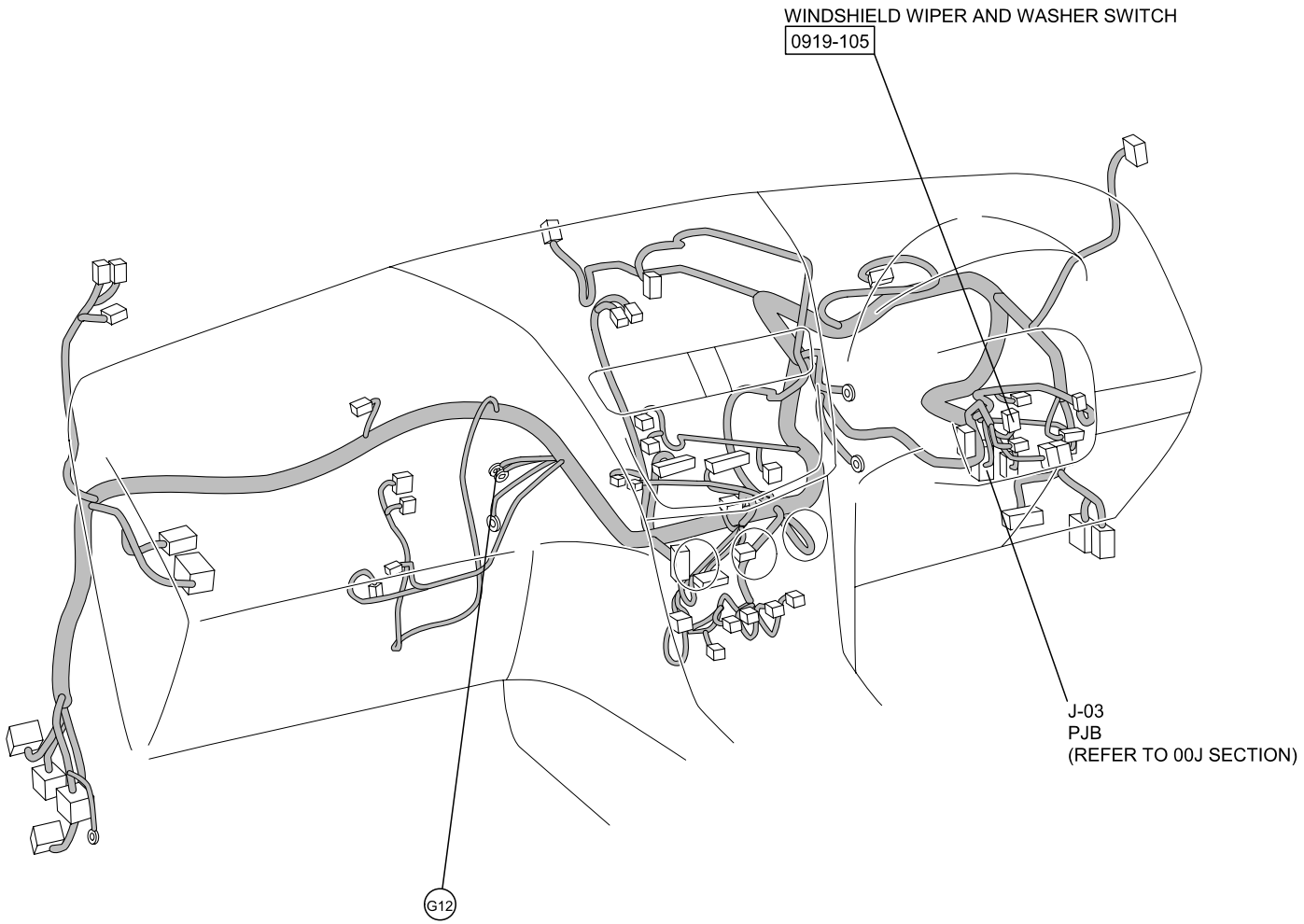

: INSTRUMENT PANEL HARNESS

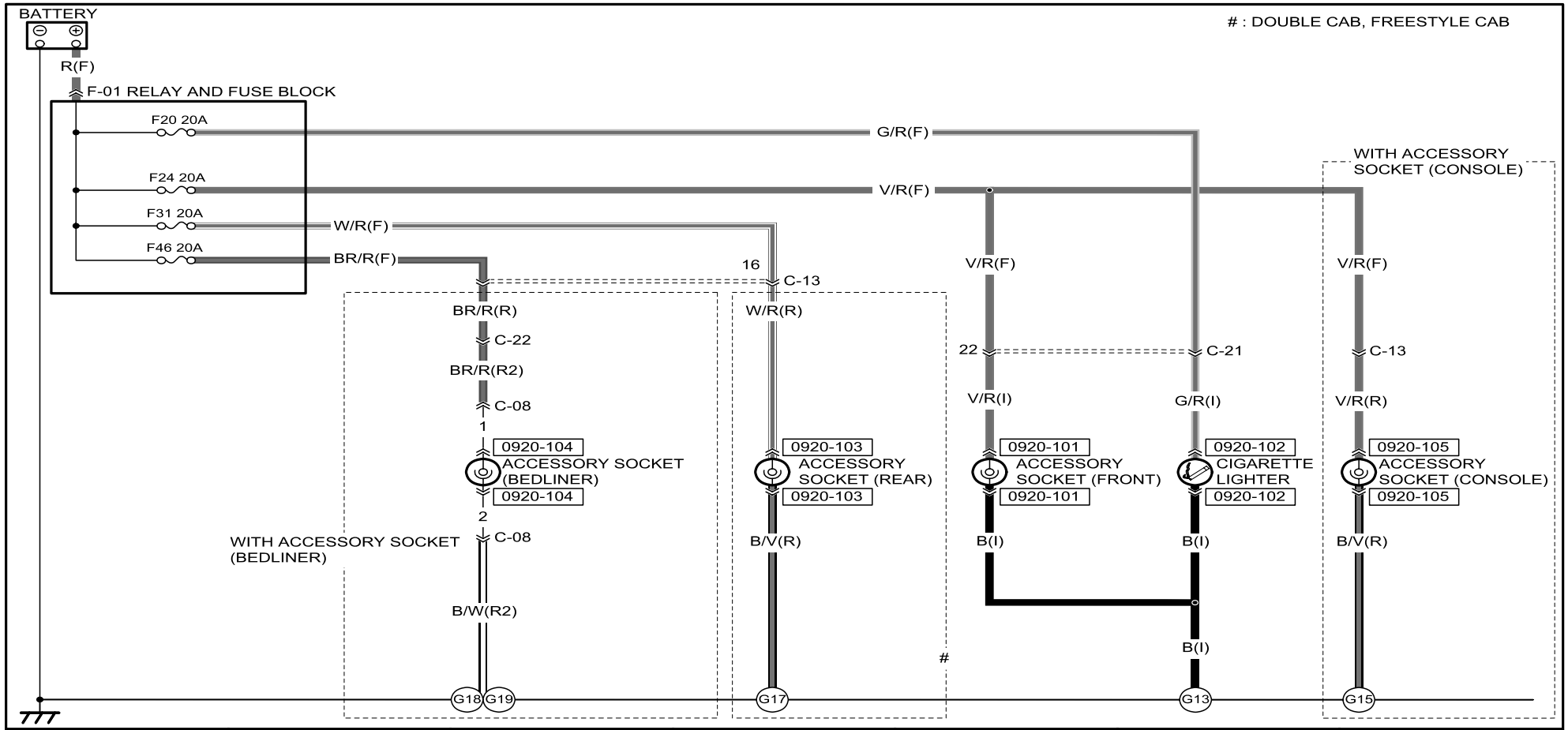

0920-101 ACCESSORY SOCKET (FRONT)	0920-102 CIGARETTE LIGHTER	0920-103 ACCESSORY SOCKET (REAR)	0920-104 ACCESSORY SOCKET (BEDLINER)	0920-105 ACCESSORY SOCKET (CONSOLE)		
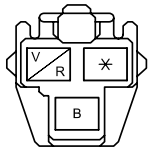	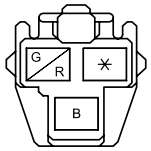	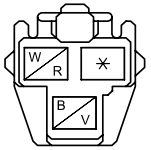	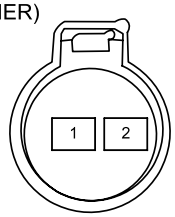	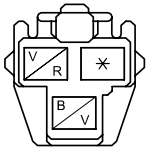		

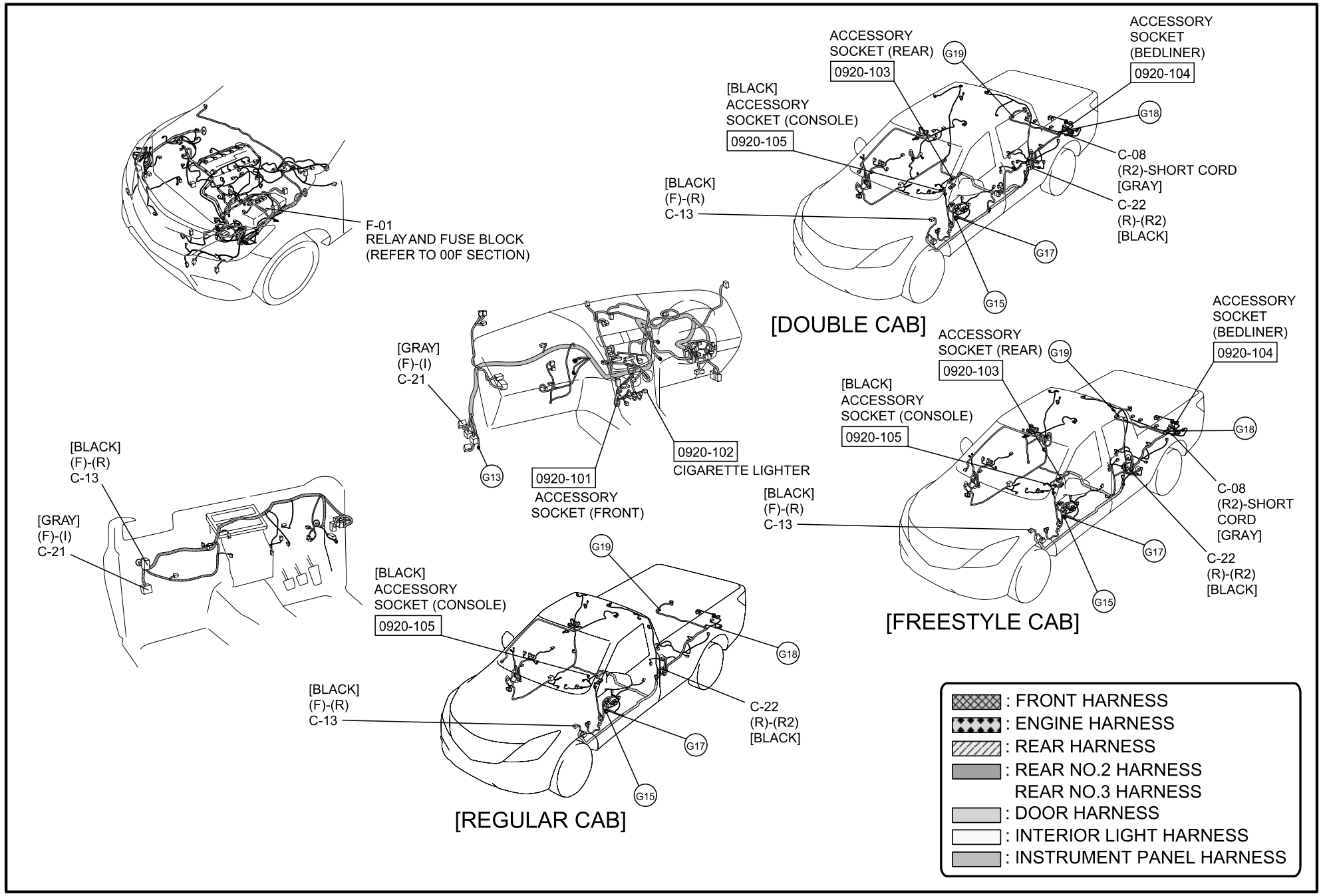
F-01
RELAY AND FUSE BLOCK
(REFER TO 00F SECTION)
ACCESSORY SOCKET (REAR)
0920-103
ACCESSORY SOCKET (BEDLINER)
0920-104
[BLACK]
ACCESSORY SOCKET (CONSOLE)
0920-105
G19
G18
C-08
(R2)-SHORT CORD
[GRAY]
C-22
(R)-(R2)
[BLACK]
[BLACK]
(F)-(R)
C-13
G17
G15
[DOUBLE CAB]
[GRAY]
(F)-(I)
C-21
G13
0920-101
ACCESSORY SOCKET (FRONT)
0920-102
CIGARETTE LIGHTER
[BLACK]
(F)-(R)
C-13
[GRAY]
(F)-(I)
C-21
[BLACK]
ACCESSORY SOCKET (CONSOLE)
0920-105
G19
G18
[BLACK]
(F)-(R)
C-13
G17
G15
C-22
(R)-(R2)
[BLACK]
[REGULAR CAB]
ACCESSORY SOCKET (REAR)
0920-103
ACCESSORY SOCKET (BEDLINER)
0920-104
[BLACK]
ACCESSORY SOCKET (CONSOLE)
0920-105
G19
G18
C-08
(R2)-SHORT CORD
[GRAY]
[BLACK]
(F)-(R)
C-13
G17
C-22
(R)-(R2)
[BLACK]
G15
[FREESTYLE CAB]
: FRONT HARNESS
: ENGINE HARNESS
: REAR HARNESS
: REAR NO.2 HARNESS
REAR NO.3 HARNESS
: DOOR HARNESS
: INTERIOR LIGHT HARNESS
: INSTRUMENT PANEL HARNESS

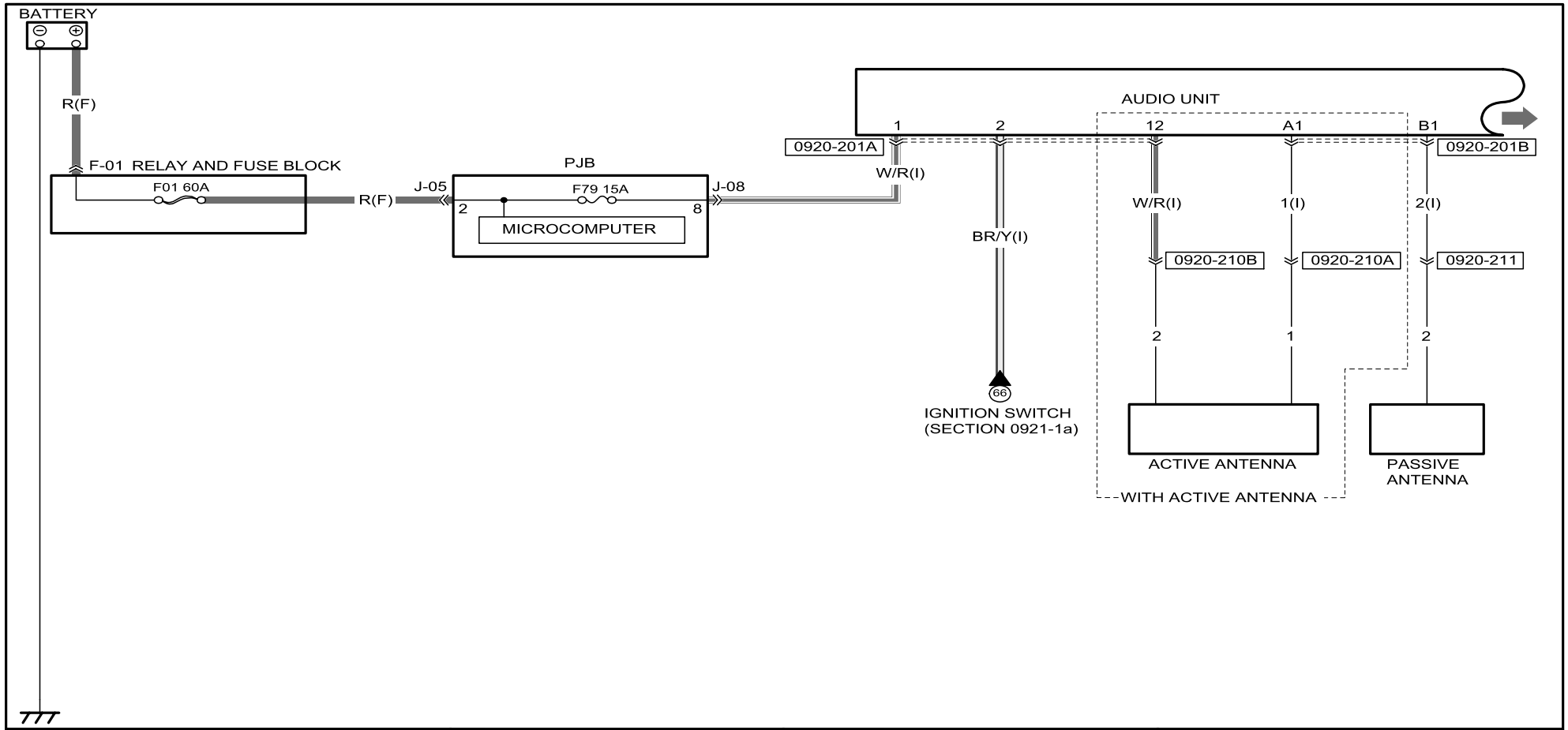

0920-201A
AUDIO UNIT

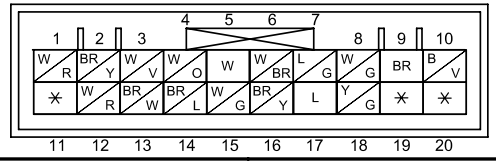

0920-201B
AUDIO UNIT

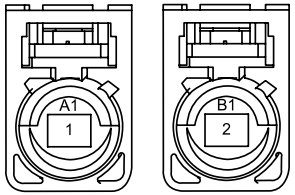

0920-210A
INSTRUMENT PANEL HARNESS-
ACTIVE ANTENNA

INSTRUMENT PANEL HARNESS ACTIVE ANTENNA

WIRE COLORS ARE INDICATED BY NUMBERS.

0920-210B
INSTRUMENT PANEL HARNESS-
ACTIVE ANTENNA

INSTRUMENT PANEL HARNESS ACTIVE ANTENNA

WIRE COLORS ARE INDICATED BY NUMBERS.

0920-211
INSTRUMENT PANEL HARNESS-
PASSIVE ANTENNA

INSTRUMENT PANEL HARNESS PASSIVE ANTENNA

WIRE COLORS ARE INDICATED BY NUMBERS.

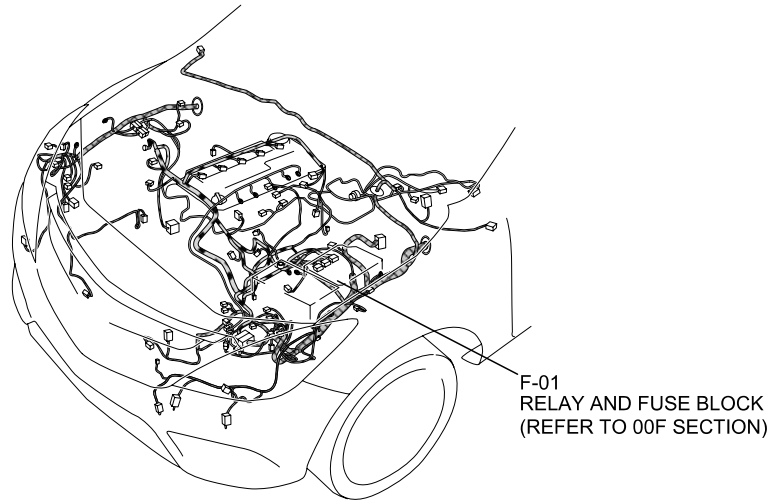

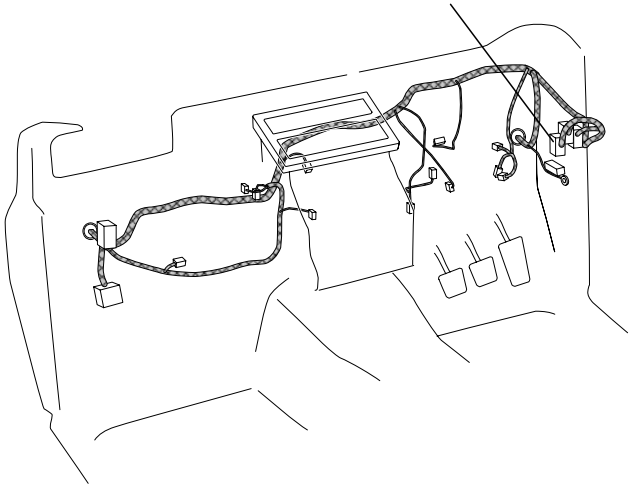

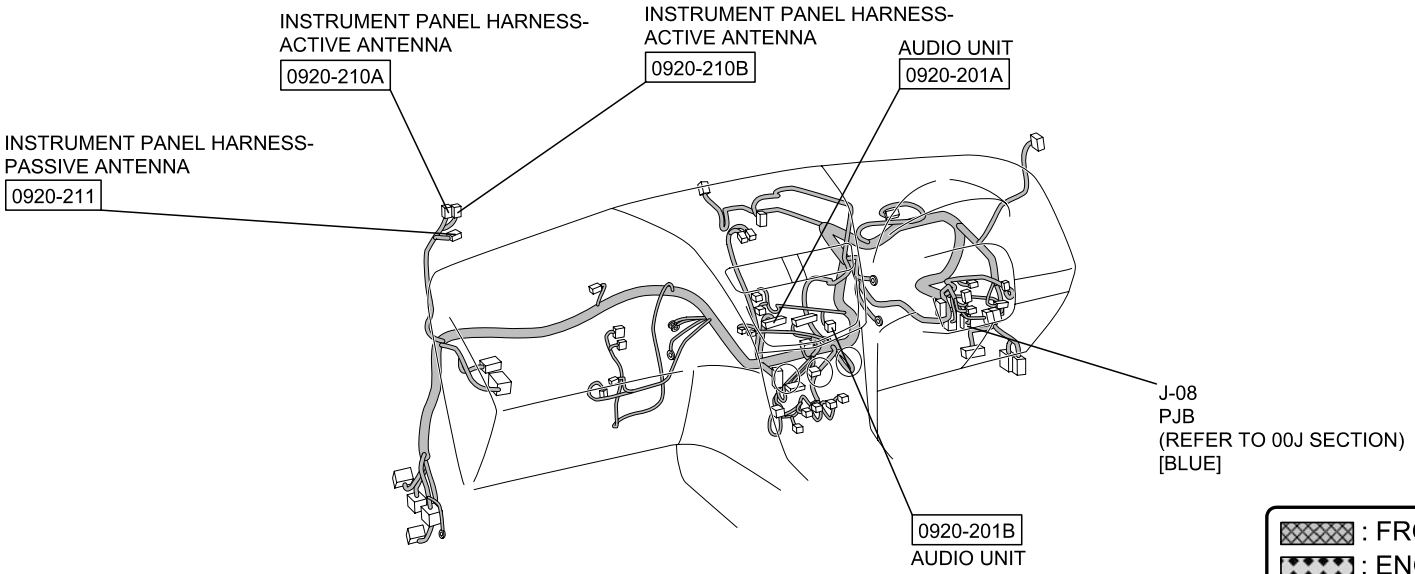

: FRONT HARNESS
: ENGINE HARNESS
: INSTRUMENT PANEL HARNESS

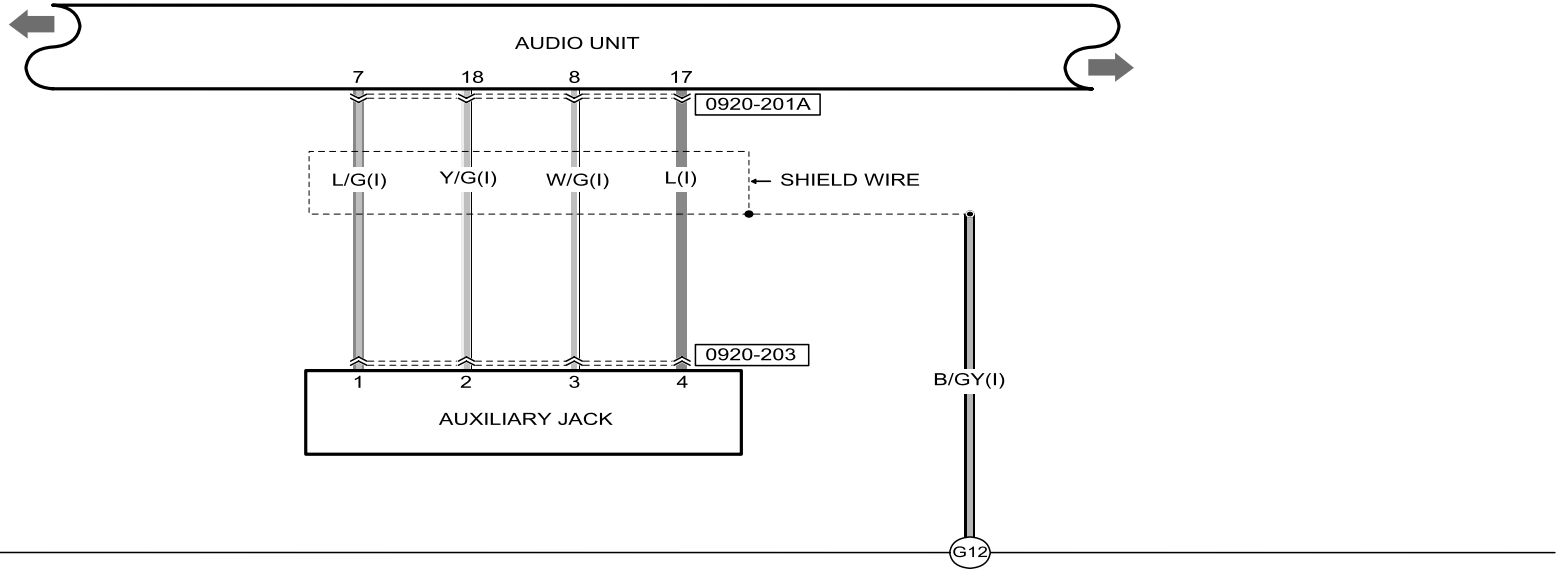

0920-201A
AUDIO UNIT

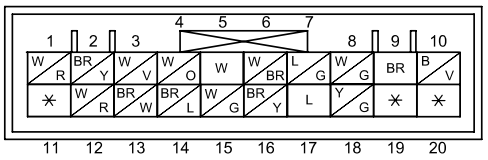

0920-203
AUXILIARY JACK

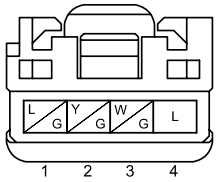

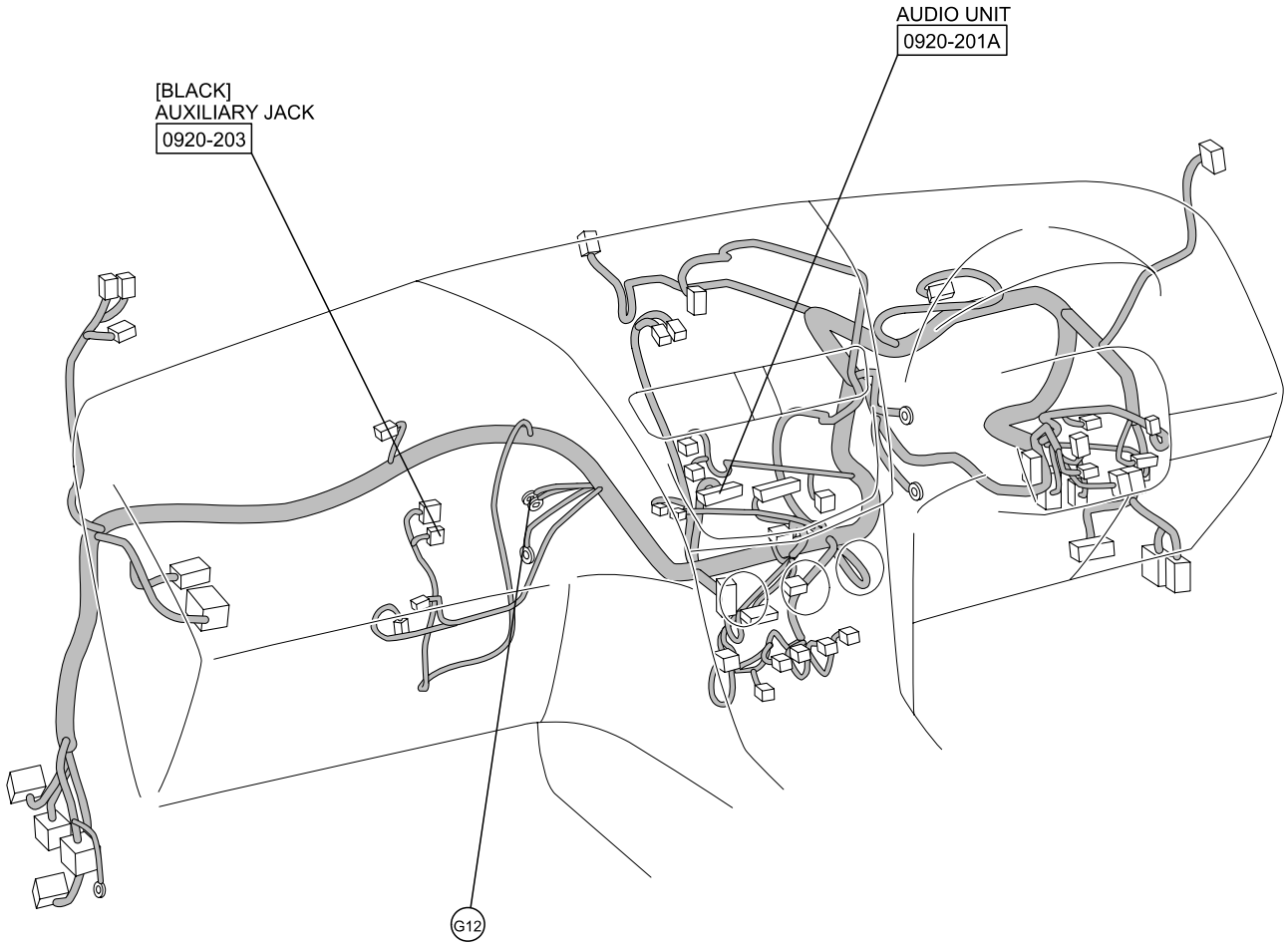

: INSTRUMENT PANEL HARNESS

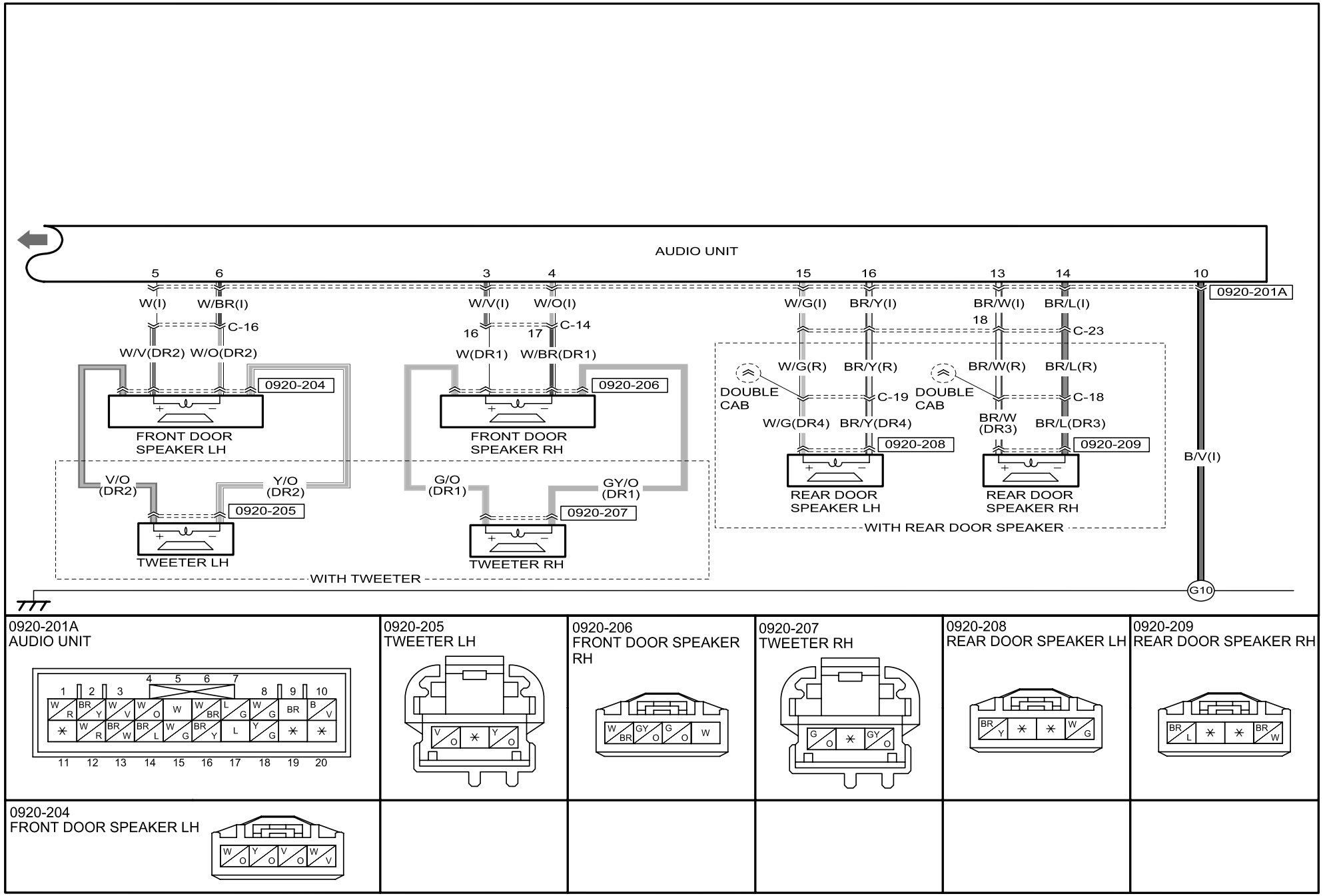

0920-201A
AUDIO UNIT

0920-205
TWEETER LH

0920-206
FRONT DOOR SPEAKER RH

0920-207
TWEETER RH

0920-208
REAR DOOR SPEAKER LH

0920-209
REAR DOOR SPEAKER RH

0920-204
FRONT DOOR SPEAKER LH

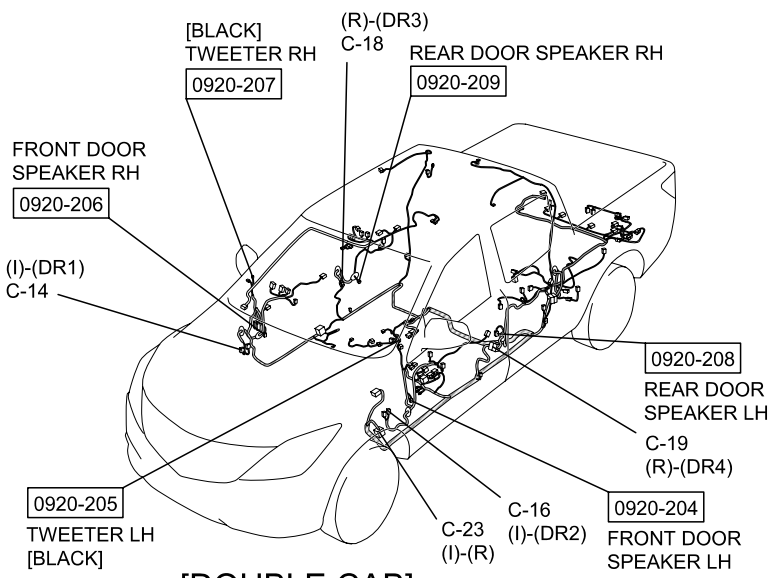

[DOUBLE CAB]

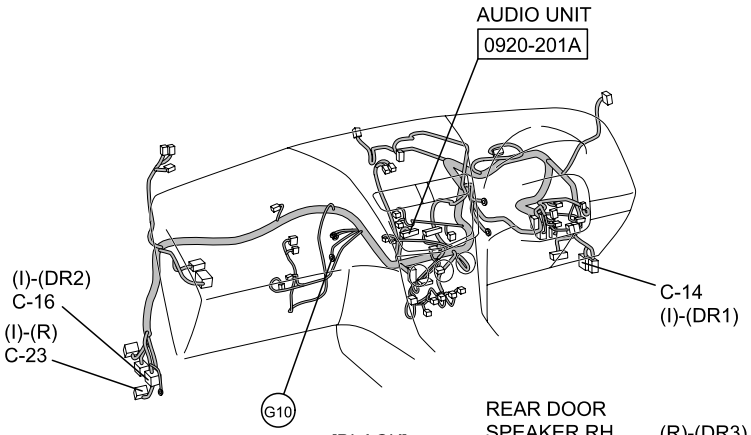

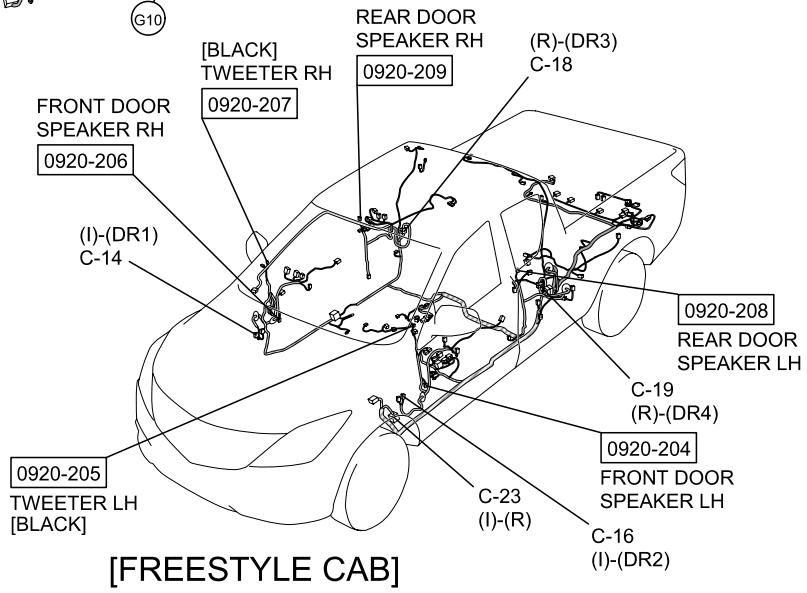

[FREESTYLE CAB]

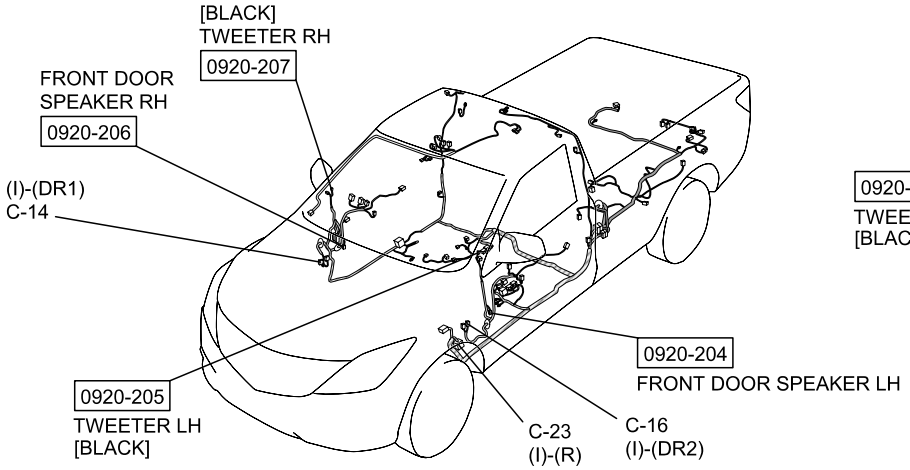

[REGULAR CAB]

: REAR HARNESS
: REAR NO.2 HARNESS
REAR NO.3 HARNESS
: DOOR HARNESS
: INTERIOR LIGHT HARNESS
: INSTRUMENT PANEL HARNESS

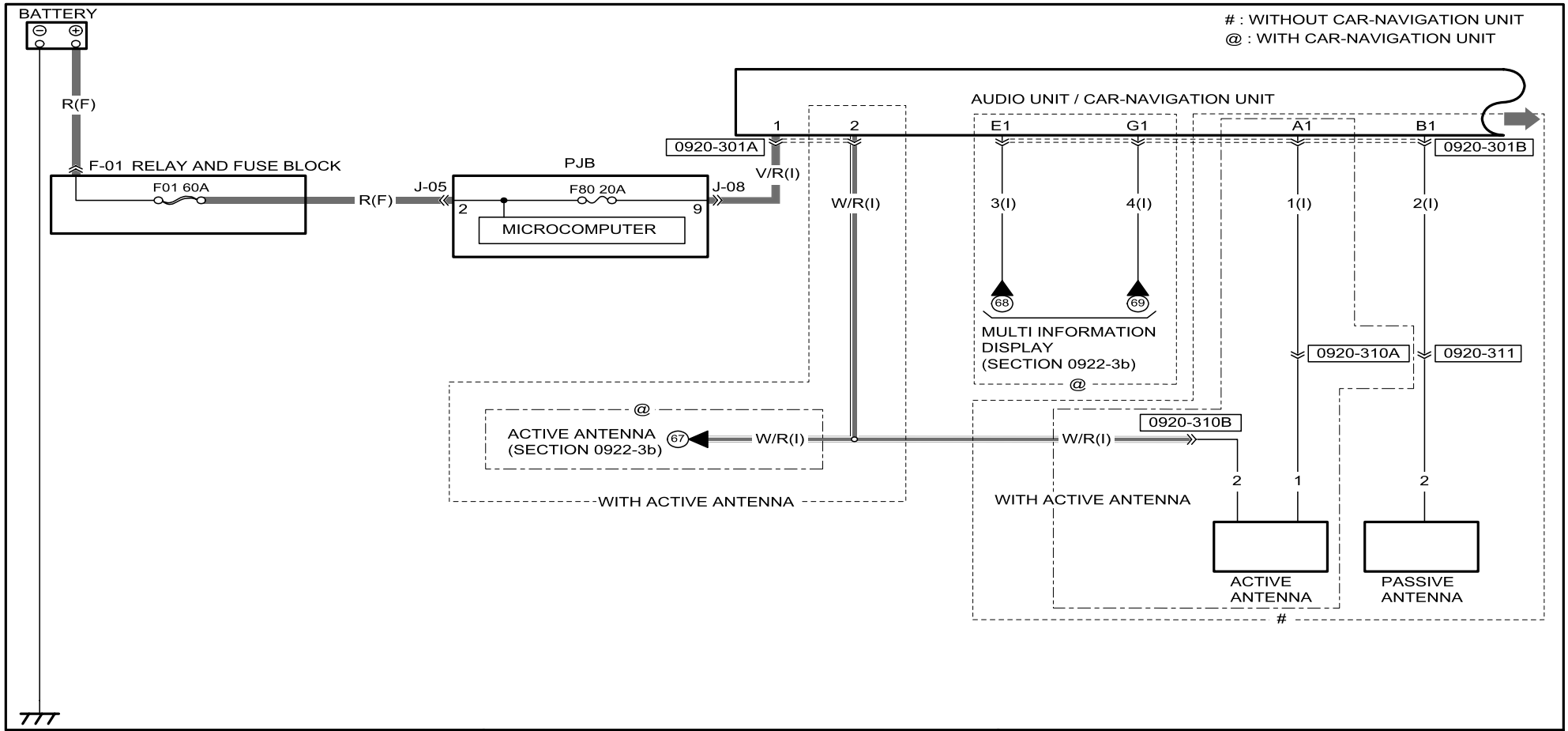

0920-301A
AUDIO UNIT / CAR-NAVIGATION UNIT

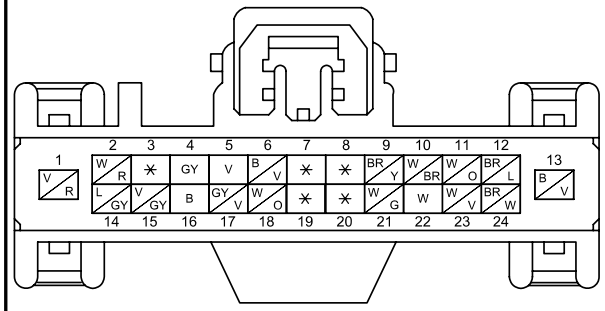

0920-301B
AUDIO UNIT / CAR-NAVIGATION UNIT

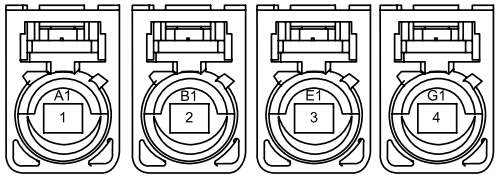

WIRE COLORS ARE INDICATED BY NUMBERS.

0920-310A
INSTRUMENT PANEL HARNESS-ACTIVE ANTENNA

WIRE COLORS ARE INDICATED BY NUMBERS.

0920-310B
INSTRUMENT PANEL HARNESS-ACTIVE ANTENNA

WIRE COLORS ARE INDICATED BY NUMBERS.

0920-311
INSTRUMENT PANEL HARNESS-PASSIVE ANTENNA

WIRE COLORS ARE INDICATED BY NUMBERS.

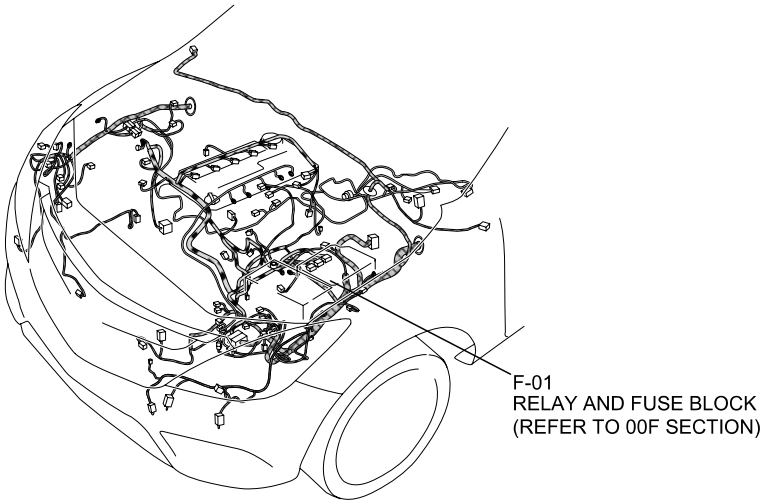

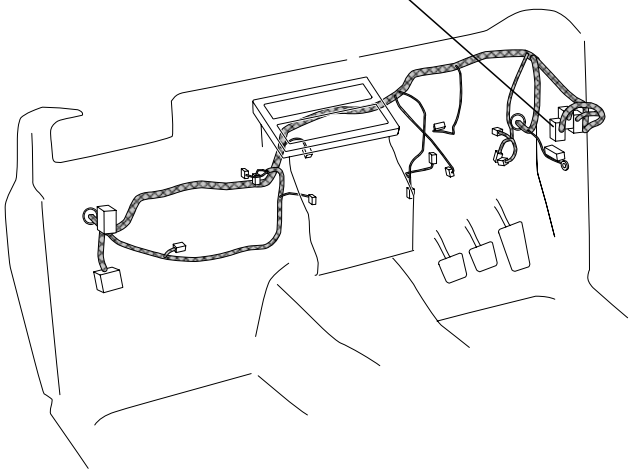

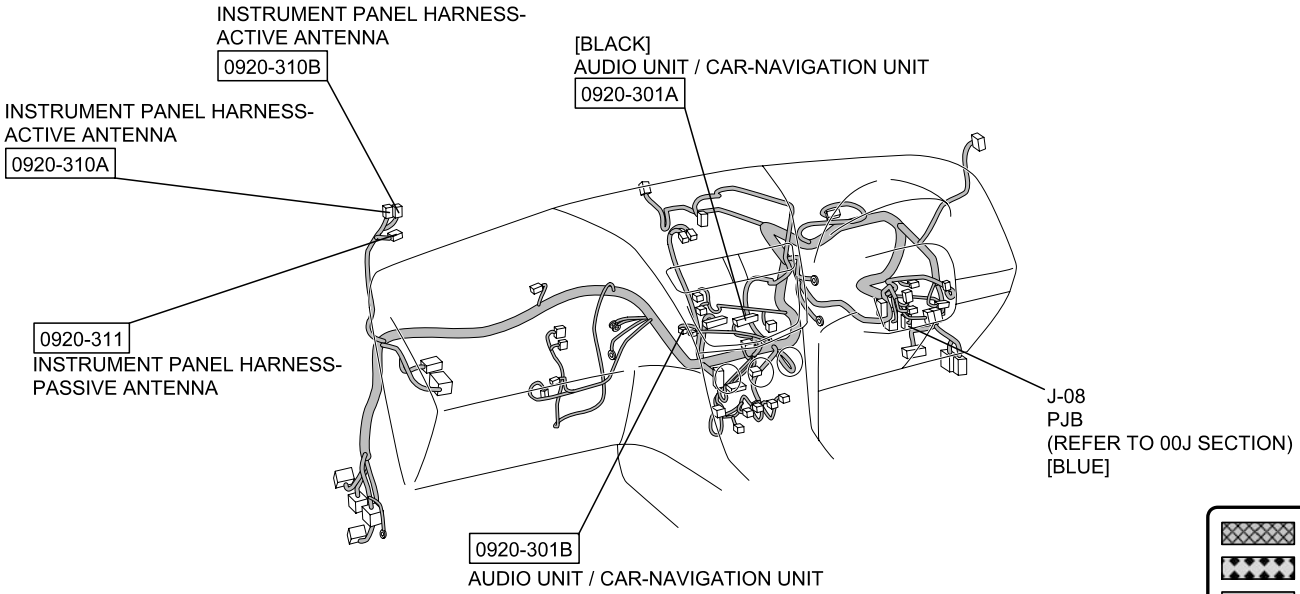

: FRONT HARNESS
: ENGINE HARNESS
: INSTRUMENT PANEL HARNESS

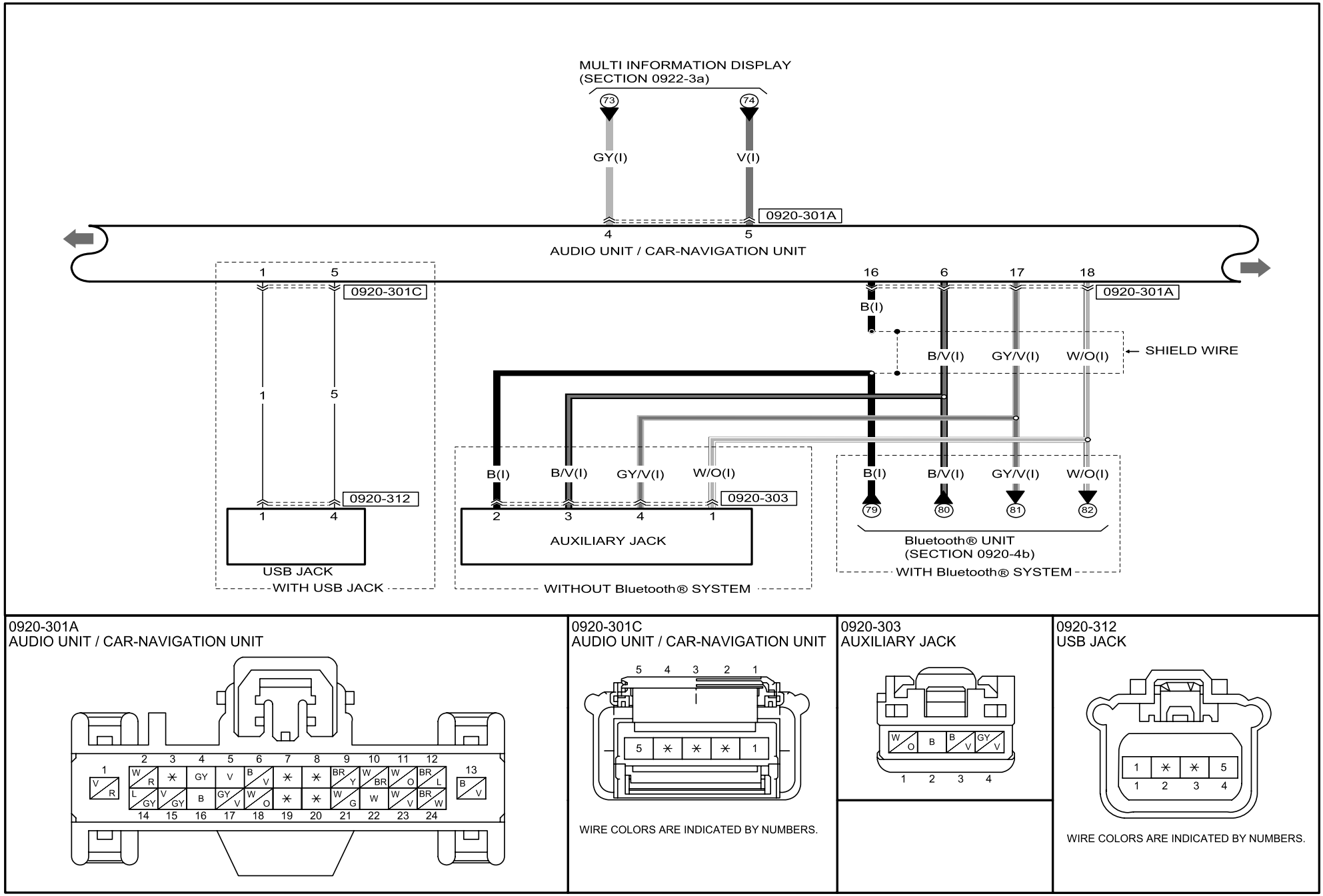
MULTI INFORMATION DISPLAY
(SECTION 0922-3a)
73
74
GY(I)
V(I)
0920-301A
4
5
AUDIO UNIT / CAR-NAVIGATION UNIT
1
5
0920-301C
16
6
17
18
0920-301A
B(I)
B/V(I)
GY/V(I)
W/O(I)
SHIELD WIRE
1
5
0920-312
1
4
USB JACK
WITH USB JACK
B(I)
B/V(I)
GY/V(I)
W/O(I)
0920-303
2
3
4
1
AUXILIARY JACK
WITHOUT Bluetooth® SYSTEM
B(I)
B/V(I)
GY/V(I)
W/O(I)
79
80
81
82
Bluetooth® UNIT
(SECTION 0920-4b)
WITH Bluetooth® SYSTEM
0920-301A
AUDIO UNIT / CAR-NAVIGATION UNIT
0920-301C
AUDIO UNIT / CAR-NAVIGATION UNIT
5 4 3 2 1
WIRE COLORS ARE INDICATED BY NUMBERS.
0920-303
AUXILIARY JACK
1 2 3 4
0920-312
USB JACK
1 2 3 4
WIRE COLORS ARE INDICATED BY NUMBERS.

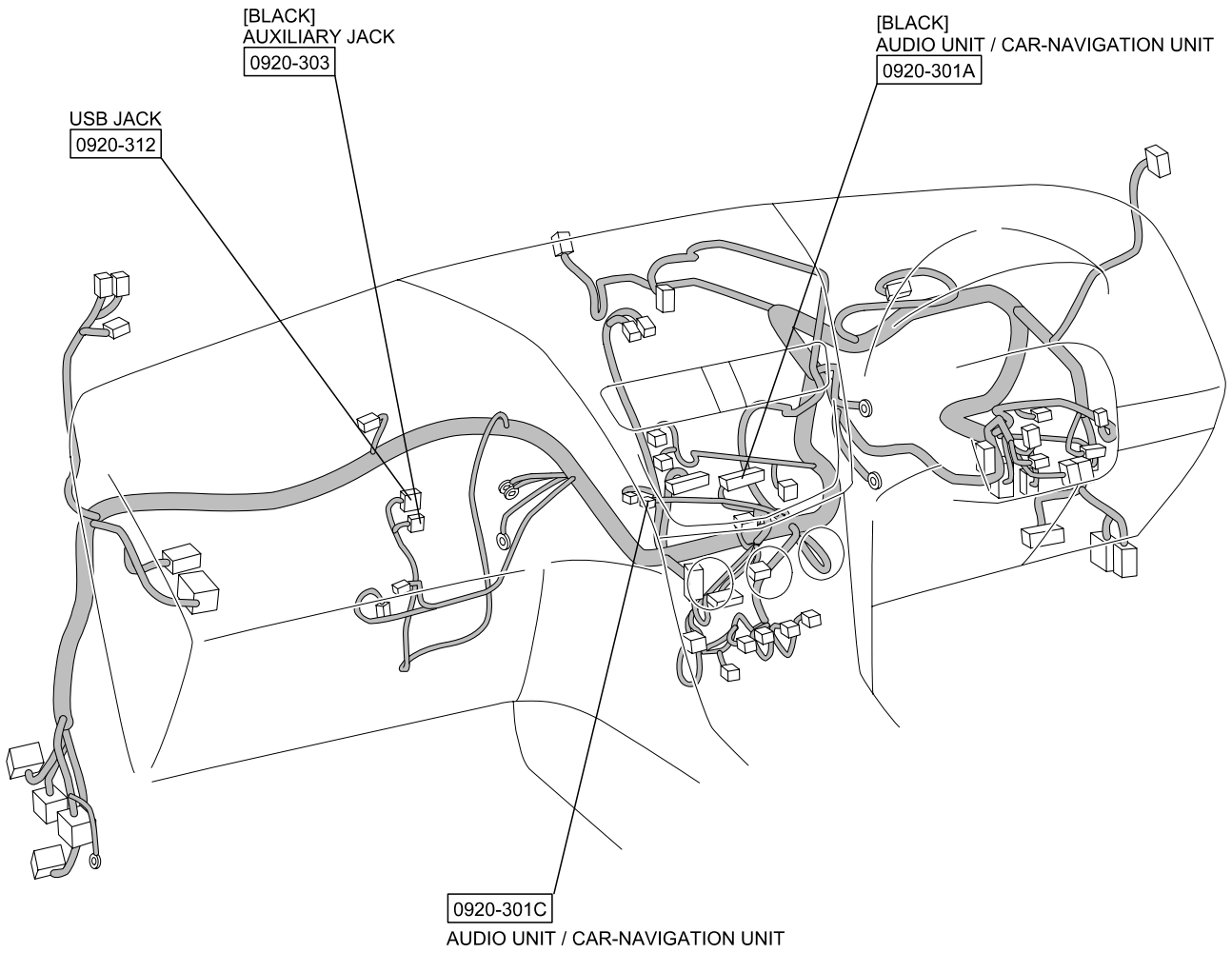

: INSTRUMENT PANEL HARNESS

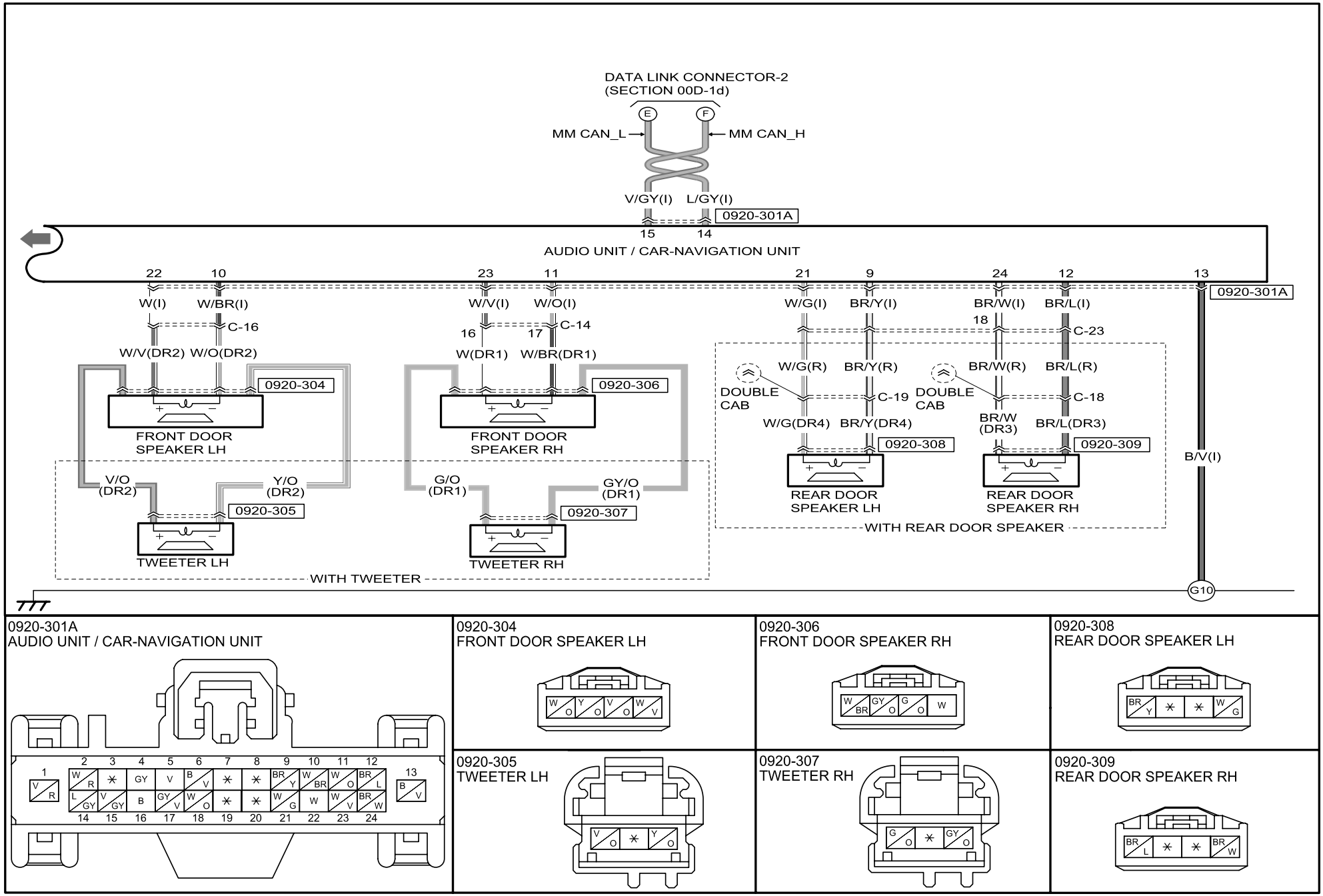

0920-301A
AUDIO UNIT / CAR-NAVIGATION UNIT

0920-304
FRONT DOOR SPEAKER LH

0920-306
FRONT DOOR SPEAKER RH

0920-308
REAR DOOR SPEAKER LH

0920-305
TWEETER LH

0920-307
TWEETER RH

0920-309
REAR DOOR SPEAKER RH

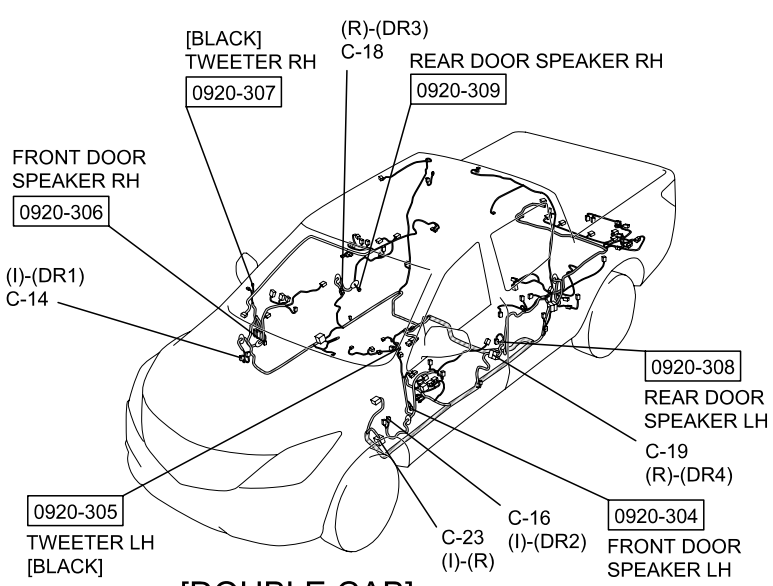

[DOUBLE CAB]

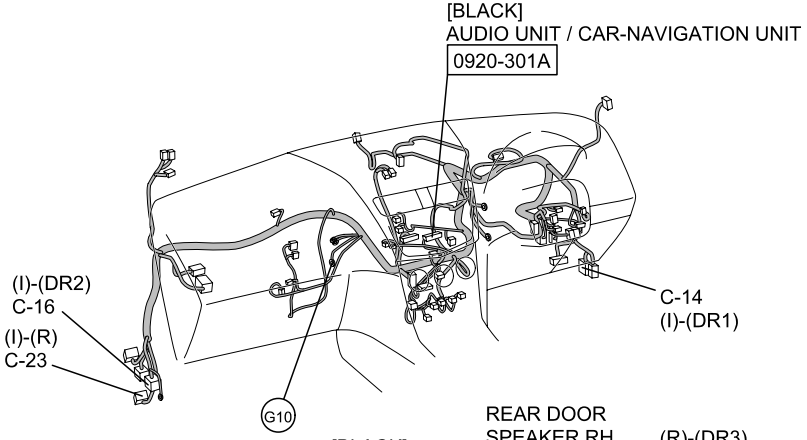

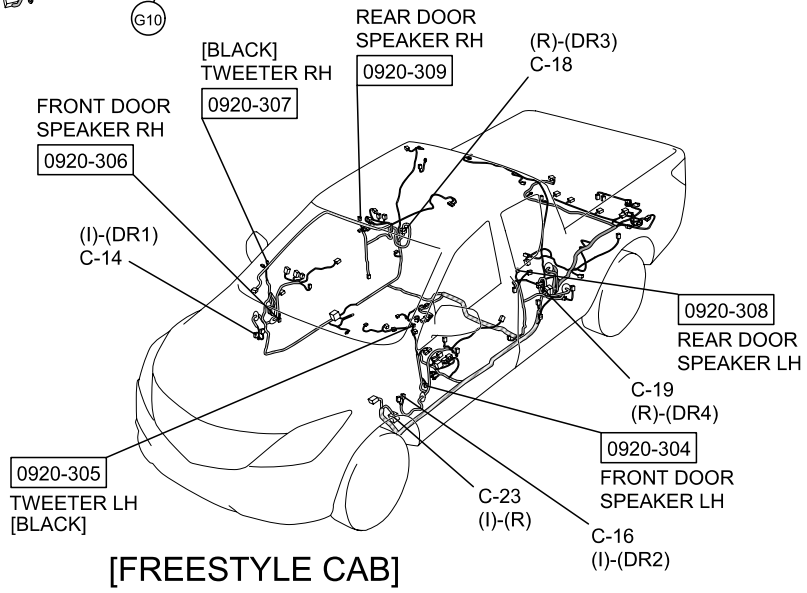

[FREESTYLE CAB]

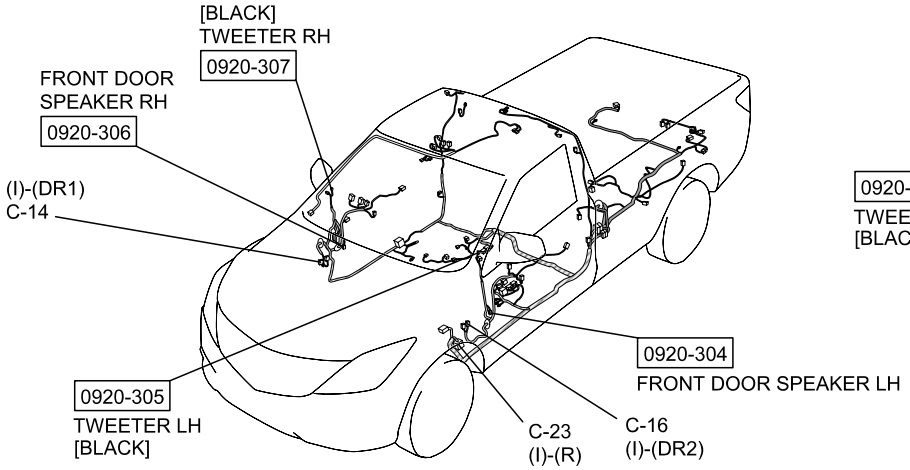

[REGULAR CAB]

: REAR HARNESS
: REAR NO.2 HARNESS
REAR NO.3 HARNESS
: DOOR HARNESS
: INTERIOR LIGHT HARNESS
: INSTRUMENT PANEL HARNESS

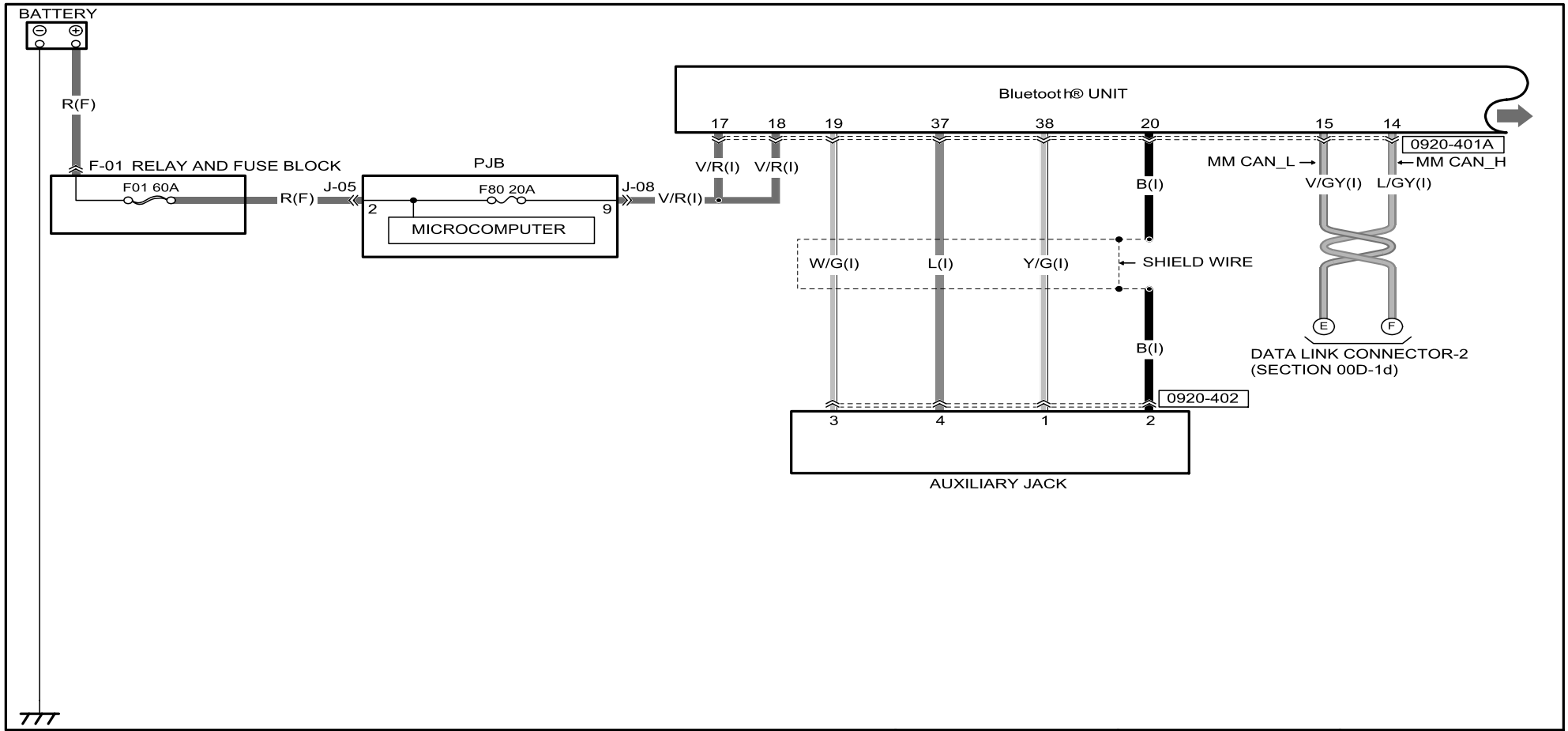

0920-401A
Bluetooth® UNIT

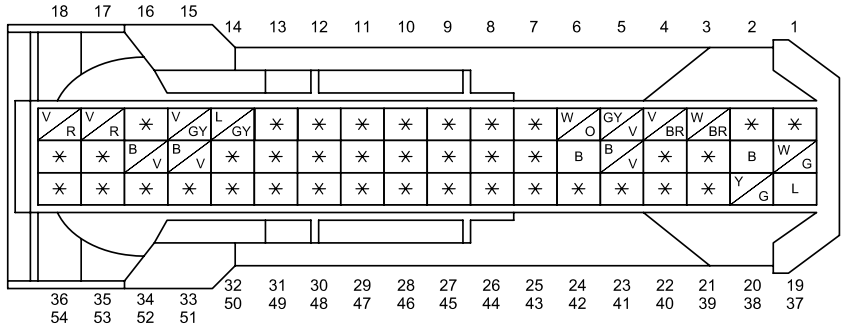

0920-402
AUXILIARY JACK

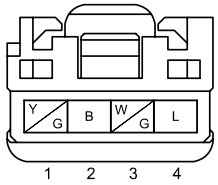

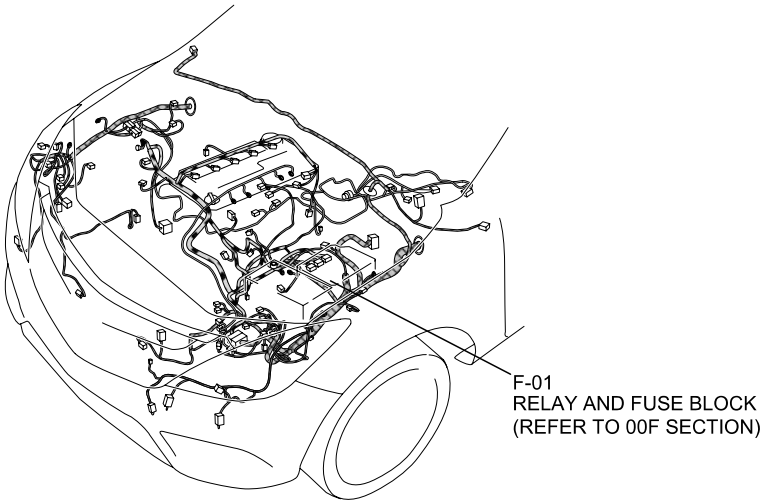

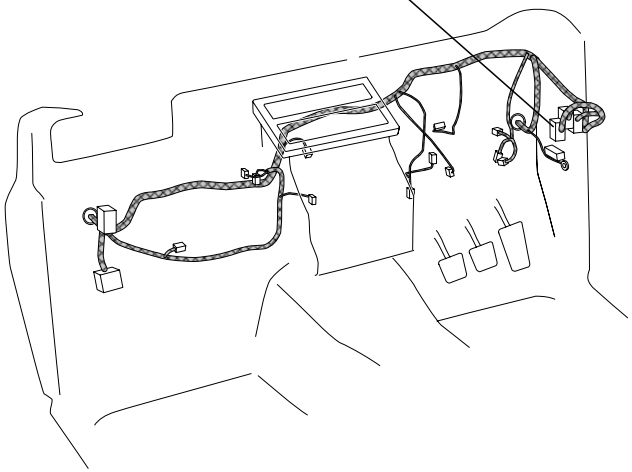

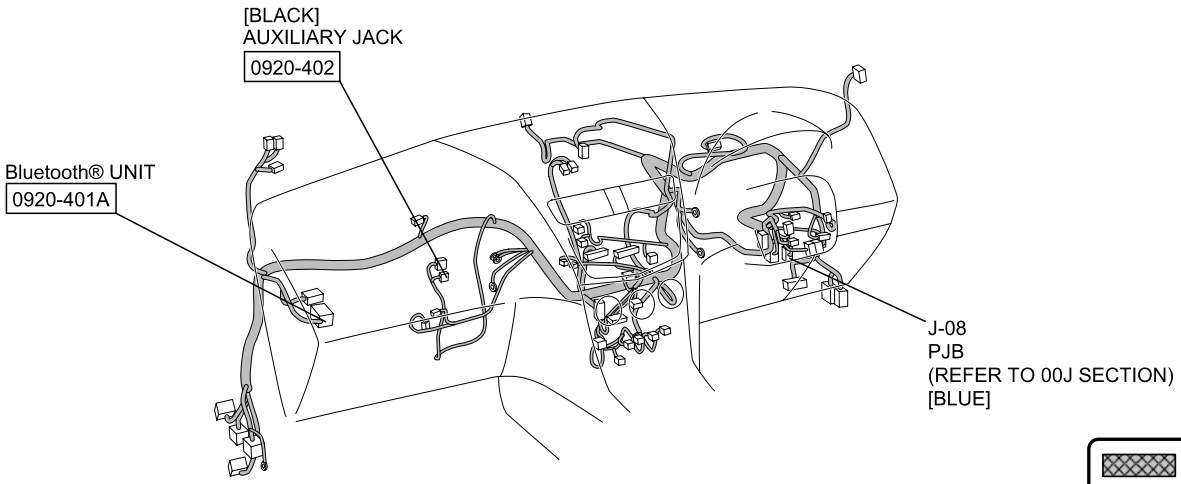

: FRONT HARNESS
: ENGINE HARNESS
: INSTRUMENT PANEL HARNESS

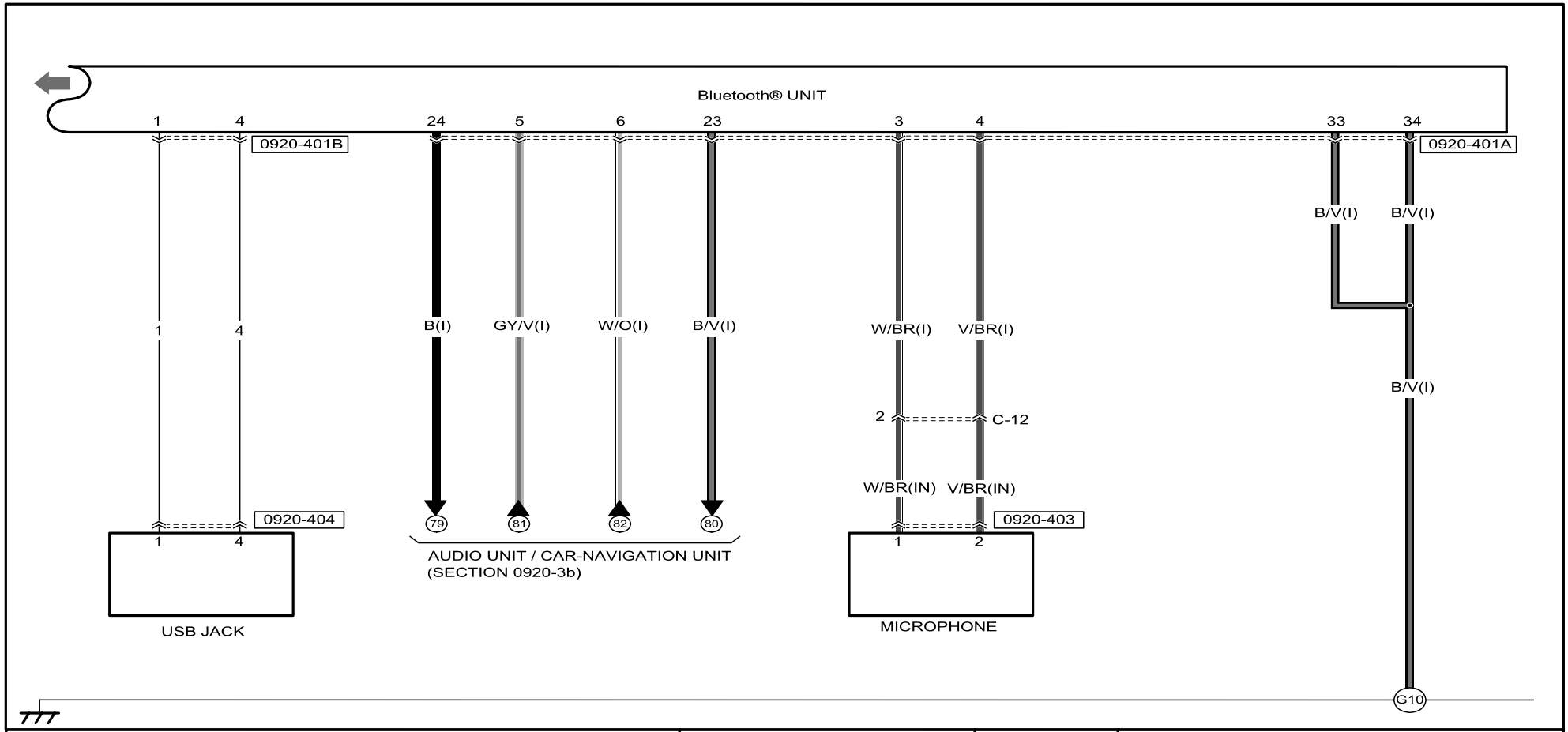

0920-401A
Bluetooth® UNIT

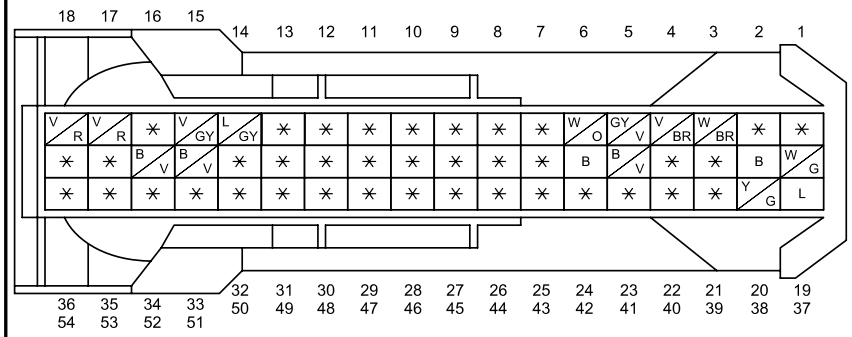

0920-401B
Bluetooth® UNIT

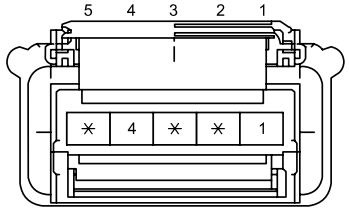

WIRE COLORS ARE INDICATED BY NUMBERS.

0920-403
MICROPHONE

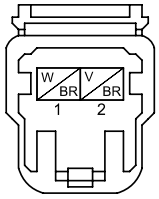

0920-404
USB JACK

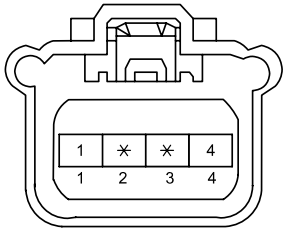

WIRE COLORS ARE INDICATED BY NUMBERS.

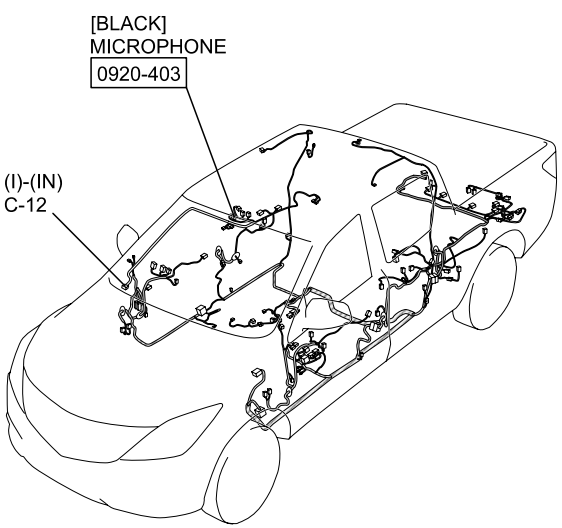

[DOUBLE CAB]

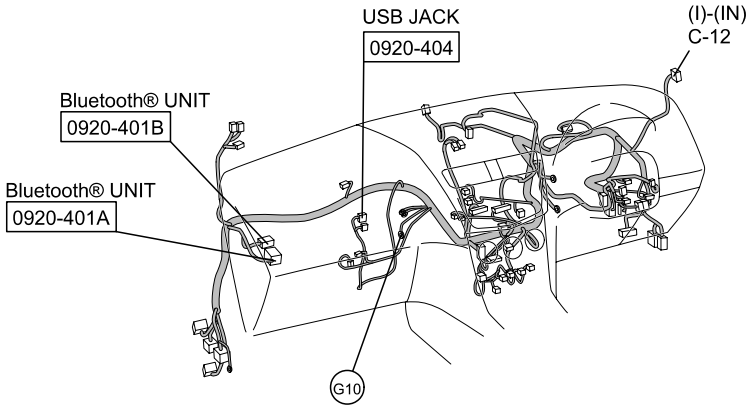

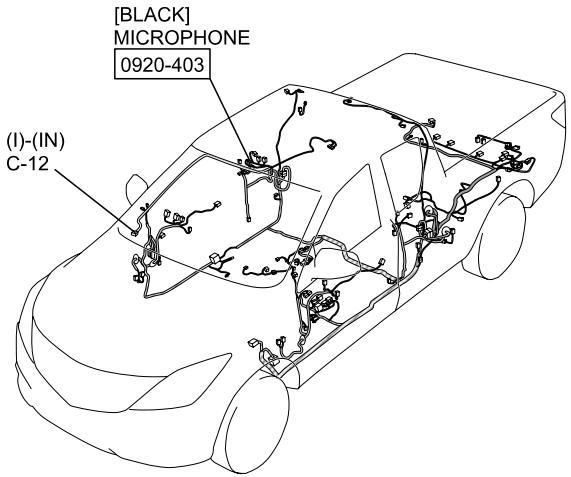

[FREESTYLE CAB]

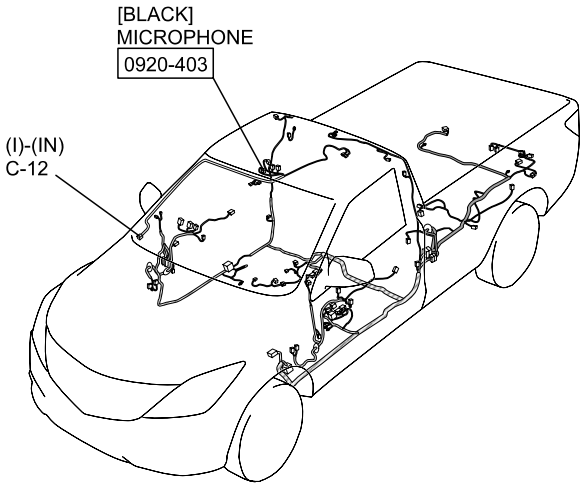

[REGULAR CAB]

: REAR HARNESS
: REAR NO.2 HARNESS
REAR NO.3 HARNESS
: DOOR HARNESS
: INTERIOR LIGHT HARNESS
: INSTRUMENT PANEL HARNESS

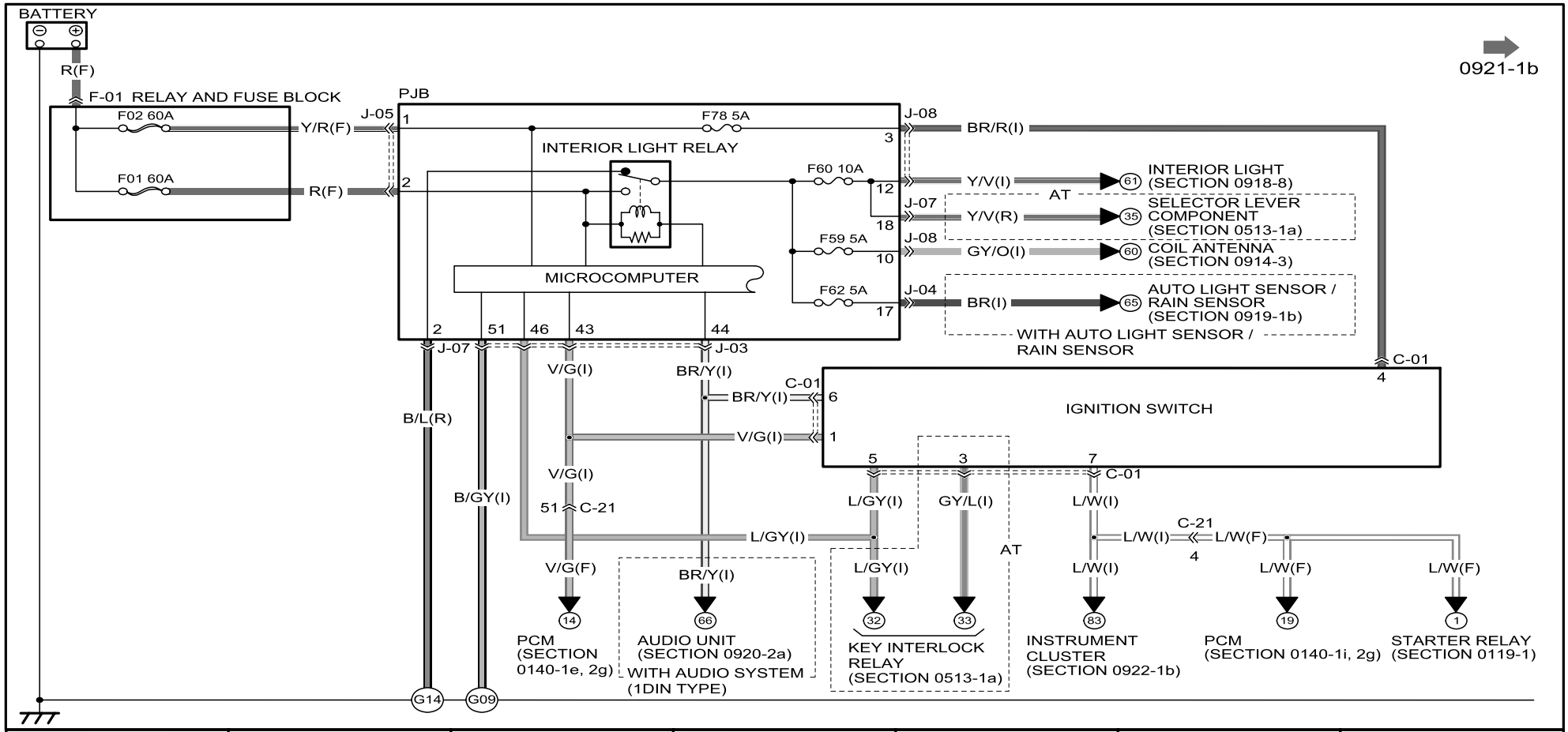
BATTERY
R(F)
F-01 RELAY AND FUSE BLOCK
F02 60A
F01 60A
Y/R(F)
R(F)
J-05
PJB
F78 5A
INTERIOR LIGHT RELAY
MICROCOMPUTER
F60 10A
F59 5A
F62 5A
J-08
BR/R(I)
Y/V(I)
INTERIOR LIGHT (SECTION 0918-8)
AT
J-07
Y/V(R)
SELECTOR LEVER COMPONENT (SECTION 0513-1a)
GY/O(I)
COIL ANTENNA (SECTION 0914-3)
J-04
BR(I)
AUTO LIGHT SENSOR / RAIN SENSOR (SECTION 0919-1b)
WITH AUTO LIGHT SENSOR / RAIN SENSOR
C-01
IGNITION SWITCH
J-03
V/G(I)
BR/Y(I)
B/L(R)
B/GY(I)
C-21
L/GY(I)
GY/L(I)
L/W(I)
L/W(F)
V/G(F)
PCM (SECTION 0140-1e, 2g)
AUDIO UNIT (SECTION 0920-2a)
WITH AUDIO SYSTEM (1DIN TYPE)
KEY INTERLOCK RELAY (SECTION 0513-1a)
INSTRUMENT CLUSTER (SECTION 0922-1b)
PCM (SECTION 0140-1i, 2g)
STARTER RELAY (SECTION 0119-1)
G14
G09
0921-1b

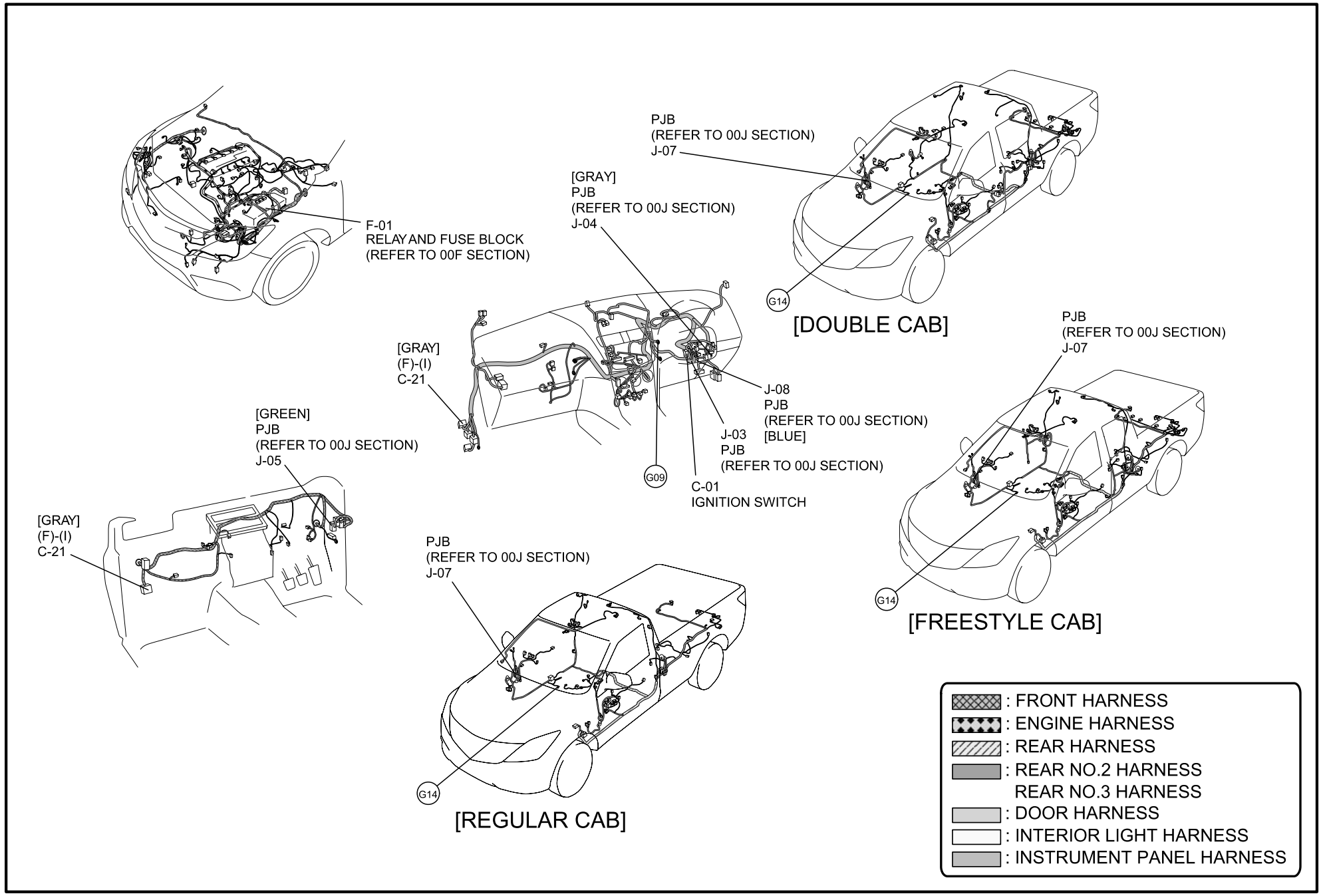
F-01
RELAY AND FUSE BLOCK
(REFER TO 00F SECTION)
PJB
(REFER TO 00J SECTION)
J-07
[GRAY]
PJB
(REFER TO 00J SECTION)
J-04
G14
[DOUBLE CAB]
[GRAY]
(F)-(I)
C-21
J-08
PJB
(REFER TO 00J SECTION)
[BLUE]
J-03
PJB
(REFER TO 00J SECTION)
G09
C-01
IGNITION SWITCH
PJB
(REFER TO 00J SECTION)
J-07
G14
[FREESTYLE CAB]
[GREEN]
PJB
(REFER TO 00J SECTION)
J-05
[GRAY]
(F)-(I)
C-21
PJB
(REFER TO 00J SECTION)
J-07
G14
[REGULAR CAB]
: FRONT HARNESS
: ENGINE HARNESS
: REAR HARNESS
: REAR NO.2 HARNESS
REAR NO.3 HARNESS
: DOOR HARNESS
: INTERIOR LIGHT HARNESS
: INSTRUMENT PANEL HARNESS

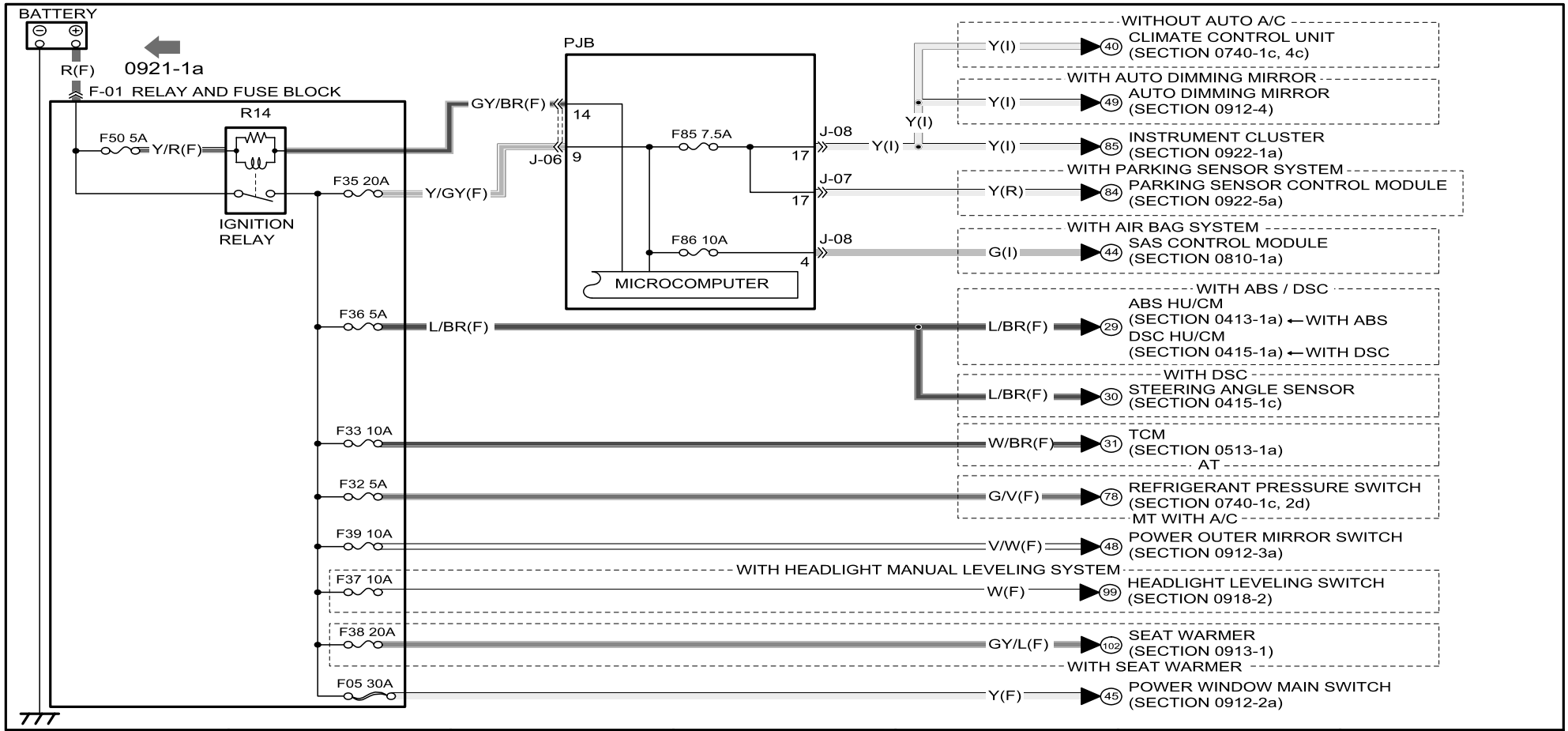
BATTERY
R(F)
0921-1a
F-01 RELAY AND FUSE BLOCK
R14
F50 5A
Y/R(F)
IGNITION RELAY
F35 20A
Y/GY(F)
GY/BR(F)
J-06
PJB
14
9
F85 7.5A
F86 10A
17
17
4
J-08
J-07
J-08
MICROCOMPUTER
Y(I)
Y(I)
WITHOUT AUTO A/C
CLIMATE CONTROL UNIT (SECTION 0740-1c, 4c)
WITH AUTO DIMMING MIRROR
AUTO DIMMING MIRROR (SECTION 0912-4)
INSTRUMENT CLUSTER (SECTION 0922-1a)
WITH PARKING SENSOR SYSTEM
Y(R)
PARKING SENSOR CONTROL MODULE (SECTION 0922-5a)
WITH AIR BAG SYSTEM
G(I)
SAS CONTROL MODULE (SECTION 0810-1a)
F36 5A
L/BR(F)
WITH ABS / DSC
ABS HU/CM (SECTION 0413-1a) ←WITH ABS
DSC HU/CM (SECTION 0415-1a) ←WITH DSC
WITH DSC
STEERING ANGLE SENSOR (SECTION 0415-1c)
F33 10A
W/BR(F)
TCM (SECTION 0513-1a)
AT
F32 5A
G/V(F)
REFRIGERANT PRESSURE SWITCH (SECTION 0740-1c, 2d)
MT WITH A/C
F39 10A
V/W(F)
POWER OUTER MIRROR SWITCH (SECTION 0912-3a)
WITH HEADLIGHT MANUAL LEVELING SYSTEM
F37 10A
W(F)
HEADLIGHT LEVELING SWITCH (SECTION 0918-2)
F38 20A
GY/L(F)
SEAT WARMER (SECTION 0913-1)
WITH SEAT WARMER
F05 30A
Y(F)
POWER WINDOW MAIN SWITCH (SECTION 0912-2a)
40
49
85
84
44
29
30
31
78
48
99
102
45

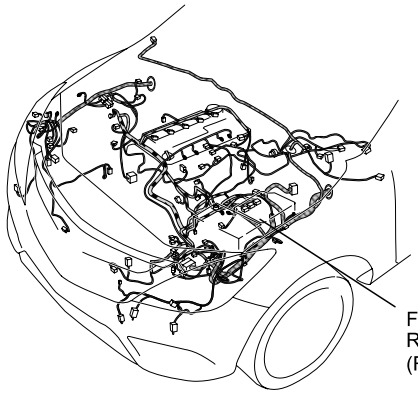

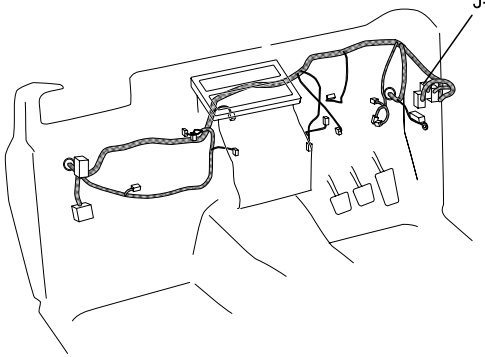

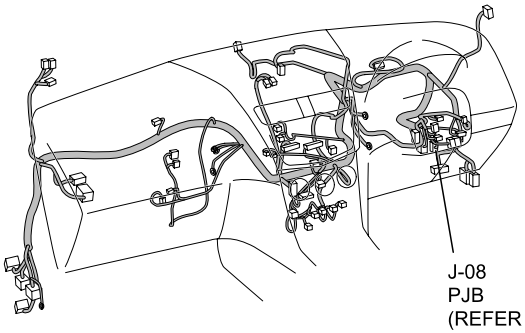

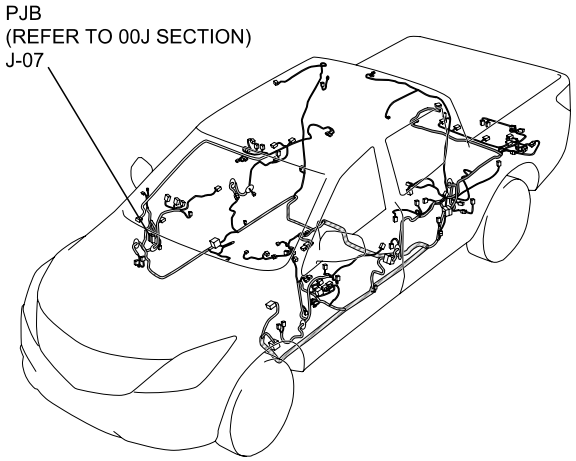

: FRONT HARNESS
: ENGINE HARNESS
: REAR HARNESS
: REAR NO.2 HARNESS
REAR NO.3 HARNESS
: DOOR HARNESS
: INTERIOR LIGHT HARNESS
: INSTRUMENT PANEL HARNESS

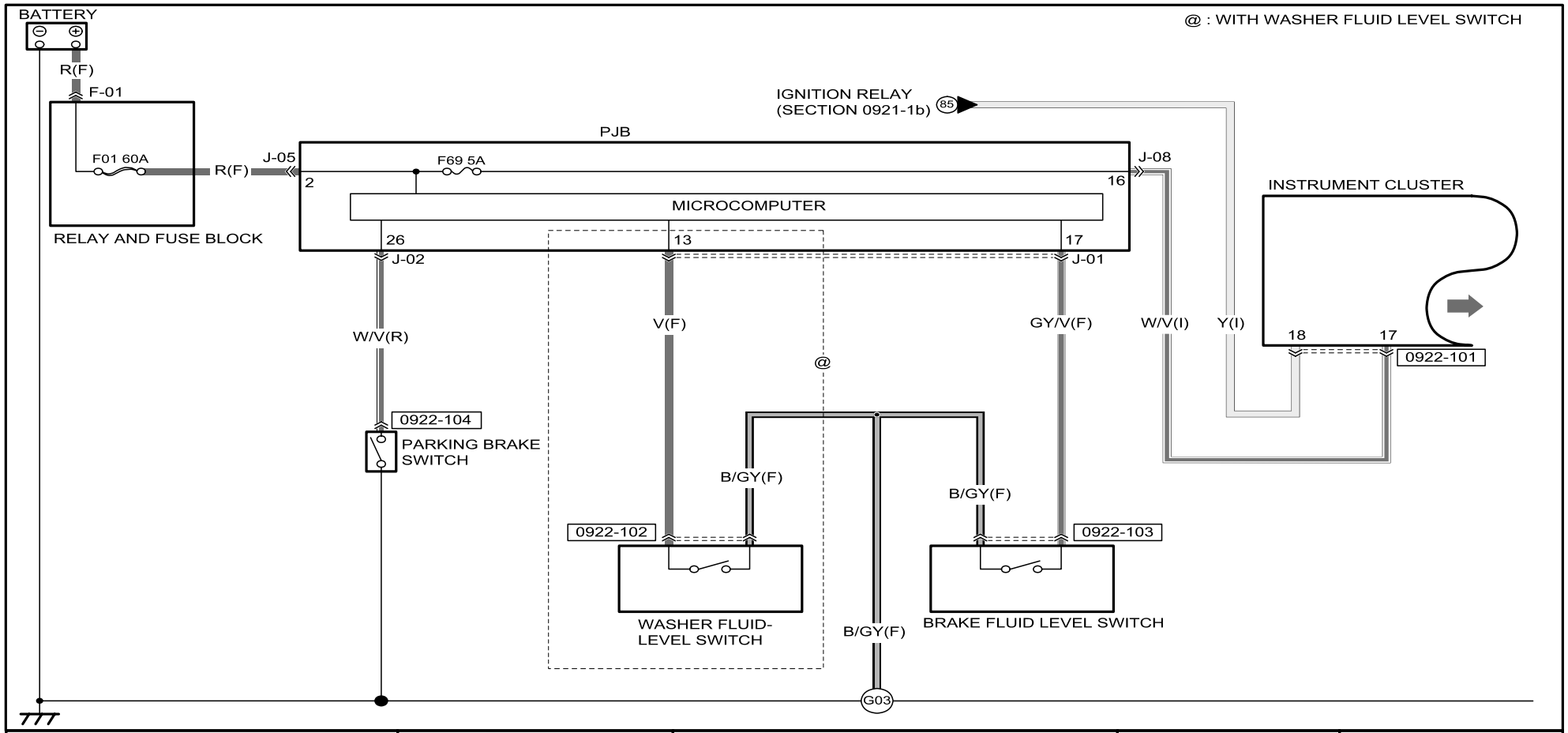

0922-101
INSTRUMENT CLUSTER

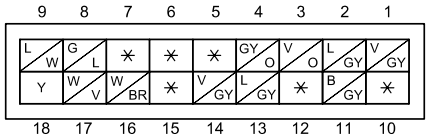

0922-102
WASHER FLUID-LEVEL SWITCH

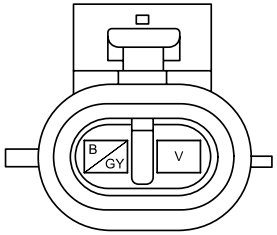

0922-103
BRAKE FLUID LEVEL SWITCH

0922-104
PARKING BRAKE SWITCH

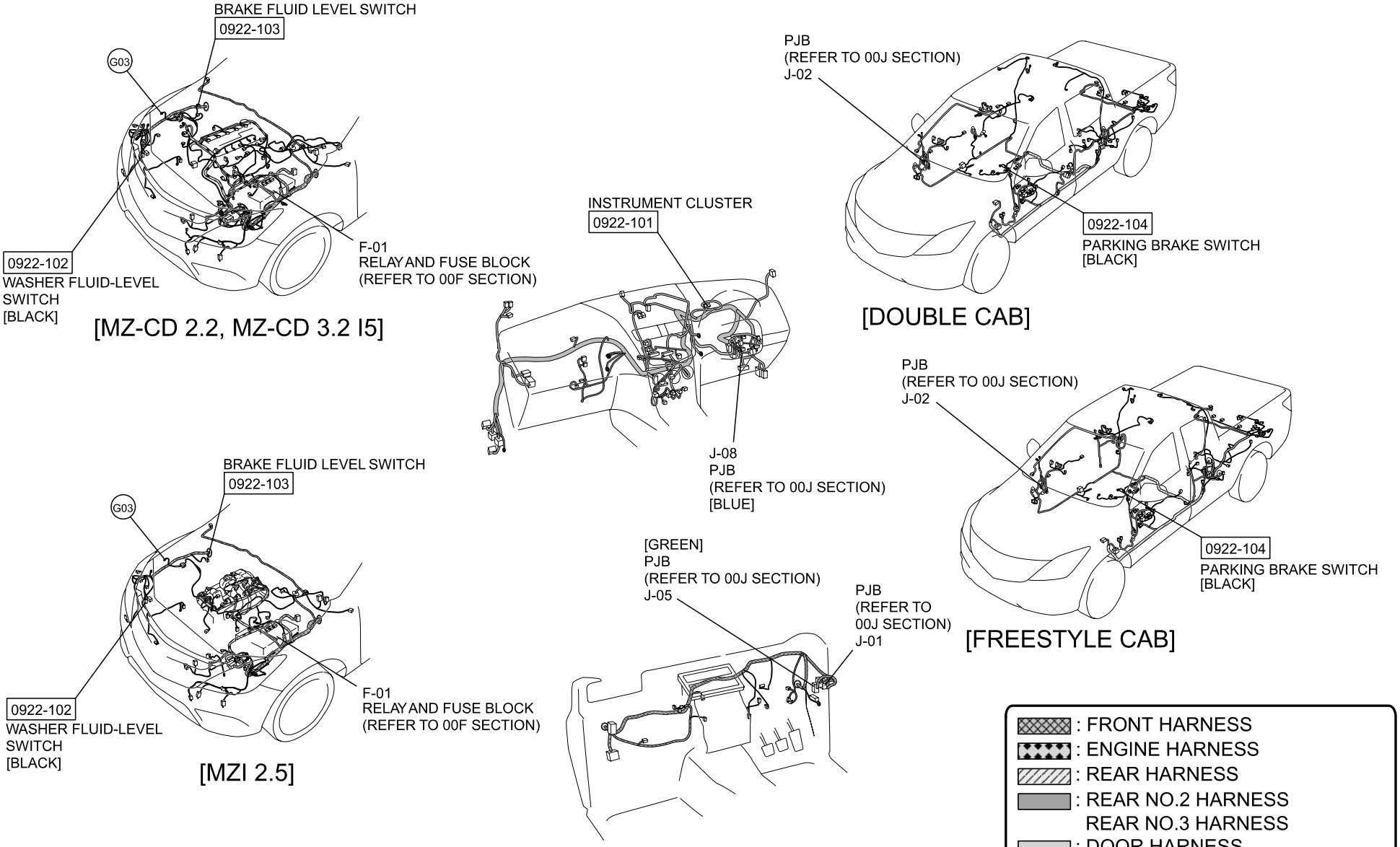
BRAKE FLUID LEVEL SWITCH
0922-103
G03
0922-102
WASHER FLUID-LEVEL SWITCH [BLACK]
F-01
RELAY AND FUSE BLOCK
(REFER TO 00F SECTION)
[MZ-CD 2.2, MZ-CD 3.2 I5]
INSTRUMENT CLUSTER
0922-101
J-08
PJB
(REFER TO 00J SECTION)
[BLUE]
PJB
(REFER TO 00J SECTION)
J-02
0922-104
PARKING BRAKE SWITCH
[BLACK]
[DOUBLE CAB]
PJB
(REFER TO 00J SECTION)
J-02
0922-104
PARKING BRAKE SWITCH
[BLACK]
[FREESTYLE CAB]
BRAKE FLUID LEVEL SWITCH
0922-103
G03
0922-102
WASHER FLUID-LEVEL SWITCH [BLACK]
F-01
RELAY AND FUSE BLOCK
(REFER TO 00F SECTION)
[MZI 2.5]
[GREEN]
PJB
(REFER TO 00J SECTION)
J-05
PJB
(REFER TO 00J SECTION)
J-01
: FRONT HARNESS
: ENGINE HARNESS
: REAR HARNESS
: REAR NO.2 HARNESS
REAR NO.3 HARNESS
: DOOR HARNESS
: INTERIOR LIGHT HARNESS
: INSTRUMENT PANEL HARNESS

% : WITH AUDIO SYSTEM (1DIN TYPE)

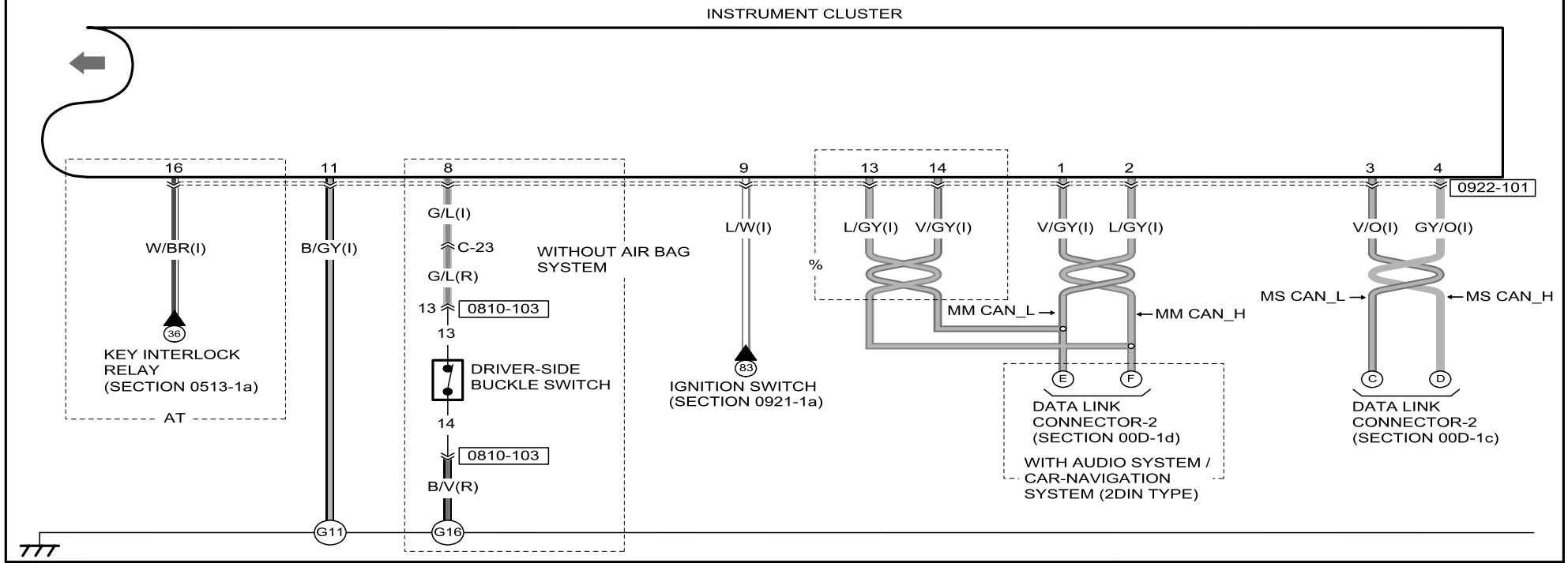

0810-103
REAR HARNESS-SHORT CORD

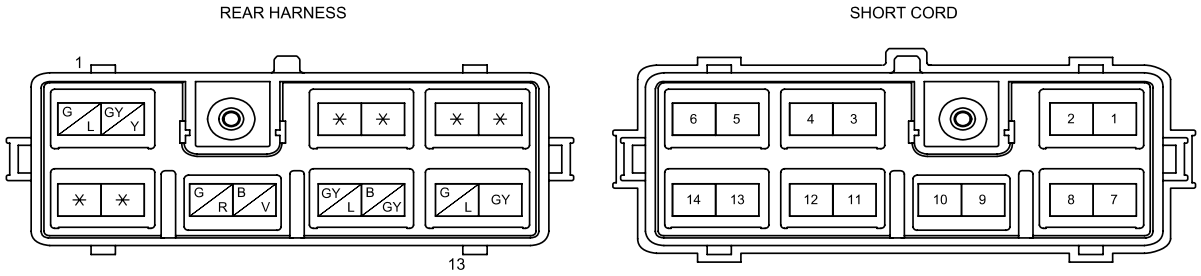

WIRE COLORS ARE INDICATED BY NUMBERS.

0922-101
INSTRUMENT CLUSTER

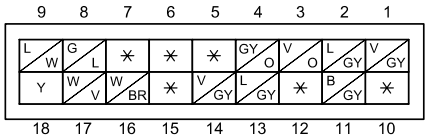

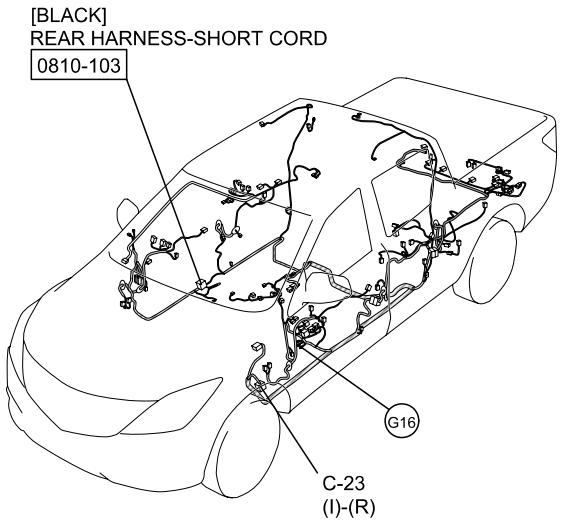

[DOUBLE CAB]

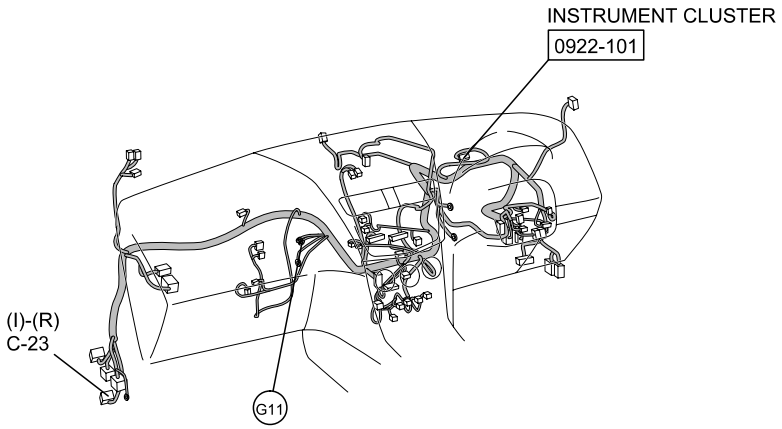

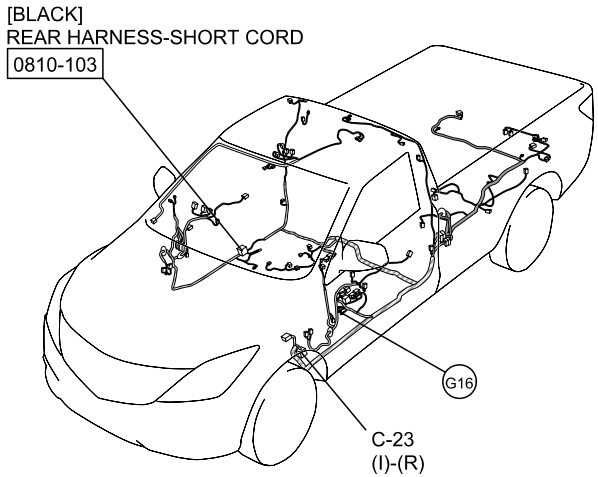

[REGULAR CAB]

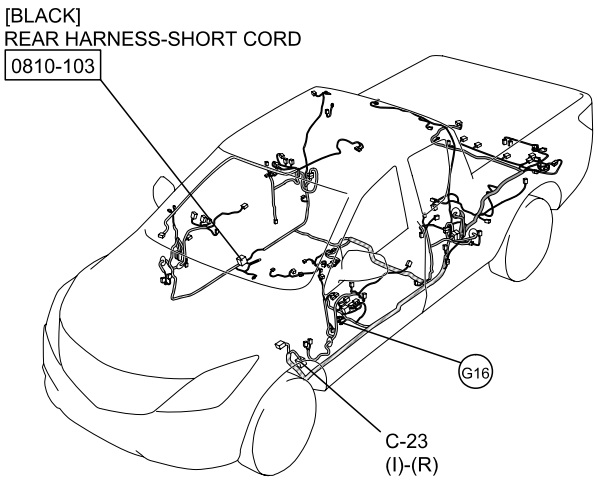

[FREESTYLE CAB]

: REAR HARNESS
: REAR NO.2 HARNESS
REAR NO.3 HARNESS
: DOOR HARNESS
: INTERIOR LIGHT HARNESS
: INSTRUMENT PANEL HARNESS

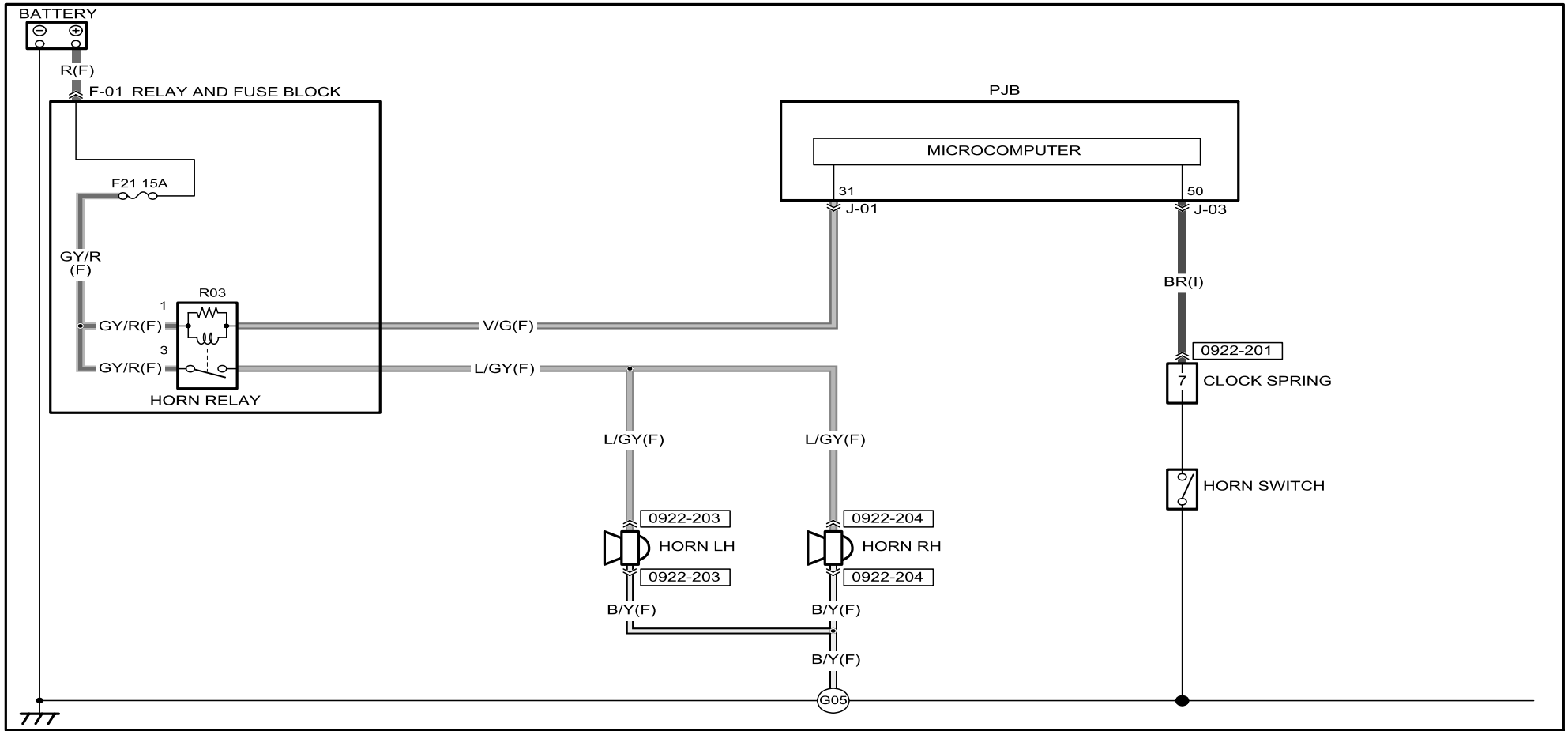

0922-201
INSTRUMENT PANEL HARNESS-CLOCK SPRING

INSTRUMENT PANEL HARNESS

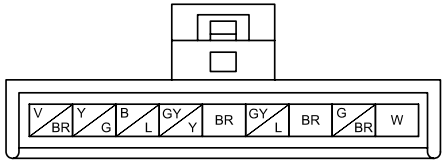

CLOCK SPRING

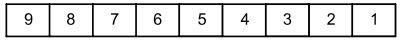

WIRE COLORS ARE INDICATED BY NUMBERS.

0922-203
HORN LH

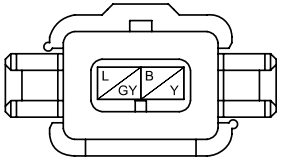

0922-204
HORN RH

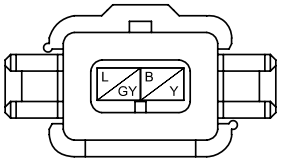

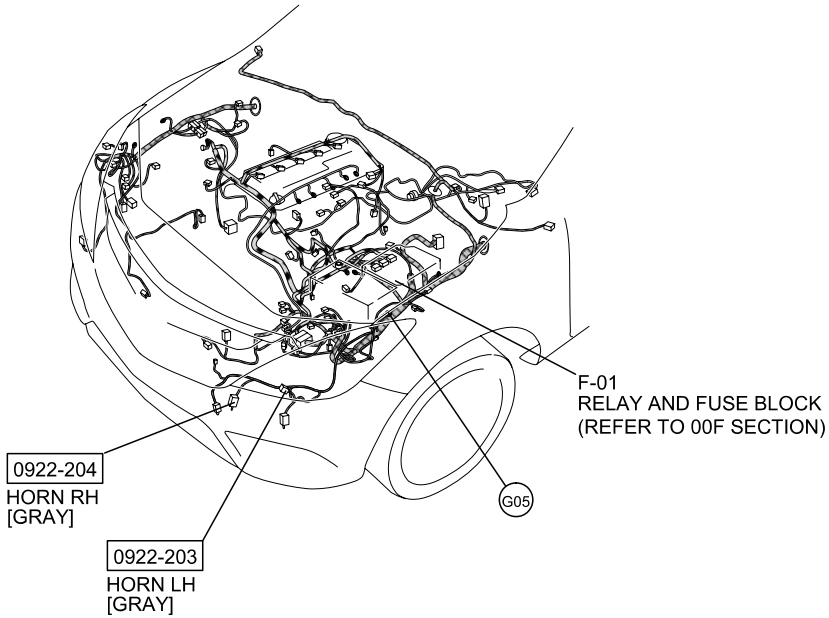

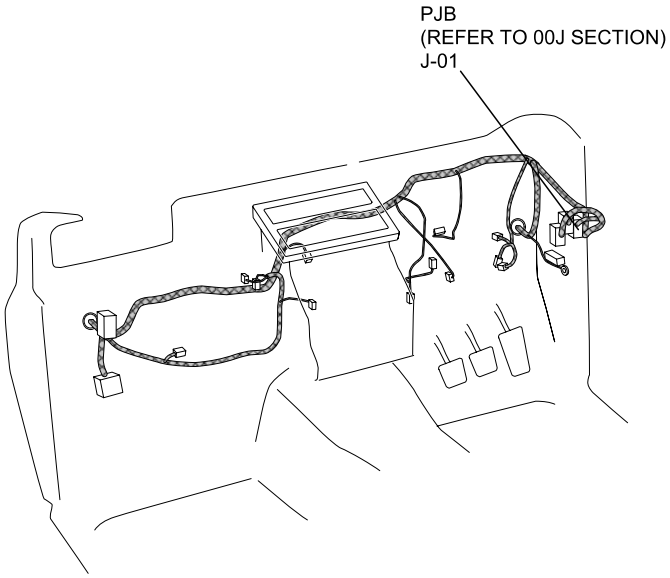

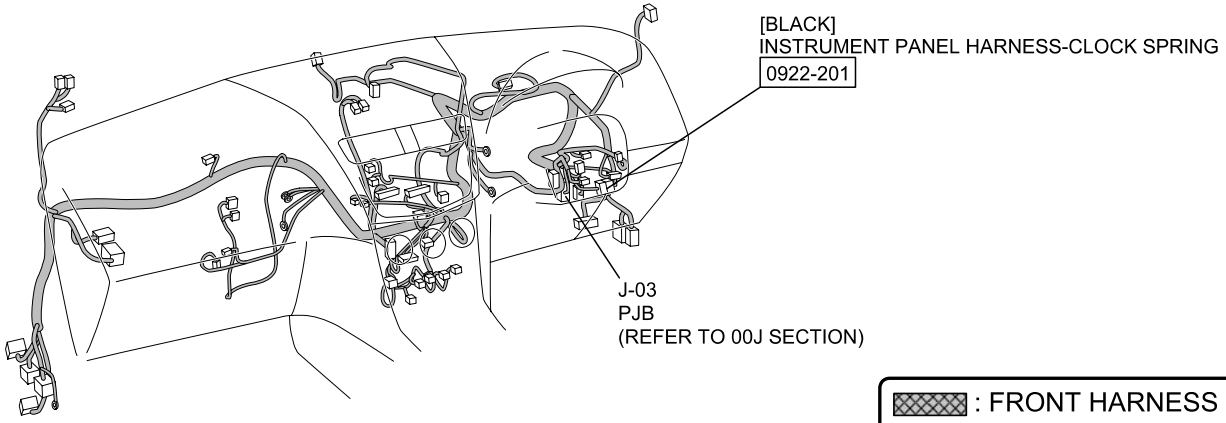

: FRONT HARNESS
: ENGINE HARNESS
: INSTRUMENT PANEL HARNESS

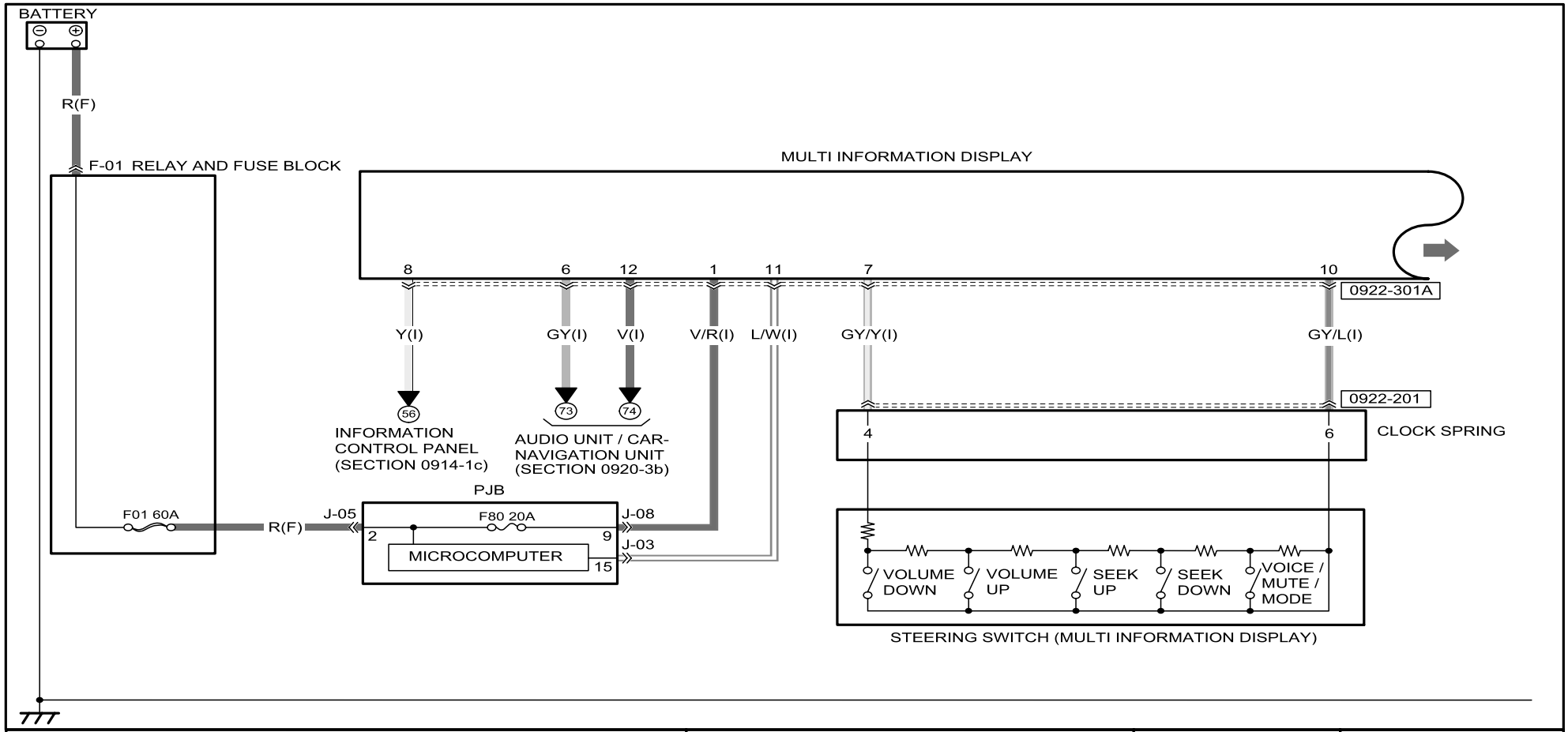

0922-201
INSTRUMENT PANEL HARNESS-CLOCK SPRING

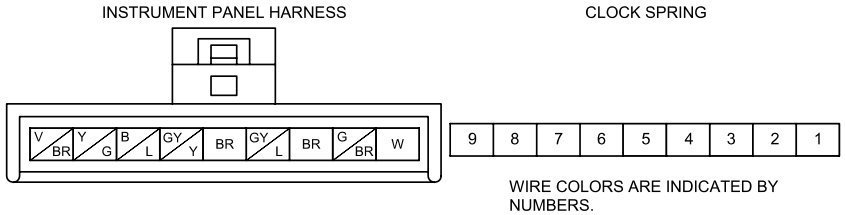

0922-301A
MULTI INFORMATION DISPLAY

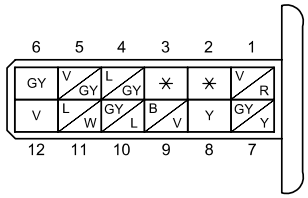

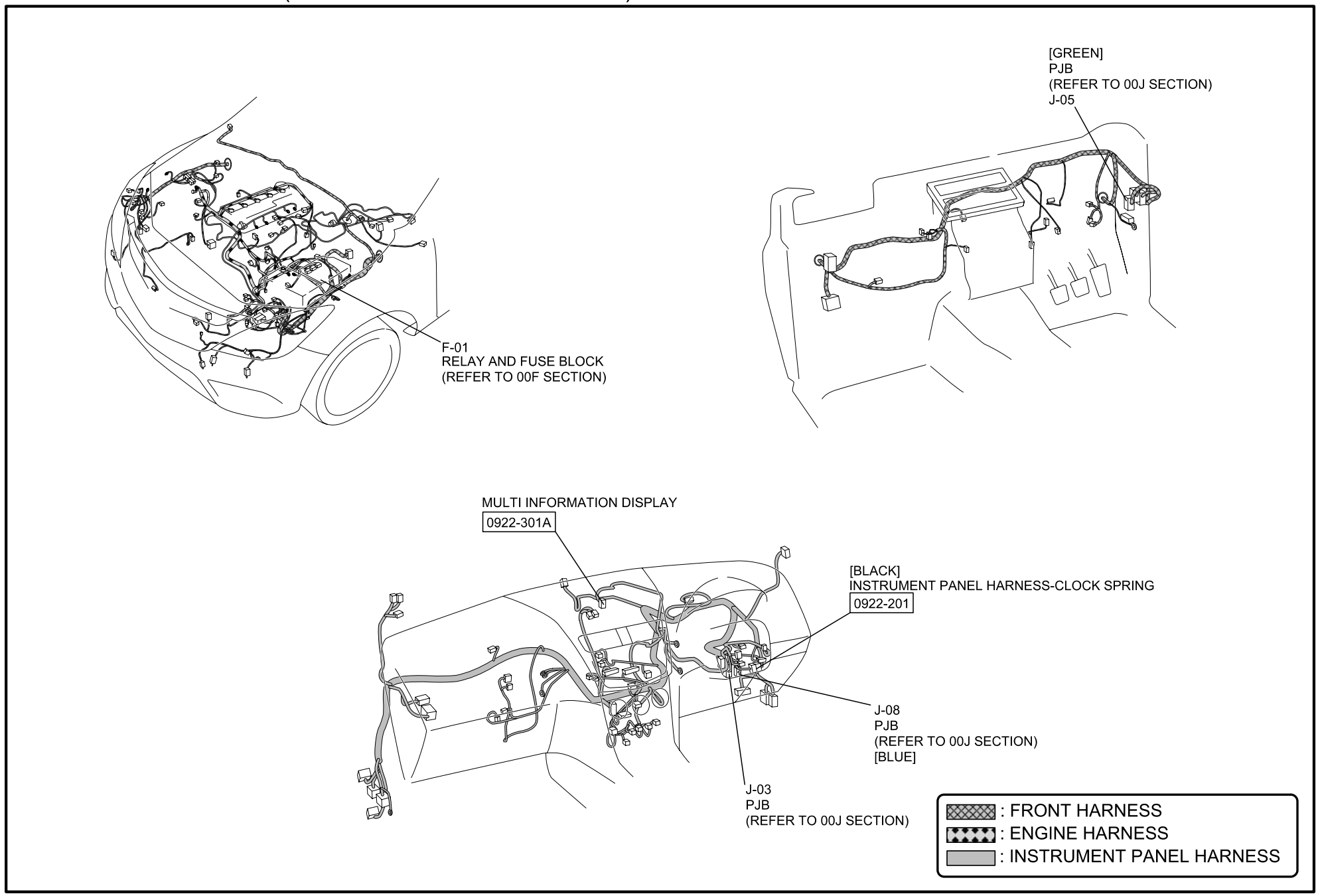
F-01
RELAY AND FUSE BLOCK
(REFER TO 00F SECTION)
[GREEN]
PJB
(REFER TO 00J SECTION)
J-05
MULTI INFORMATION DISPLAY
0922-301A
[BLACK]
INSTRUMENT PANEL HARNESS-CLOCK SPRING
0922-201
J-08
PJB
(REFER TO 00J SECTION)
[BLUE]
J-03
PJB
(REFER TO 00J SECTION)
: FRONT HARNESS
: ENGINE HARNESS
: INSTRUMENT PANEL HARNESS

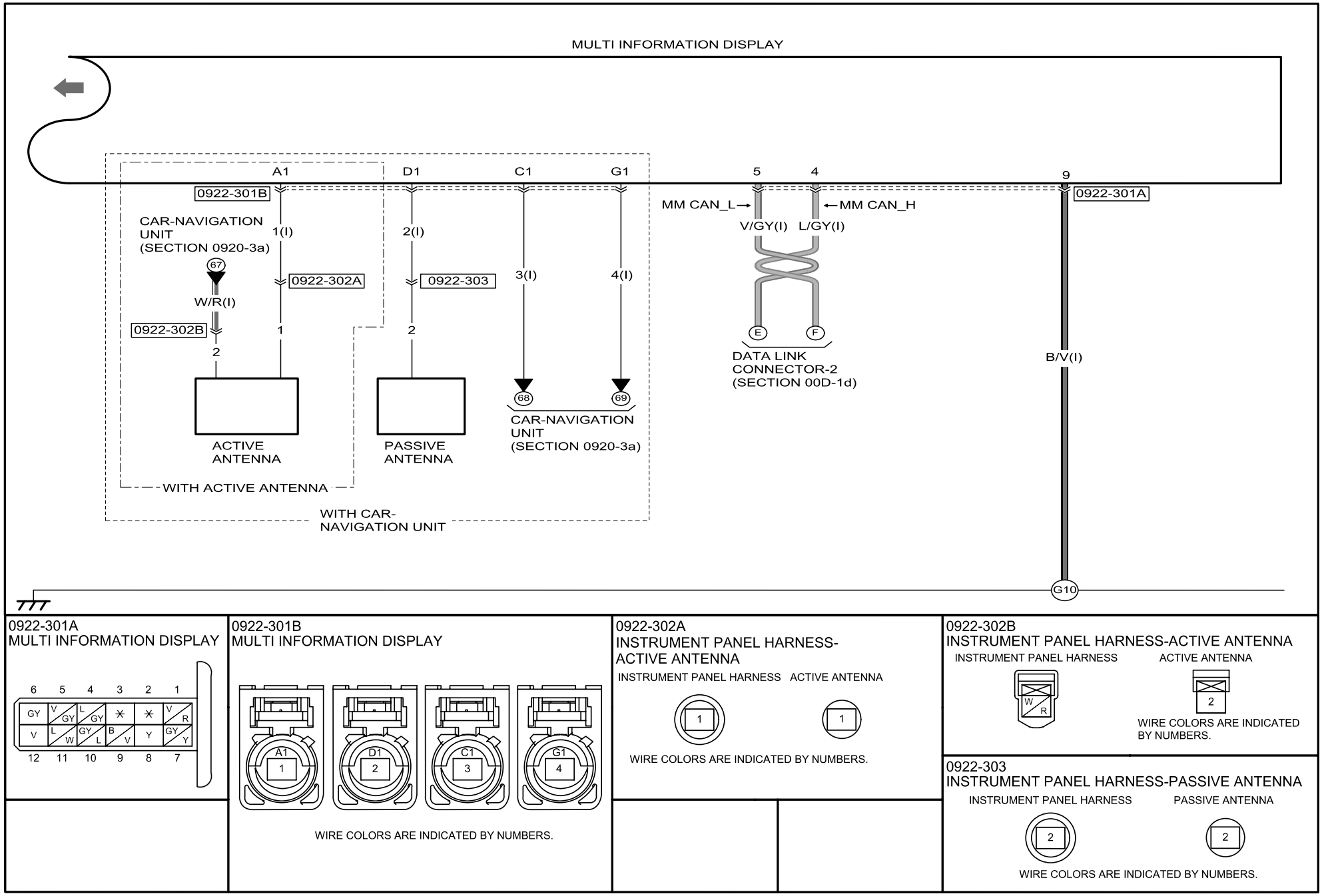
MULTI INFORMATION DISPLAY
A1
D1
C1
G1
5
4
9
0922-301B
0922-301A
MM CAN_L
MM CAN_H
V/GY(I)
L/GY(I)
CAR-NAVIGATION UNIT (SECTION 0920-3a)
1(I)
2(I)
3(I)
4(I)
67
0922-302A
0922-303
W/R(I)
0922-302B
1
2
2
E
F
DATA LINK CONNECTOR-2 (SECTION 00D-1d)
B/V(I)
68
69
CAR-NAVIGATION UNIT (SECTION 0920-3a)
ACTIVE ANTENNA
PASSIVE ANTENNA
WITH ACTIVE ANTENNA
WITH CAR-NAVIGATION UNIT
G10
0922-301A
MULTI INFORMATION DISPLAY
6 5 4 3 2 1
GY V/GY L/GY * * V/R
V L/W GY/L B/V Y GY/Y
12 11 10 9 8 7
0922-301B
MULTI INFORMATION DISPLAY
A1 1
D1 2
C1 3
G1 4
WIRE COLORS ARE INDICATED BY NUMBERS.
0922-302A
INSTRUMENT PANEL HARNESS-ACTIVE ANTENNA
INSTRUMENT PANEL HARNESS
ACTIVE ANTENNA
1
1
WIRE COLORS ARE INDICATED BY NUMBERS.
0922-302B
INSTRUMENT PANEL HARNESS-ACTIVE ANTENNA
INSTRUMENT PANEL HARNESS
ACTIVE ANTENNA
W/R
2
WIRE COLORS ARE INDICATED BY NUMBERS.
0922-303
INSTRUMENT PANEL HARNESS-PASSIVE ANTENNA
INSTRUMENT PANEL HARNESS
PASSIVE ANTENNA
2
2
WIRE COLORS ARE INDICATED BY NUMBERS.

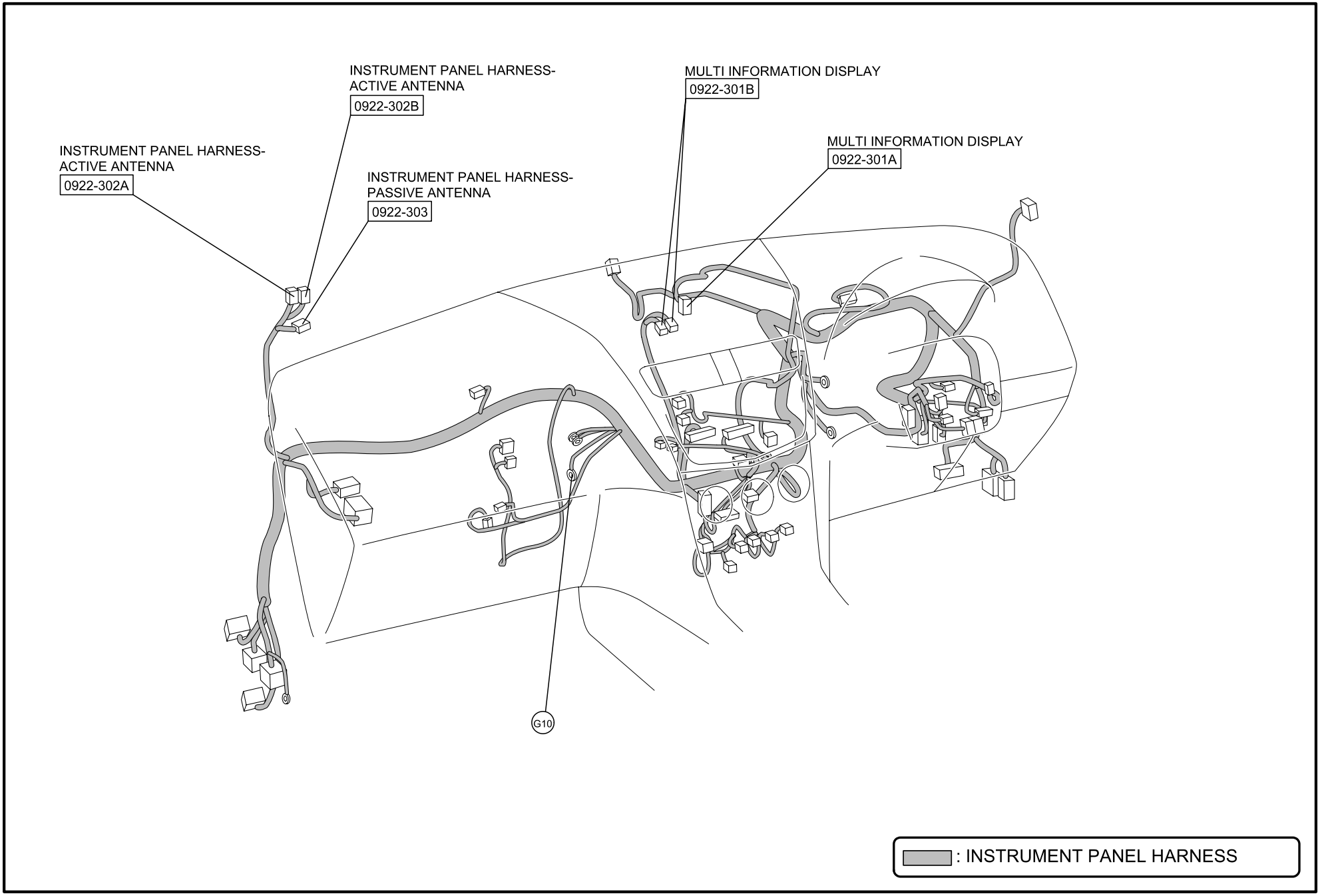
INSTRUMENT PANEL HARNESS-
ACTIVE ANTENNA
0922-302B
MULTI INFORMATION DISPLAY
0922-301B
INSTRUMENT PANEL HARNESS-
ACTIVE ANTENNA
0922-302A
MULTI INFORMATION DISPLAY
0922-301A
INSTRUMENT PANEL HARNESS-
PASSIVE ANTENNA
0922-303
G10
: INSTRUMENT PANEL HARNESS

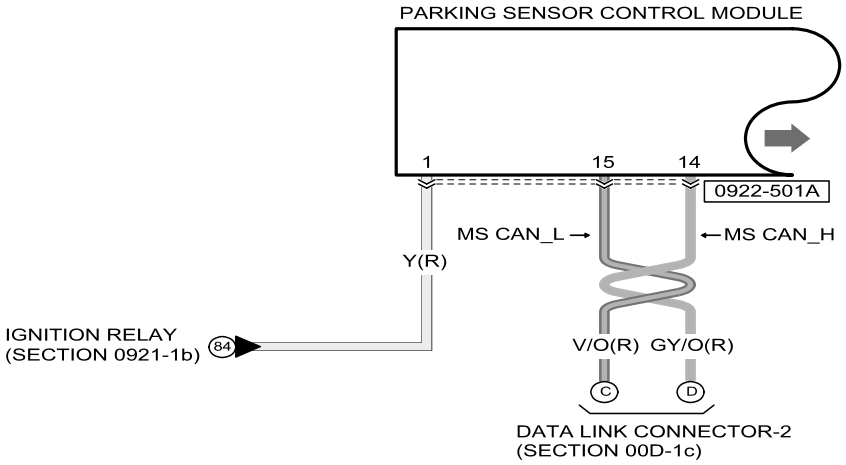

0922-501A
PARKING SENSOR CONTROL MODULE

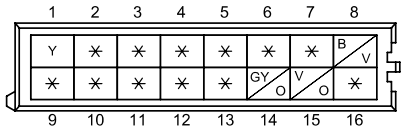

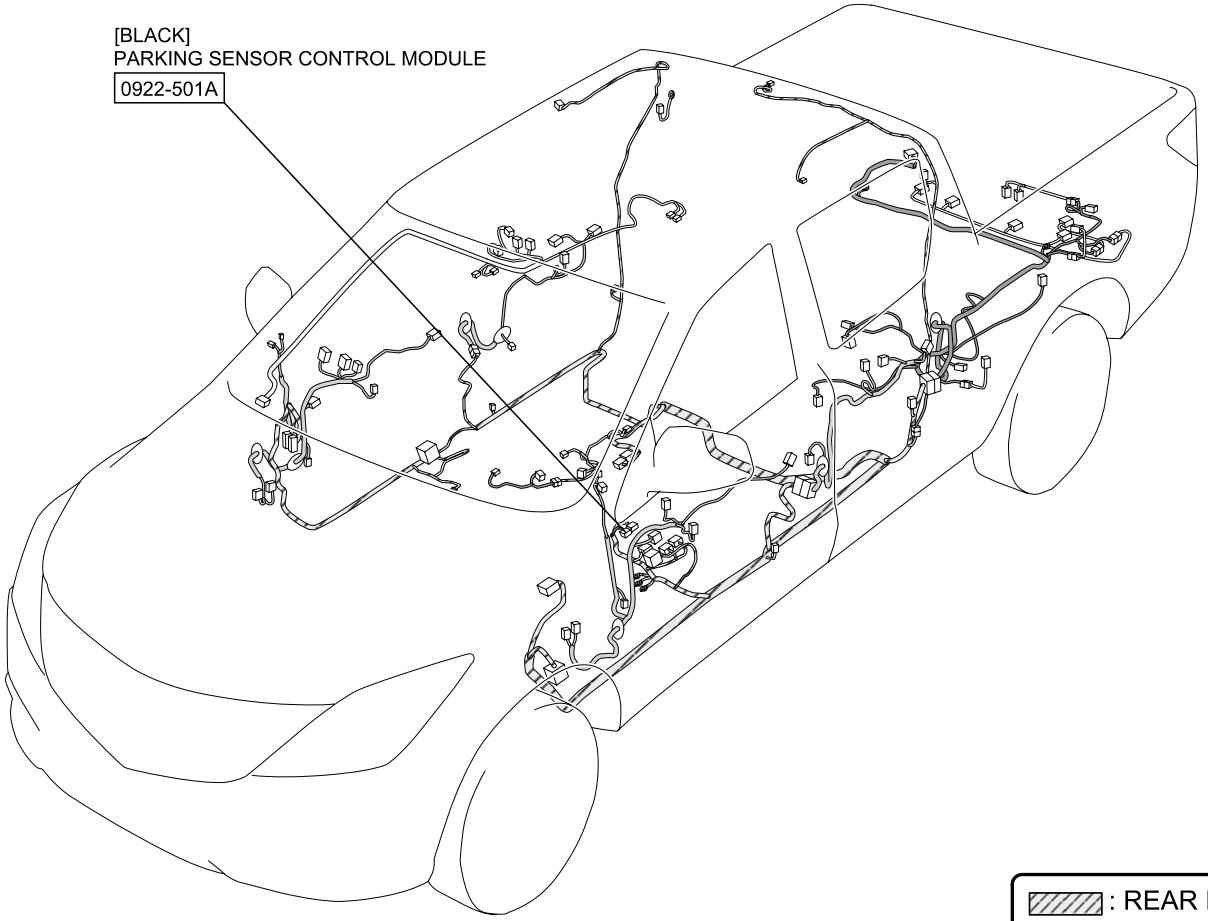

: REAR HARNESS
: REAR NO.2 HARNESS
REAR NO.3 HARNESS
: DOOR HARNESS
: INTERIOR LIGHT HARNESS

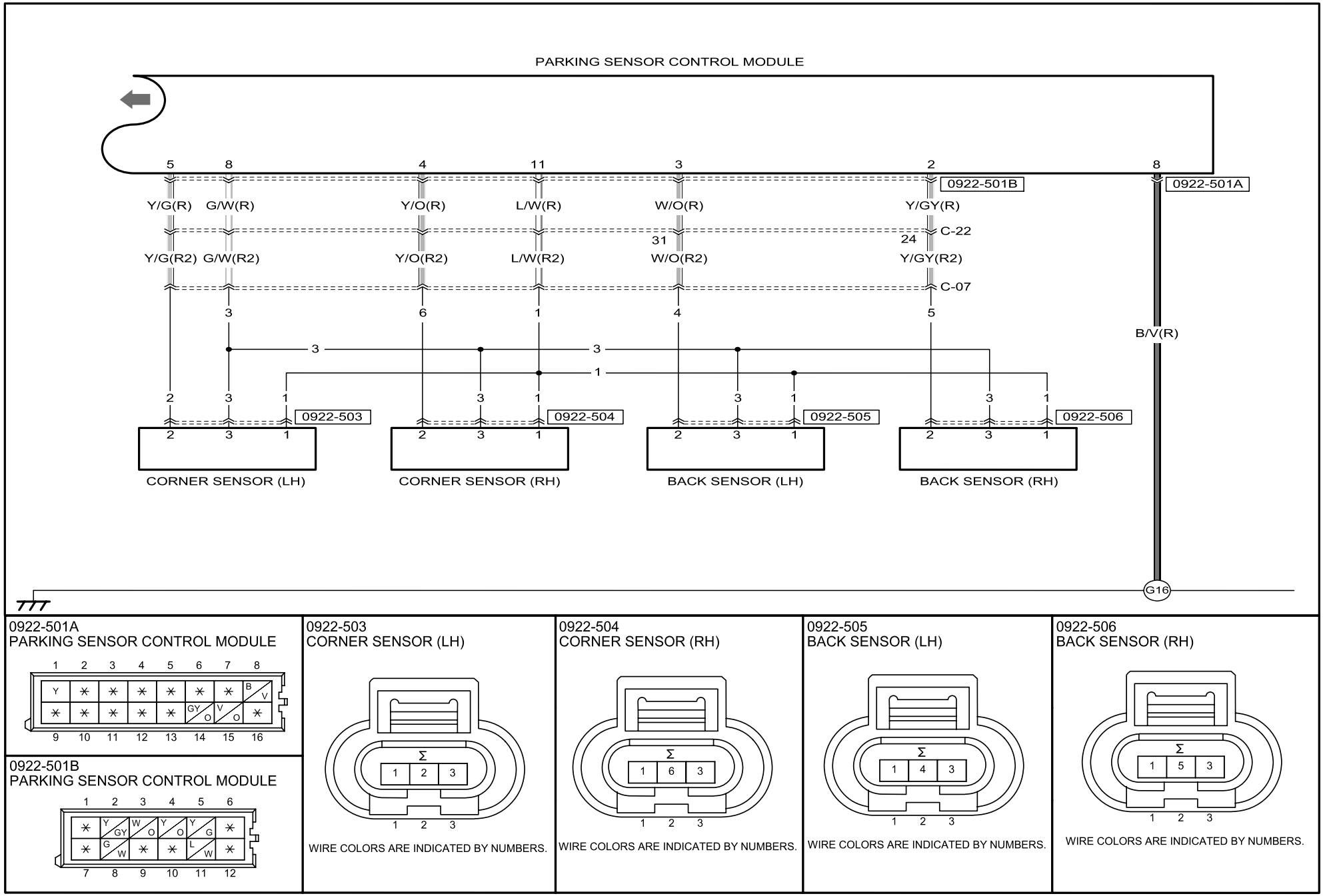
PARKING SENSOR CONTROL MODULE
5
8
4
11
3
2
8
0922-501B
0922-501A
Y/G(R)
G/W(R)
Y/O(R)
L/W(R)
W/O(R)
Y/GY(R)
C-22
31
24
Y/G(R2)
G/W(R2)
Y/O(R2)
L/W(R2)
W/O(R2)
Y/GY(R2)
C-07
3
6
1
4
5
B/V(R)
3
3
1
2
3
1
3
1
3
1
3
1
0922-503
0922-504
0922-505
0922-506
2
3
1
CORNER SENSOR (LH)
CORNER SENSOR (RH)
BACK SENSOR (LH)
BACK SENSOR (RH)
G16
0922-501A
PARKING SENSOR CONTROL MODULE
0922-501B
PARKING SENSOR CONTROL MODULE
0922-503
CORNER SENSOR (LH)
WIRE COLORS ARE INDICATED BY NUMBERS.
0922-504
CORNER SENSOR (RH)
WIRE COLORS ARE INDICATED BY NUMBERS.
0922-505
BACK SENSOR (LH)
WIRE COLORS ARE INDICATED BY NUMBERS.
0922-506
BACK SENSOR (RH)
WIRE COLORS ARE INDICATED BY NUMBERS.

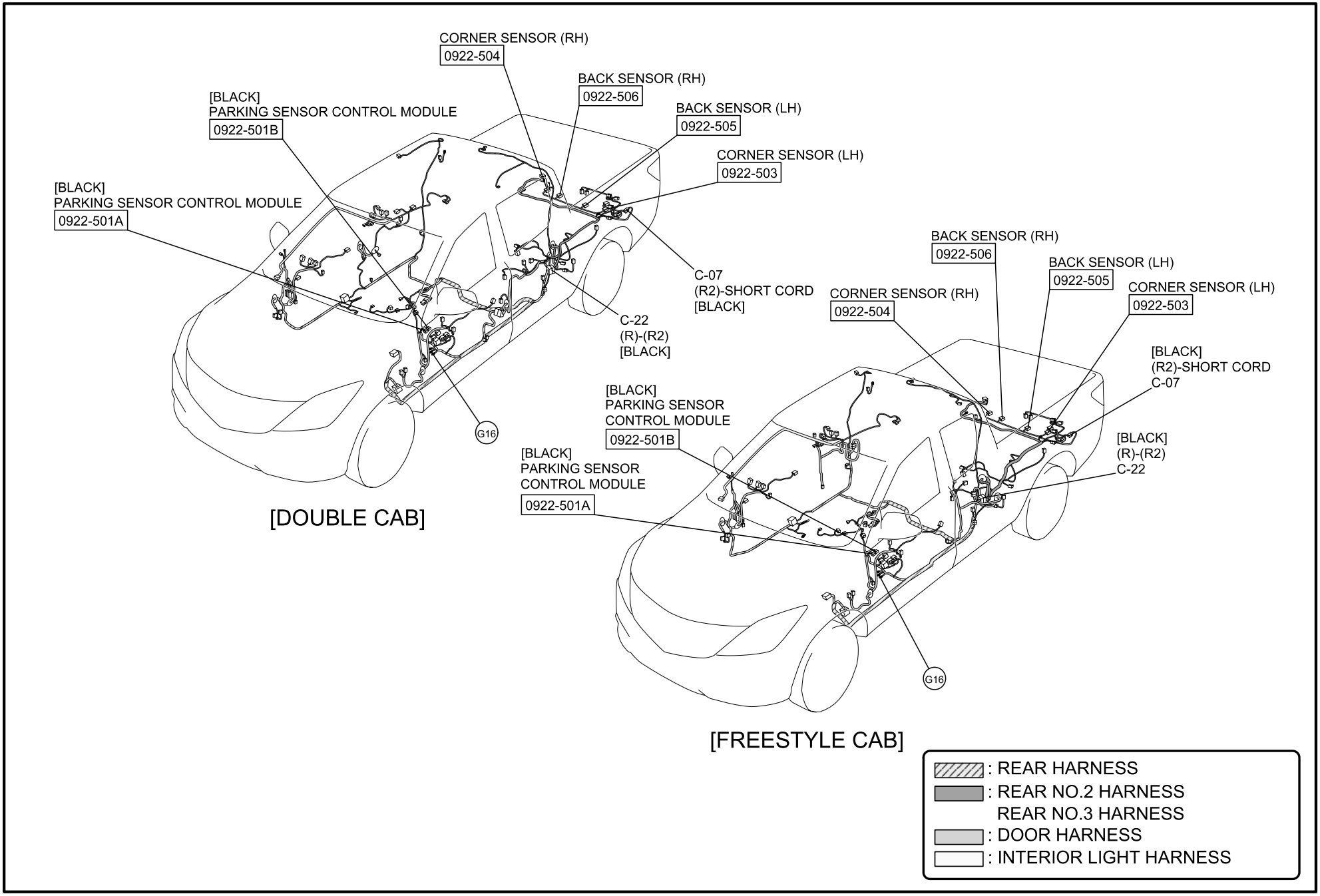
CORNER SENSOR (RH)
0922-504
BACK SENSOR (RH)
0922-506
BACK SENSOR (LH)
0922-505
CORNER SENSOR (LH)
0922-503
[BLACK]
PARKING SENSOR CONTROL MODULE
0922-501B
[BLACK]
PARKING SENSOR CONTROL MODULE
0922-501A
C-07
(R2)-SHORT CORD
[BLACK]
C-22
(R)-(R2)
[BLACK]
G16
[DOUBLE CAB]
BACK SENSOR (RH)
0922-506
BACK SENSOR (LH)
0922-505
CORNER SENSOR (RH)
0922-504
CORNER SENSOR (LH)
0922-503
[BLACK]
(R2)-SHORT CORD
C-07
[BLACK]
PARKING SENSOR
CONTROL MODULE
0922-501B
[BLACK]
(R)-(R2)
C-22
[BLACK]
PARKING SENSOR
CONTROL MODULE
0922-501A
G16
[FREESTYLE CAB]
: REAR HARNESS
: REAR NO.2 HARNESS
REAR NO.3 HARNESS
: DOOR HARNESS
: INTERIOR LIGHT HARNESS

ALPHABETICAL INDEX

ALPHABETICAL INDEX

ALPHABETICAL INDEX