Official

HONDA

SHOP MANUAL

V45 SABRE-VF750S
V45 MAGNA-VF750C

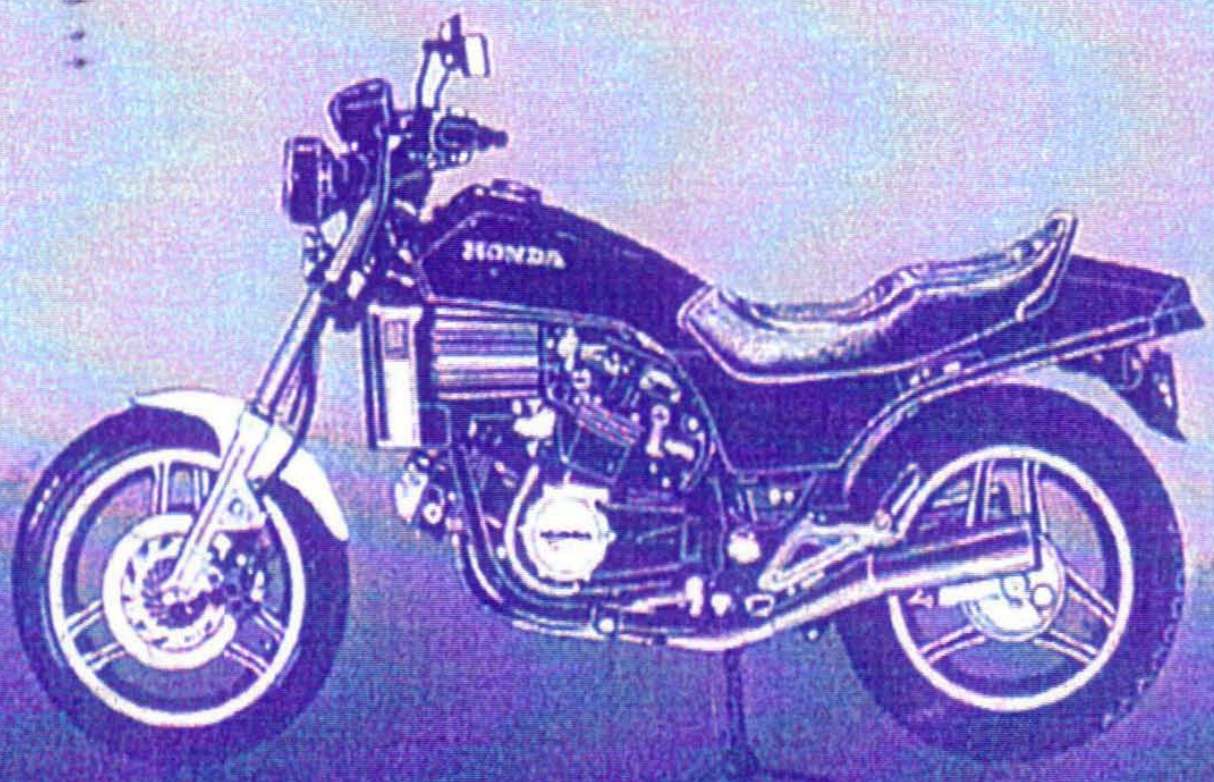

'82~'83

61MB001
KSV A35008210D

MODEL IDENTIFICATION

V45 SABRE
BEGINNING F NO. RC070 * CM000001
E NO. RC07E–2000001

V45 MAGNA
BEGINNING F NO. RC071 * CM000001
E NO. RC07E–4000001

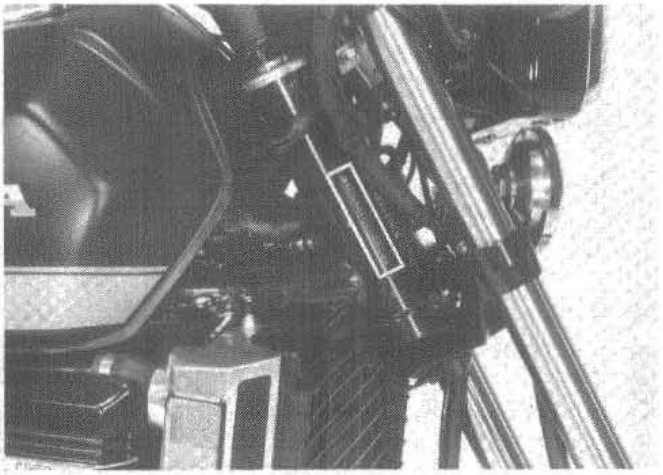

The frame serial number is stamped on the steering head right side.

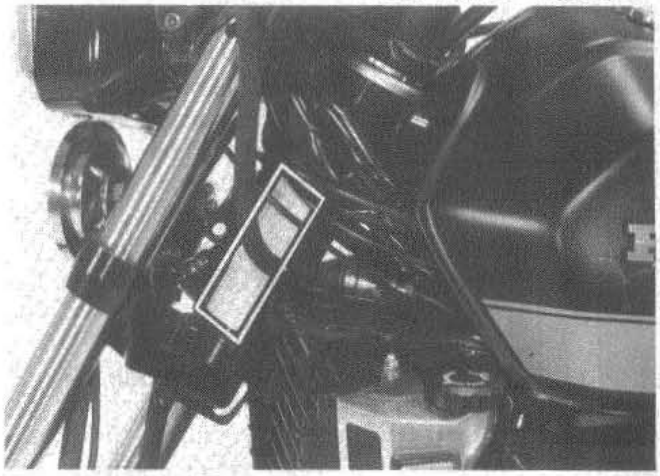

The vehicle identification number (VIN) is on the steering head left side.

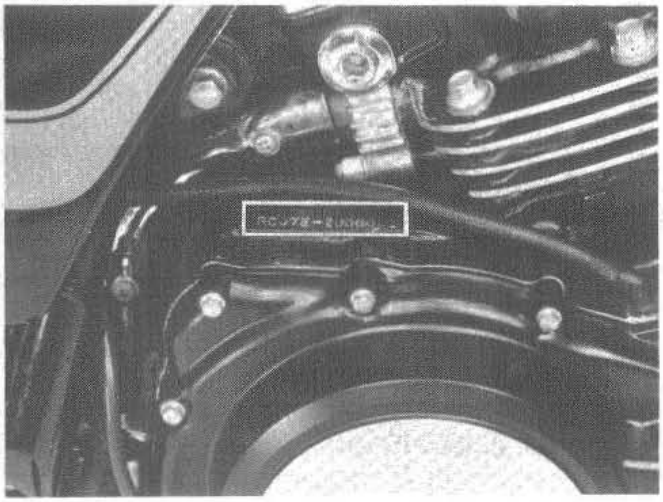

The engine serial number is stamped on top of the right crankcase.

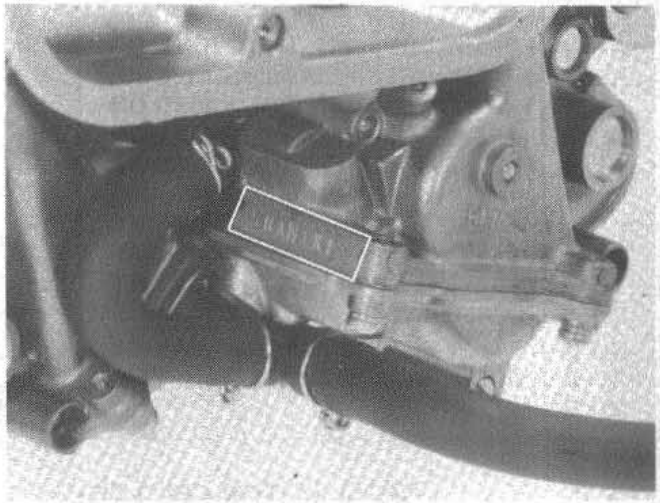

The carburetor identification number is on the carburetor body left side.

Date of Issue: May, 1982

1. GENERAL INFORMATION

GENERAL SAFETY

WARNING

If the engine must be running to do some work, make sure the area is well-ventilated. Never run the engine in a closed area. The exhaust contains poisonous carbon monoxide gas.

WARNING

Gasoline is extremely flammable and is explosive under certain conditions. Do not smoke or allow flames or sparks in your working area.

WARNING

The battery electrolyte contains sulfuric acid. Protect your eyes, skin and clothing. In case of contact, flush thoroughly with water and call a doctor if electrolyte gets in your eyes.

WARNING

The battery generates hydrogen gas which can be highly explosive. Do not smoke or allow flames or sparks near the battery, especially while charging it.

SERVICE RULES

1. Use genuine HONDA or HONDA-recommended parts and lubricants or their equivalent. Parts that do not meet HONDA's design specifications may damage the motorcycle.
2. Use the special tools designed for this product.
3. Use only metric tools when servicing this motorcycle. Metric bolts, nuts, and screws are not interchangeable with English fasteners. The use of incorrect tools and fasteners may damage the motorcycle.
4. Install new gaskets, O-rings, cotter pins, lock plates, etc. when reassembling.
5. When tightening bolts or nuts, begin with larger-diameter or inner bolts first, and tighten to the specified torque diagonally, unless a particular sequence is specified.
6. Clean parts in cleaning solvent upon disassembly. Lubricate any sliding surfaces before reassembly.
7. After reassembly, check all parts for proper installation and operation.

SPECIFICATIONS

ITEM			V45 SABRE	V45 MAGNA
DIMENSIONS	Overall length		2,245 mm (88.4 in)	2,190 mm (86.2 in)
	Overall width		830 mm (32.7 in)	815 mm (32.1 in)
	Overall height		1,165 mm (45.9 in)	1,195 mm (47.0 in)
	Wheelbase		1,562 mm (61.5 in)	1,540 mm (60.6 in)
	Seat height		780 mm (30.7 in)	760 mm (29.9 in)
	Foot peg height		320 mm (12.6 in)	←
	Ground clearance		135 mm (5.3 in)	165 mm (6.5 in)
	Dry weight		224 kg (494 lb)	219 kg (483 lb)
	Curb weight		242 kg (534 lb)	236 kg (520 lb)
FRAME	Type		Double cradle	←
	Front suspension, travel		Telescopic fork 140 mm (5.5 in)	←
	Rear suspension, travel		Swingarm/Shock absorber, 106 mm (4.2 in)	Swingarm/Shock absorber, 100 mm (3.9 in)
	Gross vehicle weight rating		431 kg (950 lb)	404 kg (890 lb)
	Vehicle capacity load		190 kg (419 lb)	168 kg (370 lb)
	Front tire size		110/90-H18 Tubeless	←
	Rear tire size		130/90-H17 Tubeless	130/90-H16 Tubeless
	Cold tire pressures	Up to 90 kg (200 lbs) load, Front	32 psi (225 kPa, 2.25 kg/cm²)	←
		Up to 90 kg (200 lbs) load, Rear	32 psi (225 kPa, 2.25 kg/cm²)	←
		Up to vehicle capacity load, Front	32 psi (225 kPa, 2.25 kg/cm²)	←
		Up to vehicle capacity load, Rear	40 psi (280 kPa, 2.80 kg/cm²)	←
	Front brake, lining swept area		Double disc 904 cm² (140.1 sq in)	←
	Rear brake, lining swept area		Drum 201 cm² (31.2 sq in)	←
	Fuel capacity		18 liters (4.8 US gal, 3.96 Imp gal)	14 liters (3.7 US gal, 3.1 Imp gal)
	Fuel reserve capacity		4 liters (1.1 US gal, 0.9 Imp gal)	4 liters (1.1 US gal, 0.9 Imp gal)
	Caster angle		60°30'	60°
	Trail		117 mm (4.6 in)	105 mm (4.1 in)
	Front fork oil capacity		R: 375 cc (12.7 oz), L: 390 cc (13.2 oz)	R: 390 cc (13.2 oz), L: 405 cc (13.7 oz)
ENGINE	Type		Water cooled 4-stroke, DOHC engine	←
	Cylinder arrangement		4 cylinders 90° V	←
	Bore and stroke		70 x 48.6 mm (2.76 x 1.91 in)	←
	Displacement		748 cm³ (45.6 cu in)	←
	Compression ratio		10.5 : 1	←
	Valve train		Silent, multi-link chain drive and OHC with rocker arms	←
	Maximum horsepower		78 BHP/9,500 rpm	←
	Maximum torque		6.39 kg-m (46.2 ft-lb)/8,000 rpm	←
	Oil capacity		3.0 liters (3.2 US qt, 2.6 Imp qt) after disassembly	←
			2.9 liters (3.1 US qt, 2.5 Imp qt) after draining	←
	Coolant capacity		2.8 liters (2.9 US qt, 2.4 Imp qt)	2.9 liters (3.1 US qt, 2.5 Imp qt)
	Lubrication system		Forced pressure and wet sump	←
	Air filtration		Urethane foam	Paper filter
	Cylinder compression		13 ± 2 kg/cm² (184 ± 28 psi)	←
	Intake valve	Opens	5° (BTDC) at 1 mm lift	49° (BTDC) at 0 lift
		Closes	40° (ABDC) at 1 mm lift	110° (ABDC) at 0 lift
	Exhaust valve	Opens	40° (BBDC) at 1 mm lift	84° (BBDC) at 0 lift
		Closes	5° (ATDC) at 1 mm lift	84° (ATDC) at 0 lift
	Valve clearance	(Cold)	IN: / EX: 0.12 mm (0.005 in)	←
	Engine weight		84.7 kg (186.7 lb)	←
	Idle speed		1,000 ± 100 rpm	←

Date of Issue: October, 1982

ITEM		V45 SABRE	V45 MAGNA
ENGINE	Cylinder numbering	No. 1 – Left rear No. 2 – Left front No. 3 – Right rear No. 4 – Right front	← ← ← ←
CARBURETION	Carburetor type	32 mm (1.26 in)	←
	Identification number	VD32	←
	Pilot screw initial setting	See page 4-18	←
	Float level	8.3 mm (0.33 in)	7.2 mm (0.28 in)
DRIVE TRAIN	Clutch	Wet, multi-plate	←
	Transmission	5-speed with over drive	←
	Primary reduction	1.737	←
	Secondary reduction	1.188	←
	Final reduction	3.400	3.182
	Gear ratio I	2.294	←
	Gear ratio II	1.619	←
	Gear ratio III	1.292	←
	Gear ratio IV	1.074	←
	Gear ratio V	0.897	←
	Over drive	0.750	←
	Gear shift pattern	Left foot operated return system, 1–N–2–3–4–5–OD	←
	Final drive gear oil capacity	150 cc (5.1 oz) after disassembly 110 cc (3.7 oz) after draining	← ←
ELECTRICAL	Ignition	Full transistor ignition	←
	Ignition timing "F" mark	10° BTDC at idle	←
	Full advance	37° BTDC at 3,300 rpm	←
	Starting system	Starting motor	←
	Alternator	300W/5,000 rpm	←
	Battery capacity	12V–14 AH	←
	Spark plug	NGK	ND
	Standard	DPR 8EA-9	X24EPR-U9
	For cold climate (Below 5°C, 41°F)	DPR 7EA-9	X22EPR-U9
	For extended high speed riding	DPR 9EA-9	X27EPR-U9
	Spark plug gap	0.8–0.9 mm (0.031–0.035 in)	←
	Firing order	1–2–3–4	←
	Fuse/Main fuse	15A/30A	←
LIGHTS	Headlight (high/low beam)	65/45W	←
	Tail/stoplight	8/27W 3/32 cp SAE NO. 1157	←
	Front turn signal/running light	23/8W 32/3 cp SAE NO. 1034	←
	Rear turn signal	23W 32 cp SAE NO. 1073	←
	Instrument lights	3.4W x 3	3.4W 2 cp.
	Neutral indicator	3W	←
	Turn signal indicator	3W	←
	High beam indicator	3W	←
	Position light	8W x 2 3 cp x 2 SAE NO. 1034	←

TORQUE VALUES

- ENGINE

Item	Q'ty	Thread Dia. (mm)	Torque N·m (kg-m, ft-lb)	Remarks
Cylinder head cover	8	6	8–12 (0.8–1.2, 5.8–9.0)	
Cam holder	16	6	10–14 (1.0–1.4, 7–10)	
Cylinder head	8	8	21–25 (2.1–2.5, 15–18)	
	16	9	33–37 (3.3–3.7, 24–27)	
Alternator	1	12	80–100 (8.0–10.0, 58–72)	
Staring clutch	1	12	80–100 (8.0–10.0, 58–72)	Apply LOCTITE® 271 to the threads.
Clutch center	1	24	47–53 (4.7–5.3, 34–38)	
Crankcase	14	9	30–34 (3.0–3.4, 22–25)	UBS
	3	8	21–25 (2.0–2.5, 15–18)	
	14	6	10–14 (1.0–1.4, 7–10)	
Rocker arm shaft	8	22	45–50 (4.5–5.0, 33–36)	Socket bolts.
Cam sprocket	8	7	18–20 (1.8–2.0, 13–14)	
Starter clutch	1	8	26–30 (2.6–3.0, 19–22)	Apply LOCTITE® 271 to the threads.
Shift fork center	1	7	16–20 (1.6–2.0, 12–14)	
Cam chain guide A	1	12	20–25 (2.0–2.5, 14–18)	Apply LOCTITE® 271 to the threads.
Oil filter	1	20	15–20 (1.5–2.0, 11–14)	
Out put gear case	2	8	21–25 (2.0–2.5, 15–18)	Socket bolts.
	3	8	30–34 (3.0–3.4, 22–25)	
Valve adjustment nuts	16	7	21–25 (2.1–2.5, 15–18)	
Drain bolt	1	12	35–40 (3.5–4.0, 25–29)	
Connecting rod nuts	8	8	30–34 (3.0–3.4, 22–25)	
Drum stopper pivot shaft	1	6	8–12 (0.8–1.2, 5.8–9.0)	

- CHASSIS

Item	Q'ty	Thread Dia. (mm)	Torque N·m (kg-m, ft-lb)	Remarks
Handlebar upper holder (V45 MAGNA)	4	8	20–30 (2.0–3.0, 14–22)	
Handlebar pinch bolts (V45 VABRE)	2	8	45–50 (4.5–5.0, 33–36)	
Caliper mounting bolt	4	10	30–40 (3.0–4.0, 22–29)	
Front axle	1	12	55–65 (5.5–6.5, 40–47)	
Axle holder nuts (V45 SABRE)	2	8	18–25 (1.8–2.5, 13–18)	
Axle pinch bolt (V45 MAGNA)	1	8	15–25 (1.5–2.5, 11–18)	
Front fork socket bolts	2	8	15–25 (1.5–2.5, 11–18)	
Fork tube caps	2	31	15–30 (1.5–3.0, 11–22)	
Steering bearing adjustment nut	1	26	14–16 (1.4–1.6, 10–12)	
Steering stem nut	1	24	80–120 (8.0–12.0, 58–87)	
Front fork top pinch bolts	2	7	9–13 (0.9–1.3, 7–9)	
Front fork bottom pinch bolts	2	10	45–55 (4.5–5.5, 33–40)	

Date of Issue: May, 1982

Item	Q'ty	Thread Dia (mm)	Torque N·m (kg-m, ft-lb)	Remarks
Rear axle nut	1	16	60–80 (6.0–8.0, 43–58)	
Axle pinch bolt	1	8	20–30 (2.0–3.0, 14–22)	
Brake arm	1	8	24–30 (2.4–3.0, 17–22)	
Shock absorber mount bolts (V45 SABRE)	2	10	38–48 (3.8–4.8, 28–35)	
nuts (V45 MAGNA)	4	10	30–40 (3.0–4.0, 22–29)	
Shock link-to-frame bolt (V45 SABRE)	2	10	60–70 (6.0–7.0, 43–51)	
Shock link-to-shock arm bolt (V45 SABRE)	1	10	60–70 (6.0–7.0, 43–51)	
Shock arm-to-swingarm bolt (V45 SABRE)	2	10	60–70 (6.0–7.0, 43–51)	
Swingarm left pivot bolt	1	35	90–120 (9.0–12.0, 65–87)	
Swingarm right pivot bolt	1	35	16–20 (1.6–2.0, 12–14)	
Swingarm pivot lock nut	1	35	100–130 (10.0–13.0, 72–94)	
Front brake caliper bracket	2	10	30–40 (3.0–4.0, 22–29)	
Front brake caliper bolts	2	8	20–25 (2.0–2.5, 14–18)	
Front brake caliper pivot bolts	2	10	25–30 (2.5–3.0, 18–22)	
Brake hose bolts	5	10	25–35 (2.5–3.5, 18–25)	
Engine hanger bolts	2	8	20–30 (2.0–3.0, 14–22)	
	4	10	35–45 (3.5–4.5, 25–33)	
Final gear case nuts	3	10	45–70 (4.5–7.0, 33–51)	
Gear case cover bolts	2	10	35–45 (3.5–4.5, 25–33)	
	6	8	23–28 (2.3–2.8, 17–20)	
Exhaust pipe joint nuts	8	6	8–14 (0.8–1.4, 6–10)	
Muffler mount nuts	2	8	18–28 (1.8–2.8, 13–20)	
Exhaust chamber mount bolts	2	6	8–12 (0.8–1.2, 6–9)	
Exhaust pipe clamp bolts	2	8	18–28 (1.8–2.8, 13–20)	
Sub-frame bolts	2	8	20–30 (2.0–3.0, 14–22)	
(Upper)	2	10	70–80 (7.0–8.0, 51–58)	Socket bolt.
(Lower)	2	10	30–40 (3.0–4.0, 22–29)	Socket bolt.
Pinion nut	1	16	100–120 (10–12, 72–87)	

Torque specifications listed above are for important fasteners. Others should be tightened to standard torque valves listed on the next page.

- STANDARD TORQUE VALUES

Item	Torque Values N·m (kg·m, ft·lb)	Item	Torque Values N·m (kg·m, ft·lb)
5 mm bolt and nut	4–6 (0.4–0.6, 3–4)	5 mm screw	3–5 (0.3–0.5, 2–4)
6 mm bolt and nut	8–12 (0.8–1.2, 6–9)	6 mm screw	7–11 (0.7–1.1, 5–8)
8 mm bolt and nut	18–25 (1.8–2.5, 13–18)	6 mm flange bolt and nut	10–14 (1.0–1.4, 7–10)
10 mm bolt and nut	30–40 (3.0–4.0, 22–29)	8 mm flange bolt and nut	20–30 (2.0–3.0, 14–22)
12 mm bolt and nut	50–60 (5.0–6.0, 36–43)	10 mm flange bolt and nut	30–40 (3.0–4.0, 22–29)

Date of Issue: May, 1982

TOOLS

- SPECIAL

Description	Part No.	Remarks	Ref. Sect.
Carb. throttle adjusting bit	07908–MB00000	KS–AH–008–MBO (U.S.A only)	3
Lock nut wrench, 30/64 mm	07916–MB00000		13, 14
Final pinion holder	07924–MB00000	These tools are new and have not been used before.	14
Pinion puller, attachment kit	07931–MB00000		14
Shock absorber compressor attachment	07959–MB10000		17
Drive shaft dis/assembly tool (A) (Plate)	07964–MB00100		14
Drive shaft dis/assembly tool (B) (Collar)	07964–MB00200		15
Drive shaft dis/assembly tool (C)	07964–MB00300		14
Vacuum gauge	07404–0020000	or M937B–021–XXXXX (U.S.A. only)	3
Oil pressure gauge	07506–3000000	Commercially available in U.S.A.	2
Oil pressure gauge attachment	07510–4220100		2
Carburetor pilot screw wrench	07908–4220201		3
Swingarm lock nut wrench	07908–4690001	KS–HBA–08–469 (U.S.A. only)	17
Snap ring pliers	07914–3230001		7, 15, 16
Steering stem socket	07916–3710100		15
6 mm hex set wrench	07917–3230000	Commercially available in U.S.A.	15
Shaft holder	07923–6890101		13
Pinion puller	07931–4630200		14
Sliding hammer handle	07936–3710100		13
Sliding hammer weight	07936–3710200		13, 17
Bearing remover, 17 mm	07936–3710300		13, 17
Swingarm bearing remover	07936–4150000	Bearing remover, 30 mm 07936–8890300	17
Valve guide driver	07942–3290200	07742–0020200	10
Attachment	07945–3330100		14
Attachment	07945–3330300		13
Bearing race remover	07946–3710500		15
Steering stem driver	07946–3710601		15
Bearing race driver	07946–4300200		15
Fork seal driver	07947–3710101		15
Driver	07949–3710000		
Attachment	07947–6340201		14
Bearing race remover	07953–4250002		15
Piston ring compressor	07954–2830000	or equivalent.	12
Ring gear dis/assembly tool	07965–3710100		13
Valve guide driver	07942–8230000		
Valve guide reamer 5.5 mm	07984–2000000		10
Preload inspection tool	07998–4150000		13

Valve seat cutter, 29 mm (IN)	07780–0010300	Equivalent is commercially available in U.S.A.	10
Valve seat cutter, 24.5 mm (EX)	07780–0010100		
Valve seat flat cutter, 28 mm (IN)	07780–0012100		
Valve seat flat cutter, 25 mm (EX)	07780–0012000		
Valve seat interior cutter, 30 mm	07780–0014000		
Valve seat cutter holder, 5.5 mm	07781–0010100		

- COMMON

Description	Part No.	Alternate Tool	Part No.	Ref. Sect.
Float level gauge	07401–0010001			4
Hex bit 17 mm	07703–0020500	Equivalents are commercially available in U.S.A.		17
Oil pressure gauge	07506–3000000			2
Oil pressure gauge attachment	07510–4220100			2
Lock nut wrench, 10 x 12 mm	07708–0030100	Snap-on Tool wrench X0810 or equivalent available in U.S.A.		3
Adjusting wrench	07708–0030200			3
Lock nut wrench, 17 x 27 mm	07716–0020300	Equivalents are commercially available in U.S.A.		7
Lock nut wrench, 30 x 32 mm	07716–0020400			15
Extension bar	07716–0020500			7, 15
Universal holder	07725–0030000			7, 9
Rotor puller	07733–0020001	Rotor puller	07933–3290001	9
Valve guide remover, 5.5 mm	07742–0010100	Valve guide driver	07942–3290100	10
Attachment, 32 x 35 mm	07746–0010100			14
Attachment, 37 x 40 mm	07746–0010200			14, 17
Attachment, 42 x 47 mm	07746–0010300	Attachment	07945–3330100	7, 13, 14, 15, 17
Attachment, 52 x 55 mm	07746–0010400			13, 14, 15
Attachment, 62 x 68 mm	07746–0010500			13
Driver	07746–0030100	Driver	07945–3710200	13, 14
Attachment, 25 mm	07746–0030200			
Pilot, 15 mm	07746–0040300			15
Pilot, 17 mm	07746–0040400			13, 17
Pilot, 20 mm	07746–0040500			
Pilot, 25 mm	07746–0040600			
Pilot, 30 mm	07746–0040700			13, 14
Pilot, 35 mm	07746–0040800			7
Driver	07749–0010000	Driver	07949–6110000	
Valve spring compressor	07757–0010000			10
Rear shock absorber compressor	07959–3290001			14, 17

Date of Issue: October, 1982

V45 MAGNA
CABLE & HARNESS ROUTING

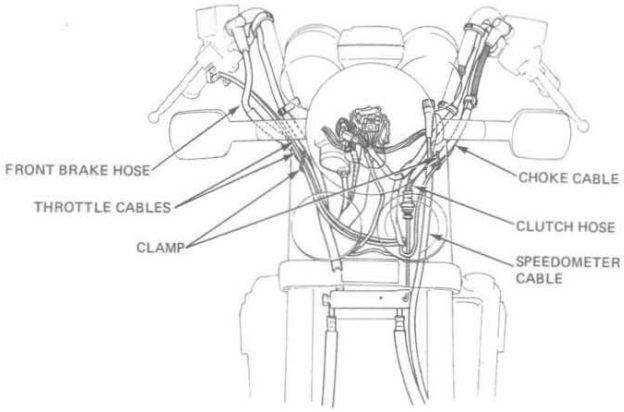

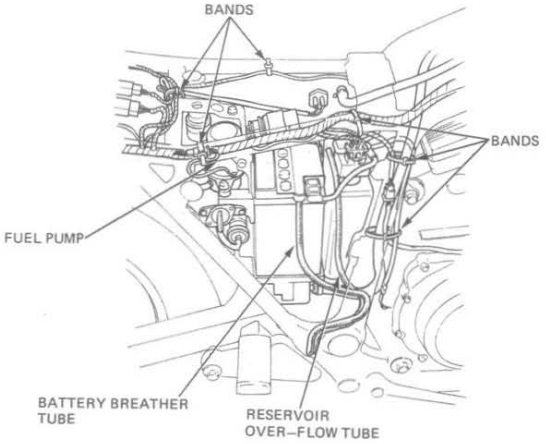

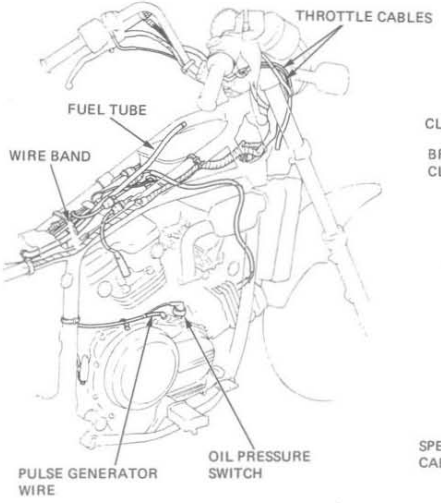

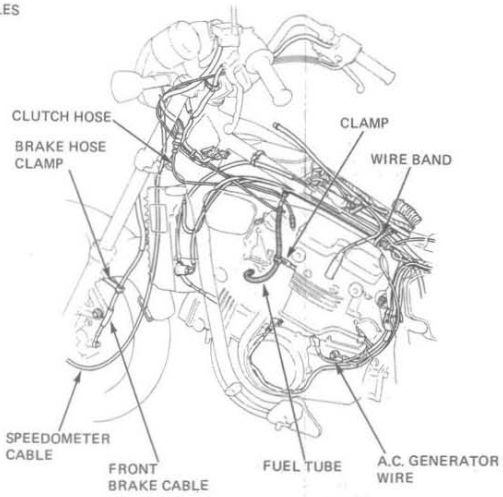

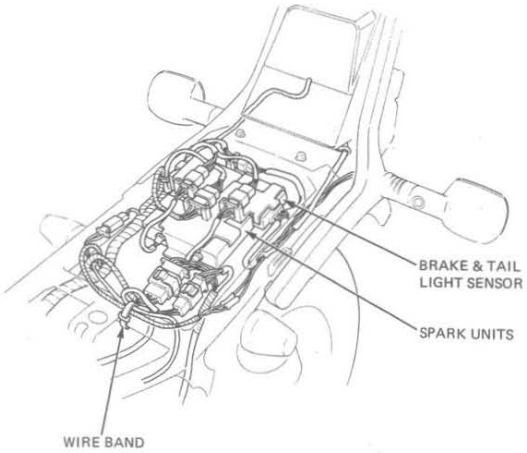

EMISSION CONTROL SYSTEM

The V45 engine is equipped with a crankcase emission control system which routes crankcase emissions through the air cleaner and into the combustion chamber. Condensed crankcace vapors are accumulated in a storage tank which must be emptied periodically. See the Maintenance Schedule in Section 3.

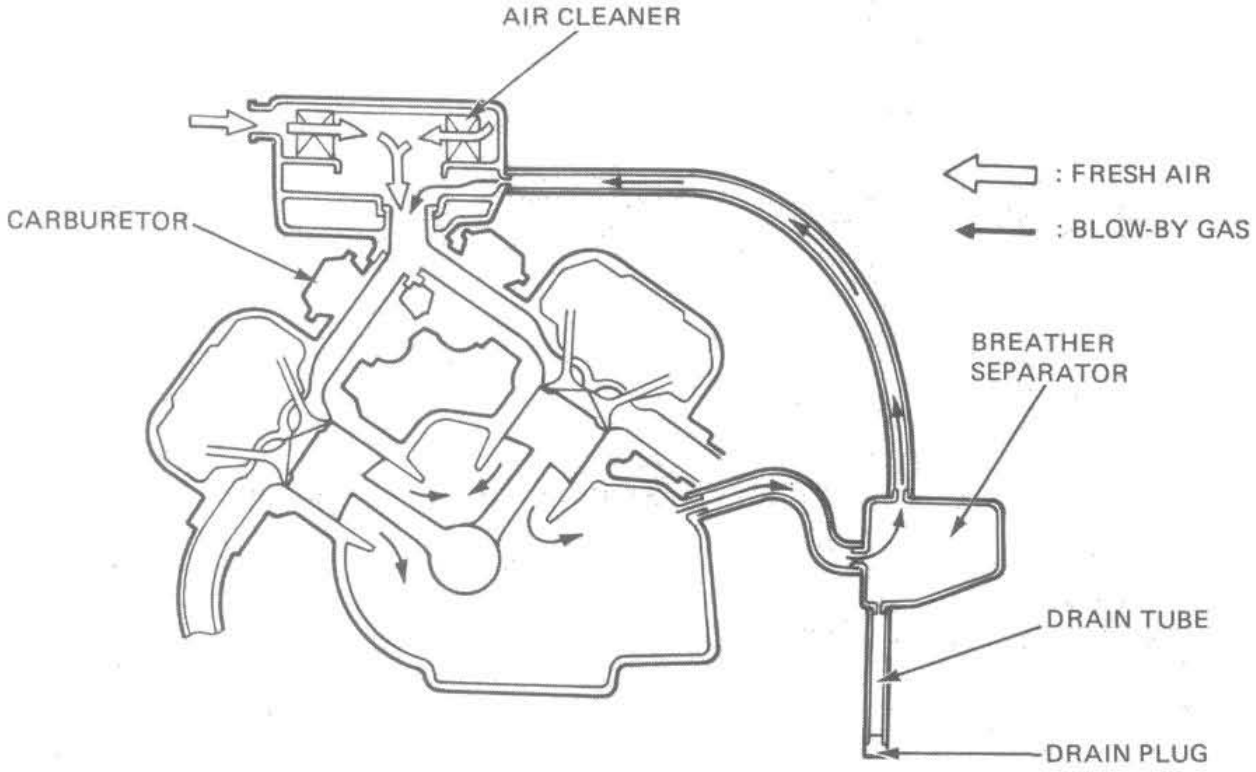

EMISSION CONTROL INFORMATION LABEL

An Emission Control Information Label is located on the frame as shown. It gives basic tune-up specifications.

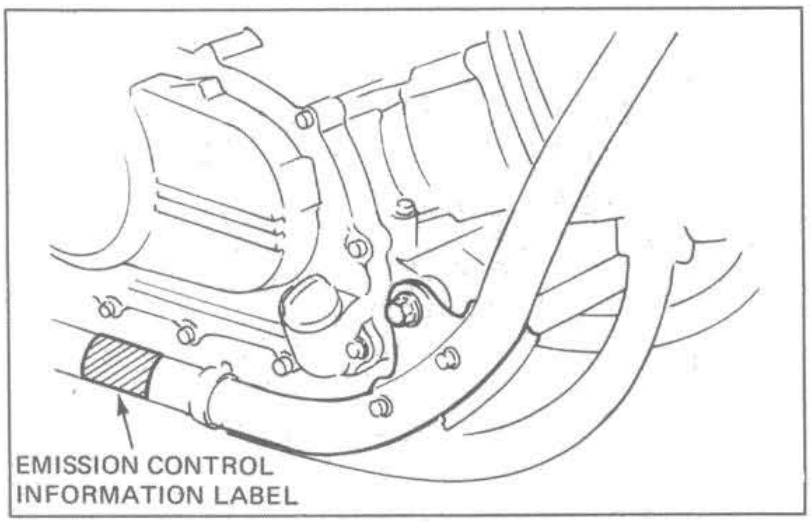

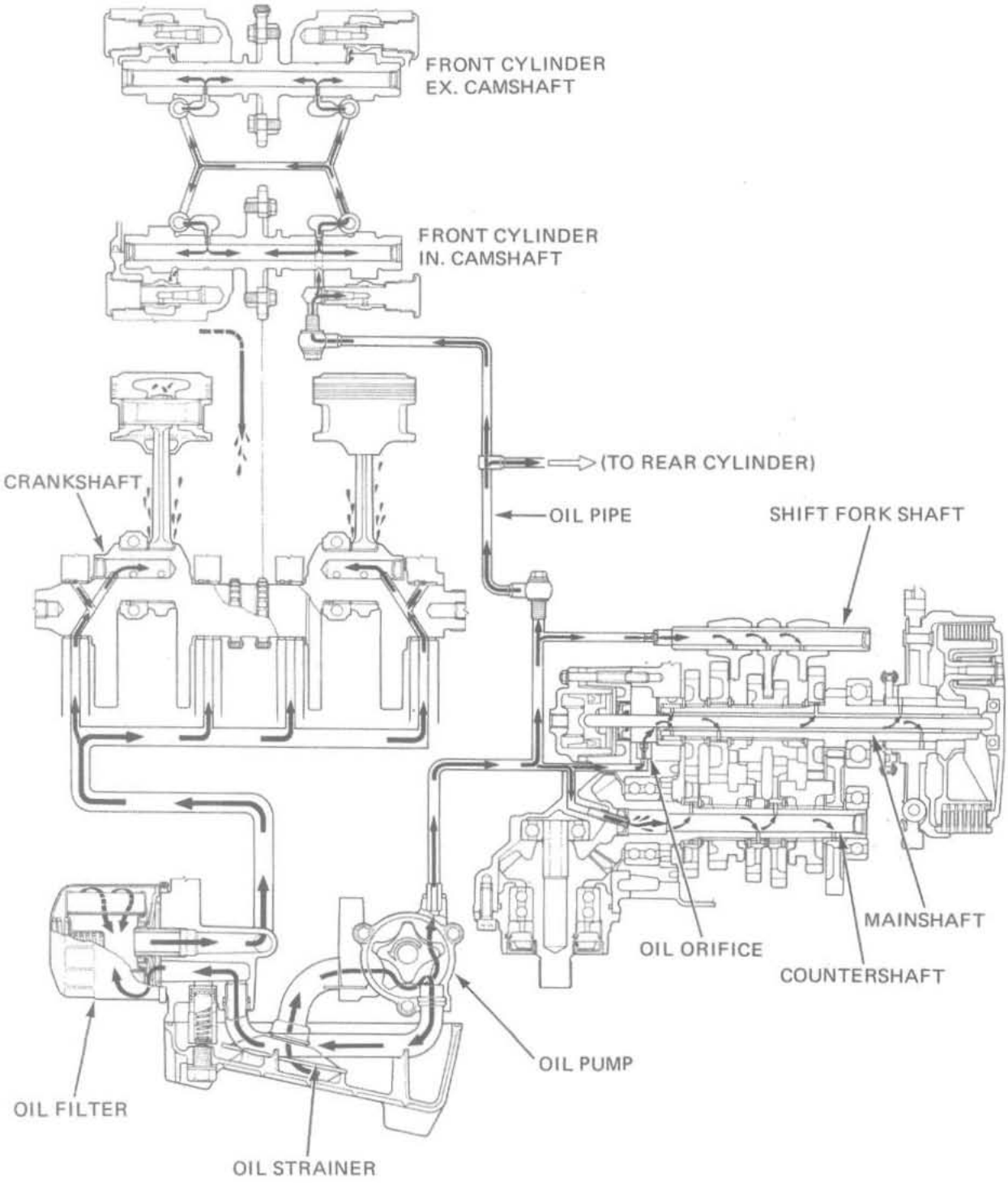

Date of Issue: May, 1982

2. LUBRICATION

SERVICE INFORMATION

GENERAL

To service the oil pump, it is necessary to remove the right side cover and water pump assembly. See section 6 for water pump removal and installation.

SPECIFICATIONS

Engine oil

Oil capacity	2.9 liter (3.1 US qt, 2.5 Imp qt) after draining 3.0 liter (3.2 US qt, 2.6 Imp qt) after disassembly
Oil recommendation	Use HONDA 4-STROKE OIL or equivalent. API SERVICE CLASSIFICATION: SE or SF. VISCOSITY: SAE 10W–40 Other viscosities shown in the chart may be used when the average temperature in your riding area is within the indicated range. OIL VISCOSITIES 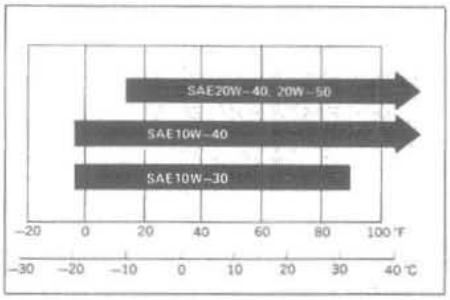
Oil pressure (at oil pressure switch)	4.5 ± 0.8 kg/cm² (64 ± 11 psi) at 5,000 rpm (80°C/176°F)
Oil pump delivery	4.1 liter (86.674 U.S. qt)/min. at 5,900 rpm

Oil pump service data

	STANDARD	SERVICE LIMIT
Rotor tip clearance	0.15 mm (0.006 in)	0.20 mm (0.008 in)
Pump body clearance	0.15–0.22 mm (0.006–0.009 in)	0.35 mm (0.014 in)
Pump end clearance	0.02–0.07 mm (0.001–0.003 in)	0.10 mm (0.004 in)

Final drive gear

Oil capacity	150 cc (5.1 oz.) after disassembly 110 cc (3.7 oz.) after draining
Recommended oil	Hypoid gear oil — Above 5°C/41°F SAE #90 Below 5°C/41°F SAE #80

TORQUE VALUES

Engine oil drain plug	35–40 N·m (3.5–4.0 kg-m, 25–29 ft-lb)	
Engine oil filter	15–20 N·m (1.5–2.0 kg-m, 11–14 ft-lb)	— Apply Loctite® to crankcase bolt threads.
Oil pressure switch	15–20 N·m (1.5–2.0 kg-m, 11–14 ft-lb)	— Apply 3-BOND® or its equivalent to the bolt threads.

TOOLS

Special

Oil pressure gauge	07506–3000000	or commercially available.
Oil pressure gauge attachment	07510–4220100	

TROUBLESHOOTING

Oil level too low
1. External oil leaks
2. Worn piston rings
3. Worn valve guide or seal

Oil contamination
1. Oil or filter not changed often enough
2. Head gasket fualty
3. Worn piston rings

Low oil pressure
1. Oil level low
2. Pressure relif valve stuck open
3. Plugged oil pick-up screen
4. Oil pump worn
5. External oil leaks

High oil pressure
1. Pressure relief valve stuck open
2. Plugged oil filter, gallery, or metering orifice
3. Incorrect oil being used

No oil pressure
1. Oil level low
2. Oil pump drive chian broken
3. Oil pump faulty
4. Internal oil leakage

Date of Issue: January, 1982

ENGINE OIL LEVEL

Check engine oil level before operating the motorcycle. Put the motorcycle on its center stand on level ground. Check the oil level at the engine oil inspection window on the right side cover.
Clean the oil inspection window on the right side cover with the wiper.

If the level is below the lower level mark on the inspection window, remove the filler cap and fill to the upper level mark.

Check the oil pressure with the warning indicator switch after the engine starts. The indicator should go off after one or two seconds.
If it does not, check the oil pump function and/or oil circuit.

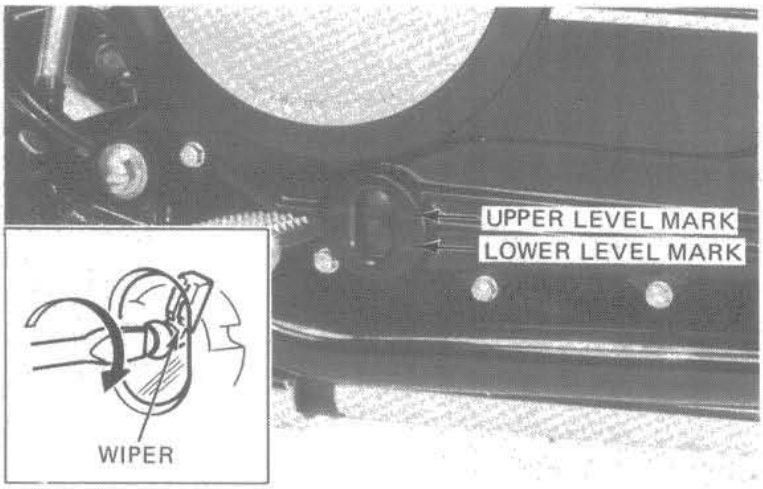

ENGINE OIL & FILTER CHANGE

NOTE:

> Change engine oil with the engine warm and the motorcycle on its center stand to assure complete and rapid draining.

Stop the engine.
Remove the oil filler cap, cylinder head oil drain plug, engine bottom oil drain plug and drain the oil.
Remove the oil filter with a filter wrench and let the remaining oil drain out. Discard the oil filter.

Make sure that the sealing washers on the drain plugs are in good condition and install the plugs.
After completely draining the oil replace the oil filter with a new one. Coat the oil filter seal with oil.
Fill the crankcase with 2.9 liters (3.1 US qt, 2.5 Imp qt) of the recommended oil (page 2-1).
Start the engine and let it idle for 2–3 minutes, then stop the engine.
Make sure that the oil level is at the upper level mark in the inspection window.
Make sure that there are no oil leaks.

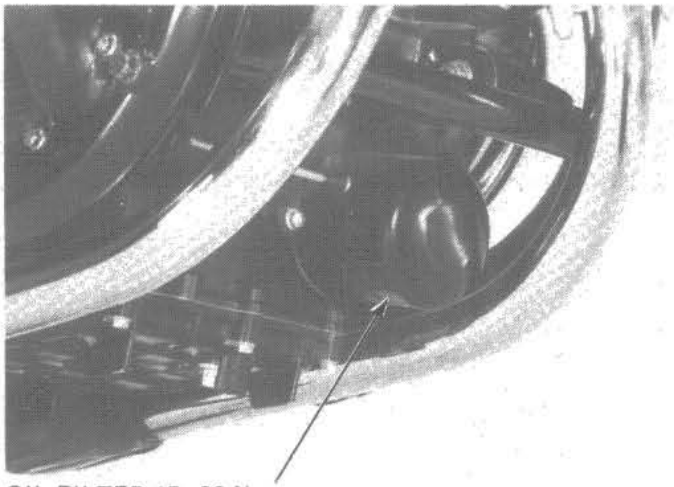

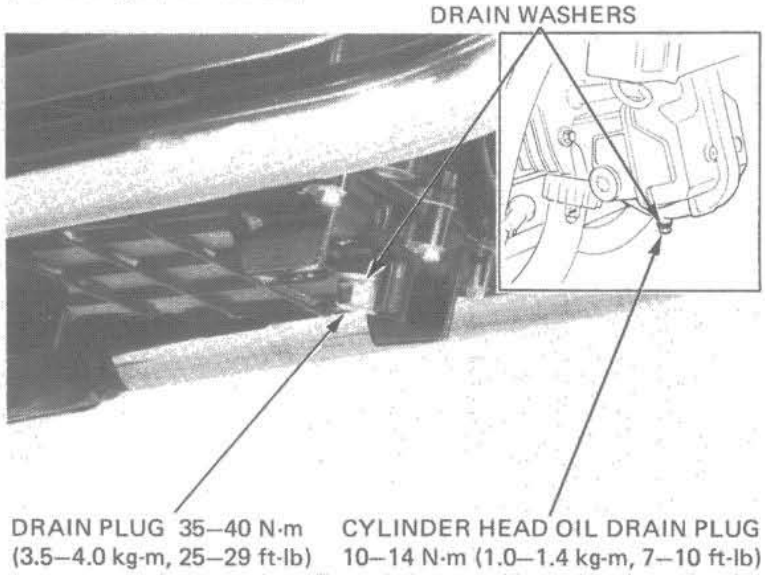

OIL STRAINER CLEANING

NOTE:

> The oil strainer can be removed with the engine mounted in the frame.

Remove the front exhaust pipes.

Drain the engine oil (page 2–3).

Remove the oil pan bolts and oil pan.

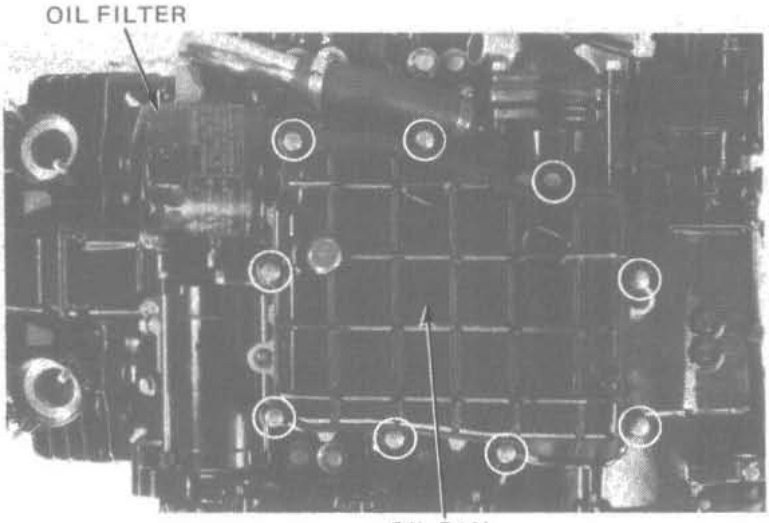

Remove and clean the oil strainer.
Check the operation of the pressure relief valve. Make sure the O-ring is in good condition whenever the relief valve is removed.
Install the oil strainer and oil pan.
Install the exhaust pipes.
Fill the crankcase with the recommended oil (page 2-1).

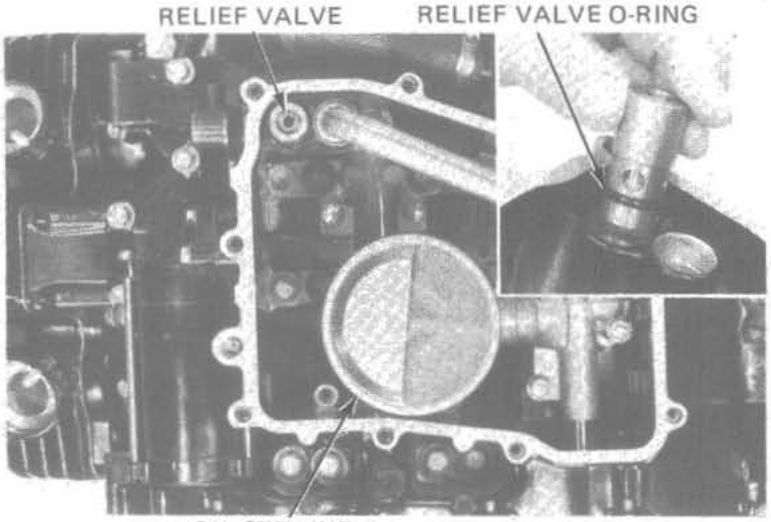

OIL PRESSURE CHECK

Warm the engine up to normal operating temperature (approximately 80°C/176°F).
Stop the engine and disconnect the oil pressure switch wire.
Remove the oil pressure switch and connect an oil pressure gauge to the pressure switch hole (page 2-5).
Check the oil level.

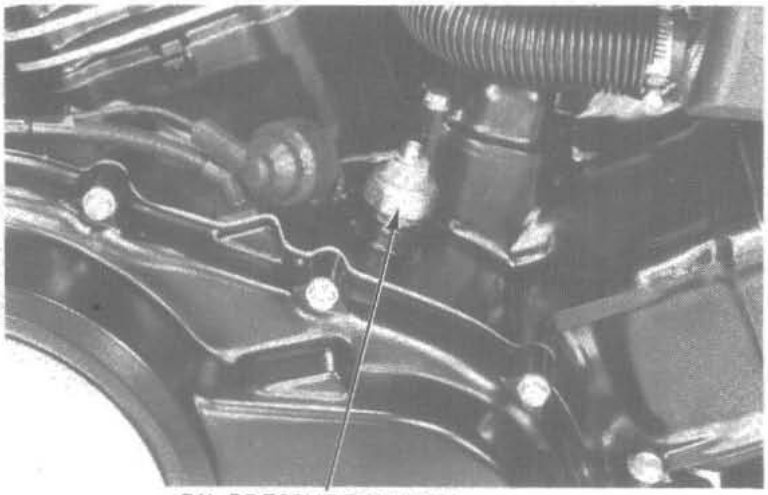

Start the engine and check the oil pressure at 5,000 rpm.

OIL PRESSURE:
4.5 ± 0.8 kg/cm² (64 ± 11 psi) at 5,000 rpm (80°C/176°F)

Stop the engine.
Apply 3-BOND® sealant or equivalent to the pressure switch threads and install.

TORQUE: 15–20 N·m (1.5–2.0 kg·m, 11–14 ft·lb)

Connect the oil pressure switch wire.
Start the engine.
Operate the warning indicator switch.
Check that the oil pressure warning indicator goes out after one or two seconds.
If the oil pressure warning indicator stays on, stop the engine immediately and determine the cause.

OIL PRESSURE GAUGE
07506–3000000 (Not available in U.S.A.)

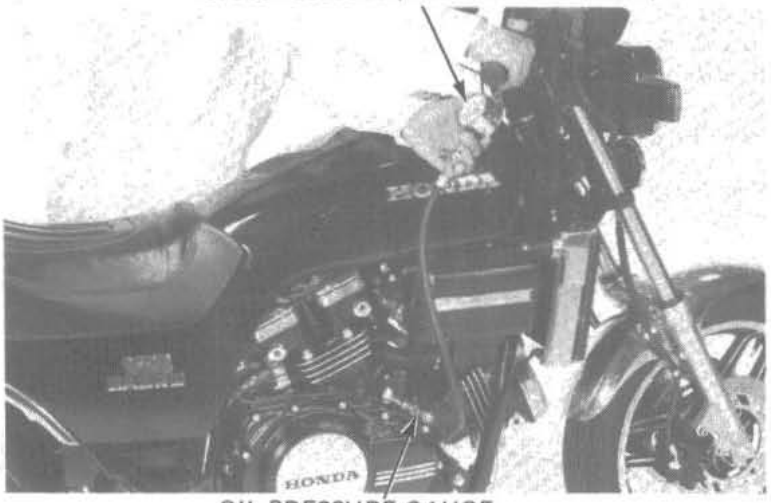

OIL PRESSURE GAUGE
ATTACHMENT 07510–4220100

OIL PUMP

REMOVAL

NOTE:

> The oil pump can be removed with the engine mounted in the frame.

Drain the engine oil. Remove the exhaust system.
Remove the right side cover.
Remove the oil pump driven sprocket by removing the bolt and washer.
Remove the water pump assembly (page 6-12).

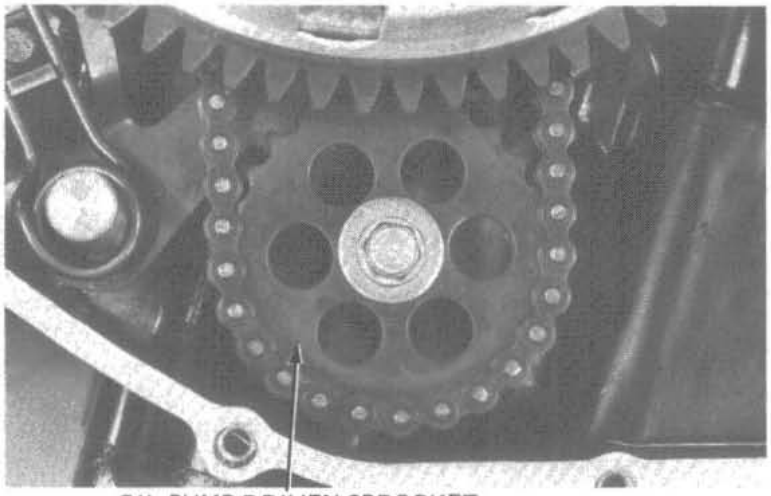

OIL PUMP DRIVEN SPROCKET

Remove the oil strainer (page 2-4) and the oil pass pipe.
Make sure the O-rings are in good condition.

OIL PASS PIPE

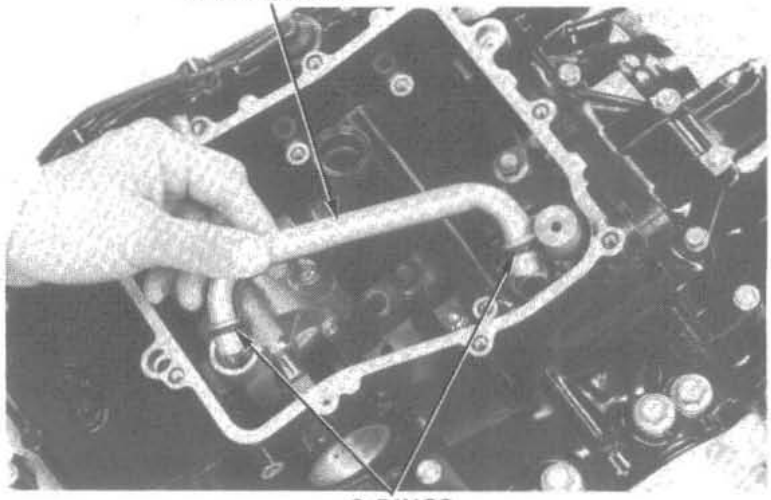

O-RINGS

Straighten and remove the pin holding the oil strainer stay.
Remove the oil strainer stay.

Make sure the O-rings are in good conditions.

Remove the oil pump by removing the mounting bolts.

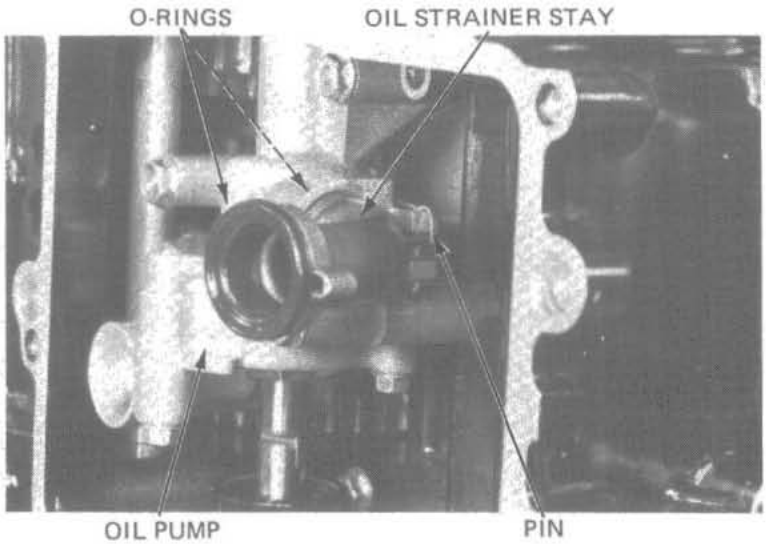

DISASSEMBLY

Remove the oil pump body cover and remove the dowel pin.
Remove the drive pin from the rotor shaft.

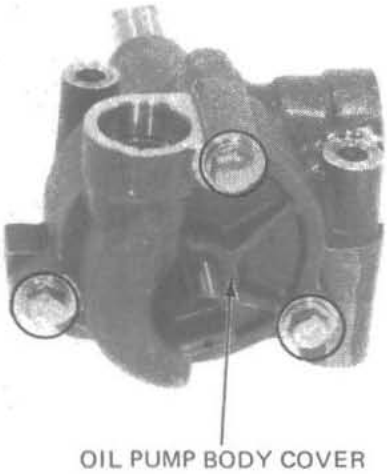

Measure the rotor tip clearance.

STANDARD: 0.15 mm (0.006 in)
SERVICE LIMIT: 0.20 mm (0.008 in)

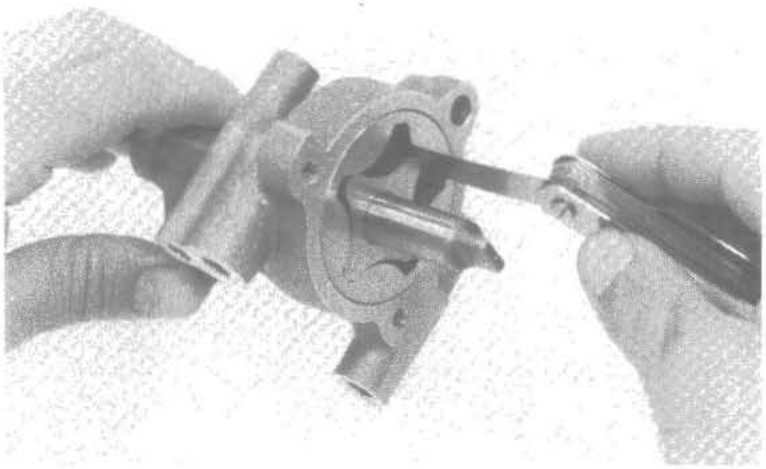

Measure the pump body clearance.

STANDARD: 0.15–0.22 mm (0.006–0.009 in)
SERVICE LIMIT: 0.35 mm (0.014 in)

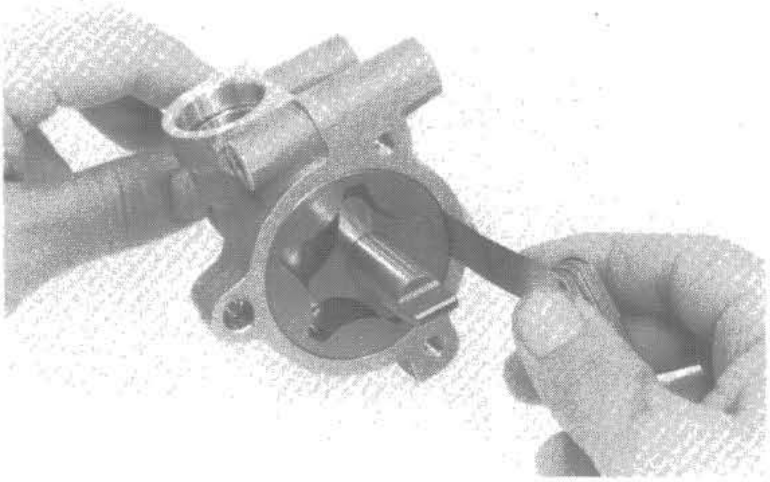

Remove the rotor shaft and measure the pump end clearance.

STANDARD: 0.02–0.07 mm (0.001–0.003 in)
SERVICE LIMIT: 0.10 mm (0.004 in)

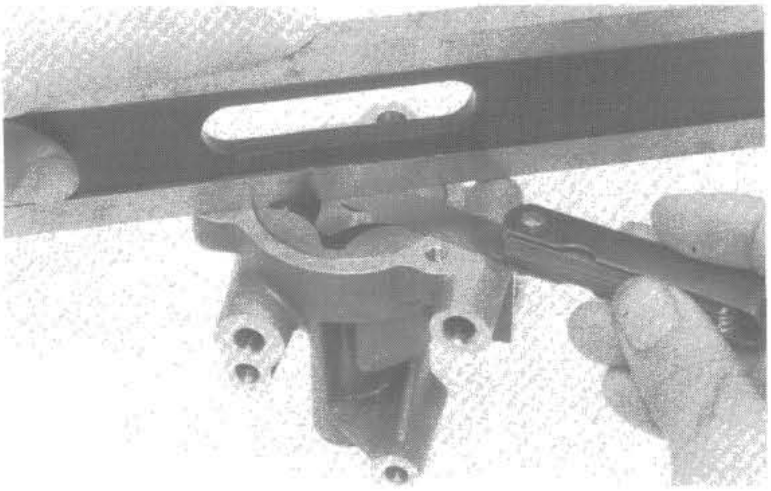

ASSEMBLY

Install the outer rotor into the body and insert the rotor shaft.
Insert the drive pin into the rotor shaft.

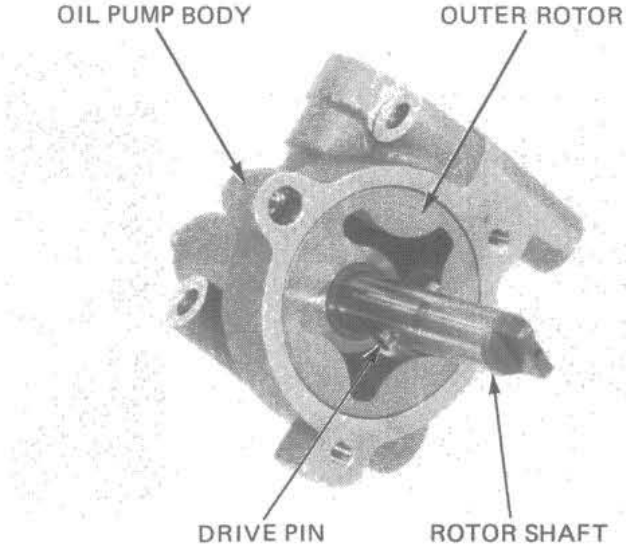

Align the slots in the inner rotor with the drive pin.

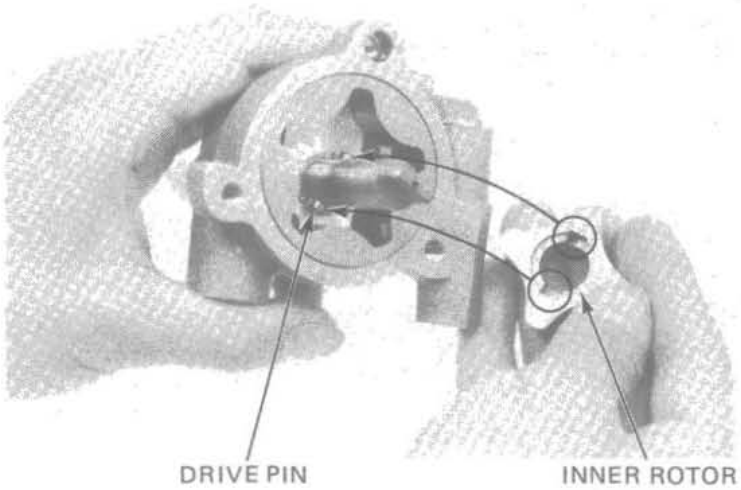

Install the dowel pin and oil pump body cover.

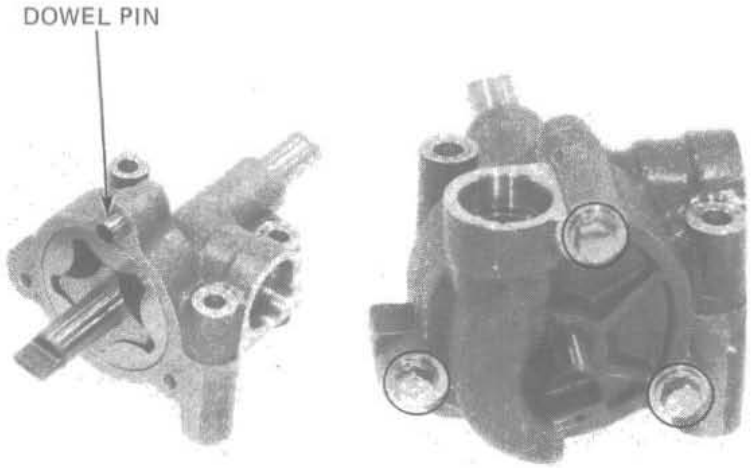

INSTALLATION

Install the dowel pins and O-ring and install the oil pump.
Install the strainer stay with a new pin and install the oil pipe.

NOTE:

Make sure the O-rings are installed on the strainer stay and oil pipe.

Install the oil strainer and oil pan.

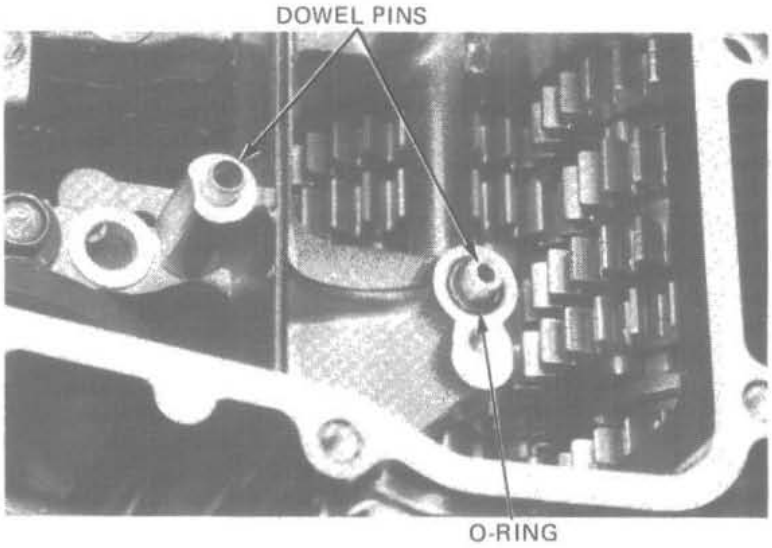

Date of Issue: May, 1982

Place the oil pump driven sprocket into the drive chain.

NOTE:

> The "IN" mark on the driven sprocket should face the crankcase.

Install the washer and tighten the bolt.

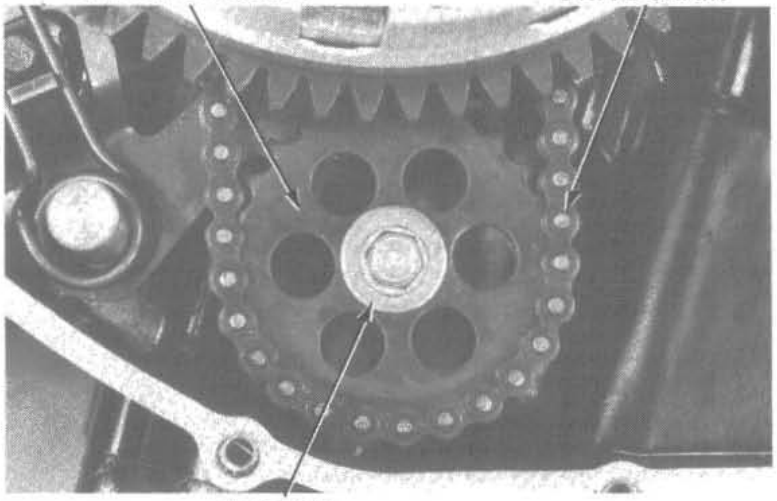

Install the dowel pins and a new gasket.
Install the right side cover.

Install the water pump assy (page 6-13).
Install the exhaust system.
Fill the engine with the recommended oil (page 2-1).

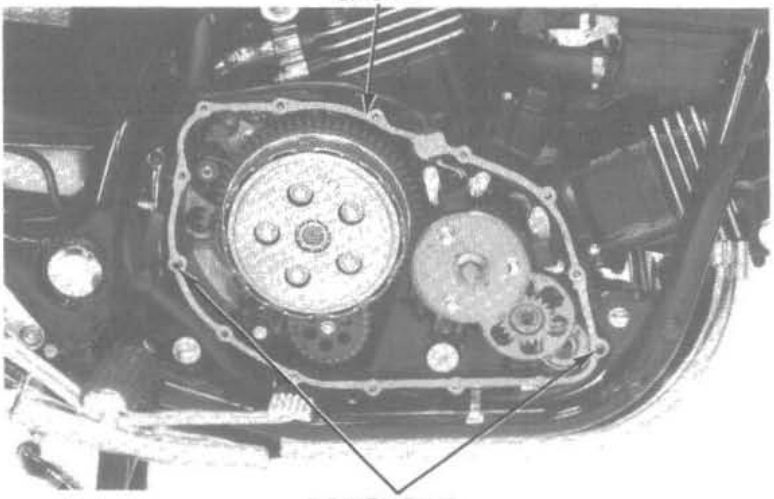

FINAL DRIVE OIL

CHECK

Place the motorcycle on its center stand on a level surface.

NOTE:

> Wait ten minutes before checking the oil level to allow the oil to drain off the ring gear and into the housing.

Remove the oil filler cap. Look into the filler cap hole with a flashlight to find the step in the casting. Align the top of the nearest gear tooth with the step, by turning the rear wheel. The oil level should be to the top of the gear tooth just below it.

If the level is low, pour the recommended oil through the filler hole to bring the level up to the top of the specified gear tooth.

RECOMMENDED OIL:
HYPOID GEAR OIL API, GL–5
SAE #90 (Above 5°C/41°F)
SAE #80 (Below 5°C/41°F)

Reinstall the oil filler cap and wipe the gear case clean.

CHANGE

Remove the oil filler cap.

Remove the drain bolt to drain all oil from the final gear case.

Install the drain bolt securely.

Fill the gear case with the recommended oil up to the correct level.

OIL CAPACITY: 110 cc (3.7 oz)

NOTE:

> If the final drive gear case has been disassembled, the correct amount to refill is 150 cc (5.1 oz).

Reinstall the oil filler cap and wipe the gear case clean.

CONTROL CABLE LUBRICATION

Periodically, disconnect the throttle cables at their upper ends. Thoroughly lubricate the cables and their pivot points with a commercially available cable lubricant or a light weight oil.

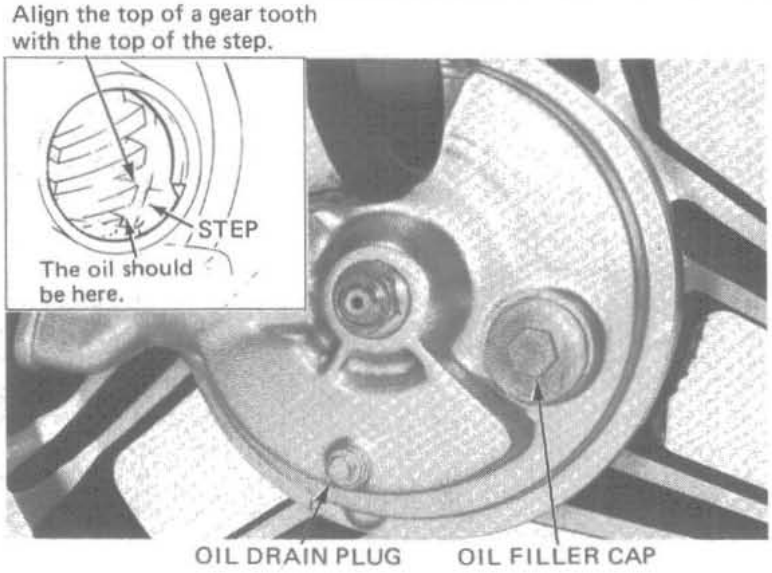

Date of Issue: October, 1982

LUBRICATION POINTS

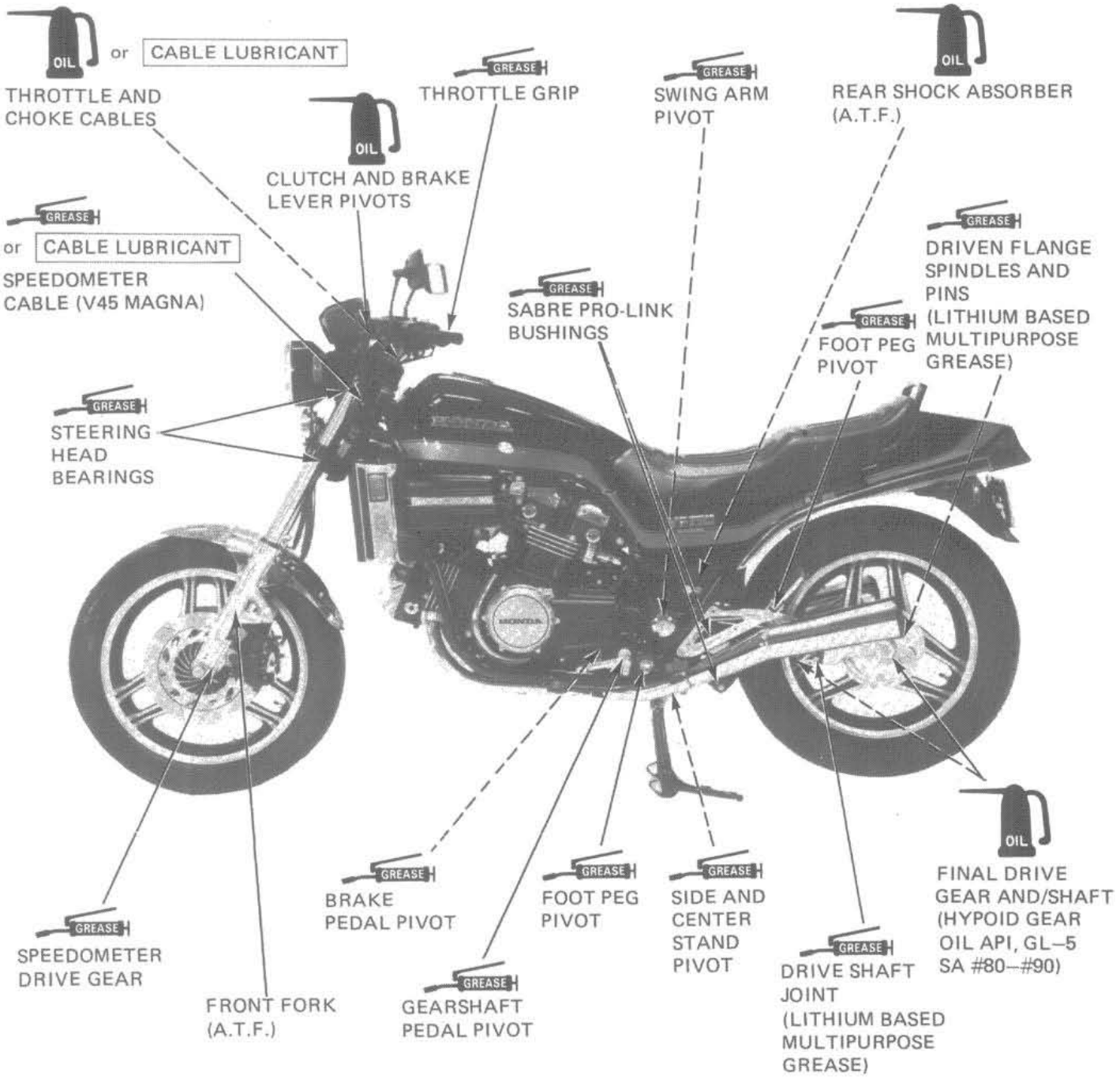

3. MAINTENANCE

SERVICE INFORMATION

GENERAL

- Engine oil See page 2-3
- Engine oil filter See page 2-3
- Final drive gear oil See page 2-10

SPECIFICATIONS

< Engine >
Spark plugs:

Standard		For cold climate (below 5°C, 41°F)		For extended high speed riding	
NGK	ND	NGK	ND	NGK	ND
DPR8EA-9	X24EPR-U9	DPR7EA-9	X22EPR-U9	DPR9EA-9	X27EPR-U9

Spark plug gap: 0.8–0.9 mm (0.031–0.035 in)

Ignition timing	
At idle:	10°BTDC
Advance starts:	10°BTDC at 1,500 rpm
Full advance:	37°BTDC at 3,300 rpm
Valve clearance	
Cold (Below 35°C, 95°F):	Intake/Exhaust: 0.12 mm (0.005 in)
Idle speed:	1,000 ± 100 rpm
Carburetor synchronization:	All carburetors within 60 mm (2.4 in) Hg
Cylinder compression:	13 ± 2 kg/cm² (184 ± 28 psi)
Throttle grip free play:	2–6 mm (1/8–1/4 in)

<CHASSIS>

Rear brake pedal free play:	20–30 mm (3/4–1-1/4 in)

Tire:

[ ] ··· V45 MAGNA

Tire size		Front	Rear
		110/90-18 61H	130/90-17 68H [130/90-16 67H]
Cold tire pressure, psi (kPa, kg/cm²)	Up to 90 kg (200 lbs) load	32 (225, 2.25)	32 (225, 2.25)
	90 kg (200 lbs) load to vehicle capacity load	32 (225, 2.25)	40 (280, 2.80)
Tire brand	Bridgestone	L303	G508
	Dunlop	F11	K127C

Suspension air pressure: Front, 6–14 psi (40–100 kPa, 0.4–1.0 kg/cm²)
Rear, 14–57 psi (100–400 kPa, 1.0–4.0 kg/cm²)

TOOLS

Special

Vacuum gauge set	07404–0020000	or M937B–021–XXXXX (U.S.A. only)
Carburetor pilot screw wrench	07908–4220201	
Carburetor throttle adjusting bit	07908–MB00000	or KS–AH–008–MBO (U.S.A. only)
Common Adjusting wrench	07708–0030200	or Snap-on Tool Wrench-X0810 or equivalent availabe in U.S.A.

Date of Issue: October, 1982

MAINTENANCE SCHEDULES
V45 SABRE-VF750S

Perform the PRE-RIDE INSPECTION in the Owner's Manual at each scheduled maintenance period.

I: INSPECT AND CLEAN, ADJUST, LUBRICATE, OR REPLACE IF NECESSARY.
C: CLEAN, R: REPLACE, A: ADJUST, L: LUBRICATE

		FREQUENCY / ITEM	WHICHEVER COMES FIRST / EVERY	ODOMETER READING (NOTE 3) 600 mi (1,000 km)	4,000 mi (6,400 km)	8,000 mi (12,800 km)	12,000 mi (19,200 km)	16,000 mi (25,600 km)	20,000 mi (32,000 km)	24,000 mi (38,400 km)	Refer to page
EMISSION RELATED ITEMS	*	FUEL LINES				I		I		I	3-5
	*	THROTTLE OPERATION		I		I		I		I	3-6
	*	CARBURETOR-CHOKE				I		I		I	3-7
		AIR CLEANERS	NOTE 1		C	C	C	C	C	C	3-7
		CRANKCASE BREATHER	NOTE 2		C	C	C	C	C	C	3-9
		SPARK PLUGS			R	R	R	R	R	R	3-9
	*	VALVE CLEARANCE		I		I		I		I	3-11
		ENIGNE OIL	YEAR	R		R		R		R	2-3
		ENGINE OIL FILTER	YEAR	R		R		R		R	2-3
	*	CARBURETOR-SYNCHRONIZE		I		I		I		I	3-12
	*	CARBURETOR-IDLE SPEED		I	I	I	I	I	I	I	3-13
		RADIATOR COOLANT				I		I		*R	3-13
	*	RADIATOR CORE				I		I		I	3-14
	*	COOLING SYSTEM HOSES & CONNECTIONS		I		I		I		I	3-14
NON-EMISSION RELATED ITEMS		FINAL DRIVE OIL				I		I		R	2-10
	*	FINAL DRIVEN FLANGE	TIRE CHANGE			L		L		L	17-7
		BATTERY	MONTH	I	I	I	I	I	I	I	3-15
		BRAKE FLUID (FRONT)	MONTH I 2 YEARS* R	I	I	I	I	I	I	*R	3-15
		BRAKE SHOE/PAD WEAR			I	I	I	I	I	I	3-16
		BRAKE SYSTEM		I		I		I		I	3-16
	*	BRAKE LIGHT SWITCH		I		I		I		I	3-17
	*	HEADLIGHT AIM		I		I		I		I	3-17
		CLUTCH FLUID	MONTH I 2 YEARS *R	I	I	I	I	I	I	*R	3-18
		CLUTCH SYSTEM		I		I		I		I	3-18
		SIDE STAND				I		I		I	3-18
	*	SUSPENSION		I		I		I		I	3-19
	*	NUTS, BOLTS, FASTENERS		I		I		I		I	3-21
	**	WHEELS		I		I		I		I	3-21
	**	STEERING HEAD BEARINGS		I		I		I		I	3-21

* SHOULD BE SERVICED BY AN AUTHORIZED HONDA DEALER, UNLESS THE OWNER HAS PROPER TOOLS AND SERVICE DATA AND IS MECHANICALLY QUALIFIED.

** IN THE INTEREST OF SAFETY, WE RECOMMEND THESE ITEMS BE SERVICED ONLY BY AN AUTHORIZED HONDA DEALER.

NOTES:
1. SERVICE MORE FREQUENTLY WHEN RIDING IN DUSTY AREAS.
2. SERVICE MORE FREQUENTLY WHEN RIDING IN RAIN OR AT FULL THROTTLE (U.S.A. ONLY).
3. FOR HIGHER ODOMETER READINGS, REPEAT AT THE FREQUENCY INTERVAL ESTABLISHED HERE.

V45 MAGNA-VF750C

Perform the PRE-RIDE INSPECTION in the Owner's Manual at each scheduled maintenance period.

I: INSPECT AND CLEAN, ADJUST, LUBRICATE, OR REPLACE IF NECESSARY.
C: CLEAN, R: REPLACE, A: ADJUST, L: LUBRICATE

		FREQUENCY / ITEM	WHICHEVER COMES FIRST → EVERY	ODOMETER READING (NOTE 3) 600 mi (1,000 km)	4,000 mi (6,400 km)	8,000 mi (12,800 km)	12,000 mi (19,200 km)	16,000 mi (25,600 km)	20,000 mi (32,000 km)	24,000 mi (38,400 km)	Refer to page
EMISSION RELATED ITEMS	*	FUEL LINES				I		I		I	3-5
	*	FUEL FILTER								R	3-5
	*	THROTTLE OPERATION		I		I		I		I	3-6
	*	CARBURETOR-CHOKE				I		I		I	3-6
		AIR CLEANER	NOTE 1			R		R		R	3-7
		CRANKCASE BREATHER	NOTE 2		C	C	C	C	C	C	3-9
		SPARK PLUGS			R	R	R	R	R	R	3-9
	*	VALVE CLEARANCE		I		I		I		I	3-11
		ENGINE OIL	YEAR	R		R		R		R	2-3
		ENGINE OIL FILTER	YEAR	R		R		R		R	2-3
	*	CARBURETOR-SYNCHRONIZE		I		I		I		I	3-12
	*	CARBURETOR-IDLE SPEED		I	I	I	I	I	I	I	3-13
		RADIATOR COOLANT				I		I		*R	3-13
	*	RADIATOR CORE				I		I		I	3-14
	*	COOLING SYSTEM HOSES & CONNECTIONS		I		I		I		I	3-14
NON-EMISSION RELATED ITEMS		FINAL DRIVE OIL				I		I		R	2-10
	*	FINAL DRIVEN FLANGE	TIRE CHANGE			L		L		L	17-7
		BATTERY	MONTH	I	I	I	I	I	I	I	3-15
		BRAKE FLUID (FRONT)	MONTH I 2 YEARS* R	I	I	I	I	I	I	*R	3-15
		BRAKE SHOE/PAD WEAR			I	I	I	I	I	I	3-16
		BRAKE SYSTEM		I		I		I		I	3-16
	*	BRAKE LIGHT SWITCH		I		I		I		I	3-17
	*	HEADLIGHT AIM		I		I		I		I	3-17
		CLUTCH FLUID	MONTH I 2 YEARS *R	I	I	I	I	I	I	*R	3-18
		CLUTCH SYSTEM		I		I		I		I	3-18
		SIDE STAND				I		I		I	3-18
	*	SUSPENSION		I		I		I		I	3-19
	*	NUTS, BOLTS, FASTENERS		I		I		I		I	3-21
	**	WHEELS		I		I		I		I	3-21
	**	STEERING HEAD BEARINGS		I		I		I		I	3-21

* SHOULD BE SERVICED BY AN AUTHORIZED HONDA DEALER, UNLESS THE OWNER HAS PROPER TOOLS AND SERVICE DATA AND IS MECHANICALLY QUALIFIED.

** IN THE INTEREST OF SAFETY, WE RECOMMEND THESE ITEMS BE SERVICED ONLY BY AN AUTHORIZED HONDA DEALER.

NOTES:
1. SERVCIE MORE FREQUENTLY WHEN RIDING IN DUSTY AREAS.
2. SERVICE MORE FREQUENTLY WHEN RIDING IN RAIN OR AT FULL THROTTLE (U.S.A. ONLY).
3. FOR HIGHER ODOMETER READINGS, REPEAT AT THE FREQUENCY INTERVAL ESTABLISHED HERE.

Date of Issue: October, 1982

FUEL LINES

Replace any parts which show deterioration, damage or leakage.

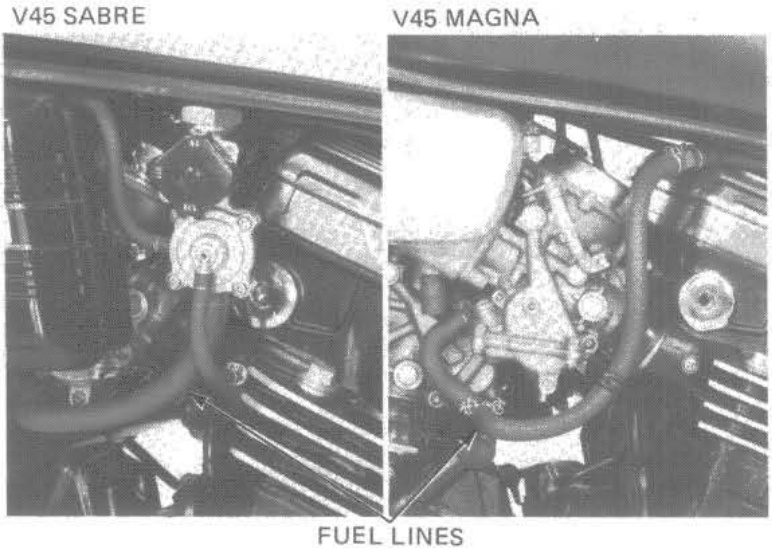

FUEL FILTER(V45 MAGNA)

WARNING

Gasoline is flammable and is explosive under certain conditions. Do not smoke or allow flames or sparks in your working area.

Turn the fuel valve OFF.
Remove the right side cover.
Remove the fuel filter from the holder.
Clip the fuel line (inlet side) closed.
Disconnect the fuel lines from the filter.
Replace the fuel filter with a new one when indicated by the maintenance schedule (See page 3-4).
Install the fuel filter and reconnect the fuel lines.
After installing, turn the fuel valve ON and check that there are no fuel leaks.

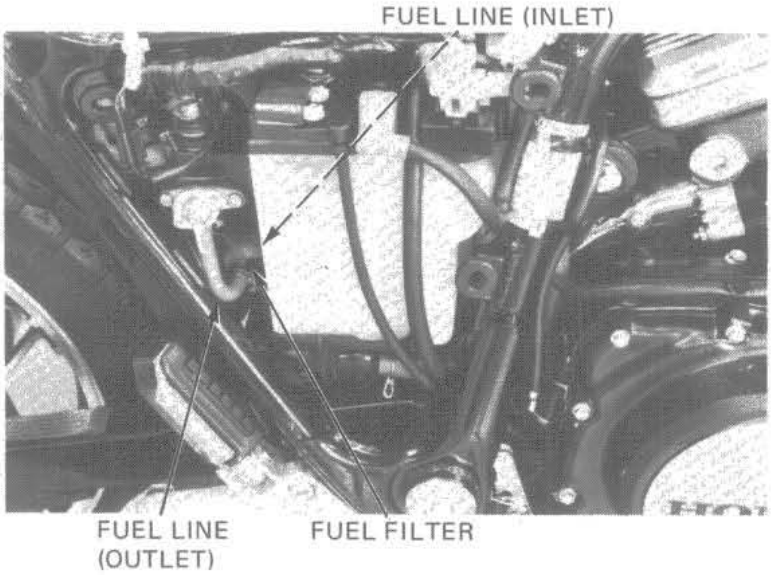

THROTTLE OPERATION

Check for smooth throttle grip full opening and automatic full closing in all steering positions. Check the throttle cables and replace them if they are deteriorated, kinked or damaged.

Lubricate the throttle cables (page 2-11), if throttle operation is not smooth.

Measure throttle grip free play at the throttle grip flange.

FREE PLAY: 2–6 mm (1/8–1/4 in)

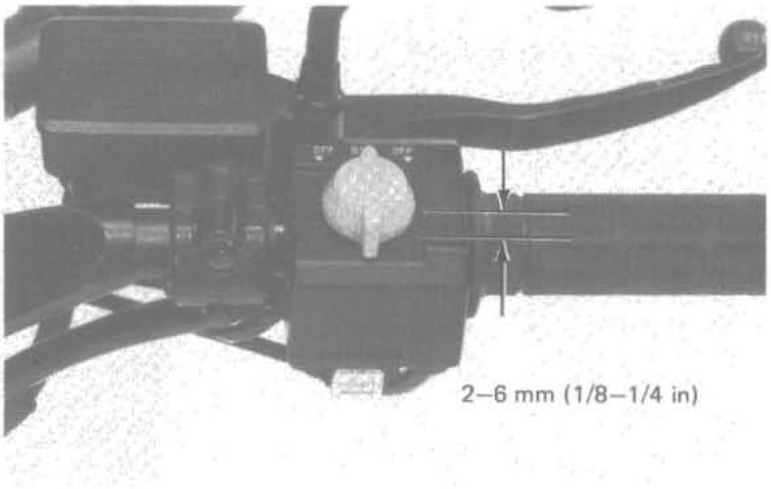

Adjustment can be made at either end of the throttle cable. Minor adjustments are made with the upper adjuster and major adjustments are made with the lower adjuster after removing the fuel tank (V45 SABRE) or lifting the fuel tank up (V45 MAGNA).
Adjust by loosening the lock nut and turning the adjuster.
Tighten the lock nut and recheck throttle operation.

Install the fuel tank, if removed.

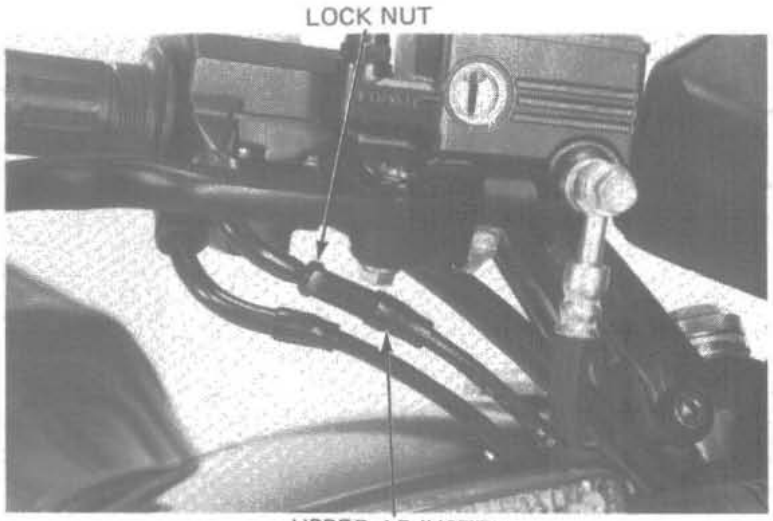

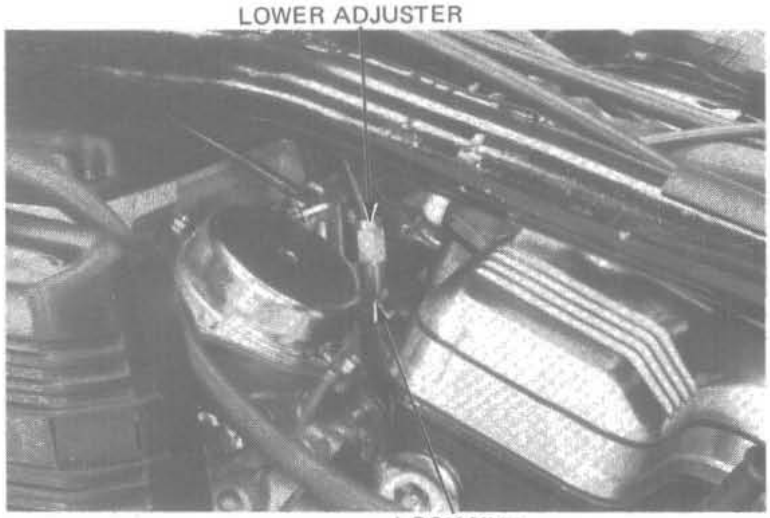

CARBURETOR CHOKE

The V45 choke system uses a fuel enrichening circuit controlled by a bystarter valve. The by-starter valve opens the enrichening circuit via cable when the choke lever on the handlebar is pushed up.
Check for smooth upper choke lever operation. Lubricate the choke cable, if the operation is not smooth.
Push the choke lever on the handlebar all the way up to fully open. Make sure the choke valve is open by trying to move the choke lever on the carburetor, after removing the fuel tank (V45 SABRE) or lifting the fuel tank up (V45 MAGNA). There should be no free play.
Adjust if necessary, by loosening the choke cable clamp on the carburetor and moving the choke cable casing so the choke lever is fully open.
Tighten the clamp.

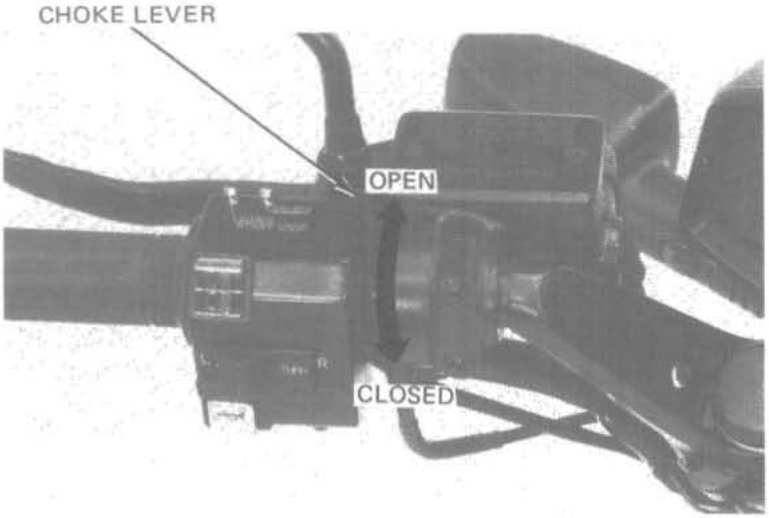

Pull the choke lever all the way to fully closed. Make sure the choke valve is fully closed by checking for free play in the cable between the lever on the carburetor and cable casing.
Reinstall the removed parts in the reverse order of disassembly.

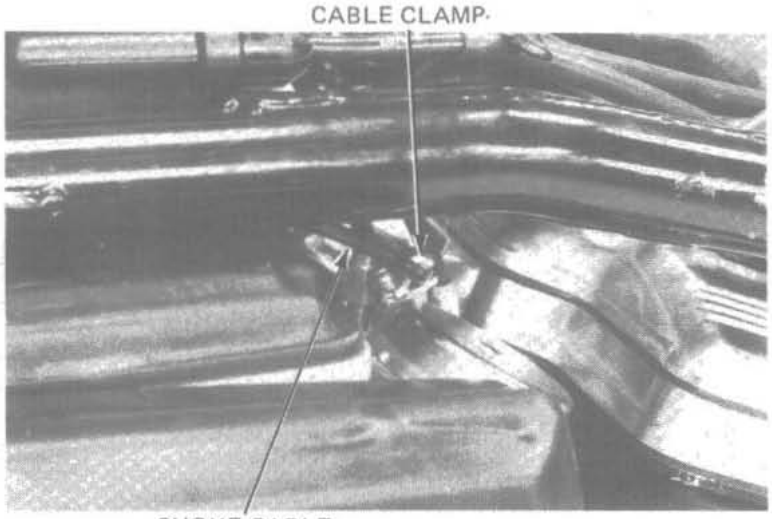

AIR CLEANER

V45 SABRE:

Remove the caps from the left and right air cleaner cover screws.
Remove the air cleaner cover screws and the two covers.

Remove the nut and washers and the two air cleaner elements.
Remove the elements from their holders.

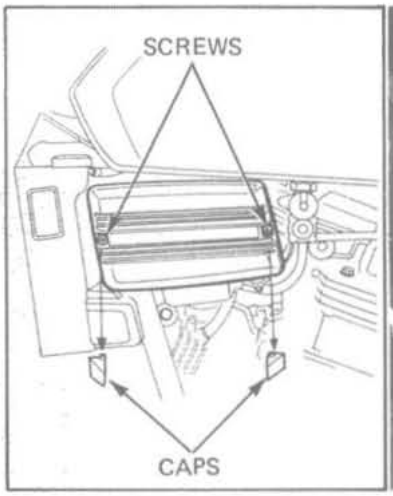

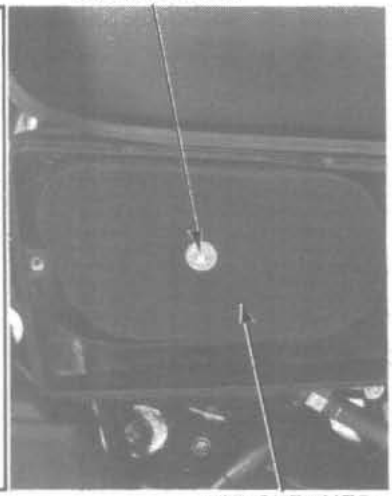

Wash the elements in non-flammable or high flash point solvent. Squeeze out and let them dry.
Soak the elements in gear oil (SAE #80–#90) and squeeze out the excess.

Install the removed parts in the reverse order of disassembly.

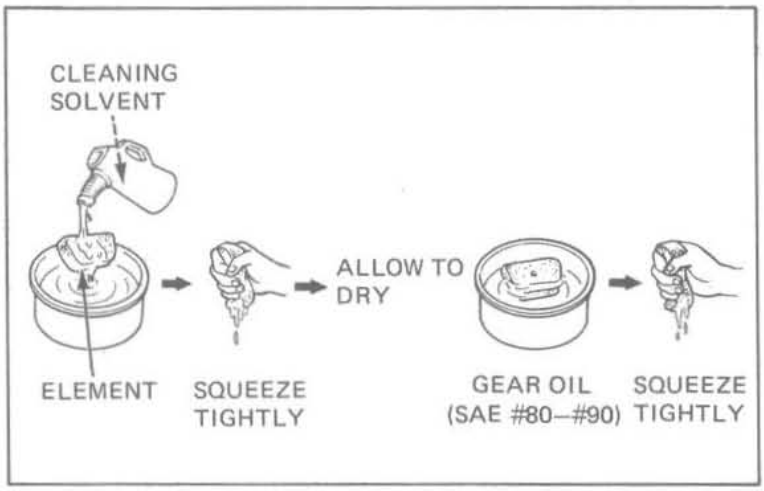

V45 MAGNA:

Make sure the fuel tank is less than half-full. Drain it, if it is more than half-full.
Remove the tank mounting bolts and lift the fuel tank up and hold it in place with the tank support rod.
Remove the air cleaner cover screws.

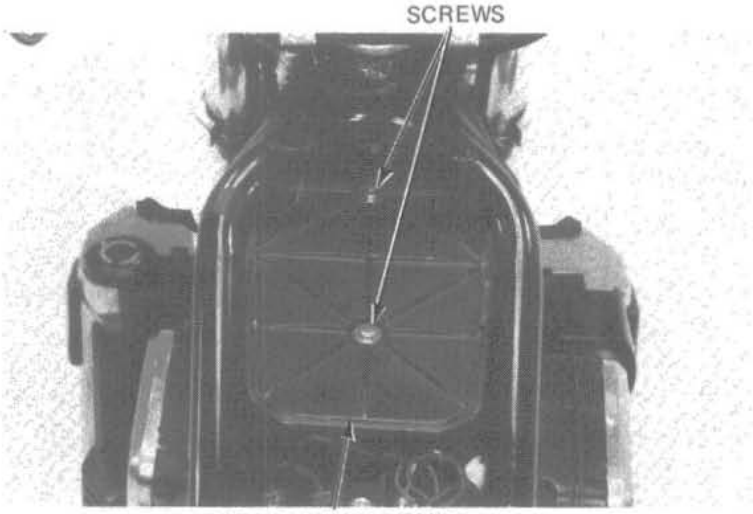

AIR CLEANER COVER

Remove the air cleaner element and discard it in accordance with the maintenance schedule.

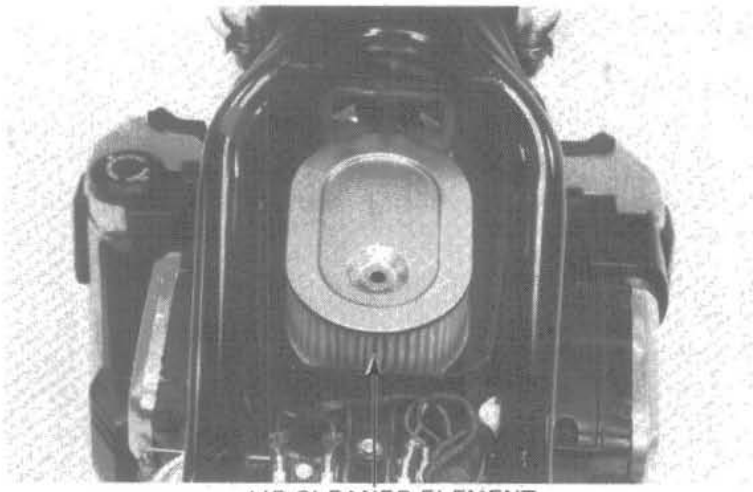

AIR CLEANER ELEMENT

Date of Issue: May, 1982

Also, replace the element if it is excessively dirty, torn or damaged.

Install a new element and install the cover.
Disengage the tank support rod by lifting up slighty.
Let the fuel tank down into place and install the fuel tank mounting bolts. Be careful not to pinch or kink the vent and fuel lines.

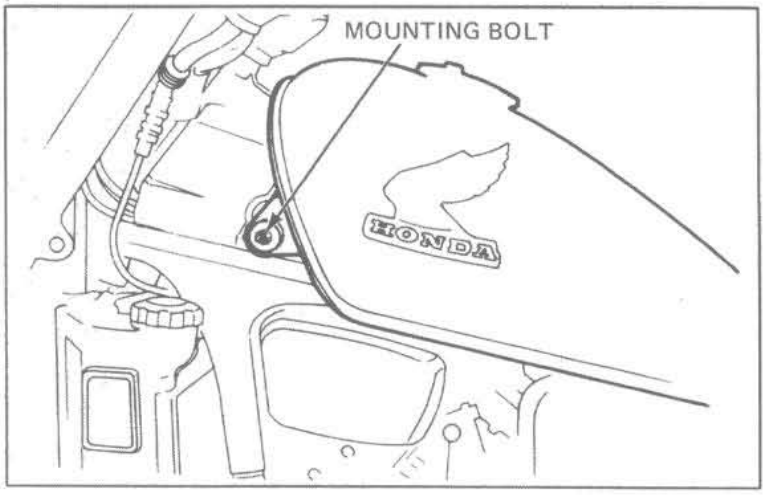

CRANKCASE BREATHER

Remove the plug from the drain tube to empty any deposits.

Install the drain plug.

NOTE:

> Service more frequently when riding in rain or at full throttle, or if the deposit level can be seen in the transparent section of the drain tube.

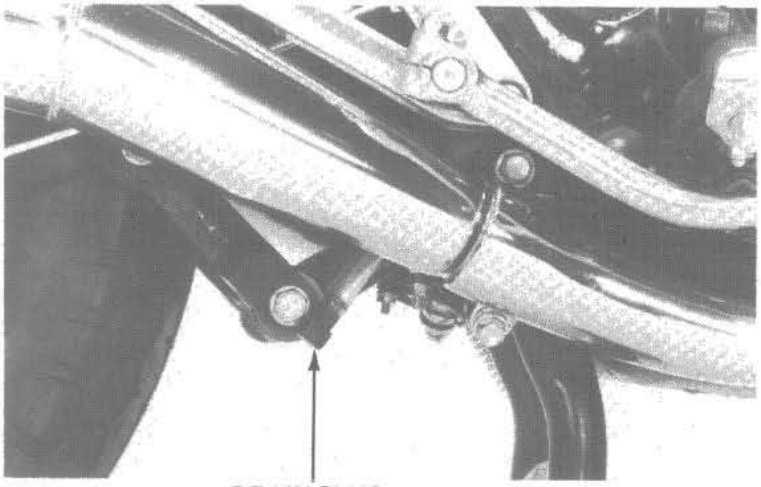

SPARK PLUGS

RECOMMENDED SPARK PLUGS

	NGK	ND
Standard	DPR8EA-9	X24EPR-U9
For cold climiate (Below 5°C, 41°F)	DPR7EA-9	X22EPR-U9
For extended high speed riding	DPR9EA-9	X27EPR-U9

Disconnect the spark plug caps.
Clean any dirt from around the spark plug bases.
Remove and discard the spark plugs.
Measure the new spark plug gaps using a wire-type feeler gauge.

SPARK PLUG GAP: 0.8–0.9 mm (0.031–0.035 in)

Adjust by bending the side electrode carefully.
With the plug washer attached, thread each spark plugs in by hand to prevent crossthreading.
Tighten the spark plugs another 1/2 turn with a spark plug wrench to compress the plug washer.
Connect the spark plug caps.

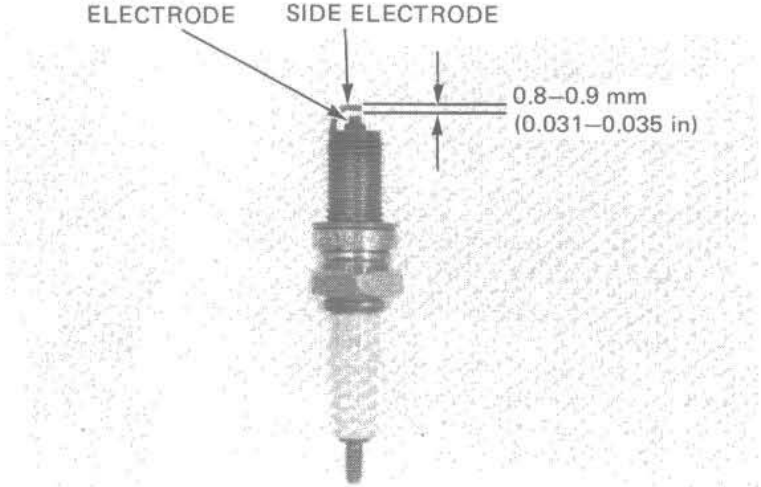

IGNITION SYSTEM

NOTE:

> The ignition system is transistorized and cannot be adjusted. If the ignition timing is incorrect, check the spark unit and pulse generator and replace any faulty parts (Section 20).

Remove the alternator and left crankcase covers.

Wipe off the oil from the flywheel.

Connect the timing light to the high tension wire of the No. 1 cylinder.

Start the engine and let it idle.

IDLE SPEED: 1,000 ± 100 rpm

The timing is correct if the "F" mark on the flywheel aligns with the crankcase rear mating surfaces.

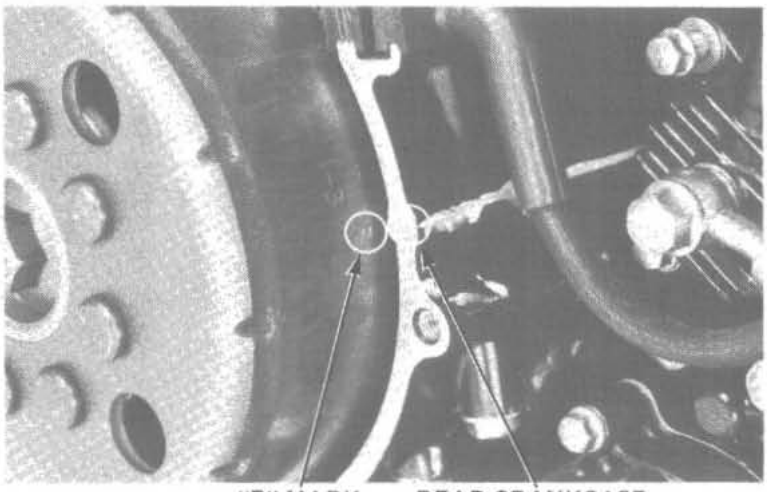

VALVE CLEARANCE

NOTE

> Inspect and adjust valve clearance while the engine is cold. (Below 35°C, 95°F)

Drain coolant from engine and frame (page 6-3).

NOTE

> Drain the coolant into a clean container for reuse. Scheduled coolant replacement is every 2 years or 24,000 miles (38,600 km).

Remove the right and left frame side ccovers and remove the seat.

Turn the fuel valve "OFF" (V45 MAGNA) and remove the fuel tank (V45 SABRE).

Lift up the fuel tank by removing the front mounting bolts (V45 MAGNA). Be sure the tank is less than half full.

If not, drain the tank.

Remove the spark plug caps.

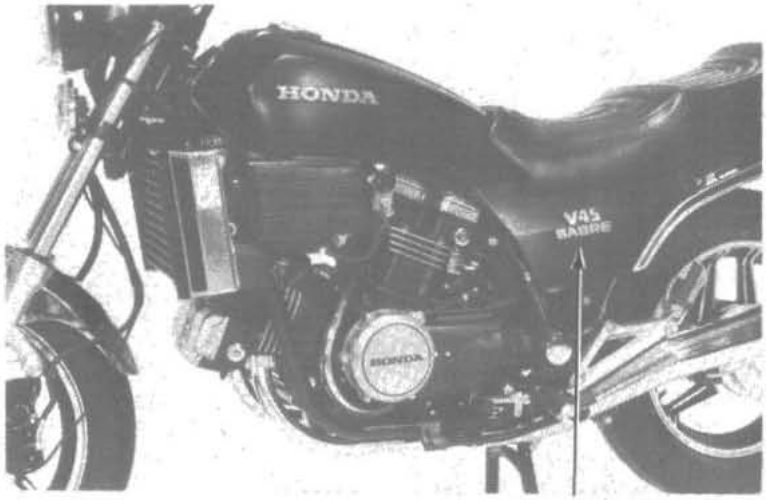

Date of Issue: October, 1982

Remove the radiator (See page 6-8).
Remove the front and rear cylinder head cover bolts and both cylinder head covers.
Remove the alternator and left crankcase covers.

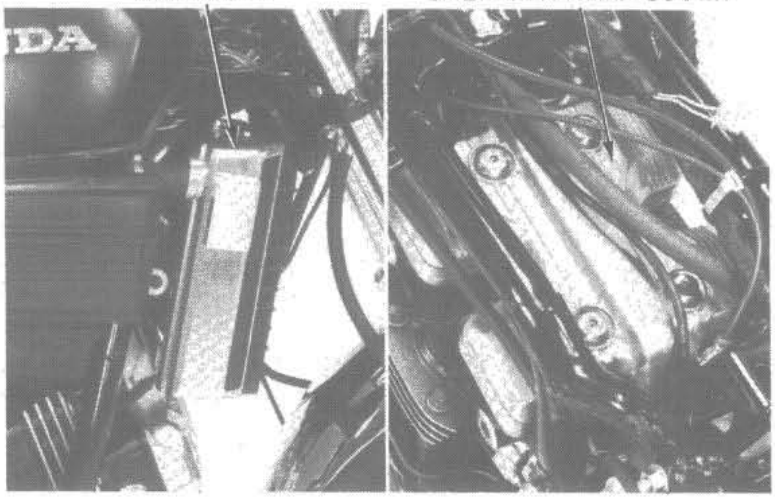

INSPECTION

Measure and adjust the intake and exhaust valve clearances as described below.

Rotate the crankshaft clockwise to align the T1.3 mark with the crankcase mating surfaces.
Make sure the No. 1 piston is at TDC (Top Dead Center) on the compression stroke.

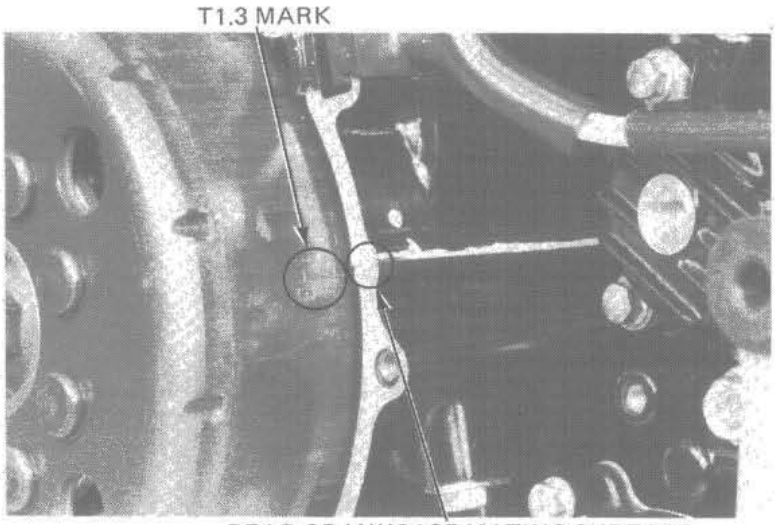

Check the valve clearances for the No. 1 cylinder using two feeler gauges for each pair of valves; one for each valve that shares a common rocker arm.

VALVE CLEARANCE (IN, EX):
0.12 mm (0.005 in)

If adjustment is needed, loosen the lock nuts and turn the adjusting screws until there is a slight drag on both feeler gauges. Both feeler gauges should remain inserted during adjustment.

Hold the adjusting screws and tighten the lock nuts.

TORQUE: 21–25 N·m (2.1–2.5 kg-m, 15–18 ft-lb)

CAUTION:

The lock nuts will come loose if not tightened to the correct torque value.

Recheck the valve clearance.

Rotate the crankshaft 270° clockwise to align the T2.4 mark with the crankcase mating surfaces and check the valve clearances for the No. 2 cylinder.

Adjust using the procedures for the No. 1 cylinder.

Rotate the crankshaft 90° clockwise to align the T1.3 mark with the crankcase mating surfaces and check the valve clearances for the No. 3 cylinder.

Adjust using the procedures for the No. 1 cylinder.

Rotate the crankshaft 270° clockwise to align the T2.4 mark with the crankcase mating surfaces and check the valve clearances for the No. 4 cylinder.

Adjust using the same procedures as for the No. 1 cylinder.

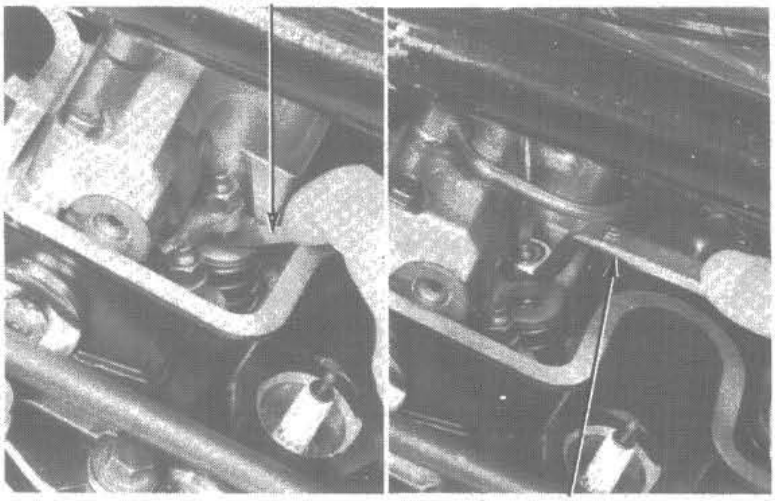

Install the removed parts in the reverse order of disassembly.
Be sure the cast marks inside the cylinder head cover face the front.
Also, the gasket tab of the rear cylinders head cover spacer should face forward.

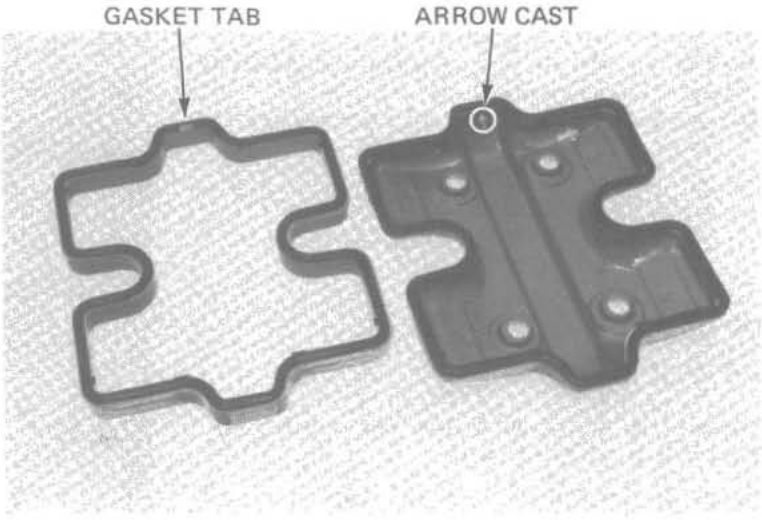

CARBURETOR SYNCHRONIZATION

NOTE

> Synchronize the carburetors with the engine at normal operating temperature, transmission in neutral and motorcycle on the centerstand.

Remove the plugs from the No. 2, 3 and 4 cylinder head ports and install the vacuum gauge adapters.

Connect the vacuum gauges.

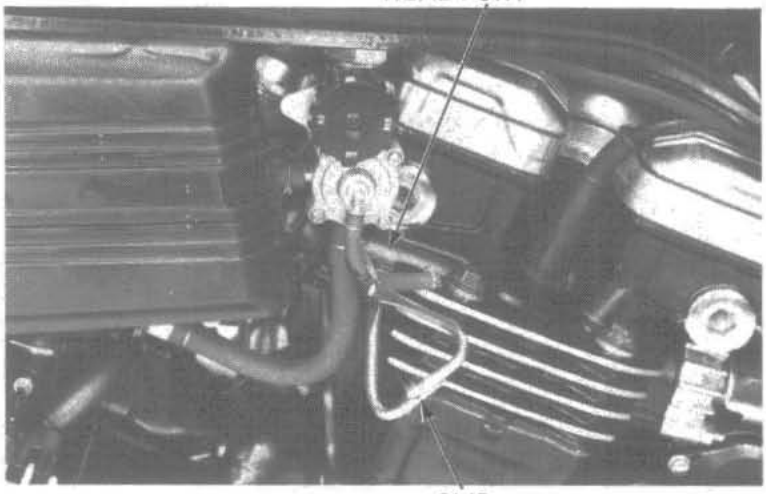

ADJUSTMENT

NOTE

> The No. 1 carburetor cannot be adjusted; It is the base carburetor.

Start the engine and adjust the idle speed.

IDLE SPEED: 1,000 ± 100 rpm

Clip the vacuum tube for the automatic fuel valve shut, as shown in the middle photo.
Stop the engine and remove the automatic fuel valve vacuum tube from the No. 1 cylinder head.
Install the vacuum gauge adapter and connect the vacuum gauge.
Check that all carburetors are within 60 mm (2.4 in) Hg.

Date of Issue: October, 1982

Synchronize to specification by loosening the adjusting screw lock nuts and turning the adjusting screws with the following tools:
To adjust the No. 2, 4 carburetor –
Carburetor adjusting wrench (07908–4220201)
To adjust the No. 3 carburetor –
Carburetor throttle adjusting bit (07908–MB00000) or (KS–AH–008–MB0, USA only) and Adjusting wrench (07708–0030200) or Snap-On Tool Wrench X0810 or equivalent available in U.S.A.

Recheck the idle speed and synchronization.
Remove the gauge adapters and install the plugs.

Remove the clip from the automatic fuel valve vacuum tube. Reconnect the tube to the No. 1 cylinder.

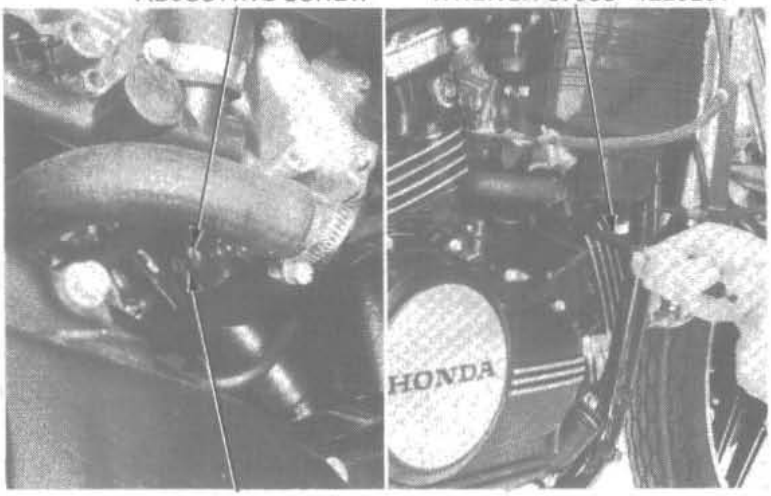

CARBURETOR IDLE SPEED

NOTE

- Inspect and adjust idle speed after all other engine adjustments are within specifications.
- The engine must be warm for accurate adjustment. Ten minutes of stop-and-go riding is sufficient.

Warm up the engine, shift to NEUTRAL, and place the motorcycle on its center stand.
Turn the throttle stop screw as required to obtain the specified idle speed.

IDLE SPEED: 1,000 ± 100 rpm

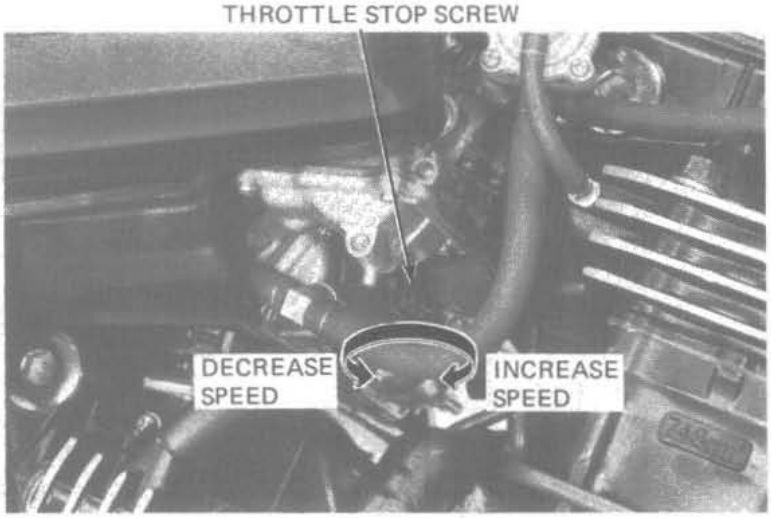

RADIATOR COOLANT

Remove the frame left side cover (V45 SABRE).
Remove the frame right side cover (V45 MAGNA).

Check the coolant level of the reserve tank with the engine runing at normal operating temperature.
The level should be between the "FULL" and "LOW" level lines.
If necessary, remove the reserve tank cap and fill to the "FULL" level line with a 50/50 mixture of distilled water and anti-freeze.
Reinstall the cap and frame side cover.

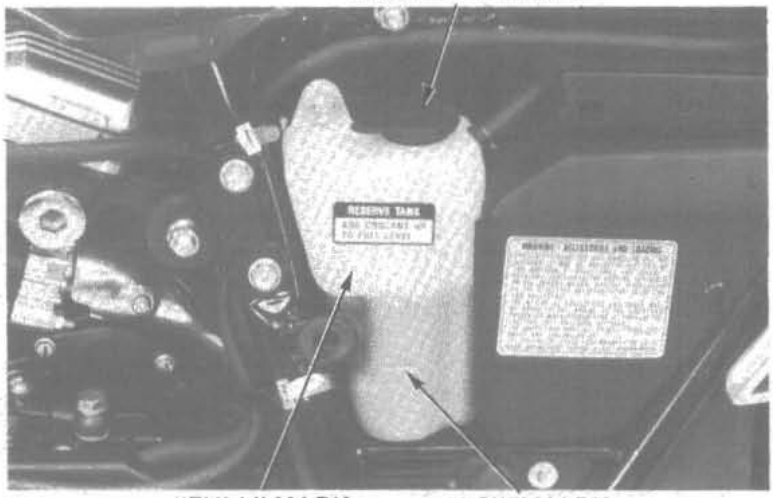

RADIATOR CORE

Check the air passages for clogging or damage.
Straighten bent fins, remove insects, mud or any obstruction with compressed air or low water pressure.
Replace the radiator if the air flow is restricted over more than 20% of the radiating surface.

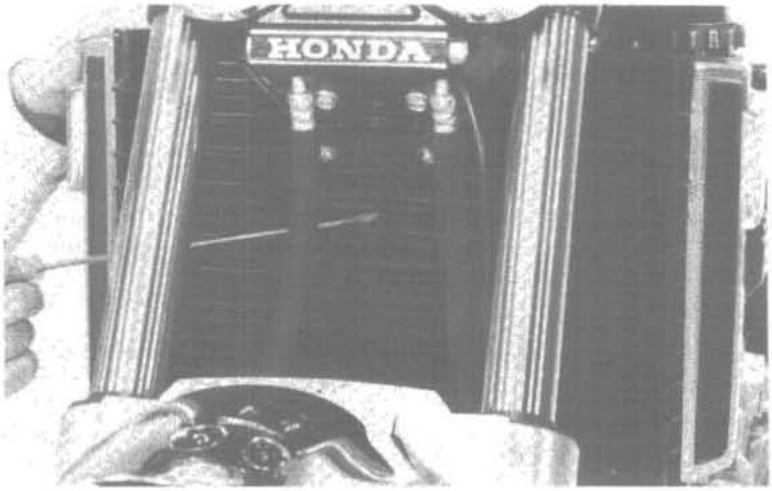

COOLING SYSTEM HOSES

Inspect the hoses for cracks or deterioration, and replace if necessary.
Check the tightness of all hose clamps.

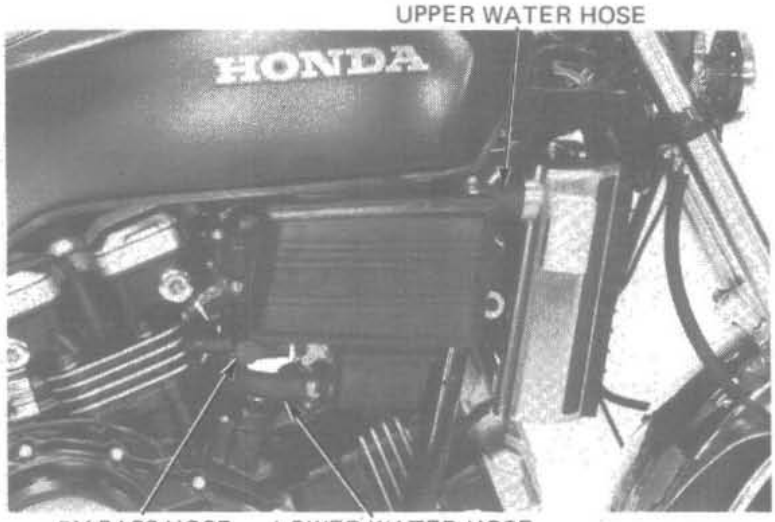

CYLINDER COMPRESSION

Warm up the engine.
Stop the engine, then disconnect the spark plug caps and remove the spark plugs.
Insert the compression gauge.
Open the throttle all the way and crank the engine with the starter motor.

NOTE:

> Crank the engine until the gauge reading stops rising. The maximum reading is usually reached within 4-7 seconds.

COMPRESSION PRESSURE:
13 ± 2 kg/cm² (184 ± 28 psi)

If compression is low, check for the following:
- Leaky valves
- Improper valve clearance
- Leaking cylinder head gasket
- Worn piston/ring/cylinder

If compression is high, it indicates that carbon deposits have accumulated on the combustion chamber and/or the piston crown.

Date of Issue: May, 1982

<CHASSIS>

BATTERY

V45 SABRE:

Remove the right frame side cover and inspect the battery fluid level.
When the fluid level nears the lower level, remove the battery and add distilled water to the upper level line as follows:
Disconnect the negative cable at the battery terminal. Then remove the positive cable.
Remove the battery holder plate bolt and plate. Pull out the battery and add distilled water to the upper level line. Reinstall the battery.

V45 MAGNA:

Remove the right frame side cover and inspect the battery fluid level.
Remove the battery when the fluid level nears the lower level line as follows:
Remove the seat.
Disconnect the negative cable at the battery terminal. Then remove the positive cable.

Remove the battery holder plate bolt and plate. Pull out the battery and add distilled water to the upper level line.
Reinstall the battery.

NOTE:

> Add only distilled water. Tap water will shorten the service life of the battery.

WARNING

> *The battery electrolyte contains sulphuric acid. Protect your eyes, skin, and clothing. If electrolyte gets in your eyes, flush them thoroughly with water and get prompt medical attention.*

V45 SABRE:

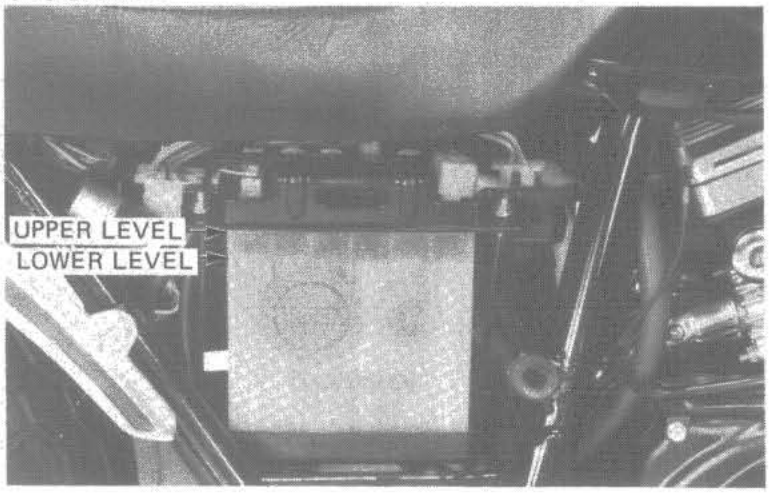

V45 MAGNA:

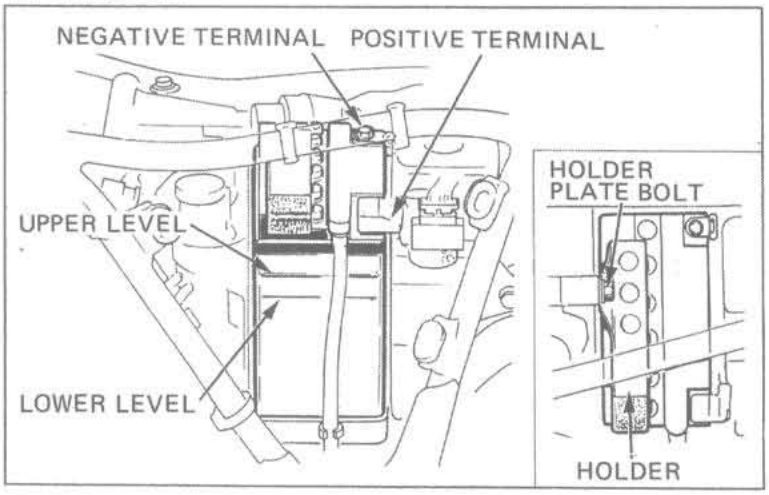

BRAKE FLUID

Check the front brake fluid reservoir level.
If the level nears the lower level mark, fill the reservoir with DOT-3 BRAKE FLUID to the upper level mark.
Check the entire system for leaks, if the level is low.

CAUTION:

- *Do not remove the cover until the handlebar has been turned so that the reservoir is level.*
- *Avoid operating the brake lever with the cap removed. Brake fluid will squirt out if the lever is pulled.*
- *Do not mix different types of fluid, as they are not compatible.*

Refer to section 16 for brake bleeding procedures.

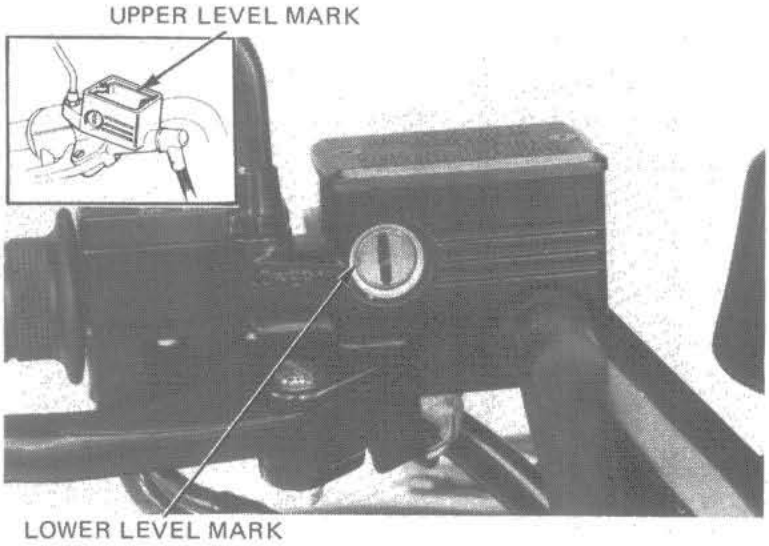

BRAKE SHOE/PAD WEAR

BRAKE PAD WEAR

Check the brake pads for wear by looking through the slot indicated by the arrow cast on the caliper assembly.
Replace the brake pads if the wear line on the pads reaches the edge of the brake disc (page 16-5).

CAUTION:

Always replace the brake pads in pairs to assure even disc pressure.

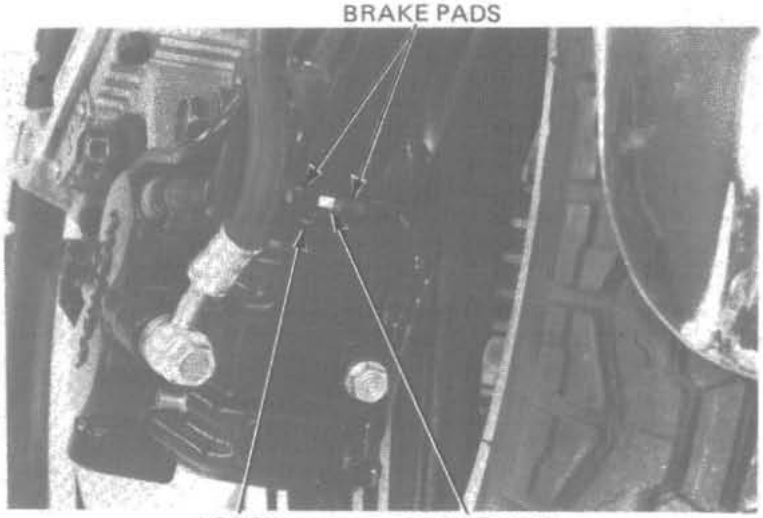

BRAKE SHOE INSPECTION (WEAR INDICATOR)

Replace the brake shoes if the arrow on the brake arm aligns with the reference mark "△" on full application of the rear brake pedal.

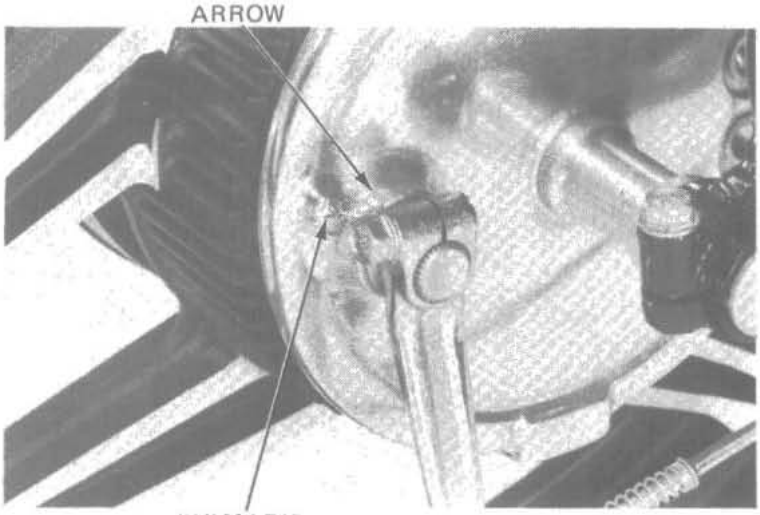

BRAKE SYSTEM

Inspect the brake hoses and fittings for deterioration, cracks and signs of leakage. Tighten any loose fittings.
Replace hoses and fittings as required.

BRAKE PEDAL HEIGHT

Adjust brake pedal height so the pedal is 7 mm (1/4 in) below the top of the foot peg.

CAUTION:

Incorrect brake pedal height can cause brake drag.

To Adjust:
Loosen the stopper bolt lock nut and turn the stopper bolt.
Retighten the lock nut.

NOTE:

After adjusting the brake pedal height, check the rear brake light switch and brake pedal free play and adjust if necessary.

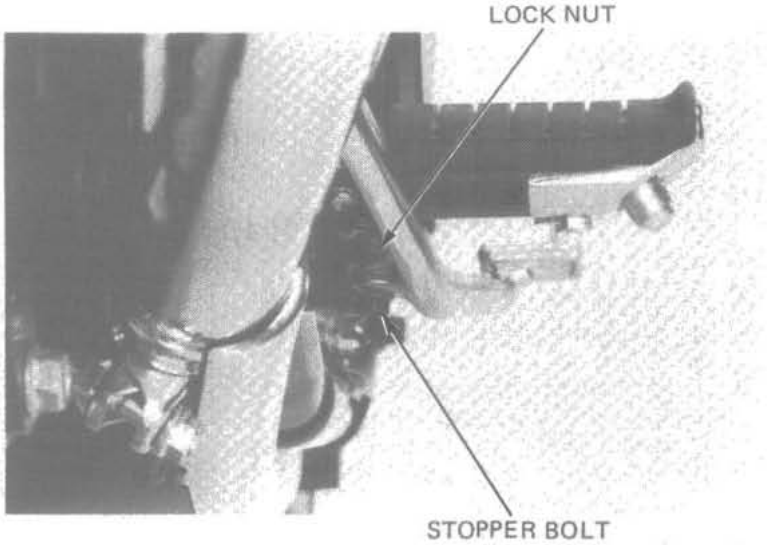

Date of Issue: May, 1982

BRAKE PEDAL FREE PLAY

NOTE:

> Perform brake pedal free play adjustment after adjusting brake pedal height.

Check the brake pedal free play.

FREE PLAY: 20–30 mm (3/4–1-1/4 in)

If adjustment is necessary, turn the rear brake adjusting nut.

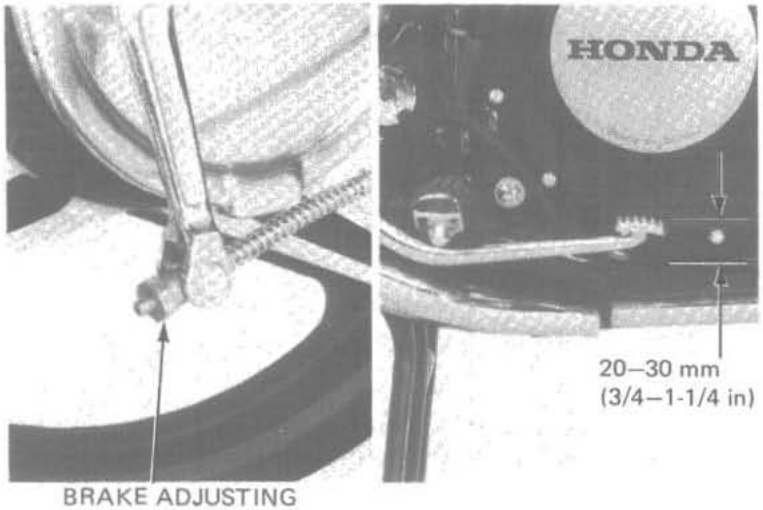

BRAKE ADJUSTING NUT

BRAKE LIGHT SWITCH

NOTE:

> Perform brake light switch adjustment after adjusting the brake pedal play and height.

Adjust the brake light switch so that the brake light will come on when the brake pedal is depressed 20 mm (3/4 in), and brake engagement begins. Adjust by holding the switch body and turning the adjusting nut. Do not turn the switch body.

NOTE:

> The front brake light switch does not require adjustment.

BRAKE LIGHT SWITCH

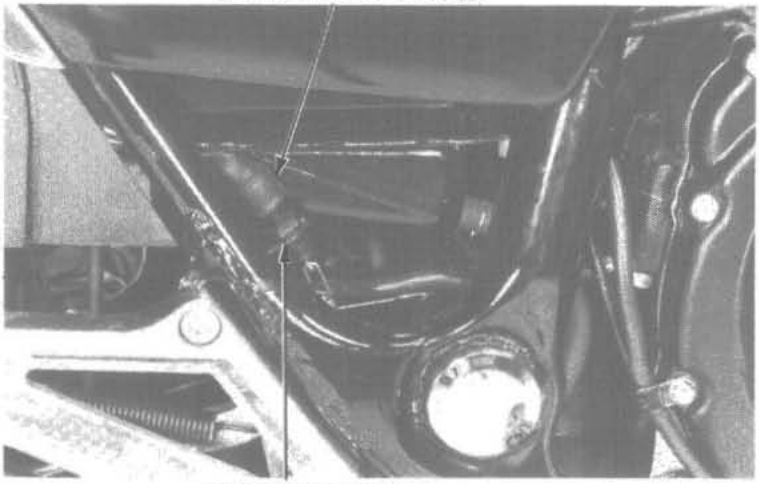

ADJUSTING NUT

HEADLIGHT AIM

V45 SABRE:

Adjust vertically by turning the adjusting screw below the meter assembly (tachometer).

Adjust horizontally by turning the adjusting screw on the headlight case.

Turn the adjusting screw clockwise to direct the beam toward the right side of the rider.

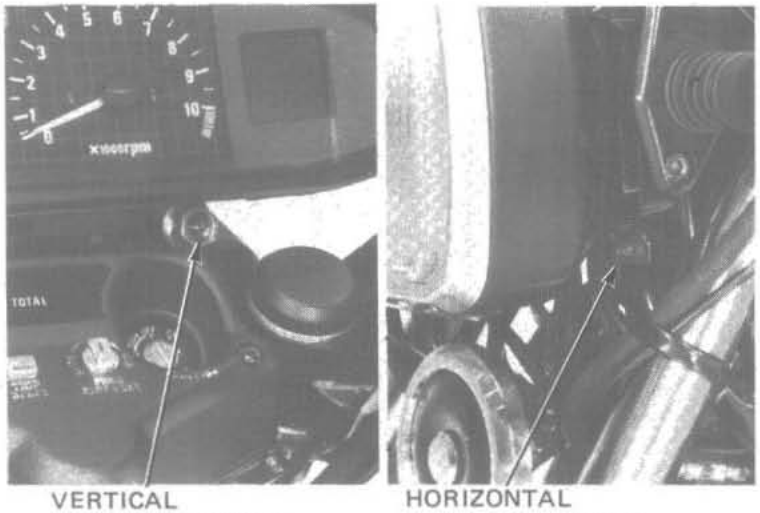

VERTICAL ADJUSTING SCREW

HORIZONTAL ADJUSTING SCREW

V45 MAGNA:

Adjust vertically by loosening both headlight case mounting bolts.

Adjust horizontally by turning the adjusting screw on the headlight rim.
Turn the adjusting screw clockwise to direct the beam toward the right side of the rider.

NOTE:

Adjust the headlight beam as specified by local laws and regulations.

WARNING

An improperly adjusted headlight may blind oncoming drivers, or it may fail to light the road for a safe distance.

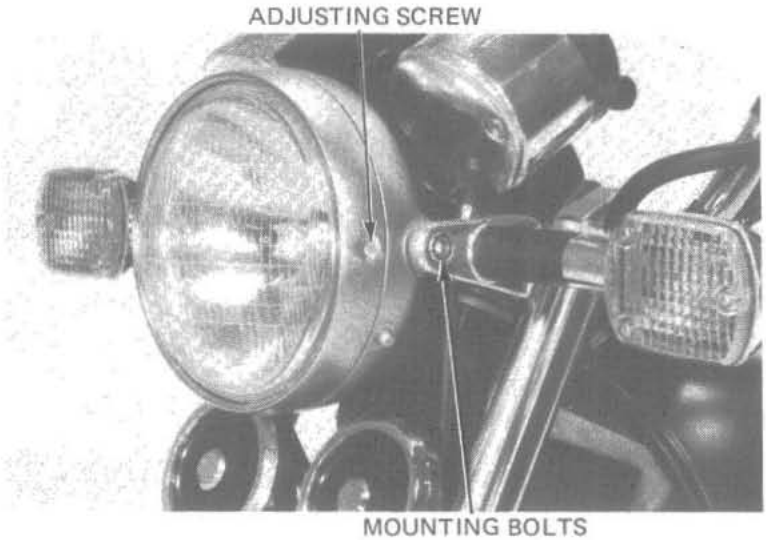

CLUTCH

Check the clutch fluid reservoir level.

If the level nears the lower level mark, fill the reservoir with DOT-3 BRAKE FLUID to the upper level mark.
Check the entire system for leaks, if the level is low.

CAUTION:

- *Do not remove the cover until the handlebar has been turned so that the reservoir is level.*
- *Avoid operating the clutch lever with the cap removed. Fluid will squirt out if the lever is pulled.*
- *Do not mix different types of fluid, as they are not compatible.*

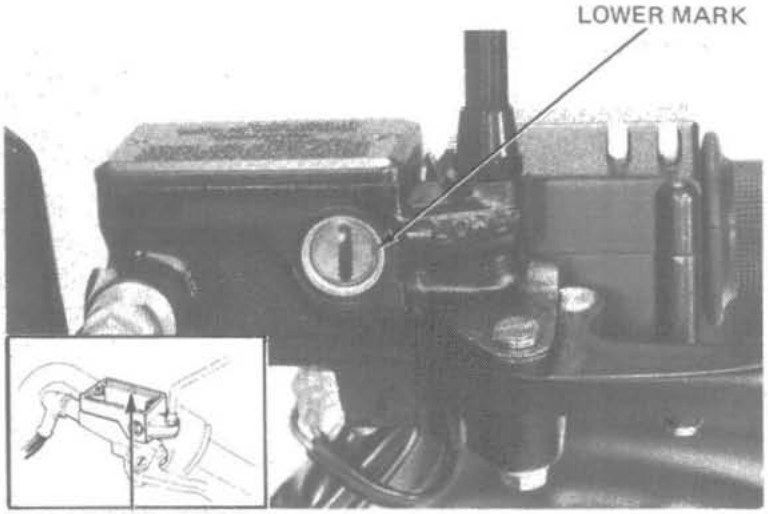

SIDE STAND

Check the rubber pad for deterioration or wear. Replace if any wear extends to wear line as shown. Check the side stand spring for damage and loss of tension, and the side stand assembly for freedom of movement. Make sure the side stand is not bent.

NOTE:

- When replacing, use a rubber pad with the mark "Over 260 lbs ONLY".
- Spring tension is correct if the measurements fall within 2–3 kg (4.4–6.6 lb), when pulling the side stand lower end with a spring scale.

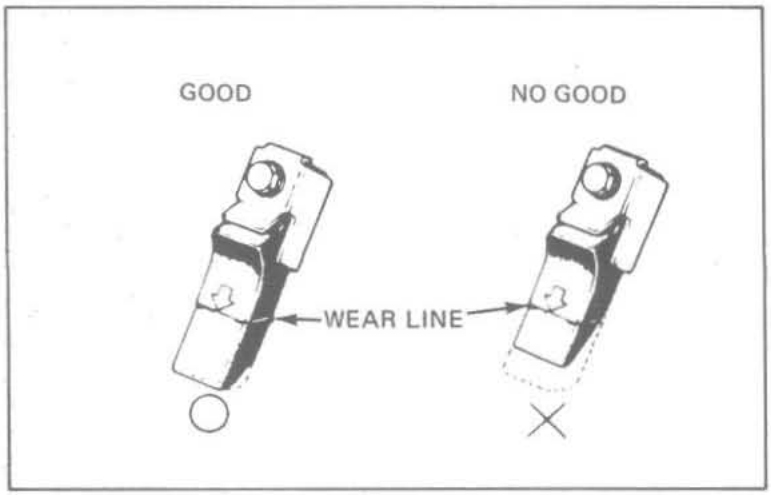

Date of Issue: May, 1982

SUSPENSION

WARNING

Do not ride a vehicle with faulty suspension. Loose, worn or damaged suspension parts impair vehicle stability and control.

FRONT

Check the action of the front forks by compressing them several times.
Check the entire fork assembly for leaks or damage. Replace damaged components which cannot be repaired.
Tighten all nuts and bolts.

Check the front fork air pressure when the forks are cold.
Place the vehicle on its center stand.
Remove each air valve cap and measure the air pressure.

AIR PRESSURE:
6–14 psi (40–100 kPa, 0.4–1.0 kg/cm^2)

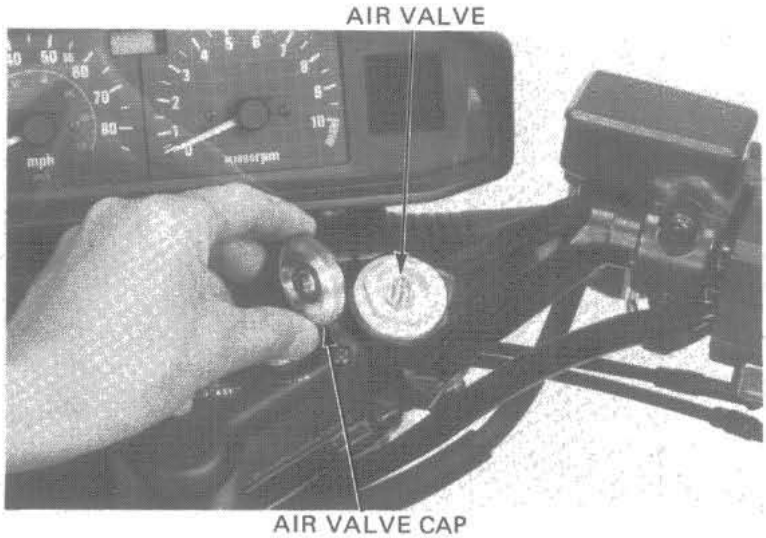

ANTI-DIVE SYSTEM INSPECTION

WARNING

Select a safe place away from traffic to perform this inspection.

Check the operation of the anti-dive system by riding the motorcycle and firmly applying the brakes.

Position	Anti-dive damper force
I	LIGHT ANTI-DIVE
II	MEDIUM
III	HARD
IV	MAXIMUM ANTI-DIVE

Inspect and if necessary, repair the system (Refer to section 15).

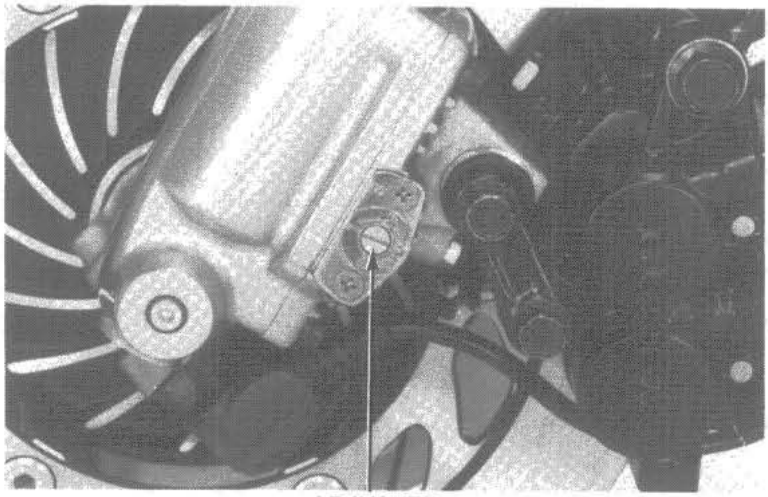

REAR

Place the motorcycle on its center stand.
Move the rear wheel sideways with force to see if the swingarm bearings are worn.
Replace the bearings if there is any looseness (page 18-4).
Check the shock absorbers for leaks or damage.
Tighten all rear suspension nuts and bolts.

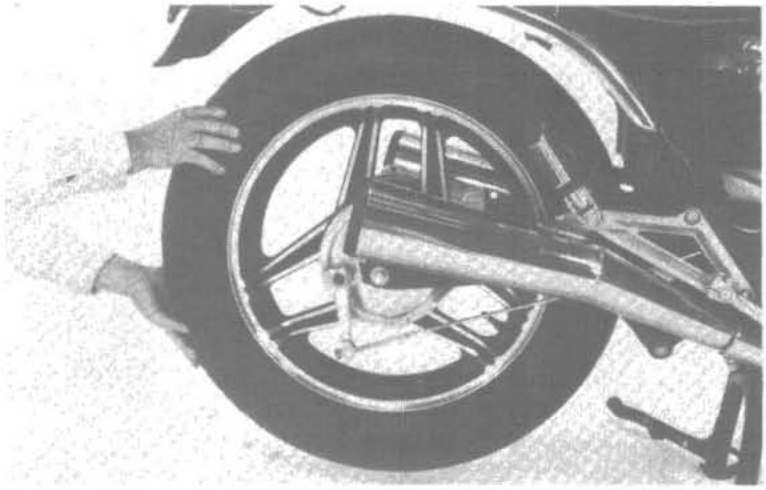

V45 SABRE:

Remove the seat.
Remove the valve cap and measure the rear shock absorber air pressure.

REAR SHOCK ABSORBER AIR PRESSURE:
14–57 psi (100–400 kPa, 1–4 kg/cm^2)

NOTE:

Check the air pressure when the rear shock absorber is cold.

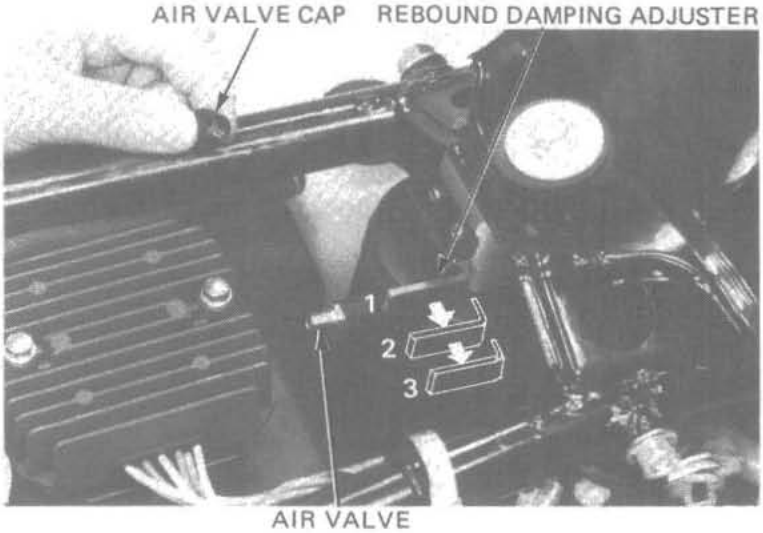

Adjust the rebound damping according to the following chart.

Recommended Rear Suspension Adjustment:

Rear Air Pressure	Rider/ Load	REBOUND DAMPING ADJUSTER	RIDING CON-DITIONS
14 psi (100 kPa, 1.0 kg/cm^2) ↓ 57 psi (400 kPa, 4.0 kg/cm^2)	One ↕ Up to vehicle capacity load	1	General or around town riding.
		2	Highway or winding road riding
		3	Rough road riding

Date of Issue: May, 1982

WHEELS

NOTE:

> Tire pressure should be checked when tires are COLD.

Check the tires for cuts, imbedded nails, or other sharp objects.

RECOMMENDED TIRES AND PRESSURES:

[ ] -- V45 MAGNA

		Front	Rear
Tire size		110/90-18 61H	130/90-17 68H [130/90-16 67H]
Cold tire pressure psi (kPa, kg/cm²)	Up to 90 kg (200 lbs) load	32 (225, 2.25)	32 (225, 2.25)
	90 kg (200 lbs) load to vehicle capacity load	32 (225, 2.25)	40 (280, 2.8)
Tire brand	BRIDGE-STONE	L303	G508
	DUNLOP	F11	K127C

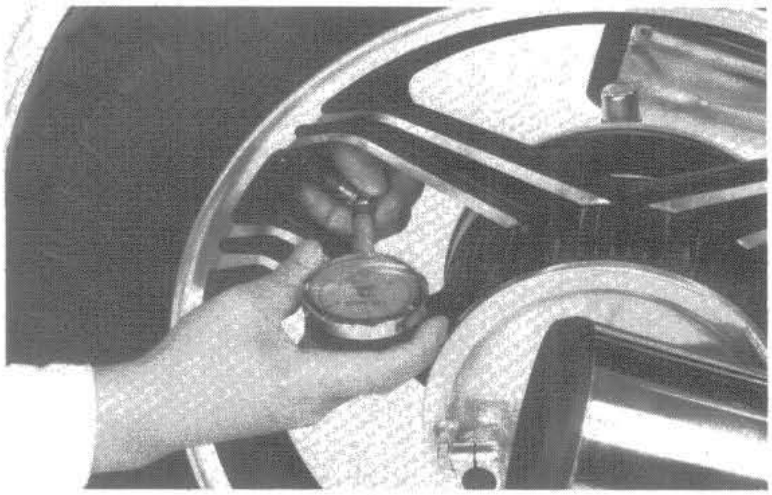

Check the front and rear wheels for trueness (page 15-21 and 17-5).
Measure the tread depth at the center of the tires. Replace the tires if the tread depth reaches the following limit:

Minimum tread depth:
Front: 1.5 mm (1/16 in)
Rear: 2.0 mm (3/32 in)

STEERING HEAD BEARINGS

NOTE:

> Check that the control cables do not interfere with handlebar rotation.

Raise the front wheel off the ground and check that the handlebar rotates freely.

If the handlebar moves unevenly, binds, or has vertical movement, adjust the steering head bearing by turning the steering head adjusting nut (page 16-38).

NUTS, BOLTS, FASTENERS

Check that all chassis nuts and bolts are tightened to their correct torque values (Section 1) at the intervals shown in the Maintenance Schedule (Pages 3-3 and 3-4).
Check all cotter pins, safety clips, hose clamps and cable stays.

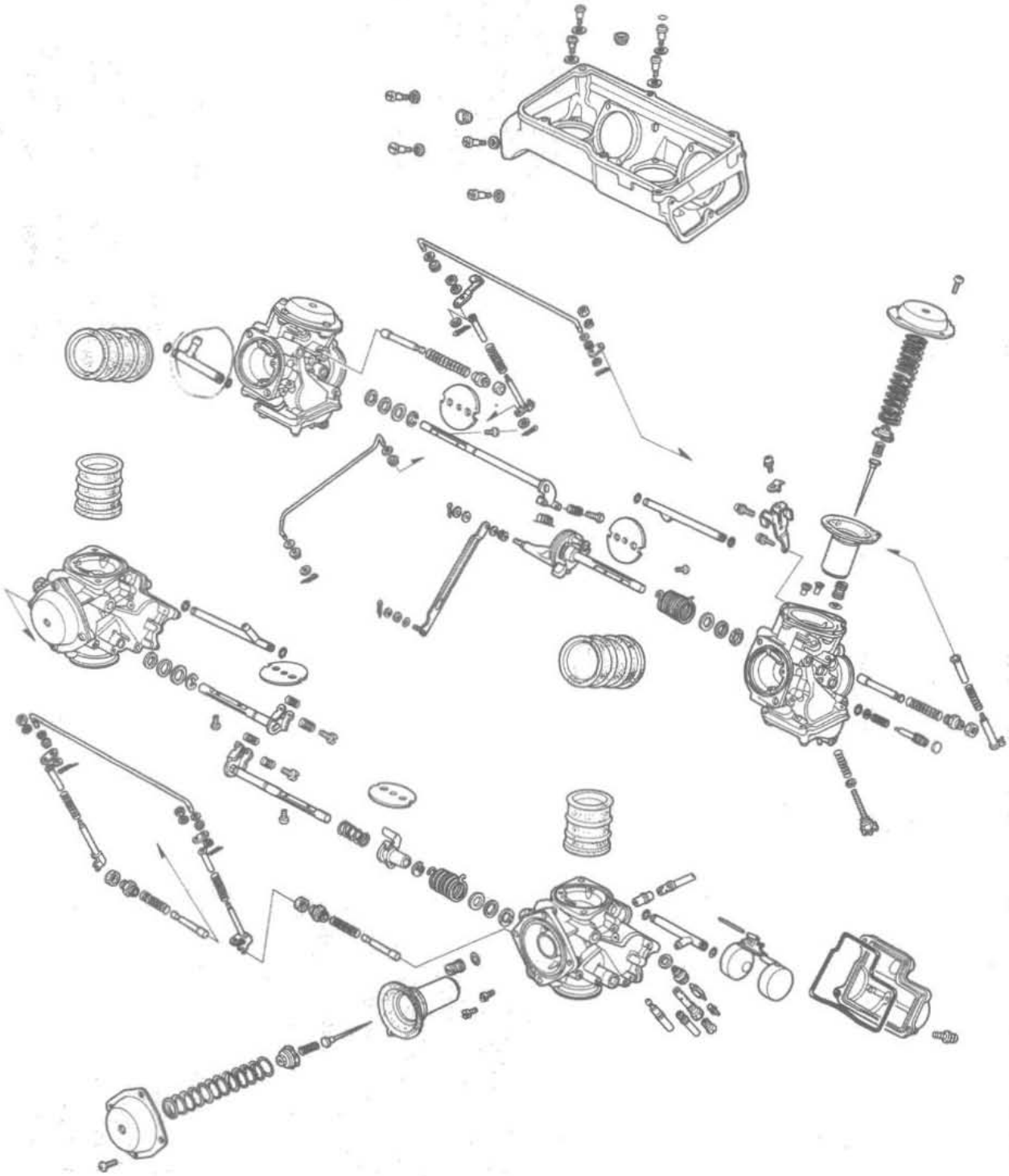

Date of Issue: January, 1982

4. FUEL SYSTEM

SERVICE INFORMATION

GENERAL

WARNING

Gasoline is extremely flammable and is explosive under certain conditions. Work in a well ventilated area. Do not smoke or allow flames or sparks in the work area.

- The front cylinders use down draft carburetors.
- When disassembling fuel system parts, note the locations of the O-rings. Replace them with new ones on reassembly.
- The float bowls have drain screws that can be loosened to drain residual gasoline.
- Fuel pump inspection is in section 21.
- The No. 1 and No. 3 carburetors use different jet needles (thinner) and shorter springs than the No. 2 and No. 4 carburetors (SABRE only). Do not interchange these parts.

TOOLS

Special

Hand vacuum pump/gauge	ST–AH–260–MC7 or A973X–041–XXXXX (U.S.A. only)
Valve guide driver, 7 mm	07942–8230000 (U.S.A. only)

Common

Float gauge	07401–0010001

SPECIFICATIONS

	V45 SABRE	V45 MAGNA
Venturi dia.	Primary 11.7 mm (0.46 in) Secondary 29.2 mm (1.15 in)	Primary 11.1 mm (0.44 in) Secondary 29.2 mm (1.15 in)
Identification No.	VD50A	VD51A
Float level	8.3 mm (0.33 in)	7.2 mm (0.28 in)
Main jet	# 132	# 128
Idle speed	1,000 ± 100 rpm	
Throttle grip free play	2–6 mm (0.08–0.24 in)	
Pilot screw initial opening	See page 4-18	

TROUBLESHOOTING

Engine cranks but won't start
1. No fuel in tank
2. No fuel to carburetor
3. Engine flooded with fuel
4. No spark at plug (ignition system faulty)
5. Air cleaner clogged
6. Intake air leak
7. Improper choke operation
8. Improper throttle operation

Hard starting or stalling after starting
1. Improper choke operation
2. Ignition malfunction
3. Carburetor faulty
4. Fuel contaminated
5. Intake air leak
6. Idle speed incorrect

Rough idle
1. Ignition system faulty
2. Idle speed incorrect
3. Incorrect carburetor synchronization
4. Carburetor faulty
5. Fuel contaminated

Misfiring during acceleration
1. Ignition system faulty

Backfiring
1. Ignition system faulty
2. Carburetor faulty

Poor performance (driveability) and poor fuel economy
1. Fuel system clogged
2. Ignition system faulty

Lean mixture
1. Clogged fuel jets
2. Piston stuck closed
3. Faulty float valve
4. Float level low
5. Fuel cap vent blocked
6. Fuel strainer screen clogged
7. Restricted fuel line
8. Air vent tube clogged
9. Intake air leak
10. Restricted or faulty fuel pump (V45 MAGNA)

Rich mixture
1. Clogged air jets
2. Faulty float valve
3. Float level too high
4. Choke stuck clogged
5. Dirty air cleaner

Date of Issue: January, 1982

CARBURETOR REMOVAL (V45 SABRE)

Turn the fuel valve OFF.
Remove the seat, frame side covers and fuel tank.
Remove the right and left air cleaner covers and the air cleaner elements.

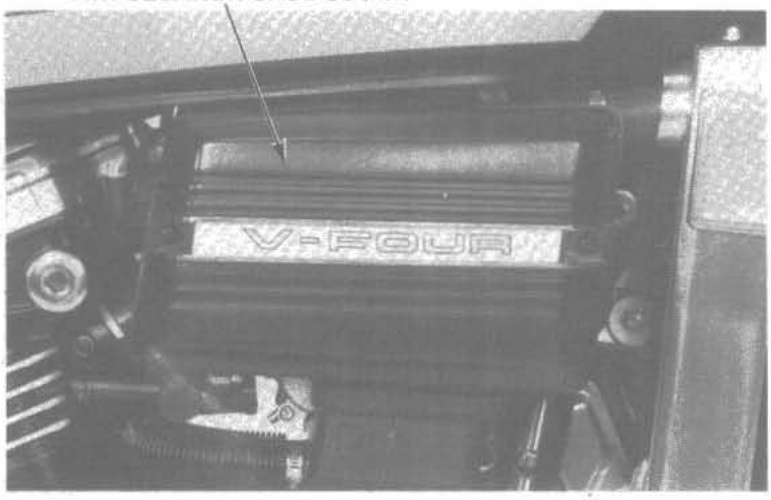

Remove both air cleaner case screws and air cleaner cases.

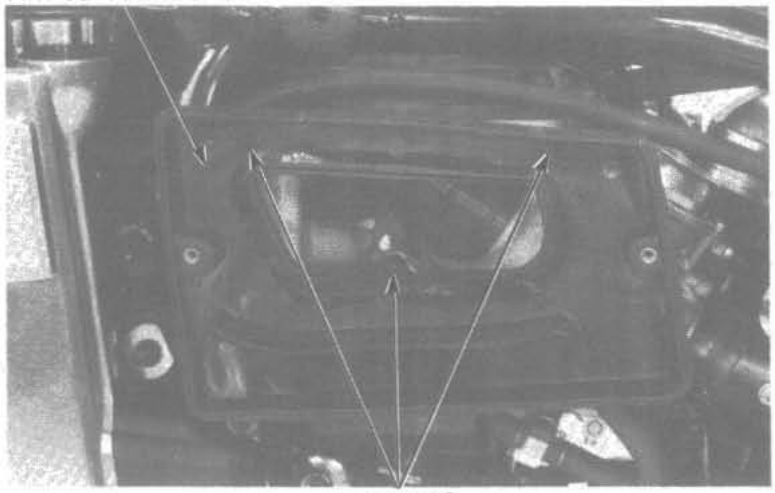

Remove the right ignition coil mounting bolts.
Remove the screw attaching the water pipe to the air chamber.
Remove the air chamber cover screws and cover.
Remove the radiator side mounting bolts.

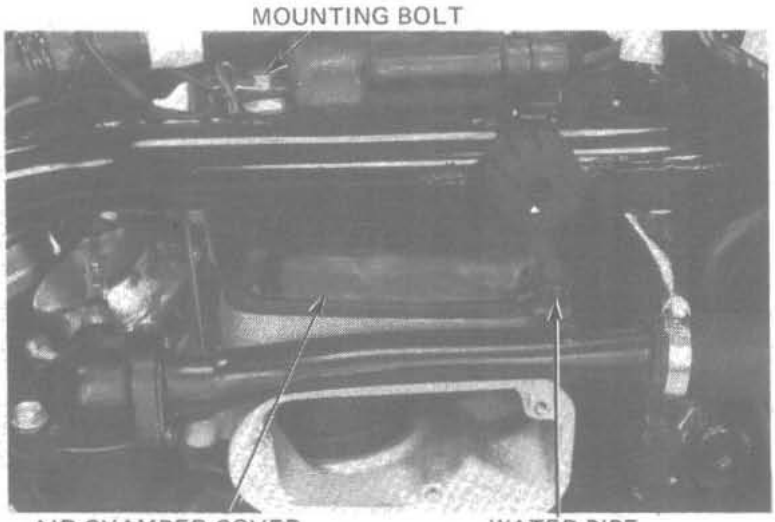

Remove the No. 1 carburetor intake pipe bands.
Remove the thermostat cover bolt and disconnect the ground cable.
Remove the temparature sensor wire.
Disconnect the air breather tube.

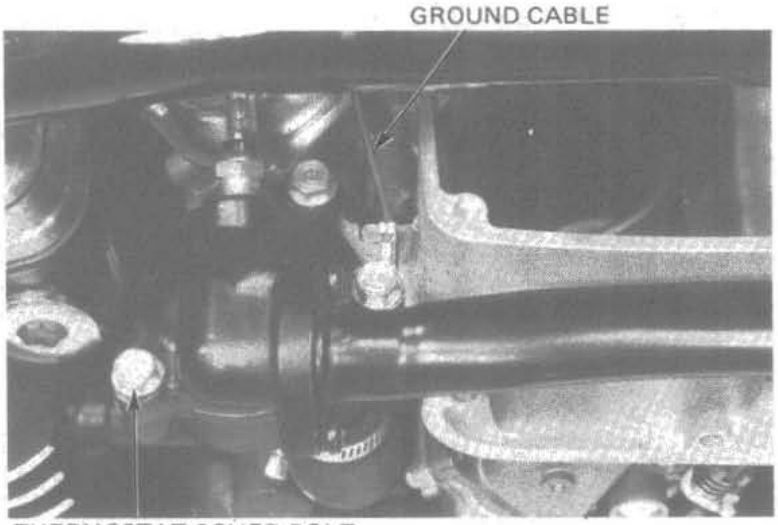

Loosen all the carburetor bands. Remove the carburetors from the intake pipes. Also, remove the No. 1 intake pipe from the cylinder head.
Disconnect the spark plug wire clamps on the heat shield.
Remove the carburetor assembly from the left side.

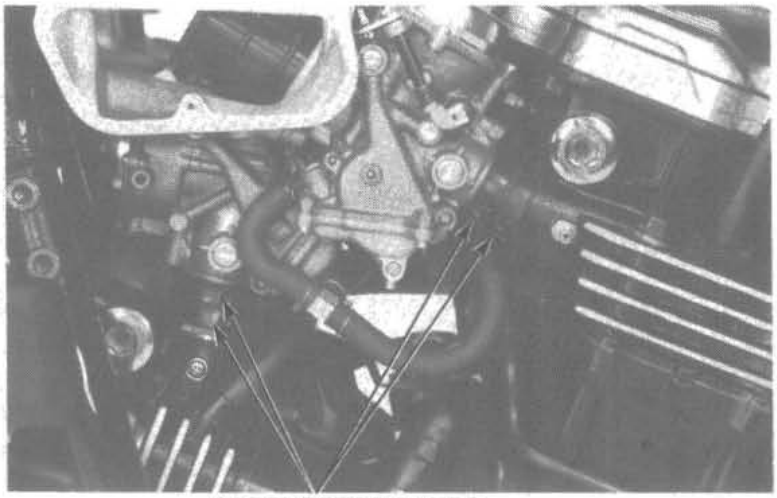

Remove the carburetor choke clamp and disconnect the choke and throttle cables.

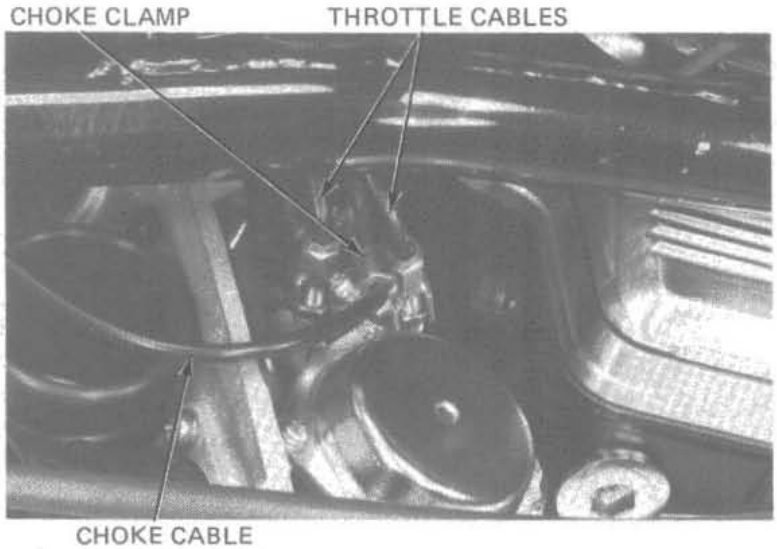

Date of Issue: October, 1982

CARBURETOR REMOVAL (V45 MAGNA)

Check that the fuel tank is at least one-half empty. Otherwise, drain the fuel tank until it is one-half empty before raising the tank.
Remove the seat and front fuel tank mounting bolts. Lift the fuel tank up and put the support arm down.
Remove the air cleaner cover and element.
Remove the air cleaner case mounting bolt and case.

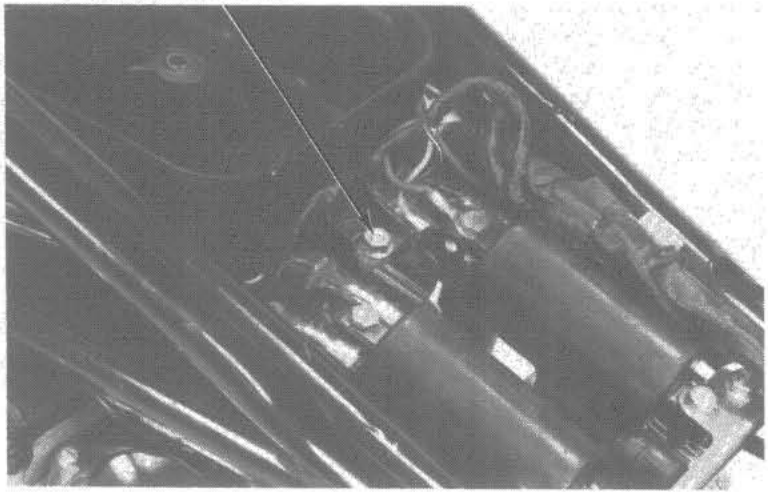

Loosen the air cleaner connecting bands and remove the air cleaner case.
Disconnect the spark plug lead clamps on the heat shield.

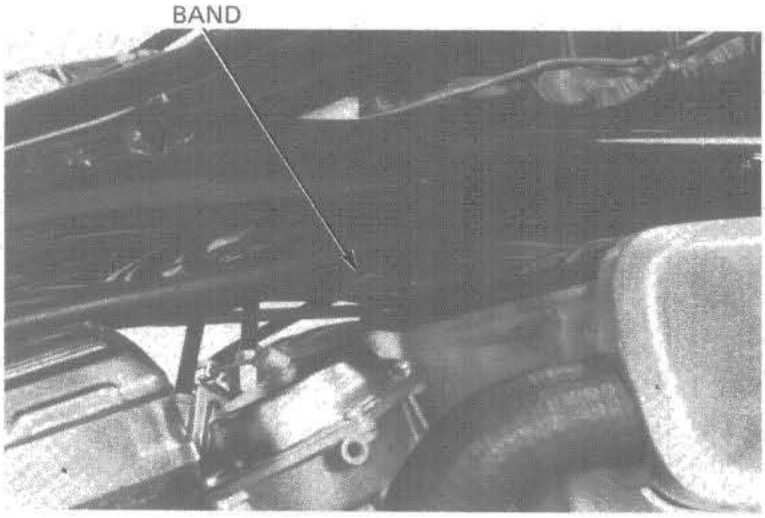

Remove the radiator right upper hose cover.
Remove the right and left air chamber covers.
Drain and remove the radiator (page 6-8).
Loosen the clamps on the Nos. 1, 3 and Nos. 2, 4 cylinder coolant crossover pipes. Remove the crossover pipes.

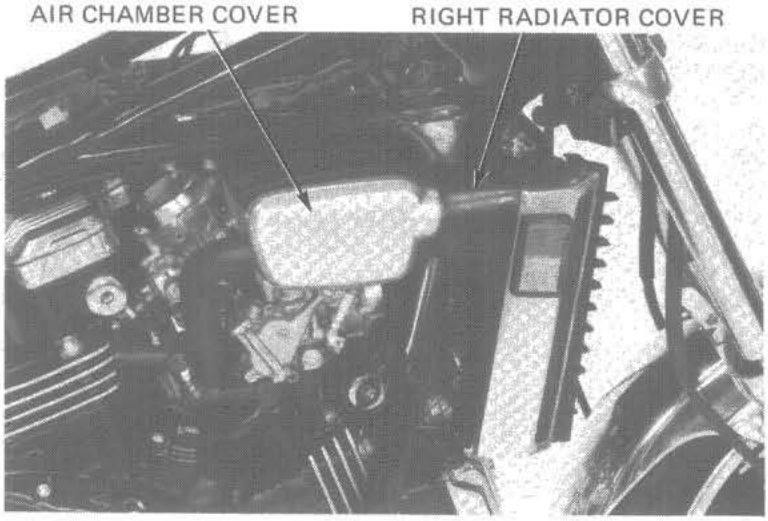

Remove the air chamber top cover.
Remove the bolt attaching the thermostat housing to the air chamber and the ground cable. Remove the thermostat housing and coolant hoses.
Remove the temperature sensor wire.
Disconnect the breather tube and loosen the carburetor bands.
Remove all the No. 1 and No. 3 carburetor intake pipe bands.
Loosen the No. 2 and No. 4 carburetor intake pipe bands, on the carburetor side only.
Remove the carburetor assembly from the intake pipes.
Remove the No. 1 and No. 3 intake pipes from the cylinder head.
Remove the carburetor choke clamp and disconnect the choke and throttle cables.
Remove the carburetor assembly from the right side.

NOTE:

> It may be necessary to loosen the engine mount bolts and move the engine on its rubber mounts to provide clearance for carburetor removal.

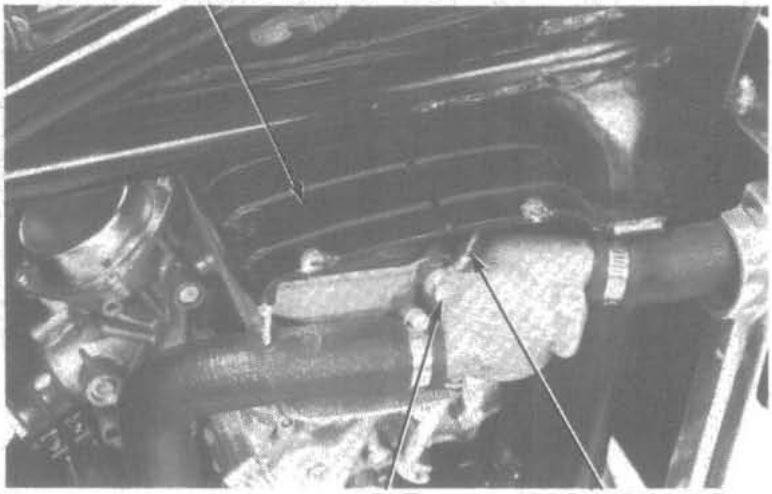

VACUUM CHAMBER

REMOVAL

Remove the four vacuum chamber cover screws and cover.

CAUTION

> *Do not interchange vacuum chamber covers, springs pistons or jet needles between carburetors.*

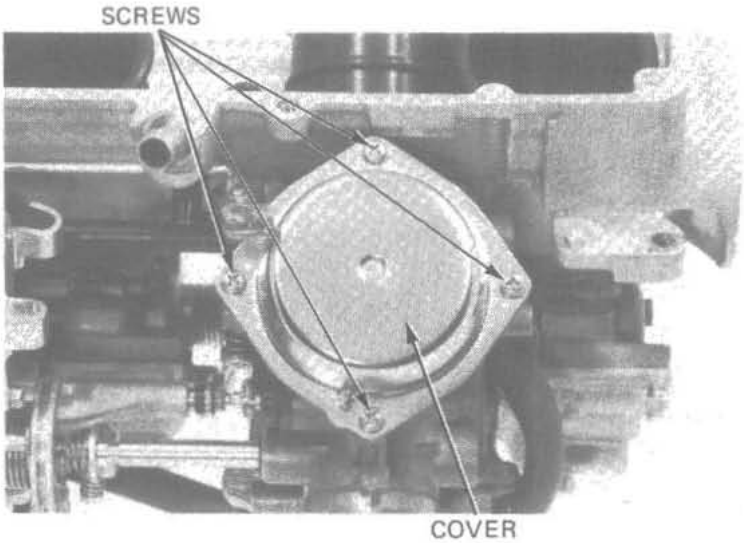

Remove the compression spring, diaphragm and vacuum piston.
Inspect the vacuum piston for wear, nicks, scratches or other damage.
Make sure the piston moves up and down freely in the chamber.
Note that the No. 1 and No. 3 carburetors use thinner jet needles and shorter springs than the No. 2 and No. 4 carburetors (SABRE only).

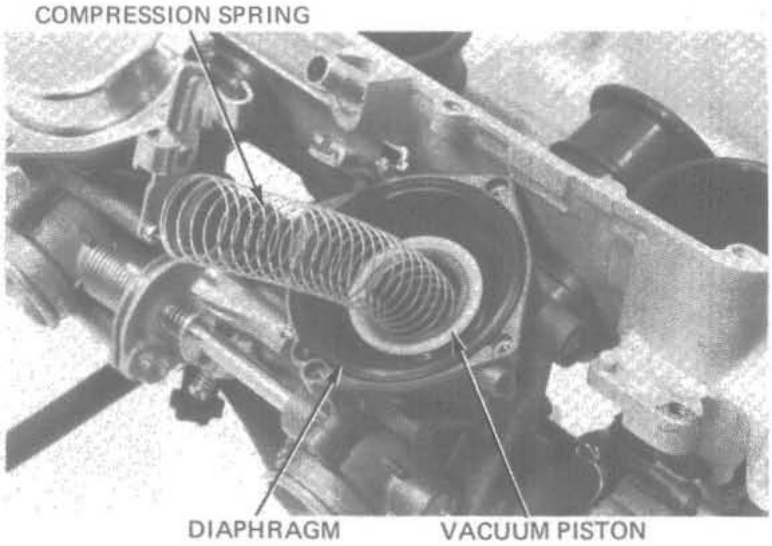

Push the needle holder in and turn it 60 degrees with an 8 mm socket. Then remove the needle holder, spring and needle from the piston.

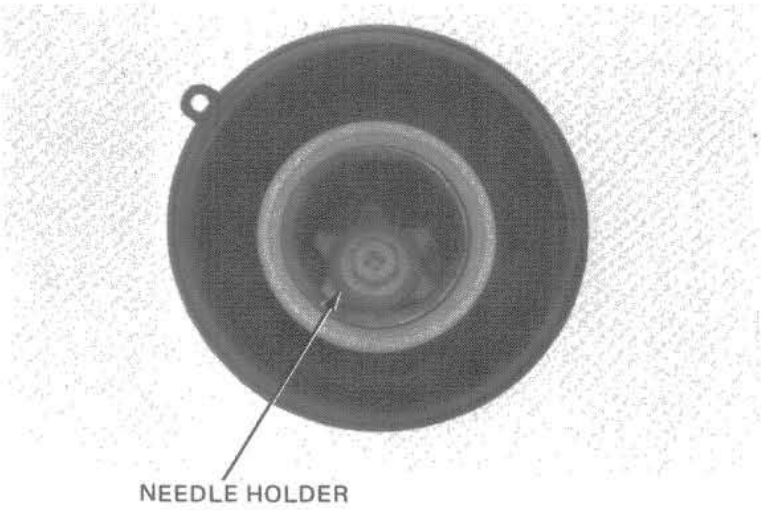

Inspect the needle for excessive wear at the tip and for bending, or other damage.

Check the diaphragm for deterioration and tears.

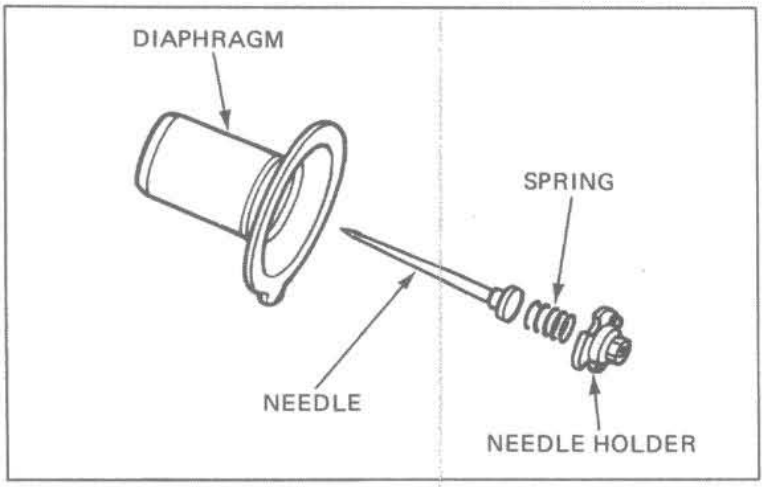

INSTALLATION

Installation is essentially the reverse of removal.
Install the chamber cover so that its cavity aligns with the hole in the diaphragm.
Be sure the thinner jet needles and shorter springs are installed in the No. 1 and No. 3 carburetors.

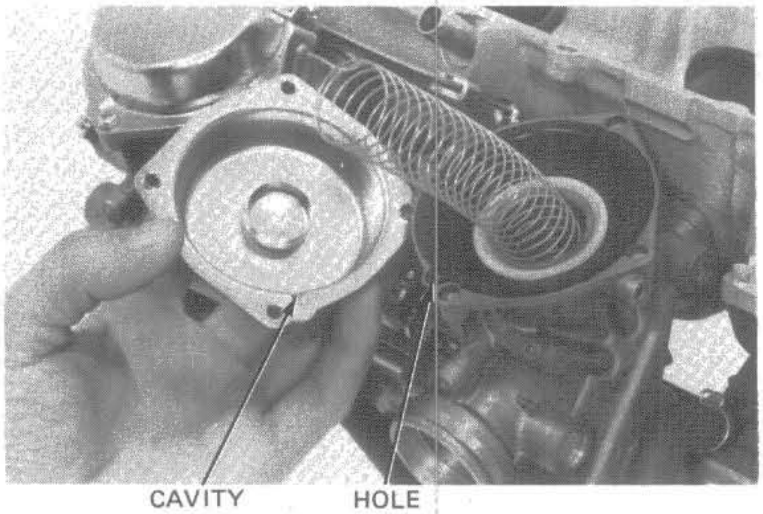

FLOAT CHAMBER

REMOVAL

Remove the four float chamber screws and the float chamber.

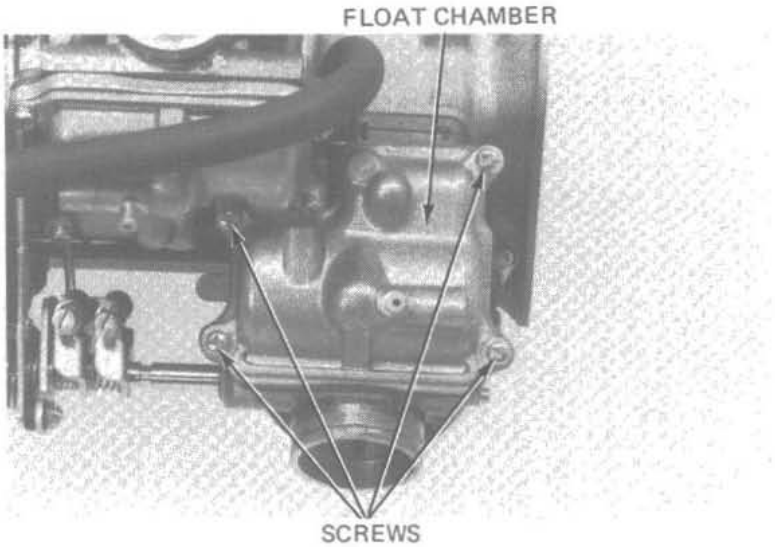

FLOAT LEVEL

Measure the float level with the carburetor inclined 15°–45° from vertical and the float tang just contacting the float valve.

Specification:
V45 Magna–7.2 mm (0.28 in)
V45 Sabre–8.3 mm (0.33 in)

NOTE:

Measure the float nearst the float valve.

Adjust the float level by carefully bending the float tang.

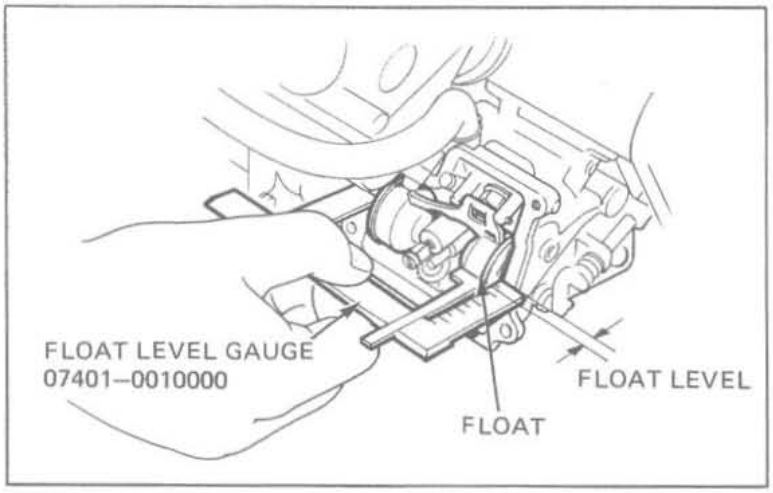

FLOAT AND JETS

Remove the float pin, float and float valve.

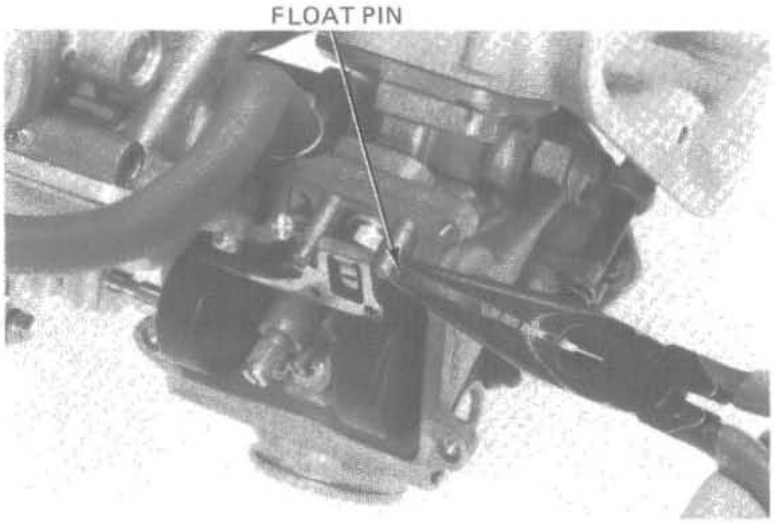

Inspect the float valve for grooves and nicks.
Inspect the operation of the float valve.

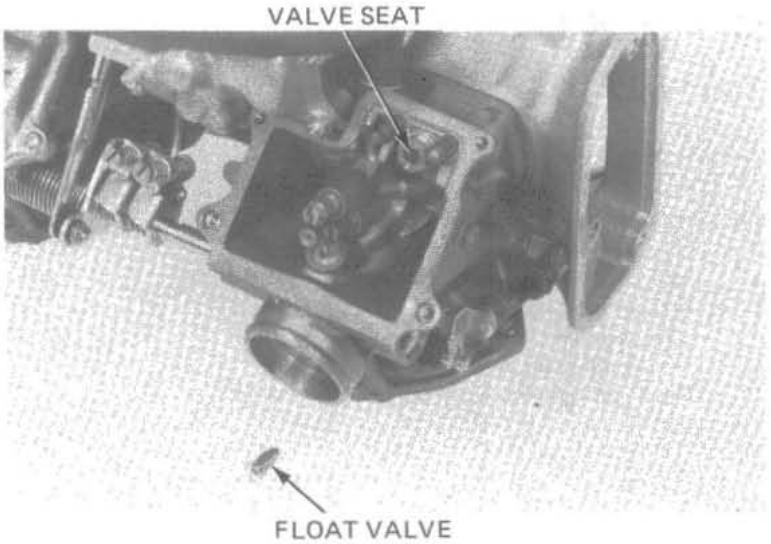

Remove the starter jet, main jet and slow jet.
Remove the float valve seat and filter.

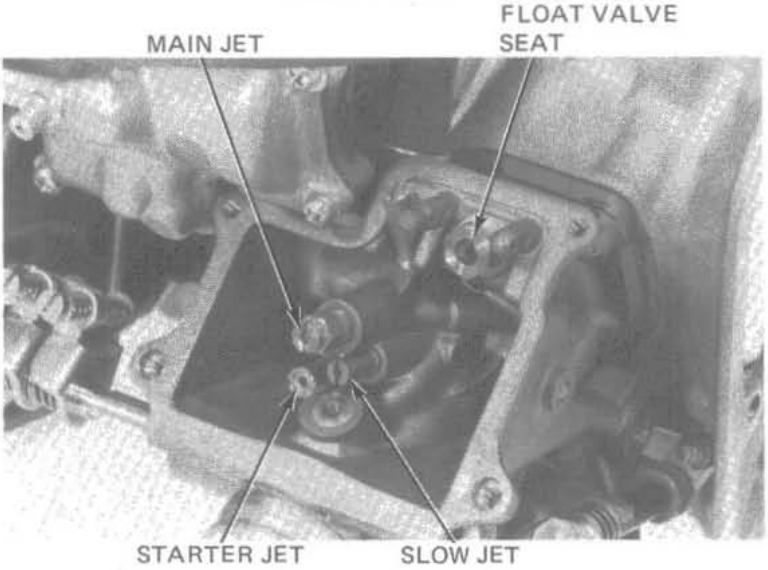

Inspect the float valve seat and filter for grooves, nicks or deposits.

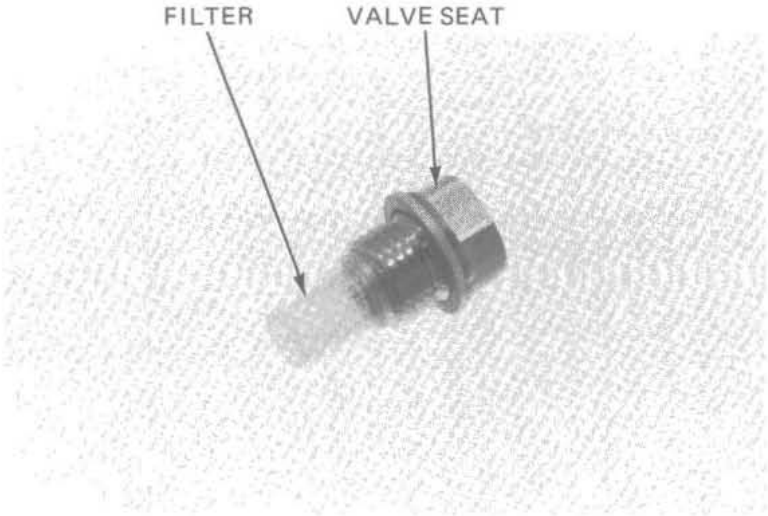

ASSEMBLY

Assemble the float chamber components in the reverse order of disassembly.

PILOT SCREW

REMOVAL

NOTE:

- The pilot screws are factory pre-set and should not be removed unless the carburetors are overhauled.
- The pilot screw plugs are factory installed to prevent pilot screw misadjustment. Do not remove the plugs unless the pilot screws are being removed.
- Cover all opening with tape to keep metal particles out when the plugs are drilled.

Center punch the pilot screw plug to center the drill point.
Drill through the plug with a 4 mm (5/32 in) drill bit, being careful not to drill into the pilot screw.

CAUTION:

Be careful not to drill into the pilot screw. All pilot screws must be replaced even if only one requires it for proper pilot screw adjustment (page 4-18).

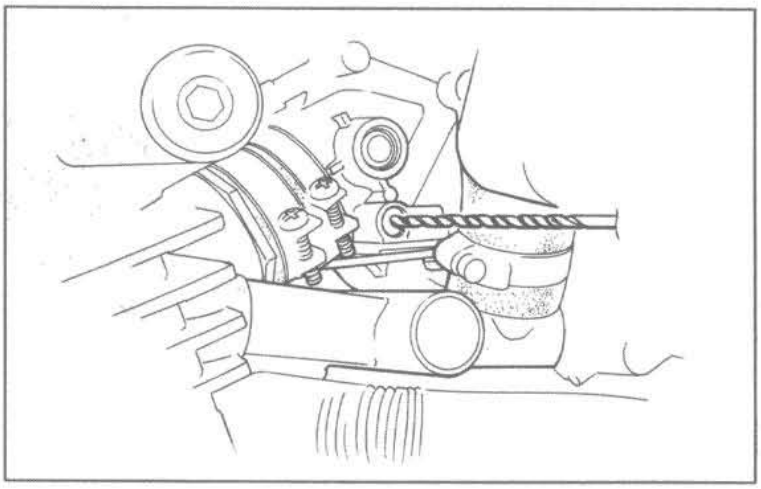

Force a self-tapping 4 mm screw (H/C 069399, P/N 93903–35410) into the drilled plug and continue turning the screwdriver until the plug rotates with the screw.
Pull on the screw head with pliers to remove the plug.
Use compressed air to clean the pilot screw area and remove metal shavings.

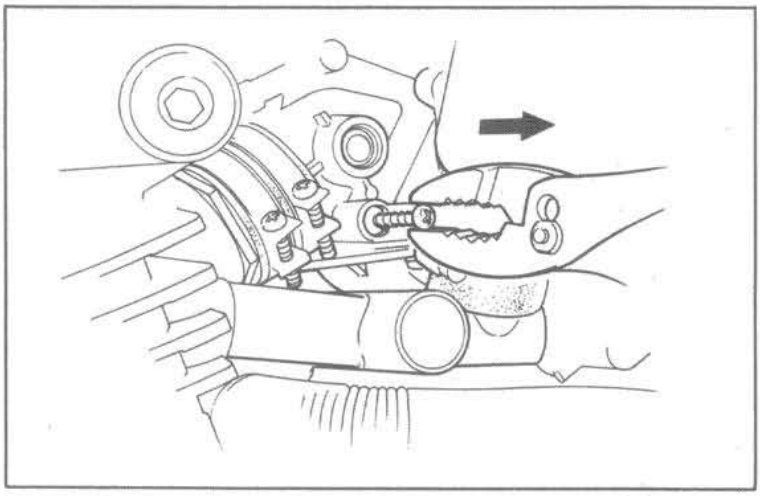

Date of Issue: May, 1982

Turn each pilot screw in and carefully count the number of turns before it seats lightly.
Make a note of this to use as a reference when reinstalling the pilot screws.

CAUTION

Damage to the pilot screw seat will occur if the pilot screw is tightened against the seat.

Remove the pilot screws and inspect them. Replace them if they are worn or damaged.

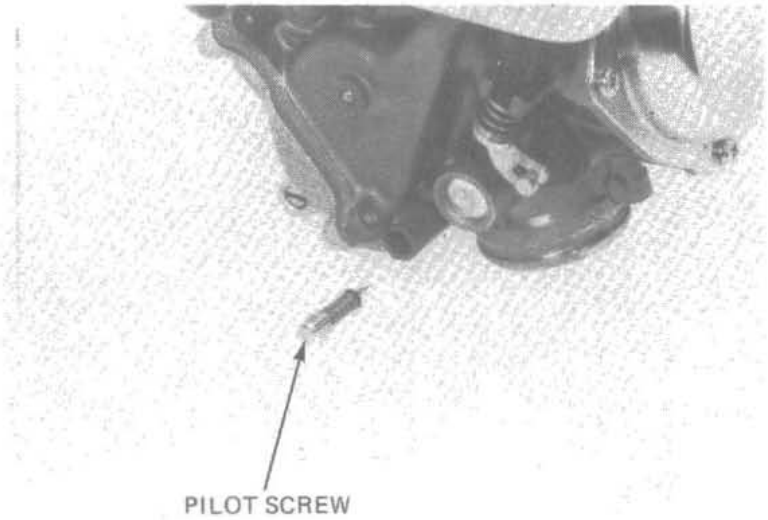

INSTALLATION

Install the pilot screws and return them to their original position as noted during removal.
Perform pilot screw adjustment if new pilot screws are installed (page 4-18).

NOTE

- Do not install new plugs on new pilot screw holes until after adjustment has been made.
- If you replace the pilot screw in one carburetor, you must replace the pilot screws in the other carburetors for proper pilot screw adjustment.

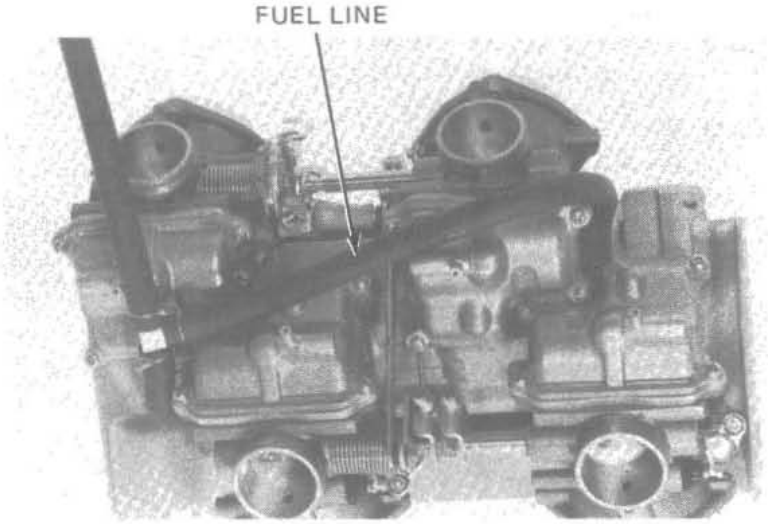

CARBURETOR SEPARATION

Remove the fuel lines from the carburetors.

Remove the screws attaching the air chamber to the carburetors and separate the chamber and carburetors.

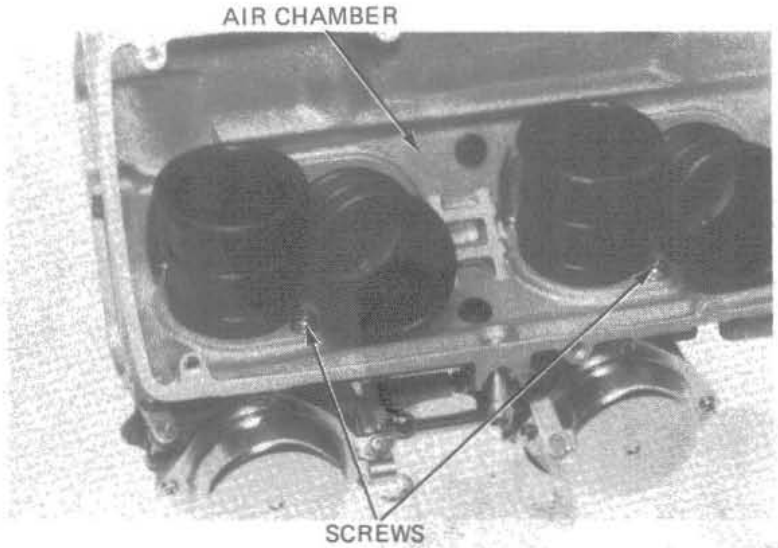

Remove the choke rod cotter pins and remove the choke rods.

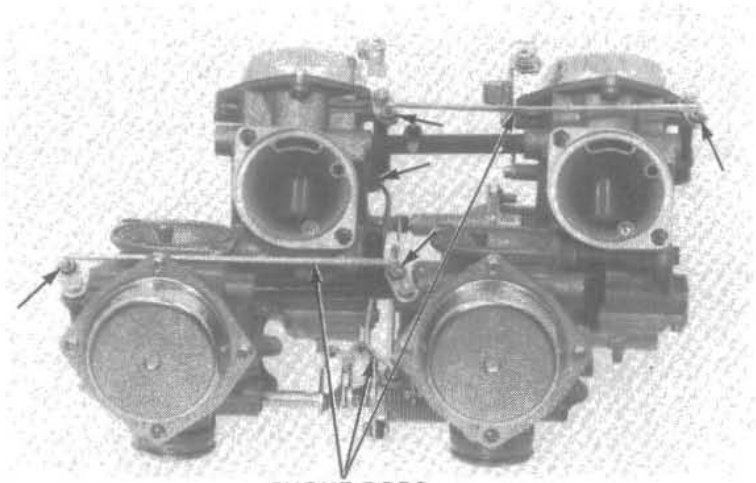

Carefully separate the No. 3 carburetor from the assembly. Then separate the No. 4 carburetor.

CAUTION

Separate the carburetors horizontally to prevent damage to the joint pipes.

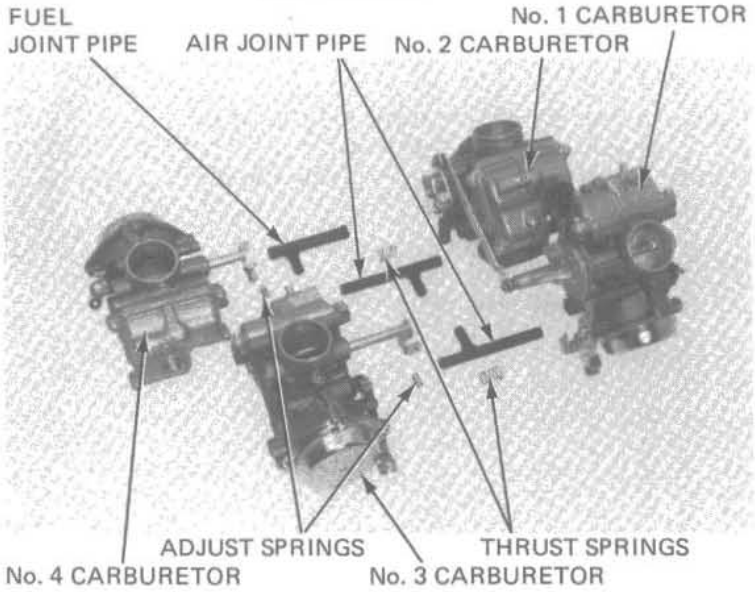

Disconnect the throttle link from the No. 1 and 2 carburetors by removing the cotter pins.

Carefully separate the No. 1 and No. 2 carburetors.

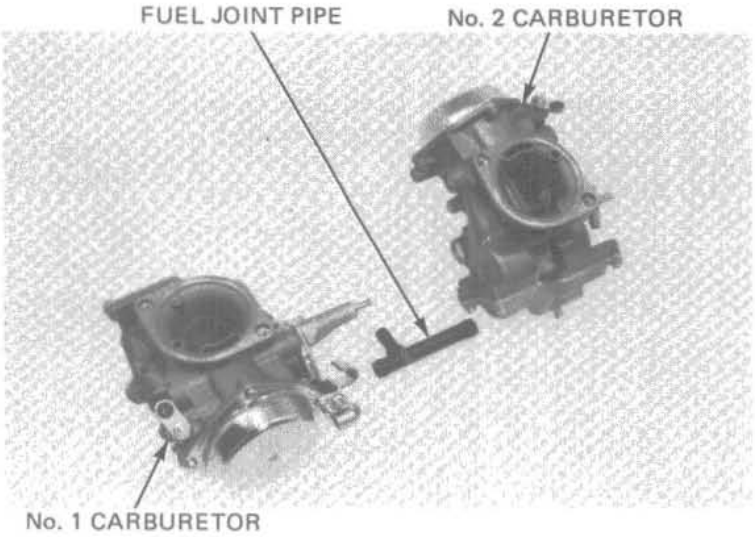

Remove the choke lever from the carburetor.
Remove the choke valve nut, spring and valve.

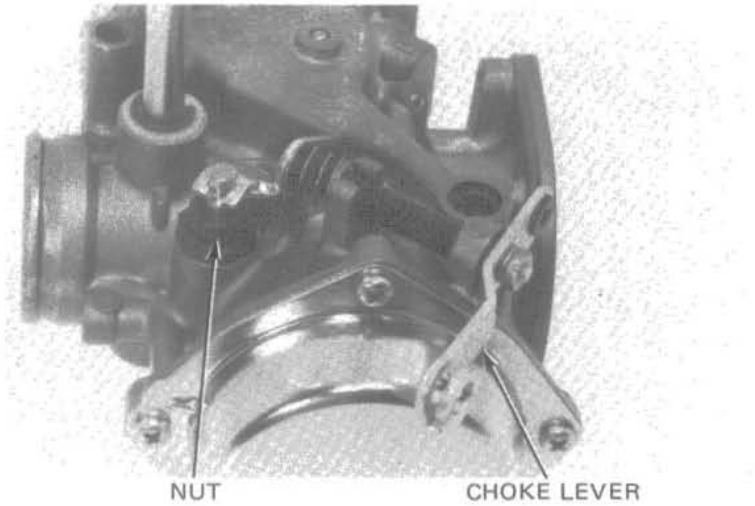

Check the choke valve and spring for nicks, grooves, or other damage.

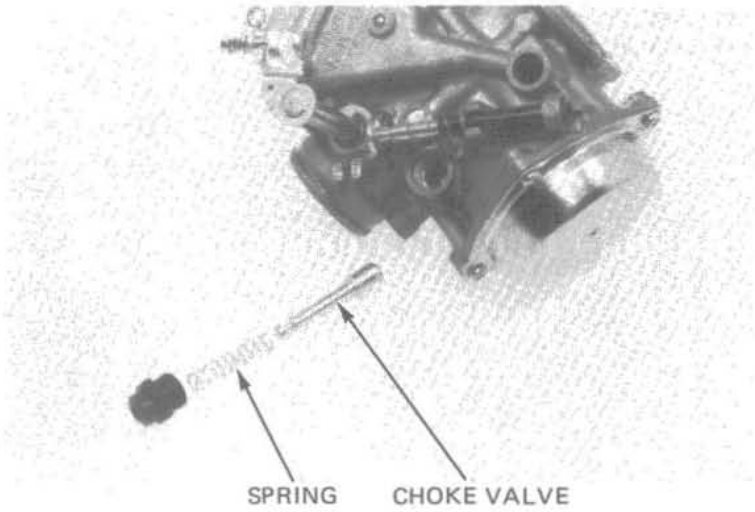

CARBURETOR ASSEMBLY

Install the choke valve, valve spring and nut and tighten the nut while hooking the choke arm to the groove in the valve.
Install the choke lever.

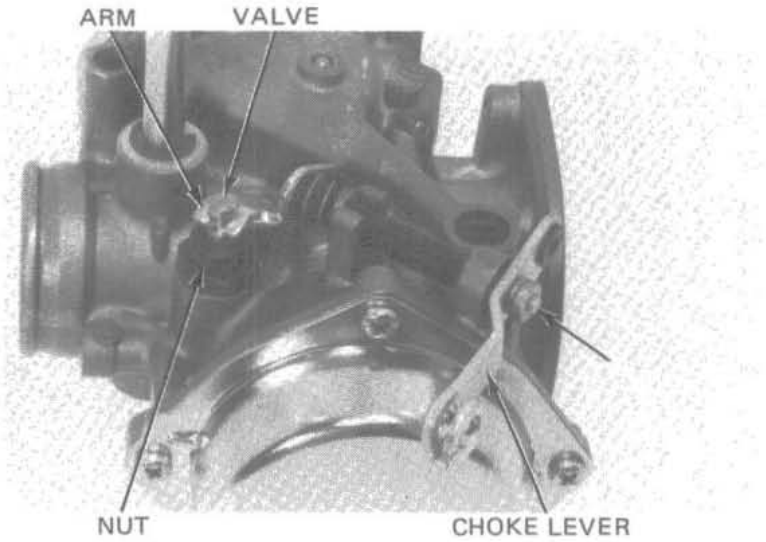

Coat the new O-rings with oil and install them on the fuel joint pipe for No. 1 and No. 2 carburetors.
Install the fuel joint pipe to the No. 1 and No. 2 carburetors.

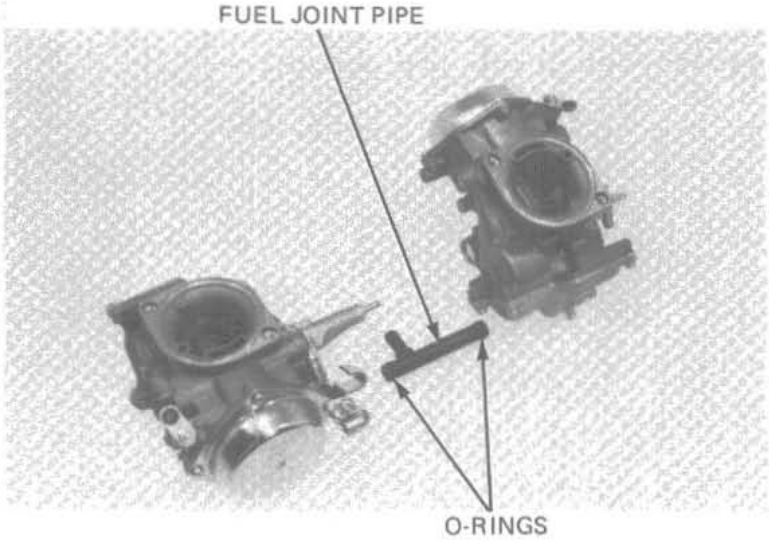

Reconnect the throttle linkage between the No. 1 and No. 2 carburetors, using new cotter pins.

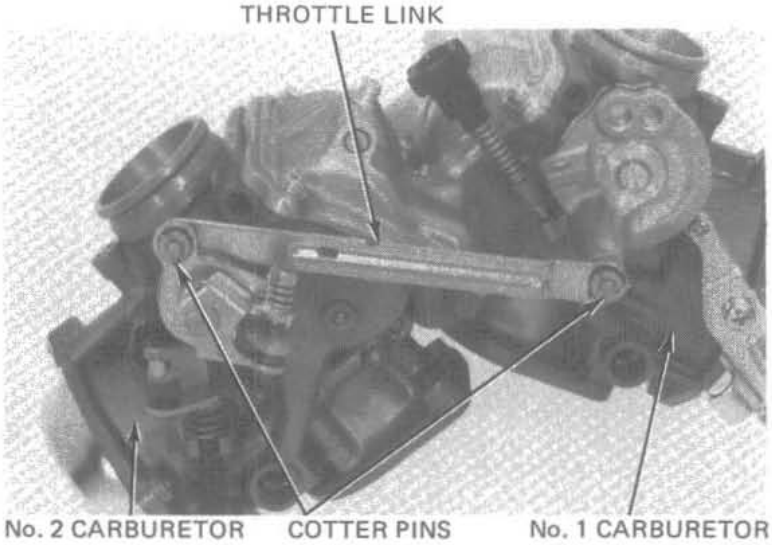

Date of Issue: January, 1982

Coat new O-rings with oil and install them on the fuel and air joint pipes.
Put the No. 3 and No. 4 carburetors together with the joint pipes.

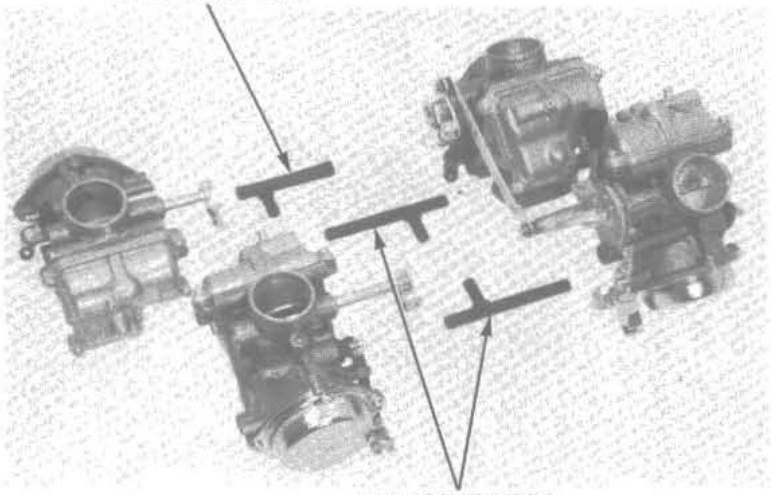

Loosen the synchronization adjusting screws until there is no tension.
Install the synchronization springs.
Install the thrust springs between the throttle valve shafts.

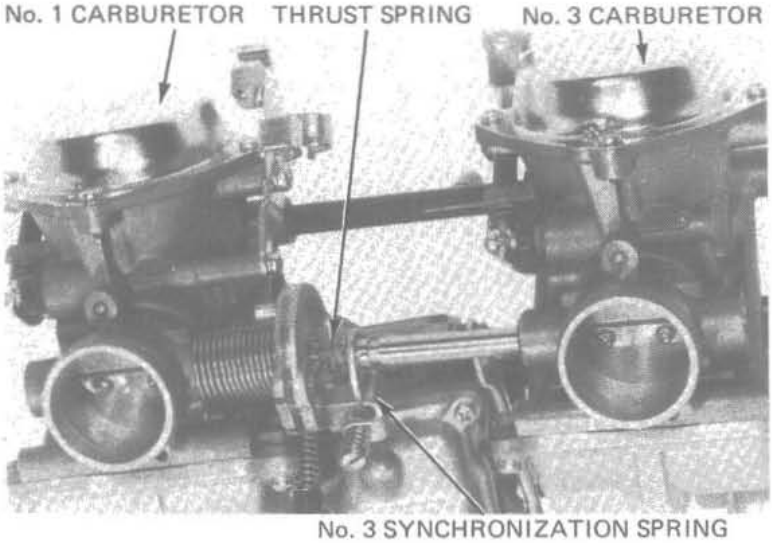

Make sure the fuel joint and air joint pipes are securely installed.

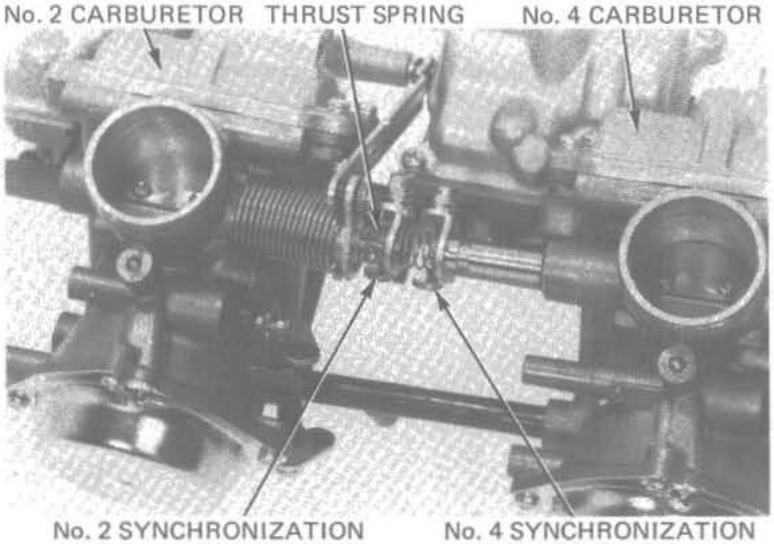

Install the choke rods, using new cotter pins.

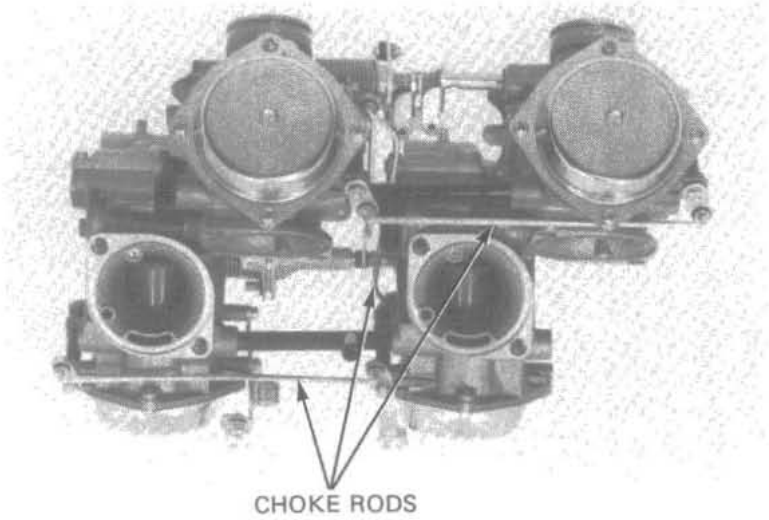

Make sure the air chamber funnels, grommets and dowel pins are in place.

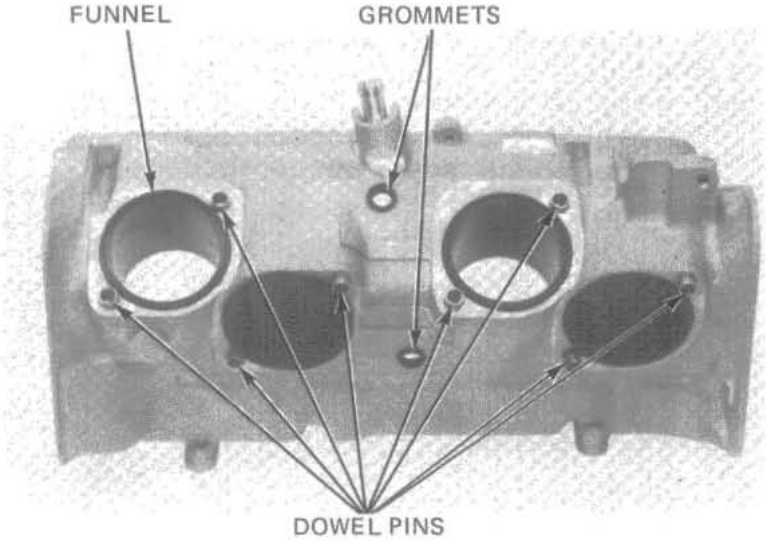

Place the air chamber over the carburetors aligning the dowel pins with the carburetor holes.
Attach the air chamber to the carburetors with the eight screws.
Connect the fuel lines to the fuel joint pipes.

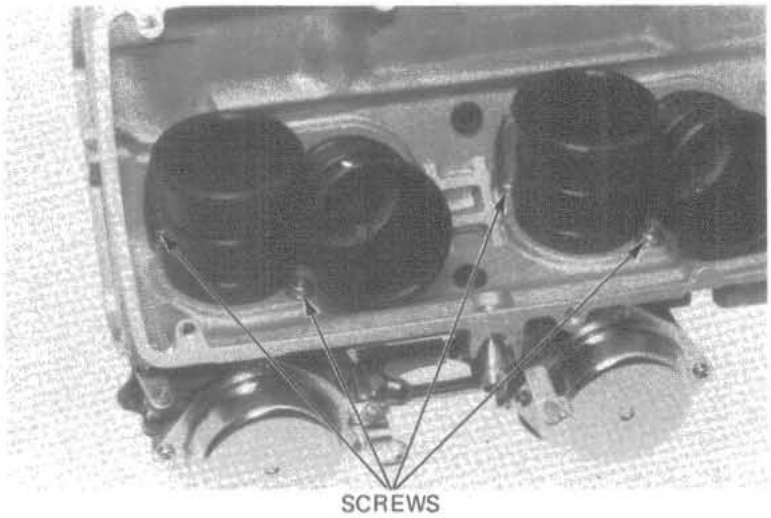

Turn the throttle stop screw to align the No. 1 throttle valve with the edge of the by-pass hole.

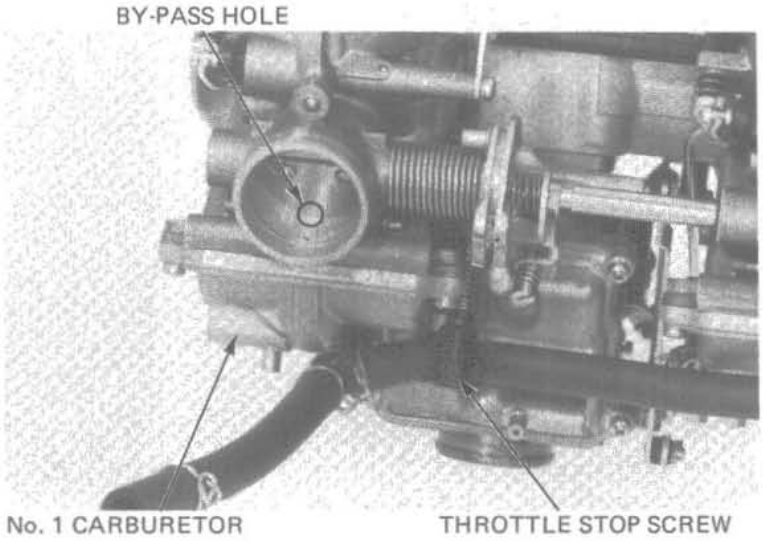

Align each throttle valve with the by-pass hole edge by turning the synchronization adjusting screws.

Inspect throttle operation as described below:

- Open the throttle slightly by pressing the throttle linkage. Then release the throttle.
- Make sure that it returns smoothly.
- Make sure that there is no drag when opening and closing the throttle.

Make sure that choke valve operation is smooth by moving the choke linkage.

Close the choke valve by turning the choke linkage. Release the choke linkage and make sure that it returns smoothly.

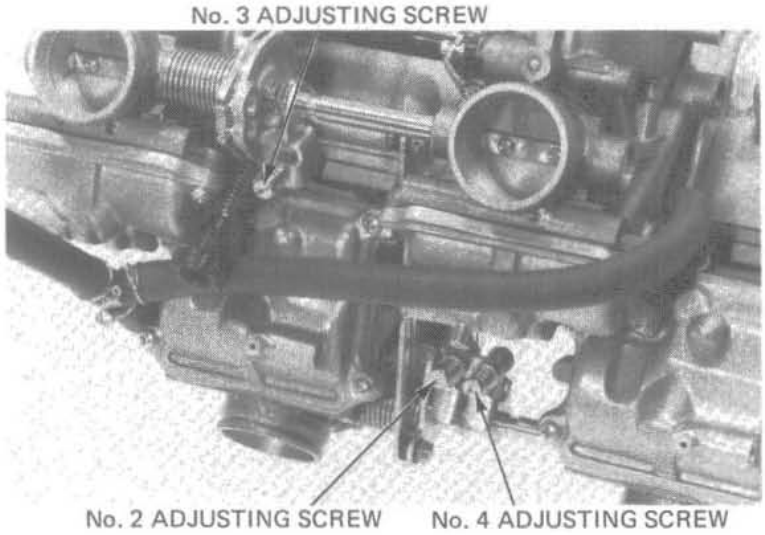

CARBURETOR INSTALLATION

Installation is essentially the reverse of removal.

NOTE

Route the throttle and choke cables properly (page 1–9 to 1–10).

Perform the following inspections and adjustments.

- Throttle operation (page 3-6).
- Carburetor choke (page 3-7)
- Carburetor idle speed (page 3-13)
- Carburetor synchronization (page 3-12).

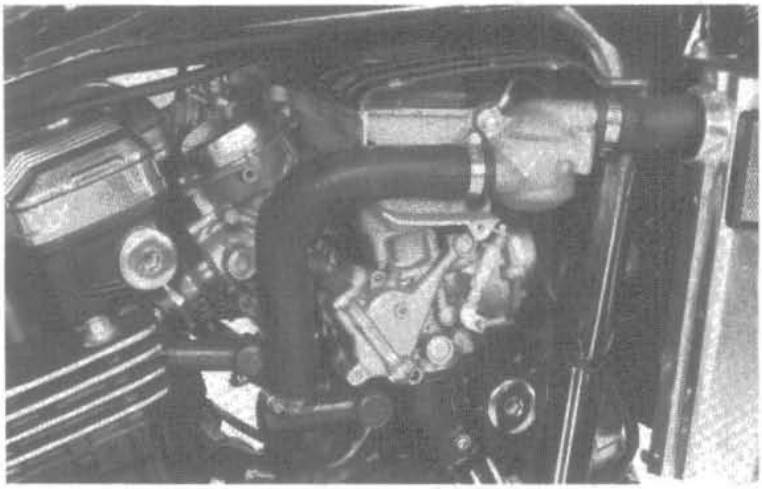

PILOT SCREW ADJUSTMENT

IDLE DROP PROCEDURE (U.S.A. ONLY)

NOTE

- The pilot screws are factory pre-set and no adjustment is necessary unless the pilot screws are replaced (page 4-10).
- Use a tachometer with graduations of 50 rpm or smaller that will accurately indicate a 50 rpm change.

1. Turn each pilot screw clockwise until it seats lightly and back it out to the specification given. This is an initial setting prior to the final pilot screw adjustment.

   INITIAL OPENING: 2-3/4 turns out

   CAUTION:

   Damage to the pilot screw seat will occur if the pilot screw is tightened against the seat.

2. Warm up the engine to operating temperature. Stop and go driving for 10 minutes is sufficient.
3. Attach a tachometer according to the manufacturer's instructions.
4. Adjust the idle speed with the throttle stop screw.

   IDLE SPEED: 1,000 ± 100 rpm

5. Turn each pilot screw 1/2 turn out from the initial setting.
6. If the engine speed increases by 50 rpm or more, turn each pilot screw out by a continual 1/2 turn until engine speed drops by 50 rpm or less.
7. Adjust the idle speed with the throttle stop screw.
8. Turn the No. 1 carburetor pilot screw in until the engine speed drops 50 rpm.
9. Turn the No. 1 carburetor pilot screw 1 turn out from the position obtained in step 8.
10. Adjust the idle speed with the throttle stop screw.
11. Perform steps 8, 9 and 10 for the No. 2, 3 and 4 carburetor pilot screws.
12. Drive new pilot screw plugs into the pilot screw bores with a 7 mm valve guide driver (P/N 07942 –8230000). When fully seated the plug surfaces will be recessed 1 mm into the pilot screw bore.

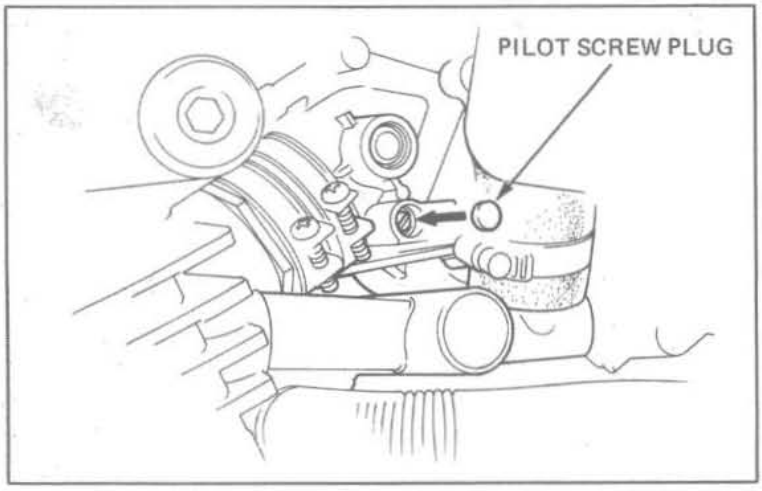

Date of Issue: January, 1982

FUEL TANK

WARNING

Do not allow flames or sparks near gasoline. Wipe up spilled gasoline at once.

Check the vent hole of the filler cap for blockage. Check that fuel is flowing out of the fuel valve freely. If fuel flow is restricted, clean the fuel strainer.

NOTE

Do not overtighten the fuel valve lock nut (V45 SABRE).

Make sure that there are no fuel leaks.

V45 SABRE

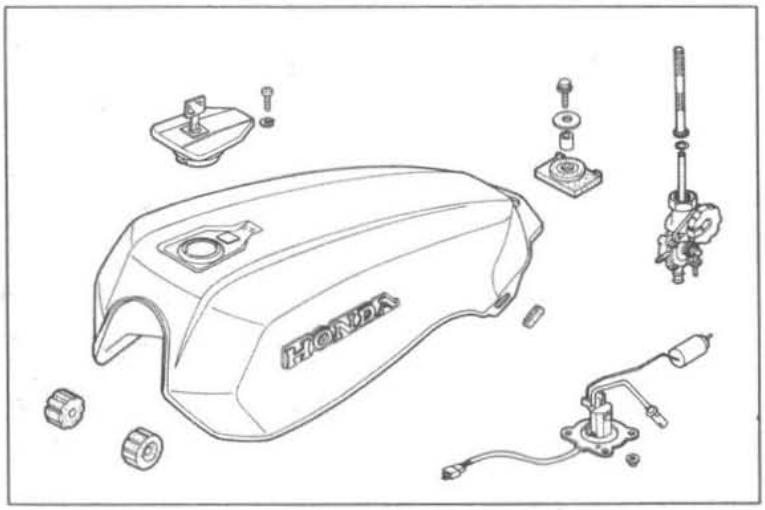

V45 MAGNA

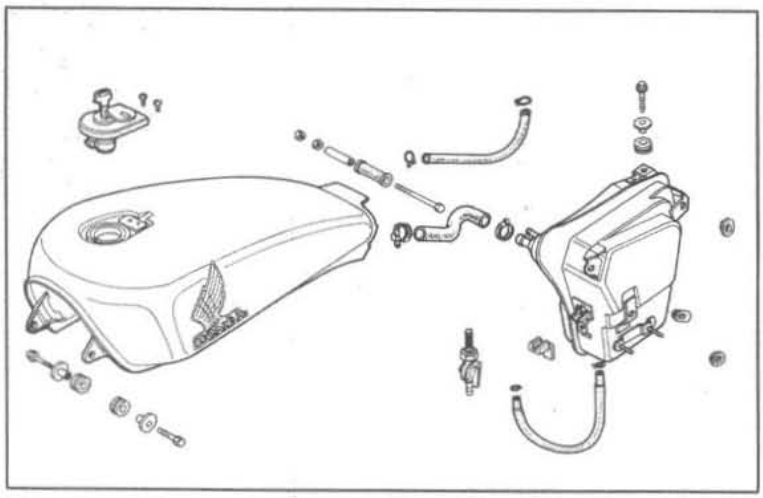

AUXILIARY FUEL TANK (V45 MAGNA)

Remove the seat, main fuel tank and side covers.
Remove the regulator/rectifier.
Disconnect the battery negative cable, then positive cable and remove the battery.
Remove the rear wheel (page 17-3).
Remove rear fenders A and B.
Detach the auxiliary fuel tank hose from the fuel pump.
Remove the auxiliary fuel tank mounting bolt and tank.
Install the auxiliary fuel tank in the reverse order of removal.

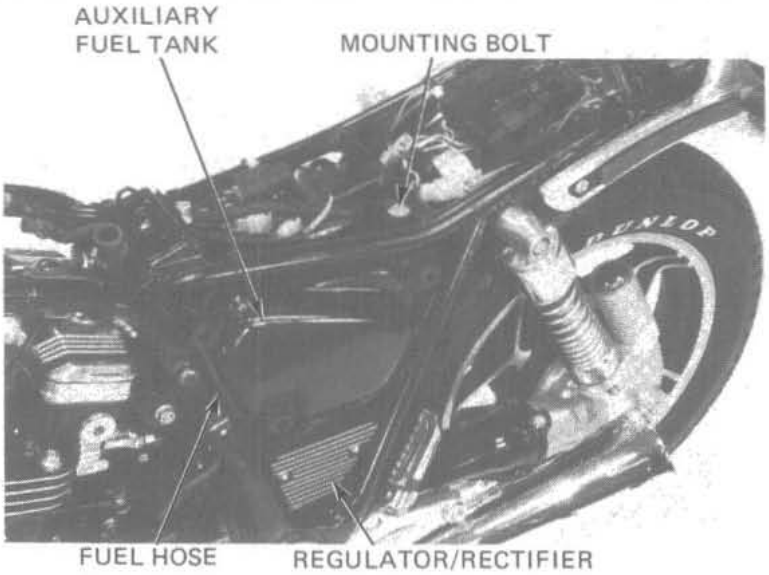

AUTOMATIC FUEL VALVE (V45 SABRE)

WARNING

Do not allow flames or sparks near gasoline. Wipe up spilled gasoline at once.

Turn the manual valve ON.
Stop the engine and place a container under the fuel line.
Remove the fuel tube from the carburetor.
Inspect the fuel tube for fuel flowing out.
Drain the remaining fuel in the fuel valve and fuel tube (approx. 5–10 cc).
If the fuel flow stops, the automatic fuel valve is operating normally. If the fuel flow does not stop, clean the vacuum tube.

Disconnect the vacuum tube from the intake port and apply vacuum with a vacuum pump.
The valve is operating normally if fuel flows out of the tube when vacuum is applied and fuel stops flowing out when the vacuum pump is disconnected.

If the valve does not operate normally:

- Inspect for clogging and clean the valve.
- Blow air through the valve from the inlet side to set the flat diaphragm in its original position.

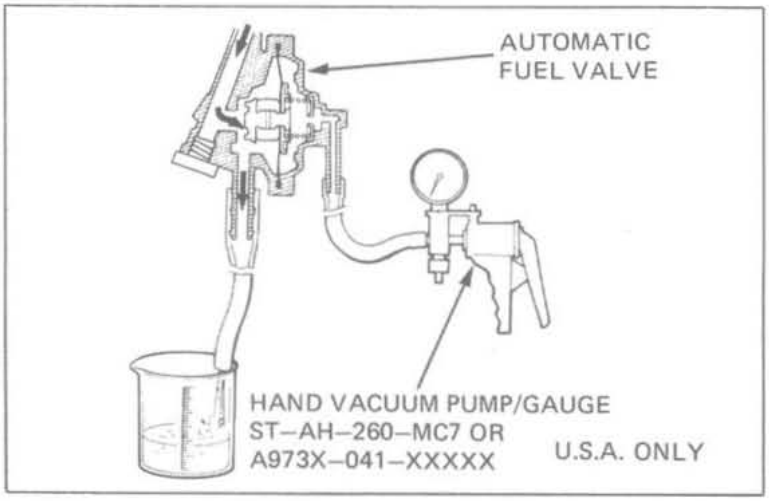

Date of Issue: May, 1982

AIR CLEANER

CASE/CHAMBER

Check the air cleaner case for deterioration.

CRANKCASE VENTILATION SYSTEM

Check that the breather tube is not restricted.

V45 SABRE

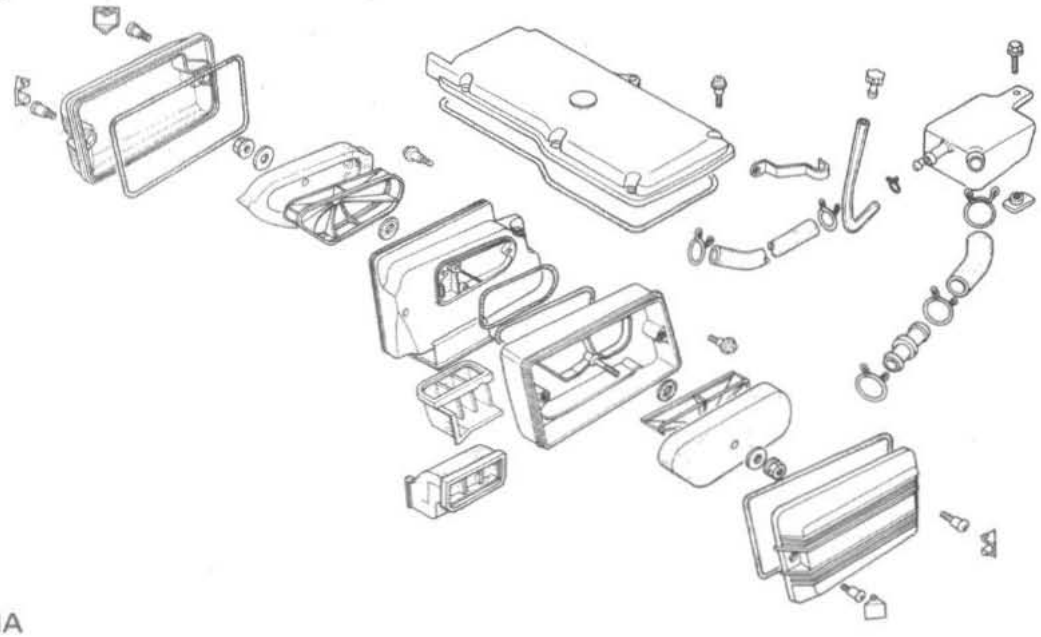

V45 MAGNA

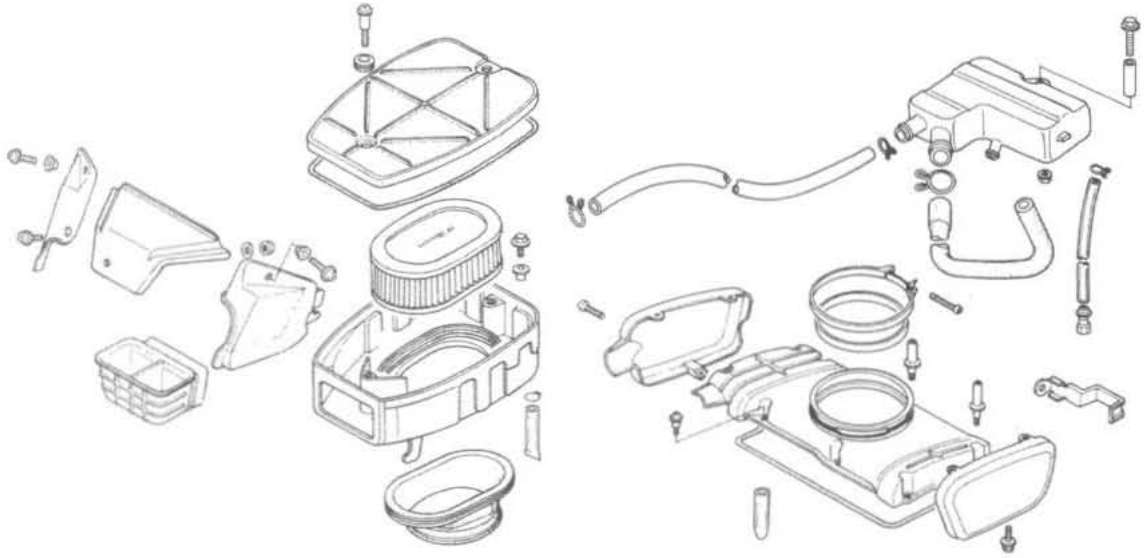

FUEL PUMP (V45 MAGNA)

Remove the seat, fuel tank (page 4-19) and side covers.
Disconnect the battery negative cable, then positive cable and remove the battery.
Remove the battery tray and starter relay switch.
Turn the fuel valve off.
Detach the fuel inlet and outlet lines from the fuel pump.
Disconnect the fuel pump wire connectors.
Remove the fuel pump mounting bolts and fuel pump.
Insatll the fuel pump in the reverse order of removal.

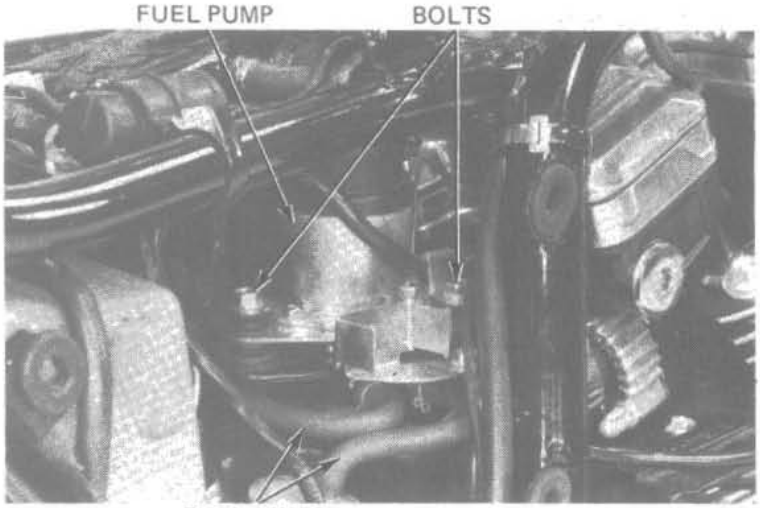

HIGH ALTITUDE ADJUSTMENT (USA only)

When the vehicle is to be operated continuously above 2,000 m (6,500 feet) the carburetor must be readjusted as follows to improve driveability and decrease exhaust emissions.

Warm up the engine to operating temperature. Stop and go driving for 10 minutes is sufficient.
Remove each pilot screw plug (page 4-10).
Turn each pilot screw clockwise 1 turn.
Adjust the idle speed to 1,000 ± 100 rpm with the throttle stop screw.
Drive new pilot screw plugs into the pilot screw bores (page 4-18).

NOTE:

> This adjustment must be made at high altitude to ensure proper high altitude operation.

Attach a Vehicle Emission Control Information Update label onto the frame as shown. Refer to Service Bulletin #SL132 for information on obtaining the label.

NOTE:

> Do not attach the label to any part that can be easily removed from the vehicle.

WARNING

> *Operation at an altitude lower than 1,500 m (5,000 feet) with the carburetors adjusted for high altitudes may cause the engine to idle roughly and stall.*

When the vehicle is to be operated continously below 1,500 m (5,000 feet), turn each pilot screw counterclockwise 1 turn to its original position after removing each pilot screw plug and adjust the idle speed to 1,000 ± 100 rpm. Drive new pilot screw plugs into the pilot screw bores (page 4-18). Be sure to do these adjustments at low altitude.

V45 SABRE

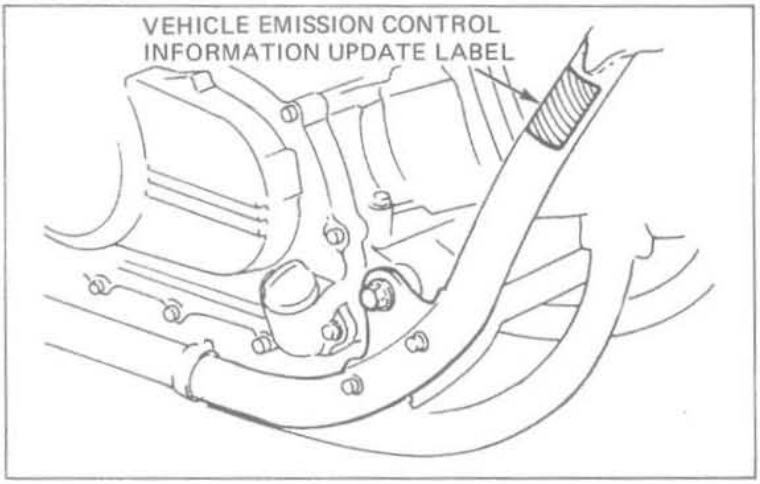

V45 MAGNA

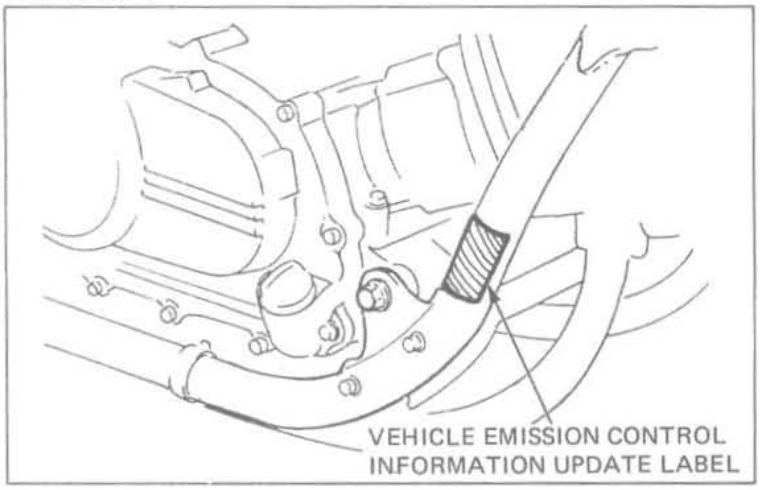

Date of Issue: October, 1982

V45 SABRE

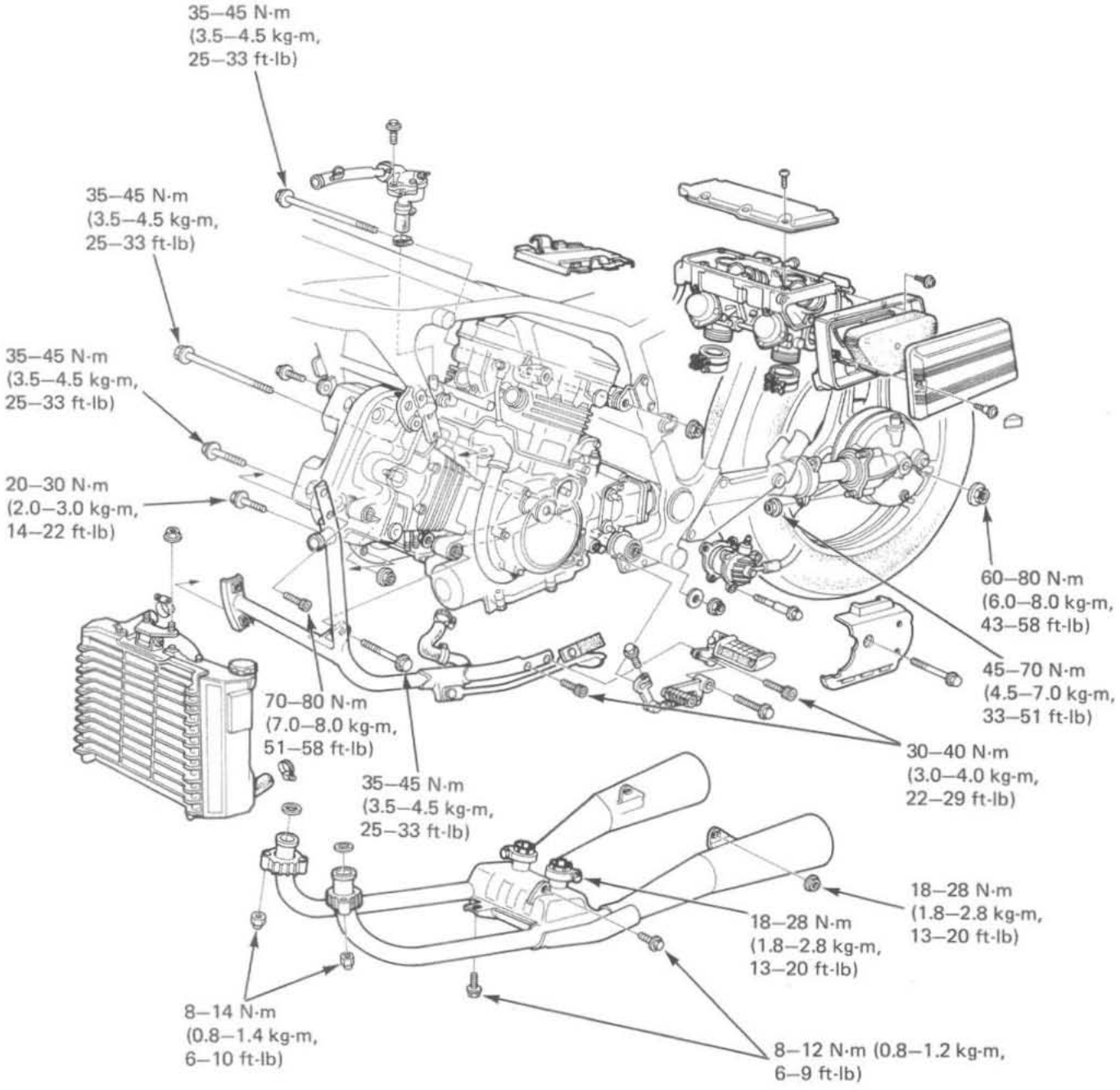

Date of Issue: May, 1982

5. ENGINE REMOVAL/ INSTALLATION

V45 MAGNA

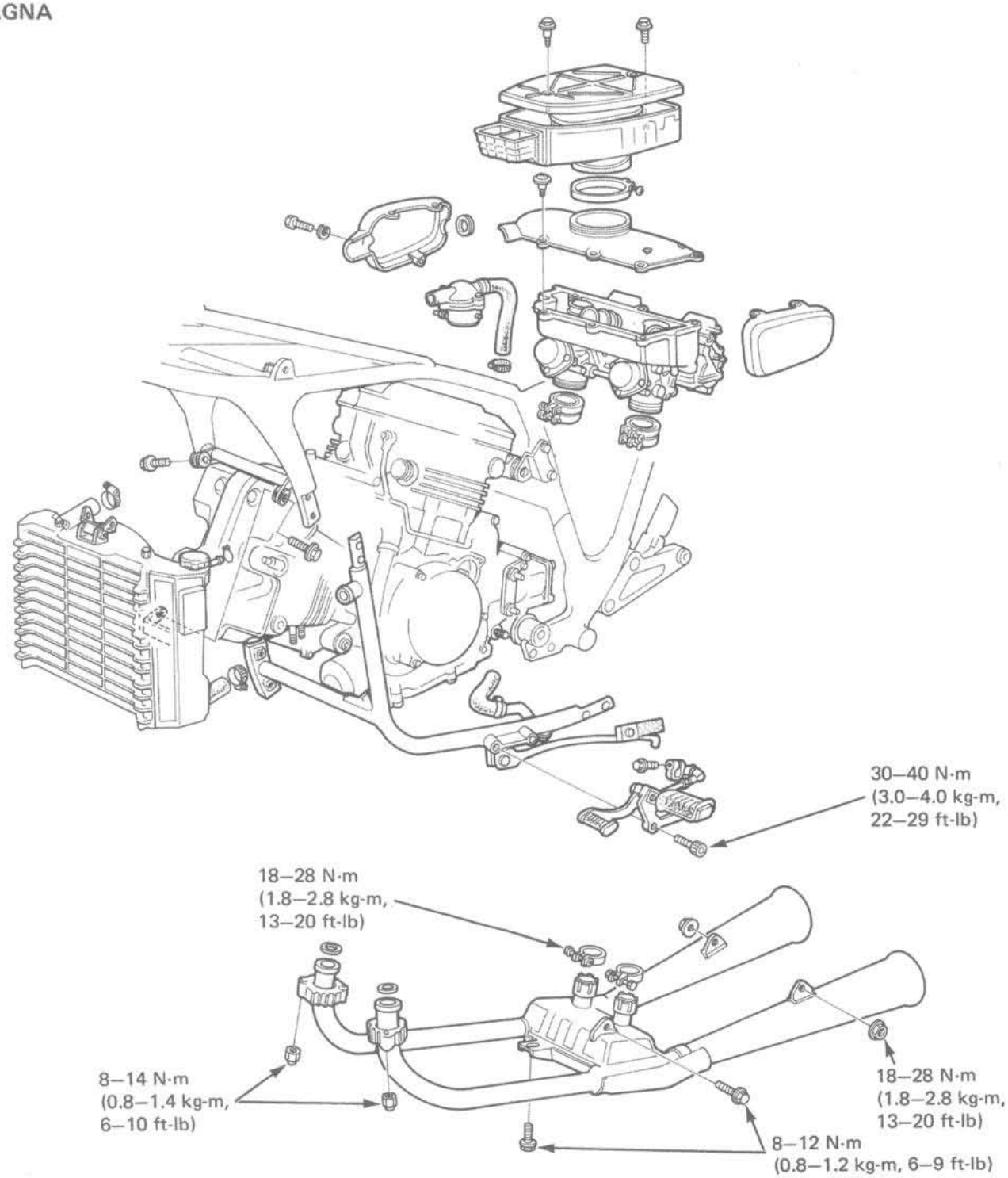

SERVICE INFORMATION

GENERAL

- A floor jack or other adjustable support is required to support and maneuver the engine.
- The following parts or components can be serviced with the engine installed in the frame:
  - Clutch
  - Gearshift linkage
  - Cylinder heads
  - Alternator
  - Starter motor
  - Carburetors

SPECIFICATIONS

Engine dry weight	84.7 kg (187 lb)
Oil capacity	3.0 liters (3.2 U.S. qt)

TORQUE VALUES

Engine hanger bolt	
8 mm bolt	20–30 N·m (2.0–3.0 kg-m, 14–22 ft-lb)
10 mm bolt	35–45 N·m (3.5–4.5 kg-m, 25–33 ft-lb)
Sub-frame bolts	
8 mm	20–30 N·m (2.0–3.0 kg-m, 14–22 ft-lb)
10 mm Upper	70–80 N·m (7.0–8.0 kg-m, 51–58 ft-lb)
Lower	30–40 N·m (3.0–4.0 kg-m, 22–29 ft-lb)
Rear axle nut	55–65 N·m (5.5–6.5 kg-m, 40–47 ft-lb)
Rear axle pinch bolt	20–30 N·m (2.0–3.0 kg-m, 14–22 ft-lb)
Brake panel stop bolt	35–45 N·m (3.5–4.5 kg-m, 25–33 ft-lb)
Final gear case nut	45–70 N·m (4.5–7.0 kg-m, 33–51 ft-lb)
Exhaust pipe joint nut	8–14 N·m (0.8–1.4 kg-m, 6–10 ft-lb)
Muffler mount bolt	18–28 N·m (1.8–2.8 kg-m, 13–20 ft-lb)
Exhaust chamber mount bolt	8–12 N·m (0.8–1.2 kg-m, 6–9 ft-lb)
Exhaust pipe clamp bolt	18–28 N·m (1.8–2.8 kg-m, 13–20 ft-lb)

Date of Issue: May, 1982

ENGINE REMOVAL

Place the motorcycle on its center stand.
Remove the seat and fuel tank.
Remove the left and right frame side covers.
Drain the engine oil (page 2-2) and the coolant (page 6-3).
Loosen the water pump hose band.

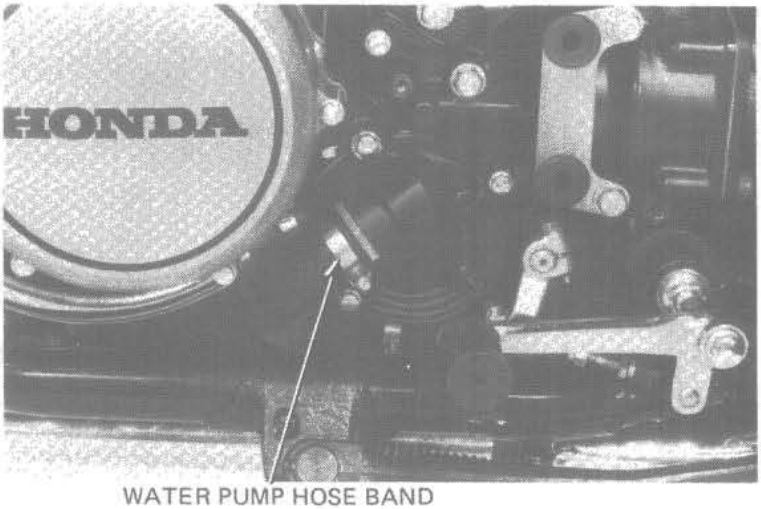

WATER PUMP HOSE BAND

Remove the clutch slave cylinder.

NOTE

> Do not operate the clutch lever after removing the clutch slave cylinder. To do so will cause difficulty in installing the slave cylinder.

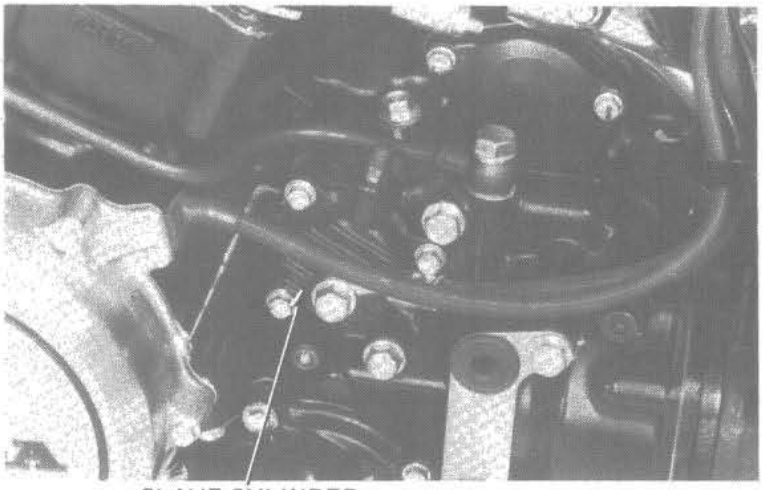
SLAVE CYLINDER

Remove the gearshift pedal.


GEARSHIFT PEDAL

Disconnect the alternator wire coupler.

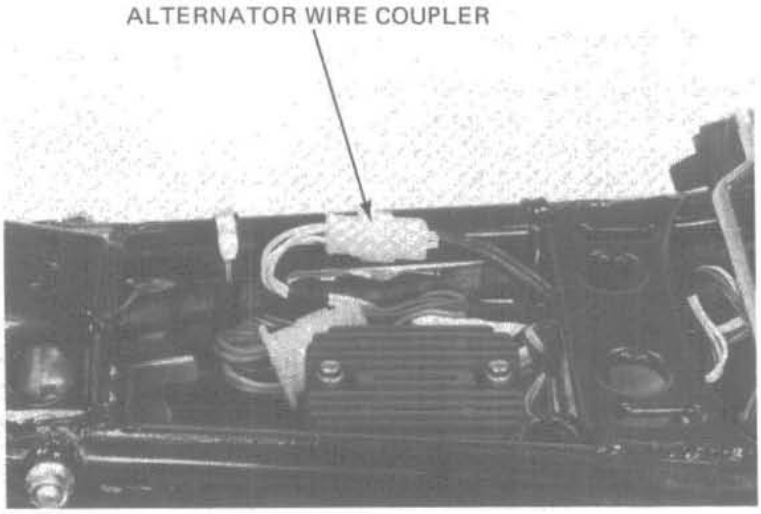

Disconnect the gearshift indicator switch coupler and wire connector.

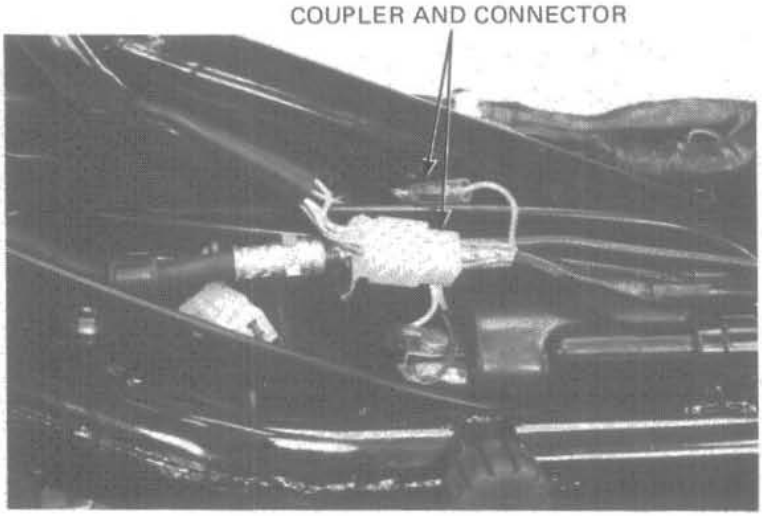

Disconnect the engine ground cable.

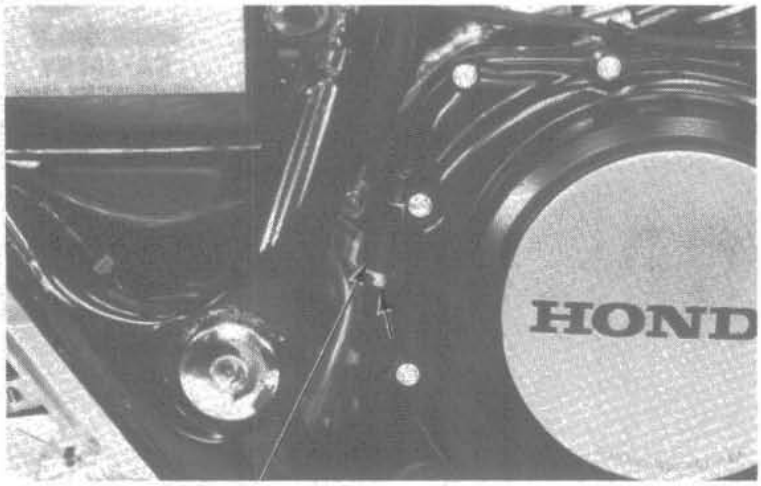

Disconnect the thermosensor wire connector.
Remove the ground wire by removing the bolt.

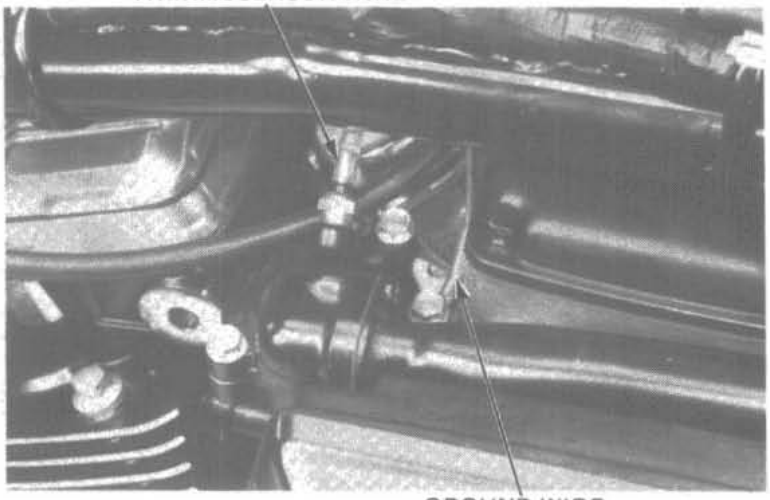

Disconnect the oil pressure switch wire and pulse generator wire coupler.

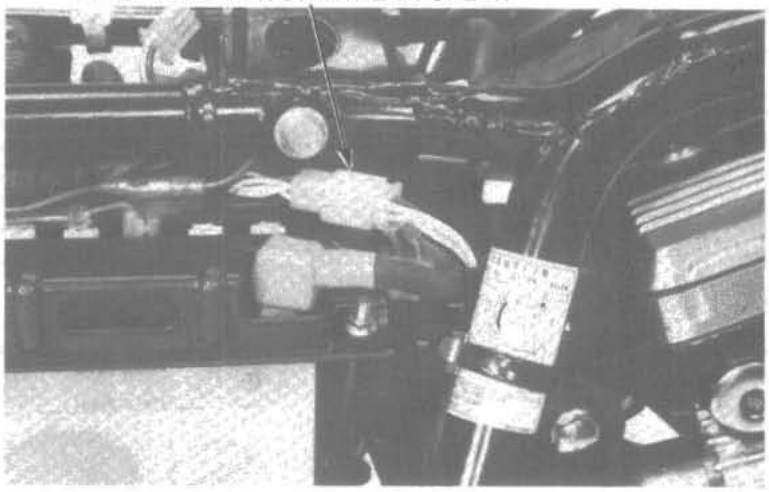

Disconnect the starter motor cable and spark plug caps.

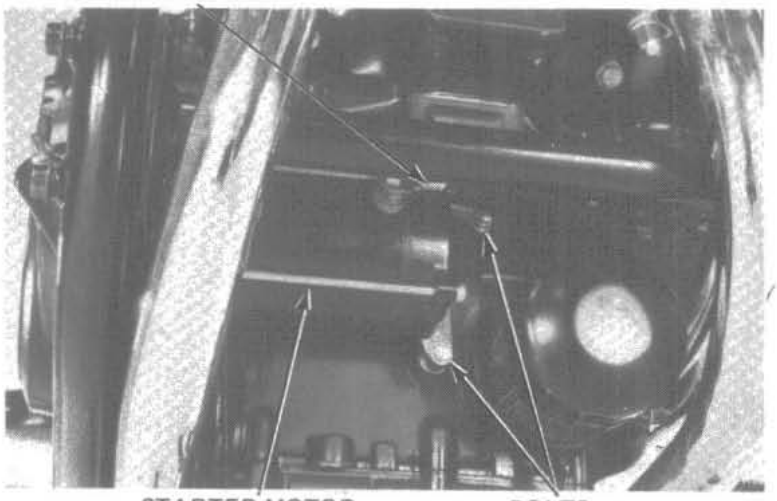

Remove the left side exhaust chamber mount bolt.

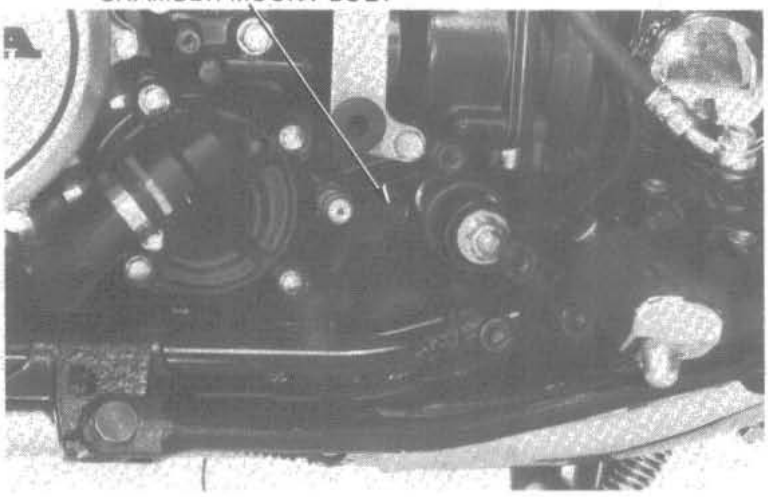

Remove the lower exhaust chamber mount bolts.
Remove the exhaust muffler mount bolts and joint nuts.
Loosen the exhaust pipe clamp bolts and remove the exhaust muffler.

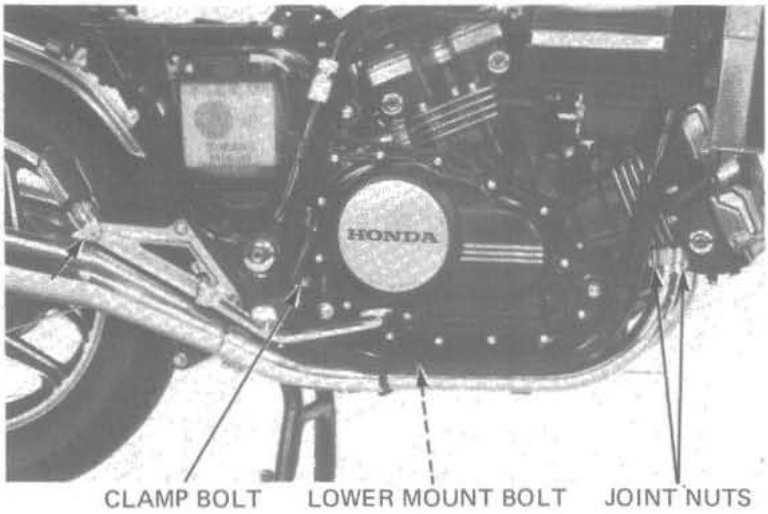

Remove the rear wheel (page 17-3) and the final gear (page 14-3).

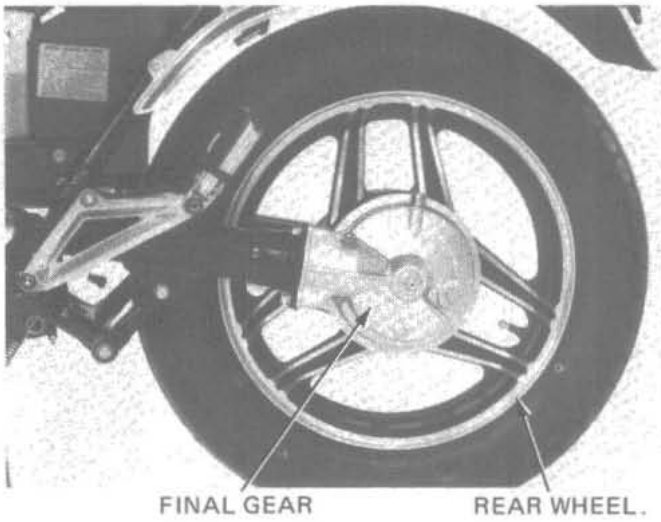

Remove the air cleaner case.

AIR CLEANER CASE (V45 SABRE shown)

Remove the carburetors (page 4-3 or 4-5).
Remove the radiator (page 6-8).
Disconnect the crankcase breather tube.
Place a floor jack or other adjustable support under the engine.

NOTE:

> The jack height must be continuously adjusted so that mounting bolts can be removed, and so stress is relieved from other bolts until they are removed.

Remove the engine mounting bolts.
Remove the left sub-frame bolts and sub-frame.
Remove the engine from the left side.

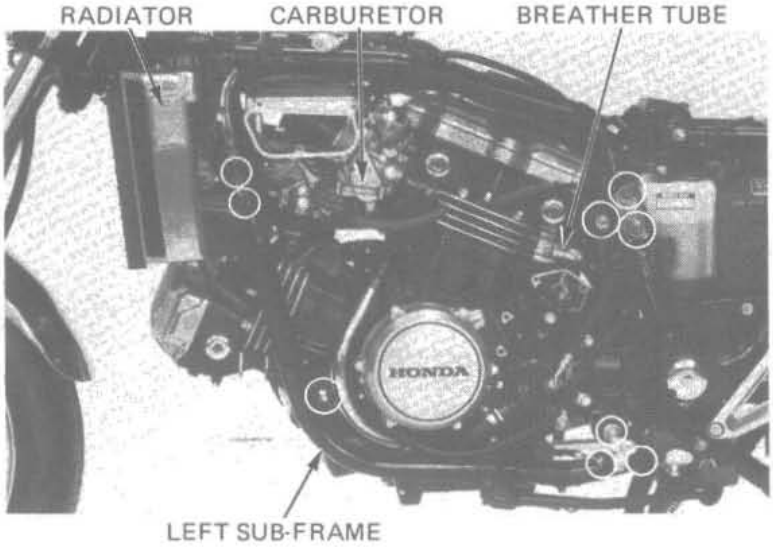

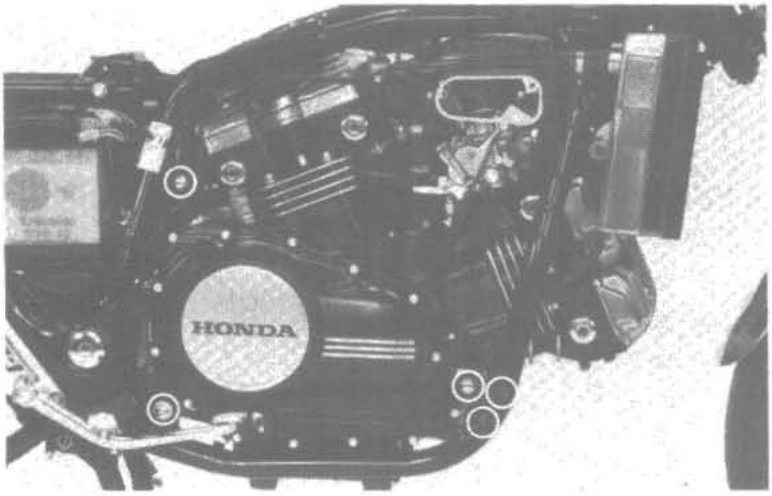

ENGINE INSTALLATION

Check the engine mount rubbers for damage and replace if necessary.
Install the engine mount rubbers.
Engine installation is essentially the reverse of removal.
Use a floor jack or other adjustable support to carefully manuever the engine into place.

CAUTION:

> Carefully align mounting points with the jack to prevent damage to mounting bolt threads and wire harness and cables.

Tighten all fasteners to the torque values given on page 5-2.

NOTE

> - Route the wires and cables properly (Page 1-9).
> - Fill the crankcase to the proper level with the recommended oil (Page 2-1).
> - Fill the cooling system (Page 6-3).
> - Perform the following inspection and adjustments:
> Throttle operation (Page 3-6).
> Clutch (Page 3-18).

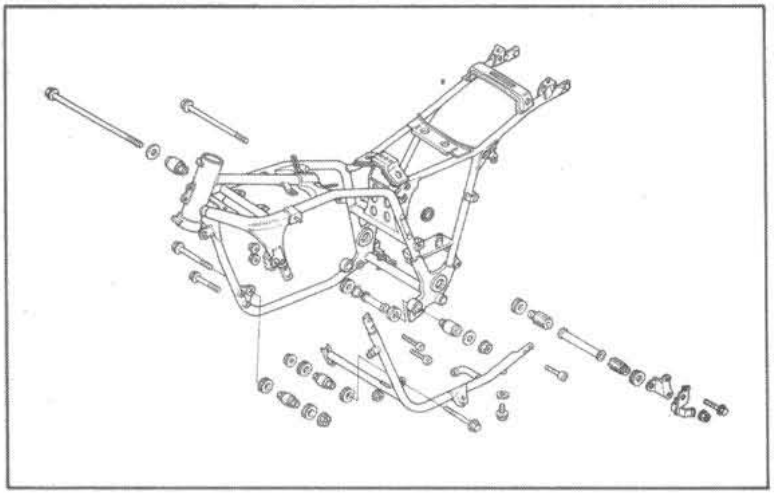

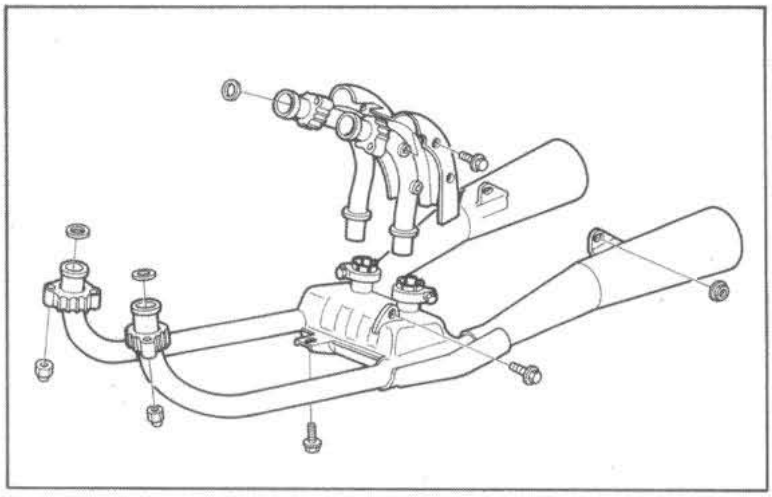

Install the exhaust system:
Install new exhaust pipe joint gaskets.
Assemble the left and right exhaust pipes.
Tighten the exhaust pipe band loosely and install the exhaust pipes.
Hand tighten all bolts and nuts, then torque them in the order given below:

1. Tighten the exhaust pipe joint nuts.

   TORQUE: 8–14 N·m
   (0.8–1.4 kg-m, 6–10 ft-lb)

2. Tighten the exhaust pipe mounting side and bottom bolts.

   TORQUE: 8–12 N·m
   (0.8–1.2 kg-m, 6–9 ft-lb)

3. Tighten the rear muffler hanger setting bolts.

   TORQUE: 18–28 N·m
   (1.8–2.8 kg-m, 13–20 ft-lb)

4. Tighten the exhaust pipe joint band bolts.

   TORQUE: 18–28 N·m
   (1.8–2.8 kg-m, 13–20 ft-lb)

Date of Issue: May, 1982

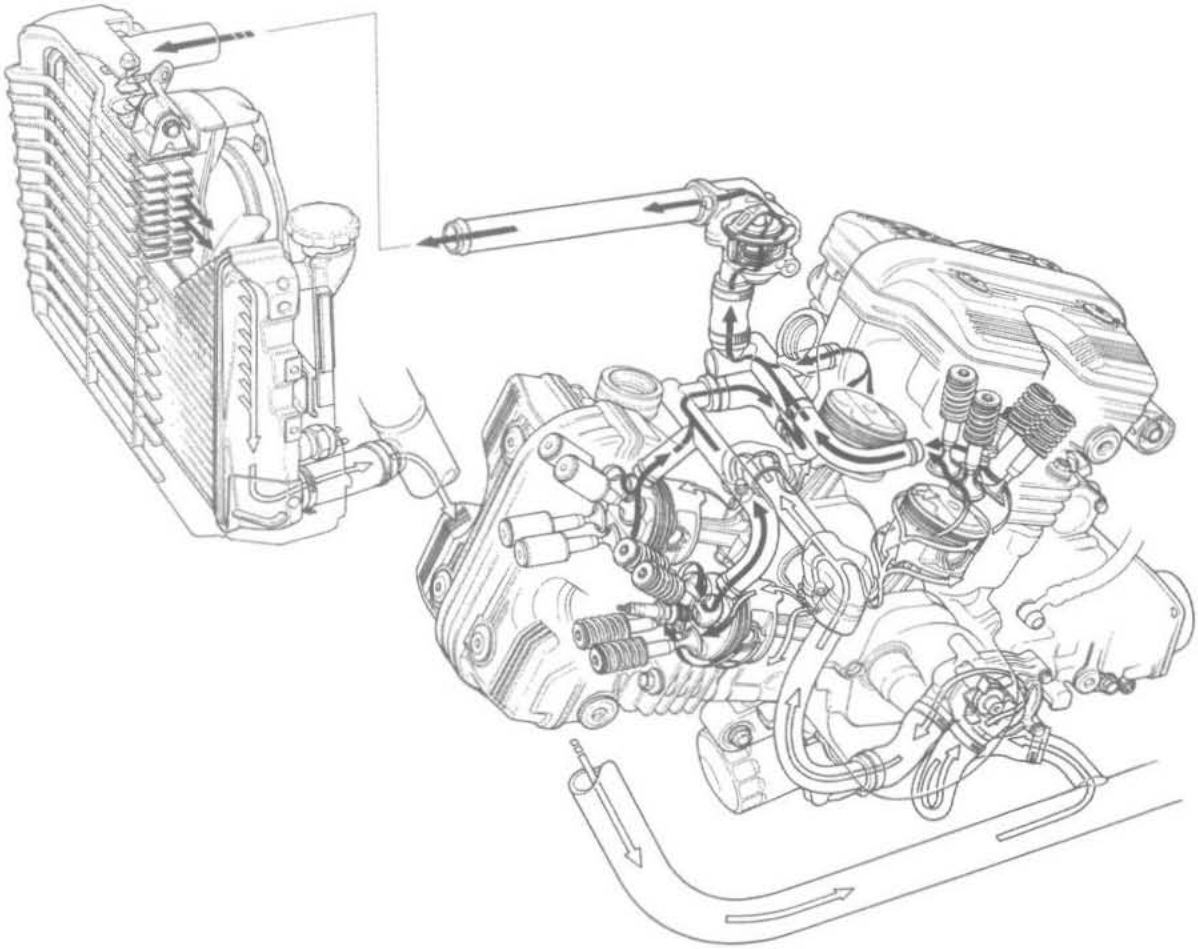

Date of Issue: January, 1982

6. COOLING SYSTEM

SERVICE INFORMATION

GENERAL

WARNING

Do not remove the radiator cap when the engine is hot. The coolant is under pressure and severe scalding could result. The engine must be cool before servicing the cooling system.

- Use only distilled water and ethylene glycol in the cooling system. A 50–50 mixture is recommended for maximum corrosion protection. Do not use alcohol-based antifreeze.
- Add coolant at the reserve tank. Do not remove the radiator cap except to refill or drain the system.
- All cooling system service can be made with the engine in the frame.
- Avoid spilling coolant on painted surfaces.
- After servicing the system, check for leaks with a cooling system tester.
- Refer to Section 21 for fan motor thermostatic switch and temperature sensor inspections.

SPECIFICATIONS

Radiator cap relief pressure	0.75–1.05 kg/cm² (10.7–14.9 psi)	
Freezing point (Hydrometer test):	55% Distilled water + 45% ethylene glycol: –32°C (–25°F) 50% Distilled water + 50% ethylene glycol: –37°C (–34°F) 45% Distilled water + 55% ethylene glycol: –44.5°C (–48°F)	
Coolant capacity:	V45 SABRE	V45 MAGNA
Radiator and engine	2.4 liters (2.5 US qt)	2.4 liters (2.5 US qt)
Reserve tank	0.4 liters (0.42 US qt)	0.45 liters (0.48 US qt)
Total system	2.8 liters (2.96 US qt)	2.85 liters (3.0 US qt)
Thermostat	Begins to open: 80° to 84°C (176° to 183°F) Valve lift: Minimum of 8 mm at 95°C (0.315 in. at 203°F)	
Boiling point (with 50–50 mixture):	Unpressurized: 107.7°C (226°F) Cap on, pressurized: 125.6°C (258°F)	

TOOLS

Special

Cooling system Tester	Commercially available

TROUBLESHOOTING

Engine temperature too high
1. Faulty temperature gauge or gauge sensor
2. Thermostat stuck closed
3. Faulty radiator cap
4. Insufficient coolant
5. Passages blocked in radiator, hoses, or water jacket
6. Fan blades bent
7. Faulty fan motor

Engine temperature too low
1. Faulty temperature gauge or gauge sensor
2. Thermostat stuck open

Coolant leaks
1. Faulty pump mechanical seal
2. Deteriorated O-rings

SYSTEM TESTING

COOLANT

Test the coolant mixture with an antifreeze tester. For minimum corrosion protection, a 50–50% solution of ethylene glycol and distilled water is recommended.

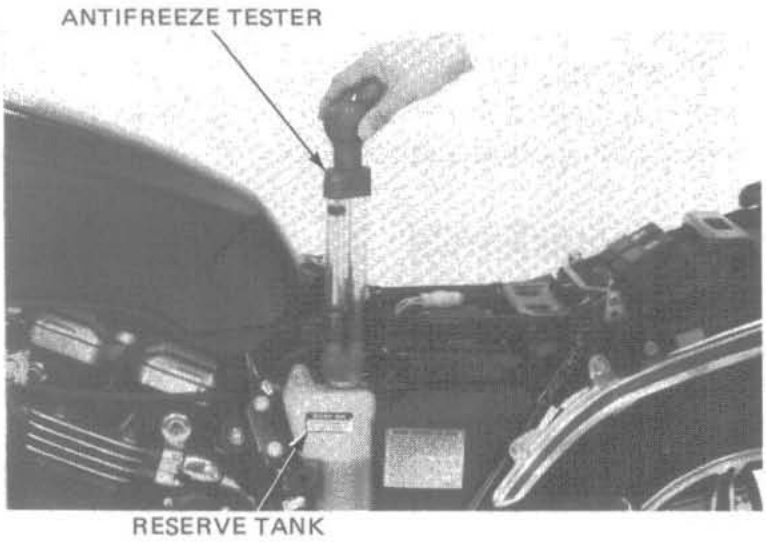

RADIATOR CAP INSPECTION

Pressure test the radiator cap. Replace the radiator cap if it does not hold pressure, or if relief pressure is too high or too low. It must hold specified pressure for at least six seconds.

NOTE

> Before installing the cap on the tester, apply water to sealing surfaces.

RADIATOR CAP RELIEF PRESSURE:
0.9 ± 0.15 kg/cm² (12.8 ± 2.1 Psi)

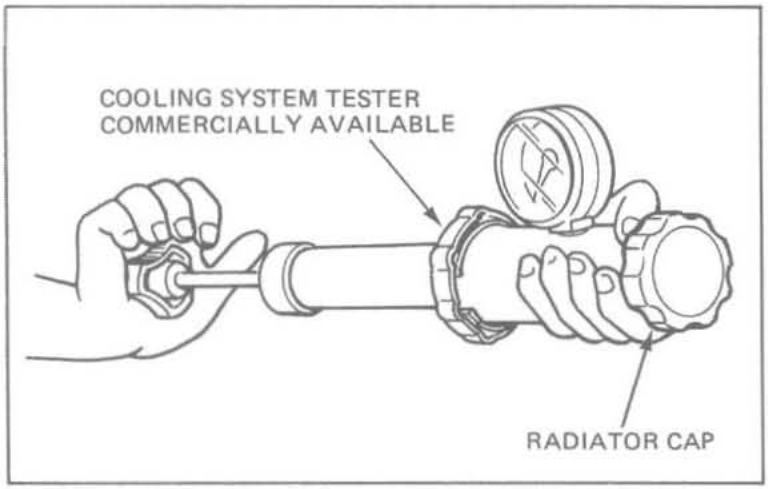

Pressurize the radiator, engine and hoses, and check for leaks.

CAUTION:

> *Excessive pressure can damage the radiator. Do not exceed 1.05 kg/cm² (14.9 Psi)*

Repair or replace components if the system will not hold specified pressure for at least six seconds.

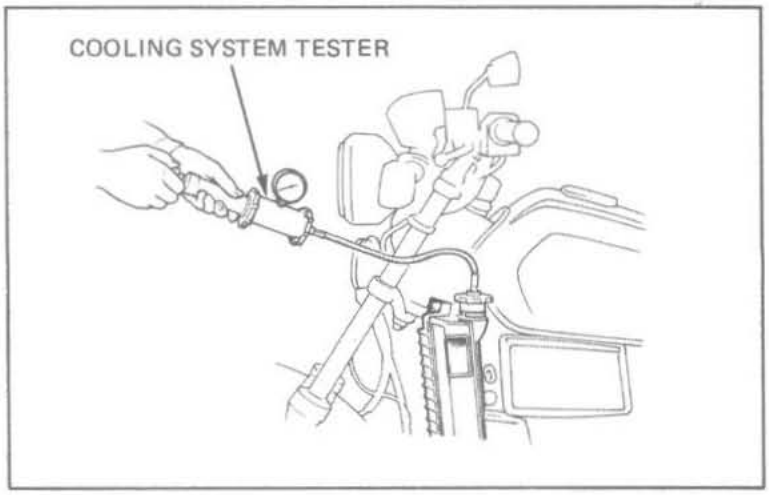

Date of Issue: May, 1982

COOLANT REPLACEMENT

CAUTION:

> *The engine must be cool before servicing the cooling system, or severe scalding may result.*

Remove the radiator cap.

Drain the coolant from the radiator; remove the drain plug located at the lower left sub-frame, and drain the coolant.

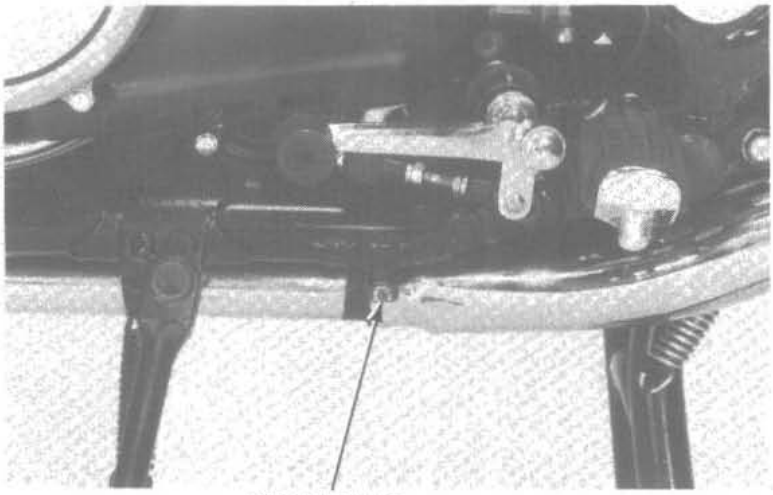

Drain the coolant from the engine; remove the drain bolts at the water pump cover and cylinder heads.
Replace the drain plug and bolts.
Fill the system with a 50–50 mixture of distilled water and ethylene glycol.
Bleed air from the radiator.

- Start the engine and run until there are no air bubbles in the coolant, and the level stabilizes.
- Stop the engine and add coolant up to the proper level if necessary.
- Reinstall the radiator cap.
- Check the level of coolant in the reserve tank and fill to the correct level if the level is low.

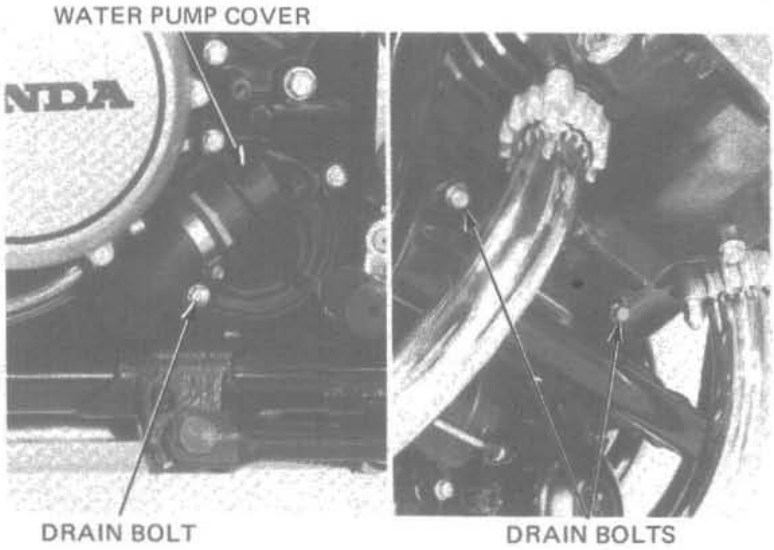

THERMOSTAT

REMOVAL (V45 SABRE)

Turn the fuel valve OFF.
Remove the seat and fuel tank.
Remove the coolant drain plug, and drain the coolant (page 6-3).
Remove the right air cleaner element and right air cleaner case.

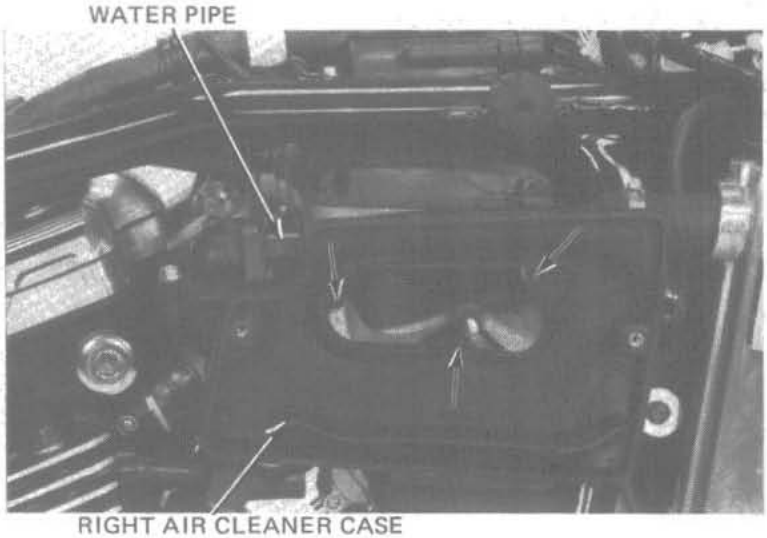

Loosen the radiator upper hose band and remove the water pipe attaching screw.

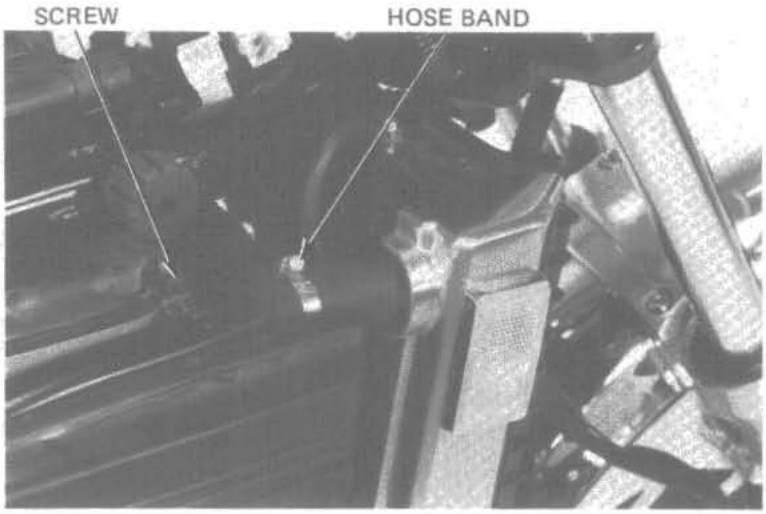

Disconnect the wire connector from the temperature sensor.
Remove the thermostat housing cover bolts.
Disconnect the water pipe from the thermostat housing cover by removing the two screws.
Remove the thermostat housing cover.

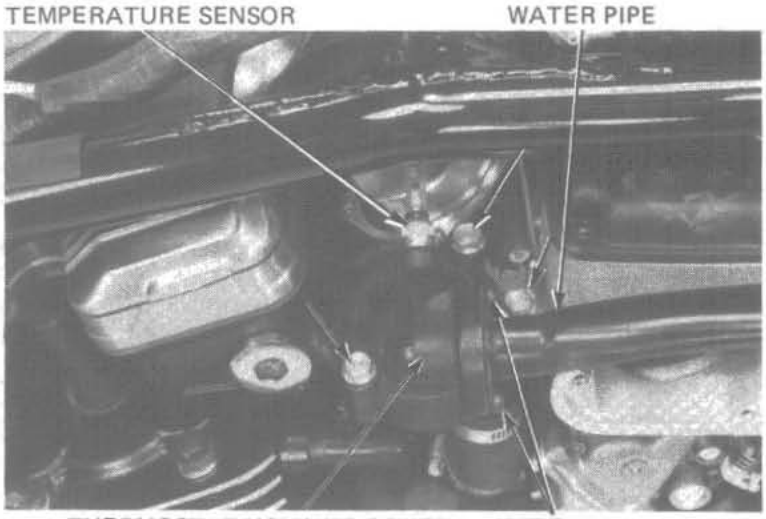

Date of Issue: January, 1982

Reove the thermostat from the housing.

REMOVAL (V45 MAGNA)

Remove the seat and the fuel tank.
Remove the coolant drain plug, and drain the coolant (page 6-3).
Remove the right radiator cover and right air chamber cover.

Remove the bolt attaching the thermostat housing to the air chamber.
Loosen the hose bands.
Remove the thermostat housing cover and remove the thermostat.

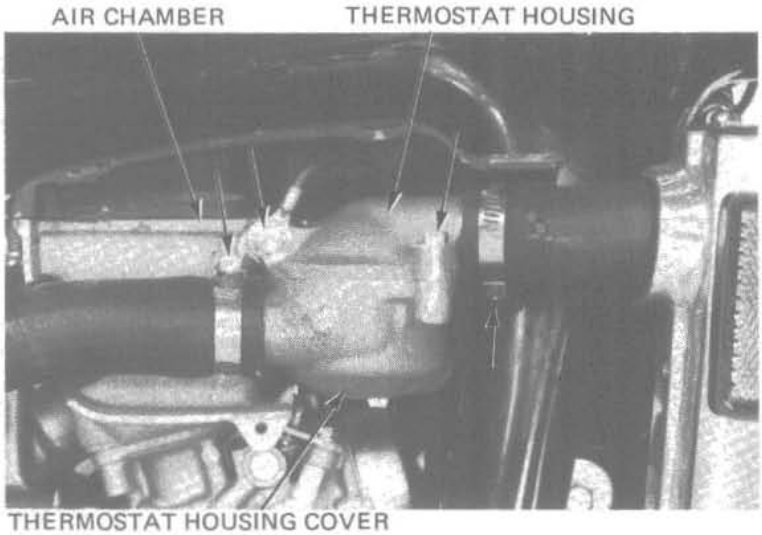

INSPECTION

Inspect the thermostat visually for damage.
Suspend the thermostat in heated water to check its operation.
Do not let the thermostat or thermometer touch the pan or false readings will result.
Replace thermostat if valve stayes open at room temperature, or if it responds at temperatures other than those specified.

Technical Data

Start to open	80° to 84°C (176°–183°F)
Valve lift	8 mm minimum (0.31 in) when heated to 95°C (203°F) for five minutes.

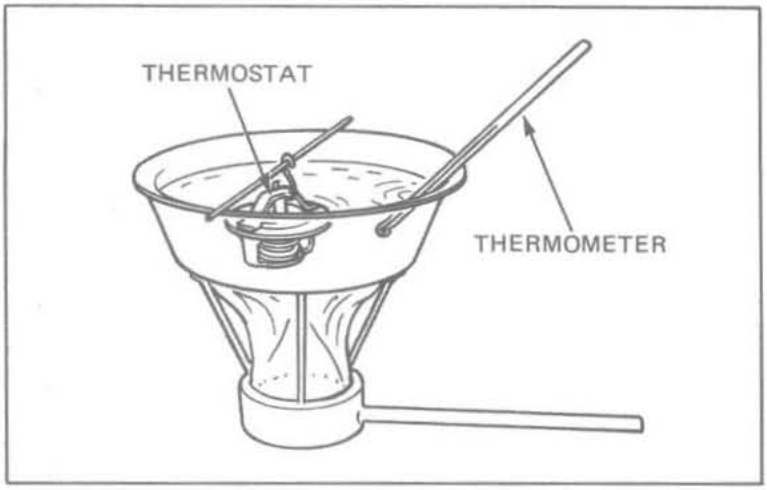

INSTALLATION (V45 SABRE)

Install a new O-ring on the thermostat housing cover and insert the thermostat into the housing.

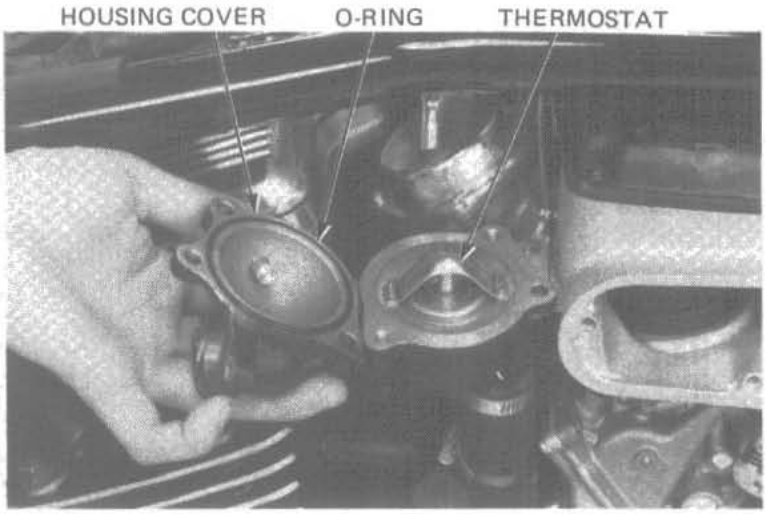

Slide a new O-ring onto the water pipe and connect the water pipe to the thermostat housing cover with the two screws.

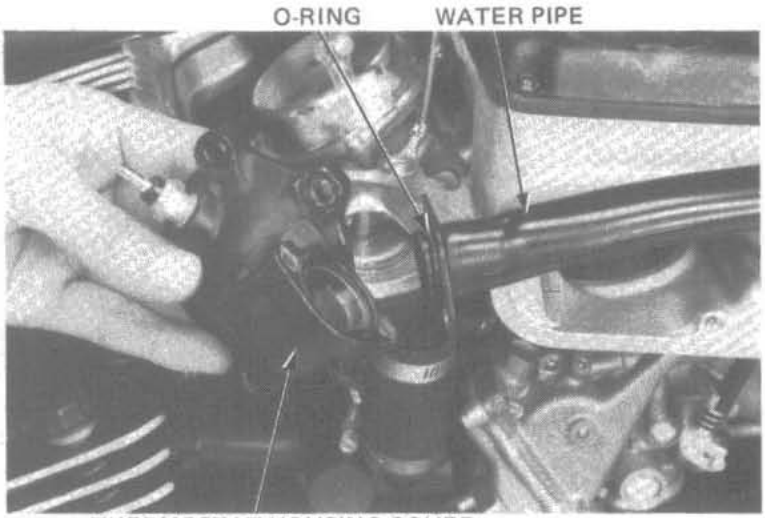

Connect the water pipe to the upper radiator hose and tighten the hose band.
Secure the water pipe to the air chamber with the screw.

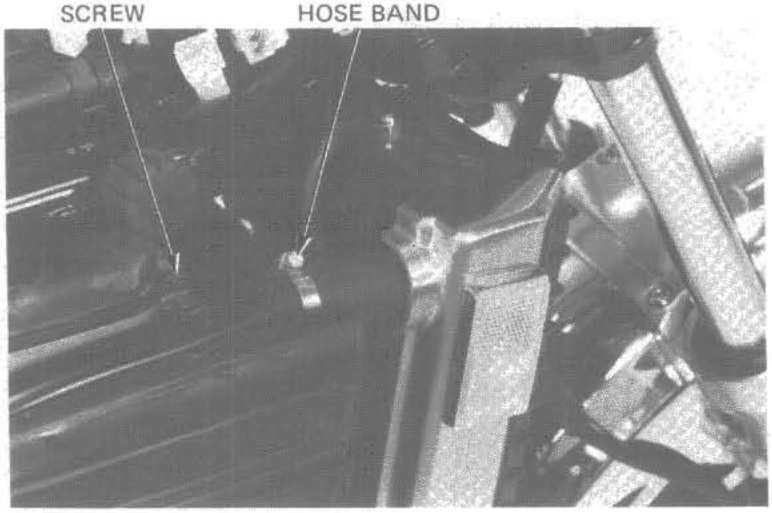

Align the groove in the thermostat housing with the locating pin on the air chamber.
Tighten the thermostat housing cover.

NOTE:

Tighten the ground wire terminal together with the cover bolt as shown.

Connect the wire lead to the temperature sensor.
Install the right air cleaner case, element and cover.
Fill the cooling system (page 6-3).

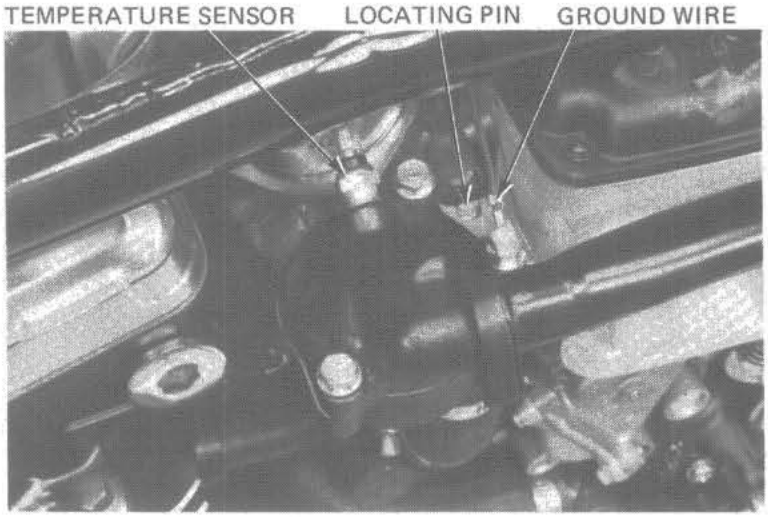

INSTALLATION (V45 MAGNA)

Insert the thermostat into the housing.
Install a new O-ring on the thermostat housing cover.
Install the thermostat housing cover and tighten the bolts.
Connect the housing to the hoses and tighten the hose bands.
Secure the thermostat housing to the air chamber with the bolt attaching the ground wire terminal at the same time.
Install the right air chamber cover and radiator cover.
Fill the cooling system (page 6-3).

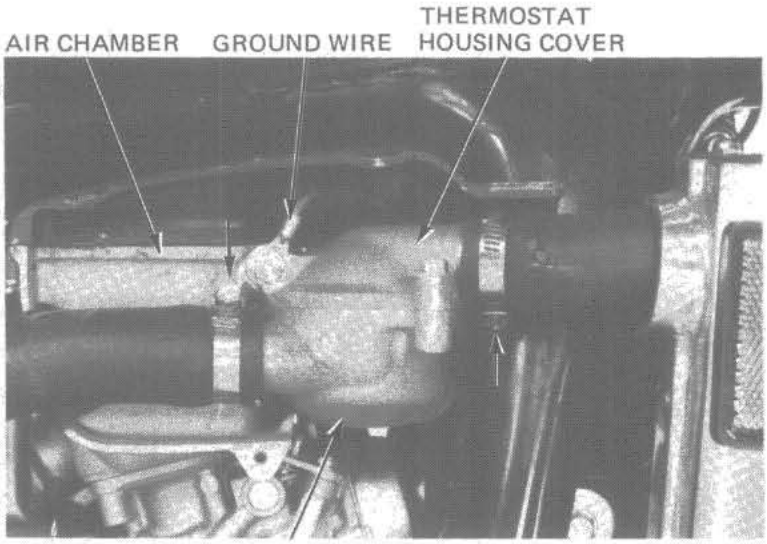

RADIATOR/COOLING FAN

REMOVAL

Remove the seat and fuel tank.
Remove the drain plug and drain the coolant (page 6-3).
Disconnect the overflow tube at the radiator filler neck.
Disconnect the fan motor wire coupler from the wire harness.

OVERFLOW TUBE

FAN MOTOR COUPLER

On the V45 SABRE; remove the radiator lower hose cover.
On the V45 MAGNA; remove the right air chamber cover and right and left radiator covers.
Disconnect the wires from the thermostatic switch.

THERMOSTATIC SWITCH COUPLER

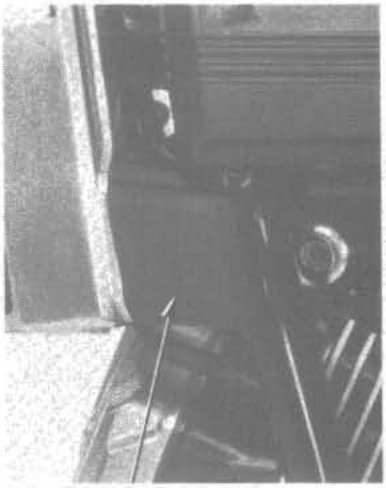

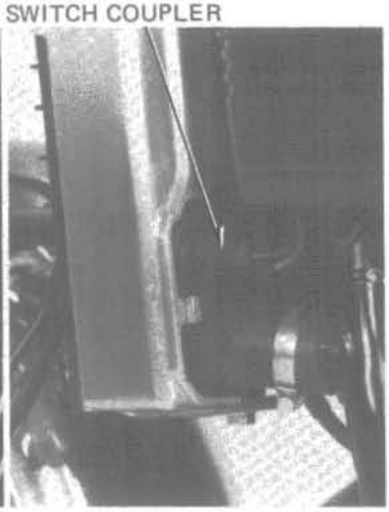

LOWER HOSE COVER

Loosen the upper and lower hose bands.

UPPER HOSE BAND

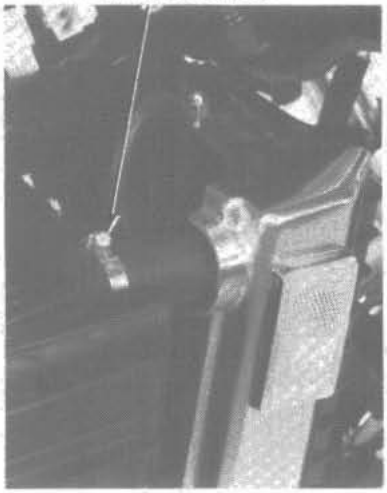

LOWER HOSE BAND

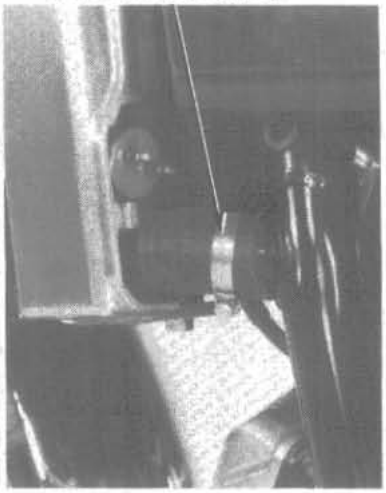

Date of Issue: January, 1982

Remove the radiator mounting bolts and nuts. Remove the radiator while pulling the upper and lower hoses off.

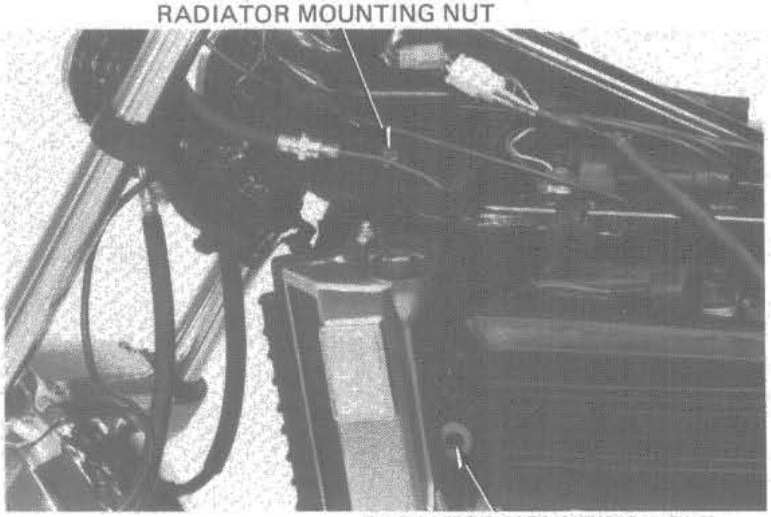

DISASSEMBLY

Remove the right and left radiator cover bolts and nuts, covers and radiator grille.

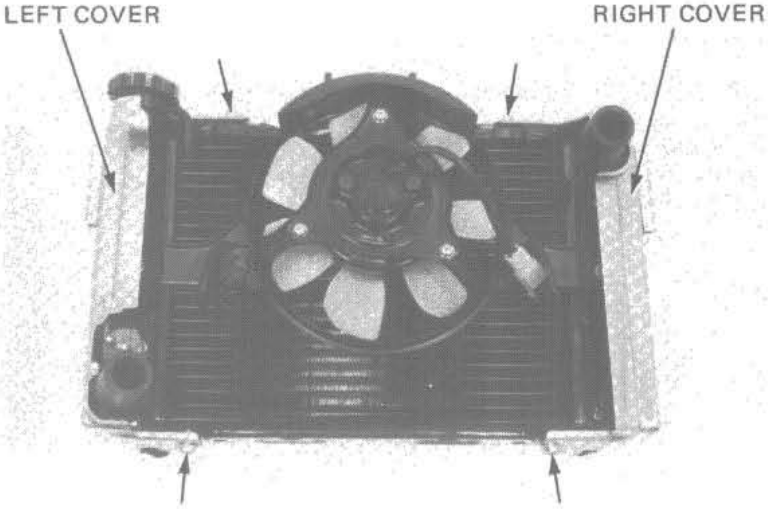

Remove the fan shroud with the fan by removing the four bolts.
Remove the fan attaching screws and remove the fan from the fan shroud.

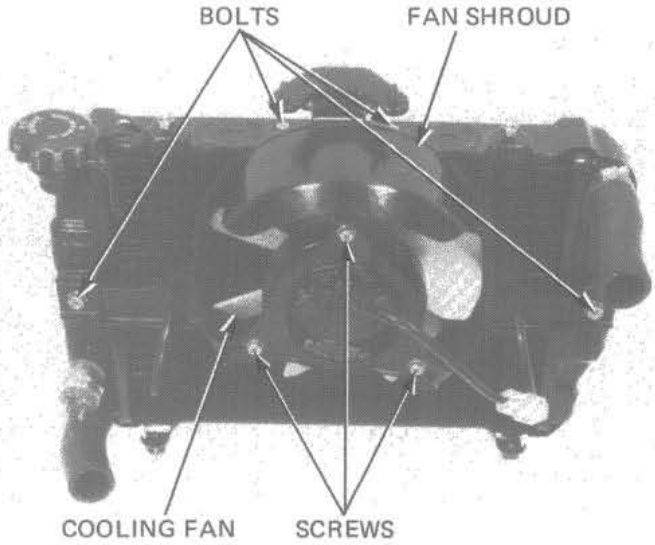

Remove the fan attaching nut and pull the fan off the fan motor.

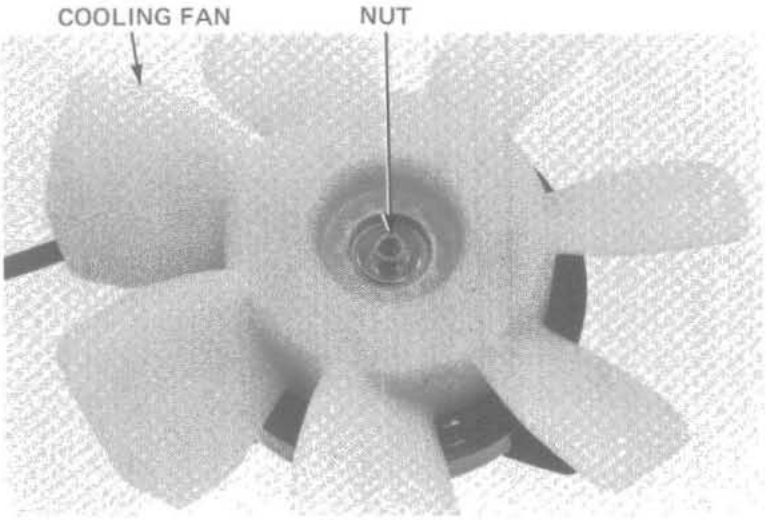

RADIATOR INSPECTION

Inspect the radiator soldered joints and seams for leaks.
Blow dirt out from between core fins with compressed air. If insects, etc., are clogging the radiator, wash them off with low pressure water.

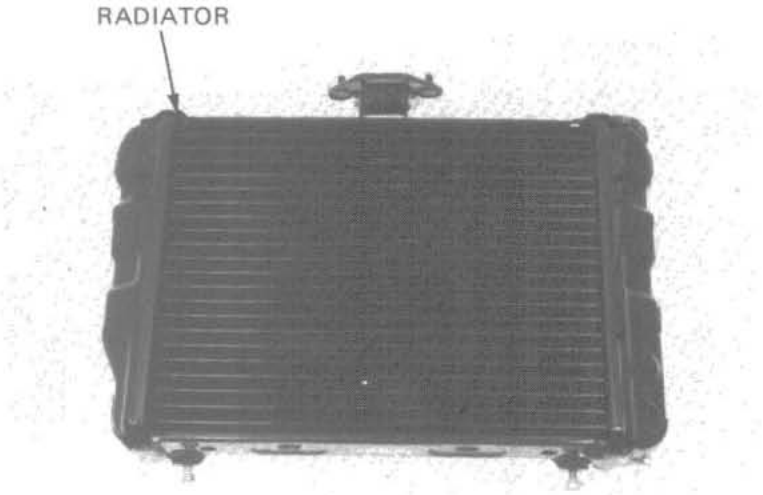

ASSEMBLY

Install the fan over the motor shaft.
Apply a locking agent to the fan motor shaft threads, install and torque the plain washer, lock washer and nut.

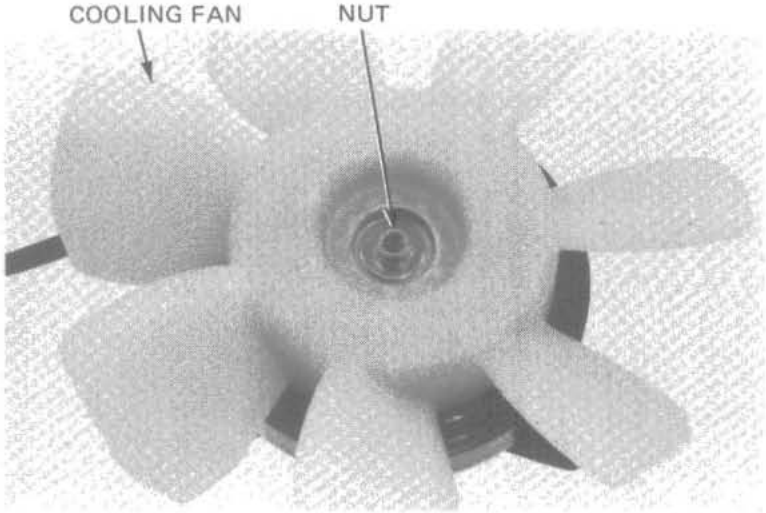

Attach the fan motor to the fan shroud with its TOP mark facing up.

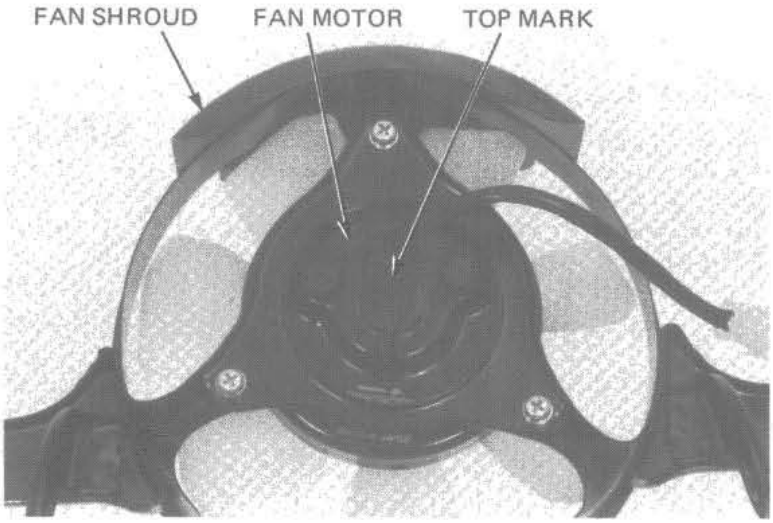

Attach the fan shroud to the radiator.
Install the radiator grille, and the right and left radiator covers.

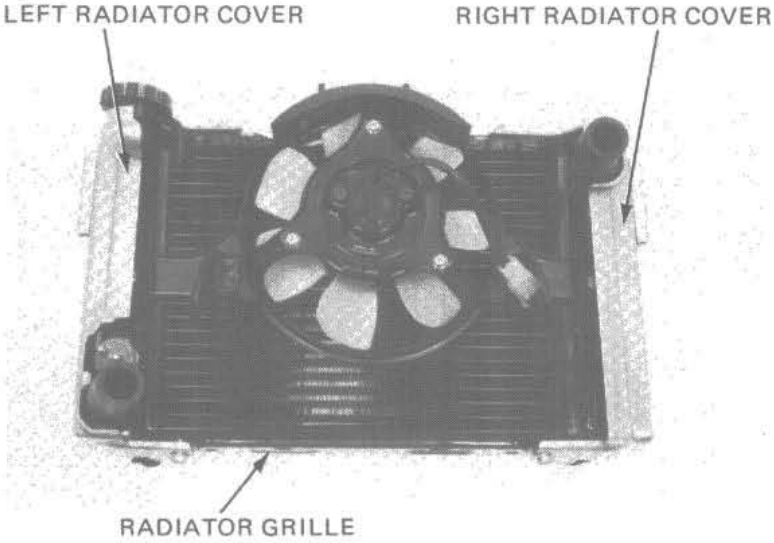

INSTALLATION

Install the inlet and outlet hoses on the radiator.
Install the radiator on the frame and tighten the mounting bolts and nuts.
Connect the inlet and outlet hoses and tighten the hose bands.
Connect the wire coupler to the thermostatic switch.
Connect the fan motor wire coupler to the wire harness.
Install the lower hose cover.

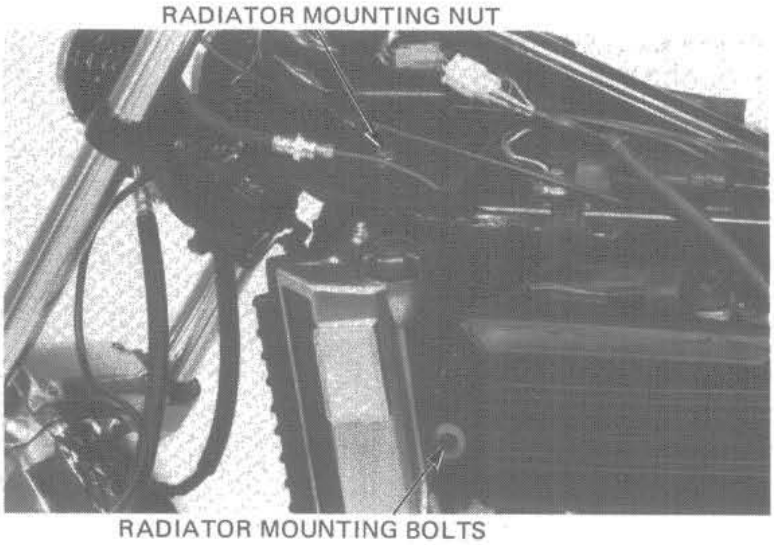

WATER PUMP

MECHANICAL SEAL INSPECTION

Remove the crankcase rear cover.
Inspect the telltale hole for signs of mechanical seal coolant leakage.
Replace the water pump as an assembly if the mechanical seal is leaking.

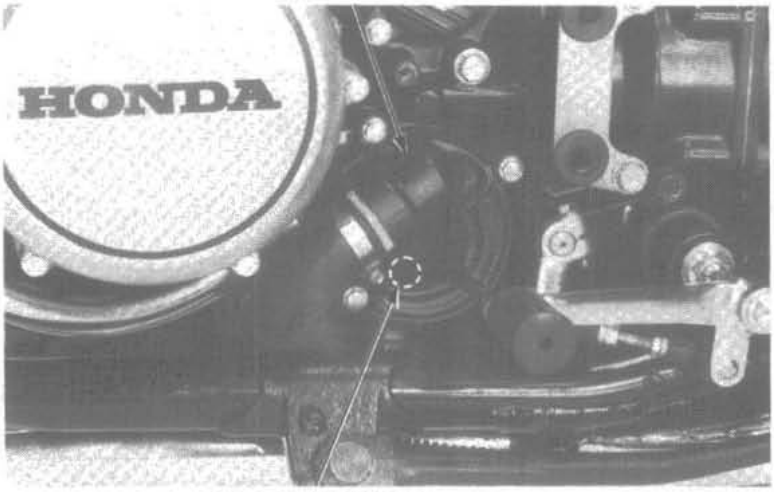

REMOVAL

Remove the drain plug from the lower left frame and drain the coolant.
Remove the drain bolt at the water pump and drain the coolant from the cylinders.
Disconnect the water hose from the water pump cover.
Remove the water pump cover bolt and cover.

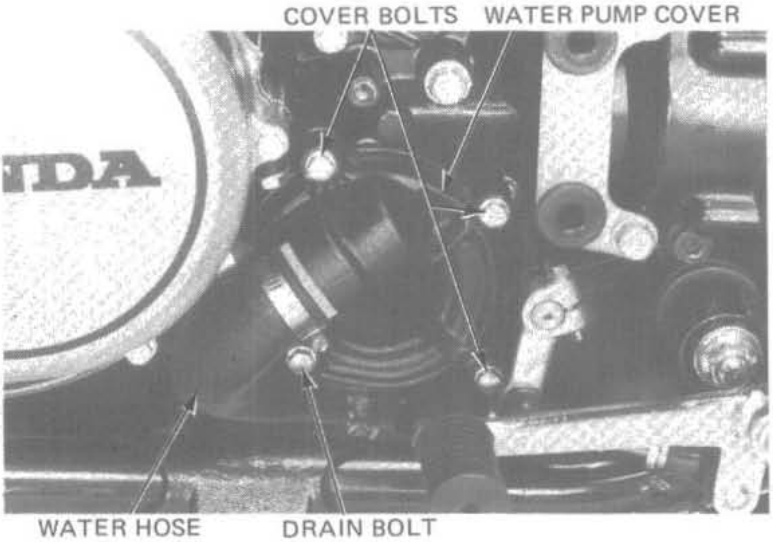

Remove the water pump clamp bolt.
Loosen the water hose bands.
Pull off the water pump from the crankcase.
Remove the water pipe from the water pump.

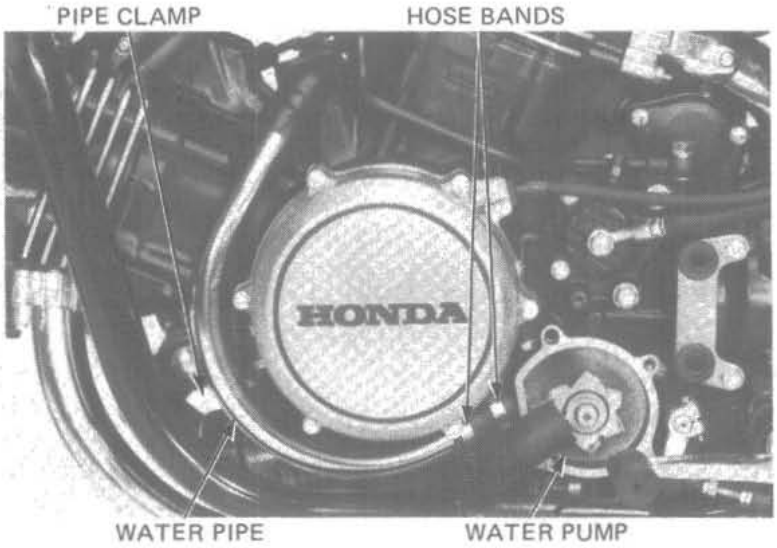

Date of Issue: May, 1982

INSPECTION

Check the water pump for mechanical seal leakage and bearing deterioration.
Replace the water pump as an assembly if necessary.

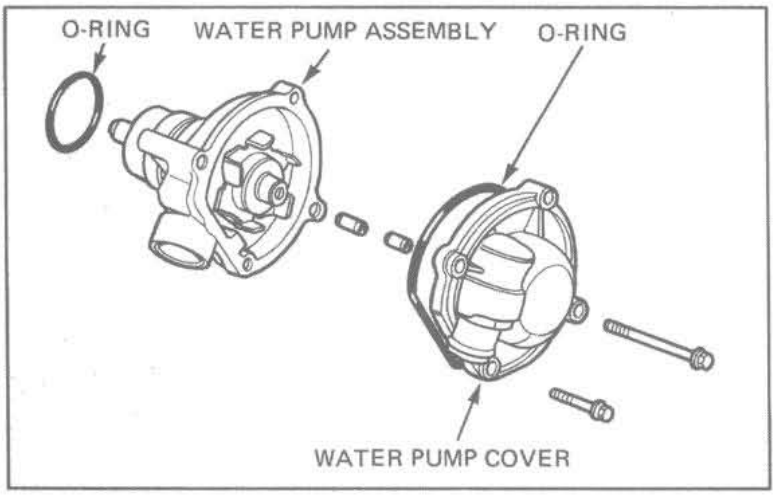

INSTALLATION

Apply a coat of clean engine oil to a new O-ring and install it in the water pump groove.
Align the water pump shaft groove with the oil pump shaft and insert the water pump in the crankcase.

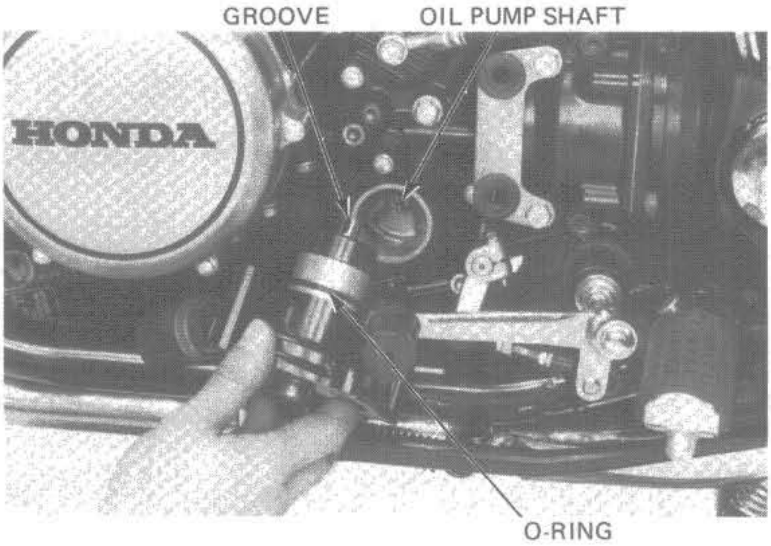

Insert a new O-ring over the end of the water pipe.
Connect the water pipe to the pump hose and water pipe cap.

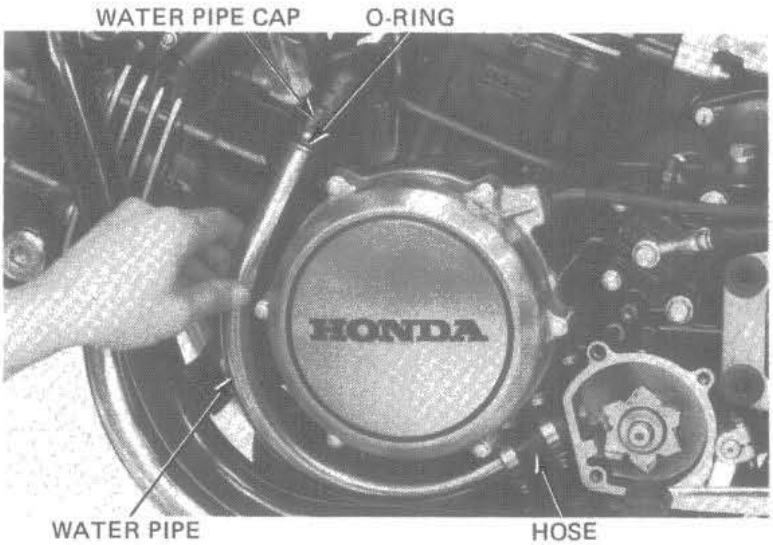

Install the dowel pins and install a new O-ring in the groove of the water pump cover.
Install the water pump cover and torque the bolts.

TORQUE: 7.5–10.5 N·m (0.75–1.05 kg·m, 6–8 ft·lb)

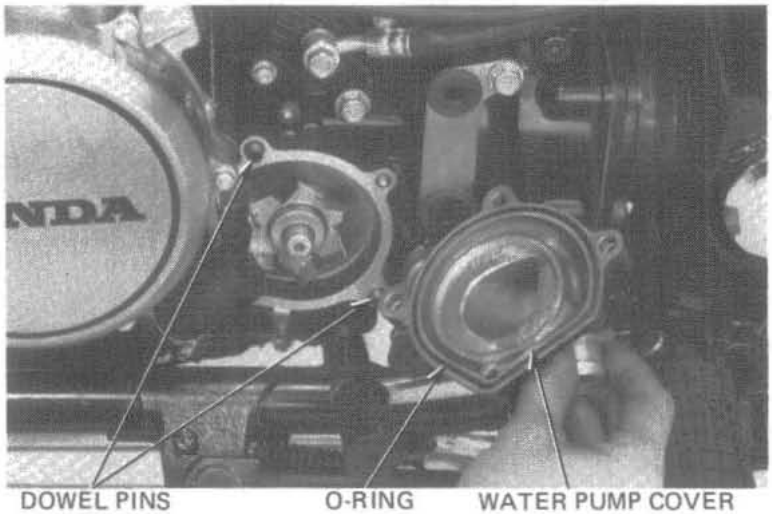

Connect the water hose and tighten all the hose bands.
Install the crankcase rear cover.
Tighten the drain plug at the left sub-frame.
Fill the system with a 50–50 mixture of distilled water and ethylene glycol (page 6-3).

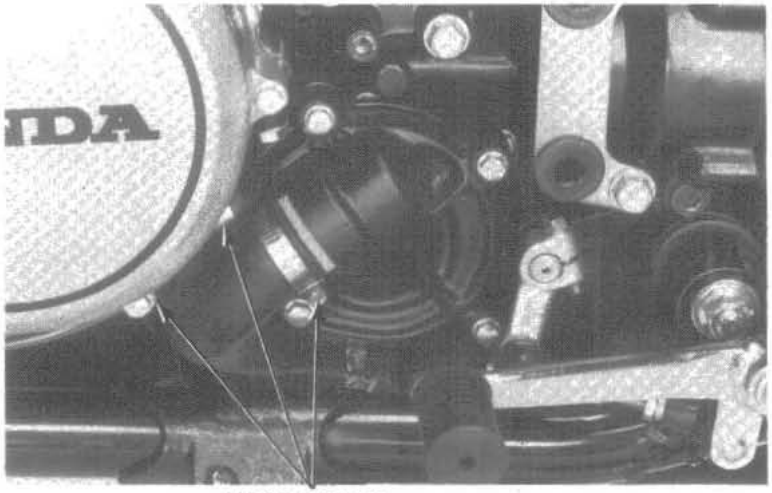

Date of Issue: May, 1982

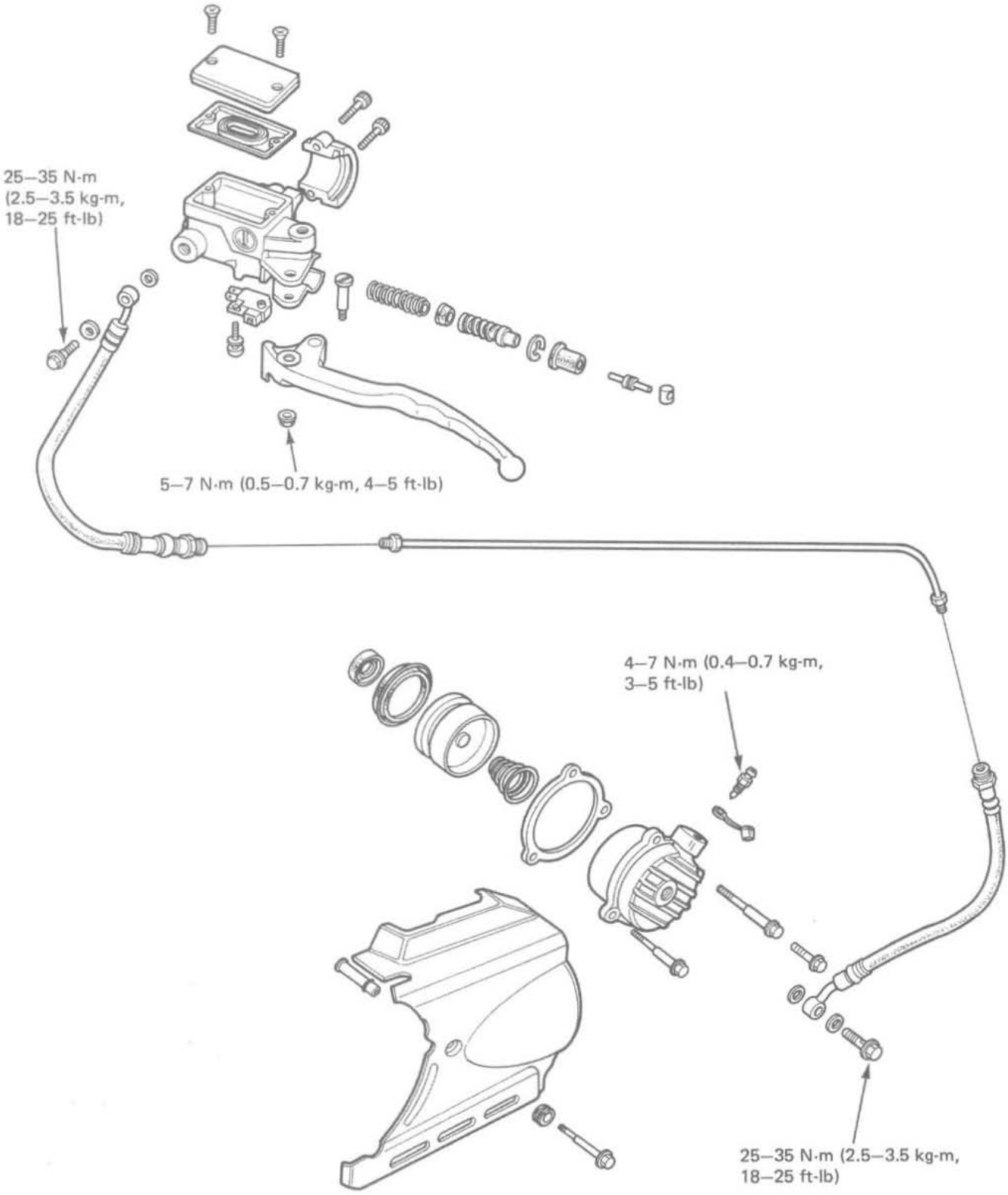

7. CLUTCH

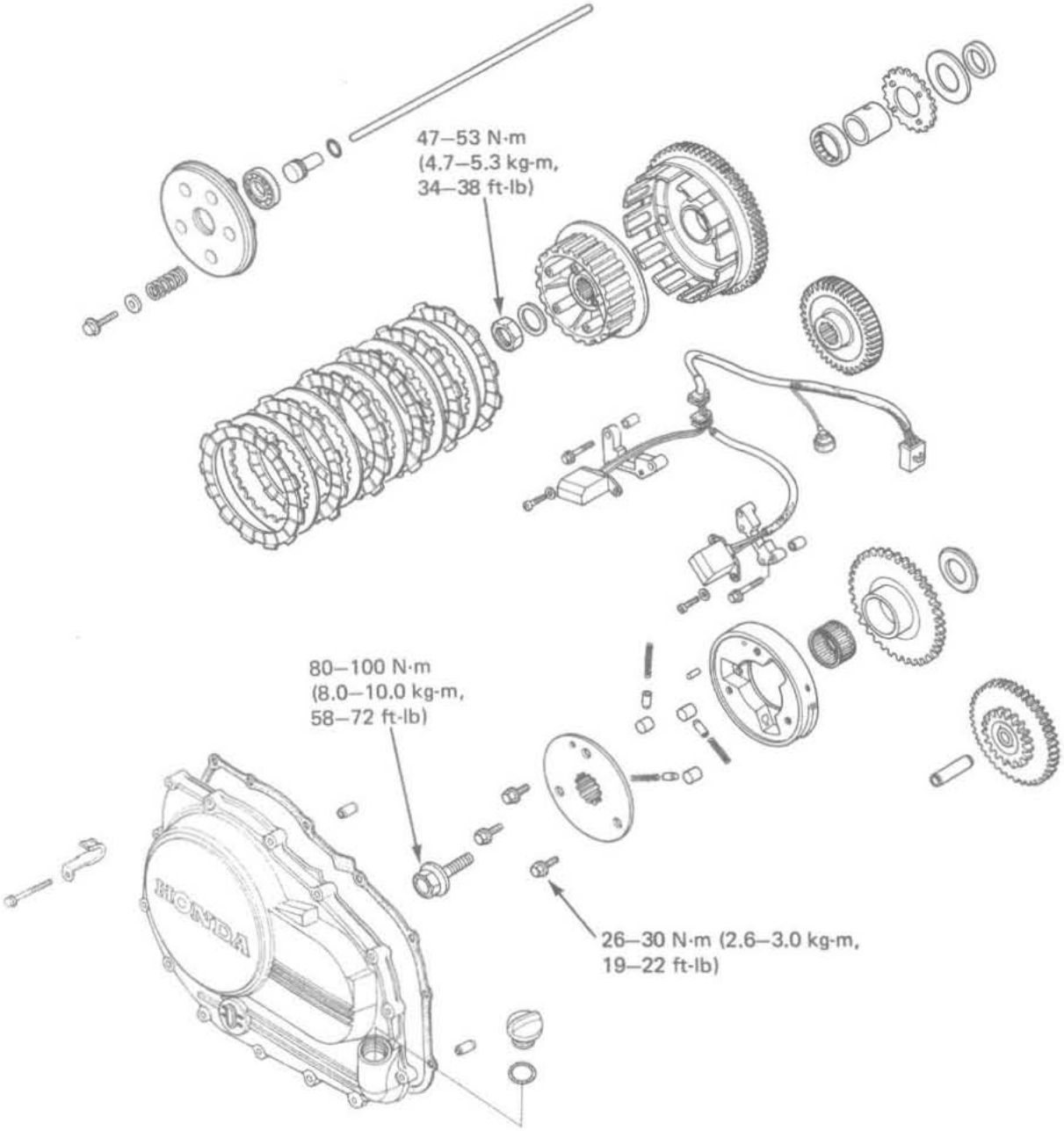

SERVICE INFORMATION

GENERAL

- This section covers removal and installation of the clutch hydraulic system, clutch and starter clutch.
- DOT-3 brake fluid is used for the hydraulic clutch and is referred to as clutch fluid in the section. Do not use other types of fluid as they are not compatible.
- Clutch maintenance can be done with the engine in the frame.

SPECIFICATIONS

		STANDARD	SERVICE LIMIT
Clutch master cylinder	Cylinder I.D.	14.000–14.043 mm (0.5512–0.5524 in)	14.06 mm (0.553 in)
	Piston O.D.	13.957–13.984 mm (0.5495–0.5506 in)	13.94 mm (0.549 in)
Clutch slave cylinder	Cylinder I.D.	38.100–38.162 mm (1.5000–1.5024 in)	38.18 mm (1.503 in)
	Piston O.D.	38.036–38.075 mm (1.4975–1.4990 in)	38.02 mm (1.497 in)
Clutch	Outer guide I.D.	24.995–25.012 mm (0.9841–0.9847 in)	25.08 mm (0.987 in)
	Spring free length	35.5 mm (1.40 in)	34.0 mm (1.34 in)
	Spring preload/length	21–23.2 kg/23.9 mm (46–51 lb/0.94 in)	—
	Disc thickness	3.72–3.88 mm (0.147–0.153 in)	3.1 mm (0.12 in)
	Plate warpage	—	0.30 mm (0.012 in)
Starter clutch	Driven gear O.D.	47.175–47.200 mm (1.8573–1.8583 in)	47.16 mm (1.857 in)

TORQUE VALUES

Clutch hose oil bolts	25–35 N·m (2.5–3.5 kg-m, 18–25 ft-lb)
Clutch fluid reservoir cover	1–2 N·m (0.1–0.2 kg-m, 0.7–0.9 ft-lb)
Clutch lever pivot nut	5–7 N·m (0.5–0.7 kg-m, 4–5 ft-lb)
Starter clutch bolt	80–100 N·m (8.0–10.0 kg-m, 58–72 ft-lb)
Clutch center lock nut	47–53 N·m (4.7–5.3 kg-m, 34–38 ft-lb)
Starter clutch cover	26–30 N·m (2.6–3.0 kg-m, 19–22 ft-lb)

TOOLS

Special

Snap ring pliers	07914–3230001
Clutch holder	07923–MB00000 not available in U.S.A.

Common

Universal holder	07725–0030000	
Extension bar	07716–0020500	or commercially available in U.S.A.
Lock nut wrench 17 x 27 mm	07716–0020300	or commercially available in U.S.A.
Driver	07749–0010000	
Attachment, 42 x 47 mm	07746–0010300	
Pilot, 35 mm	07746–0040800	

Date of Issue: May, 1982

TROUBLESHOOTING

Clutch lever soft or spongy
1. Air bubbles in hydraulic system
2. Low fluid level
3. Hydarulic system leaking

Clutch lever too hard
1. Sticking piston(s)
2. Clogged hydraulic system

Clutch slips
1. Hydraulic system sticking
2. Discs worn
3. Springs weak

Clutch will not disengage
1. Air bubbles in hydraulic system
2. Low fluid level
3. Hydraulic system leaking
4. Hydraulic system sticking
5. Plates warped

Motocycle creeps with clutch disengaged
1. Air bubbles in hydraulic system
2. Low fluid level
3. Hydraulic system leaking
4. Hydraulic system sticking
5. Plates warped

Excessive lever pressure
1. Hydraulic system sticking
2. Lifter mechanism damaged

Clutch operation feels rough
1. Outer drum slots rough
2. Sticking piston(s)

CLUTCH FLUID REPLACEMENT/ AIR BLEEDING

Check the fluid level with the fluid reservoir parallel to the ground.

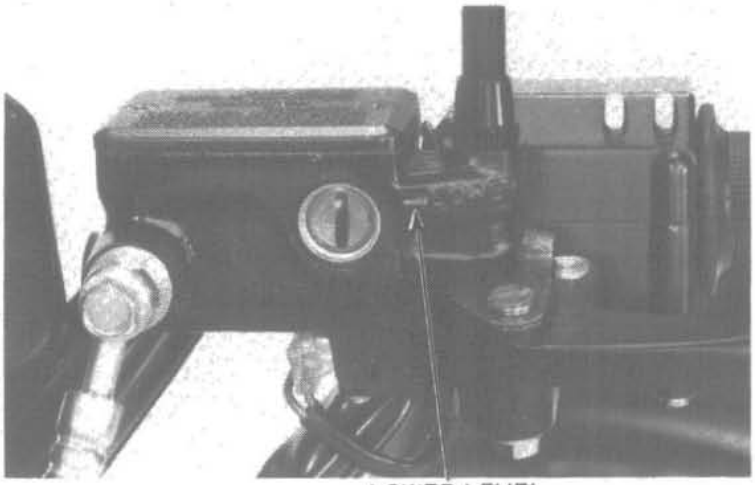

CAUTION:

- Install the diaphragm on the reservoir when operating the clutch lever. Failure to do so will allow clutch fluid to squirt out of the reservoir during clutch operation.
- Avoid spilling fluid on painted surfaces. Place a rag over the fuel tank whenever the system is serviced.

CLUTCH FLUID DRAINING

Connect a bleed hose to the bleed valve.
Loosen the slave cylinder bleed vlave and pump the clutch lever.
Stop operating the lever when no fluid flows out of the bleed valve.

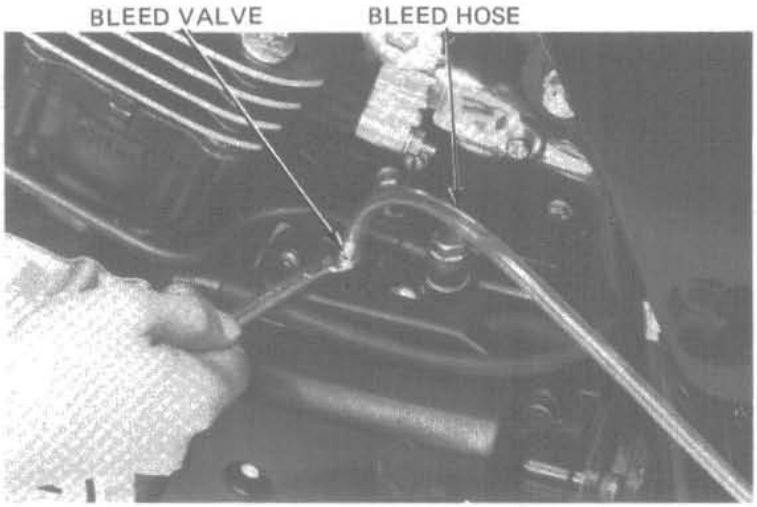

CLUTCH FLUID FILLING

NOTE:

Do not mix different types of fluid since they may not be compatible.

Close the bleed valve, fill the reservoir, and install the diaphragm.
To prevent piston overtravel and clutch fluid seepage, keep a 20 mm (3/4 in) spacer between the handlebar grip and lever when bleeding the clutch system. Pump up the system pressure with the lever until there are no air bubbles in the fluid flowing out of the reservoir small hole and lever resistance is felt. Then bleed the system.

AIR BLEEDING

NOTE:

- Check the fluid level often while bleeding the clutch to prevent air from being pumped into the system.
- Use only DOT 3 brake fluid from a sealed container.
- Do not mix brake fluid types and never reuse the fluid which has been pumped out during bleeding, or the efficiency of the clutch system will be impaired.

Date of Issue: January, 1982

1) Squeeze the clutch lever, open the bleed valve 1/2 turn then close the valve.

NOTE:

> Do not release the clutch lever until the bleed valve has been closed again.

2) Release the clutch lever slowly and wait several seconds after it reaches the end of its travel.

Repeat the above steps until bubbles cease to appear in the fluid at the end of the hose.
Fill the fluid reservoir to the upper level.

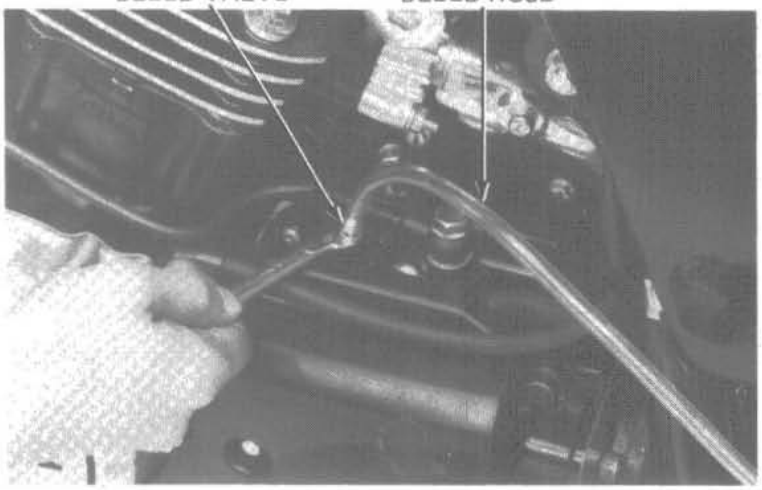

CLUTCH MASTER CYLINDER

DISASSEMBLY

Drain clutch fluid from the hydraulic system.
Remove the rear view mirror and clutch lever.
Disconnect the clutch switch wires and remove the clutch hose.

CAUTION:

> *Avoid spilling clutch fluid on painted surfaces. Place a rag over the fuel tank whenever the clutch system is serviced.*

NOTE:

> When removing the oil bolt, cover the end of the hose to prevent contamination and secure the hose.

Remove the master cylinder.

Remove the push rod boot, and circlip from the master cylinder body.

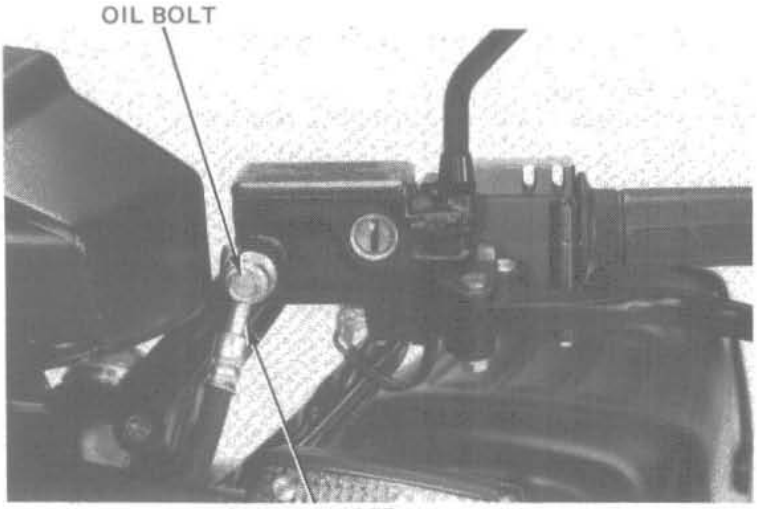

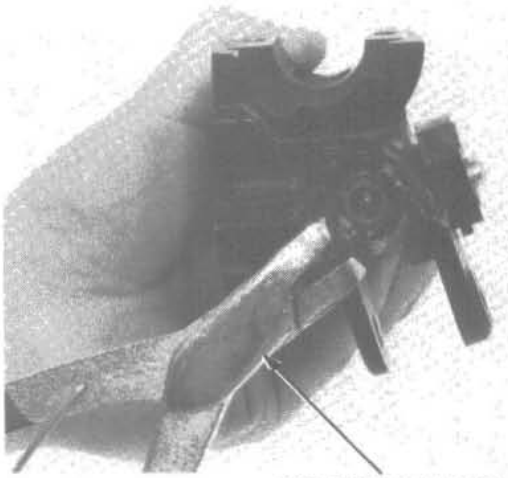

Remove the piston and secondary cup.
Remove the primary cup and spring.
Remove the clutch switch, if necessary.

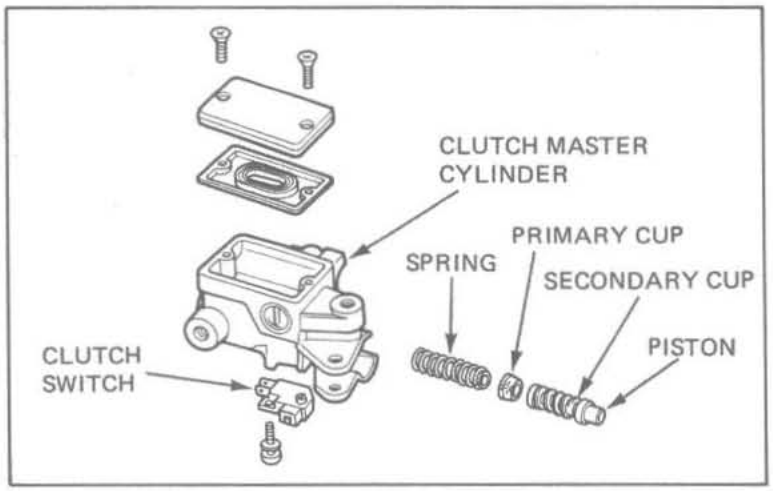

MASTER CYLINDER I.D. INSPECTION

Measure the master cylinder I.D.
Check the master cylinder for scores, scratches or nicks.

SERVICE LIMIT: 14.06 mm (0.553 in)

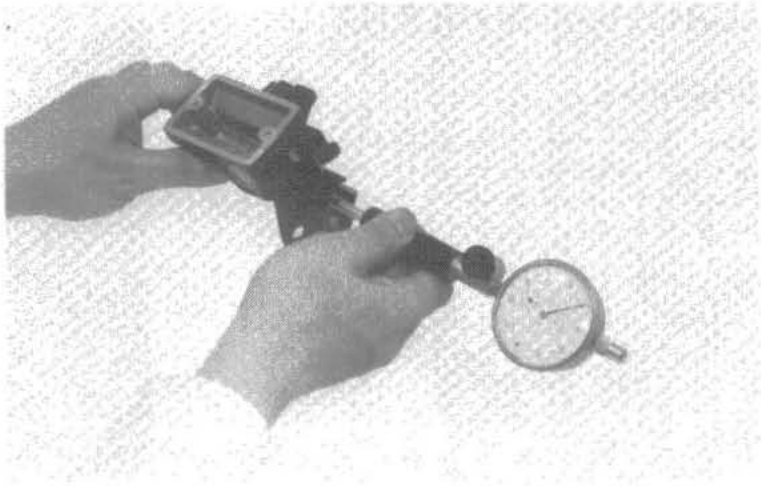

MASTER PISTON O.D. INSPECTION

Measure the master piston O.D.

SERVICE LIMIT: 13.94 mm (0.549 in)

Check the primary and secondary cups for damage before assembly.

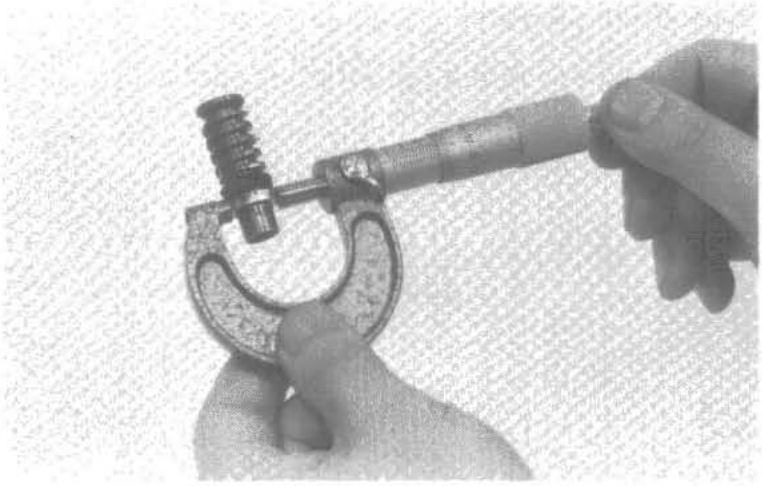

Date of Issue: January, 1982

ASSEMBLY

CAUTION:

Handle the master piston, spring, primary cup and secondary cup as a set.

Coat all parts with clean brake fluid before assembly.
Install the spring, primary cup and piston.

CAUTION:

When installing the cups, do not allow the lips to turn inside out.

Install the circlip making sure it is seated firmly in the groove.
Install the boot and push rod.
Install the clutch switch, if it was removed.

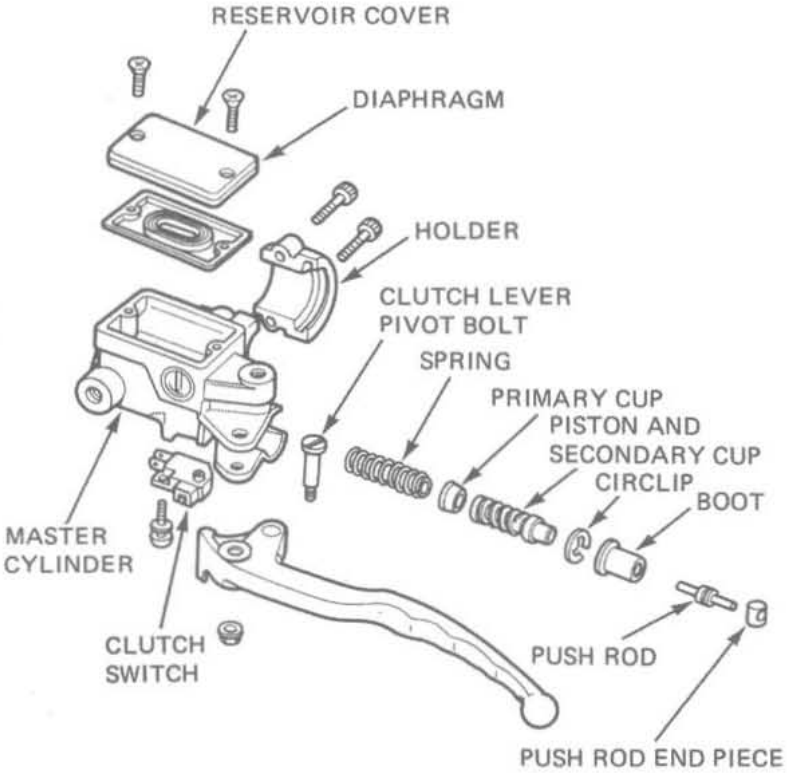

Place the master cylinder on the handlebar and install the holder and the two mounting bolts. Tighten the top bolt first then the bottom bolt.

Install the oil hose with the bolt and its two sealing washers.
Install the push rod end piece into the clutch lever hole and install the clutch lever.
Connect the clutch switch wires to the switch terminals.
Fill the reservoir and bleed the clutch system (page 7-4).

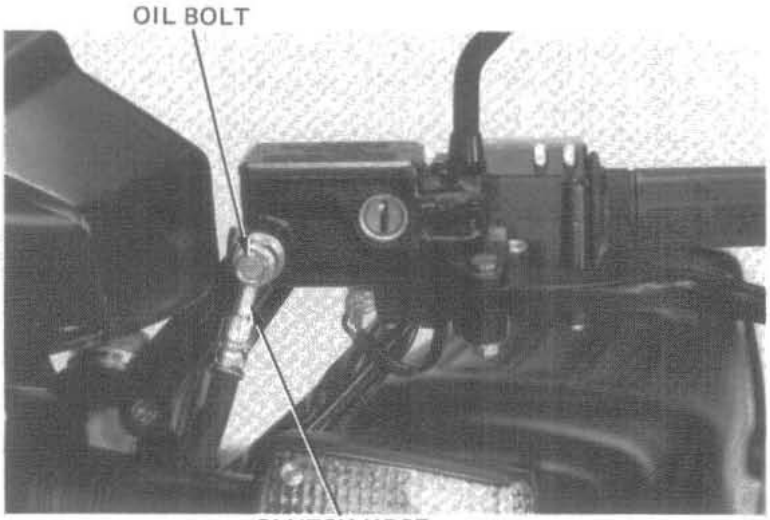

CLUTCH SLAVE CYLINDER

DISASSEMBLY

Remove the left crankcase rear cover.

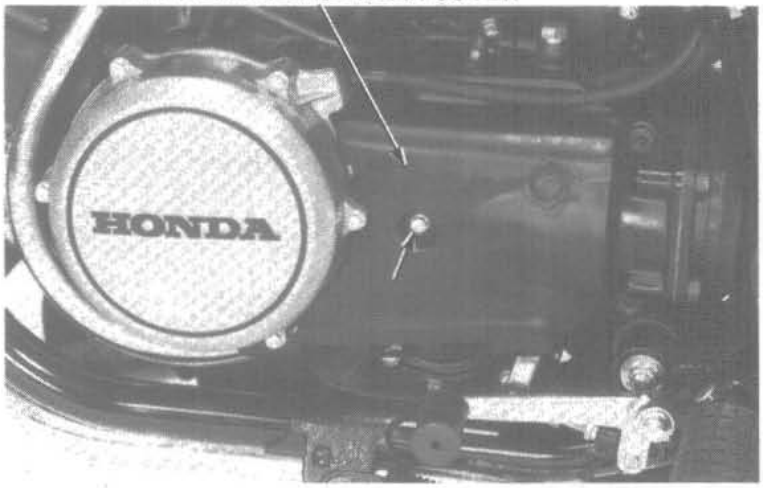

Place a container under the slave cylinder, remove the oil bolt and disconnect the clutch hose.

NOTE:

> Avoid spilling clutch fluid on painted surfaces.

Remove the slave cylinder.

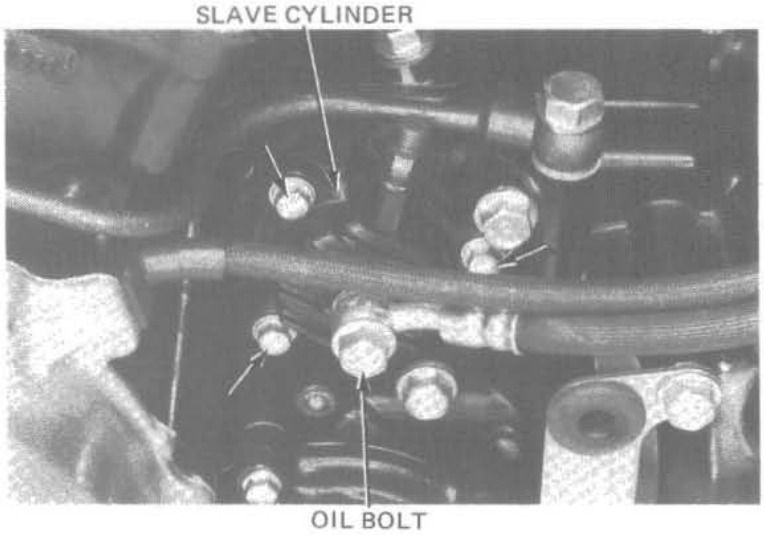

Place a shop towel over the piston to cushion the piston when it is expelled, and position the cylinder with the piston down.
Apply compressed air to the fluid inlet to remove the piston. Use the air in short spurts.

Remove the spring from the slave cylinder.

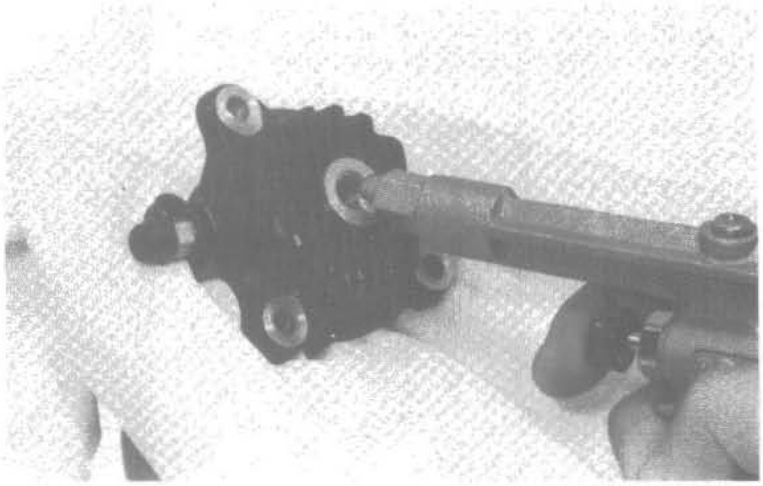

Date of Issue: October, 1982

Remove the oil and piston seals.
Clean the piston groove with clutch fluid.
Check the piston spring for weakness or damage.

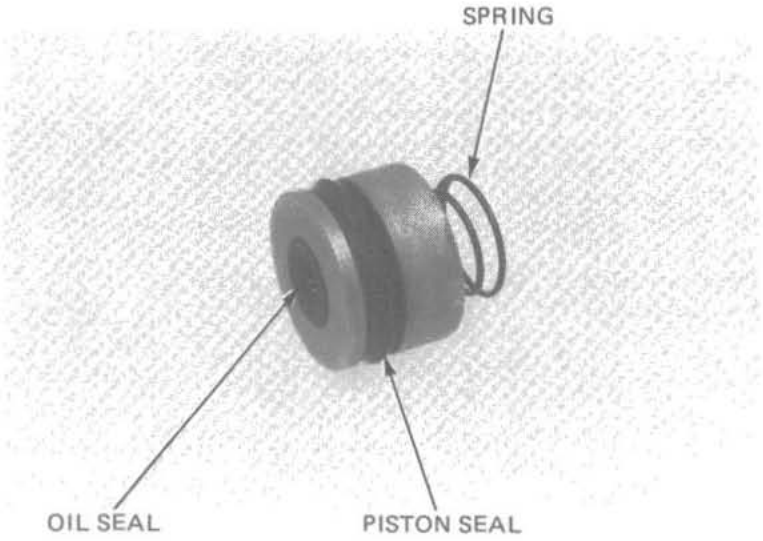

PISTON O.D. INSPECTION

Check the piston for scoring or scratches.
Measure the outside diameter of the piston with a micrometer.

SERVICE LIMIT: 38.02 mm (1.497 in)

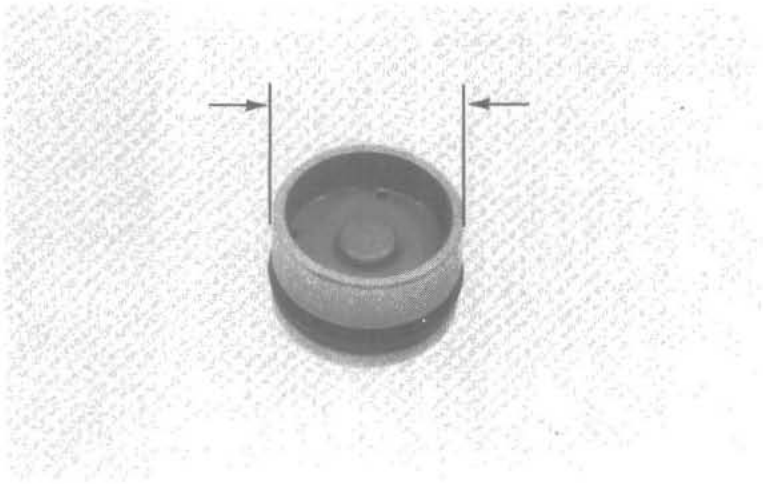

CYLINDER I.D. INSPECTION

Check the slave cylinder for scoring or scratches.
Measure the inside diameter of the cylinder bore.

SERVICE LIMIT: 38.18 mm (1.503 in)

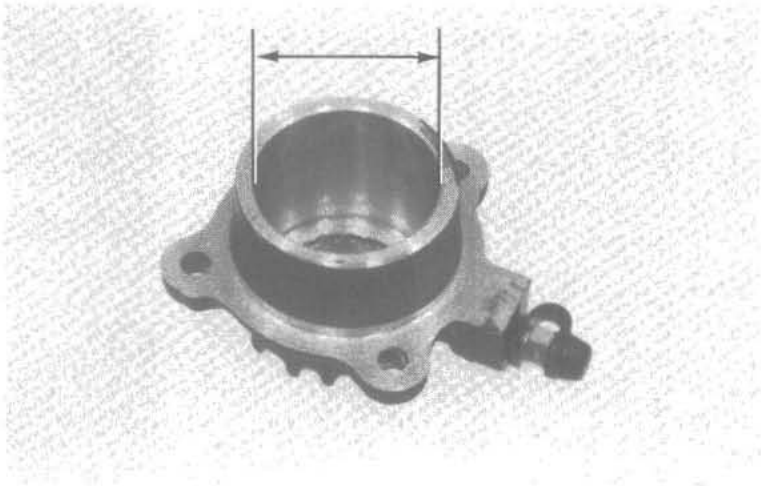

ASSEMBLY

Assemble the slave cylinder in the reverse order of disassembly. The oil seals must be replaced with new ones whenever they have been removed.
Lubricate the piston and piston seal with a medium grade of Hi-Temperature silicone grease or brake fluid before assembly.
Be certain the piston seal is seated in the piston groove.
Place the piston in the cylinder with the oil seal end facing out.

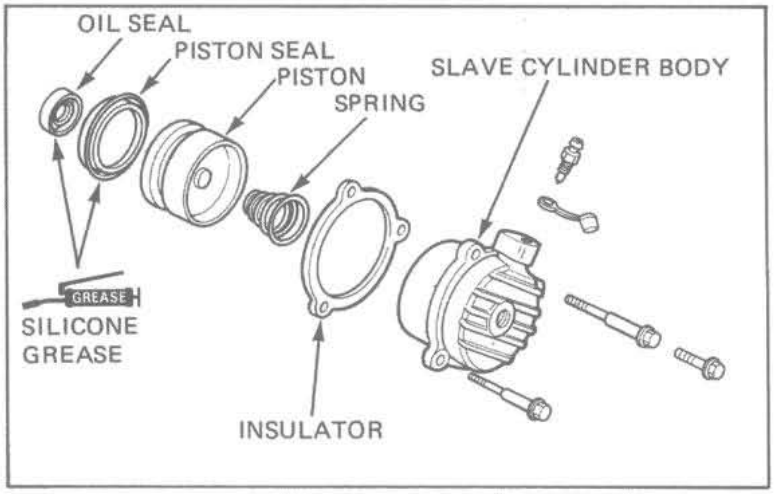

Install the insulator and slave cylinder.
Connect the clutch hose with the oil bolt and the two sealing washers.

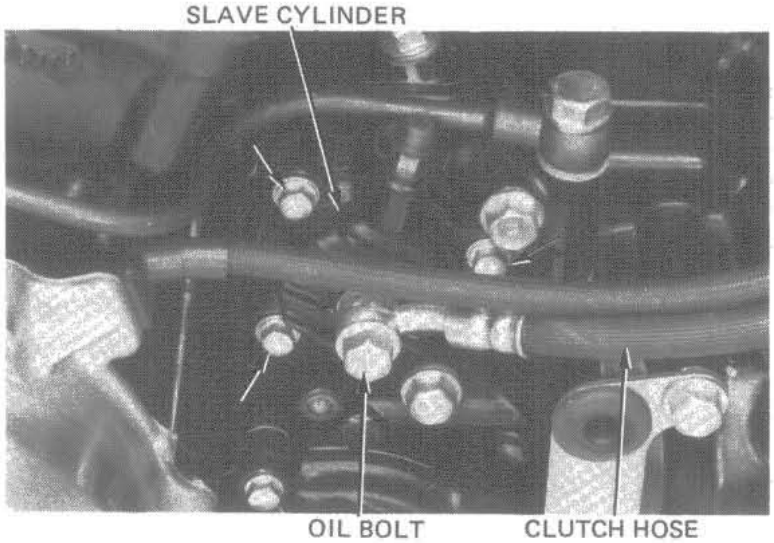

Install the left crankcase rear cover.
Fill the clutch fluid reservoir and bleed the clutch system (page 7-4).

Date of Issue: January, 1982

CLUTCH COVER REMOVAL

Drain the engine oil.
Remove the clutch cover, gasket and dowel pins.

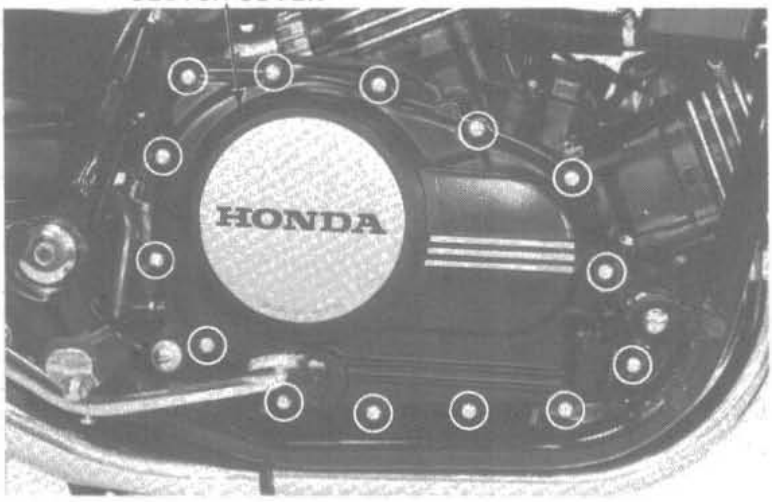

STARTER CLUTCH DISASSEMBLY

Remove the starter idle gear shaft and gear.

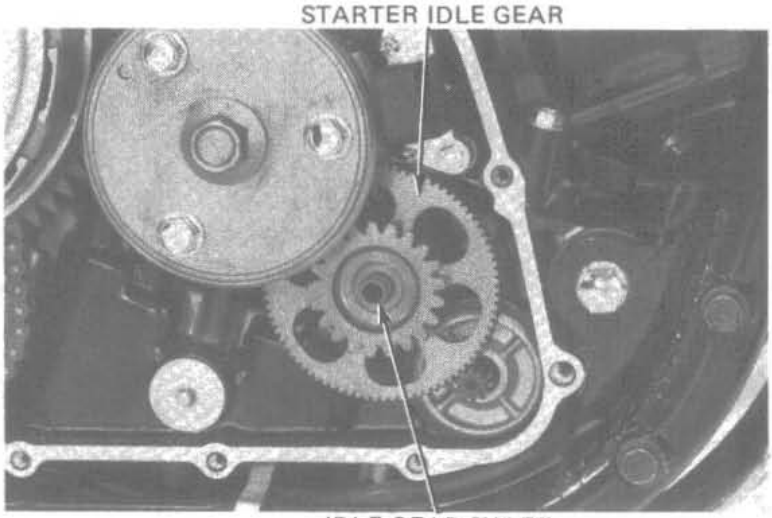

Remove the alternator cover. Hold the flywheel with a universal holder.

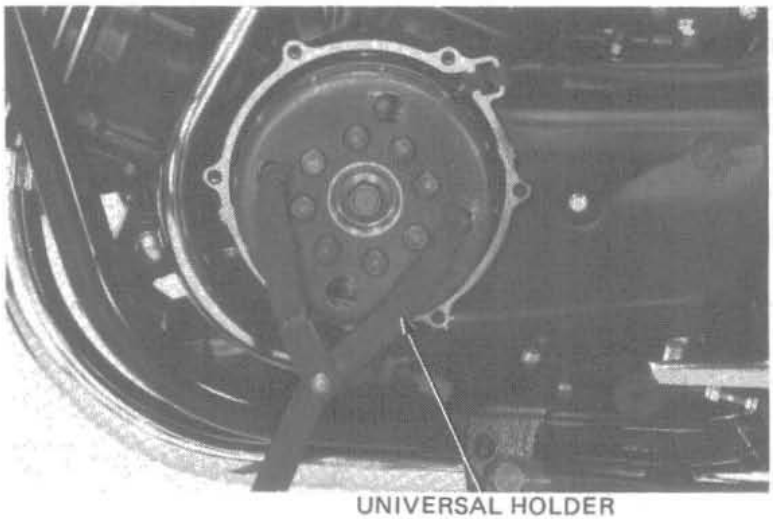

Remove the starter clutch bolt.
Remove the starter clutch assembly and spacer.

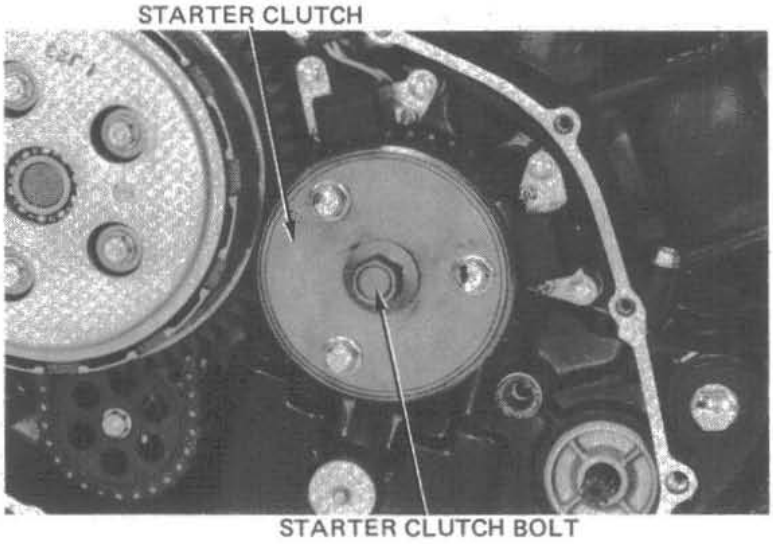

Shift the primary driven sub gear with a screwdriver to take preload off the primary drive gear and remove the primary drive gear.

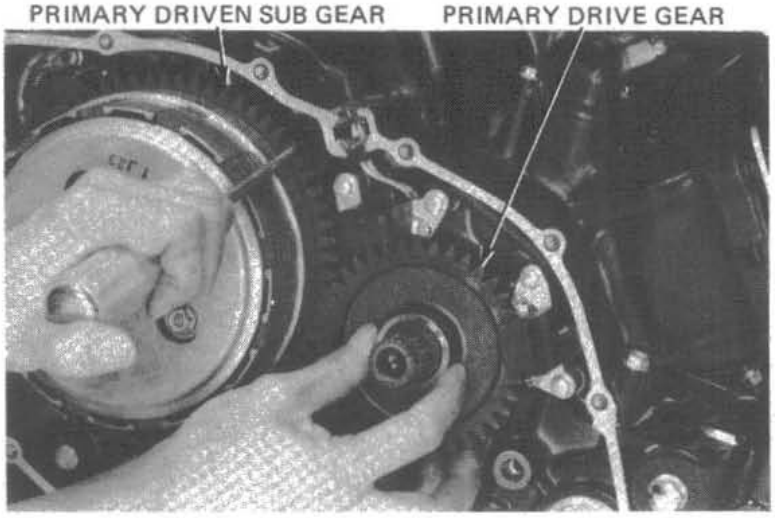

Remove the starter driven gear and needle bearing from the starter clutch.
Inspect the rollers for smooth operation.
Remove the starter clutch cover by removing the three bolts.
Remove the clutch rollers, plungers and springs.
Check the rollers for excessive wear.

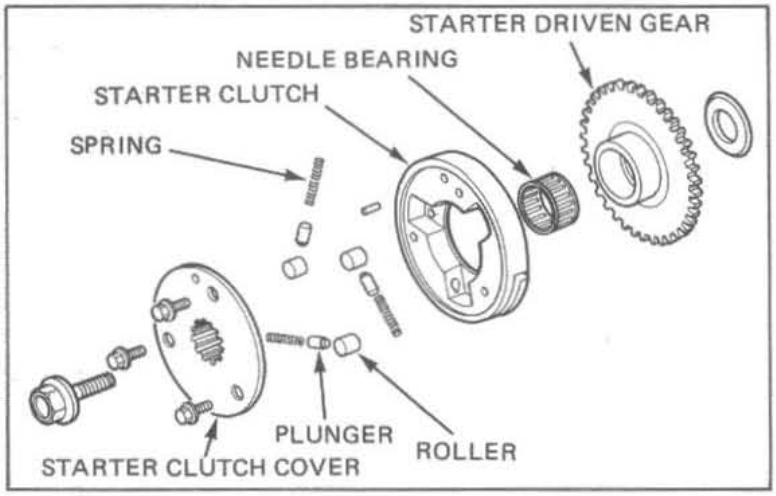

Date of Issue: May, 1982

STARTER DRIVEN GEAR INSPECTION

Inspect the driven gear for damage or excessive wear.
Measure the driven gear O.D.

SERVICE LIMIT: 47.16 mm (1.857 in)

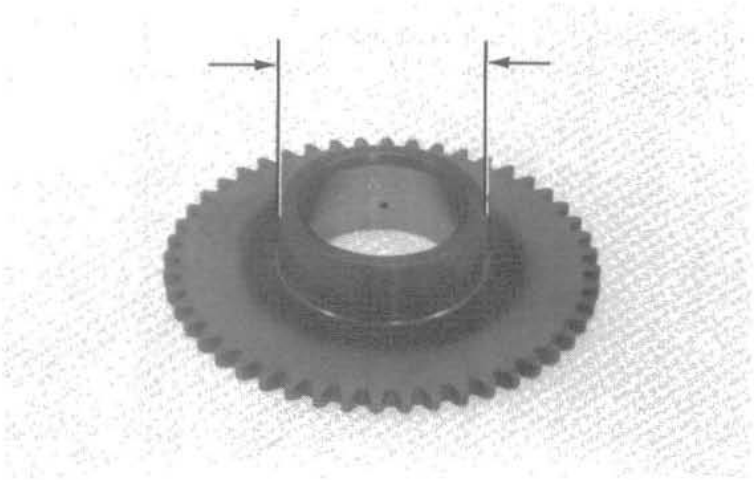

CLUTCH DISASSEMBLY

NOTE:

> Do not operate the clutch lever after removing the clutch. To do so will cause difficulty in reassembling the clutch.

Remove the bolts and clutch springs.

NOTE:

> Loosen the bolts in a crisscross pattern in 2–3 steps.

Remove the clutch pressure plate with the clutch lifter guide and release bearing.

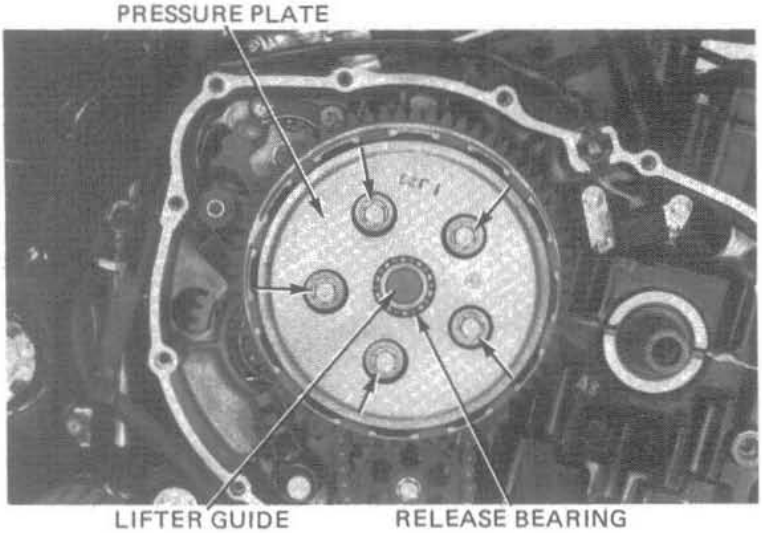

Remove the clutch lifter rod, clutch discs and plates.

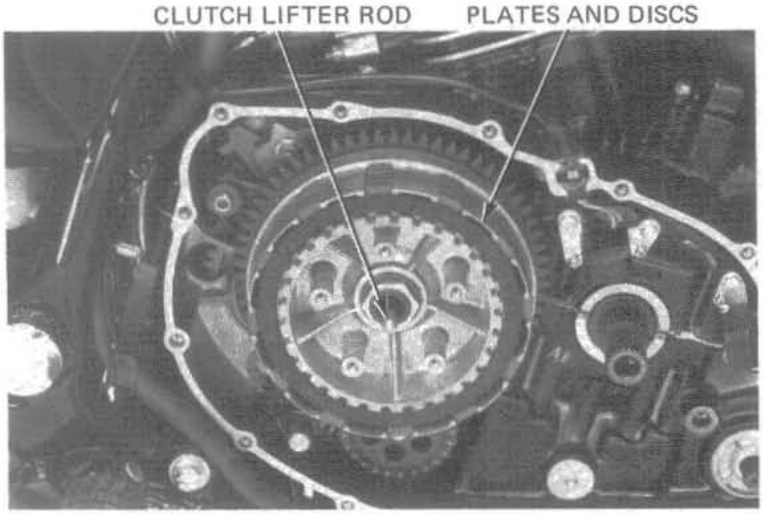

Hold the clutch center with the clutch holder and remove the lock nut and lock washer.
Remove the clutch center, clutch outer and clutch outer guide.

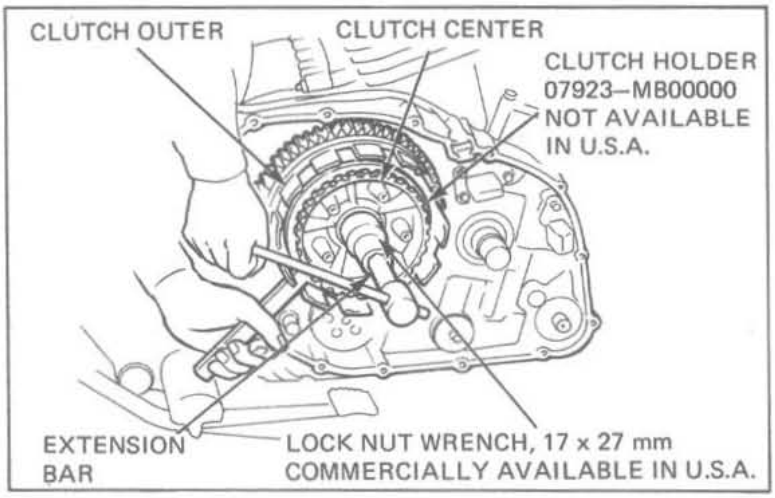

CLUTCH SPRING INSPECTION

Measure the clutch spring free length.

SERVICE LIMIT: 34.0 mm (1.34 in)

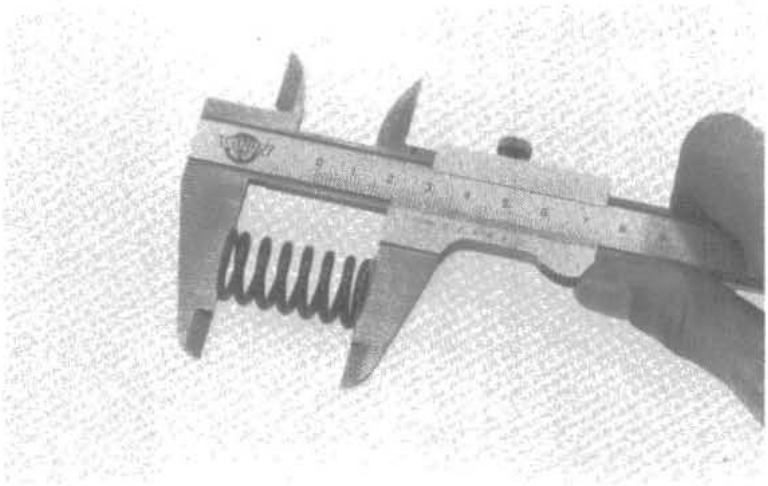

CLUTCH DISC INSPECTION

Replace the clutch discs if they show signs of scoring or discoloration.
Measure the thickness of each disc.

SERVICE LIMIT: 3.1 mm (0.12 in)

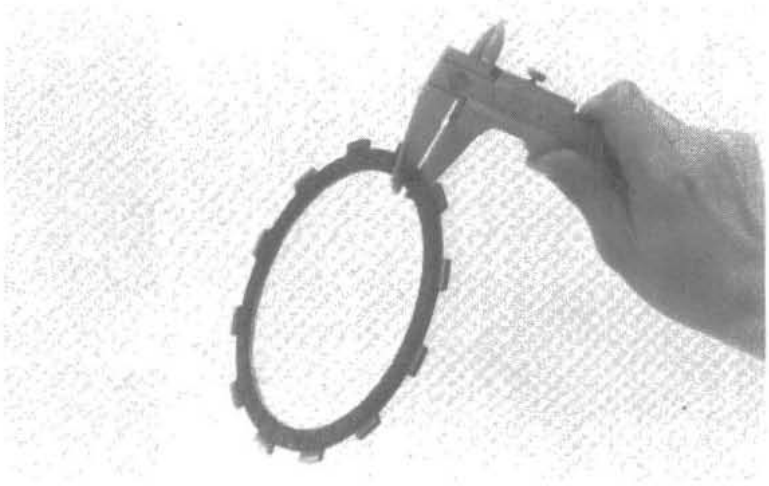

Date of Issue: May, 1982

CLUTCH PLATE INSPECTION

Check for plate warpage on a surface plate, using a feeler gauge.

SERVICE LIMIT: 0.30 mm (0.012 in)

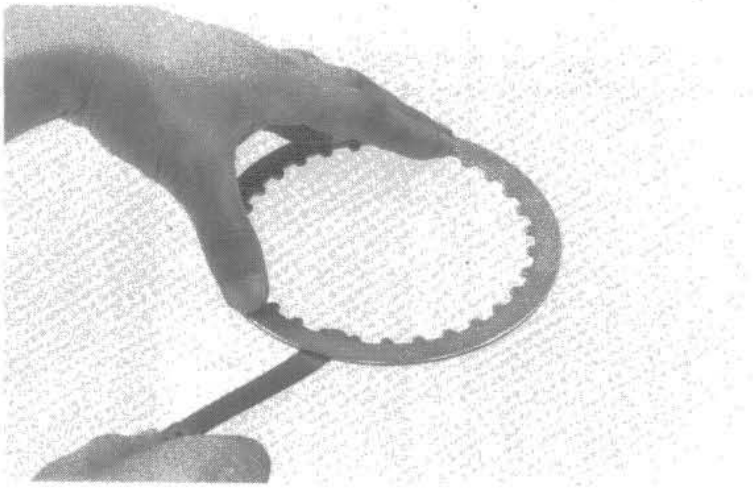

CLUTCH OUTER GUIDE INSPECTION

Measure the I.D. of the clutch outer guide.

SERVICE LIMIT: 25.08 mm (0.987 in)

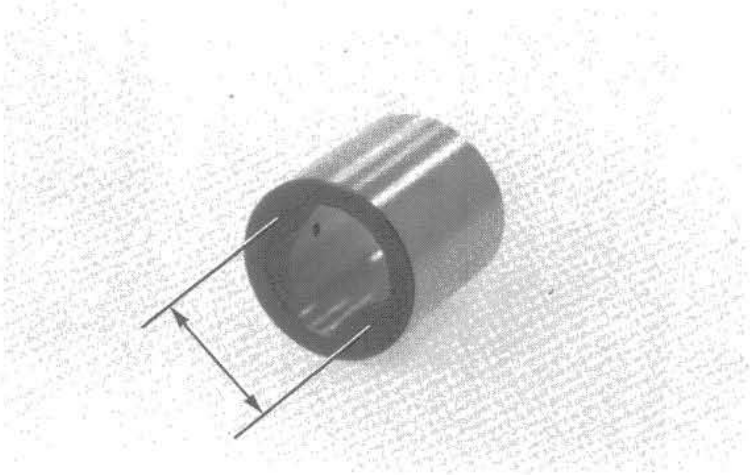

CLUTCH OUTER INSPECTION

Check the slots in the clutch outer for nicks, cuts or indentations made by the friction discs.
Check the clutch outer needle bearing for damage or excessive play.

If the needle bearing is difficult to remove from the clutch housing, use the following tools.
Driver handle A: 07749–0010000
Driver outer, 42 x 47 mm: 07746–0010300
Driver pilot, 35 mm: 07746–0040800

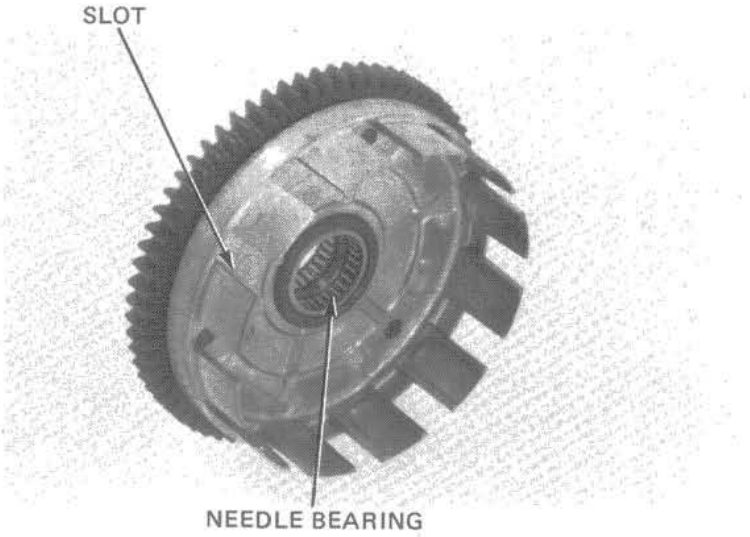

CLUTCH ASSEMBLY

Install the clutch outer guide over the mainshaft. Install the needle bearing into the clutch outer.

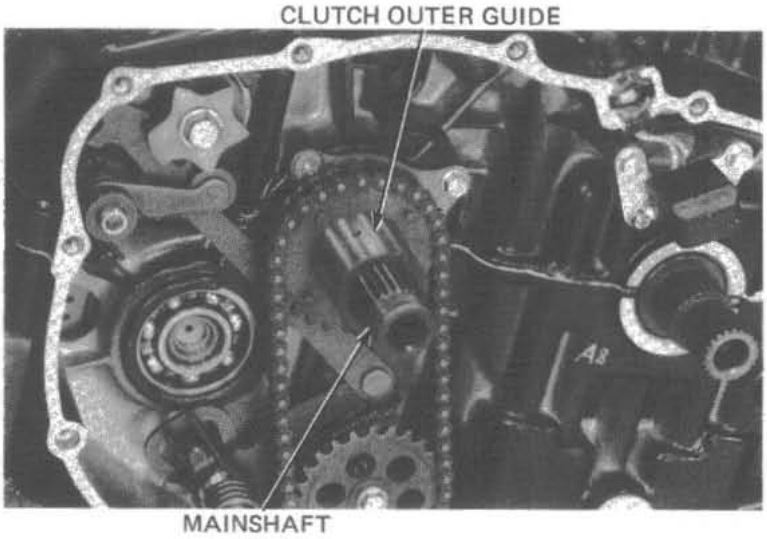

Align the holes in the clutch outer with the pins on the oil pump drive sprocket and install the clutch outer.

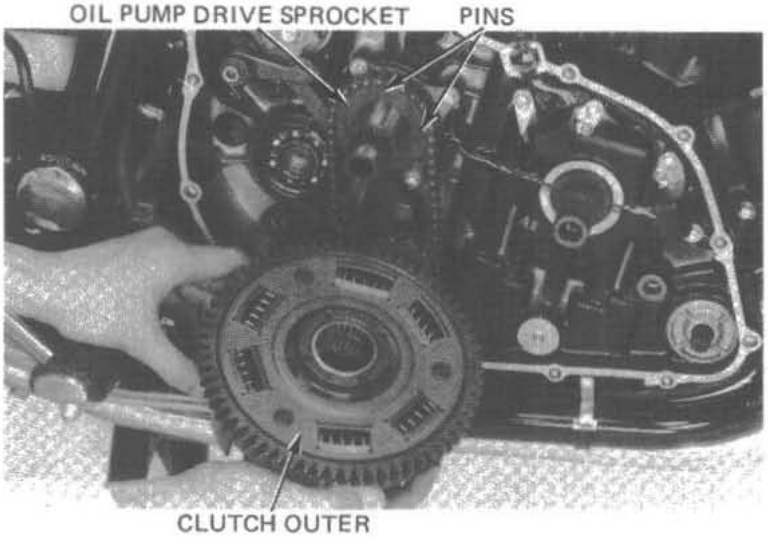

Install the clutch center.

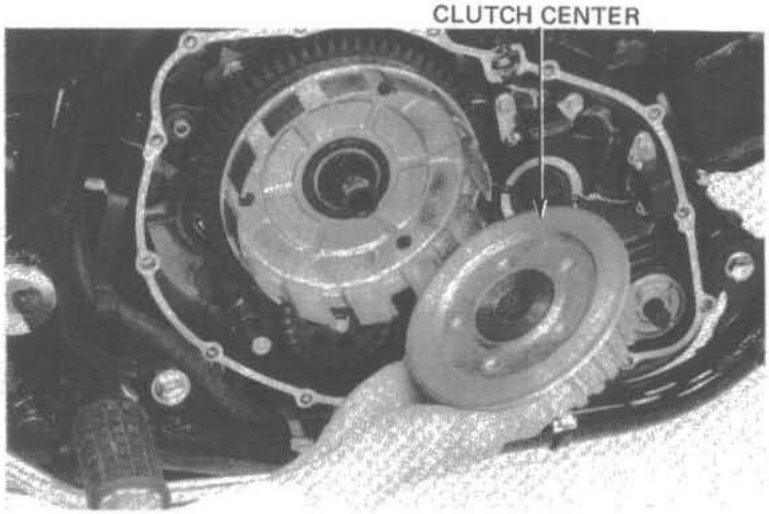

Date of Issue: January, 1982

Install the lock washer with the dished side facing inside, and install the lock nut.

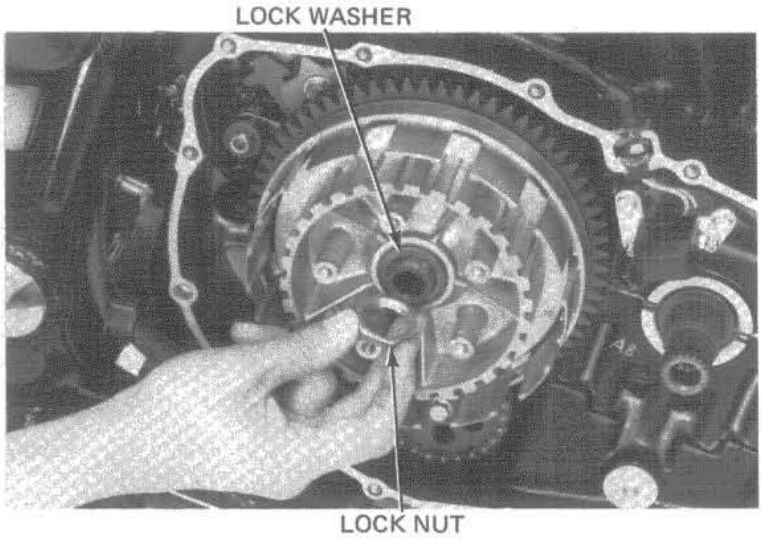

Hold the clutch center with the clutch holder and tighten the lock nut.

TORQUE: 47–53 N·m (4.7–5.3 kg-m, 34–38 ft-lb)

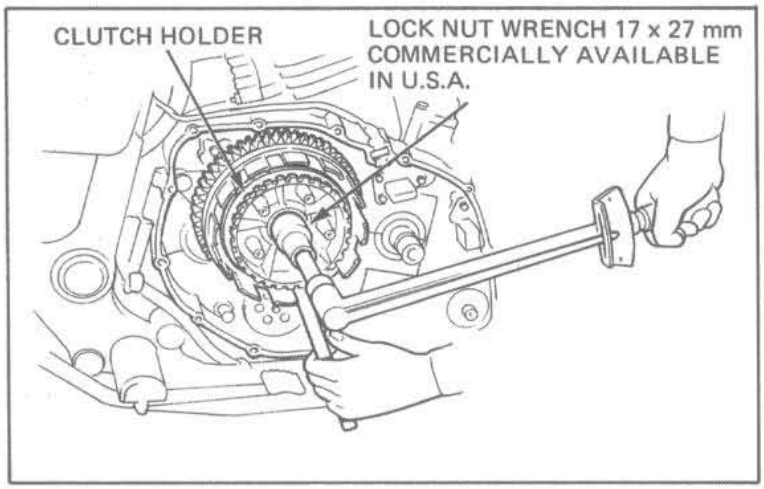

Coat the discs and plates with clean engine oil.
Install the clutch discs and plates as shown.

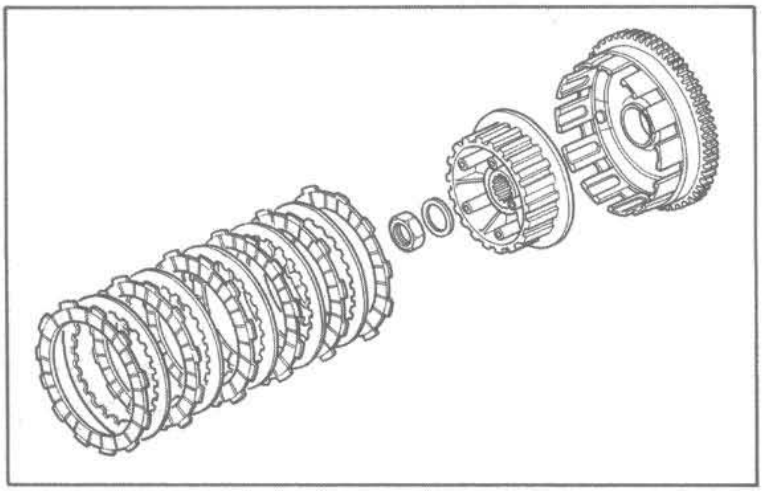

Insert the lifter rod into the mainshaft.
Install the clutch release bearing and lifter guide into the clutch pressure plate.
Install the clutch pressure plate.

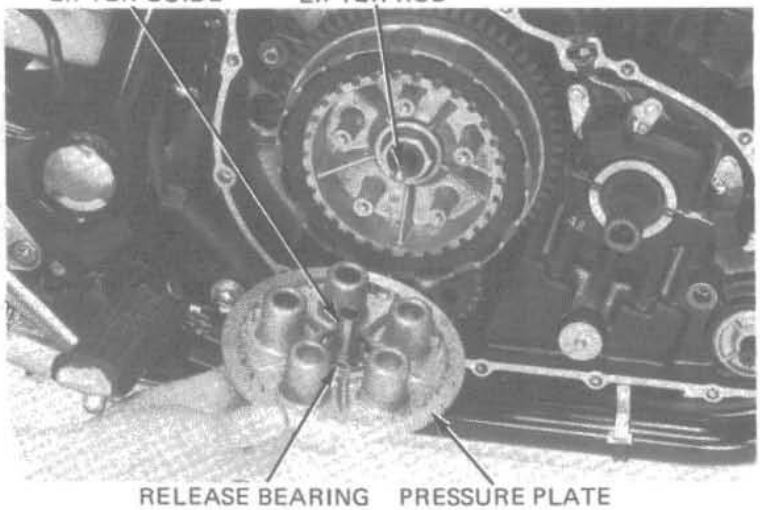

Install the clutch springs, plain washers and bolts.

NOTE

Tighten the bolts evenly in 2–3 steps in a crisscross pattern.

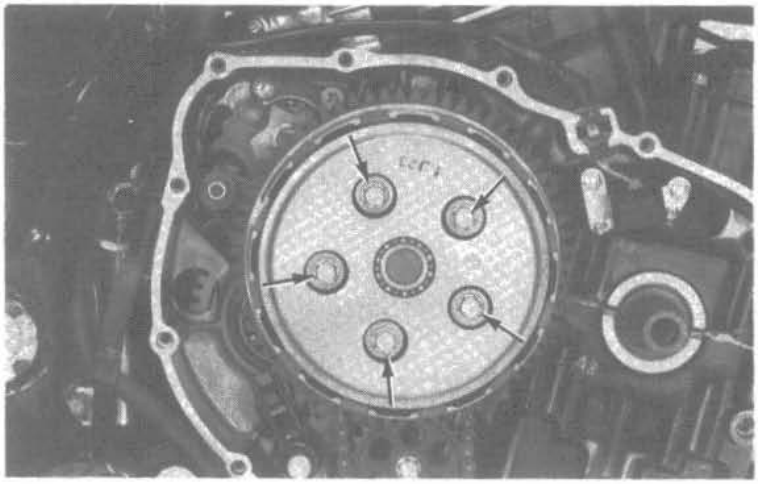

STARTER CLUTCH ASSEMBLY

Install the primary drive gear onto the crankshaft while moving the primary driven sub gear with a screwdriver.

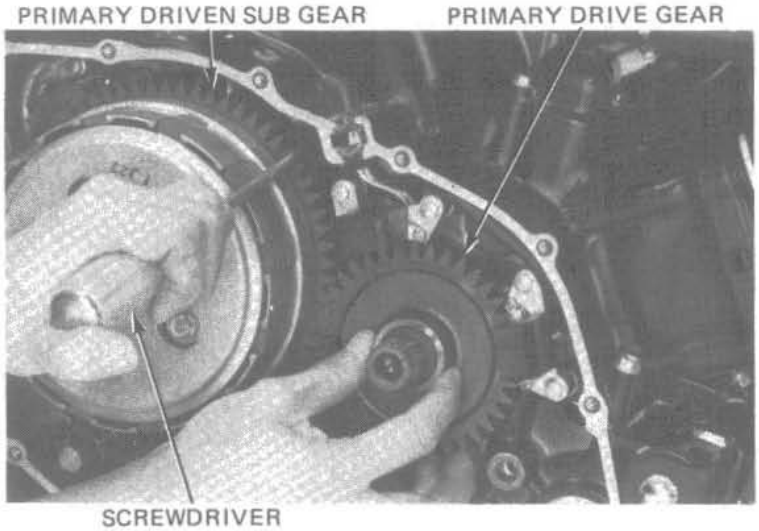

Install the thrust washer on the crankshaft.

Install the starter idle gear and shaft.

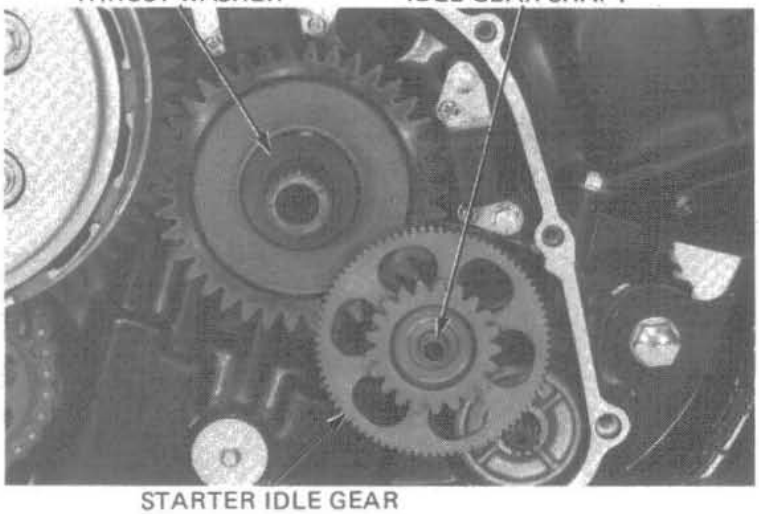

Install the springs, plungers and rollers into the starter clutch.
Install the dowel pin.
Install the starter clutch cover aligning the dowel pin hole with the dowel pin and tighten the bolts.

TORQUE: 26–30 N·m (2.6–3.0 kg-m, 19–22 ft-lb)

NOTE

Apply a locking agent to the bolt threads.

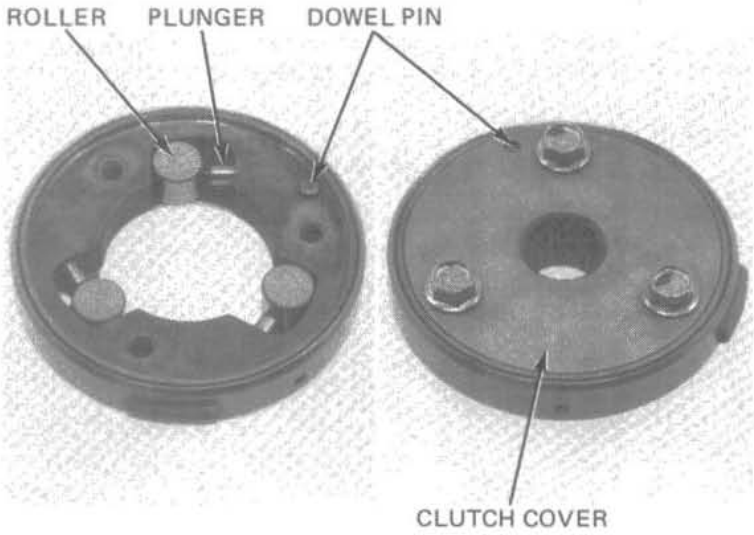

Install the starter driven gear by turning it counter-clockwise.

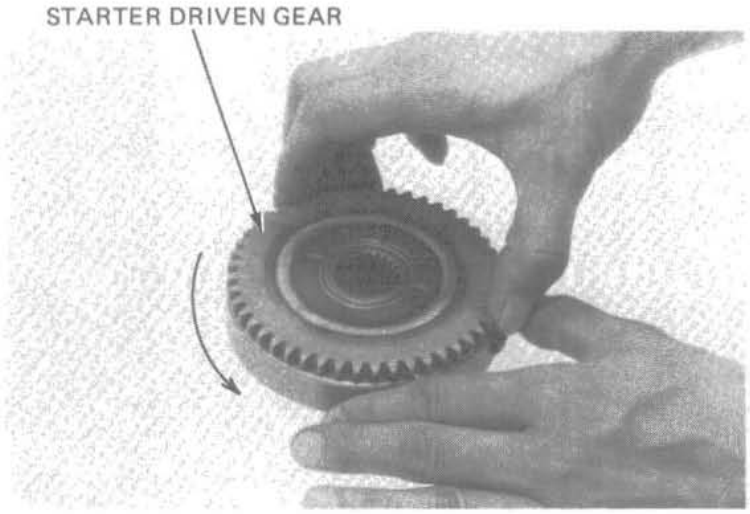

Align the punch marks on the starter clutch and crankshaft and install the starter clutch.

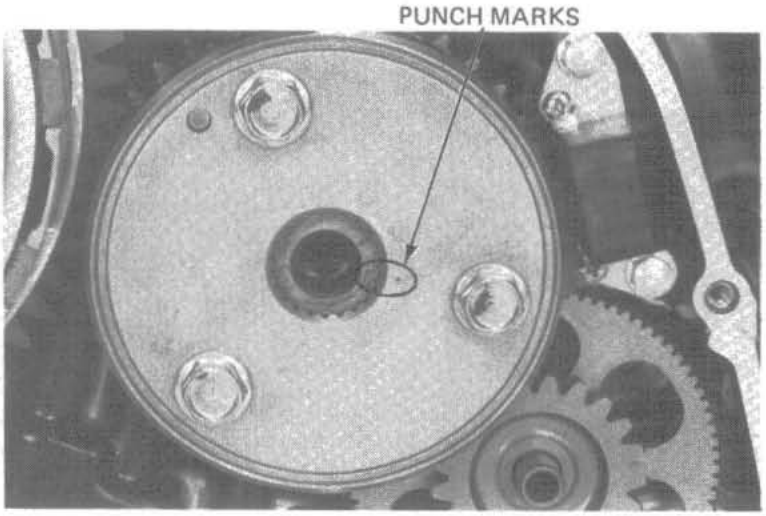

Hold the flywheel with a universal holder and tighten the starter clutch bolt to the specified torque.

TORQUE: 80–100 N·m (8.0–10.0 kg-m, 58–72 ft-lb)

Install the alternator cover.

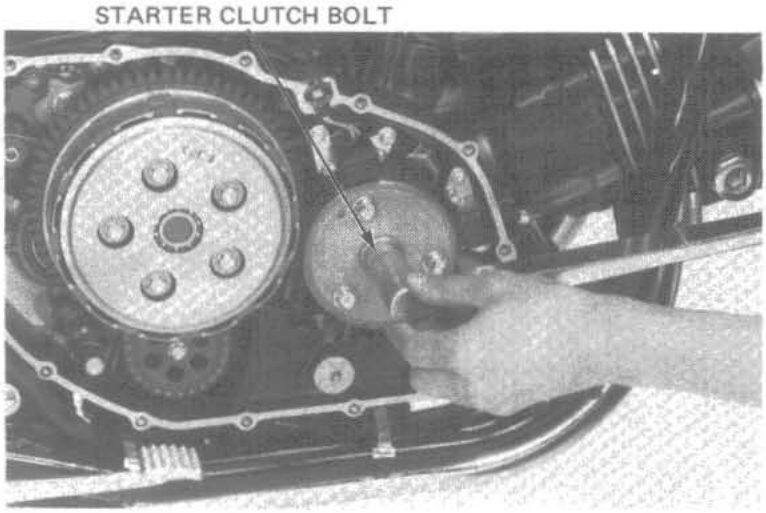

CLUTCH COVER INSTALLATION

Install the dowel pins and a new gasket.

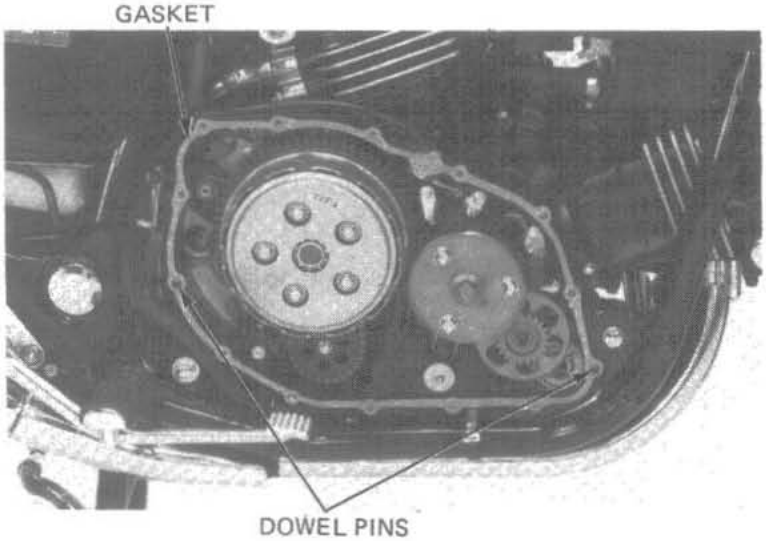

Install the clutch cover.
Fill the crankcase with oil (page 2-3).

CLUTCH COVER

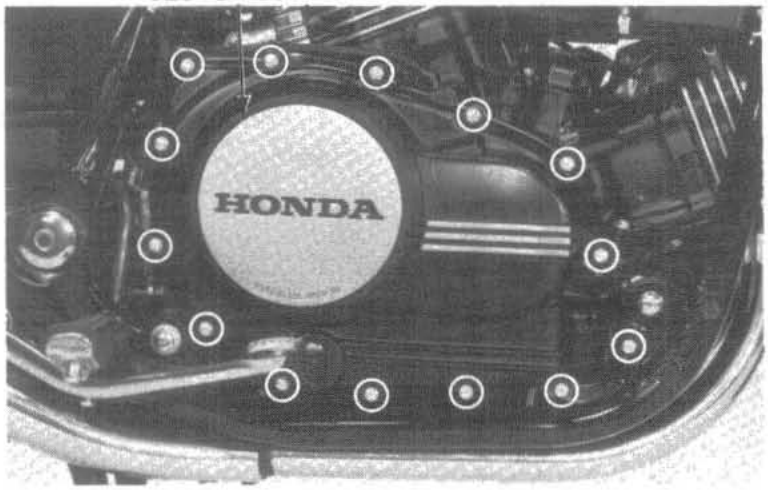

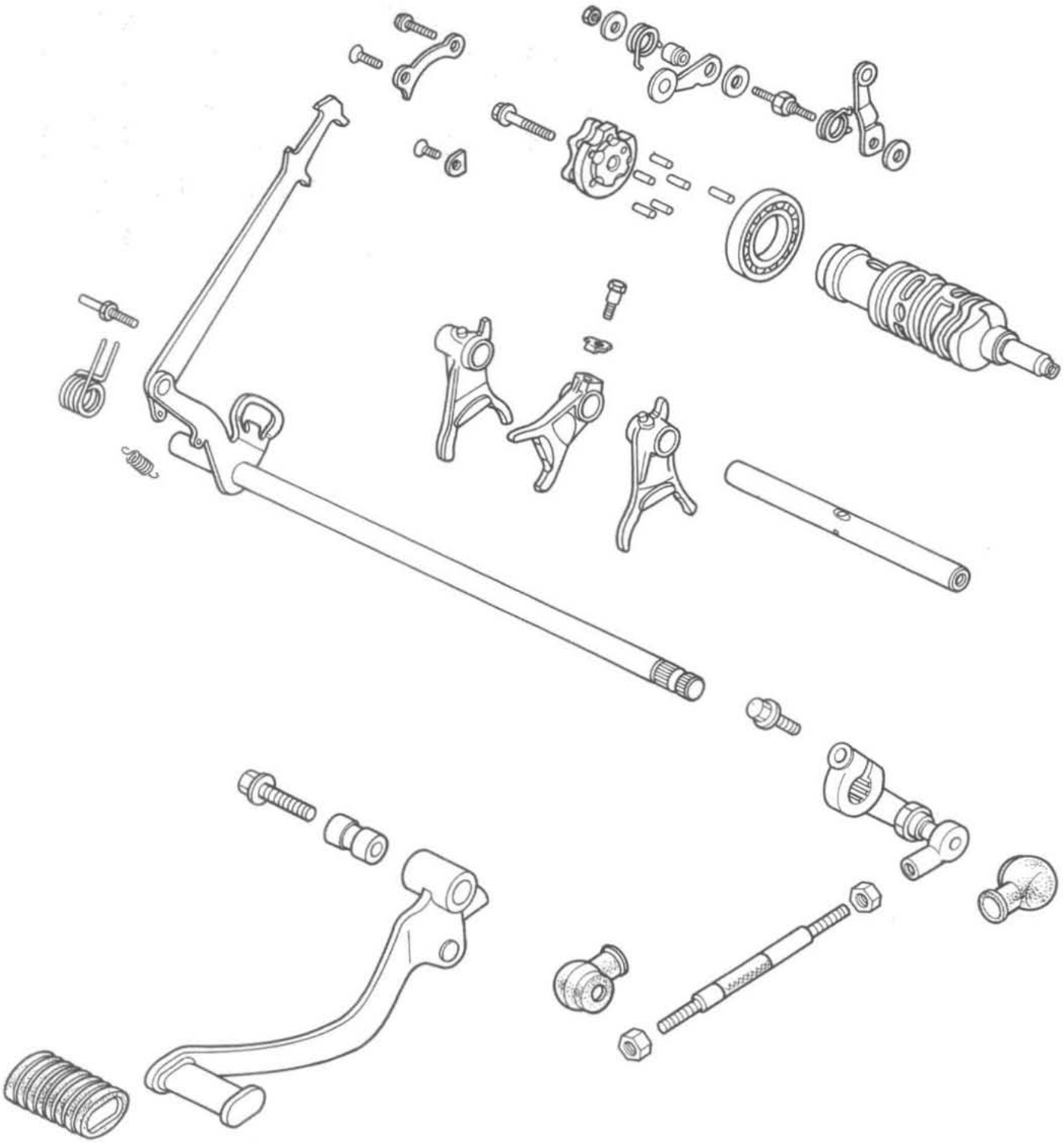

Date of Issue: May, 1982

8. GEARSHIFT LINKAGE

SERVICE INFORMATION

GENERAL

- The gearshift spindle and stopper arms can be serviced with the engine in the frame.
- If the shift forks, drum and transmission require servicing, remove the engine and separate the crankcase.

TROUBLESHOOTING

Hard to shift

1. Improper clutch hydraulic system; air bubbles in system
2. Shift forks bent
3. Shift claw bent
4. Shift drum cam grooves damaged

Transmission jumps out of gear

1. Gear dogs worn
2. Shift shaft bent
3. Shift drum stopper broken
4. Shift forks bent

GEARSHIFT LINKAGE REMOVAL

Drain the engine oil.
Remove the left crankcase rear cover.

Remove the gearshift pedal, clutch cover and clutch assembly (section 7).

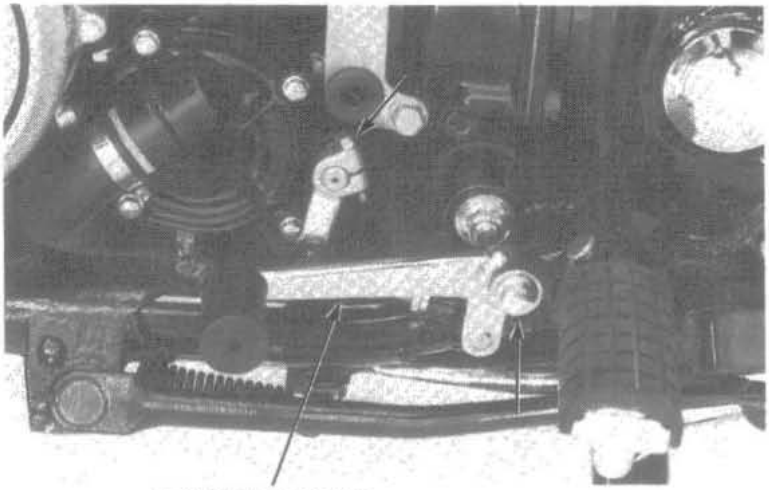

Remove the oil pump driven sprocket bolt.
Remove the oil pump drive chain, drive and driven sprockets.

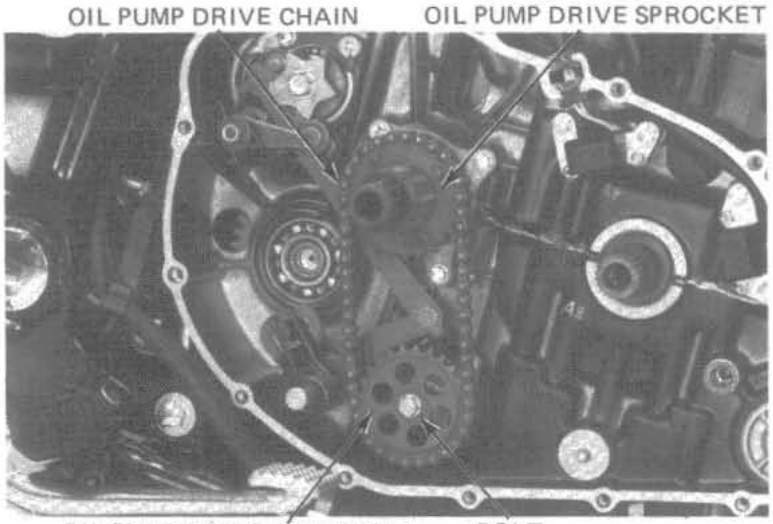

Date of Issue: May, 1982

Remove the drum stopper arm nut, arm and spring.

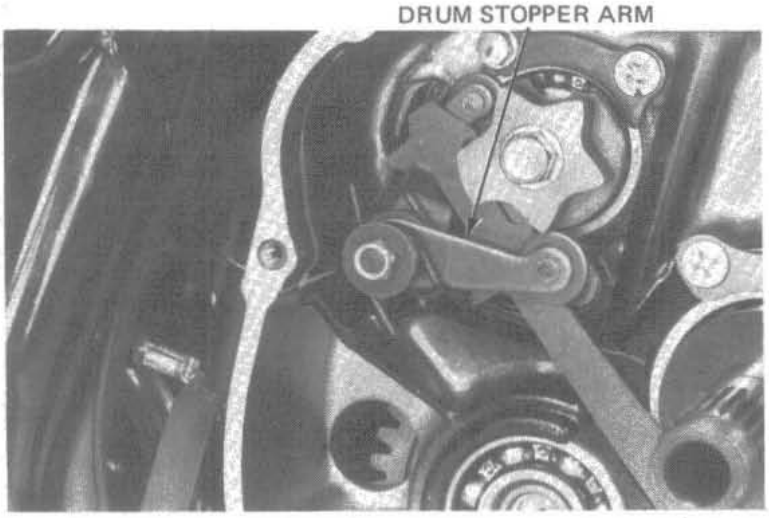

Pull the gearshift spindle assembly out of the crankcase.

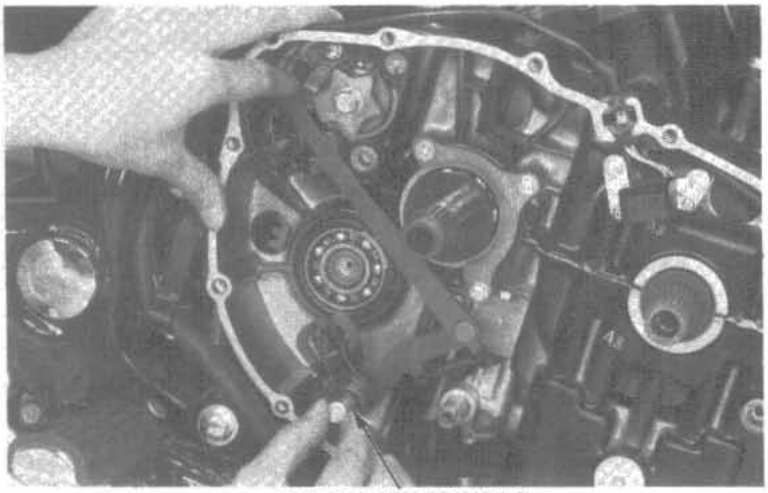

Remove the neutral stopper arm bolt, arm and spring.

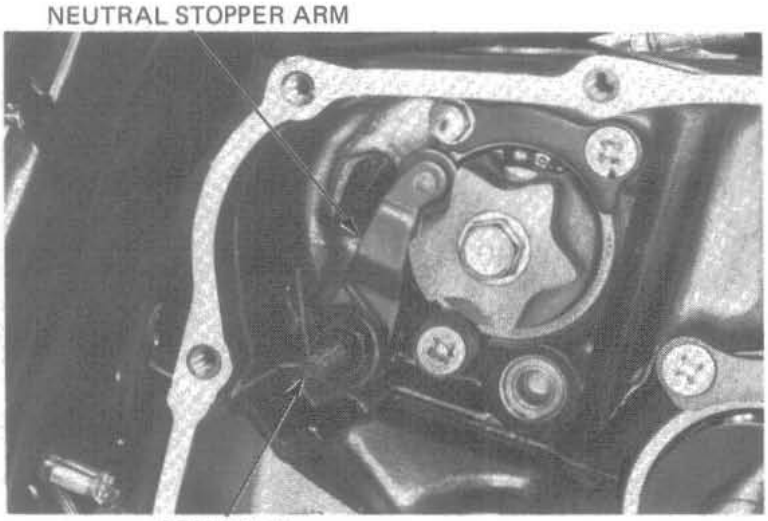

Remove the shift drum cam plate bolt and cam plate.

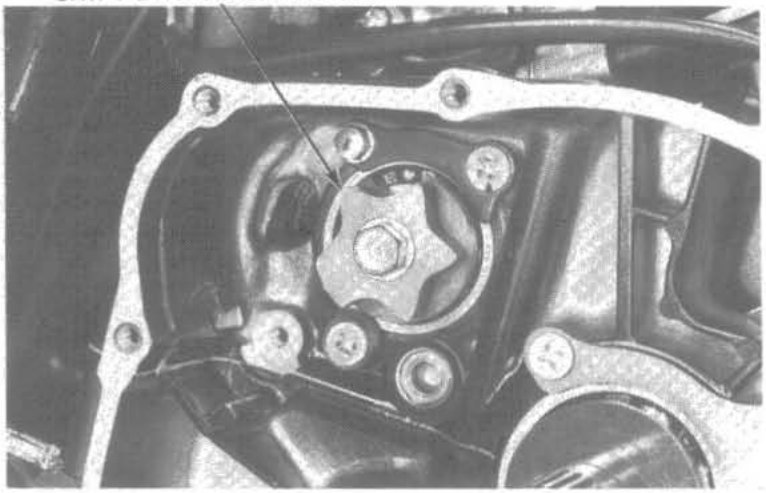

GEARSHIFT LINKAGE INSTALLATION

Install the dowel pin in the hole of the shift drum.
Insert the five pins in the holes of the cam plate.
Align the cam plate hole with the dowel pin on the shift drum and install the cam plate.
Tighten the bolt securely.

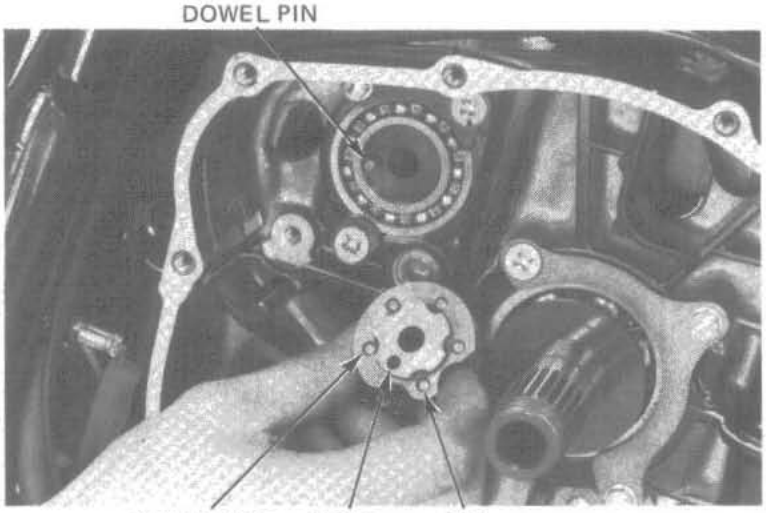

Install the washer, neutral stopper arm, spring and arm bolt.
Tighten the arm bolt securely.

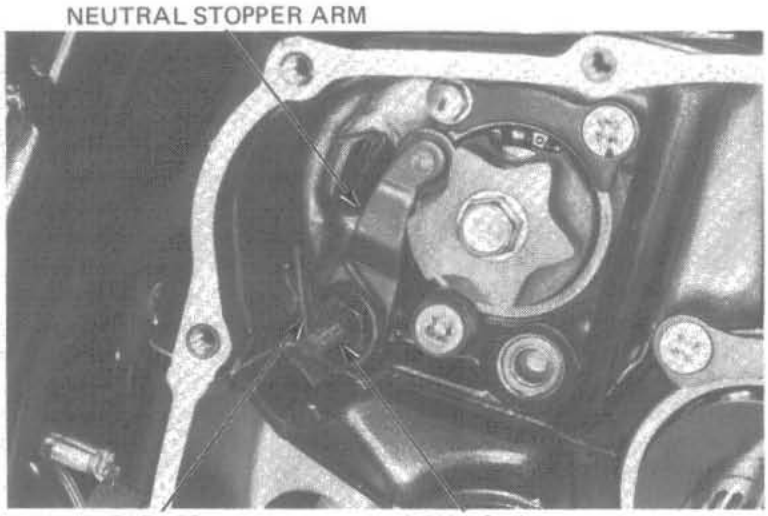

Assemble the gearshift spindle and return spring and install as shown.

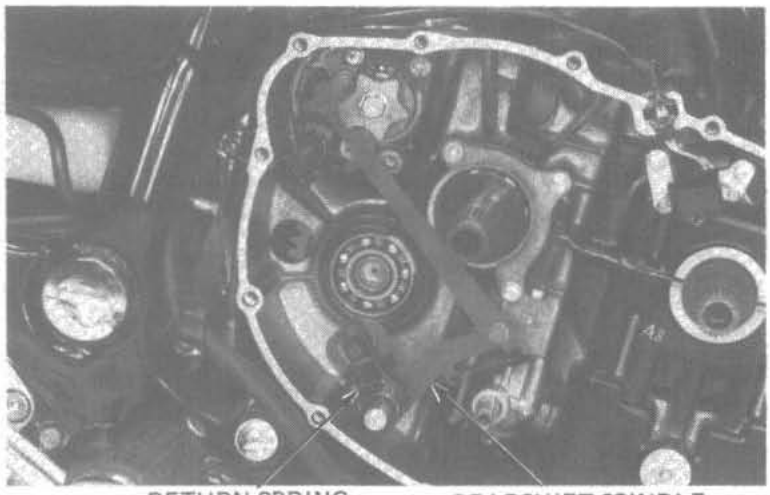

Install the washer, drum stopper arm, collar, spring, washer and nut over the arm bolt.
Tighten the nut securely.
Rotate the gearshift spindle and check the linkage for smooth operation.

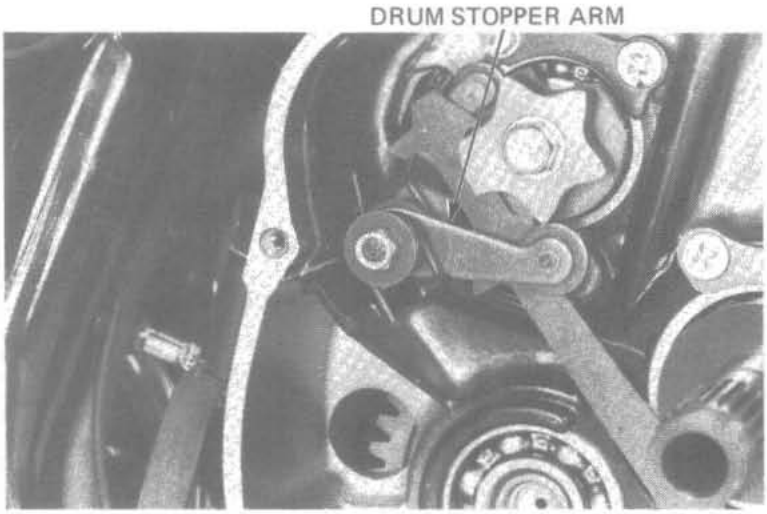

Install the oil pump drive and driven sprockets with drive chain and tighten the driven sprocket bolt securely.

NOTE:

> The driven sprocket has an "IN" mark that must face the crankcase.

Install the clutch assembly and cover (section 7).

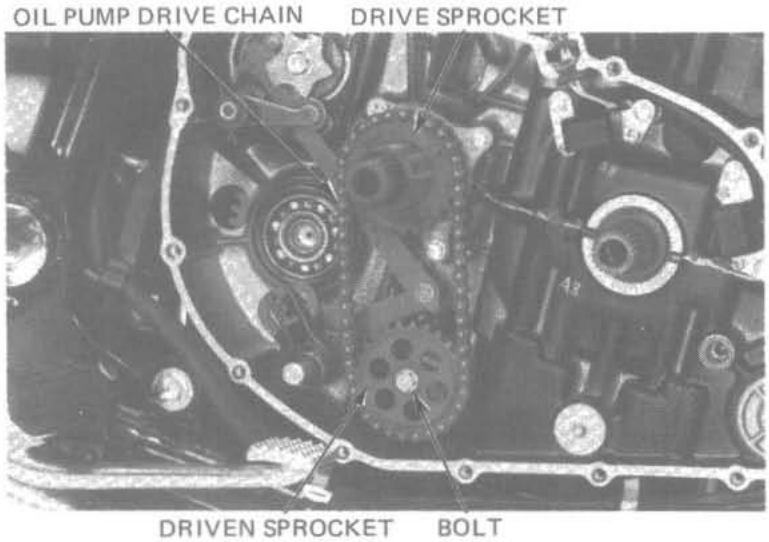

Align the punch marks on the gearshift pedal and gearshift spindle and install the gearshift pedal assembly.

Install the left crankcase rear cover and fill the crankcase with oil (page 2-3).

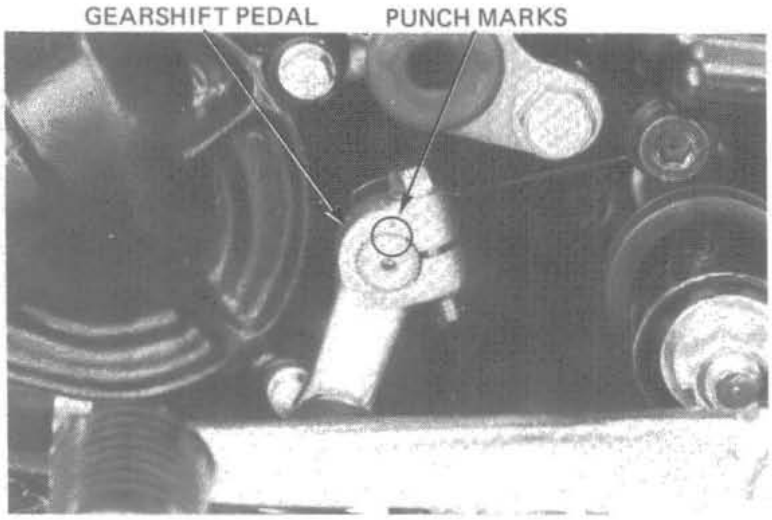

Date of Issue: January, 1982

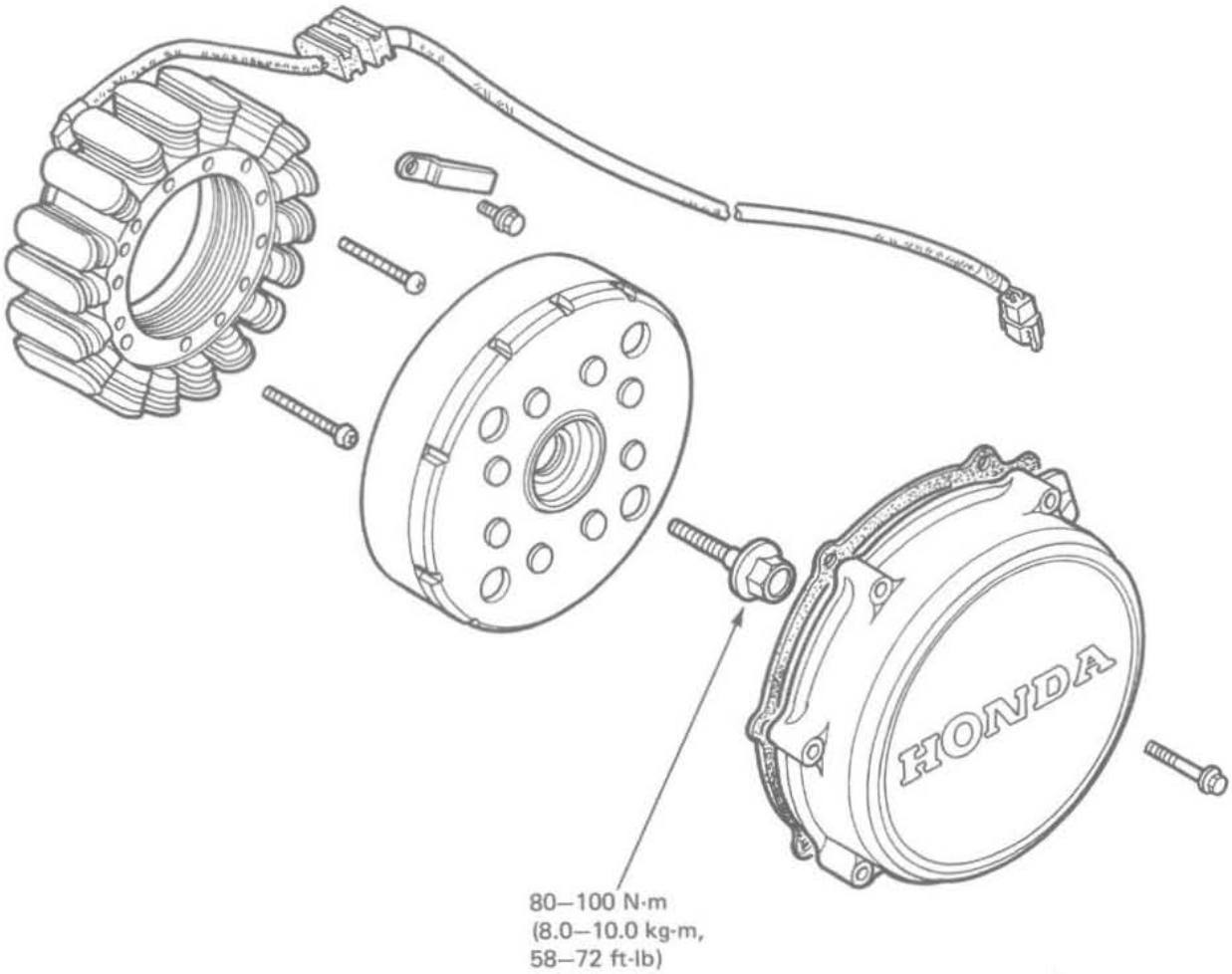

Date of Issue: January, 1982

9. ALTERNATOR

SERVICE INFORMATION

GENERAL

- This section covers removal and installation of the alternator.
- Refer to section 18 for troubleshooting and inspection of the alternator.

TORQUE VALUE

Alternator rotor/Flywheel bolt	80–100 N·m (8.0–10.0 kg·m, 58–72 ft·lb)

TOOLS

Common

Universal holder	07725–0030000
Rotor puller	07733–0020001 or 07933–3290001 (U.S.A. only)

FLYWHEEL REMOVAL

Place a container under the alternator cover to catch engine oil.

Remove the alternator cover.

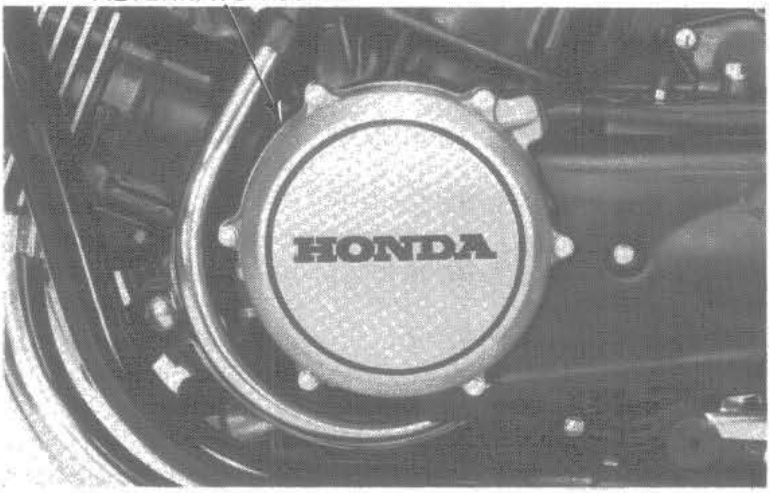

Hold the flywheel with a universal holder and remove the flywheel bolt.

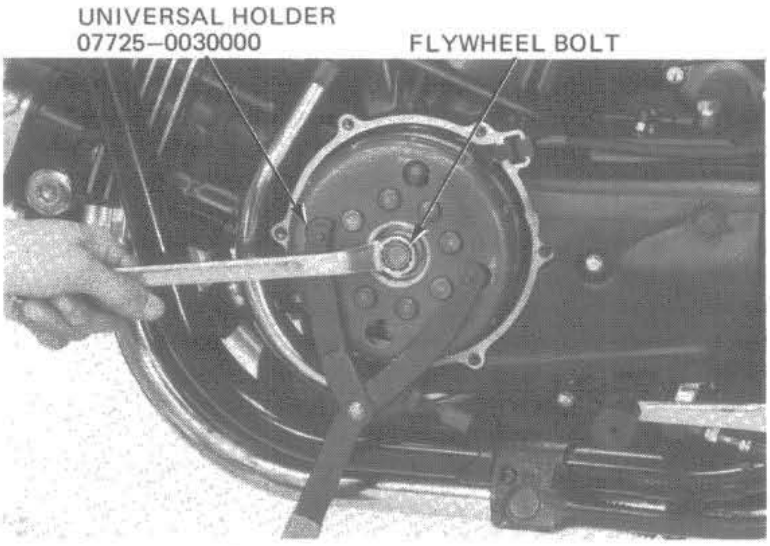

Remove the flywheel with the rotor remover.
Remove the woodruff key from the crankshaft.

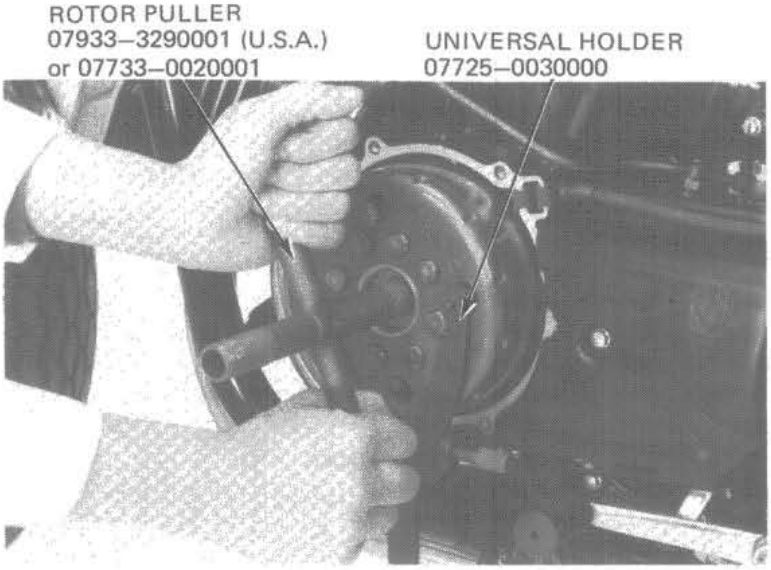

Date of Issue: May, 1982

STATOR REMOVAL

Remove the seat and frame left side cover.
Disconnect the alternator coupler and remove the wire bands.

Remove the stator by removing the bolts and wire clamp.

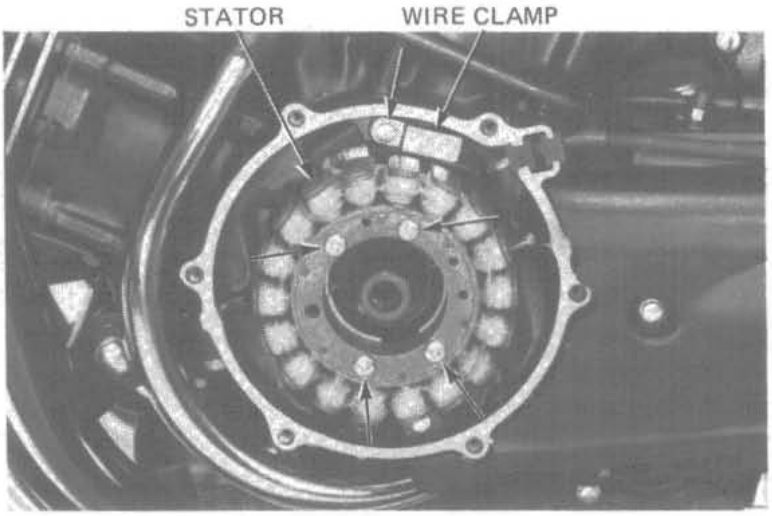

STATOR INSTALLATION

Install the stator and wire clamp.

Route the alternator leads properly and connect the alternator wire coupler to the wire harness.
Secure the alternator leads with the wire bands.
Install the seat and frame left side cover.

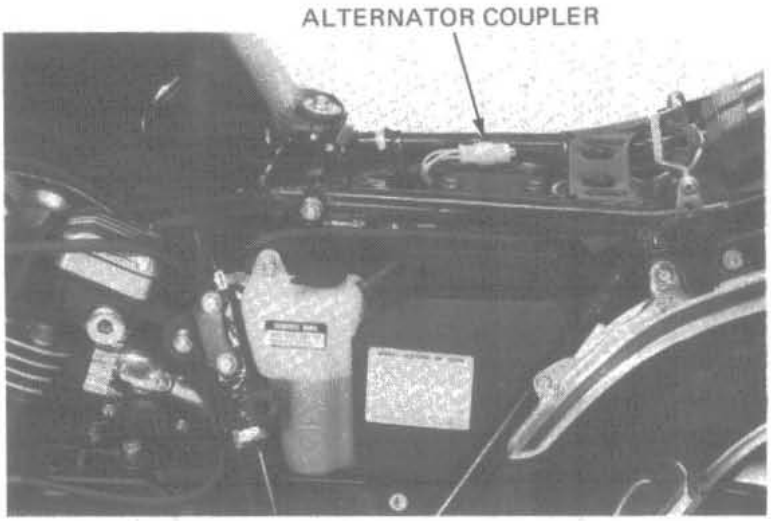

FLYWHEEL INSTALLATION

Install the woodruff key into the crankshaft.
Install the flywheel by aligning its keyway with the key in the crankshaft.
Hold the flywheel with a universal holder and torque the flywheel bolt.

TORQUE: 80–100 N·m (8.0–10.0 kg-m, 58–72 ft-lb)

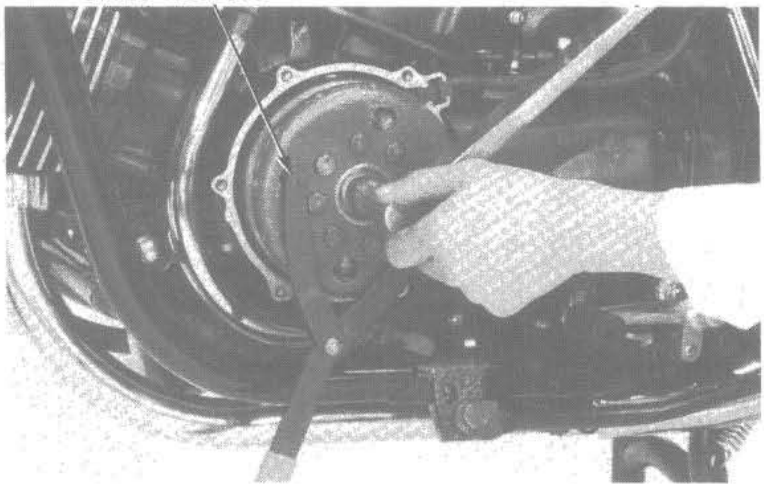

Install the alternator cover.
Check engine oil level and add if necessary (page 2-3).

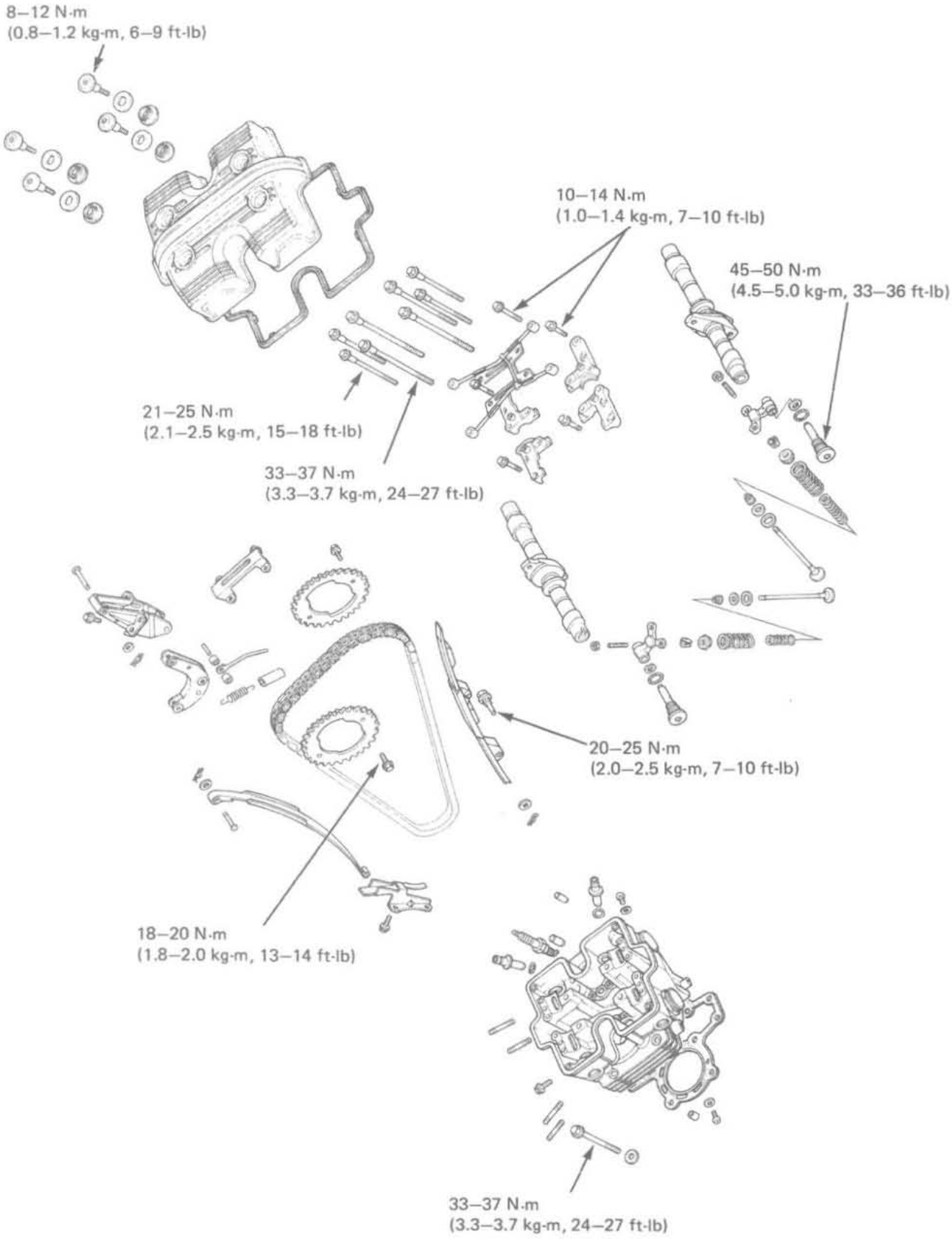

Date of Issue: May, 1982

10. CYLINDER HEAD/VALVE

SERVICE INFORMATION

GENERAL

- To remove the cylinder head, the following parts must be removed:
  - Exhaust pipes (Section 5).
  - Engine mounting bolt on rear cylinder head.
  - Carburetor (Section 4).
  - Radiator (Section 6).
- Camshaft lubricating oil is fed through an oil line. Be sure the hole in the oil line is not clogged.
- During assembly, apply molybdenum disulfide to the camshaft holder surfaces to provide initial lubrication.
- The cylinder numbering is given below:

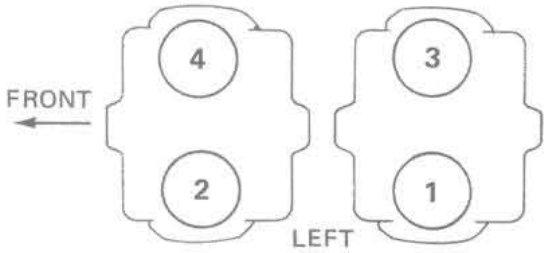

SPECIFICATIONS

			STANDARD		SERVICE LIMIT	
Compression pressure			13 ± 2 kg/cm² (184 ± 28 psi)		–	
Camshaft	Cam height	IN	35.335–35.495 mm	(1.3911–1.3974 in)	35.3 mm	(1.39 in)
		EX	35.335–35.495 mm	(1.3911–1.3974 in)	35.3 mm	(1.39 in)
	Runout		–		0.10 mm	(0.004 in)
	End clearance		0.05–0.25 mm	(0.002–0.010 in)	0.30 mm	(0.012 in)
	Oil clearance	Center	0.030–0.091 mm	(0.001–0.004 in)	0.10 mm	(0.004 in)
		Both ends	0.050–0.111 mm	(0.002–0.004 in)	0.12 mm	(0.005 in)
Rocker arm	Rocker arm I.D.		12.000–12.018 mm	(0.4724–0.4731 in)	12.05 mm	(0.474 in)
	Shoft O.D.		11.966–11.984 mm	(0.4711–0.4718 in)	11.93 mm	(0.470 in)
Valve	Valve stem O.D.	IN	5.475–5.490 mm	(0.2156–0.2161 in)	5.47 mm	(0.215 in)
		EX	5.455–5.470 mm	(0.2148–0.2154 in)	5.45 mm	(0.214 in)
	Valve guide I.D.		5.500–5.515 mm	(0.2165–0.2171 in)	5.55 mm	(0.219 in)
	Stem-to-guide clearance	IN	0.010–0.040 mm	(0.0004–0.0016 in)	0.08 mm	(0.003 in)
		EX	0.030–0.060 mm	(0.0012–0.0024 in)	0.10 mm	(0.004 in)
	Valve stem runout		–		0.05 mm	(0.002 in)
	Valve length	IN	89.55 mm	(3.526 in)	89.05 mm	(3.506 in)
		EX	89.35 mm	(3.518 in)	88.85 mm	(3.498 in)
	Valve seat width		0.99–1.27 mm	(0.039–0.050 in)	1.5 mm	(0.06 in)

Valve spring	Free length	Inner	40.7 mm (1.60 in)	39.35 mm (1.55 in)
		Outer	43.9 mm (1.73 in)	42.43 mm (1.67 in)
	Preload/length	Inner	6.39–7.81 kg/34.5 mm (14.10–17.22 lb/1.36 in)	6.08 kg/34.5 mm (13.41 lb/1.36 in)
		Outer	12.6–14.6 kg/37.5 mm (27.80–32.19 lb/1.48 in)	11.99 kg/37.5 mm (26.43 lb/1.48 in)
Cylinder head	Warpage		–	0.25 mm (0.010 in)

TORQUE VALUES

Cylinder head cover	8–12 N·m (0.8–1.2 kg-m, 6–9 ft-lb)
Camshaft holder 6 mm	10–14 N·m (1.0–1.4 kg-m, 7–10 ft-lb)
Cam chain guide A	20–25 N·m (2.0–2.5 kg-m, 14–18 ft-lb) - Apply LOCKTITE® to the threads.
Cylinder head 9 mm	33–37 N·m (3.3–3.7 kg-m, 24–27 ft-lb)
Cylinder head 8 mm	21–25 N·m (2.1–2.5 kg-m, 15–18 ft-lb)
Rocker arm shaft	45–50 N·m (4.5–5.0 kg-m, 33–36 ft-lb)
Cam sprocket	18–20 N·m (1.8–2.0 kg-m, 13–14 ft-lb)

TOOLS

Special

Valve gudie reamer, 5.5 mm	07984–2000000
Valve guide driver	07942–3290200 or 07742–0020200

Common

Valve spring compressor	07757–0010000
Valve guide remover 5.5 mm	07742–0010100

TROUBLESHOOTING

Engine top-end problems usually affect engine performance. These can be diagnosed by a compression test, or by tracing noises to the top-end with a sounding rod or stethoscope.

Low compression

1. Valves
   - Incorrect valve adjustment
   - Burned or bent valves
   - Incorrect valve timing
   - Broken valve spring
2. Cylinder head
   - Leaking or damaged head gasket
   - Warped or cracked cylinder head
3. Cylinder and piston (Refer to Section 12)

Compression too high

1. Excessive carbon build-up on piston or combustion chamber

Excessive noise

1. Incorrect valve adjustment
2. Sticking valve or broken valve spring
3. Damaged or worn camshaft
4. Loose or worn cam chain
5. Worn or damaged cam chain tensioner
6. Worn cam sprocket teeth
7. Worn rocker arm and/or shaft

Date of Issue: October, 1982

CAMSHAFT REMOVAL

Drain the coolant (page 6-3) and engine oil from the front cylinder head by removing the bolts and washers.

Remove the radiator (page 6-8).

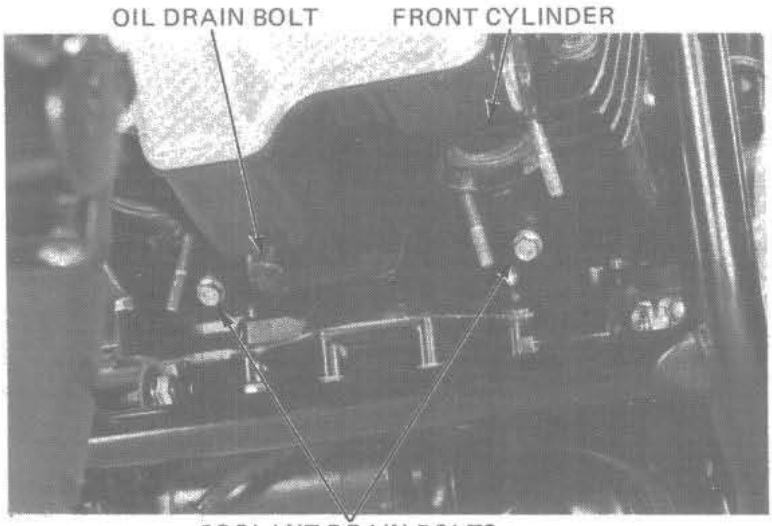

Remove the cylinder head cover from the front cylinder head.
Remove the cylinder head cover and cover base from the rear cylinder head.

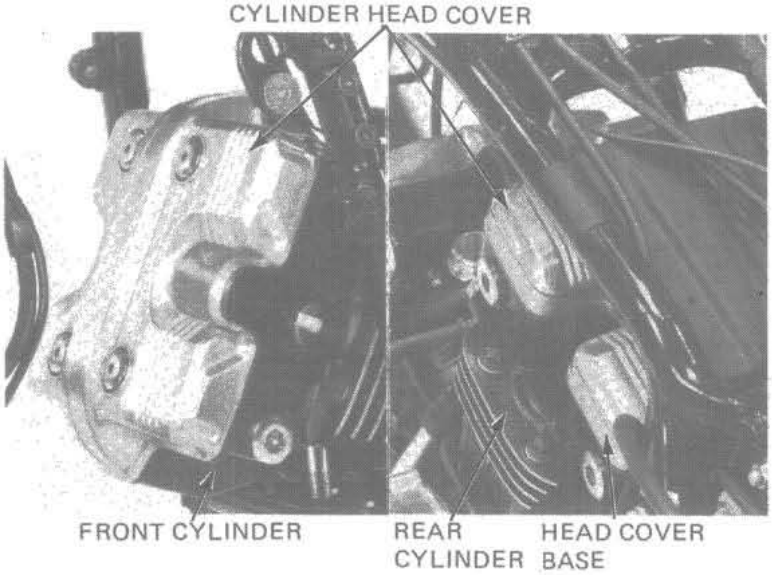

Remove the oil pipe and cam chain guide mounting bolts and remove the cam chain guide.
Remove the alternator cover and rotate the crankshaft clockwise until the cam chain has free play.

Remove the oil pipe with pulling up the middle of chain.

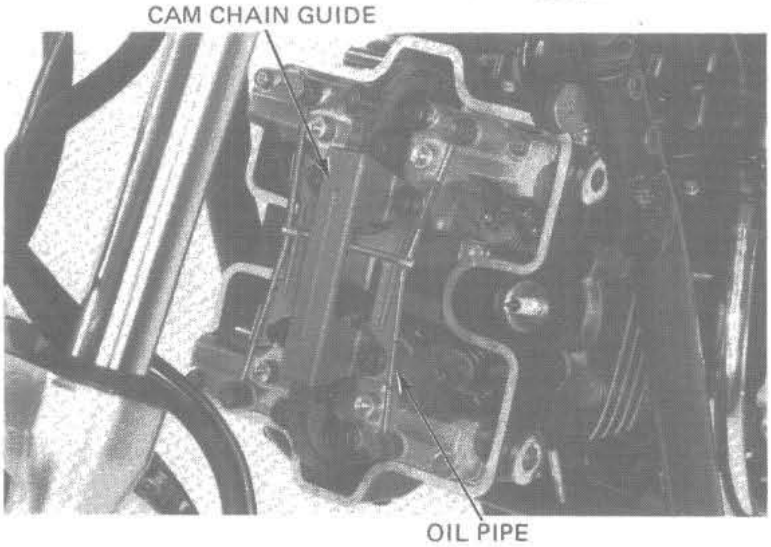

Turn the crankshaft clockwise until the T1.3 mark aligns with the rear crankcase mating surfaces.

Place rags or shop towels in the rear cylinder head to prevent parts from being dropped into the crankcase.

Remove the rear cylinder intake and exhaust cam sprocket bolts.

Turn the crankshaft clockwise one turn (360°) and remove the other rear cylinder cam sprocket bolts.

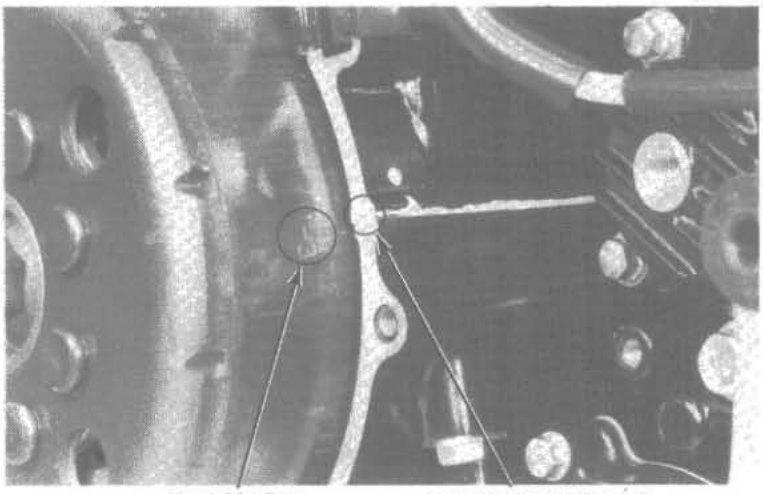

Turn the crankshaft clockwise until the T2.4 mark aligns with the rear crankcase mating surface.
Clean the camshaft sprockets with contact cleaner.
Index the front cylinder camshaft sprockets with the top of the cylinder head. Use a water proof marker.
Remove the front cylinder intake and exhaust cam sprocket bolts.

Turn the crankshaft clockwise one turn (360°) and remove the other cam sprocket bolts.

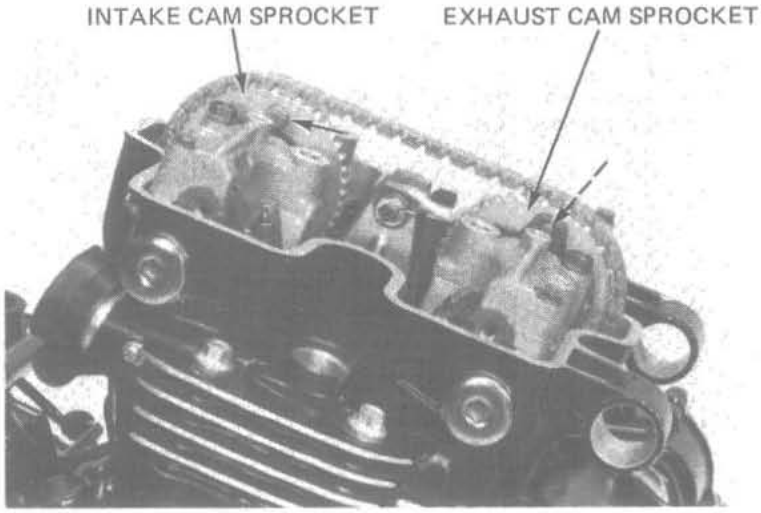

Slide the cam sprockets with the cam chains off the camshaft sprocket flange.

Remove the cam chain from the sprockets and remove the camshaft holders.

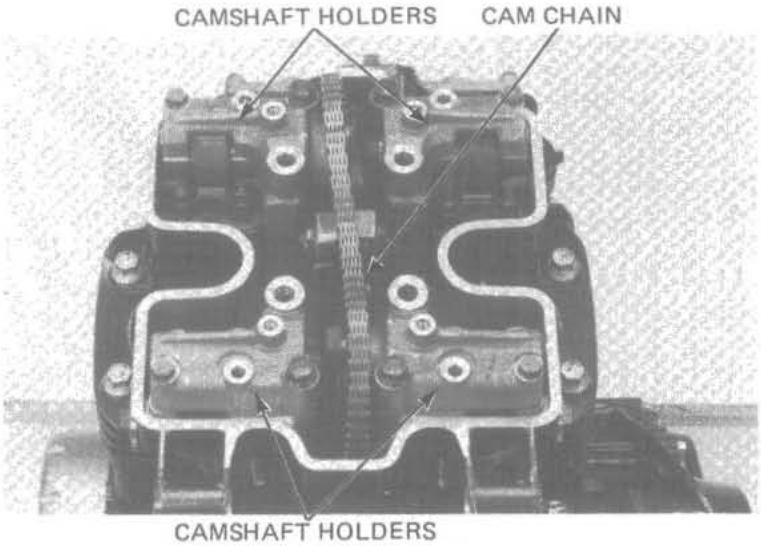

Remove the camshaft holder dowel pins and the intake and exhaust camshaft.

Remove the cam sprockets from the camshafts. Note the side each camshaft sprocket flange is facing for reassembly purpose.

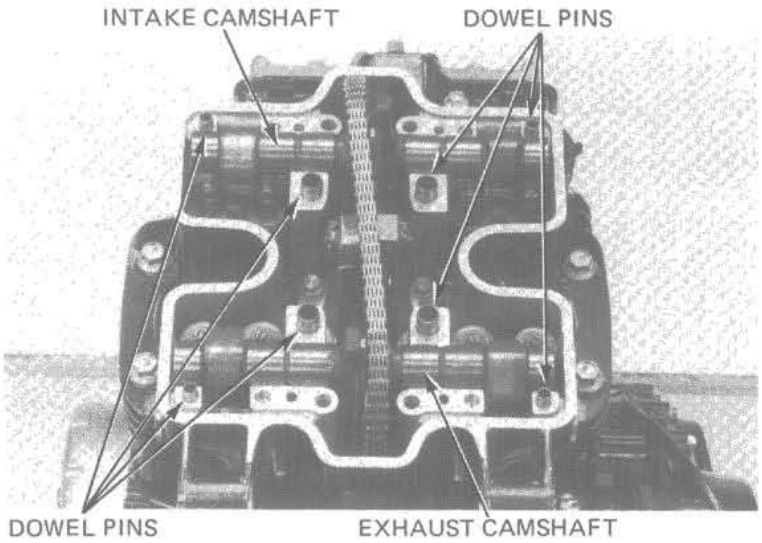

CAMSHAFT/CAM HOLDER INSPECTION

Inspect the camshaft and holder journal surfaces for scoring scratches, or evidence of insufficient lubrication.

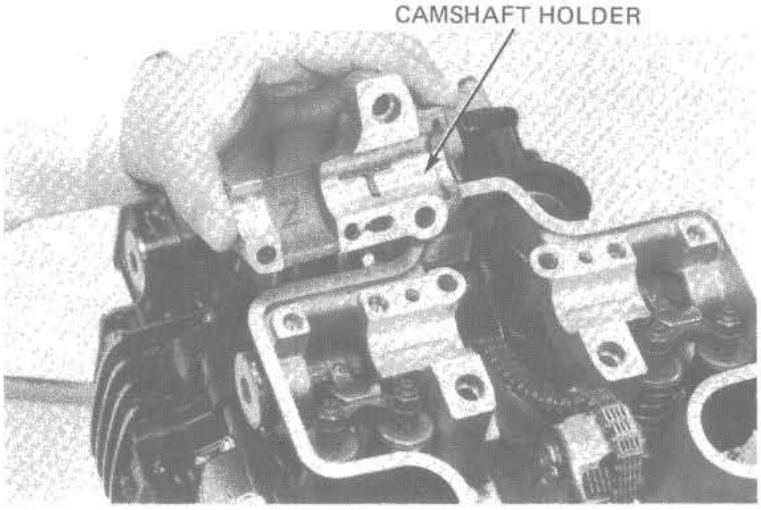

CAMSHAFT RUNOUT

Check camshaft runout with a dial indicator. Support both ends of the camshaft with V-blocks. Use 1/2 of the total indicator reading to determine runout.

SERVICE LIMIT: 0.10 mm (0.004 in)

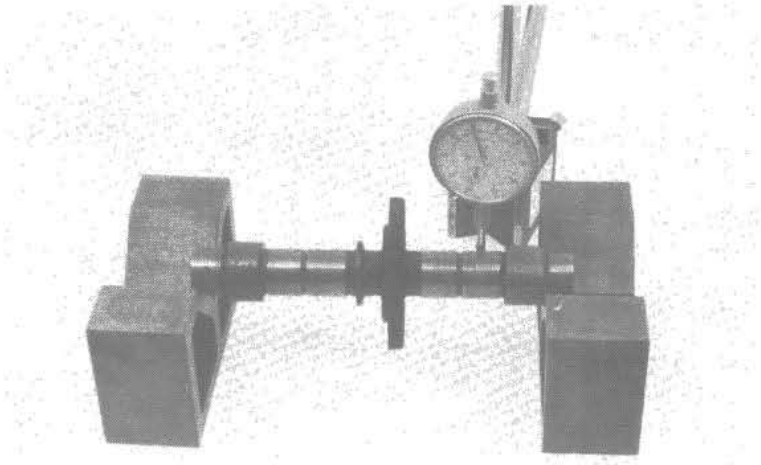

CAM INSPECTION

Using a micrometer, measure each cam lobe.

SERVICE LIMITS: IN, EX: 35.3 mm (1.39 in)

Check for wear or damage.

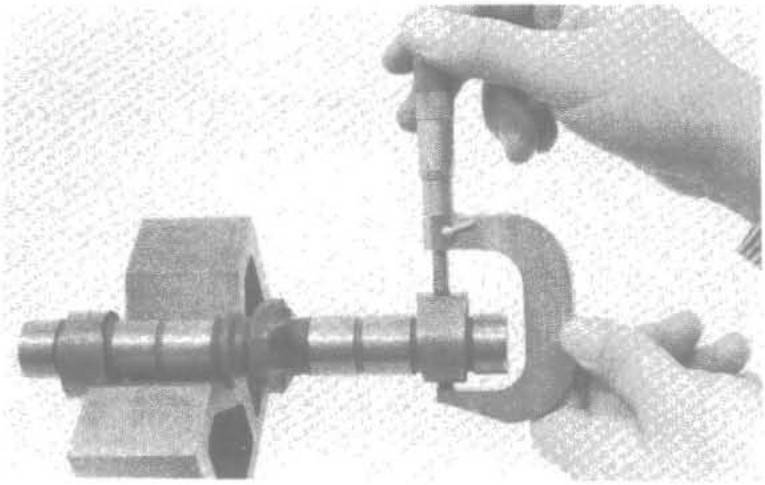

Wipe any oil from the journals.
Lay a strip of plastigauge lengthwise on top of each camshaft journal.

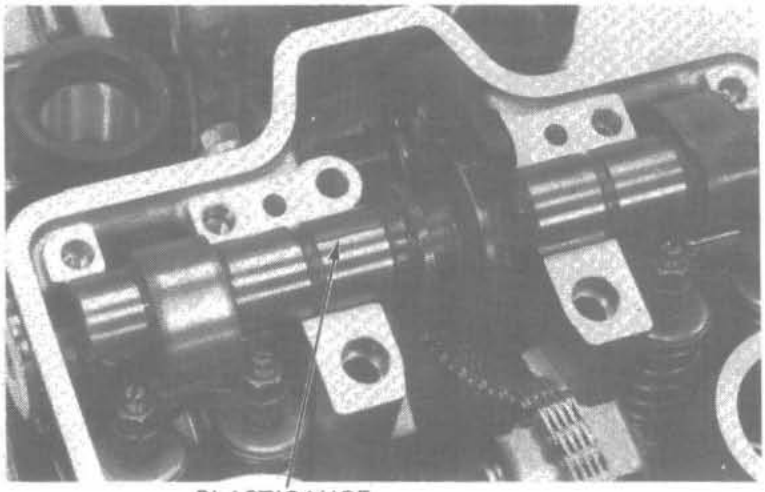

Install the camshaft holders and tighten in a crisscross pattern.

NOTE:

Do not rotate the camshaft when using plastigauge.

TORQUE:

A:	6 mm BOLT:	10–14 N·m (1.0–1.4 kg-m, 7–10 ft-lb)
B:	8 mm BOLT:	21–25 N·m (2.1–2.5 kg-m, 15–18 ft-lb)
C:	9 mm BOLT:	33–37 N·m (3.3–3.7 kg-m, 24–27 ft-lb)

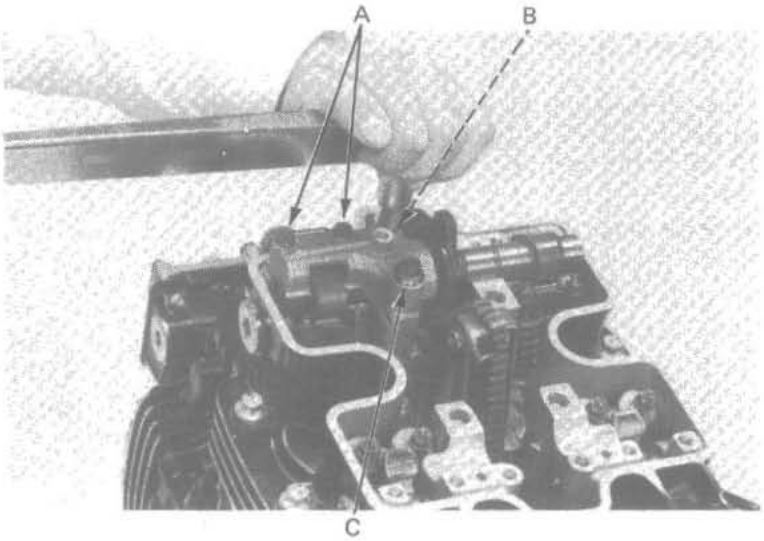

Date of Issue: May, 1982

Remove the camshaft holders and measure the width of each plastigauge. The widest thickness determines the oil clearance.

SERVICE LIMIT:
CENTER: 0.10 mm (0.004 in)
BOTH ENDS: 0.12 mm (0.005 in)

When the service limits are exceeded, replace the camshaft and recheck the oil clearance.
Replace the cylinder head and camshaft holders if the clearance still exceeds service limits.

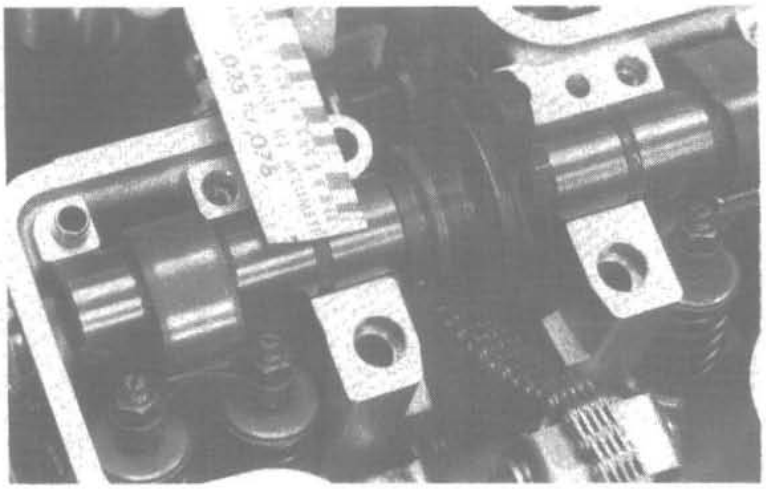

CYLINDER HEAD REMOVAL

Loosen the water hose clamp.
Remove the water pipes and hose.
Remove the water pipe O-rings.

Remove the oil pipe.

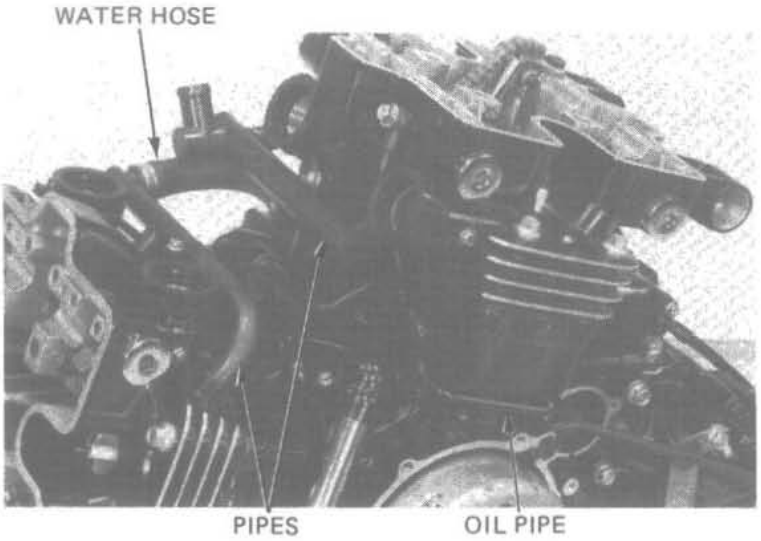

Remove the front and rear cam chain tensioner base mounting bolts.

Pull the cam chain tensioner base up.

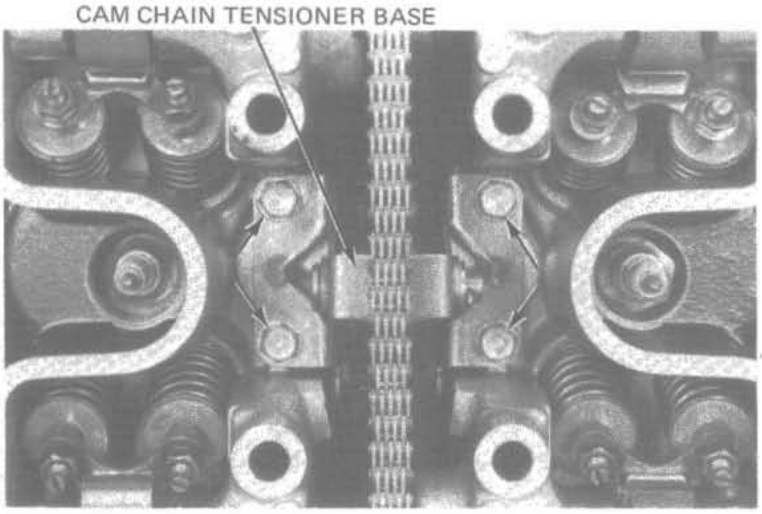

Remove the slipper clip and pin and remove the tensioner slipper base.

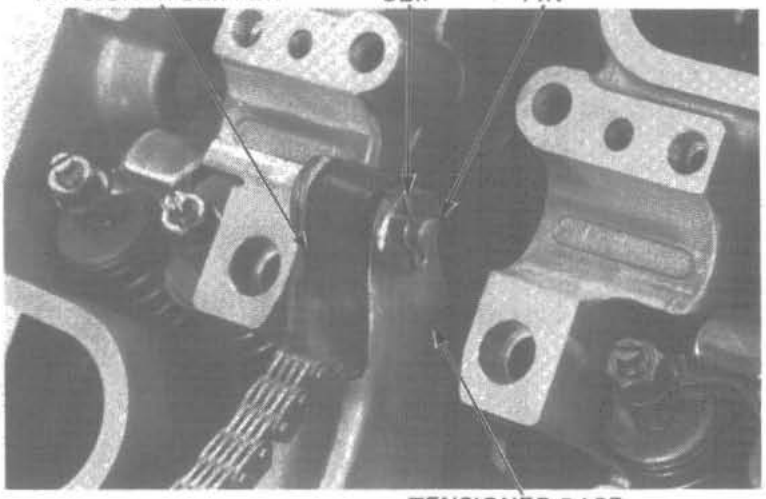

Remove the cylinder head bolts

Remove the cylinder heads using a screw driver at the pry points.

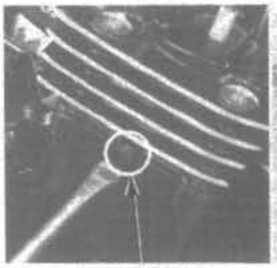

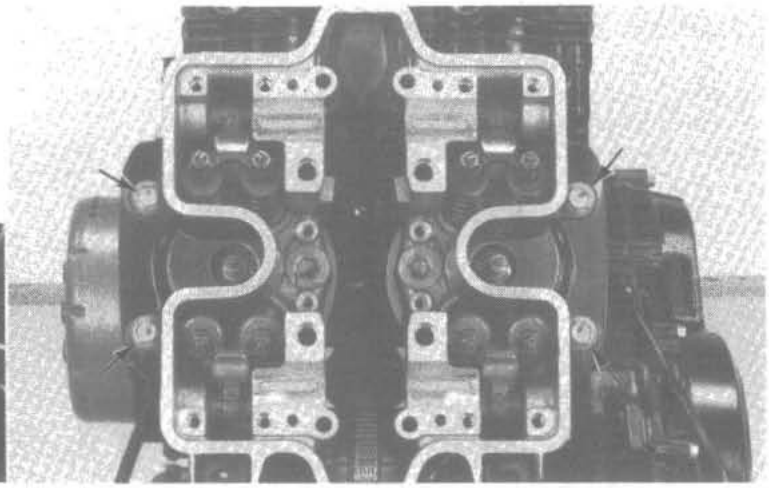

Remove the front and rear cylinder head gaskets and dowel pins.

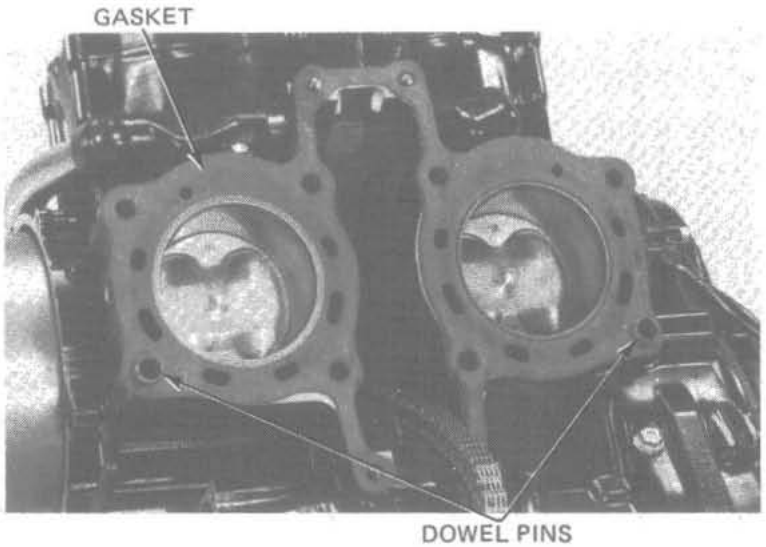

Remove the front cylinder cam chain guide by removing the clip and washer.

NOTE:

> Do not drop the clip and washer into the crankcase.

Remove the rear cylinder cam chain guide bolts and guide.

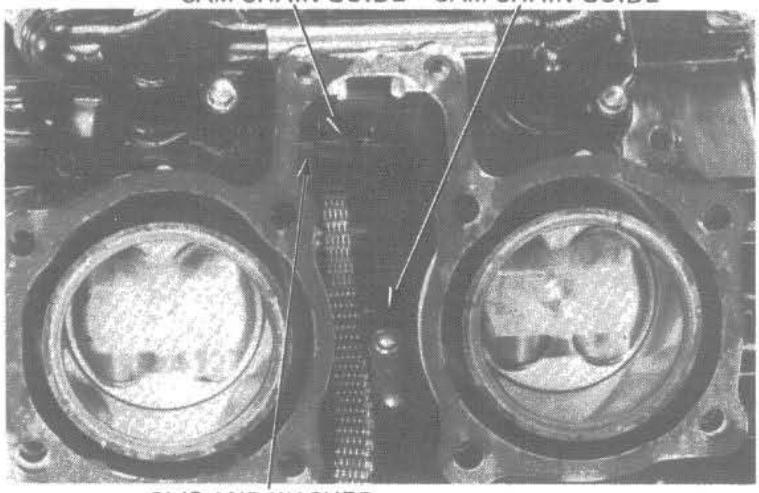

CAM CHAIN GUIDE AND CAM CHAIN TENSIONER INSPECTION

Inspect the cam chain guide and tensioner for damage or excessive wear.

Inspect the cam chain tensioner slipper for damage or excessive wear.
Inspect the spring for good tension, replace if necessary.

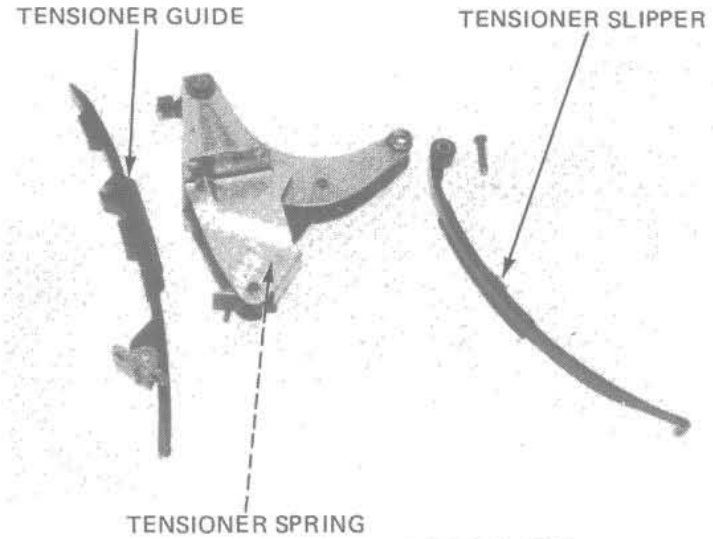

CYLINDER HEAD DISASSEMBLY

Remove the rocker arm shaft and rocker arms.

Remove the rocker arm spring and O-ring from the shaft bolt.

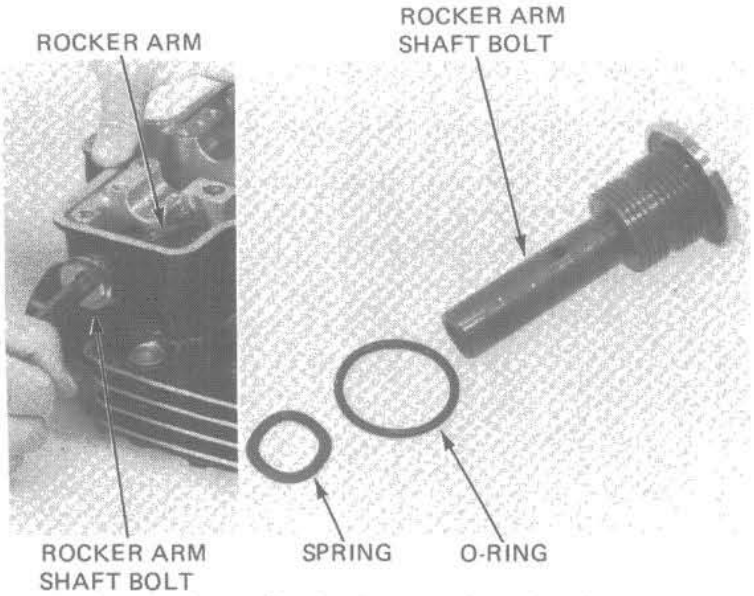

Remove the valve spring cotters, retainers, springs and valves.

CAUTION:

- *To prevent loss of tension, do not compress the valve springs more than necessary to remove the cotters.*
- *Thread the large retainer on the compressor attachment, so the compressor will not touch the cylinder head.*

NOTE:

Mark all disassembled parts to ensure correct reassembly.

Remove the valve stem seals.

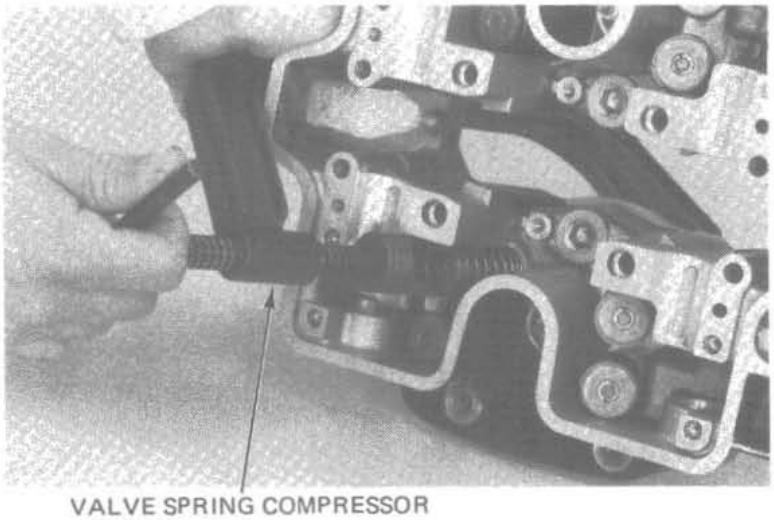

VALVE SPRING COMPRESSOR
07757–0010000

Remove carbon deposits from the combustion chamber and clean off the head gasket surfaces.

NOTE:

- Avoid damaging the gasket surfaces.
- Gaskets will come off easier if soaked in solvent.

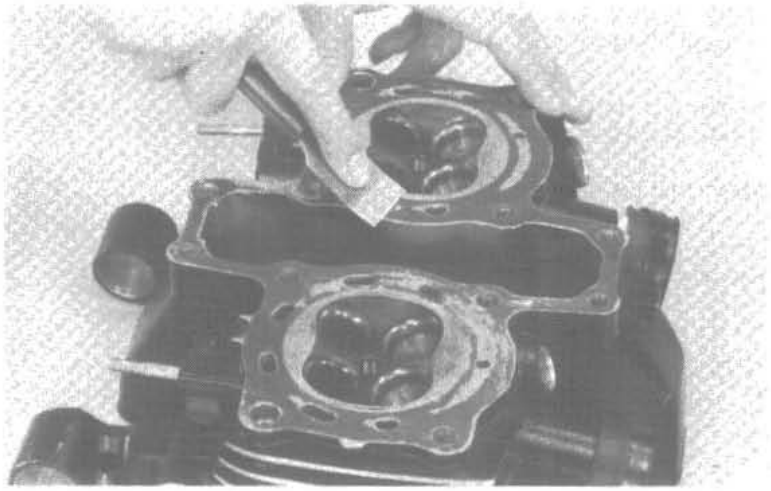

CYLINDER HEAD INSPECTION

Check the spark plug hole and valve areas for cracks.
Check the cylinder head for warpage with a straight edge and feeler gauge.

SERVICE LIMIT: 0.25 mm (0.010 in)

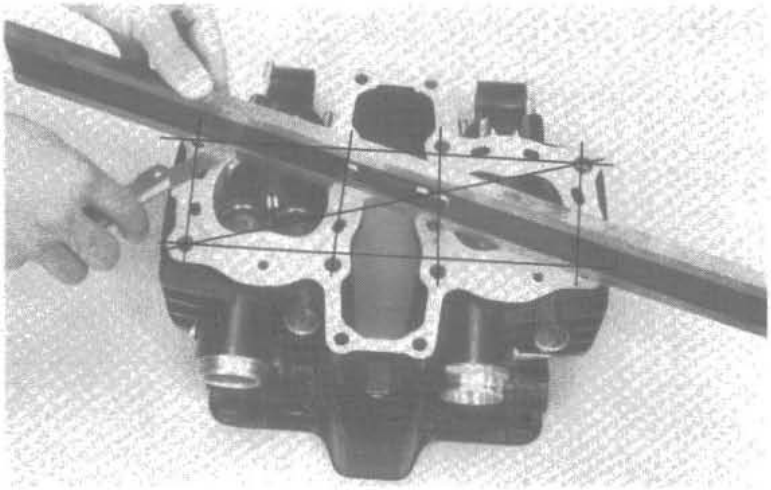

Date of Issue: May, 1982

ROCKER ARM INSPECTION

Inspect the rocker arms for wear or damage to the camshaft contact surface or for a clogged oil hole.

Measure the I.D. of each rocker arm.

SERVICE LIMIT: 12.05 mm (0.474 in)

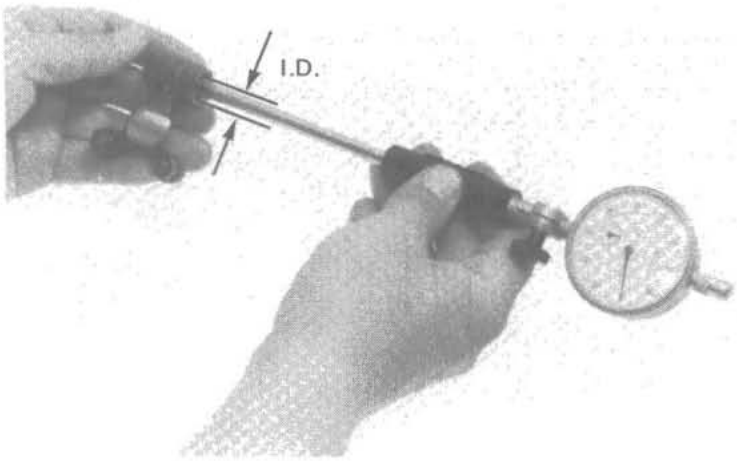

ROCKER ARM SHAFT AND SPRING INSPECTION

Measure each rocker arm shaft O.D.

SERVICE LIMIT: 11.93 mm (0.470 in)

Inspect the shaft for wear or damage and calculate the shaft to rocker arm clearance.

SERVICE LIMIT: 0.12 mm (0.005 in)

Inspect the rocker arm shaft spring for wear or damage.

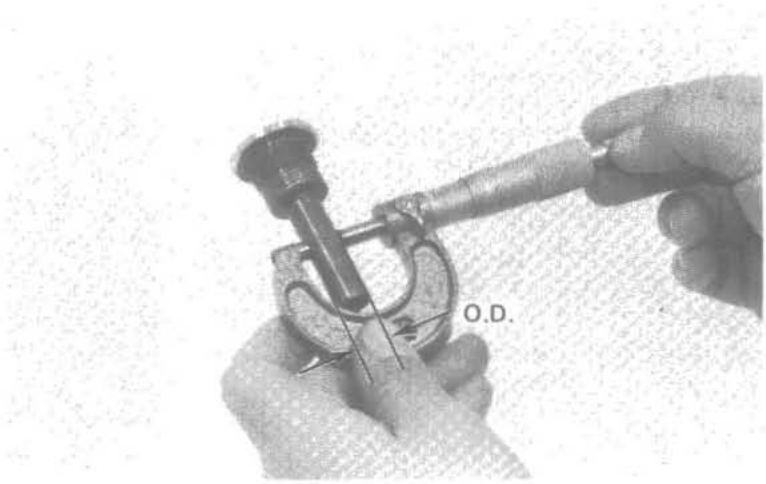

Measure the free length of the inner and outer valve springs.

SERVICE LIMIT:
INNER (IN, EX): 39.35 mm (1.55 in)
OUTER (IN, EX): 42.43 mm (1.67 in)

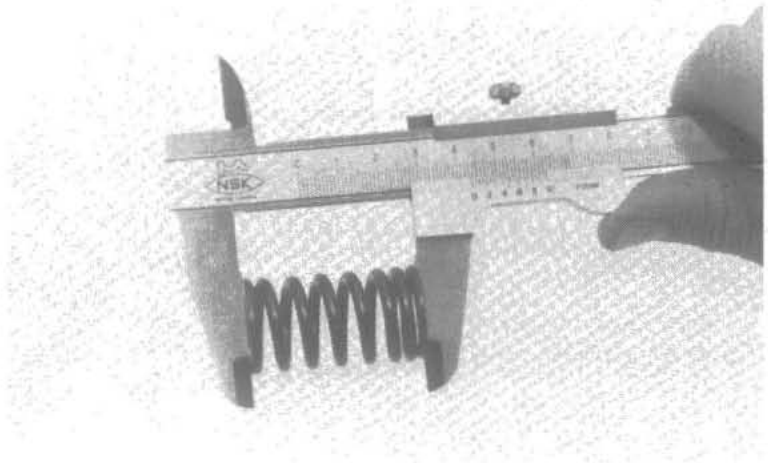

VALVE STEM-TO-GUIDE CLEARANCE

Inspect each valve for bending, burning, scratches or abnormal stem wear.
Check valve movement in the guide and measure and record each valve stem O.D.

SERVICE LIMITS: IN: 5.47 mm (0.215 in)
EX: 5.45 mm (0.214 in)

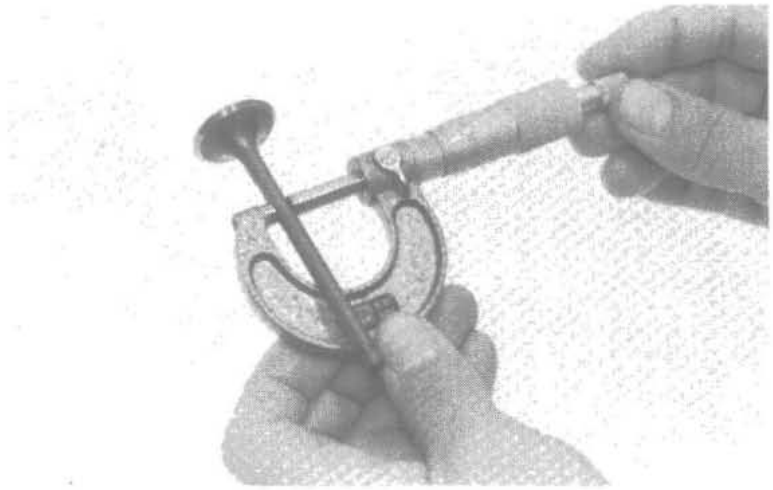

NOTE:

> Ream the guides to remove any carbon build-up before checking clearances.

Measure and record each valve guide I.D. using a ball gauge or inside micrometer.

SERVICE LIMIT: 5.55 mm (0.219 in)

Subtract each valve stem O.D. from the corresponding guide I.D. to obtain the stem to guide clearance.

SERVICE LIMIT: IN: 0.08 mm (0.003 in)
EX: 0.10 mm (0.004 in)

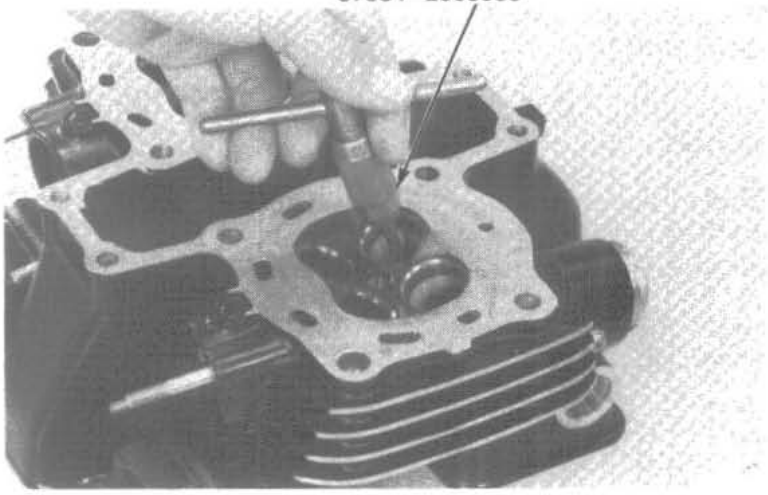

NOTE:

> If the stem-to-guide clearance exceeds the service limits, determine if a new guide with standard dimensions would bring the clearance within tolerance. If so, replace any guides as necessary and ream to fit.

If the stem-to-guide clearance exceeds the service limits with new guides, also replace the valves.

NOTE:

> Reface the valve seats whenever the valve guides are replaced (page 10-13).

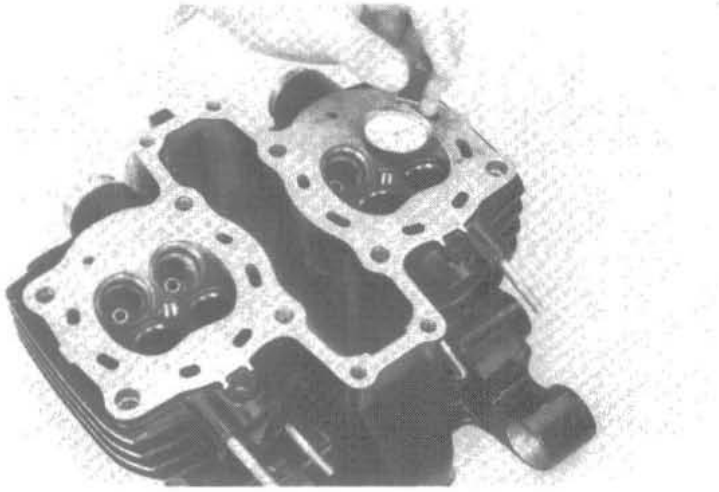

Date of Issue: May, 1982

VALVE GUIDE REPLACEMENT

Heat the cylinder head to 100°C (212°F) with a hot plate or oven.

CAUTION:

- *Do not use a torch to heat the cylinder; it may cause warping.*
- *To avoid burns, wear heavy gloves when handling the heated cylinder head.*

Support the cylinder head and drive out the old guides from the combustion chamber side of the cylinder head.

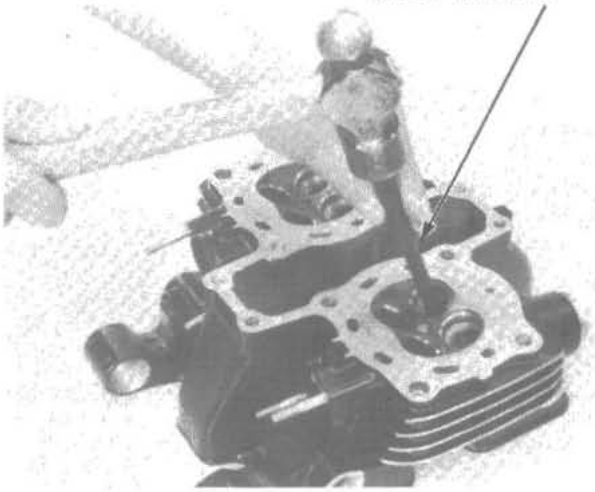

Drive new guides in from the rocker arm side of the cylinder head.

NOTE:

Cylinder head heat should still be at 100°C (212°F) for installation of the new guides.

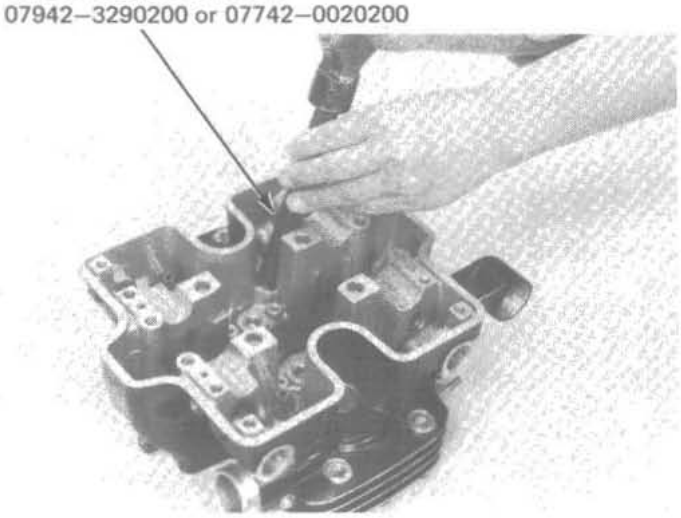

Let the cylinder head cool to room temperature and ream the new valve guides.

NOTE:

- Use cutting oil on the reamer during this operation.
- Rotate the reamer when inserting and removing it.

Reface the valve seat (page 10-14) and clean the cylinder head thoroughly to remove any metal particles.

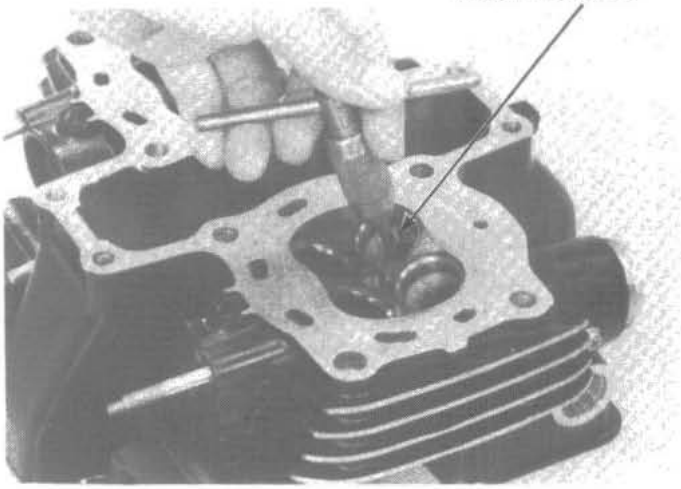

VALVE SEAT INSPECTION / REFACING

Clean all intake and exhaust valves thoroughly to remove carbon deposits.
Apply a light coating of valve lapping compound to each valve face. Lap each valve and seat using a rubber hose or other hand-lapping tool.

NOTE:

> Take care not to allow the compound to enter between the valve stem and guide. After lapping, wash out the compound completely and apply a coat of engine oil to the valve face and seat.

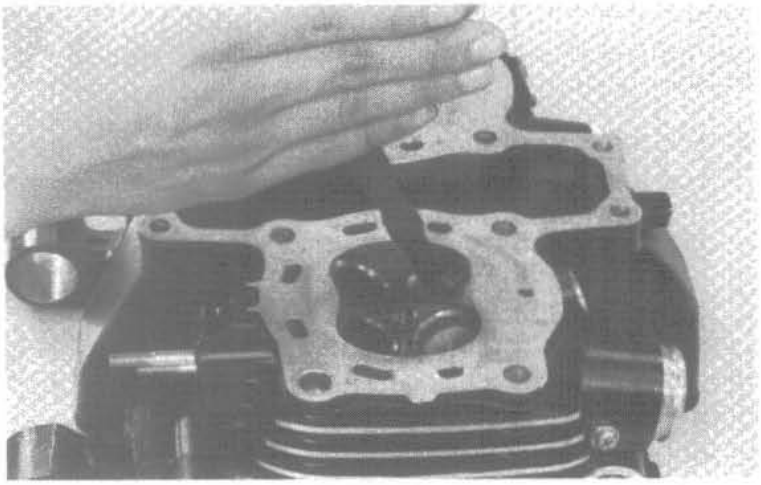

Remove the valve and inspect the face.

CAUTION:

> *The valves cannot be ground. If the valve face is rough, worn unevenly, or contacts the seat improperly, the valve must be replaced.*

Inspect the valve seat.

If the seat is too wide, too narrow, or has low spots, the seat must be ground.

NOTE:

> Follow the refacer manufacturer's operating instructions.

After cutting the seat, apply lapping compound to the valve face, and lap the valve using light pressure.
After lapping, wash any residual compound off the cylinder head and valve.

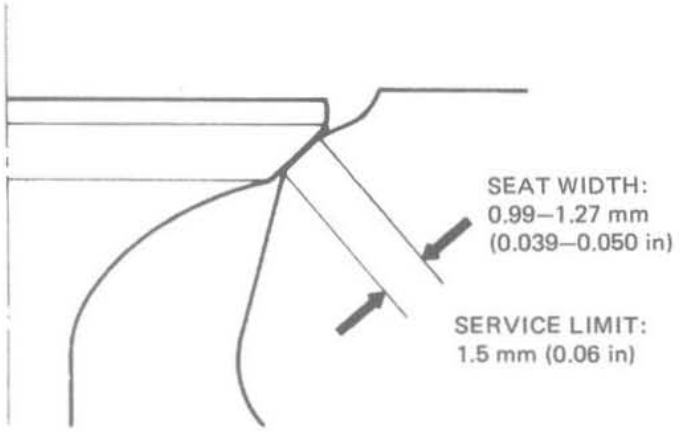

IN: CUTTER (30ϕ)
EX: CUTTER (25ϕ)

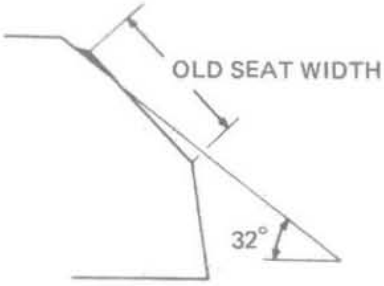

IN, EX: CUTTER (30ϕ)

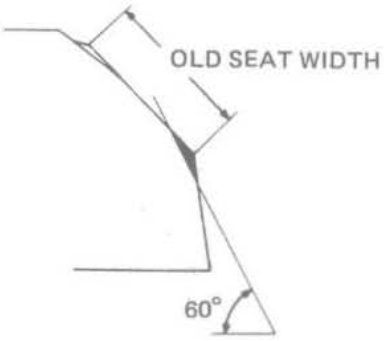

IN: CUTTER (29ϕ)
EX: CUTTER (24.5ϕ)

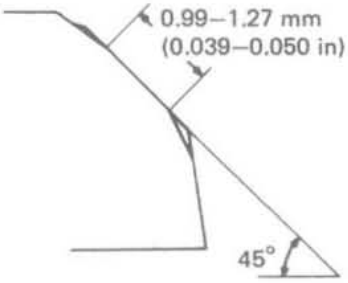

Date of Issue: May, 1982

CYLINDER HEAD ASSEMBLY

NOTE:

> Install new valve stem seals when assembling. Use valve guide driver 07742–0010100.

Lubricate each valve stem with molybdenum disulfide grease and insert the valve into the valve guide. To avoid damage to the stem seal, turn the valve slowly when inserting.

Install the valve springs and retainers. The springs tightly wound coils should face in.

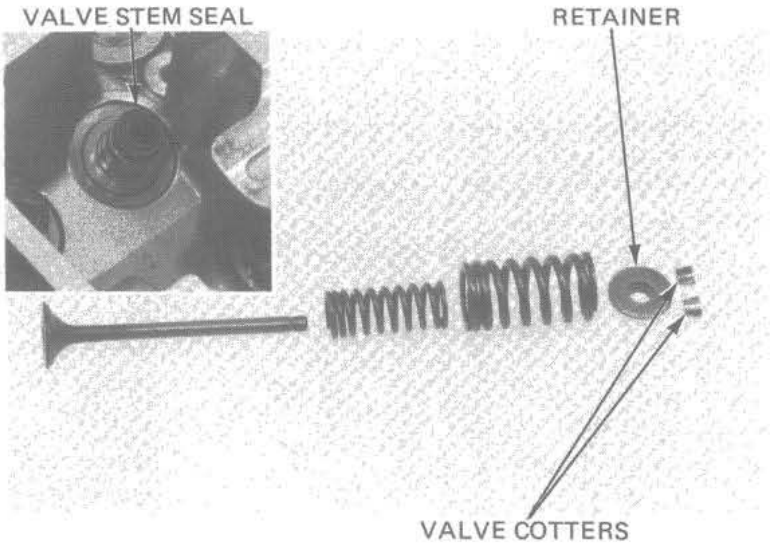

Install the valve cotters.

CAUTION:

> - *To prevent loss of tension, do not compress the valve spring more than necessary to install the valve keepers.*
> - *Thread the large retainer on the compressor attachment, so the compressor will not touch the cylinder head.*

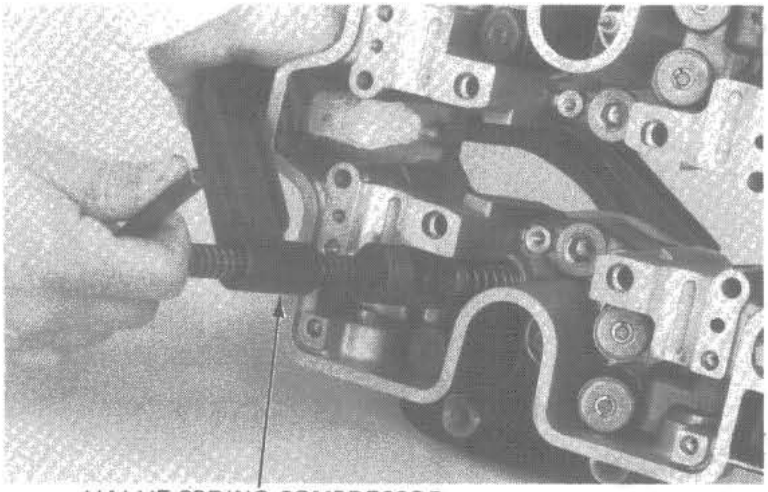

Tap the valve stems gently with a soft hammer to firmly seat the cotters.

NOTE:

> Support the cylinder head above the work bench surface to prevent possible valve damage.

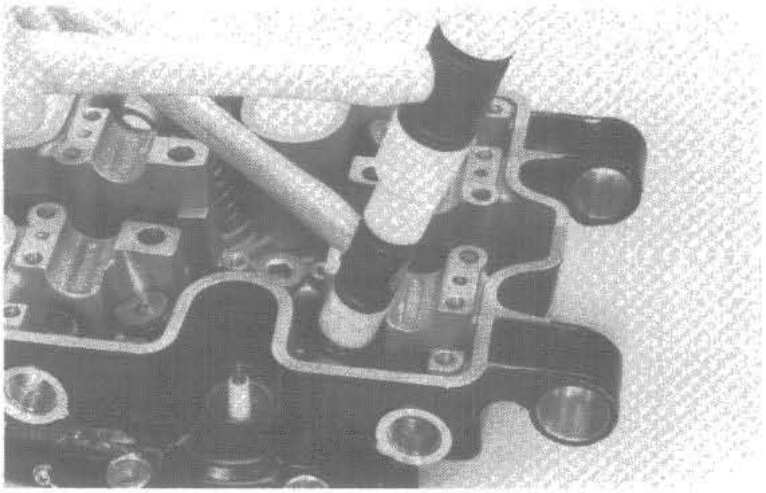

Install the O-ring and spring onto the rocker arm shaft.

Apply engine oil to the rocker arm shaft and install the rocker arm.
Install and tighten the rocker arm shaft bolt.

TORQUE: 45–50 N·m (4.5–5.0 kg-m, 33–36 ft-lb)

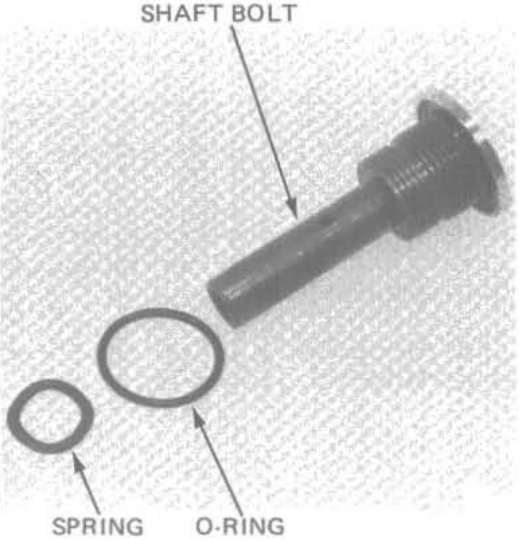

CYLINDER HEAD INSTALLATION

Clean the cylinder head surface of any gasket material.
Install the dowel pins and new head gaskets.

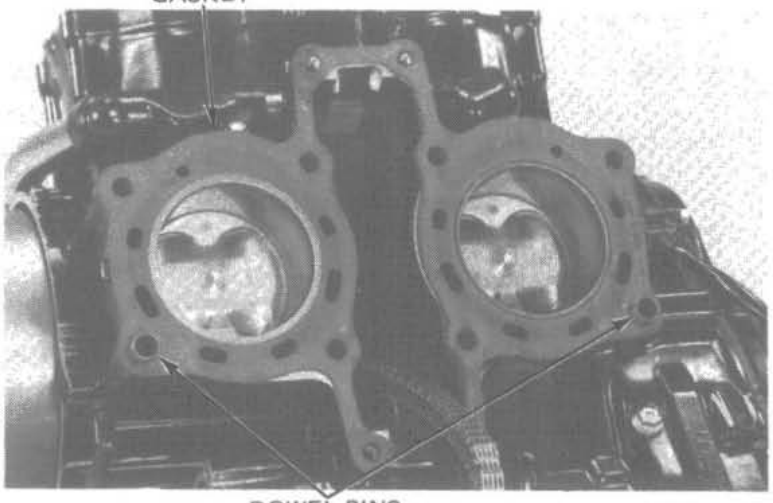

Install the front cylinder cam chain guide with the washer and clip.

NOTE:

> Be careful not to drop the washer or clip into the crankcase.

Install the rear cylinder cam chain guide.

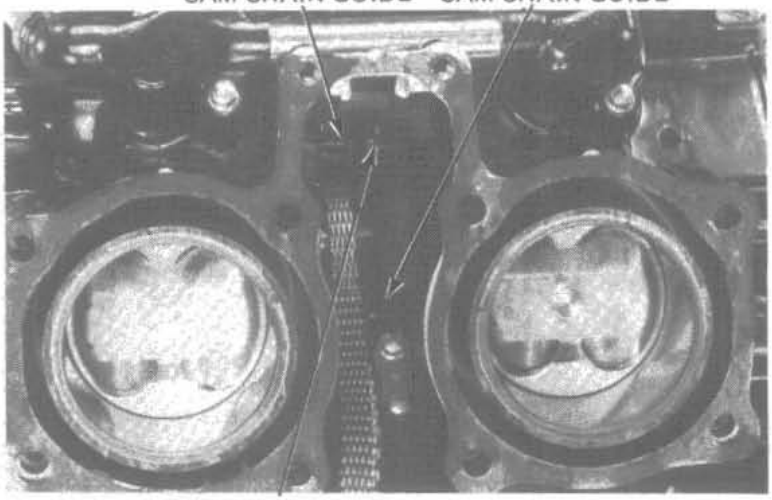

Date of Issue: May, 1982

With the cam chain tensioner raised in the direction of the arrow, insert a pin or piece of wire through the hole in the tensioner base and tensioner.

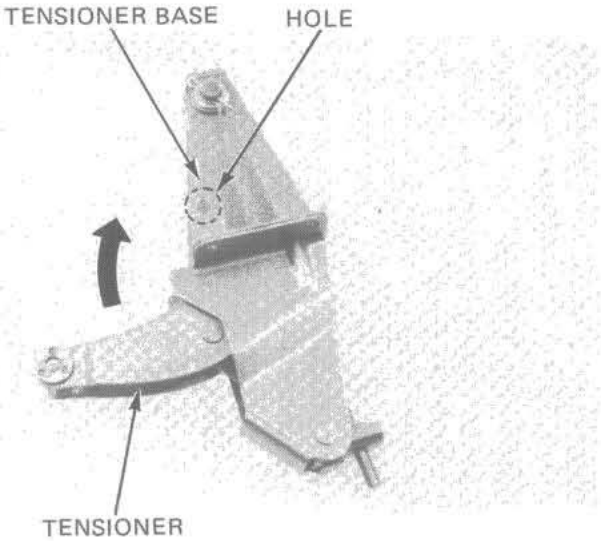

Place the cylinder head on the cylinder.
Pass the cam chain through the cam chain tensioner and install the tensioner slipper as shown.

NOTE:

> Check that the lower end of the slipper fits in the slipper base correctly.

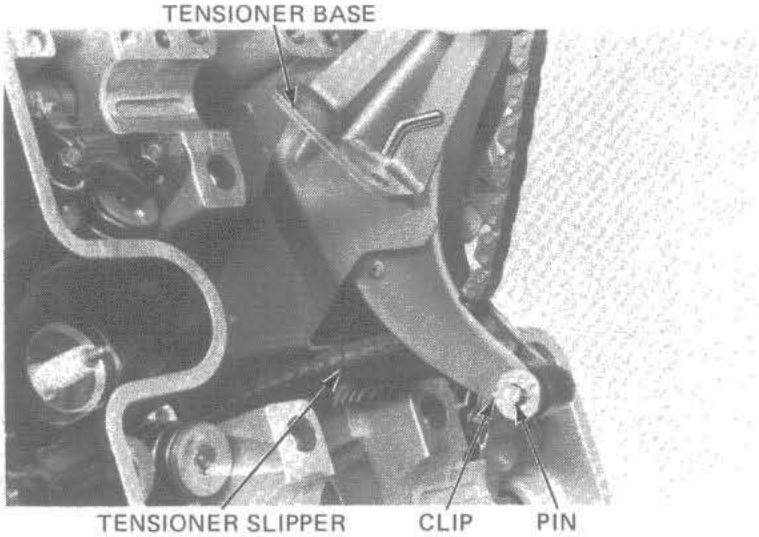

Tighten the cylinder head bolts.

NOTE:

> Tighten the bolts in 2–3 steps in a crisscross pattern.

TORQUE: 33–37 N·m (3.3–3.7 kg-m, 24–27 ft-lb)

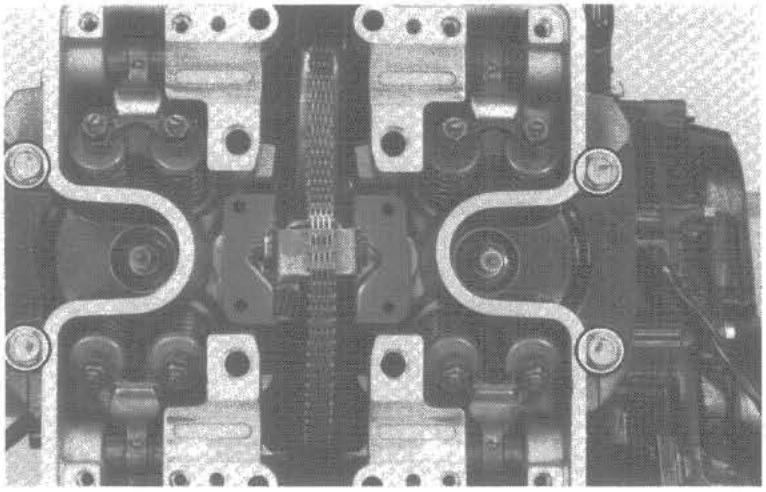

Install the exterior oil pipe with washers onto the cylinder and cylinder head.

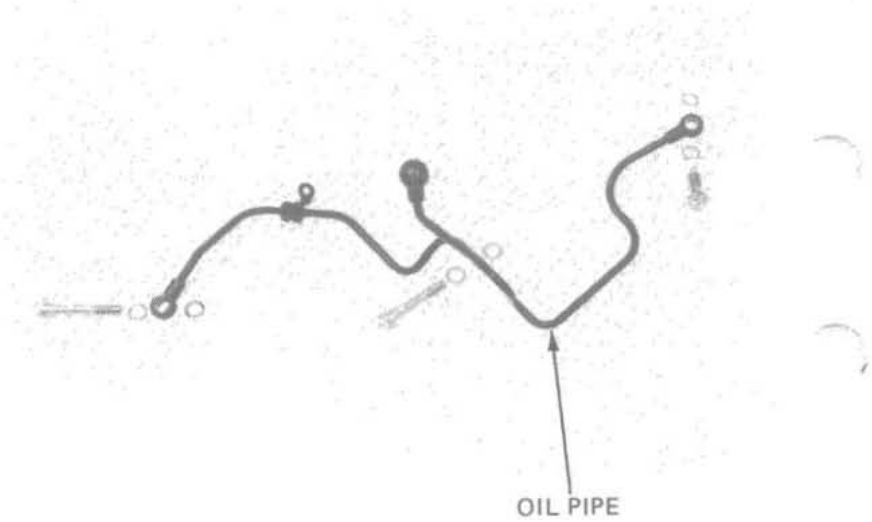

Install the water pipes and hose and tighten the hose bands securely.

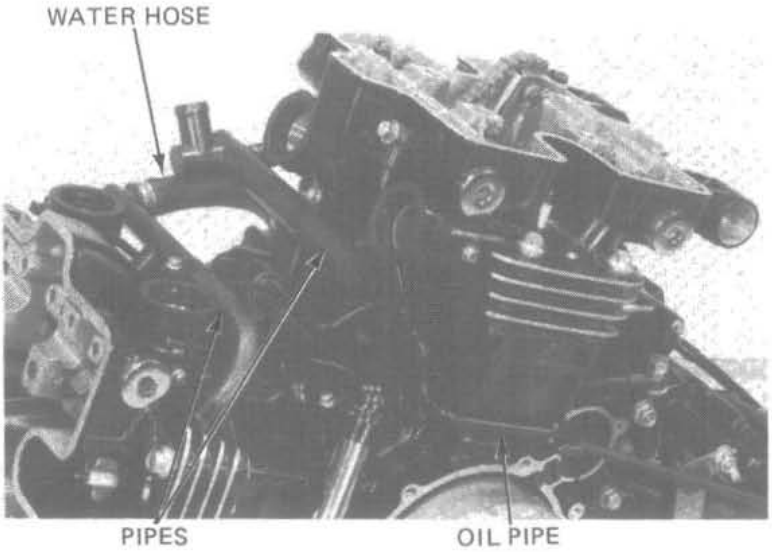

CAMSHAFT INSTALLATION

Lubricate the camshaft journal surfaces of the cylinder head with molybdenum disulfide grease.

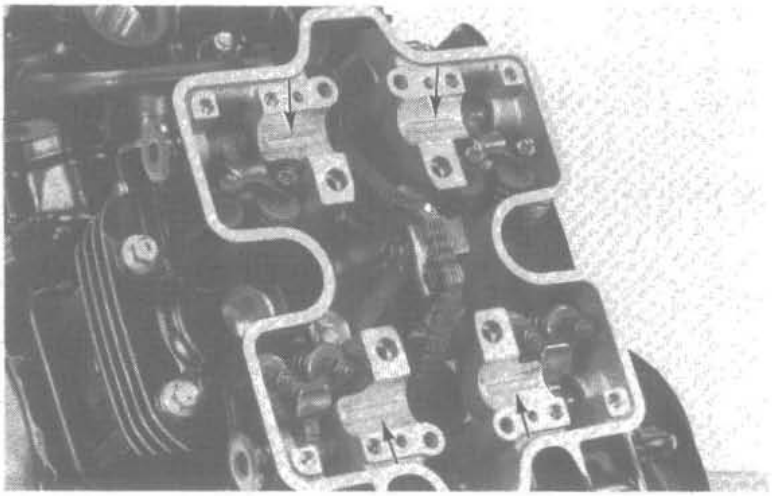

Date of Issue: January, 1982

Place the camshafts through the cam chain and into their correct positions as noted by the sprocket flange directions during disassembly.

The marks on the camshafts mean:

EX: R (ER) – – Rear cylinder exhaust
IN: R (IR) – – Rear cylinder intake
EX: F (EF) – – Front cylinder exhaust
IN: F (IF) – – Front cylinder intake

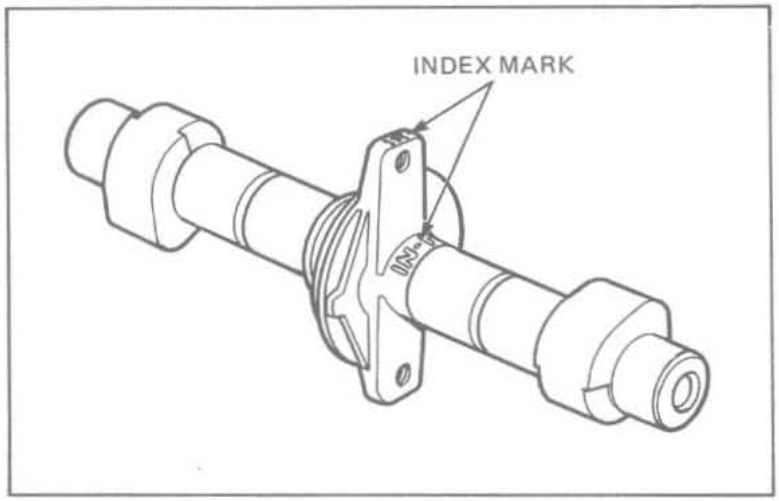

If the front cylinder camshaft sprockets were not indexed during removal, follow the procedure below:

Index the front cylinder camshaft sprockets, six teeth from the original punch marks as shown on the template. Use a water proof marker.

Clean the sprockets with contact cleaner and wipe dry.
On a piece of paper, draw two lines one vertical, one horizontal (perpendicular to each other, 90°). Use a protector and draw two diagonal lines at a 45° angle. Center the sprocket on the lines with the original punch marks aligned on the hoirzontal line.
Make new index marks on the sprocket where the 45° diagonal lines cross the sprocket.

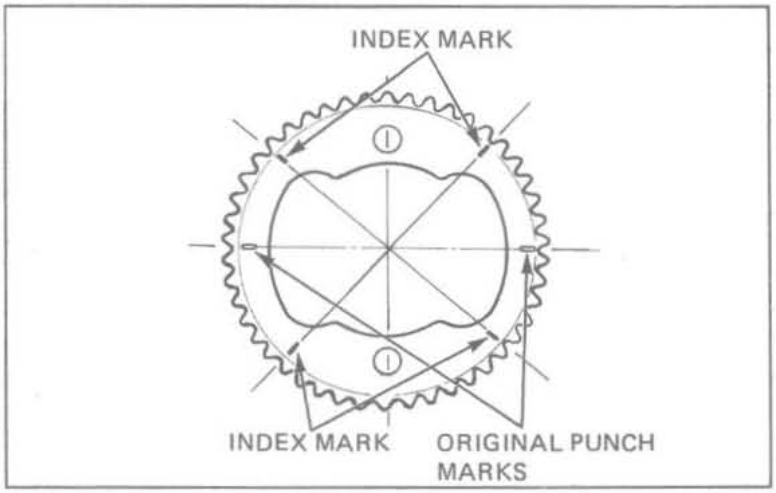

NOTE:

> It is not necessary to make new index marks for the rear cylinder's camshafts sprockets.

Align the cutouts in the camshaft sprockets with the camshaft lobes and place the sprockets over the camshafts.

Install the camshaft holders but do not torque the bolts yet.

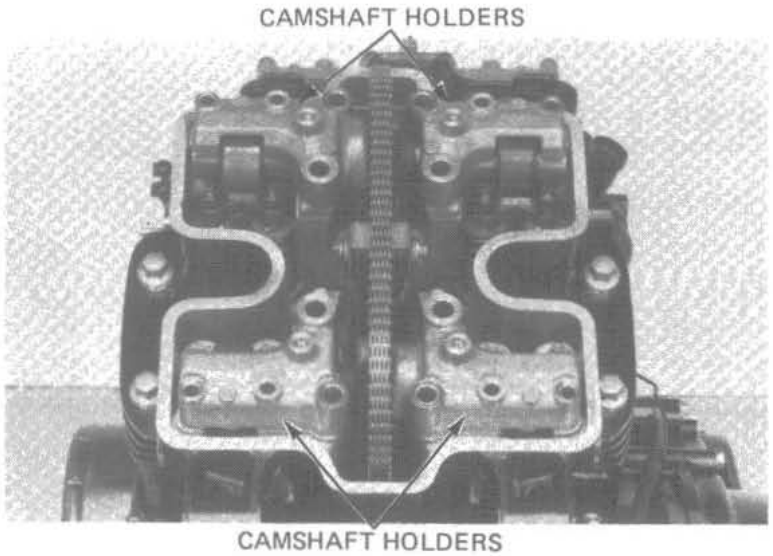

Turn the crankshaft clockwise and align the T1.3 mark on the flywheel rotor with the rear crankcase mating surfaces.

Position the #1, 3 camshafts so that they are positioned as shown.

NOTE:

The cylinders are numbered as shown below:

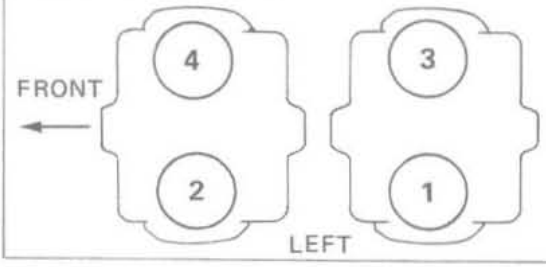

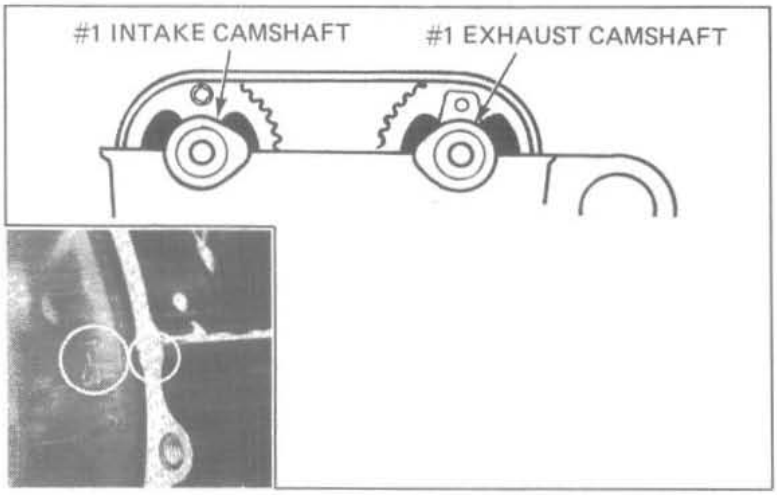

Align the punch marks on the rear cylinder cam sprockets with the top of the rear cylinder head. Place the cam chain on the sprockets.

Position the cam sprockets on the camshaft flanges and loosely install the sprocket bolts.

NOTE:

Apply a locking agent to the threads and underside of the bolt heads before installation.

Install the camshaft holders. Do not torque the bolts until everything is installed and verified.

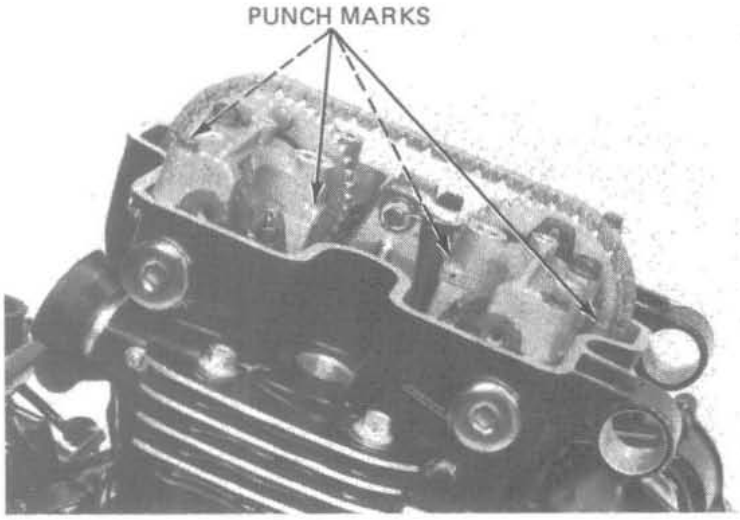

Tighten the rear camshaft holder bolts in a criss-cross pattern in 2–3 steps.

TORQUE VALUES:

8 mm bolt: 20–25 N·m (2.0–2.5 kg-m, 14–18 ft-lb)
6 mm bolt: 10–14 N·m (1.0–1.4 kg-m, 7–10 ft-lb)

NOTE:

Tighten the intake camshaft holders first, then tighten the exhaust camshaft holders.

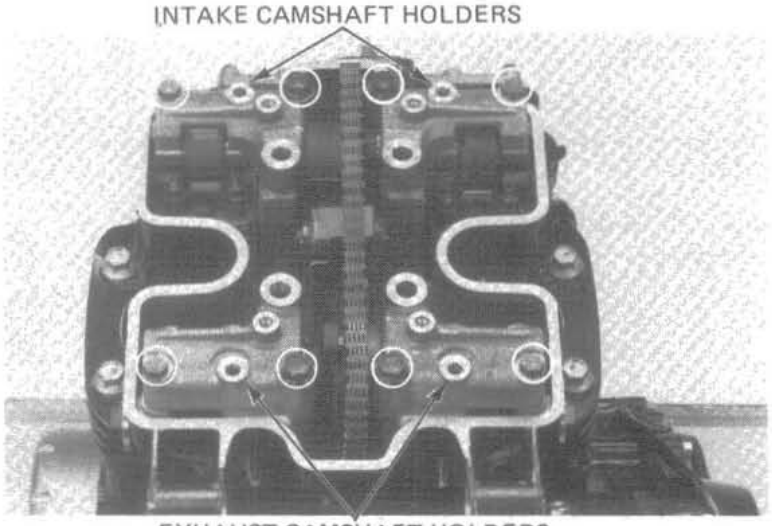

Date of Issue: May, 1982

Turn the crankshaft counterclockwise to align the T2.4 mark with the rear crankcase mating surfaces.

Position the #2, 4 camshafts so that the cams are positioned as shown.

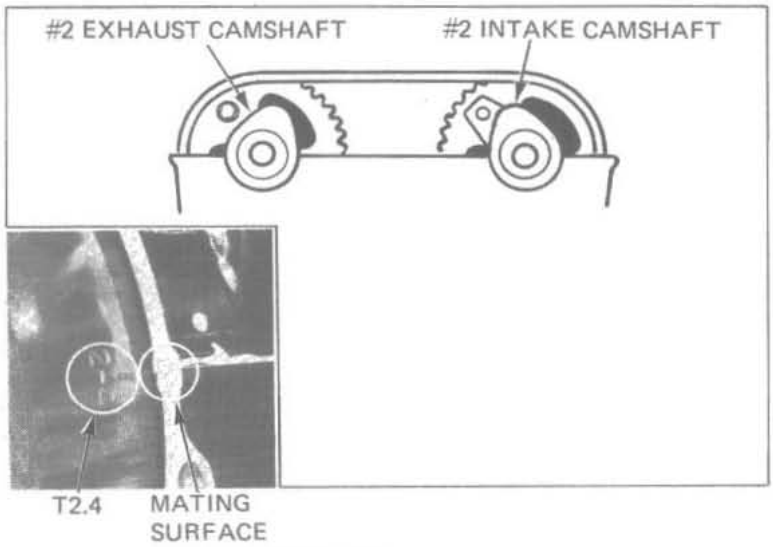

Align the new index marks (page 10-19) on the front cylinders (No. 2, 4) cam sprockets with the top of the front cylinder head.

Then place the cam chain on the sprockets.

Tighten the front cylinder's camshaft holder bolts in a criss-cross pattern in 2–3 steps, in the same manner as used for the rear camshaft holders.

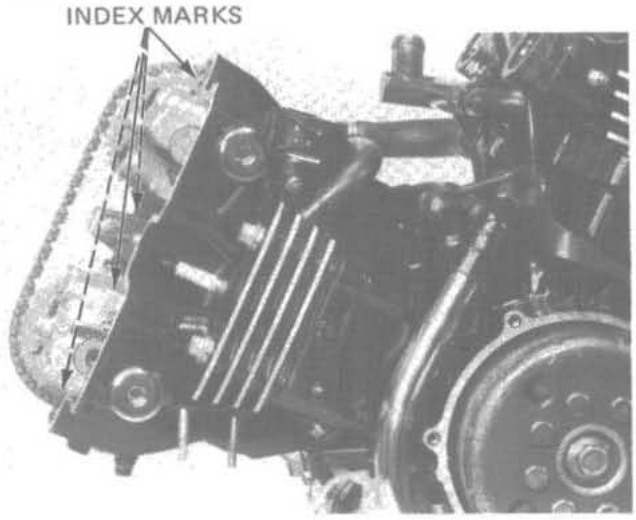

Turn the crankshaft one turn (360°) and install the other cam sprocket bolts.

NOTE:

> Apply a locking agent to the threads and underside of the sprocket bolt heads.

Tighten the cam sprocket bolts to the specified torque.

TORQUE: 18–20 N·m (1.8–2.0 kg-m, 13–14 ft-lb)

Turn the crankshaft one turn (360°) further and tighten the other sprocket bolts to the specified torque.

NOTE:

> Make sure that the punch marks on the cam sprockets align with the top of the cylinder head: The rear cylinder's sprocket punch marks should align at T1,3 and the front cylinder's sprocket new index marks should align at T2,4.

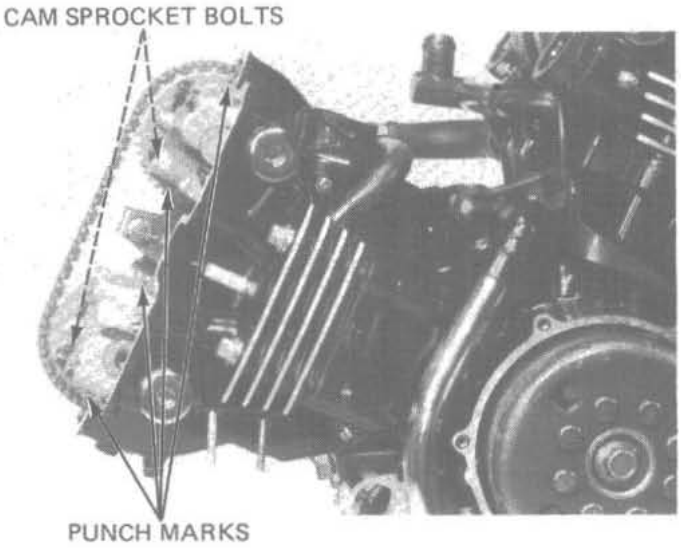

Tighten the tensioner base bolts securely.

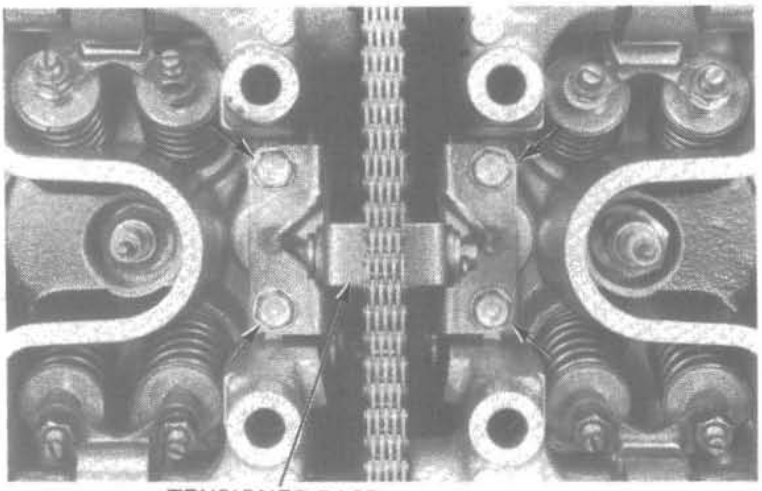

Install the oil pipes under the cam chain.

NOTE:

> When installing the oil pipes, turn the crankshaft clockwise until the cam chain has free play by pushing in the middle of chain.

Install the cam chain guide on the oil pipe base plate aligning the bolt holes.

Tighten the bolts to the specified torque.

TORQUE:
- **CAM CHAIN GUIDE:**
  - **20–25 N·m (2.0–2.5 kg-m, 14–18 ft-lb)**
- **OIL PIPE:**
  - **10–14 N·m (1.0–1.4 kg-m, 7–10 ft-lb)**

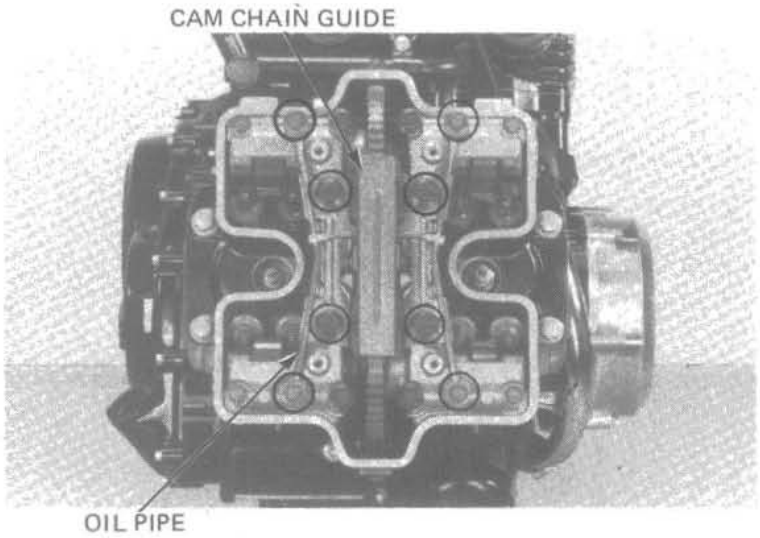

Pull the tensioner lock pin or piece of wire out. Hook the end of a wire into the tensioner arm and pull the arm up while pushing down on the lock plate with a screwdriver, to release the lock plate.

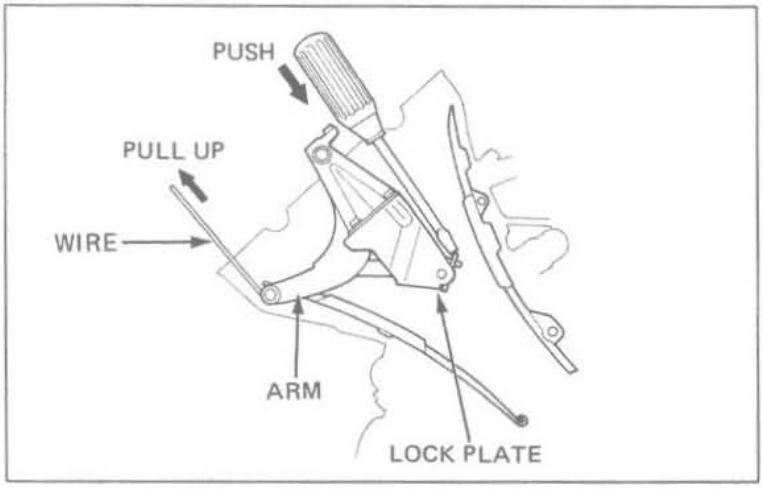

Lubricate the camshaft with engine oil.

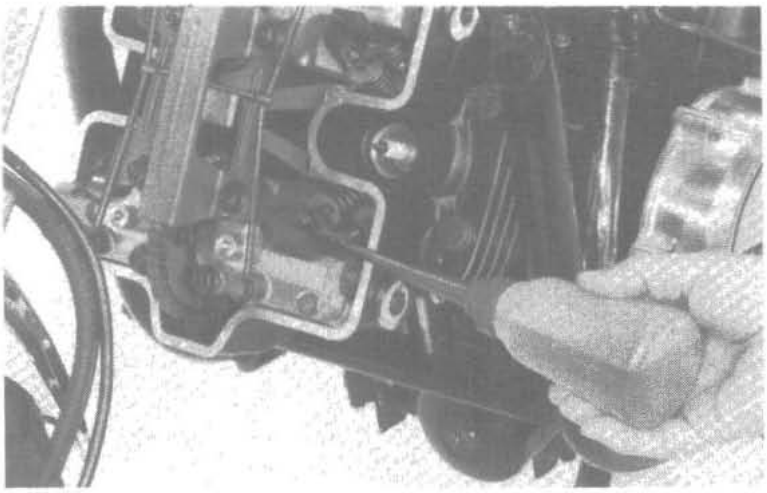

Adjust the valve clearance (page 3–10).

Inspect the cylinder head cover gasket for damage or deterioration.

NOTE:

Clean the gasket before applying sealant.

Locate the tab on the gasket near the arrow casting on the inside of the cover.

Apply sealant to the head cover gaskets.
Install the front cylinder head cover and gasket.
Install the rear cylinder head cover base, cover and gaskets. Note that the arrow casting and gasket tab face the front of the engine.

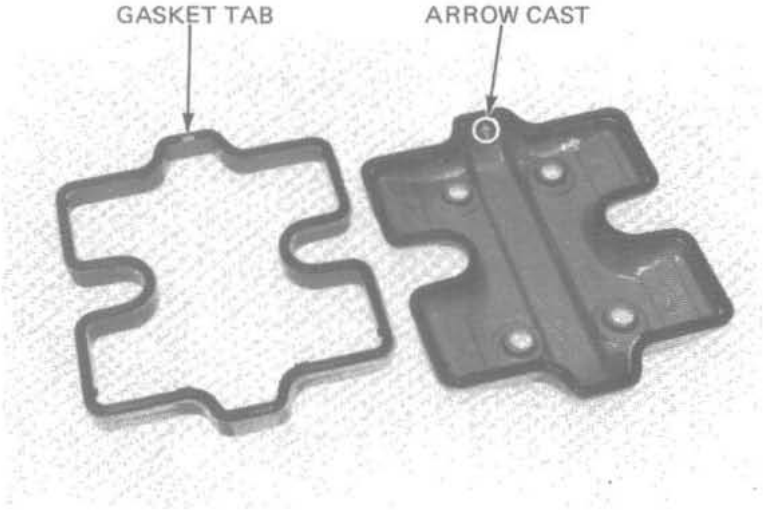

Install the remaining parts in the reverse order of removal.

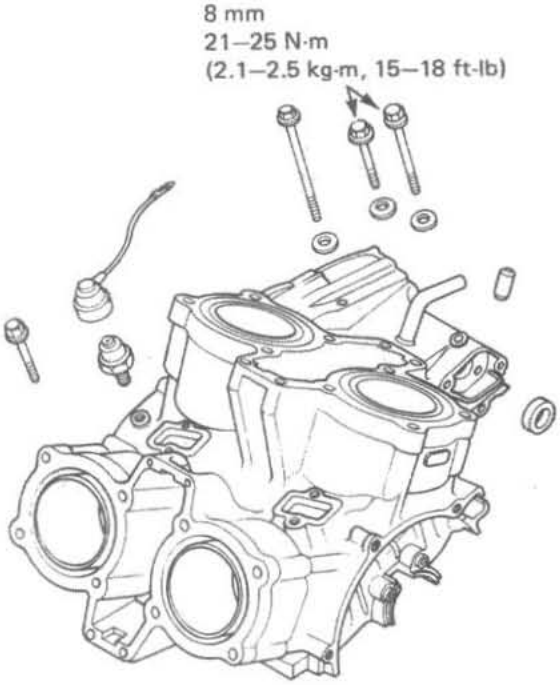

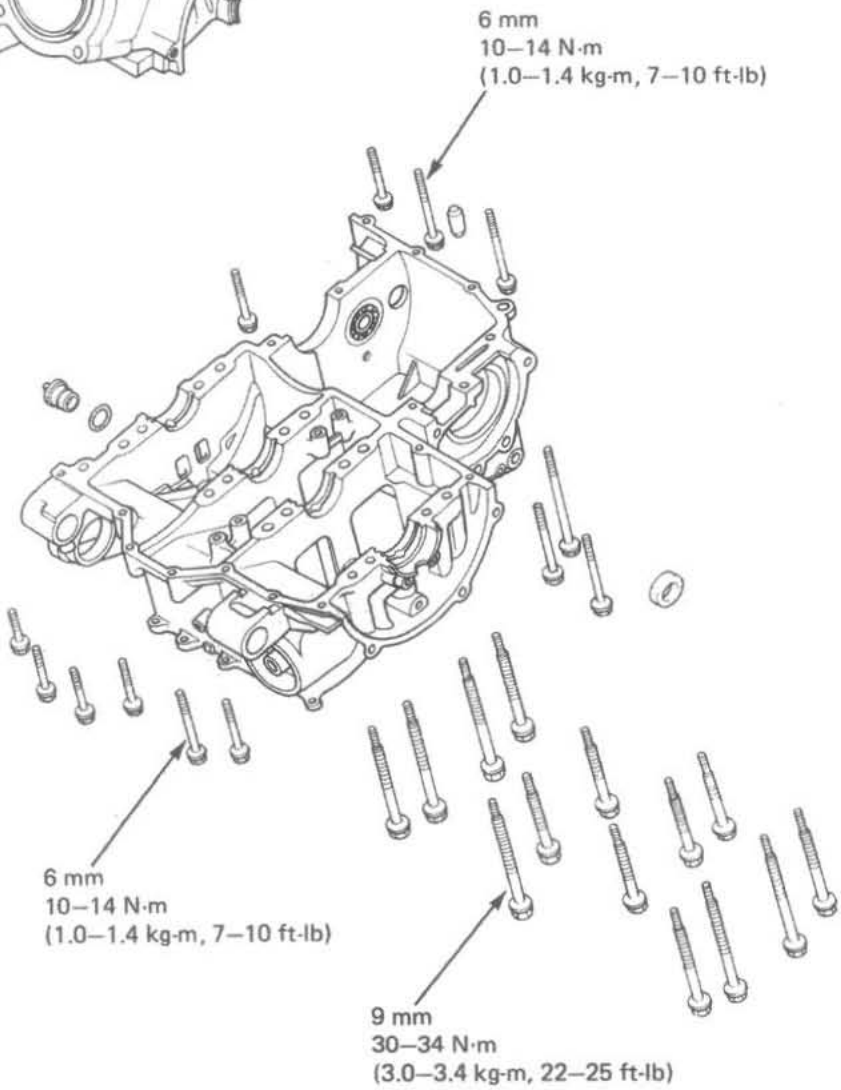

Date of Issue: May, 1982

11. CRANKCASE

SERVICE INFORMATION

GENERAL

- To service the piston, crankshaft, connecting rod and transmission, the crankcase halves must be separated.
- If a new crankcase is installed, perform countershaft shim selection procedures (Page 13-8).
- Whenever the output gear case is removed, perform gasket selection procedures (Page 11-6).
- The following parts must be removed before disassembling the crankcase.

· Oil pan	Refer to section 2
· Oil pump	Refer to section 2
· Water pump	Refer to section 6
· Clutch/starter clutch	Refer to section 7
· Gear shift linkage	Refer to section 8
· Alternator	Refer to section 9
· Cylinder heads	Refer to section 10
· Starter motor	Refer to section 21
· Gear shift indicator switch	

TORQUE VALUES

9 mm bolt:	30–34 N·m (3.0–3.4 kg·m, 22–25 ft·lb)
8 mm bolt:	21–25 N·m (2.1–2.5 kg·m, 15–18 ft·lb)
6 mm bolt:	10–14 N·m (1.0–1.4 kg·m, 7–10 ft·lb)

TOOLS

Special

Driver	07946–3710000

Common

Attachment, 62 x 68 mm	07746–0010500
Pilot, 25 mm	07746–0040600

CRANKCASE DISASSEMBLY

Remove the upper crankcase bolts. Refer to service Information General (page 11-1) for removal of necessary parts before disassembling crankcase.

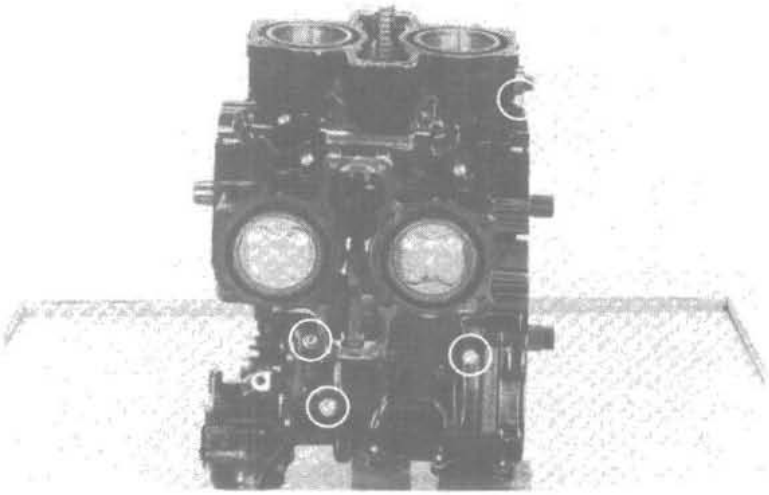

Remove the mainshaft bearing holder by removing the screw and bolts.

Remove the crankcase bolt located below the holder.

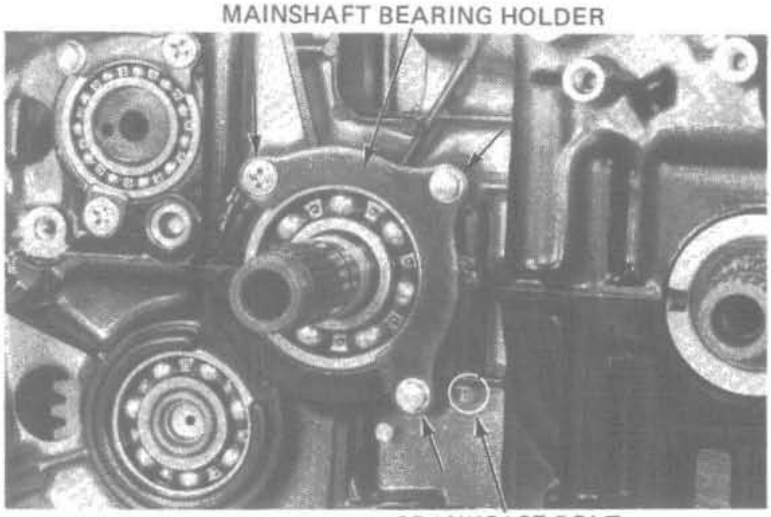

Turn the engine over and remove the lower crankcase bolts.

NOTE:

> Remove the bolts in two or more steps and in a crisscross pattern to prevent damage to the crankcase.

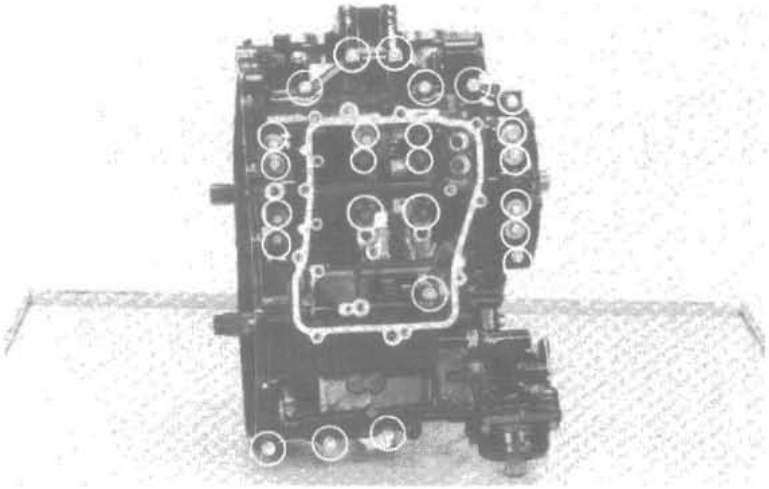

Date of Issue: May, 1982

Remove the output gear case mounting bolts and output gear case.
Measure the thickness of the output gear case gasket and note it.

NOTE:

- Whenever removing the output gear case, perform output gear case gasket selection, if not measured right away.
- Index the bearing holder to the case for ease of reinstallation.

Separate the crankcase.

Remove the following parts:
- Piston and connecting rods (Section 12).
- Crankshaft (Section 13).
- Shift fork and shift drum (Section 13).
- Gear shift indicator switch.
- Transmission (Section 13).

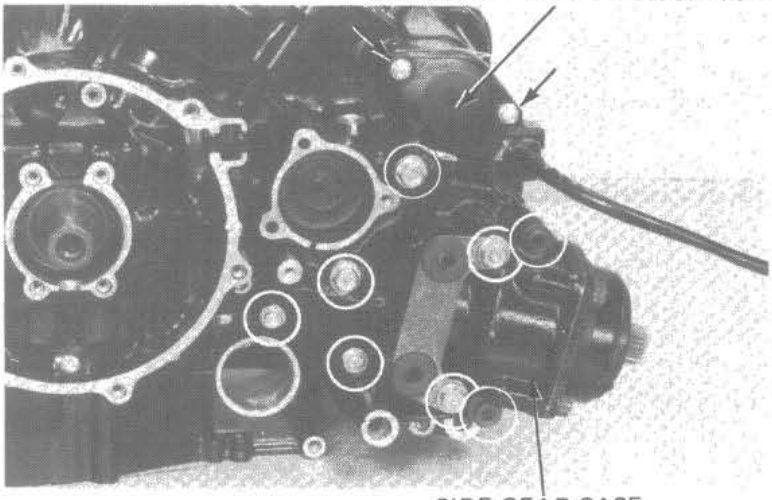

Drive the countershaft bearing out of the case.

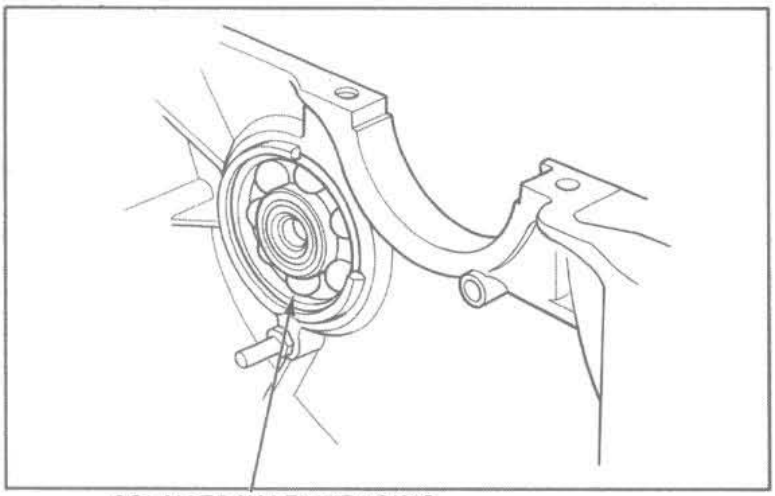

CRANKCASE ASSEMBLY

Drive the countershaft bearing into the crankcase.

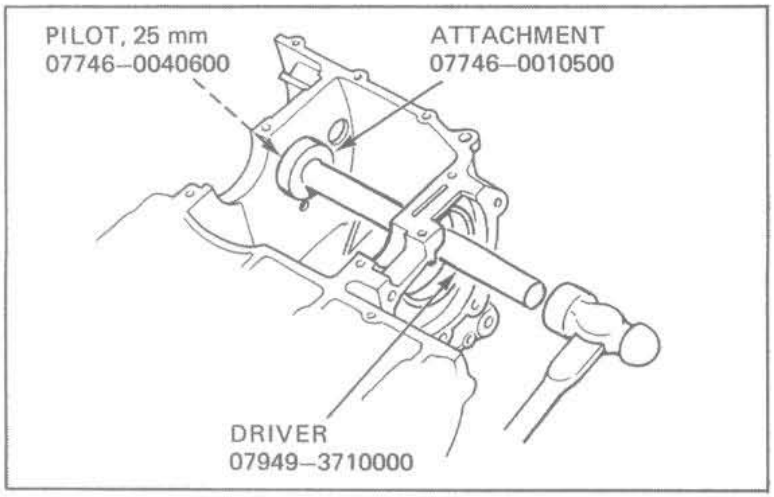

Install the following parts:
- Shift fork and shift drum (Section 13).
- Transmission (Section 13).
- Crankshaft (Section 12).
- Piston and connecting rods (Section 12).

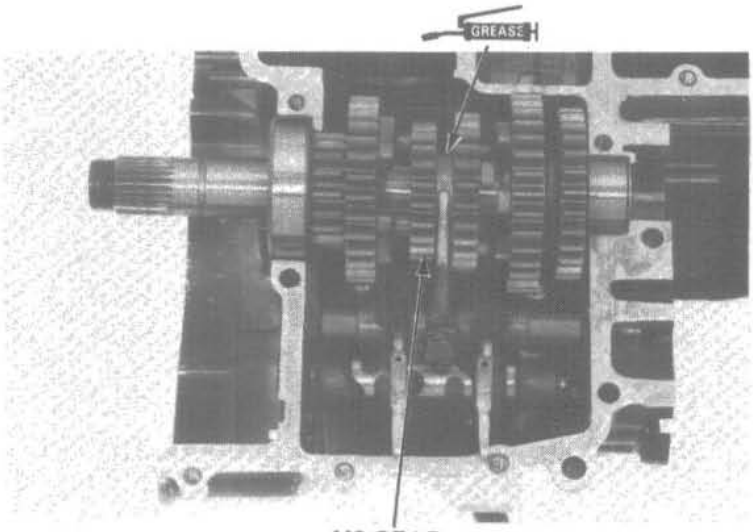

Apply molybdenum disulfide grease to the shift fork grooves of the M2, C4 and C6 gears.

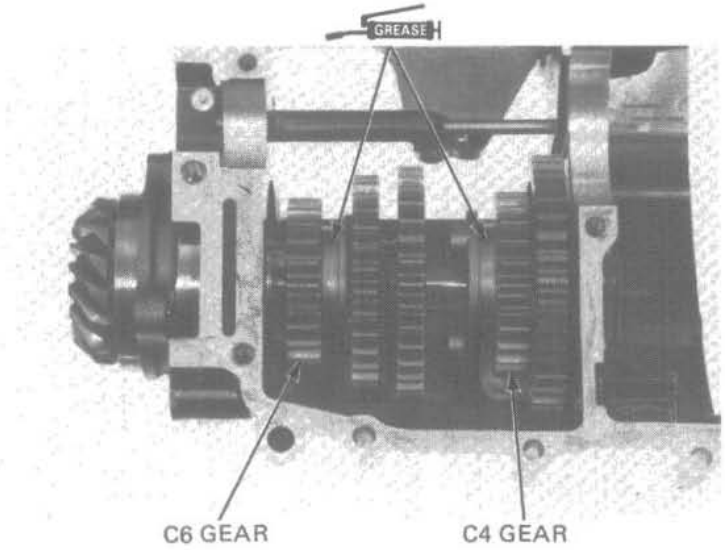

Date of Issue: May, 1982

Clean the crankcase mating surfaces.
Apply liquid sealant to the mating surface of the lower and upper crankcase.

CAUTION:

Do not apply sealant to the area near the main bearings.

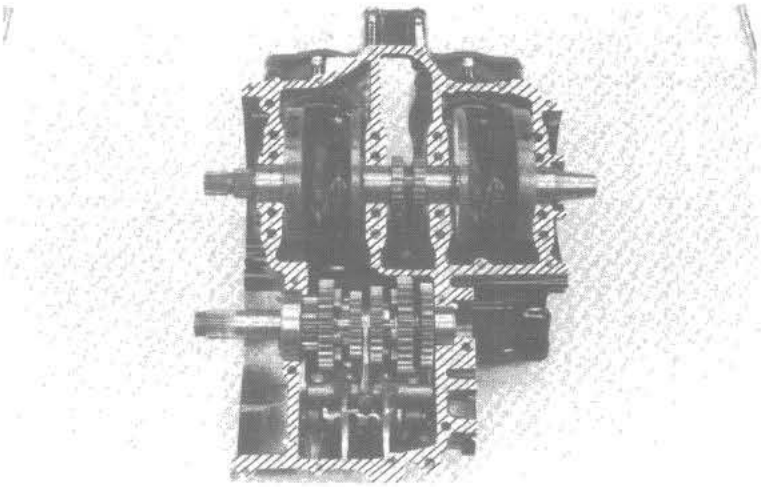

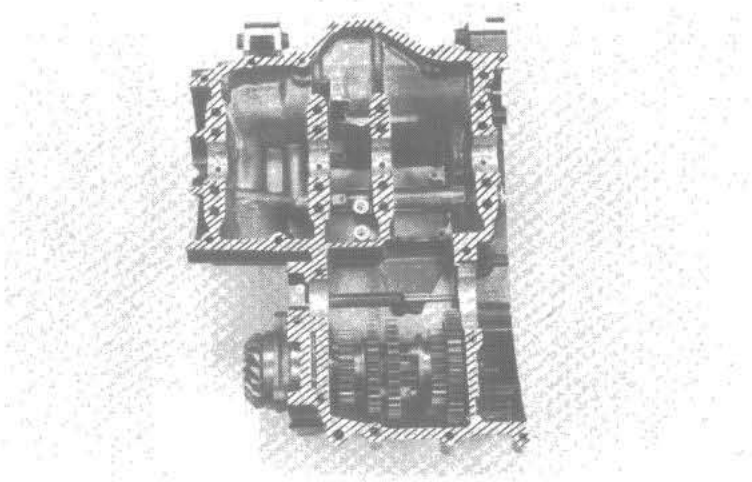

Assemble the crankcase halves, aligning the shift fork claws with the gears.
Tighten the bolts to the specified torque values in the sequence shown.

TORQUE VALUES:

9 mm bolt: 30–34 N·m (3.0–3.4 kg-m, 22–25 ft-lb)
6 mm bolt: 10–14 N·m (1.0–1.4 kg-m, 7–10 ft-lb)

Tighten the bolts in a crisscross pattern and in 2–3 steps.

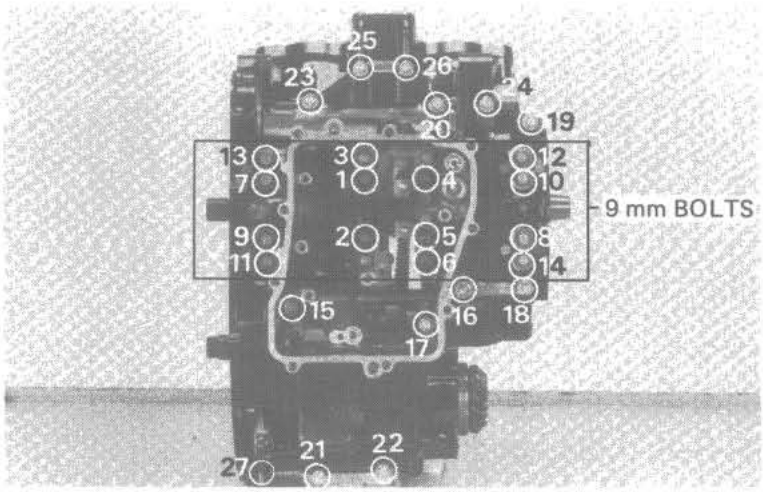

Tighten the upper crankcase bolts to the specified torque in a crisscross pattern and in 2–3 steps.

TORQUE: 8 mm: 21–25 N·m (2.1–2.5 kg-m, 15–18 ft-lb)
6 mm: 10–14 N·m (1.0–1.4 kg-m, 7–10 ft-lb)

NOTE:

> Make sure that the plain washers are under the bolt heads of the three crankcase mounting bolts shown.

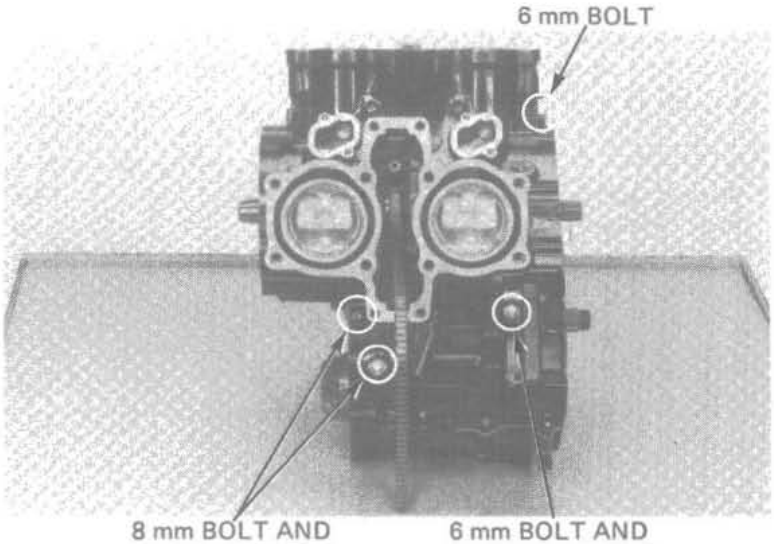

Install the mainshaft bearing holder and tighten the screw and bolt.

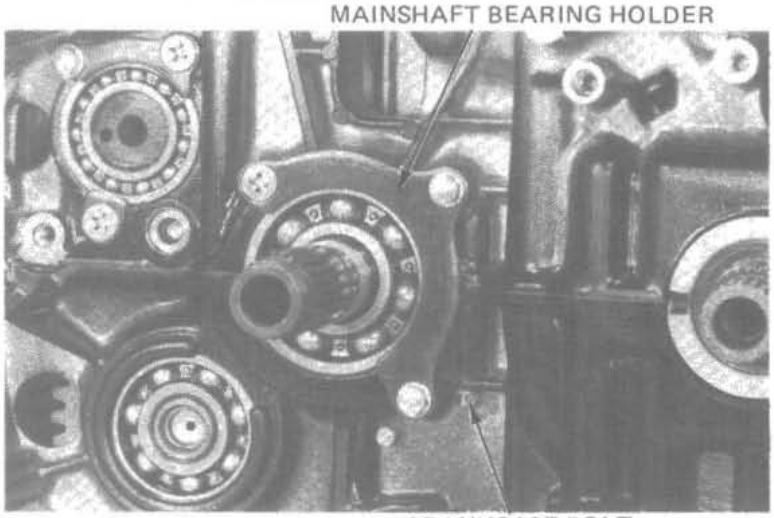

Install a new output gear case gasket with one of the same thickness as removed.

NOTE:

> - If the gasket was not measured during disassembly, refer to page 13-6 for gasket selection procedures.
> - Early production engines had gaskets that were not marked.
> - The gasket is crushed 0.05 mm when the output gear case is installed.

Install the output gear case with a new gasket. Install the bolts and sealing washers and then tighten to the specified torque.

TORQUES:
Output gear case bearing holder bolts: 30–34 N·m (3.0–3.4 kg-m, 22–25 ft-lb)
8 mm bolts/socket bolts: 21–25 N·m (2.1–2.5 kg-m, 14–18 ft-lb)
6 mm bolts: 10–14 N·m (1.0–1.4 kg-m, 7–10 ft-lb)

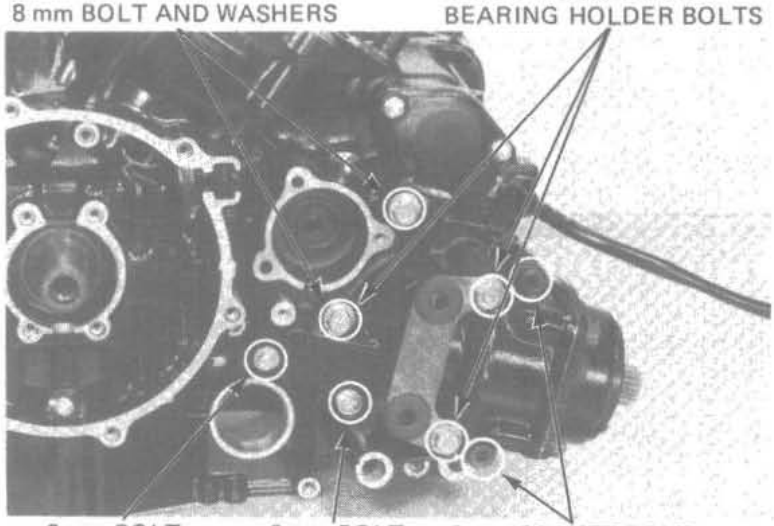

Date of Issue: May, 1982

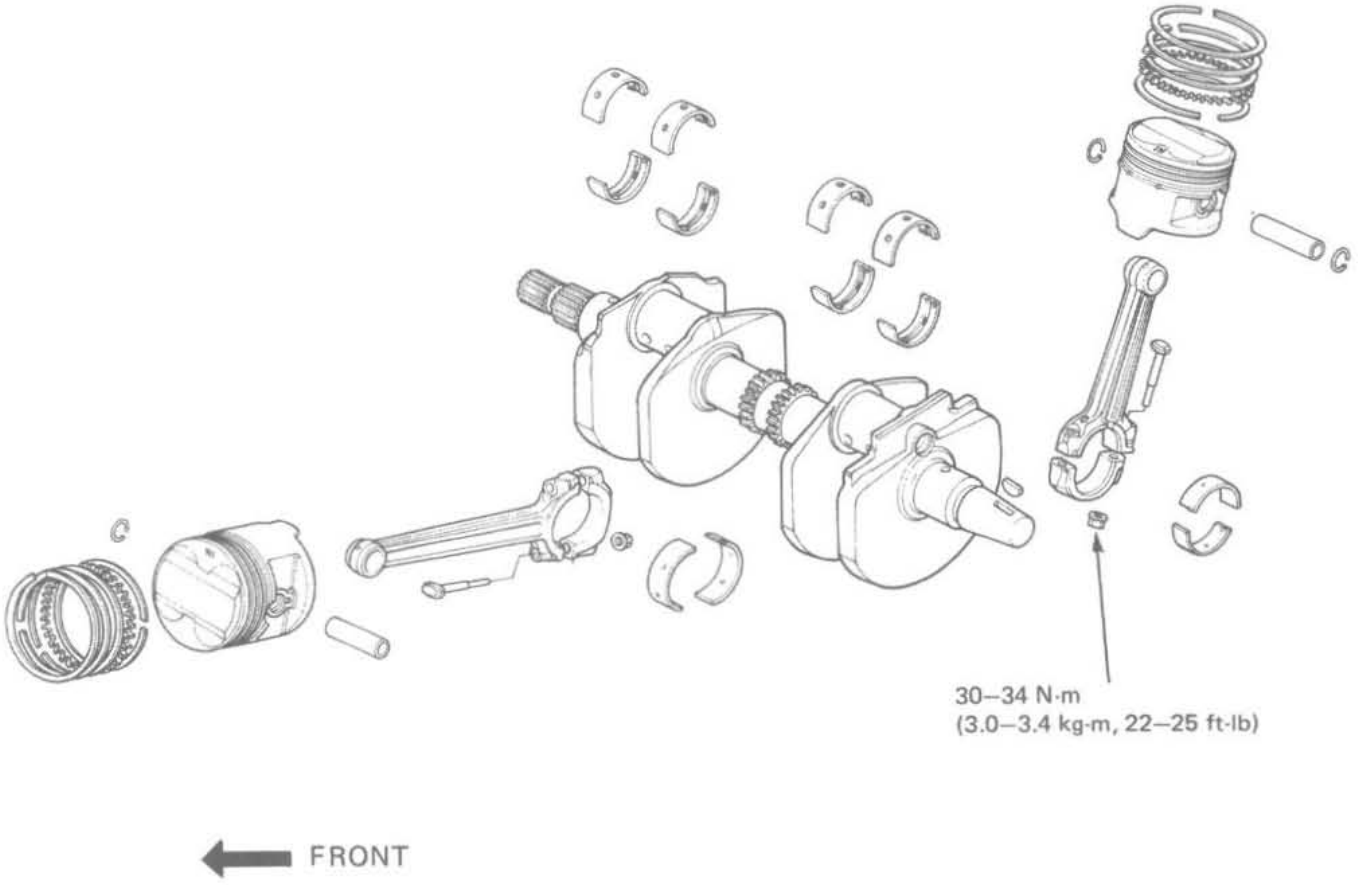

12. CRANKSHAFT/PISTON

SERVICE INFORMATION

GENERAL

- All bearing inserts are select fit and are identified by color code. Select replacement bearings from the code tables. After installing new bearings, recheck them with plastigauge to verify clearance.
- Apply molybdenum disulfied grease to the main journals and crankpins during assembly.
- Before removing the piston and connecting rod assemblies, clean the top of the cylinder of any carbon deposits.
- For servicing the piston, connecting rod and crankshaft, the crankcase assembly must be separated (Section 11).

SPECIFICATIONS

	ITEM		STANDARD	SERVICE LIMIT
Crankshaft	Connecting rod big end side clearance		0.10–0.30 mm (0.004–0.012 in)	0.40 mm (0.016 in)
	Runout		—	0.03 mm (0.001 in)
	Crankpin oil clearance		0.028–0.052 mm (0.0011–0.0020 in)	0.08 mm (0.003 in)
	Main journal oil clearance		0.028–0.052 mm (0.0011–0.0020 in)	0.08 mm (0.003 in)
Cylinder	I.D.		70.000–70.015 mm (2.755–2.756 in)	70.10 mm (2.76 in)
	Warpage		—	0.10 mm (0.004 in)
Piston	Ring-to-groove clearance	Top	0.015–0.045 mm (0.0006–0.0018 in)	0.10 mm (0.004 in)
		Second	0.015–0.045 mm (0.0006–0.0018 in)	0.10 mm (0.004 in)
	Ring end gap	Top	0.10–0.30 mm (0.004–0.012 in)	0.50 mm (0.020 in)
		Second	0.10–0.30 mm (0.004–0.012 in)	0.50 mm (0.020 in)
		Oil (Side rail)	0.30–0.90 mm (0.012–0.035 in)	1.1 mm (0.04 in)
	Piston O.D.		69.960–69.990 mm (2.754–2.755 in)	69.85 mm (2.750 in)
	Piston-to-cylinder clearance		0.01–0.055 mm (0.004–0.002 in)	0.10 mm (0.004 in)
	Piston pin bore		18.002–18.008 mm (0.7087–0.7090 in)	18.1 mm (0.71 in)
	Piston pin O.D.		17.994–18.000 mm (0.7084–0.7086 in)	17.98 mm (0.70 in)
	Piston-to-piston pin clearance		0.002–0.014 mm (0.0001–0.0006 in)	0.04 mm (0.002 in)
	Connecting rod small end I.D.		18.016–18.034 mm (0.7093–0.7100 in)	18.08 mm (0.712 in)
	Piston pin-to-connecting rod clearance		0.016–0.040 mm (0.0006–0.0016 in)	0.060 mm (0.0024 in)
Cam chain	Length at 13 kg (29 lb) tension		323.85–324.30 mm (12.750–12.767 in)	326.120 mm (12.84 in)

TORQUE:

Crankpin: 30–34 N·m (3.0–3.4 kg-m, 22–25 ft-lb)

TOOL

Special
Piston Ring Compressor — 07954–2830000 or Commercially available compressor (Automotive style)

TROUBLESHOOTING

Excessive noise

1. Crankshaft
   - Worn main bearing
   - Worn rod bearing

2. Piston and Connecting Rod
   - Worn piston or cylinder
   - Worn piston pin or pin hole
   - Worn rod small end

Low compression or uneven compression

1. Worn cylinder or piston ring

Excessive smoke

1. Worn cylinder, piston or piston rings
2. Improperly installed piston rings
3. Damaged piston or cylinder

Overheating

1. Excessive carbon build-up on piston head
2. Blocked or restricted flow of coolant
3. Sticking thermostat

Knocking or abnormal noise

1. Worn pistons and cylinders
2. Excessive carbon build-up on piston head.

Date of Issue: January, 1982

CONNECTING ROD REMOVAL

Separate the crankcase assembly (Section 11).

Check the connecting rod side clearance.

SERVICE LIMIT: 0.40 mm (0.016 in)

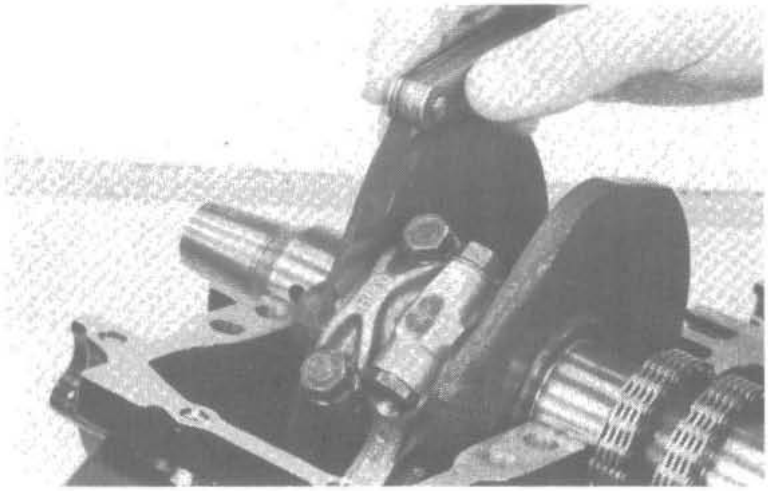

Remove the connecting rod bearing caps and note their locations.

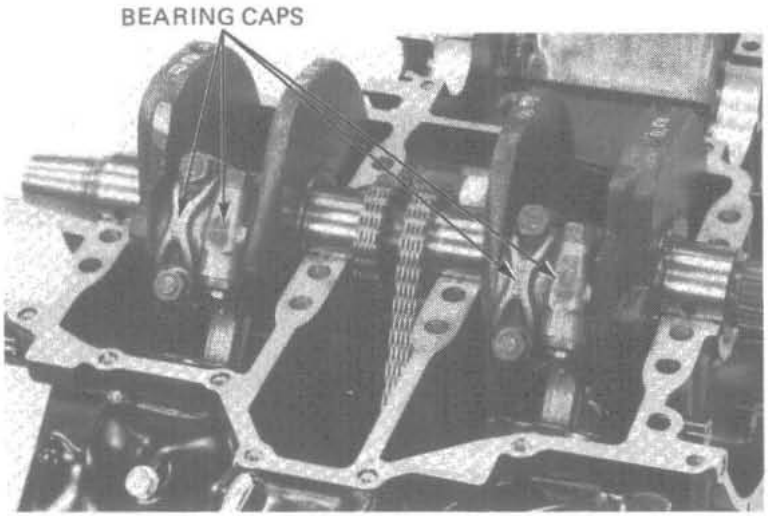

Push the connecting rods and piston out through the top of the cylinder bores.

CAUTION:

On engines with high mileage, inspect the cylinders for a ridge just above the highest point of ring travel. Any ridge must be removed with an automotive type ridge reamer before removing the pistons to allow the pistons and rings to pass through the cylinder.

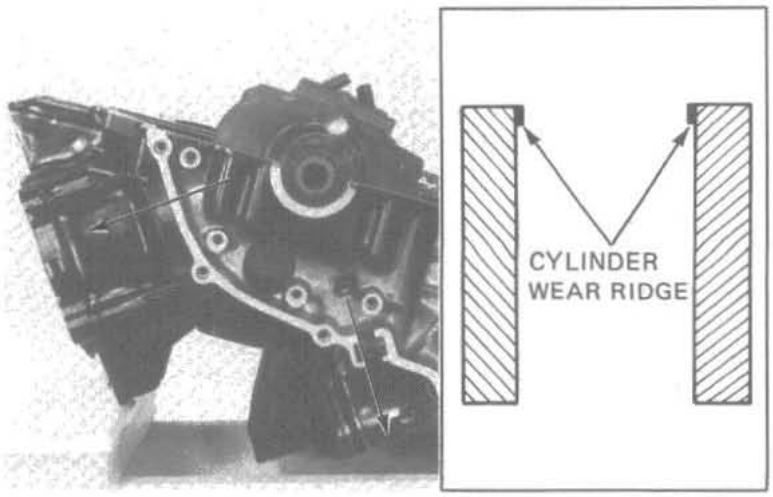

Mark the rods, pistons, bearings and caps as you remove them to indicate the correct cylinder and position on the crankpins.

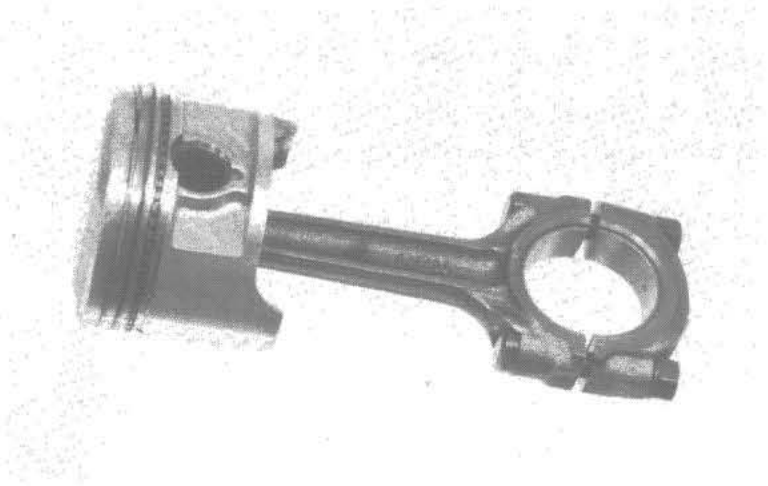

PISTON REMOVAL

Remove the piston pin clips, push the piston pin out and remove the piston.

Mark the piston pins to indicate their correct piston position.

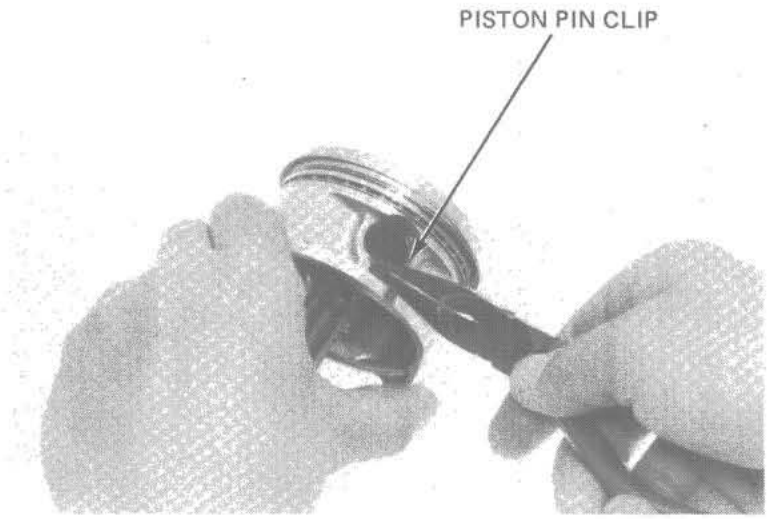

PISTON/PISTON RING INSPECTION

Measure the piston ring-to-groove clearance.

SERVICE LIMIT: 0.10 mm (0.004 in) (TOP/SECOND)

Remove the piston rings and mark them to indicate the correct cylinder and piston position.

Clean the piston crown, removing all carbon deposits.
Inspect the piston for cracks or other damage and the ring grooves for excessive wear and carbon build-up.

Date of Issue: May, 1982

Using a piston, push the ring into the cylinder squarely and measure the end gap.

SERVICE LIMITS:

TOP:	0.5 mm (0.02 in)
SECOND:	0.5 mm (0.02 in)
OIL (Side rail):	1.1 mm (0.04 in)

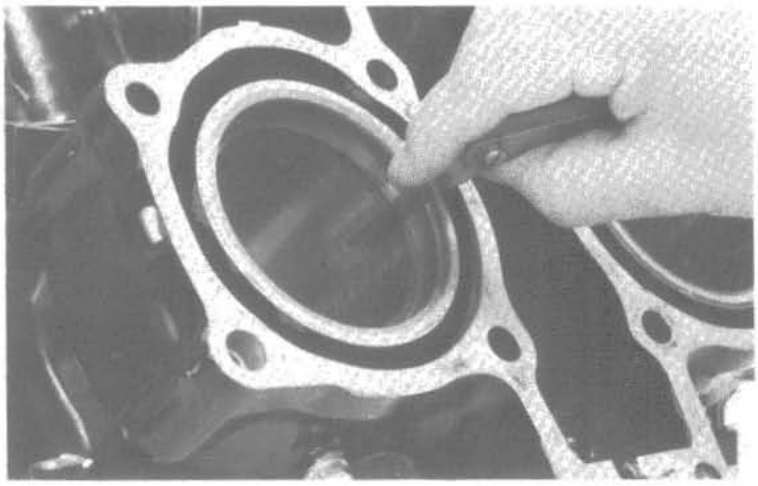

Measure the piston O.D.

NOTE:

> Take measurements 10 mm (0.4 in) from the bottom, and 90° to the piston pin hole.

SERVICE LIMIT: 69.85 mm (2.750 in)

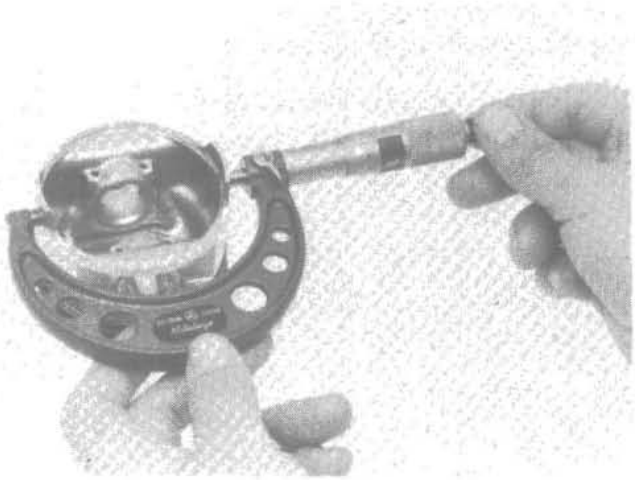

Inspect the cylinder bores for wear or damage. Measure the cylinder I.D. at three levels in X and Y axis.

SERVICE LIMIT: 70.10 mm (2.76 in)

Calculate the piston-to-cylinder clearance.

SERVICE LIMIT: 0.10 mm (0.004 in)

Oversize pistons are available in the following sizes:

0.25, 0.50, 0.75 and 1.00 mm.

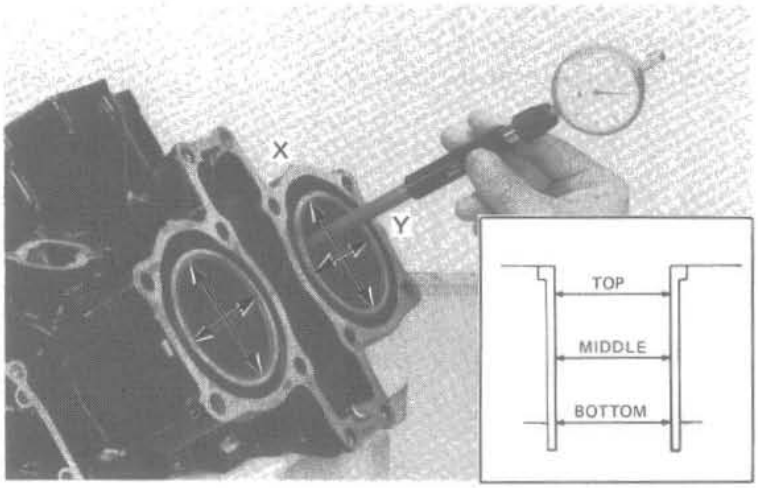

Measure each piston pin hole I.D.

SERVICE LIMIT: 18.06 mm (0.71 in)

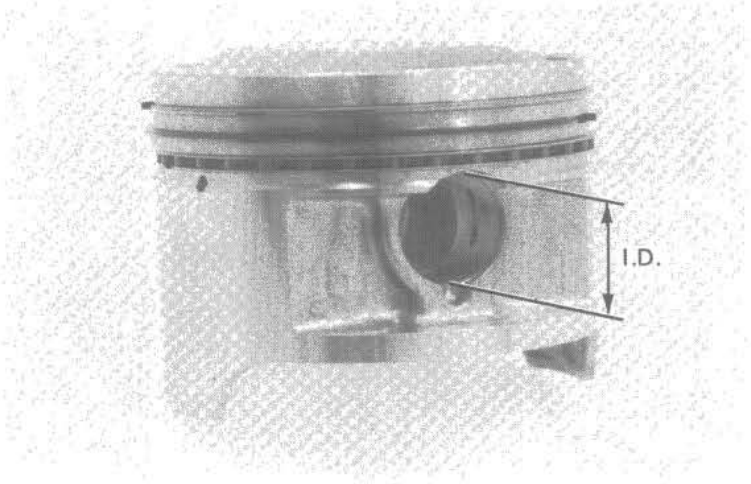

Measure each piston pin O.D.

SERVICE LIMIT: 17.98 mm (0.70 in)

Calculate the piston pin to piston clearance.

SERVICE LIMIT: 0.04 mm (0.002 in)

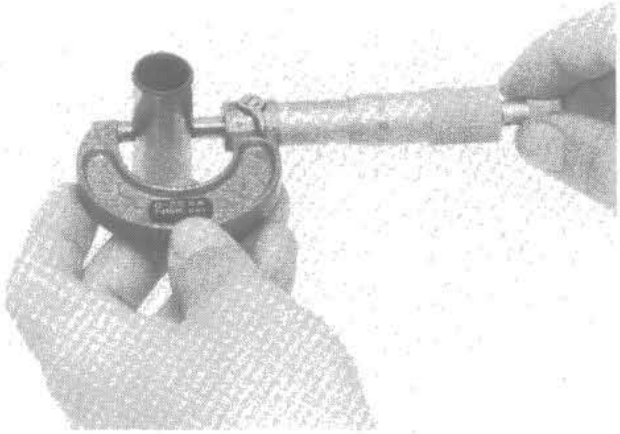

Measure the connecting rod small end I.D. If the reading exceeds the service limit, replace the rod.

SERVICE LIMIT: 18.08 mm (0.712 in)

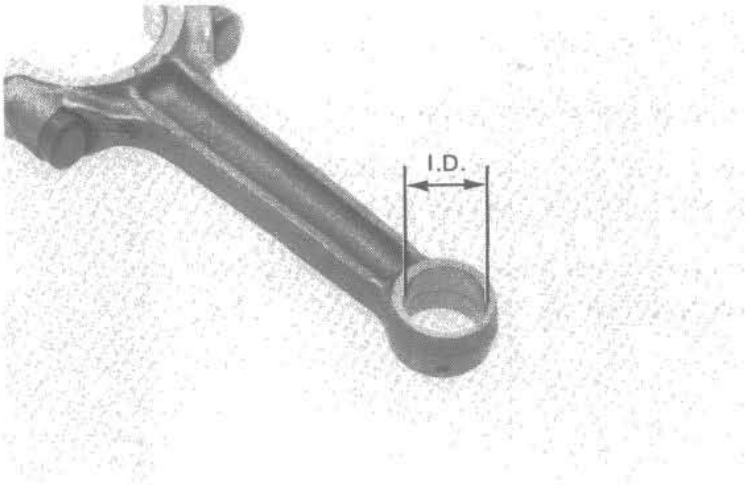

Date of Issue: January, 1982

CRANKSHAFT REMOVAL

Remove the crankshaft.
Remove the cam chain.

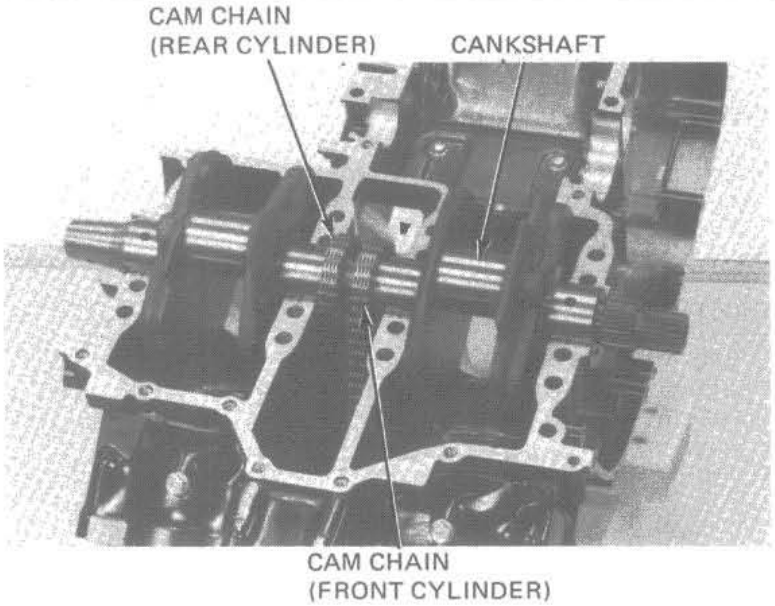

CRANKSHAFT INSPECTION

Set the crankshaft on a stand or Vee blocks.
Set a dial indicator on the center main bearing journal. Rotate the crankshaft two revolutions and read the runout.

Actual runout is 1/2 of the total indicator reading.

SERVICE LIMIT: 0.03 mm (0.001 in)

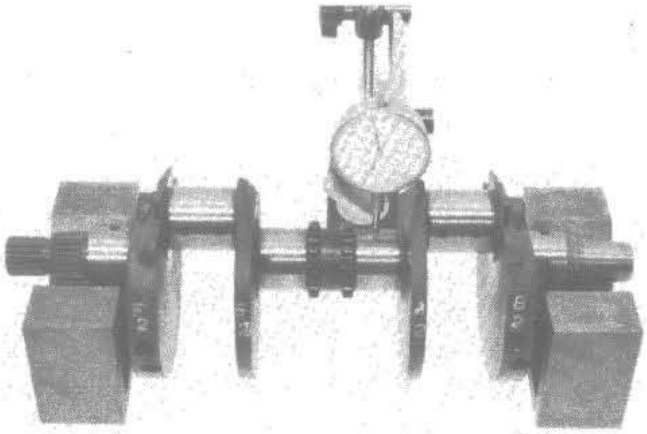

CAM CHAIN LENGTH MEASUREMENT

Place the cam chain on the camshaft sprockets with the punch marks positioned as indicated.
Secure one camshaft sprocket and apply 13 kg (29 lbs) of tension to the other.
Then measure the distance between the punch marks as shown.

SERVICE LIMIT: 326.120 mm (12.84 in)

NOTE:

The punch marks should be parallel to each other.

Replace the cam chain if it is longer than the service limit.

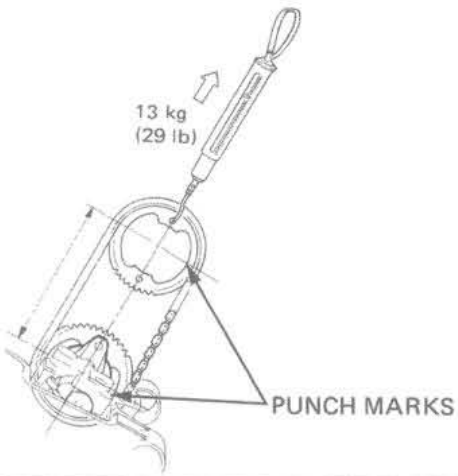

BEARING INSPECTION

CONNECTING RODS

Inspect the bearing inserts for damage or separation. Clean all oil from the bearing inserts and crankpins. Put a piece of plastigauge on each crankpin avoiding the oil hole.

CAUTION:

> *The bearing tabs should face toward the exhaust parts. Remember the front and rear cylinder exhaust ports face opposite directions.*

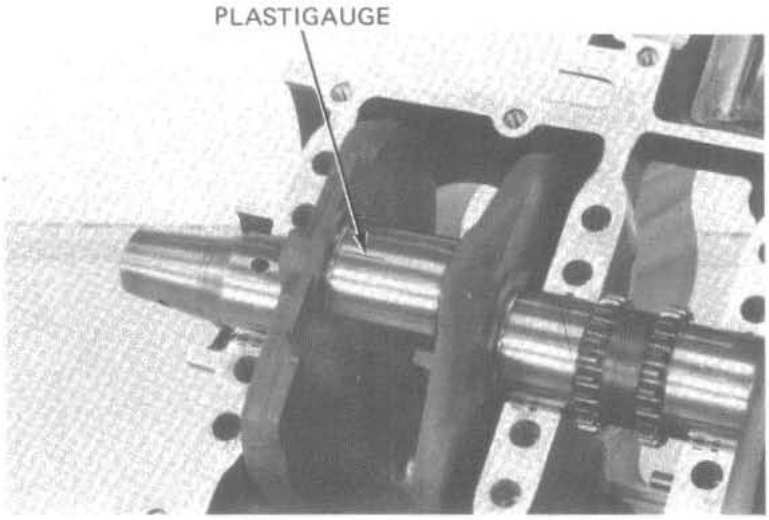

Install the bearing caps and rods on the correct crankpins, and tighten them evenly.

TORQUE: 30–34 N·m (3.0–3.4 kg-m, 22-25 ft-lb)

NOTE:

> Do not rotate the crankshaft during inspection.

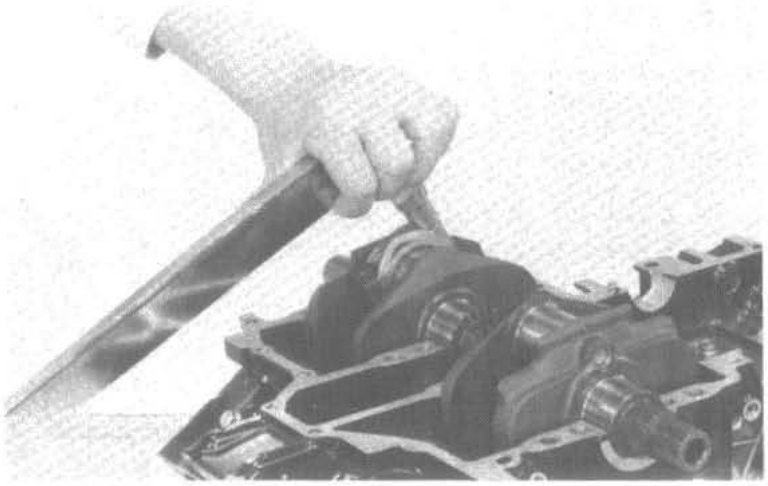

Remove the caps and measure the compressed plastigauge on each crankpin.

OIL CLEARANCE SERVICE LIMIT:
0.08 mm (0.003 in)

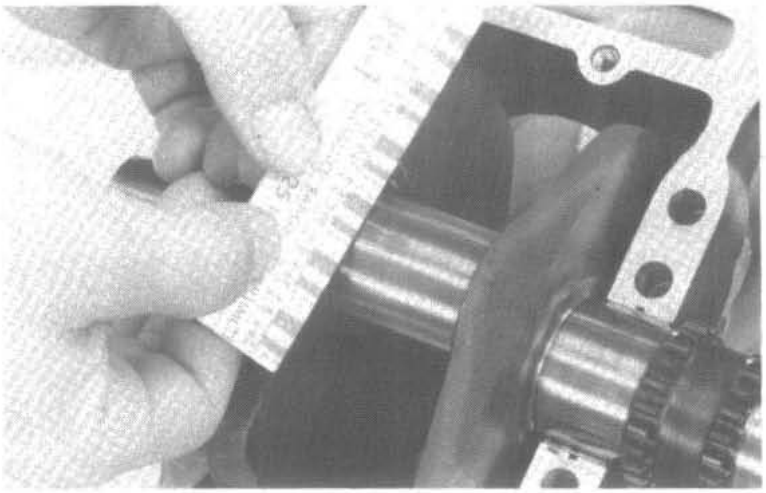

MAIN BEARINGS

Inspect the bearing inserts for damage or separation. Clean all oil from the bearing inserts and journals. Put a piece of plastigauge on each journal, avoiding the oil holes.

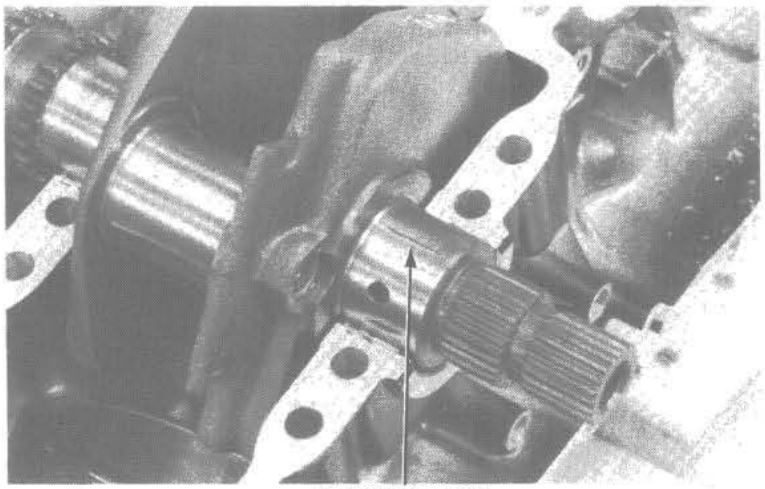

Install the main bearings on the correct journals on the lower crankcase and tighten them evenly in 2–3 steps in the sequence shown.

TORQUE VALUES:
6 mm bolt: 10–14 N·m (1.0–1.4 kg-m, 7–10 ft-lb)
9 mm bolt: 30–34 N·m (3.0–3.4 kg-m, 22–25 ft-lb)

NOTE:

Do not rotate the crankshaft during inspection.

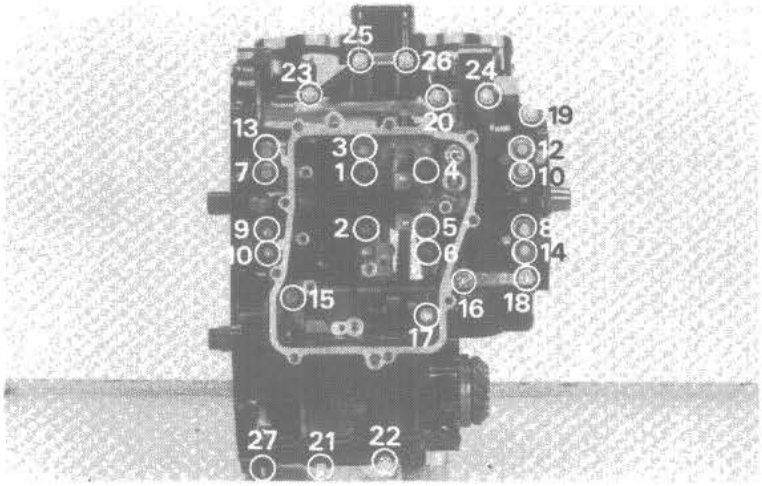

Remove the lower crankcase and measure the compressed plastigauge on each journal.

OIL CLEARANCE SERVICE LIMIT:
0.08 mm (0.003 in)

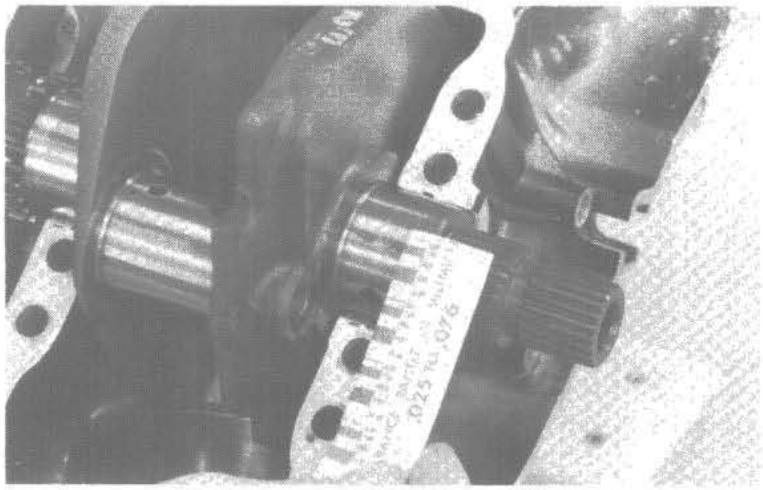

BEARING SELECTION

If rod bearing clearance is beyond tolerance, select replacement bearings as follows:

CONNECTING ROD BEARING INSERTS

Determine and record the corresponding rod I.D. code number.

NOTE:

> Number 1, 2 or 3 on each connecting rod is the code for each connecting rod I.D.

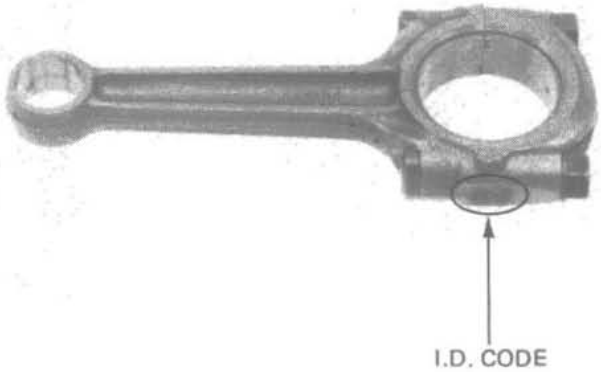

Determine and record the corresponding crankpin O.D. code number (or measure the crankpin O.D.).

NOTE:

> The letters A, B or C on each crank weight is the code for each crankpin O.D.

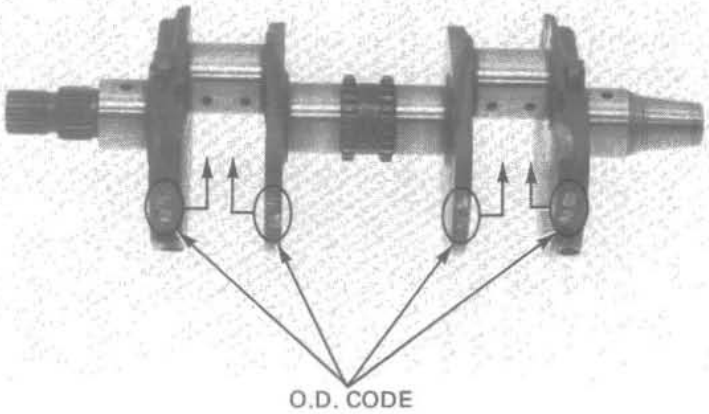

Cross reference the crankpin and rod codes to determine the replacement bearing color.

			CRANKPIN O.D. CODE NO.		
			A	B	C
			35.992–36.000 mm	35.984–35.992 mm	35.976–35.984 mm
CONNECTING ROD I.D. CODE NO.	1	39.000–39.008 mm	E (Yellow)	D (Green)	C (Borwn)
	2	39.008–39.016 mm	D (Green)	C (Brown)	B (Black)
	3	39.016–39.024 mm	C (Brown)	B (Black)	A (Blue)

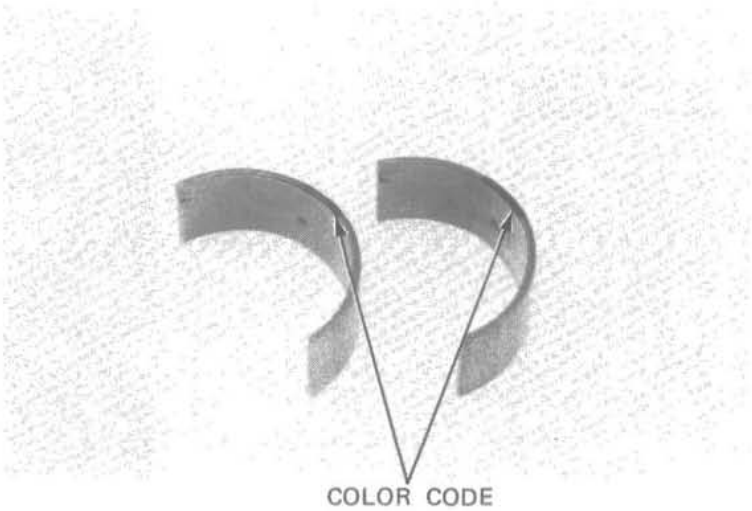

BEARING INSERT THICKNESS:

A (Blue): 1.502–1.506 mm (0.0591–0.0593 in)
B (Black): 1.498–1.502 mm (0.0590–0.0591 in)
C (Brown): 1.494–1.498 mm (0.0588–0.0590 in)
D (Green): 1.490–1.494 mm (0.0587–0.0588 in)
E (Yellow): 1.486–1.490 mm (0.0585–0.0587 in)

Date of Issue: January, 1982

MAIN BEARING

Determine and record crankcase I.D. code numbers.

NOTE:

> Letters (A, B or C) on the upper rear crankcase shown are the codes for the main journal I.D. from left to right. For example the I.D. code for the center main journal is C.

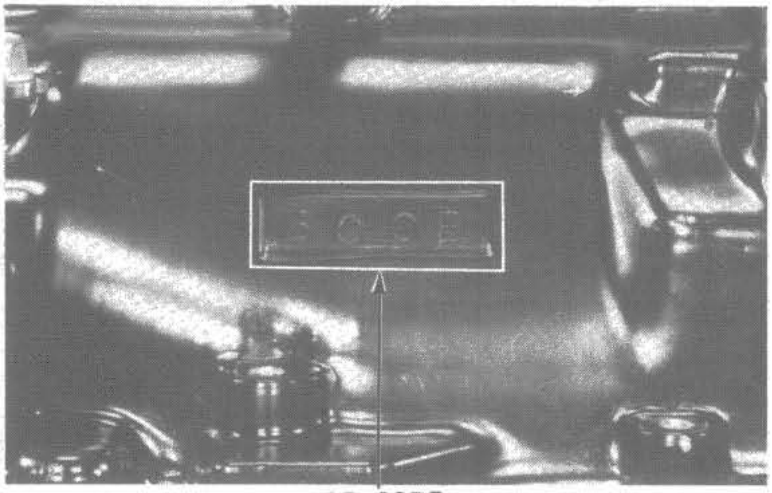

I.D. CODE

Determine and record the corresponding main journal O.D. code numbers (or measure the main journal O.D.).

NOTE:

> A number 1, 2 or 3 on each crank weight is the code for the adjacent main journal O.D.

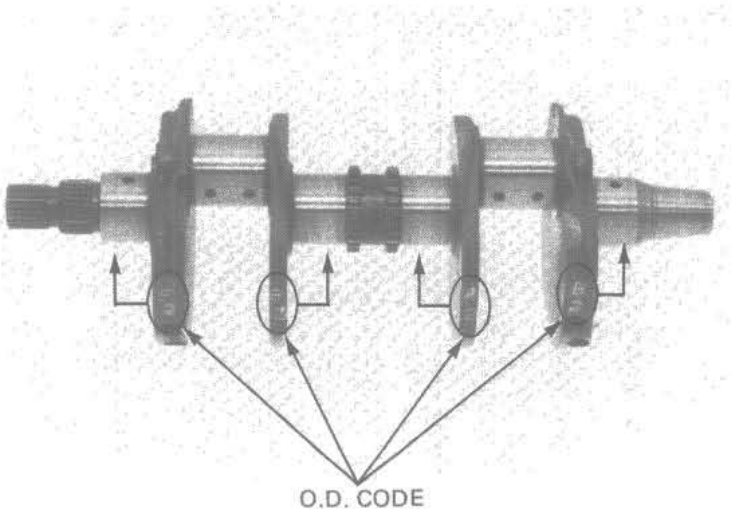

O.D. CODE

Cross reference the case and journal codes to determine the replacement bearing.

			MAIN JOURNAL O.D. CODE NO.		
			1	2	3
			35.992–36.000 mm	35.984–35.992 mm	35.976–35.984 mm
CASE I.D. CODE NO.	A	39.000–39.008 mm	E (Yellow)	D (Green)	C (Brown)
	B	39.008–39.016 mm	D (Green)	C (Brown)	B (Black)
	C	39.016–39.024 mm	C (Brown)	B (Black)	A (Blue)

MAIN BEARING INSERT THICKNESS:

A (Blue): 1.506–1.510 mm (0.0593–0.0594 in)
B (Black): 1.502–1.506 mm (0.0591–0.0593 in)
C (Brown): 1.498–1.502 mm (0.0590–0.0591 in)
D (Green): 1.494–1.498 mm (0.0588–0.0590 in)
E (Yellow): 1.490–1.494 mm (0.0587–0.0588 in)

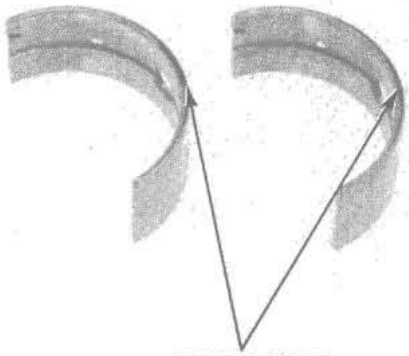

COLOR CODE

CRANKSHAFT INSTALLATION

Install the main bearings into the upper crankcase. Apply molybdenum disulfide grease to the upper and lower main bearings.
Install the crankshaft with the cam chain.

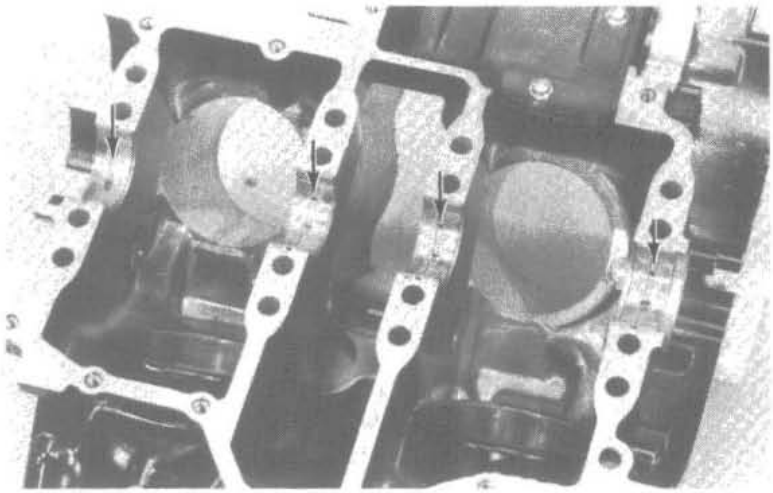

PISTON AND ROD INSTALLATION

Clean the piston domes, ring lands, and skirts.
Carefully install the piston rings onto the piston. Stagger the ring end gaps as shown.

NOTE:

- Be careful not to damage the piston and piston rings during assembly.
- All rings should be installed with the markings facing up.
- After installing the rings they should rotate freely, without sticking.

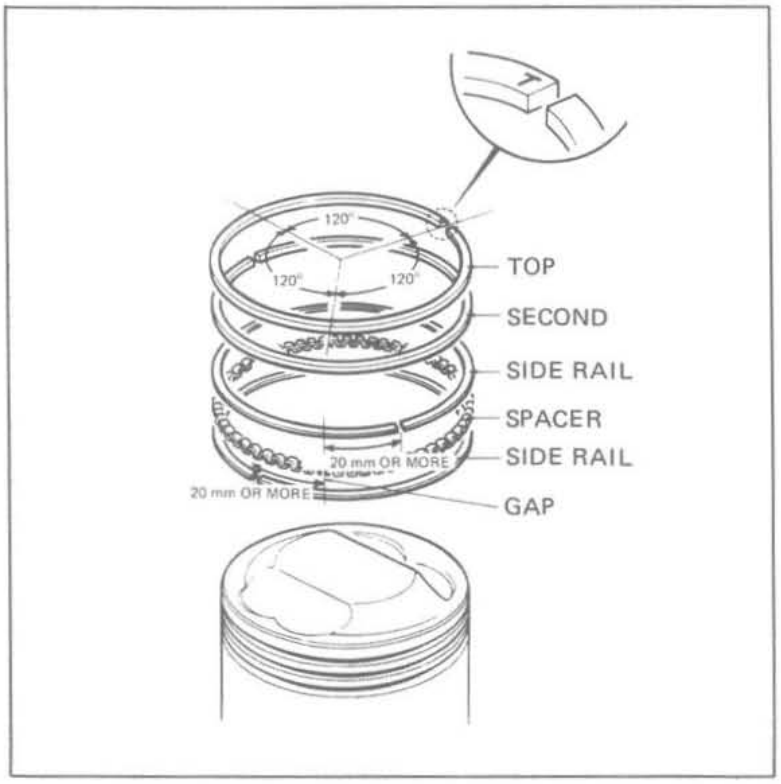

Date of Issue: October, 1982

Coat the rod small end with molybdenum disulfide grease.
Assemble the pistons and connecting rods with the pistons and piston clips as follows.

Front cylinder connecting rod and piston assembly.

Note that the front cylinder connecting rods are marked MBO "F".
Install the pistons on the front connecting rods so that the intake "IN" mark is facing opposite the oil hole in the rod.

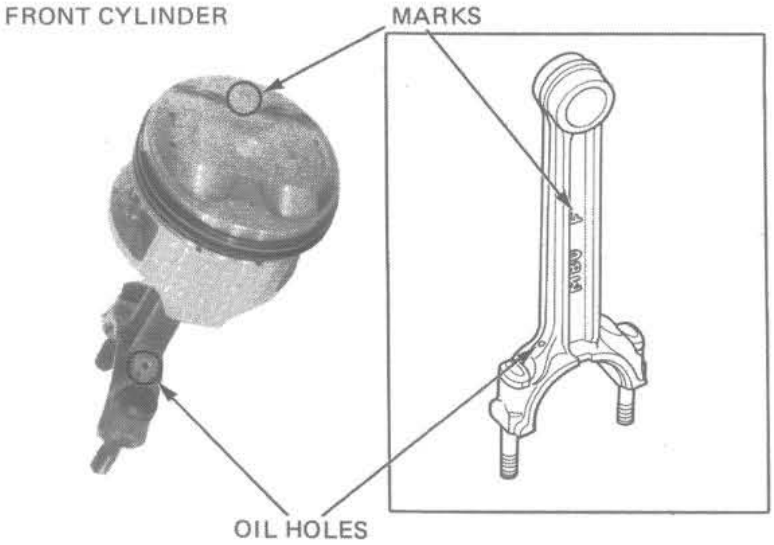

Rear cylinder connecting rod and piston assembly.

Note that the rear cylinder connecting rods are marked MBO "R".
Install the pistons on the rear rods so that the intake "IN" mark is facing the same direction as the oil hole in the rod.

NOTE:

- Do not interchange the pistons, piston pins or connecting rods.
- Make sure that the piston pin clips are properly seated.

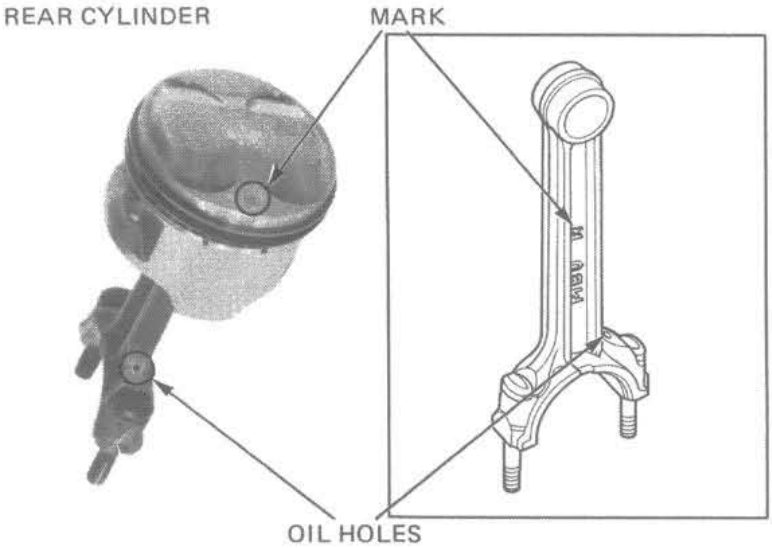

Align the hole in the connecting rod bearing insert with the hole in the connecting rod and install the insert.

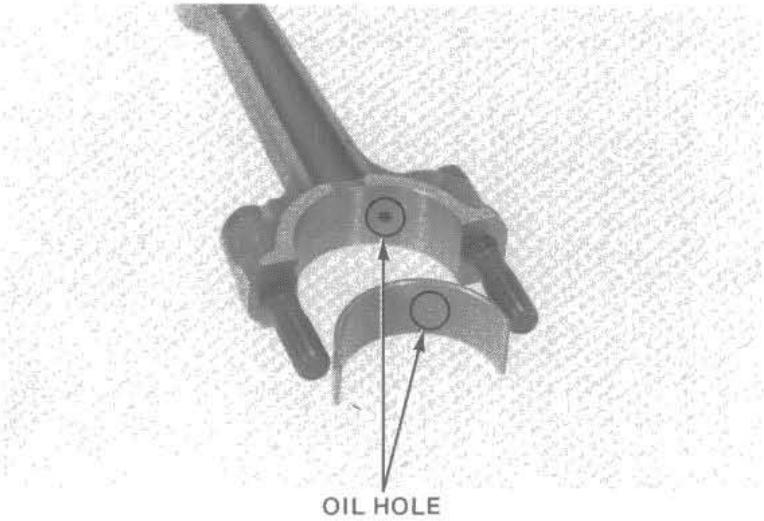

Install the connecting rod cap bearing insert.
Apply molygdenum disulfide grease to the connecting rod bearings.

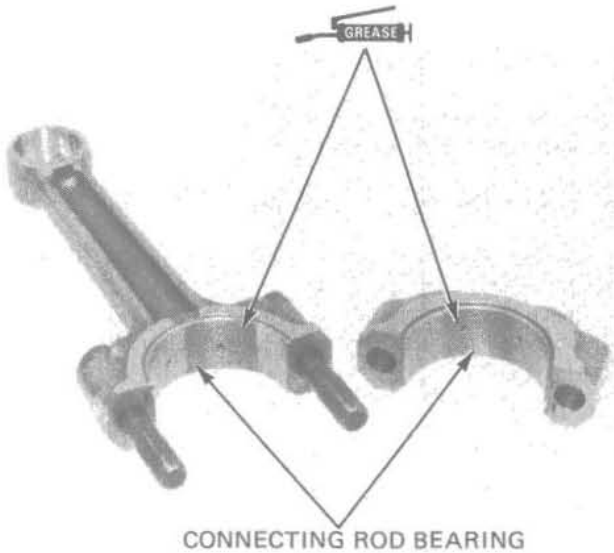

CONNECTING ROD BEARING

Coat the cylinders, piston rings/grooves and pistons with oil.
Install the rod and piston assemblies into the cylinders from the top of the crankcase. Be sure each assembly is returned to its original position as noted during removal.

NOTE:

> The piston intake "IN" marks should be facing each other as shown.

"IN" MARKS

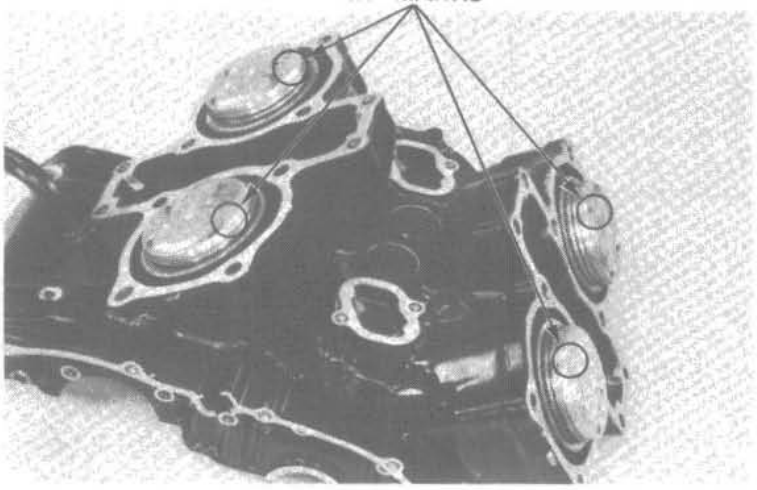

Compress the piston rings with a ring compressor and insert the piston and rod into the cylinder.

NOTE:

> - Be careful not to damage the pistons or rings during assembly.
> - To prevent damaging the crankshaft, slip short sections of rubber hose over the rod bolts before installation.

PISTON RING COMPRESSOR
(Commercially available)

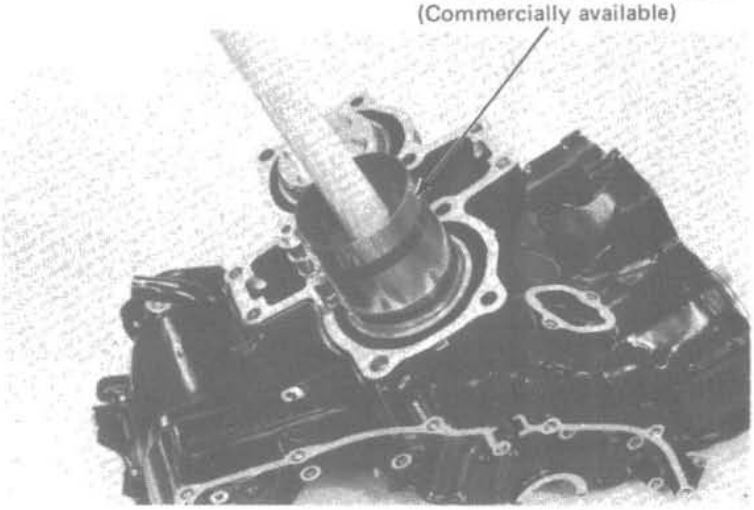

Date of Issue: May, 1982

Install and torque the connecting rod caps.

TORQUE: 30–34 N·m (3.0–3.4 kg-m, 22–25 ft-lb)

NOTE:

- Be sure the bearing caps are installed in their correct location as marked during removal.
- Tighten the nuts in two or more steps.
- After tightening the bolts, check that the rods move freely without binding.

Assemble the crankcase (See page 11-13).

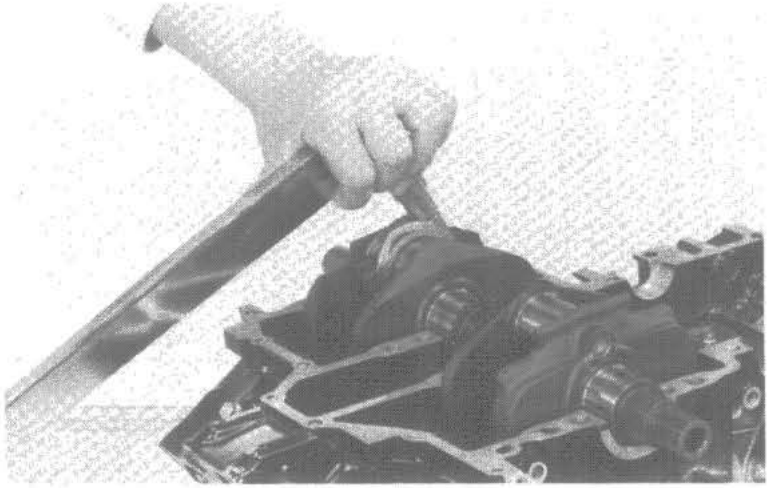

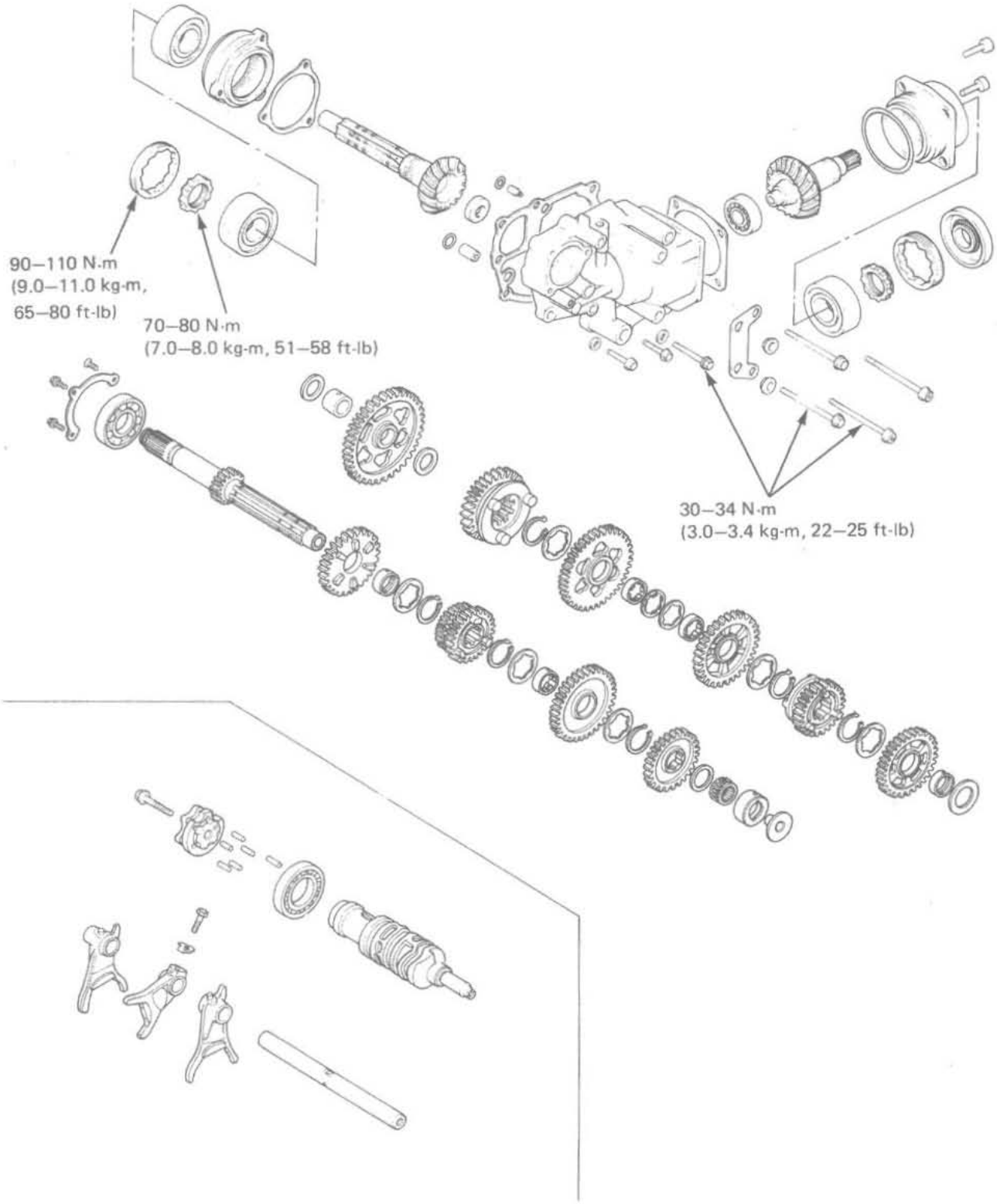

Date of Issue: May, 1982

13. TRANSMISSION

SERVICE INFORMATION

GENERAL

- The gearshaft linkage can be serviced with the engine in the frame (Section 8).
- For internal transmission repairs, the crankcase must be separated (Section 11).
- Replace the countershaft and output driven gear as a set.
- When using the lock nut wrench, use a deflecting beam type torque wrench 14-20 inches long. The lock nut wrench increases the torque wrenche's leverage, so the torque wrench reading will be less than the torque actually applied to the lock nut. The specification given is the actual torque applied to the lock nut, not the reading on the torque wrench when used with the lock nut wrench. The torque wrench scale reading is given with the actual torque specification.

13

SPECIFICATIONS

			STANDARD	SERVICE LIMIT
Transmission	Backlash	low	0.089–0.170 mm (0.0035–0.066 in)	0.24 mm (0.009 in)
		2nd, 3rd, 4th, 5th, 6th	0.068–0.136 mm (0.0027–0.0054 in)	0.18 mm (0.007 in)
	Gear I.D.	M5, M6, C2, C3 gear	28.000–28.021 mm (1.1024–1.1032 in)	28.04 mm (1.104 in)
		C1 gear	24.000–24.021 mm (0.9449–0.9457 in)	24.04 mm (0.946 in)
		C4 gear	29.000–29.021 mm (1.1417–1.1426 in)	29.04 mm (1.143 in)
	Gear bushing O.D.	M5, M6, C2, C3	27.959–27.980 mm (1.1007–1.1016 in)	27.94 mm (1.100 in)
		M6	27.959–27.980 mm (1.1007–1.1016 in)	27.94 mm (1.100 in)
		C1	23.959–23.980 mm (0.9433–0.9441 in)	23.94 mm (0.943 in)
		C4	28.959–28.980 mm (1.1401–1.1409 in)	28.94 mm (1.139 in)
	Gear bushing I.D.	M5	24.985–25.006 mm (0.9837–0.9845 in)	25.04 mm (0.986 in)
		C1	20.160–20.370 mm (0.7937–0.8019 in)	20.40 mm (0.803 in)
		C4	24.985–25.006 mm (0.9837–0.9845 in)	25.04 mm (0.986 in)
	Mainshaft O.D.	at M5	24.959–24.980 mm (0.9826–0.9835 in)	24.90 mm (0.980 in)
	Countershaft O.D.	at C1	19.980–19.993 mm (0.7866–0.7871 in)	19.93 mm (0.785 in)
		at C4	24.959–24.980 mm (0.9826–0.9835 in)	24.90 mm (0.980 in)
	Gear-to-bushing or shaft clearance	M5, 6 to M5, 6 bushing	0.020–0.062 mm (0.0008–0.0024 in)	0.10 mm (0.004 in)
		M5 bushing to shaft	0.005–0.047 mm (0.0002–0.0019 in)	0.06 mm (0.002 in)

			STANDARD	SERVICE LIMIT
Transmission	Gear to-bushing or shaft clearance	C1 to C1 bushing	0.020–0.062 mm (0.0008–0.0024 in)	0.10 mm (0.004 in)
		C1 bushing to shaft	0.167–0.390 mm (0.0066–0.0154 in)	0.10 mm (0.004 in)
		C2 to bushing	0.020–0.062 mm (0.0008–0.0024 in)	0.10 mm (0.004 in)
		C3 to bushing	0.020–0.062 mm (0.0008–0.0024 in)	0.10 mm (0.004 in)
		C4 to bushing	0.020–0.062 mm (0.0008–0.0024 in)	0.10 mm (0.004 in)
		C4 bushing to shaft	0.005–0.047 mm (0.0002–0.0019 in)	0.06 mm (0.002 in)
Shift fork	Claw thickness		6.43–6.50 mm (0.253–0.256 in)	6.1 mm (0.24 in)
	I.D.	Left and right	14.000–14.018 mm (0.5511–0.5519 in)	14.04 mm (0.553 in)
Fork shaft	O.D.		13.966–13.984 mm (0.5498–0.5505 in)	13.90 mm (0.547 in)

TORQUE VALUES:

Output gear case bearing holder	30–34 N·m (3.0–3.4 kg-m, 22–25 ft-lb)
Output gear case 8 mm	21–25 N·m (2.1–2.5 kg-m, 14–18 ft-lb)
6 mm	10–14 N·m (1.0–1.4 kg-m, 7–10 ft-lb)
Output gear bearing lock nut (outer)	90–110 N·m (9.0–11.0 kg-m, 65–80 ft-lb)
(inner)	70–80 N·m (7.0–8.0 kg-m, 51–58 ft-lb)

TOOLS:

Special

Lock nut wrench, 30/64 mm	07916–MB00000
Preload inspection tool	07998–4150000
Shaft holder	07923–6890101
Ring gear dis/assembly tool	07965–3710100
Race driver attachment	07945–3330300
Bearing remover, 17 mm	07936–3710300
Remover handle	07936–3710100
Remover weight	07936–3710200

Common

Driver	07749–0010000
Pilot, 30 mm	07746–0040700
Attachment, 52 x 55 mm	07746–0010400
Attachment, 42 x 47 mm	07746–0010300
Pilot, 17 mm	07746–0040400
Driver	07746–0030100 } or Driver: 07945–3710200
Attachment, 25 mm	07746–0030200 } or Driver: 07945–3710200

TROUBLESHOOTING

Hard to shift

1. Clutch slave cylinder sticking
2. Shift fork bent
3. Shift shaft bent
4. Shift claw bent
5. Shift drum cam grooves damaged

Transmission jumps out of gear

1. Gear dogs worn
2. Shift shaft bent
3. Shift drum stopper broken
4. Shift forks bent

Date of Issue: October, 1982

For servicing of the gearshift linkage, see Section 8.

TRANSMISSION DISASSEMBLY

Separate the crankcase (Section 11).
Remove the dowel pins from the crankcase.
Inspect the backlash of each gear.

SERVICE LIMIT:

Low:	**0.24 mm (0.009 in)**
2nd, 3rd, 4th, 5th, 6th:	**0.18 mm (0.007 in)**

Remove the mainshaft and countershaft.

Remove the output gear case.
If the thickness of the gasket is on it, measure it and record that measurement. Replace the gasket with one of the same thickness.
If you had to measure the old gasket, replace it with one that is 0.05 mm thicker to compensate for assembly crush (page 13-16).

Index the gear case countershaft bearing holder to the output gear case, for ease of reassembly.

NOTE:

> When removing the countershaft, pull the countershaft with remaining gears out of crankcase after removing the C1, C5, C2, C3 gears, spline washers and bushings in the crankcase.

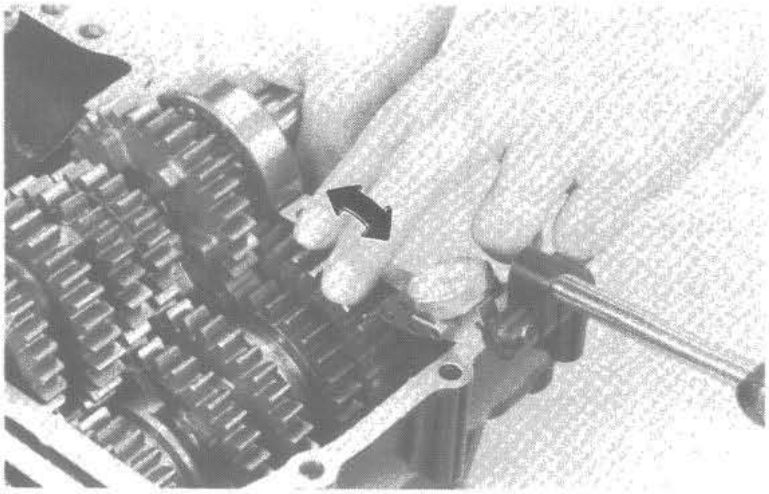

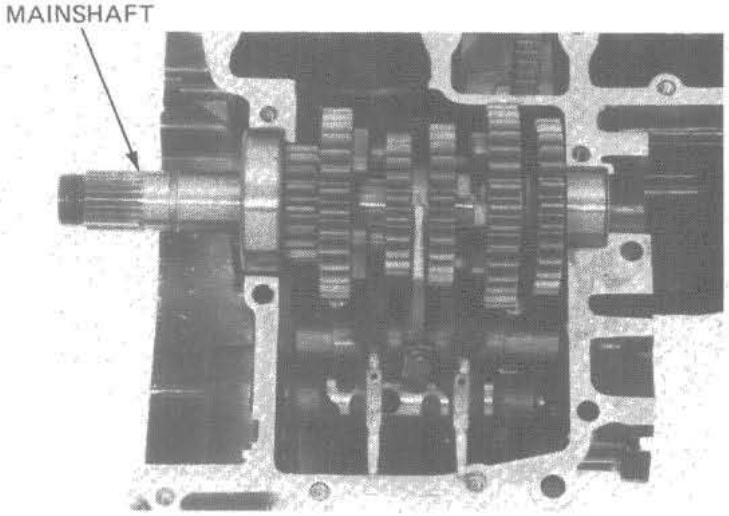

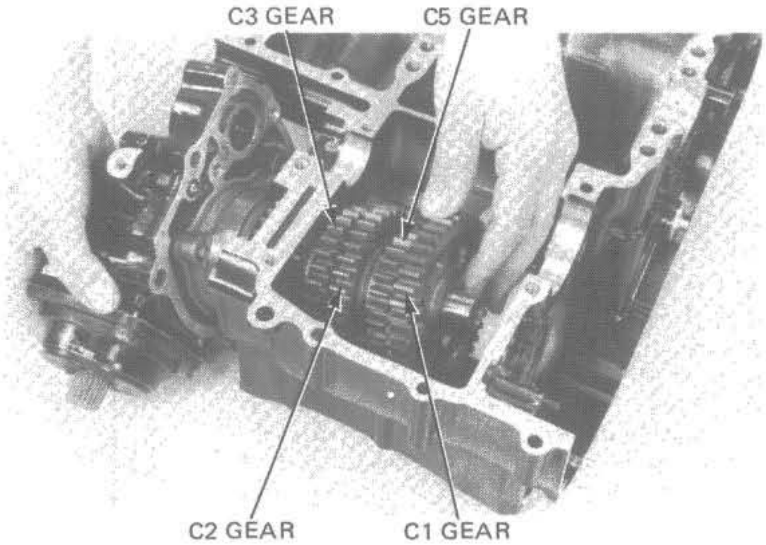

TRANSMISSION INSPECTION

Check gear dogs, dog holes and teeth for excessive or abnormal wear, or evidence of insufficient lubrication.

Measure the I.D. of each gear.

SERVICE LIMITS:

M5 gear:	28.04 mm (1.104 in)
M6 gear:	28.04 mm (1.104 in)
C1 gear:	24.04 mm (0.946 in)
C2 gear:	28.04 mm (1.104 in)
C3 gear:	28.04 mm (1.104 in)
C4 gear:	29.04 mm (1.143 in)

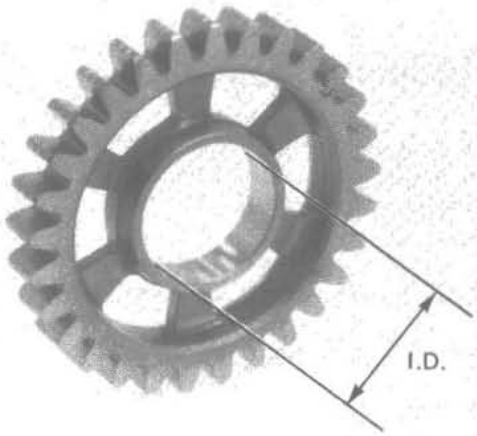

Measure the I.D. and O.D. of the gear bushings.

SERVICE LIMITS:

M5 O.D.:	27.94 mm (1.100 in)
M6 O.D.:	27.94 mm (1.100 in)
C1 O.D.:	23.94 mm (0.943 in)
C2 O.D.:	27.94 mm (1.100 in)
C3 O.D.:	27.94 mm (1.100 in)
C4 O.D.:	28.94 mm (1.139 in)
M5 I.D.:	25.04 mm (0.986 in)
C1 I.D.:	20.40 mm (0.803 in)
C4 I.D.:	25.04 mm (0.986 in)

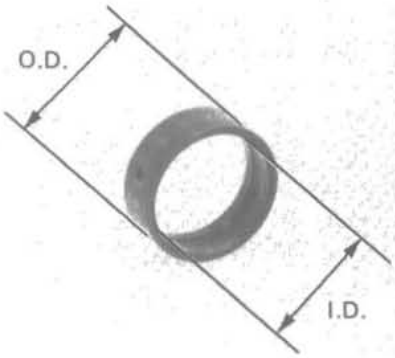

Measure the O.D. of the mainshaft and countershaft.

SERVICE LIMITS:

A (at M5 bushing):	24.90 mm (0.980 in)
B (at C1 bushing):	19.93 mm (0.785 in)
C (at C4 bushing):	24.90 mm (0.980 in)

Calculate the clearance between the gear and gear shaft or bushing.

SERVICE LIMITS:

M5, 6 gear to M5, 6 bushing:	0.10 mm (0.004 in)
M5 bushing to M5 shaft:	0.06 mm (0.002 in)
M6 gear to M6 bushing:	0.10 mm (0.004 in)
C1 gear to C1 bushing:	0.10 mm (0.004 in)
C1 bushing to C1 shaft:	0.10 mm (0.004 in)
C2 gear to C2 bushing:	0.10 mm (0.004 in)
C3 gear to C3 bushing:	0.10 mm (0.004 in)
C4 gear to C4 bushing:	0.10 mm (0.004 in)
C4 bushing to C4 shaft:	0.06 mm (0.002 in)

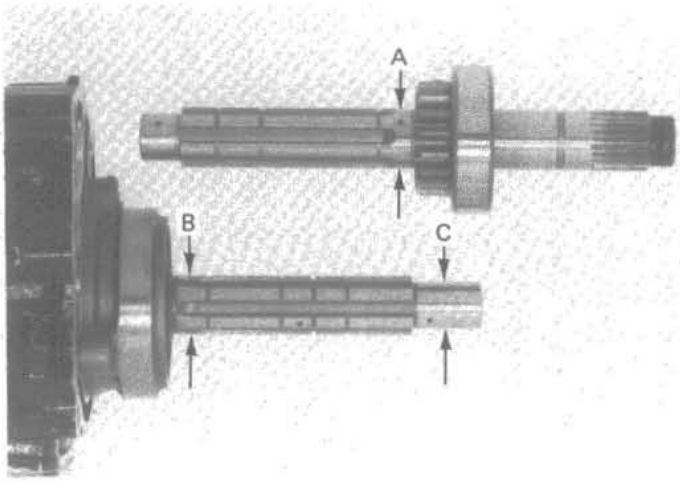

Date of Issue: May, 1982

DRIVE GEAR REMOVAL

Remove the dowel pin and O-rings.

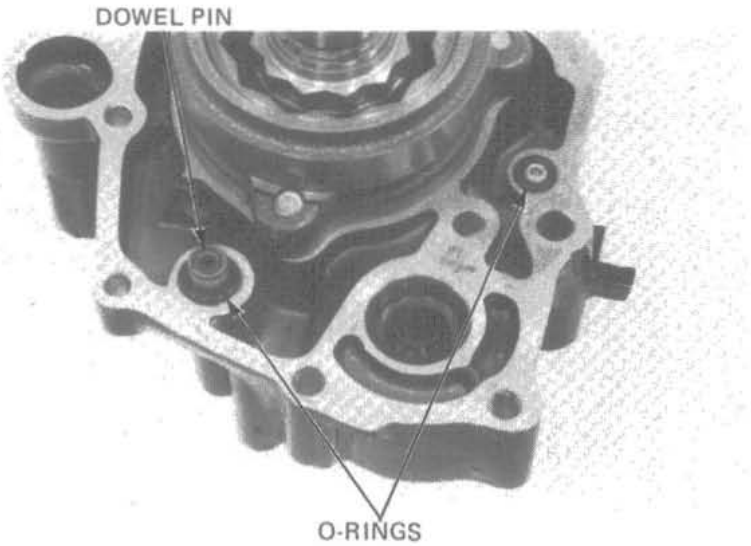

Place the output gear case in a vise with soft jaws, being careful not to distort it.

Place the shaft holder tool on the output driven gear shaft wedging it against the vise to lock the shaft.

Unstake the inner bearing race lock nut with a drill or grinder. Be careful that metal particles do not enter the bearing and the threads on the shaft are not damaged.

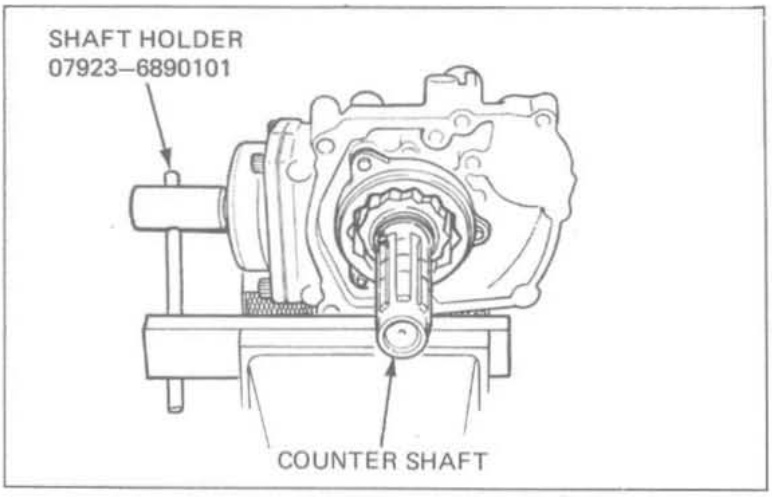

Remove the inner bearing race lock nut.
Discard the nuts.

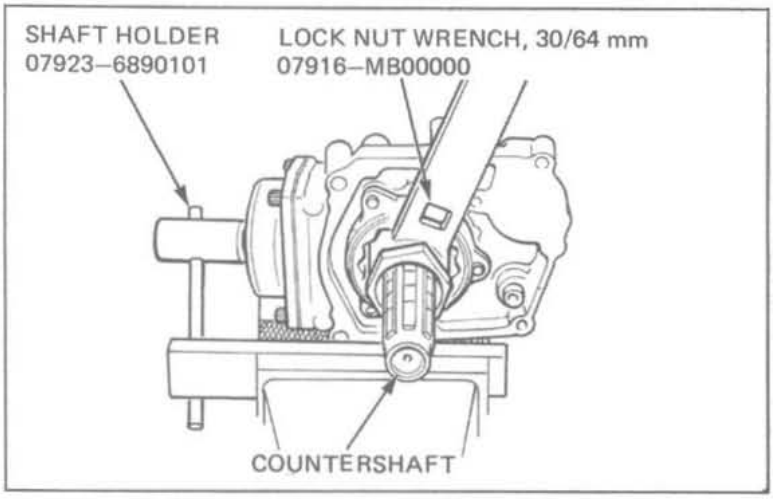

Remove the countershaft bearing holder bolts and holder from the case.

Remove the output drive gear and shim.

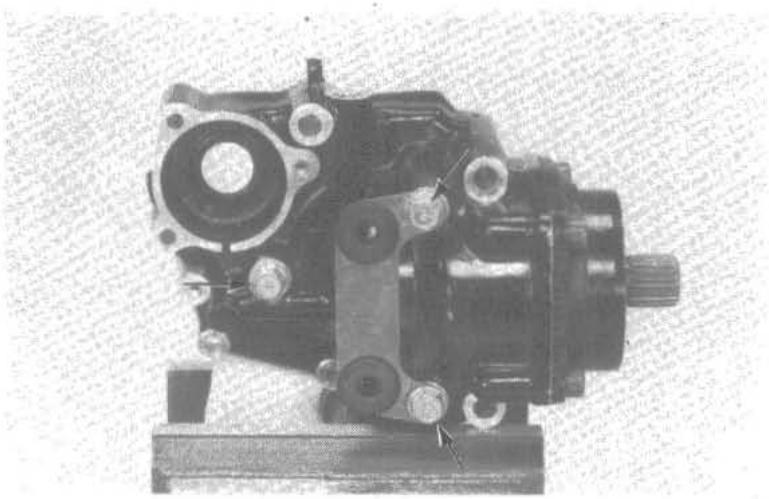

Place the countershaft/holder and a disassembly tool in a press.

Press the countershaft out of the bearing holder.

NOTE:

> Remove the center guide from the dis/assembly tool before using it.

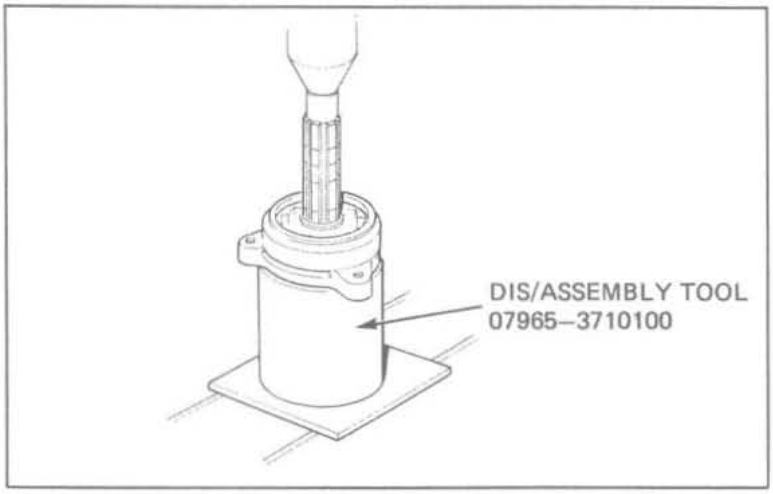

COUNTERSHAFT BEARING REPLACEMENT

NOTE:

> Countershaft must be removed before replacing bearing.

Place the bearing holder in a vise with soft jaws or shop towel.

NOTE:

> Do not damage the bearing holder, especially mating surface with the crankcase.

Unstake the outer race lock nut with a punch.

Remove the bearing outer race lock nut with a special tool. Discard the lock nut.

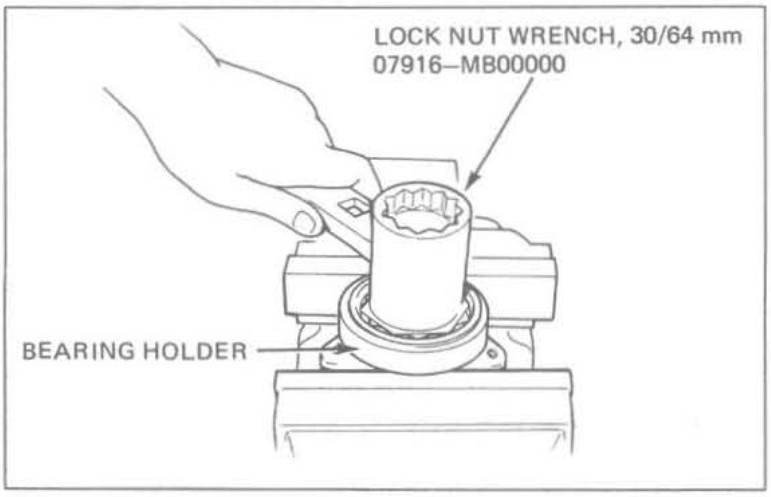

Date of Issue: May, 1982

Place the bearing holder in a press and remove the bearing.

Press in a new bearing.

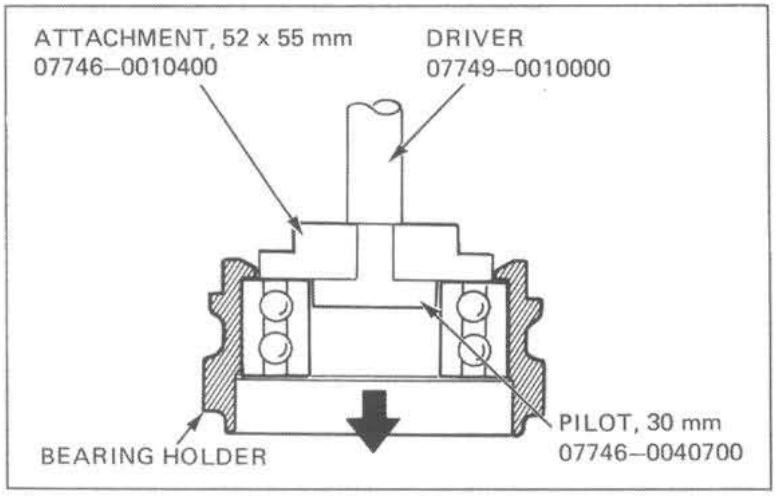

Place the bearing holder in a vise with soft jaws and install and tighten a new outer race lock nut to the specified torque value.

TORQUE: 90–110 N·m
(9.0–11.0 kg-m, 65–80 ft-lb)

Torque wrench scale reading:
80–100 N·m (8.0–10.0 kg-m, 58–73 ft-lb)

Then stake the new nut.

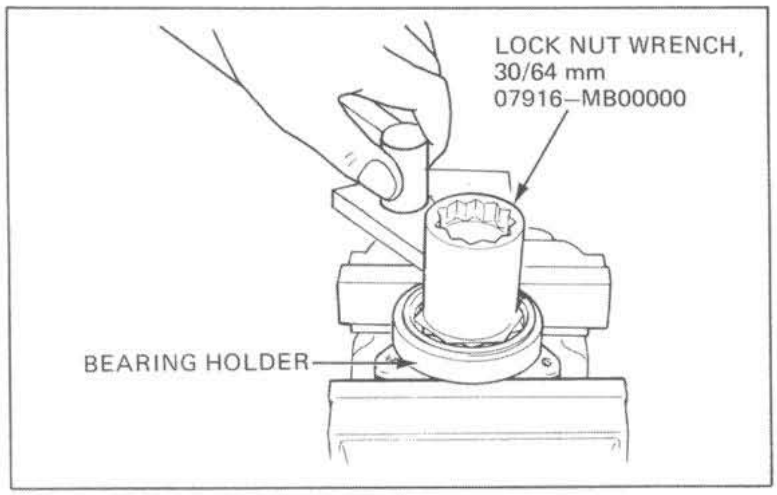

COUNTERSHAFT INSTALLATION

NOTE:

> The countershaft and driven gear must be replaced as a set if they or the gear case or bearing require replacement.

Place the countershaft and countershaft bearing holder into a press. Press the countershaft into the bearing.

NOTE:

> Place the pilot threaded end into the countershaft.

Place the adjustment shim over the bearing holder.

NOTE:

> If the countershaft/driven gear, bearing or gear case are replaced, a new adjustment shim must be selected (page 13-15, Backlash Inspection).

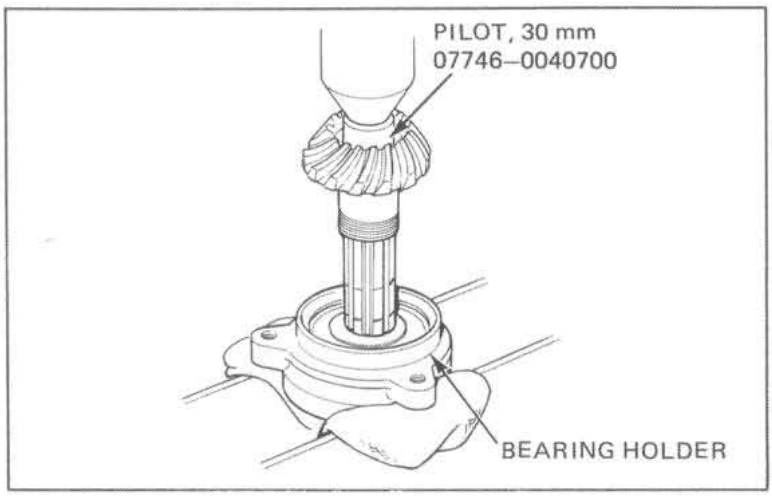

Place the countershaft/bearing holder and correct shim into the output gear case.
Install the bolts and sealing washers with the cover bracket.
Tighten the bolts in a crisscross pattern until the drive gear bearing holder seats against the case. Then tighten to the specified torque.

TORQUE: 30–34 N·m (3.0–3.4 kg-m, 22–25 ft-lb)

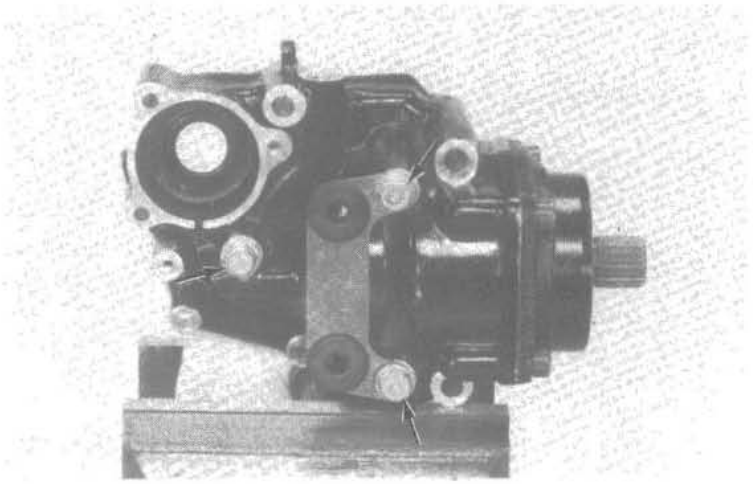

Place the case into a vise with soft jaws.

Install and tighten a new countershaft nut to the specified torque.

TORQUE: 70–80 N·m (7.0–8.0 kg-m, 51–58 ft-lb)

Torque wrench scale reading:
64–73 N·m (6.4–7.3 kg-m, 46–53 ft-lb)

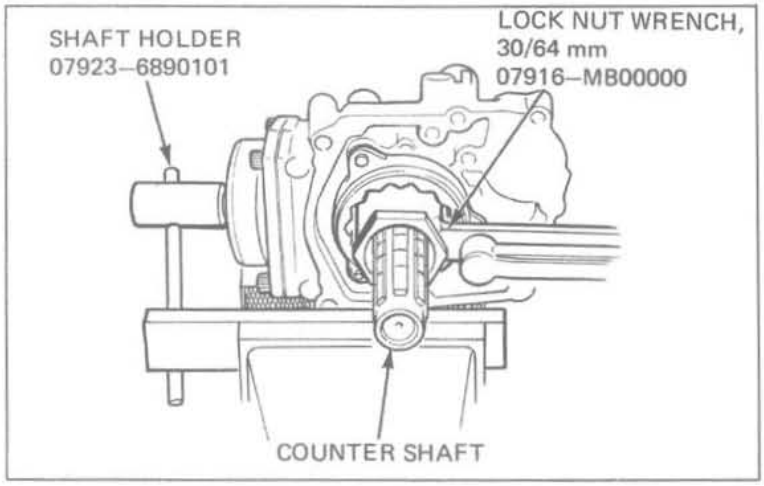

Stake the lock nut.

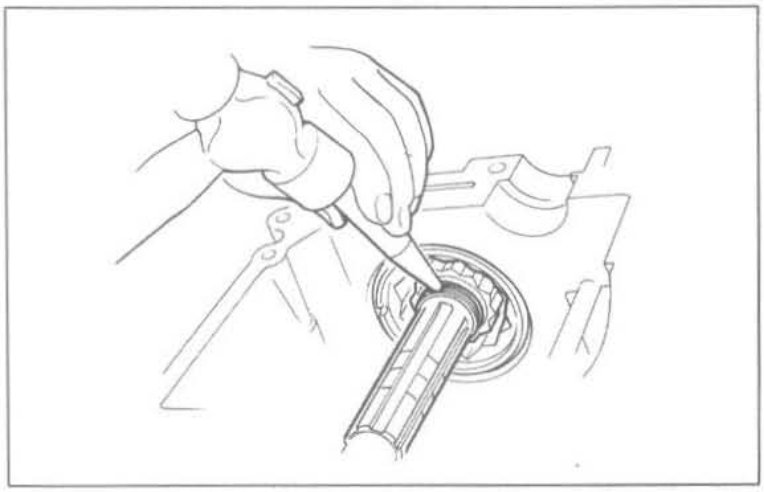

Date of Issue: October, 1982

OUTPUT DRIVEN GEAR REMOVAL

Remove the output driven gear oil seal from the output gear case.
Place the output gear case into a vise, clamping it at the shift shaft spindle boss.

Unstake and loosen the output driven gear bearing inner race lock nut.

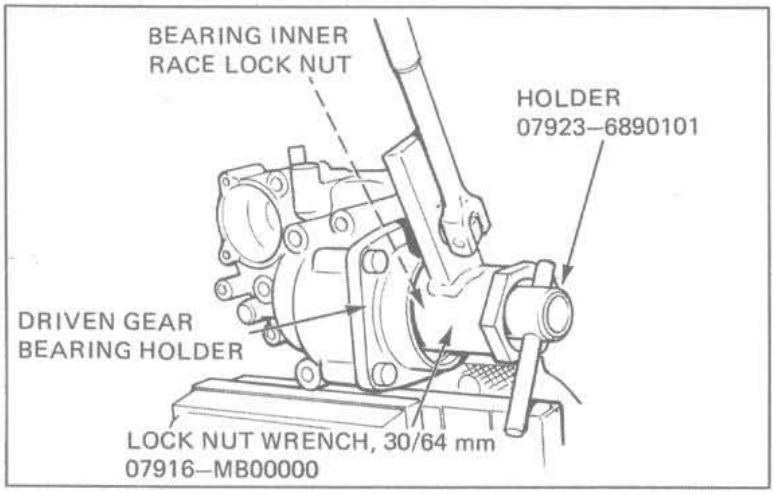

Remove the driven gear bearing holder mounting bolts and remove the gear and holder from the case.

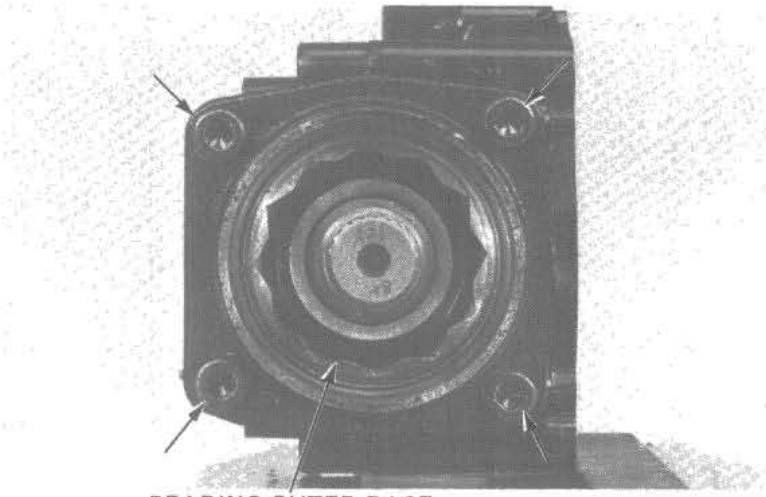

Remove the shim and O-ring from the bearing holder.

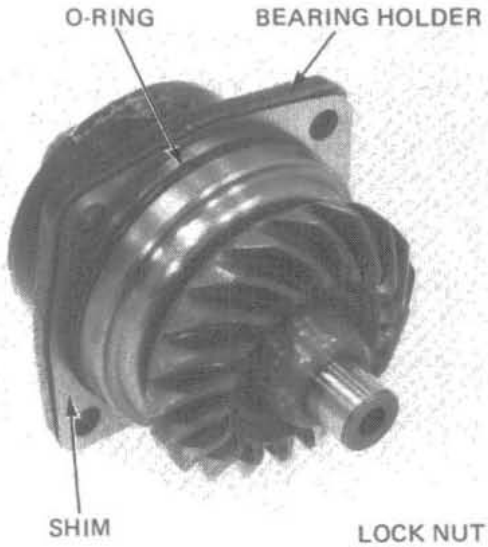

OUTPUT DRIVEN GEAR BEARING REPLACEMENT

Remove the output driven gear oil seal from the output gear case.

Place the output driven gear bearing holder into a vise with soft jaws. Unstake and remove the output driven gear bearing outer race lock nut from the holder.

Press the output driven gear from the holder.

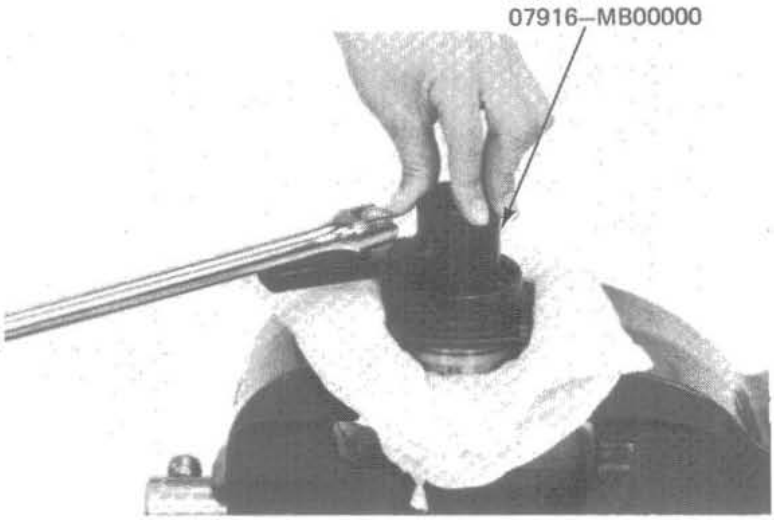

Place the bearing holder in a press and press the bearing out.

NOTE:

> Be careful not to damage the bearing holder gear case mating surface.

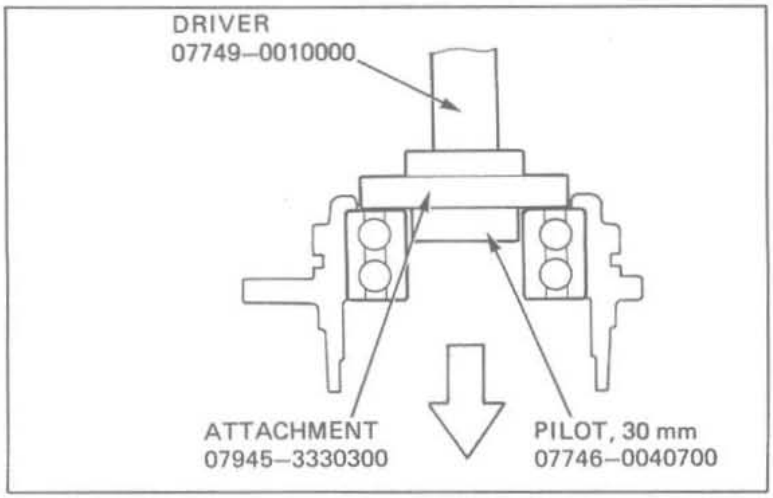

Press in a new bearing and make sure it rotates freely.

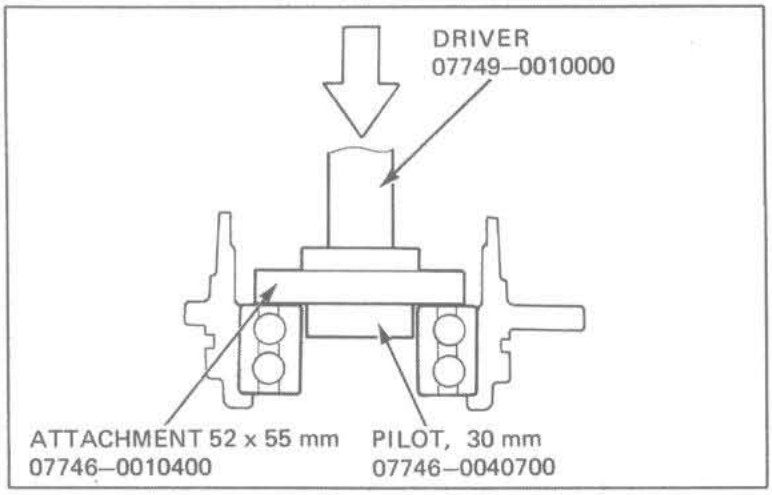

Place the bearing holder into a vise with soft jaws. Install and tighten a new bearing outer race lock nut to the specified torque value.

TORQUE: 90–110 N·m (9.0–11.0 kg-m, 65–80 ft-lb)

Torque wrench scale reading: 80–110 N·m (8.0–10.0 kg-m, 58–72 ft-lb)

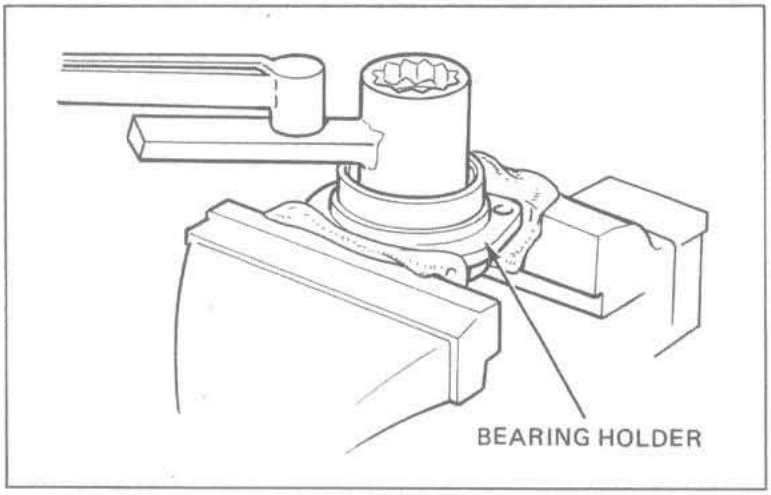

OUTPUT DRIVEN GEAR INSTALLATION

NOTE:

- Remove the center guide from the dis/assembly tool before using.
- When the gear set, driven gear bearing and/or gear case has been replaced, use a shim 0.30 mm (0.012 in) thick for initial reference.

Place the output driven gear bearing holder into a press.
Then press in the output driven gear.
Install the o-ring and correct shim.

Attach the bearing holder onto the gear case with the four hex bolts. Tighten the bolts in a crisscross pattern in two or more steps.

TORQUE: 30–34 N·m (3.0–3.4 kg-m, 22–25 ft-lb)

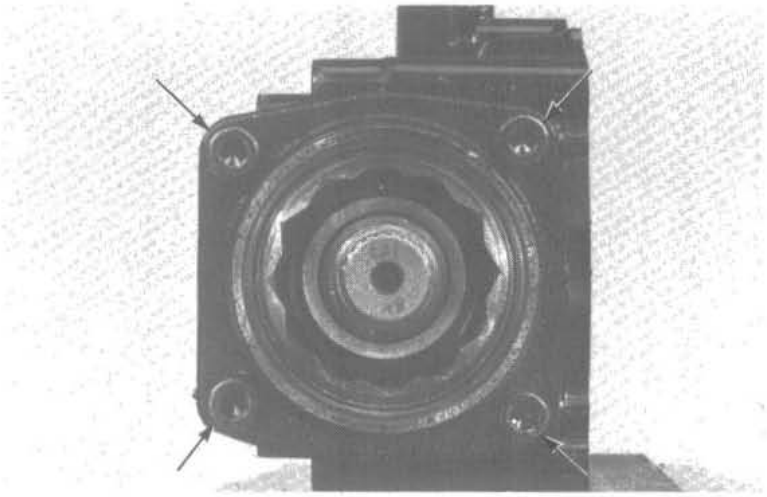

Install a new bearing inner race lock nut and tighten it to the specified torque.

TORQUE: 70–80 N·m (7.0–8.0 kg-m, 51–58 ft-lb)

Torque wrench scale reading:
64–73 N·m (6.4–7.3 kg-m, 46–53 ft-lb)

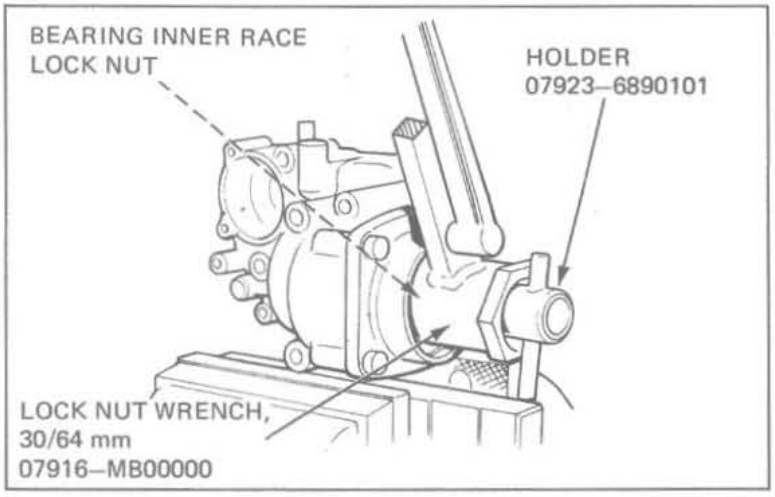

Stake both new lock nuts and install a new oil seal.

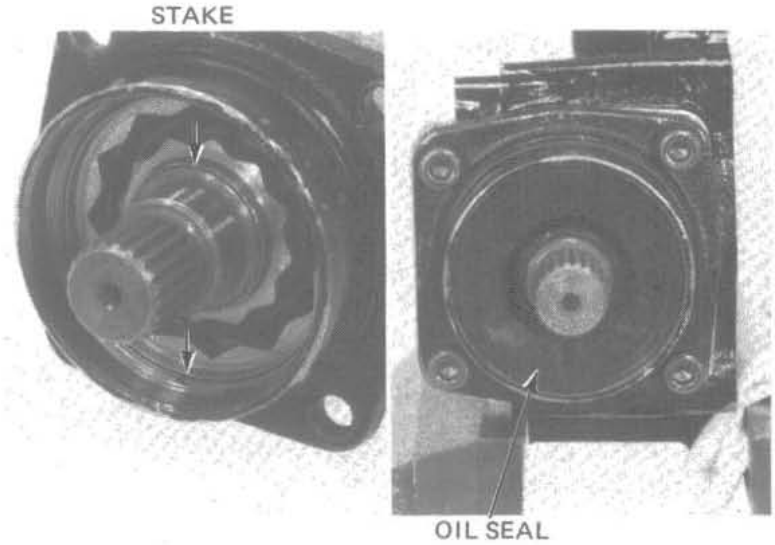

Date of Issue: October, 1982

OUTPUT DRIVEN GEAR CASE BEARING REPLACEMENT

Heat the output gear case around the bearing to 80°C (176°F).

CAUTION:

Always wear gloves when handling a heated gear case.

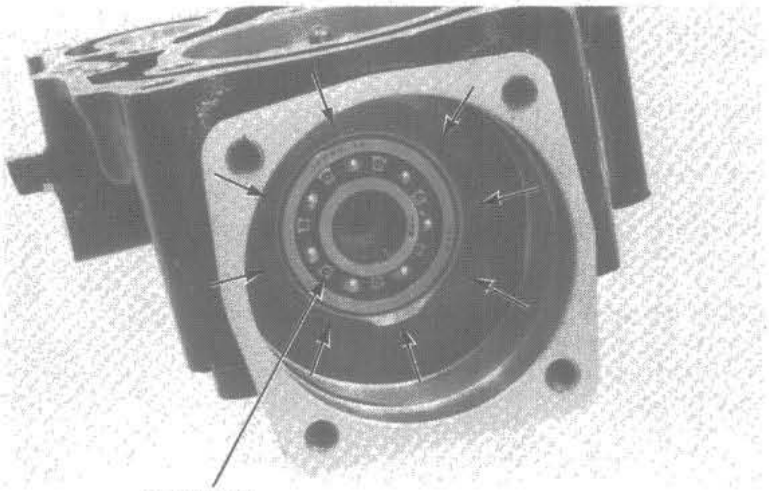

Remove the bearing with the bearing remover.

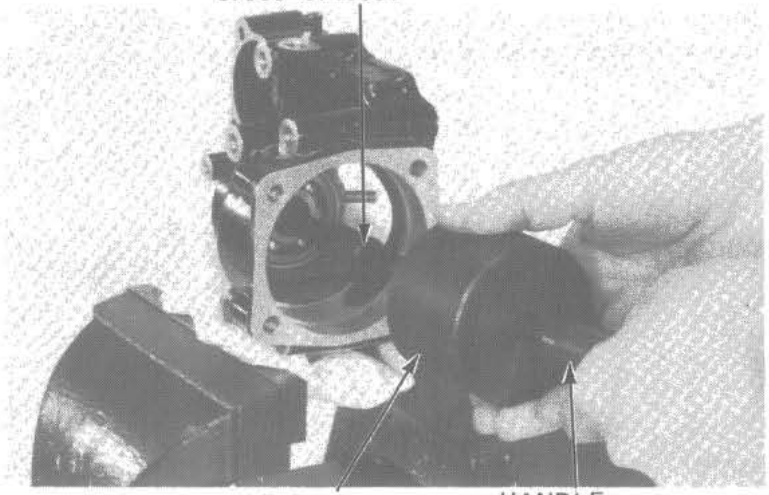

Drive a new bearing into the output gear case.

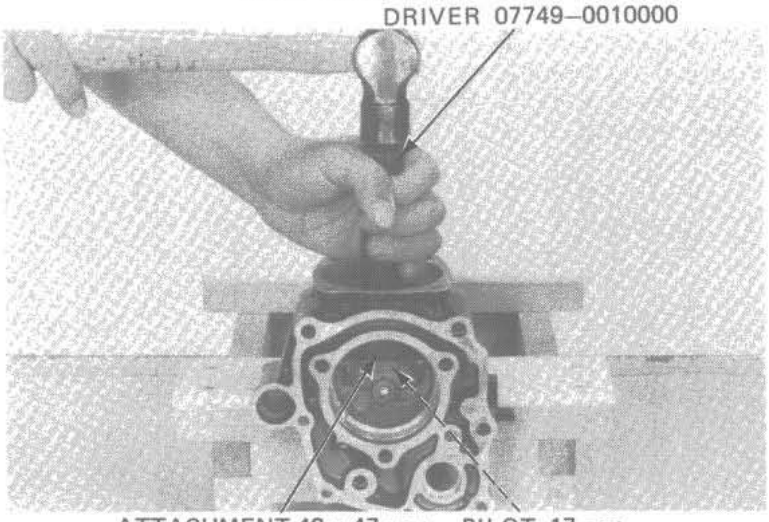

GEAR TOOTH CONTACT PATTERN CHECK

Remove the drive and driven gears (pages 13-5, 13-8).
Apply Prussian Blue to the driven gear teeth.

Install the drive and driven gears with the standard shims.

Rotate the drive gear several times in the normal direction of rotation.
Check the gear tooth contact pattern after removing the drive gear.

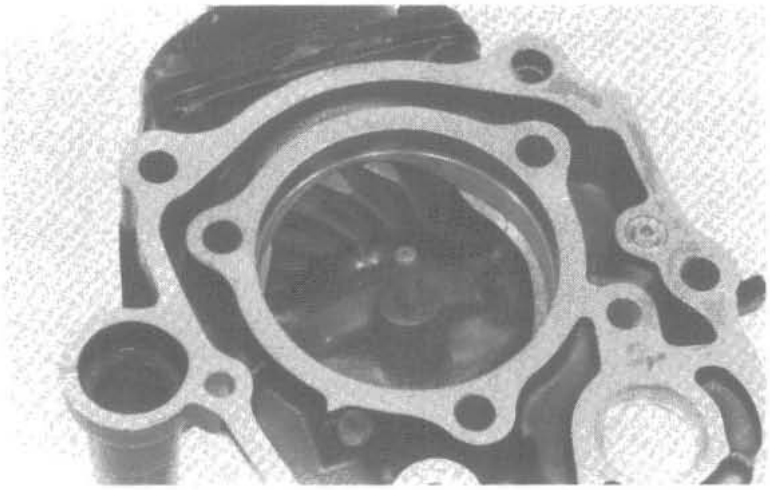

Contact is normal if Prusian Blue in transfered to the approximate center of each tooth and slightly to the side.

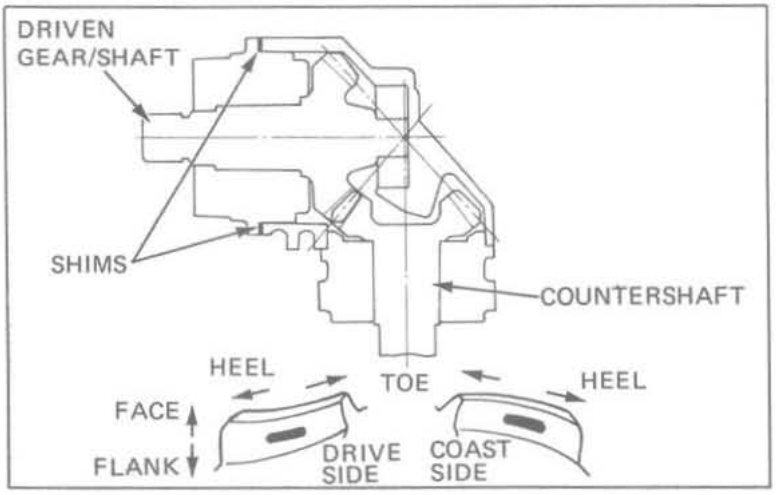

If the pattern is not correct, remove and replace the driven gear adjustment shim.
Replace the shim with a thinner one if the contact pattern is too high.

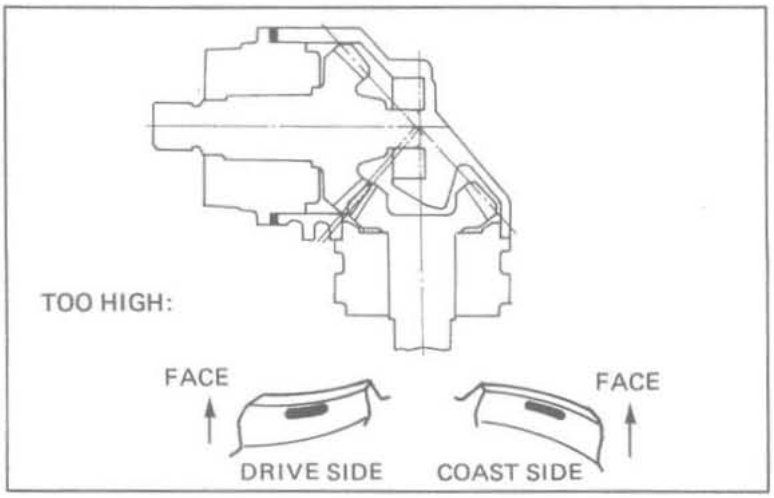

Date of Issue: May, 1982

Replace the driven gear adjustment shim with a thicker one if the contact is too low.

The pattern will shift about 1.5–2.0 mm (0.06–0.08 in) when the thickenss of the shim is changed by 0.10 mm (0.04 in).

OUTPUT DRIVEN GEAR ADJUSTMENT SHIM:

A: 0.04 mm (0.002 in)
B: 0.20 mm (0.008 in)
C: 0.25 mm (0.010 in)
D: 0.30 mm (0.012 in) STANDARD
E: 0.35 mm (0.014 in)
F: 0.40 mm (0.016 in)

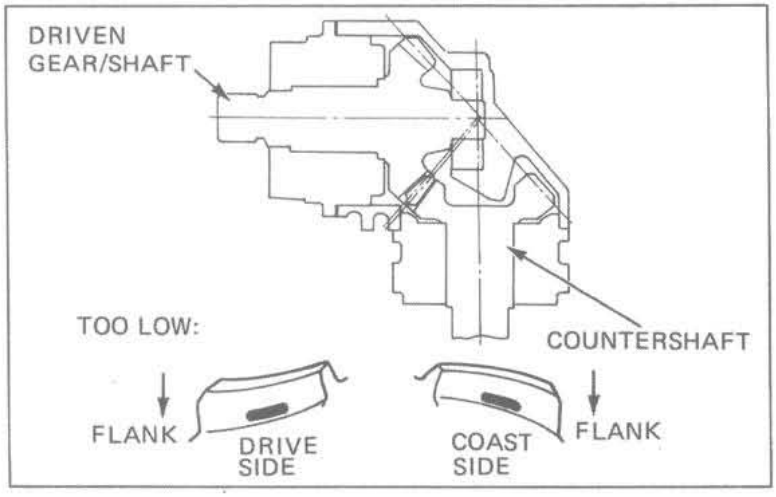

BACKLASH INSPECTION

Place the output gear case in a vise with soft jaws or a shop towel.

Set a horizontal type dial indicator on the countershaft as shown.
Hold the driven gear with the shaft holder and rotate the countershaft by hand until gear slack is taken up.

Turn the countershaft back and forth to read backlash.

STANDARD: 0.08–0.23 mm (0.003–0.009 in)
SERVICE LIMIT: 0.40 mm (0.016 in)

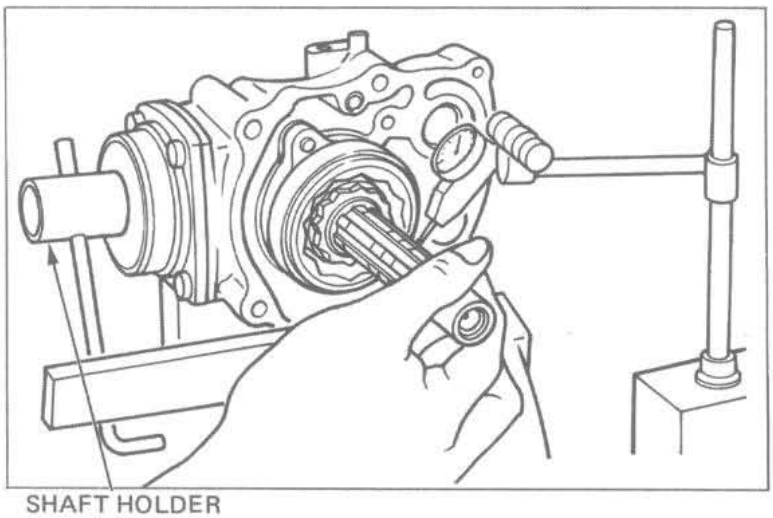

Remove the dial indicator. Turn the countershaft 120° and measure backlash. Repeat this procedure once more.
Compare the difference of the three measurements.

DIFFERENCE OF MEASUREMENT
SERVICE LIMIT: 0.10 mm (0.004 in)

If the difference in measurements exceeds the limit, it indicates that the bearing is not installed squarely. Inspect the bearings and reinstall if necessary.

If backlash is excessive, replace the countershaft gear adjustment shim with a thinner one.
If the backlash is too small, replace the countershaft shim with a thicker one.

Backlash is changed by about 0.06–0.07 mm (0.002–0.003 in) when thickness of the shim is changed by 0.10 mm (0.004 in).

COUNTERSHAFT/OUTPUT DRIVE GEAR ADJUSTMENT SHIMS:

A: 0.04 mm (0.002 in)
B: 0.20 mm (0.008 in)
C: 0.25 mm (0.010 in)
D: 0.30 mm (0.012 in) standard
E: 0.35 mm (0.014 in)
F: 0.40 mm (0.016 in)

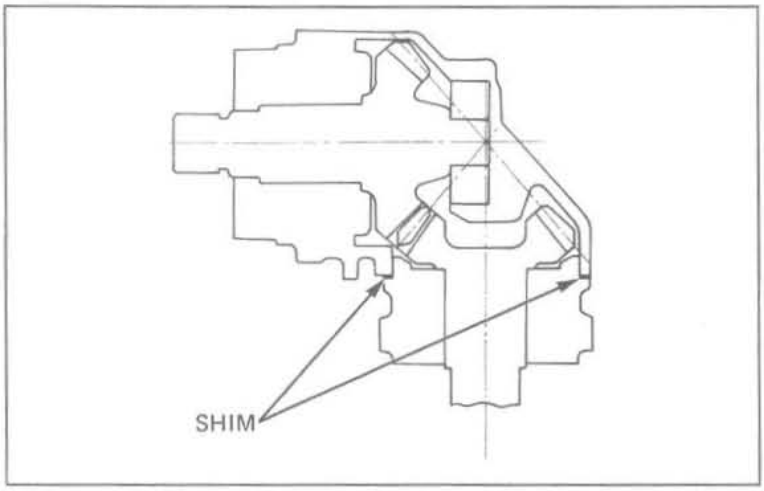

OUTPUT GEAR CASE GASKET SELECTION

NOTE:

- The output gear must be assembled for this selection procedure to be accurate.
- This selection is only necessary when the gear set, drive gear bearing or gear case is replaced or if the original gasket was not marked or measured when removed.

Measure the thickness of the countershaft adjustment shim (thrust washer on the left side).
Install a washer on the shaft.

NOTE:

The washer is used to provided a flat surface for the preload inspection tool and enough space to make an accurate measurement A (shown on next page). Any think washer with an I.D. that will fit over the shaft will work (such as the countershaft right end thrust washer).

Install the preload inspection tool 07998–4150000 on the shaft against the washer and tighten the set screw.

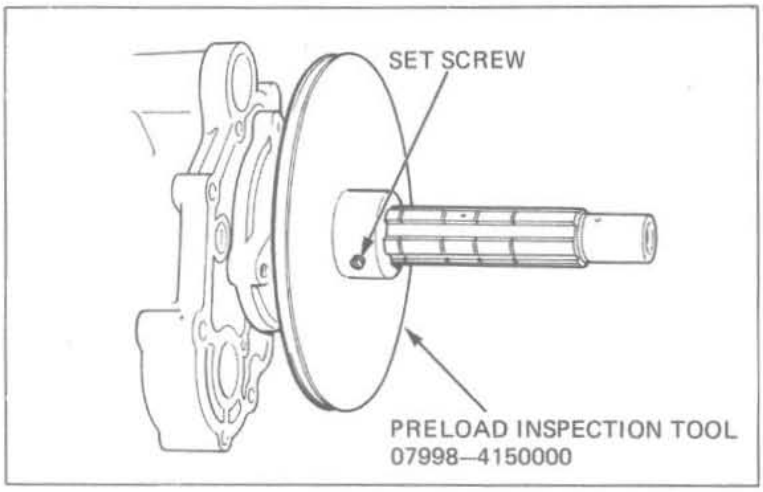

Measure distance from the gear case mating surface to the bottom of the preload tool.
Measure in three places.
Then subtract the washer thickness from the distance measured. This will give you distance "A".

Distance measured (___ mm)
– washer thickness (___ mm) = distance A

STANDARD: 35.00 ± 0.10 mm
(1.378 ± 0.004 in)

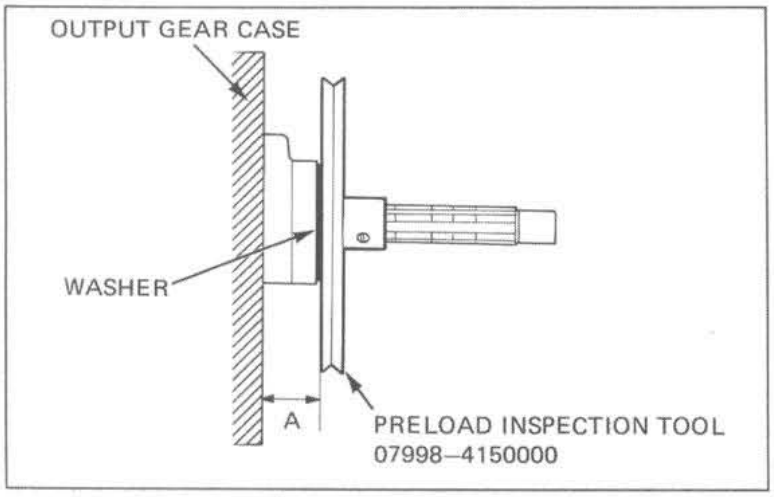

Select the correct gasket thickness to obtain the standard distance A by using the formula below.

DISTANCE A	STD. DISTANCE	GASKET THICKNESS REQUIRED
([mm] + 0.05 mm) – 35 mm =		[mm]

NOTE:

The addition of 0.05 mm is to compensate for the amount of gasket crush during assembly.

COUNTERSHAFT INSPECTION

NOTE:

> Countershaft spacer selection should be performed whenever you replace any of the following parts:
> - Crankcase (Section 11)
> - Countershaft bearing (Section 11)
> - Countershaft

Select the correct output gear case gasket. (page 13-15).
Install the output gear case assembly and new gasket onto the lower case.
Assemble the transmission with the original spacer.

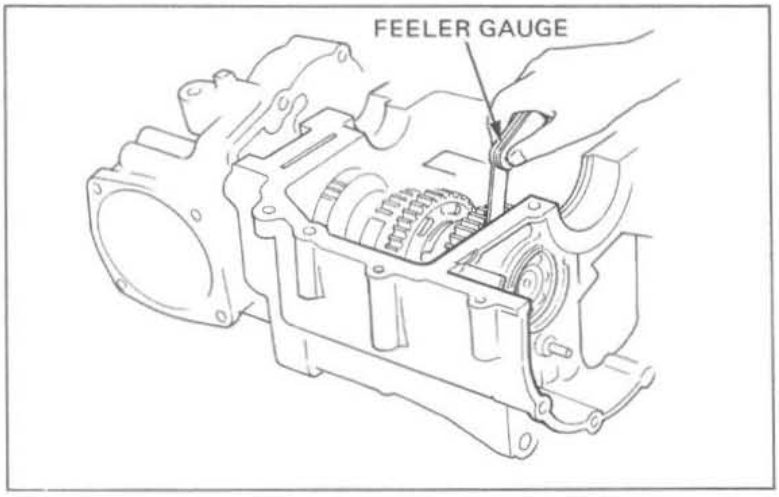

Measure the clearance between the bearing and spacer with a feeler gauge.

CLEARANCE: 0.3–0.4 mm (0.012–0.016 in)

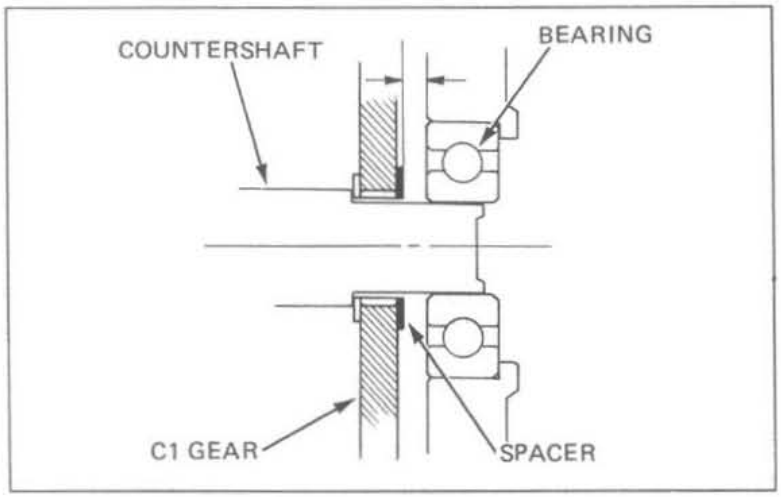

If the clearance exceeds the limit, select a spacer to obtain the correct clearance:

SPACER/THICKNESS:
A: 1.0 mm (0.039 in)
B: 1.1 mm (0.043 in)
C: 1.2 mm (0.047 in)

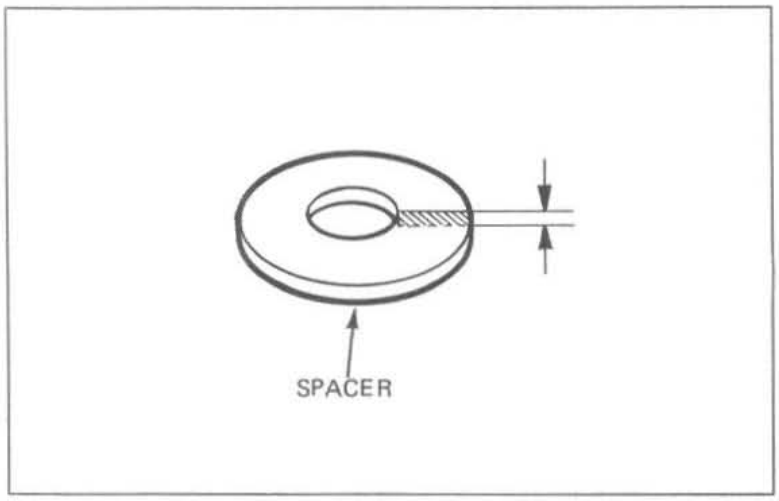

Date of Issue: May, 1982

SHIFT FORK AND SHIFT DRUM

REMOVAL

Remove the bearing stopper plates.

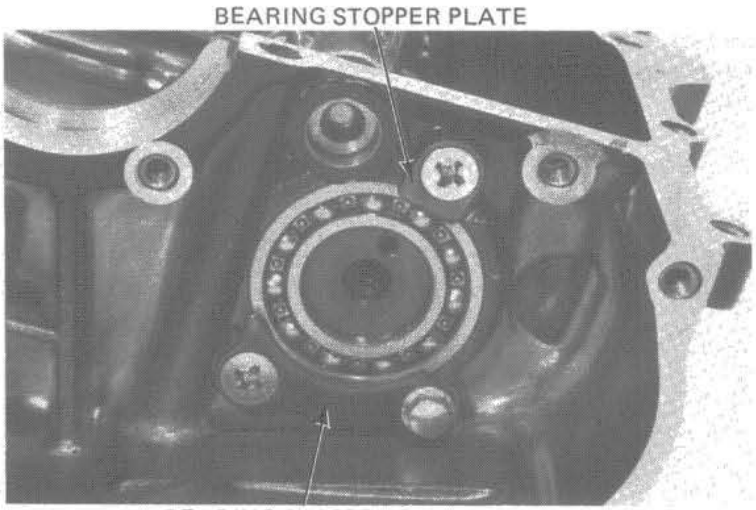

Bend the lock washer tab down and remove the center fork mounting bolt.
Remove the shift fork shaft and shift forks.
Remove the shift drum.

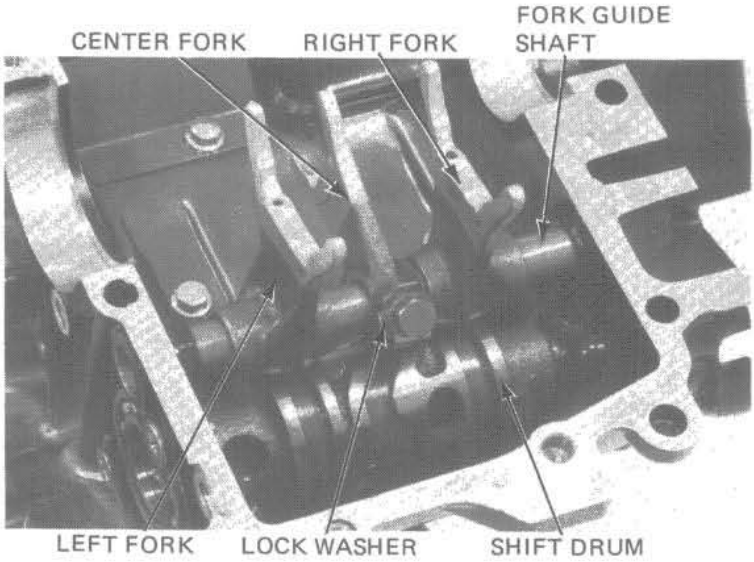

GEAR SHIFT DRUM AND SHIFT FORK INSPECTION

Inspect the shift drum end for scoring, scratches, or evidence of insufficient lubrication.
Check the shift drum grooves for damage.

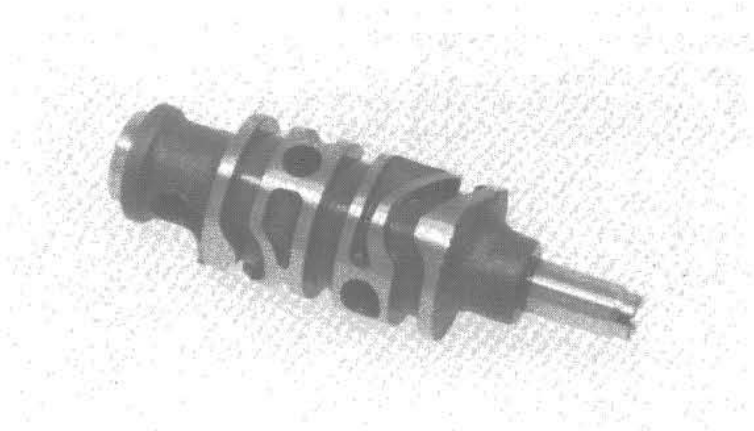

Inspect the shift drum hole and shift fork shaft hole for scoring or scratches.

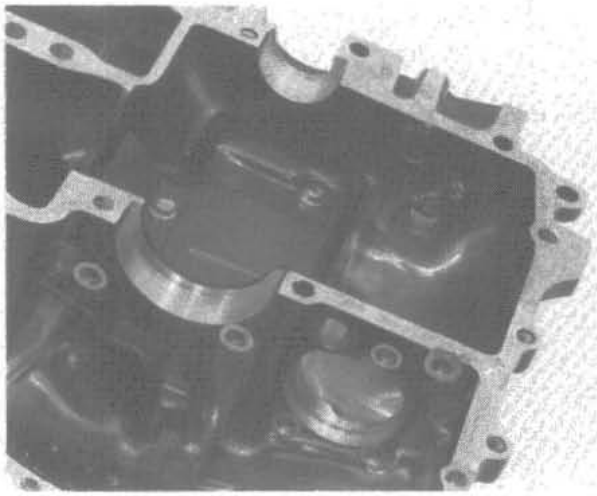

Measure the shift fork shaft O.D. at right and left shift fork surfaces.
Check for scratches, scoring or evidence of insufficient lubrication.

SERVICE LIMIT: 13.90 mm (0.547 in)

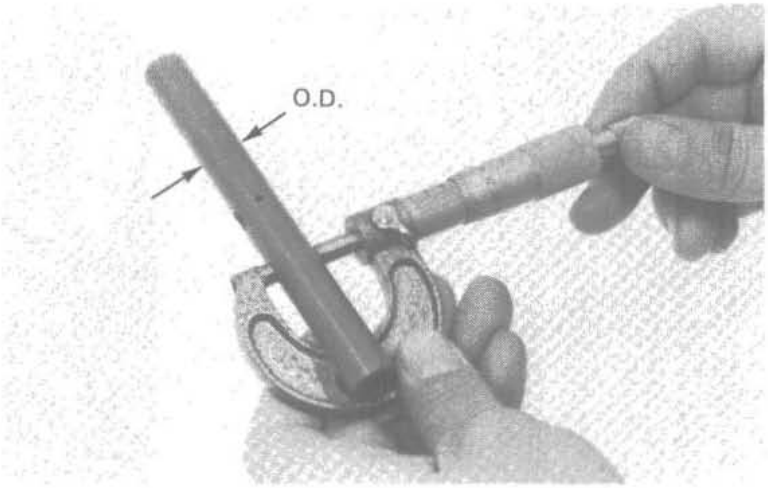

Measure the right and left shift fork I.D.
Measure the shift fork claw thickness.

SERVICE LIMITS:
I.D. (right and left fork): 14.04 mm (0.553 in)
CLAW THICKNESS: 6.1 mm (0.24 in)

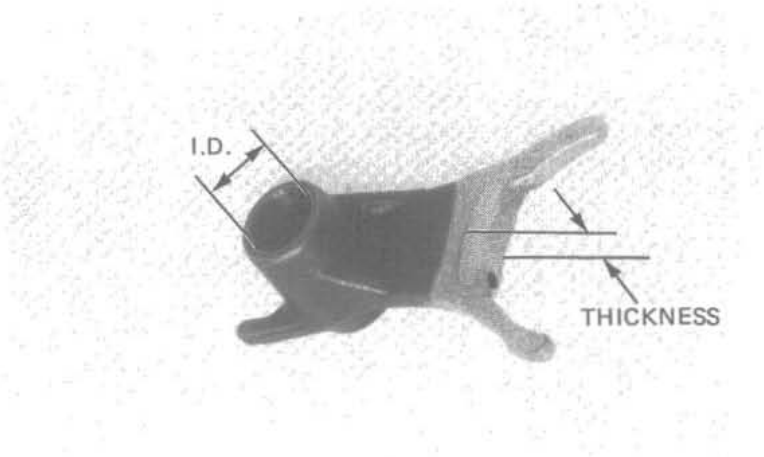

INSTALLATION

Install the shift drum and shift fork.

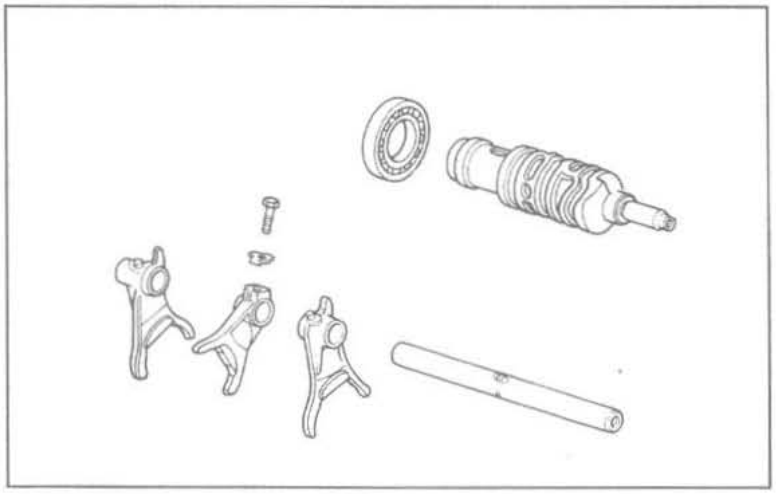

Install the lock washer and tighten the center fork bolt.

TORQUE: 16–20 N·m (1.6–2.0 kg-m, 12–14 ft-lb)

Bend the lock washer tabs up.

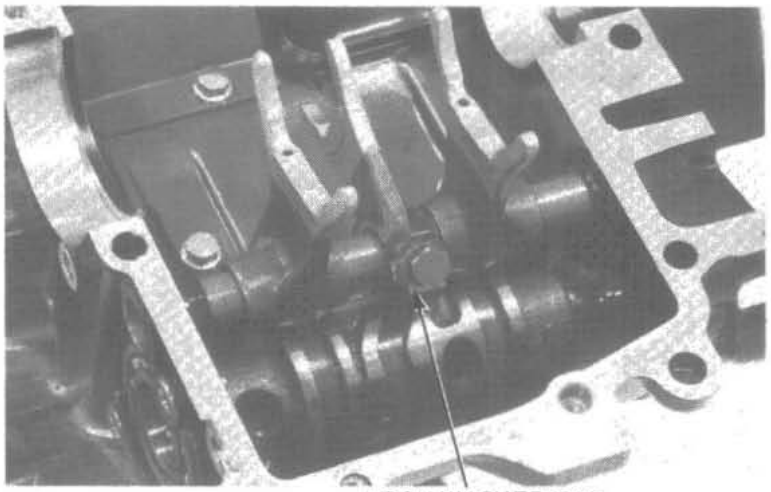

Apply a locking agent to the screw threads and install the bearing stopper plates.

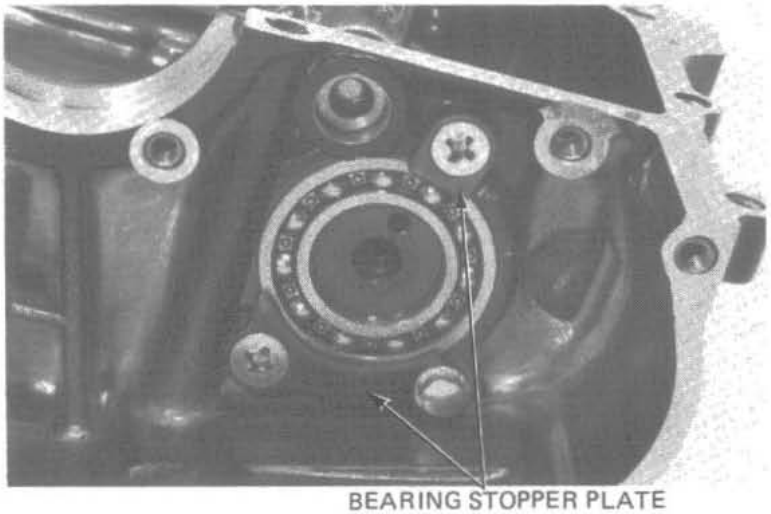

TRANSMISSION ASSEMBLY

MAINSHAFT

Install the mainshaft bearing with the special tools.

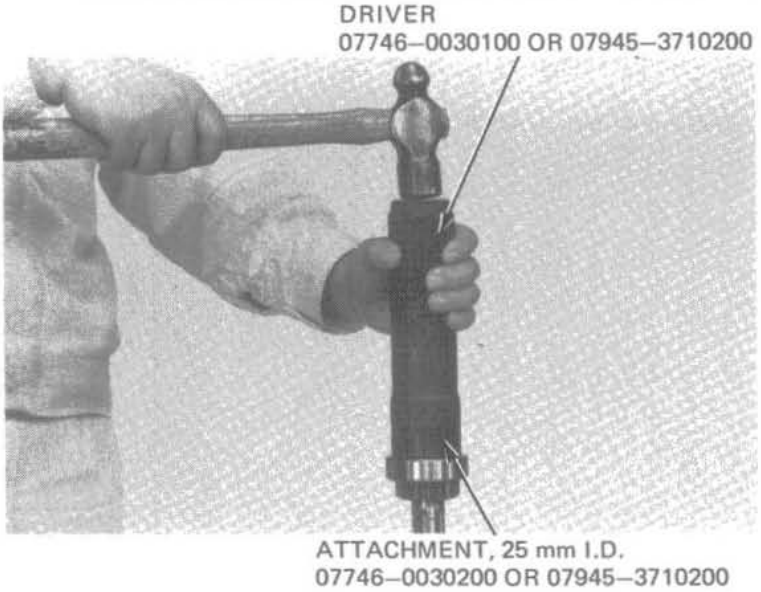

Check the gears for freedom of movement or rotation on the shaft.
Check that the snap rings are seated in the grooves.

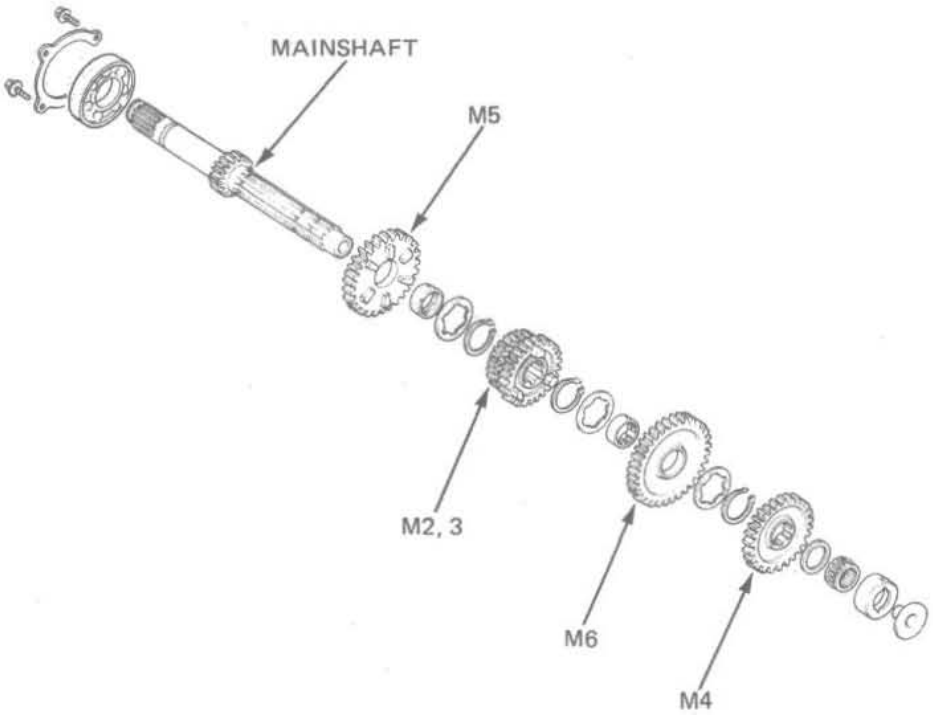

Date of Issue: May, 1982

Align the hole in the M6 gear bushing with the hole in the mainshaft.

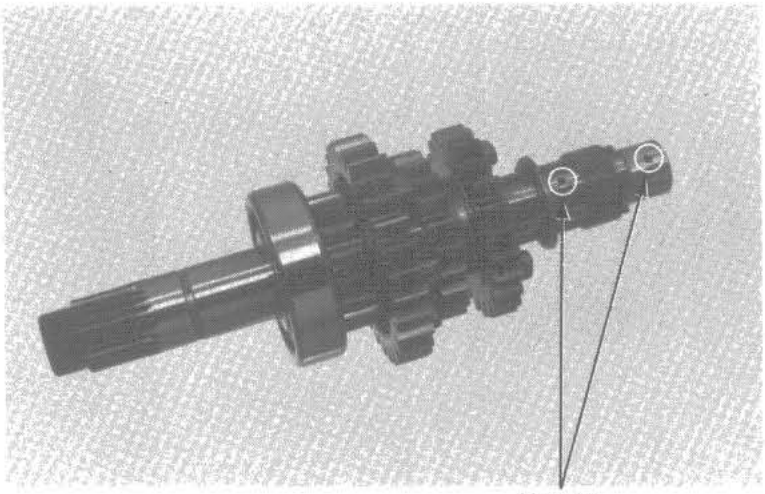

COUNTERSHAFT

Before placing the countershaft in the crankcase, install the C4 and C6 gears, washers and collar.

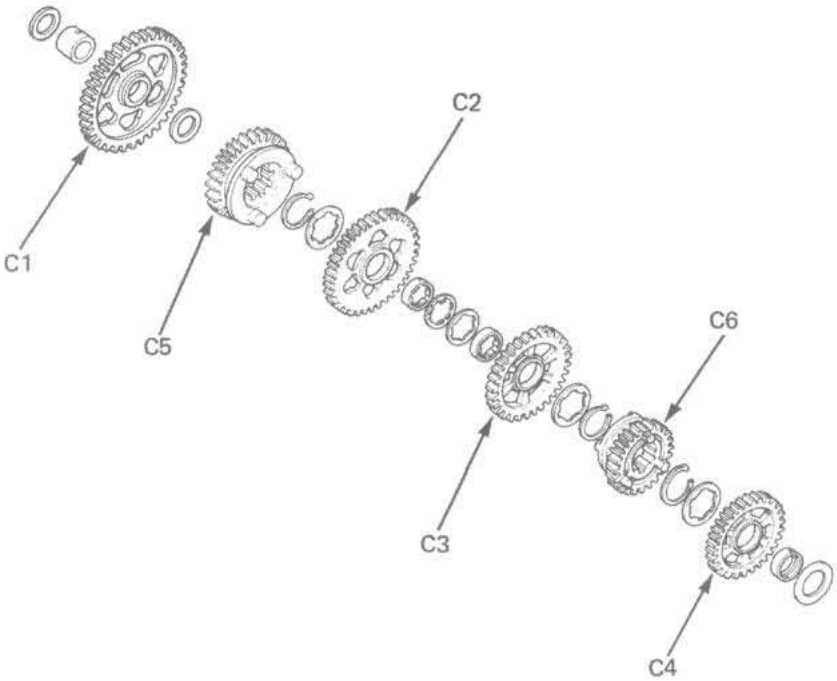

Align the hole in the C3 gear bushing with the hole in the countershaft.

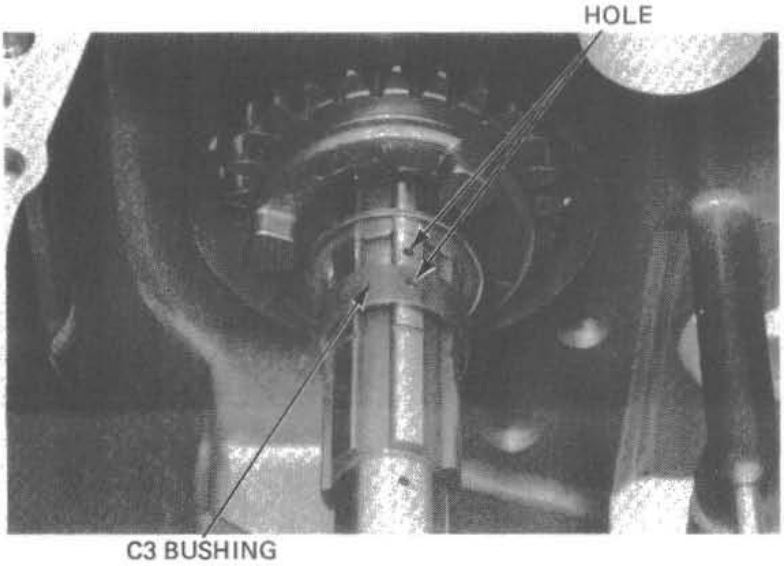

Install the C3 gear and spline collar.
Install the stopper washer while aligning the tab of the stopper washer with the groove in the spline collar.

Assemble the C2, C5 and C1 gears, washers and collars.

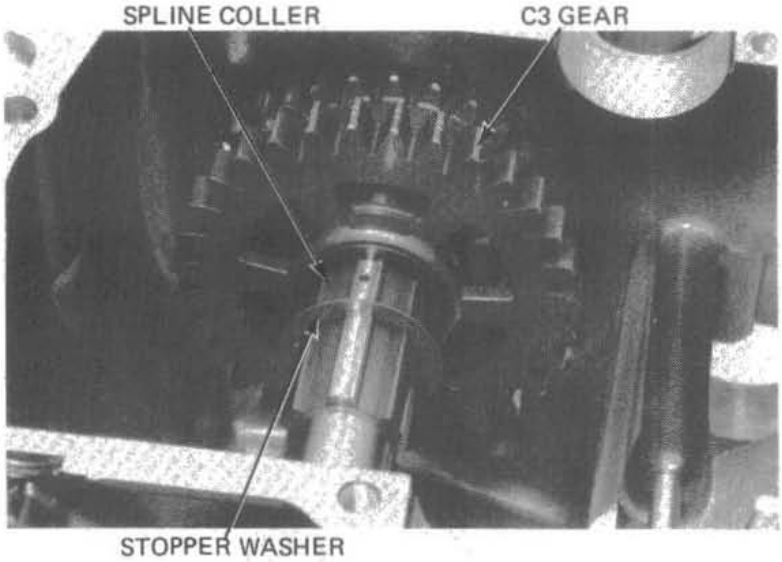

Install the lower crankcase (Refer to Section 11).

NOTE:

Check the oil orifice for clogging, before installing the lower crankcase.

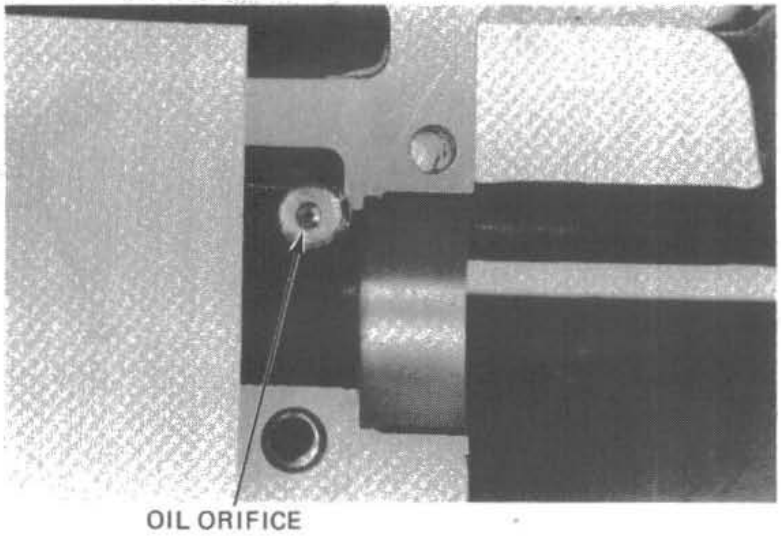

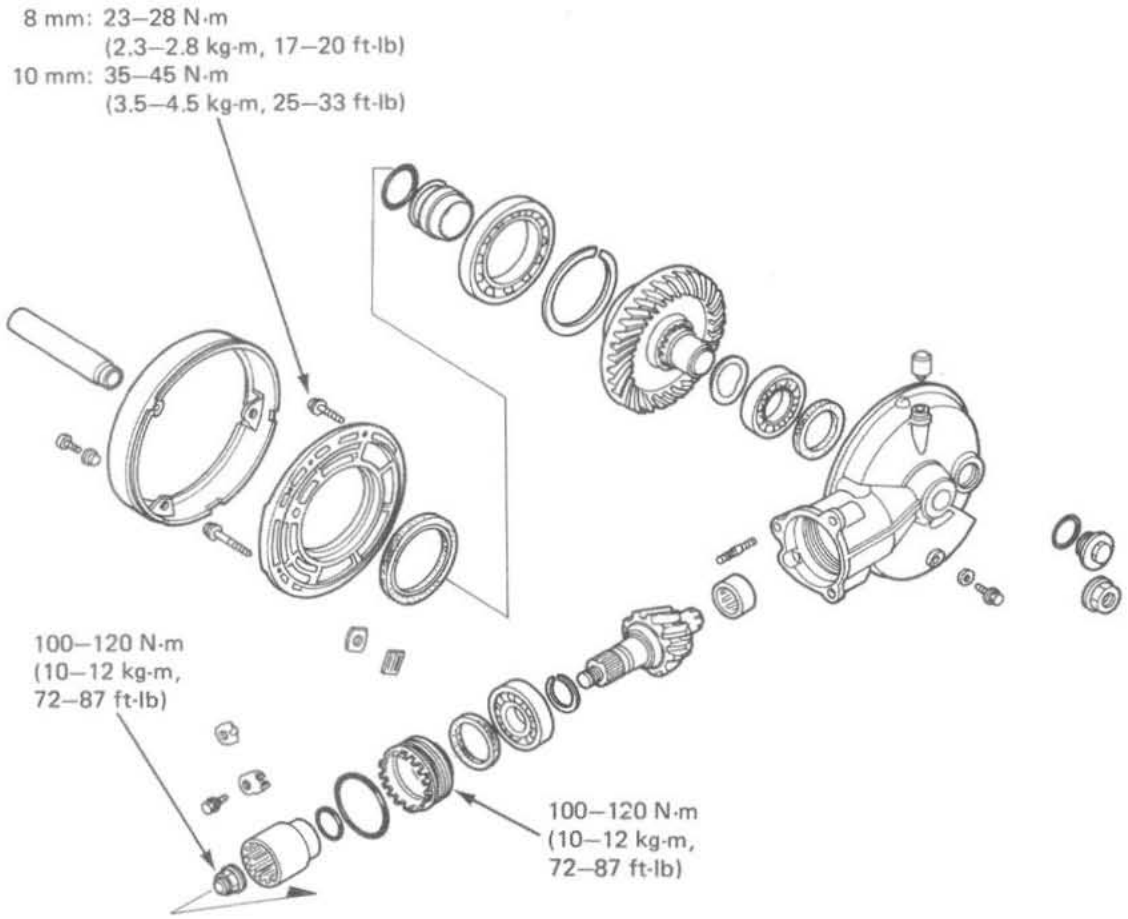

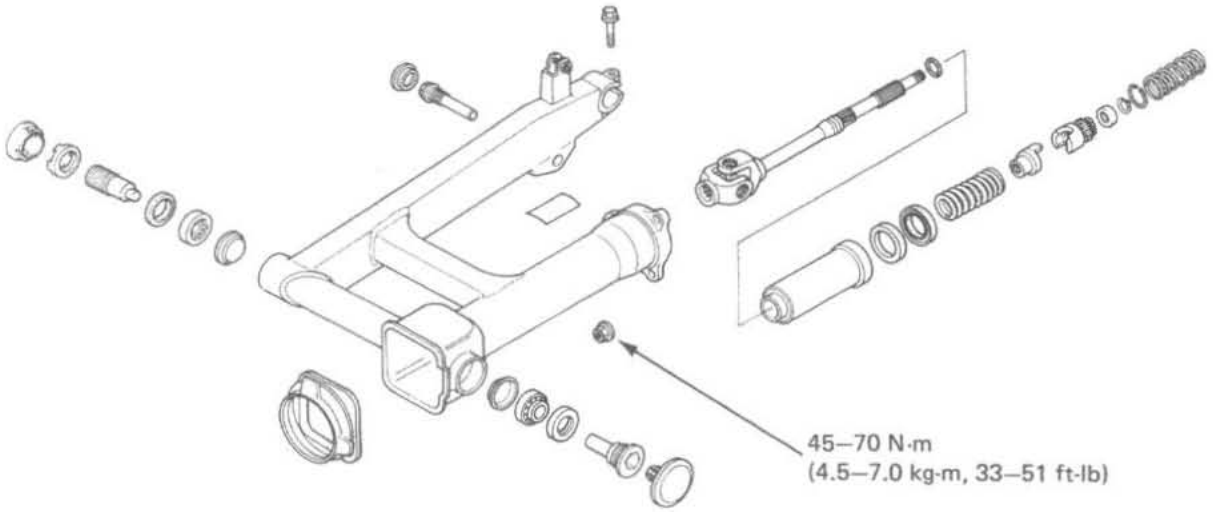

Date of Issue: May, 1982

14. DRIVE TRAIN

SERVICE INFORMATION

GENERAL

- The final drive gear assembly must be removed together with the drive shaft.
- Replace all oil seals and O-rings whenever the final drive gear assembly is disassembled.
- Check tooth contact pattern and gear backlash when the bearing, gear set and/or gear case has been replaced.
- When using the lock nut wrench, use a deflecting beam type torque wrench 14-20 inches long. The lock nut wrench increases the torque wrench's leverage, so the torque wrench reading will be less than the torque actually applied to the lock nut. The specification given is the actual torque applied to the lock nut, not the reading on the torque wrench when used with the lock nut wrench. The torque wrench scale reading is given with the actual torque specification.

SPECIFICATIONS

14

		STANDARD	SERVICE LIMIT
Final gear oil	Capacity	150 cc (5.1 ozs) after disassembly	—
	Recommended oil	Hypoid-gear oil API, GL–5 Above 5°C/41°F SAE #90 Below 5°C/41°F SAE #80	—
Gear backlash		0.08–0.18 mm (0.003–0.007 in)	0.30 mm (0.012 in)
Gear assembly preload		0.2–0.3 N·m (2–3 kg-cm, 1.7–2.6 in-lb)	—
Damper case oil capacity		80 cc (2.7 oz)	—
Damper cam spring free length		101 mm (4.0 in)	99 mm (3.9 in)

TORQUE VALUES

Pinion bearing retainer	100–120 N·m (10–12 kg·m, 72–87 ft-lb)
Pinion nut	100–120 N·m (10–12 kg·m, 72–87 ft-lb)
Gear case cover bolt 10 mm	35–45 N·m (3.5–4.5 kg·m, 25–33 ft-lb)
8 mm	23–28 N·m (2.3–2.8 kg·m, 17–20 ft-lb)
Final gear case attaching nut	45–70 N·m (4.5–7.0 kg·m, 33–51 ft-lb)

TOOLS

Special

Shock absorber compressor attachment A	07964–MB00100
Shock absorber compressor attachemnt C	07964–MB00300
Attachment	07945–3330300
Attachment	07947–6340201
Attachment	07945–3330100
Retainer B wrench	07910–4150000 or 07910–MA10100
Pinion puller	07931–4630200 and 07931–MB00000 or 07935–MB00000
Pinion joint holder	07924–MB0000
Driver	07949–3710000

Common

Driver	07749–0010000
Attachment, 42 x 47 mm	07746–0010300
Attachment, 52 x 55 mm	07746–0010400
Attachment, 32 x 35 mm	07746–0010100
Attachment, 37 x 40 mm	07746–0010200
Pilot, 30 mm	07746–0040700
Driver C	07746–0030100] or Driver 07945–3710200
Attachment, 25 mm I.D.	07746–0030200]
Shock absorber compressor	07959–3290001

TROUBLESHOOTING

Excessive noise

1. Worn or scored ring gear shaft and driven flange
2. Scored driven flange and wheel hub
3. Worn or scored drive pinion and splines
4. Worn pinion and ring gears
5. Excessive backlash between pinion and ring gear
6. Oil level too low

Oil leak

1. Clogged breather
2. Oil level too high
3. Seals damaged

Date of Issue: May, 1982

FINAL DRIVE REMOVAL

Place the motorcycle on its center stand.
Drain the final gear oil (page 2-10) and remove the rear wheel (page 17-3).
On the V45 MAGNA, remove the left shock absorber (page 17-18).

Place an oil drain pan under the gear case and swing arm mating surfaces to catch any damper cam oil that may leak out during removal of the gear case.

Remove the final gear case attaching nuts and remove the gear case from the swing arm.

NOTE:

> If the drive shaft comes out with the final gear case it indicates that the damper cam is equipped with a stop ring. The stop ring was used for production line assembly purposes. See below for instructions on removing the drive shaft.

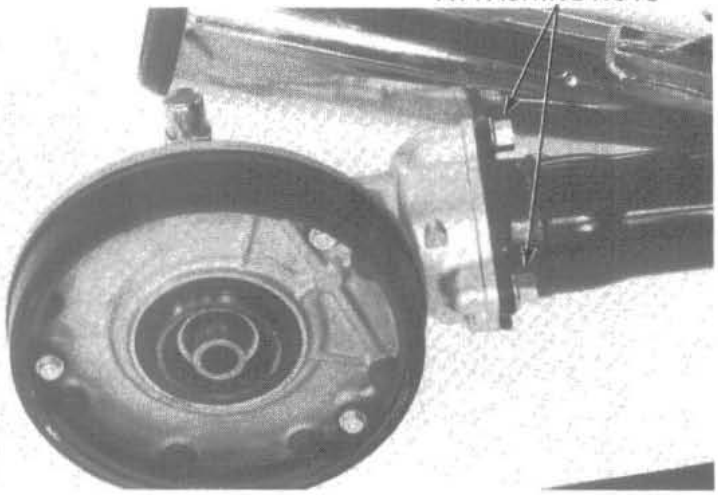

DRIVE SHAFT

REMOVAL

If the drive shaft remained in the swing arm when the final gear case was removed, then simply pull it out of the swing arm.

If the drive shaft came out of the swing arm attached to the final gear case when it was removed, then the damper cam is probably equipped with a stop ring as described above. Remove the drive shaft from the final gear case as described below.

Insert the axle through the gear case and secure the case in a vise with soft jaws or shop rags by clamping the axle. Place the oil drain (Sabre)/shock mount (Magna) between the jaws for stability.

Place an oil drain pan under the damper case to catch the damper oil that will spill out.

Separate the damper unit from the gear case by gently revolving the damper in a circular motion while tugging slightly.

After separation, remove the stop ring from the damper cam. The stop ring is not needed for reassembly, so it can be discarded.

NOTE:

- The circular motion is necessary to compress the stop ring on the damper cam. The stop ring prevents the damper from being pulled straight off.
- The stop ring is used for production line purposes only and is not needed for reassembly.

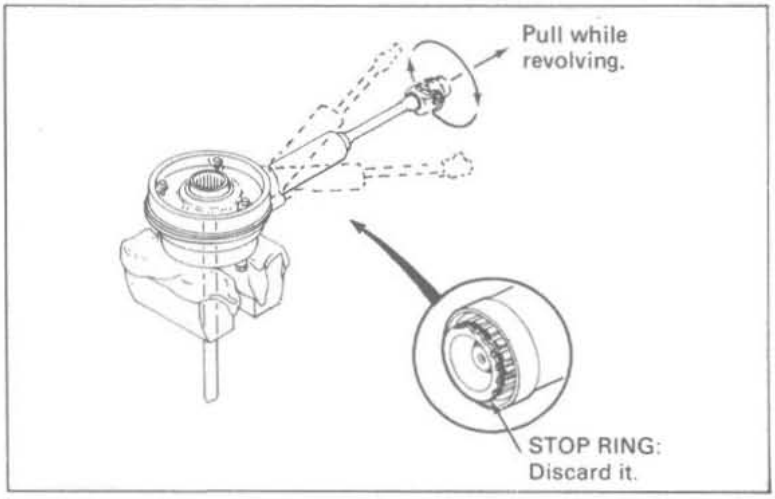

DISASSEMBLY

Compress the drive shaft with the rear shock absorber compressor and attachment tools.

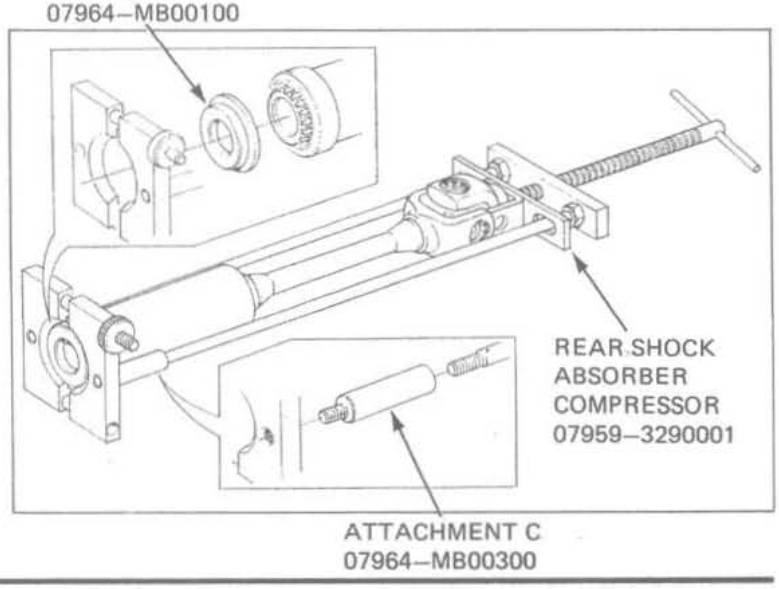

Remove the spring stop ring and drive shaft from the compressor.

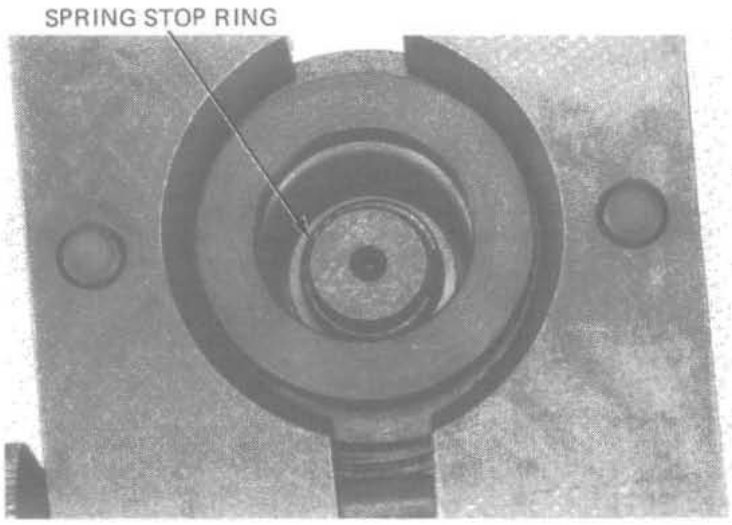

Remove the spring stop, damper cam and damper lifter from the drive shaft.
Check the damper lifter and cam for wear or damage.

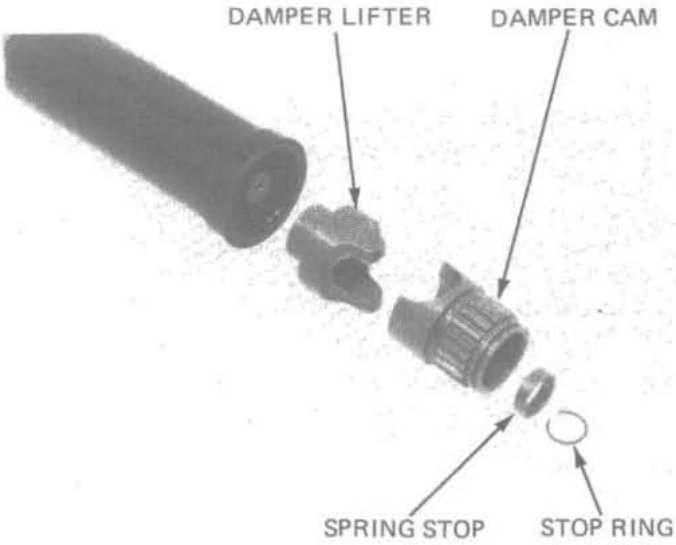

Remove the oil seal and oil seal guide from the damper case.

NOTE:

Replace the oil seal with a new one if it is removed.

Remove the damper cam spring.

Measure the damper cam spring free length.

SERVICE LIMIT: 99 mm (3.9 in)

Remove the damper case and O-ring from the drive shaft.

Fill the damper case with the recommended type and amount of lubricant.

RECOMMENDED OIL: HYPOID GEAR OIL API, GL-5
Above: 5°C/41°F: SAE #90
Below: 5°C/41°F: SAE #80
OIL CAPACITY: 80 cc (2.7 oz).

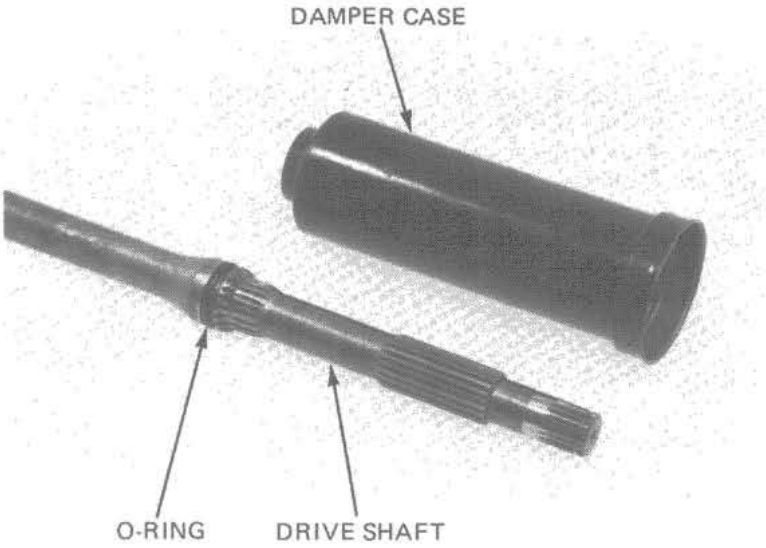

ASSEMBLY

Install the damper cam spring into the damper case. Drive the oil seal guide and oil seal in with the driver and attachment.
Assemble the remaining parts in the reverse order of disassembly.

NOTE:

Replace the O-ring, oil seal and stop ring with new ones when reassembling the drive shaft.

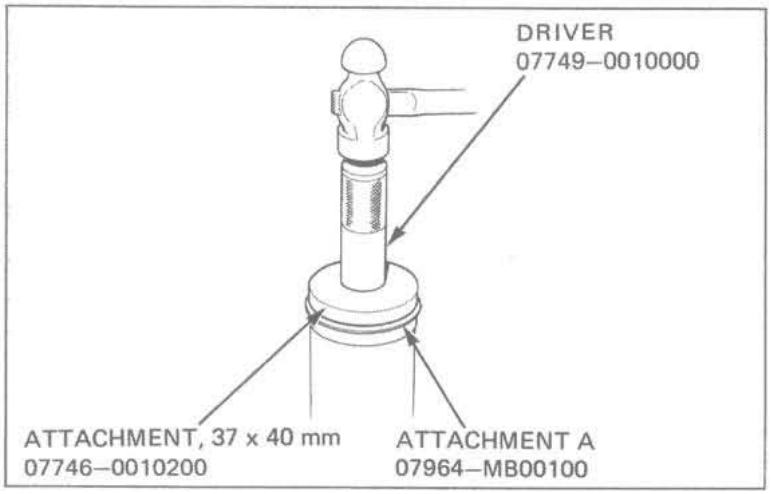

FINAL DRIVE GEAR

RING GEAR REMOVAL

Remove the distance collar and dust guard plate.

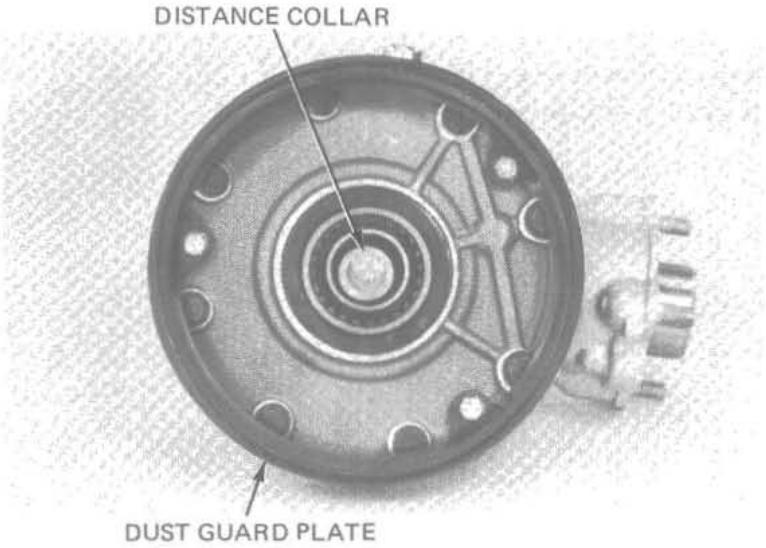

Remove the eight case cover bolts and cover. If the ring gear stays in the cover, do the following:
Support the ring gear and cover with the Ring Gear Puller Attachment, 07947–6340201. Separate the ring gear from the case cover by tapping the cover with a soft hammer.
The oil seal will come out with the ring gear if the tool is used, remove and discard it.

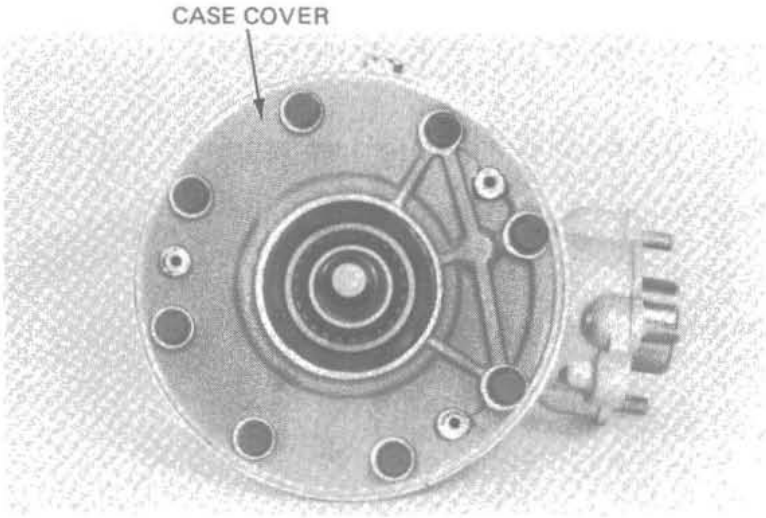

Remove the ring gear from the final drive case.
Remove the O-ring guide by tapping it from the opposite side.

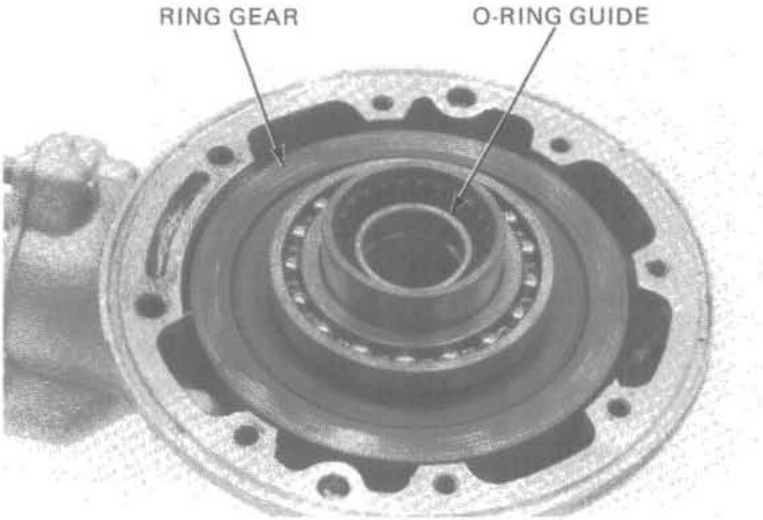

Date of Issue: May, 1982

RING GEAR BEARING REMOVAL

Remove the ring gear bearing and gear adjusting spacer.

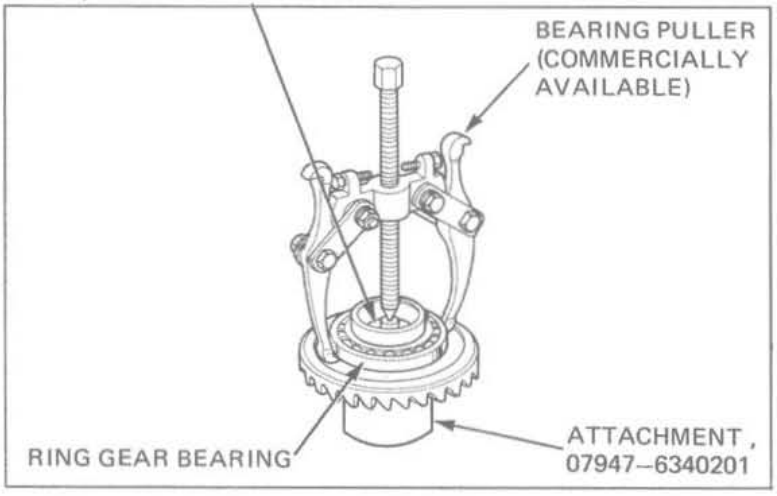

CASE COVER OIL SEAL REPLACEMENT

Remove the oil seal from the case cover and press in a new oil seal.

PINION GEAR REMOVAL

Unstake the pinion shaft nut.
Install the pinion joint holder onto the pinion joint and remove the pinion shaft nut.
Remove the tool and pinion joint.

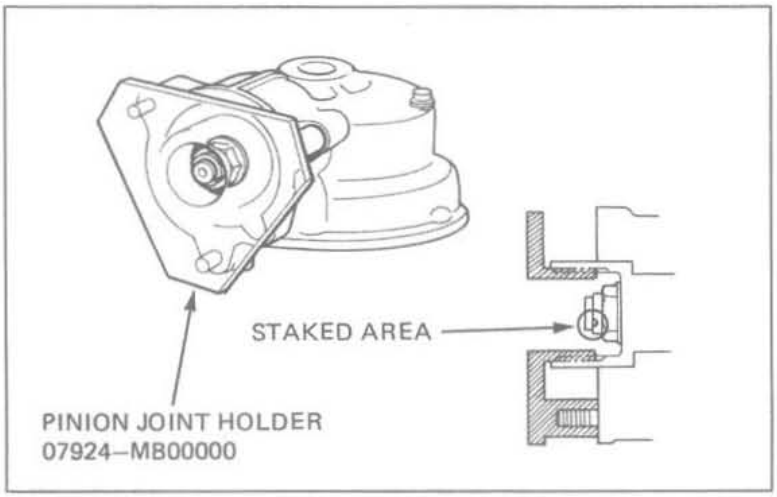

Remove the retainer lock tab.

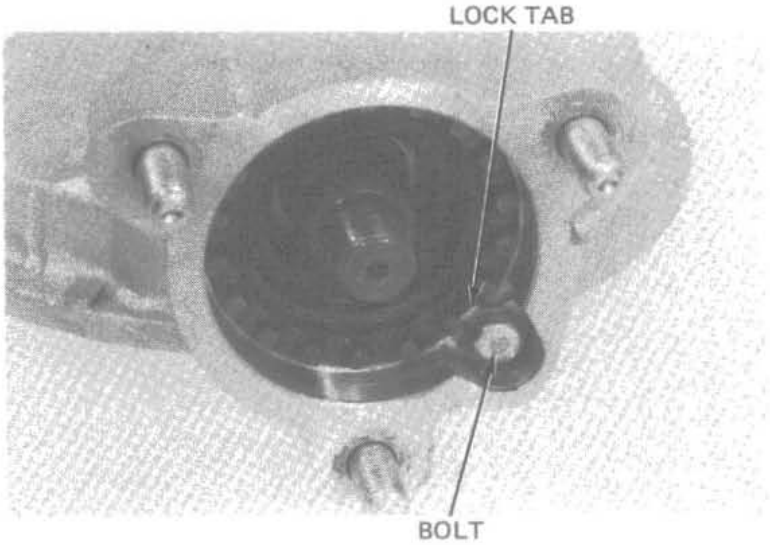

Remove the pinion retainer with the pinion retainer wrench.

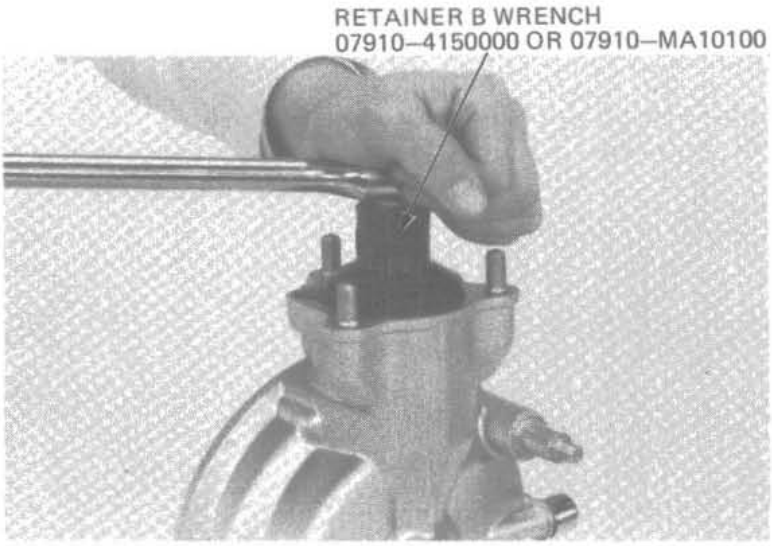

Pull off the pinion assembly with the pinion puller.

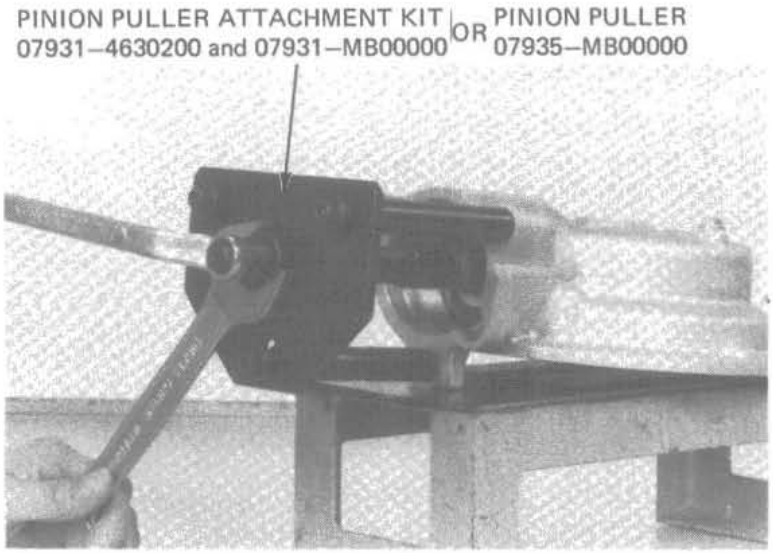

PINION BEARING REMOVAL

Pull the bearing outer and inner races off the shaft with the bearing puller.
Pull the other inner race off with the same tool.
Remove the pinion adjustment spacer.

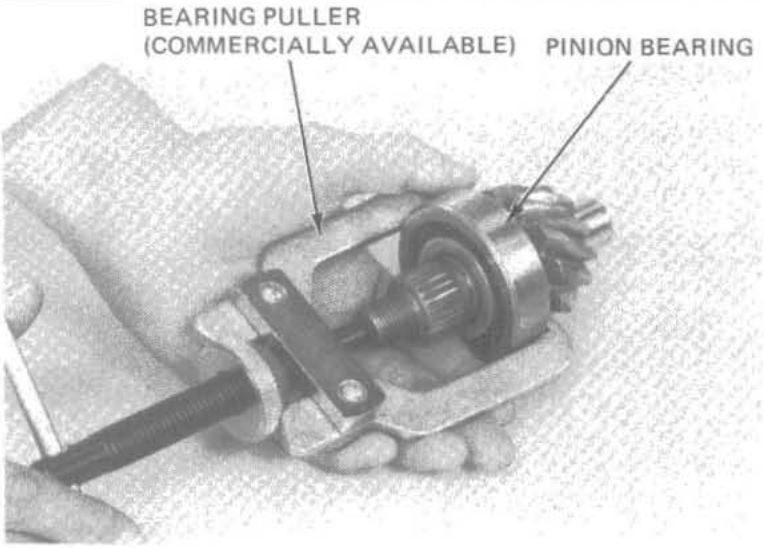

PINION RETAINER OIL SEAL REPLACEMENT

Remove the O-ring and oil seal from the pinion retainer.

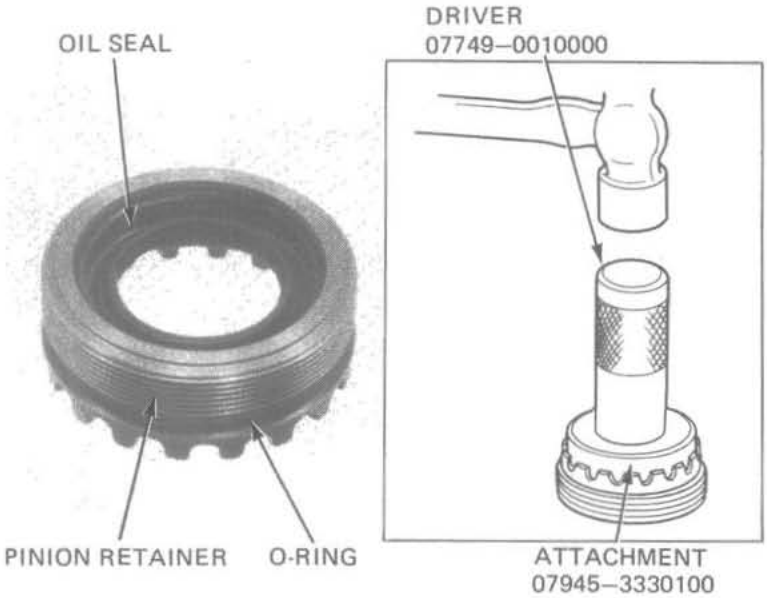

Drive a new oil seal into the retainer.
Coat a new O-ring with oil and install it onto the retainer.

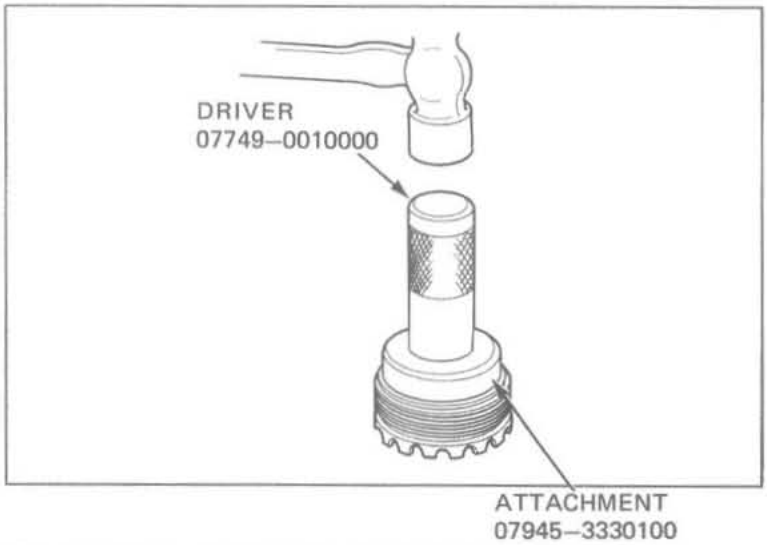

CASE BEARING AND OIL SEAL REPLACEMENT

Heat the gear case to 80°C (176°F).
Tap the gear case with a plastic hammer and remove the ring gear and pinion bearings.

WARNING

Always wear gloves when handling the gear case after it has been heated.

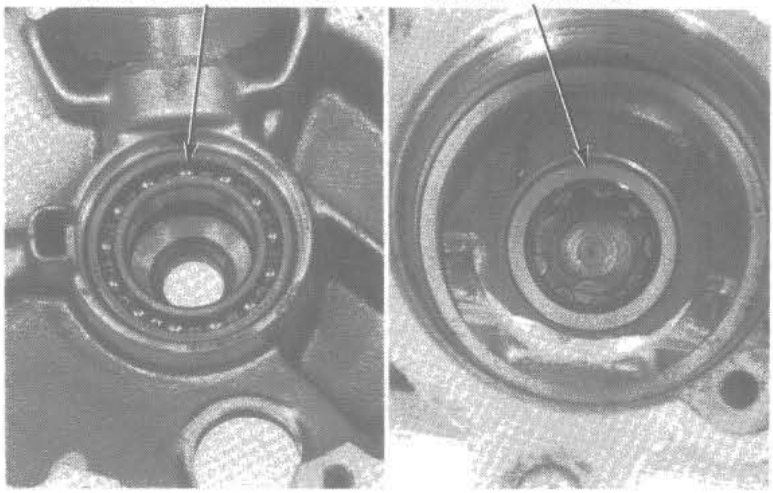

Remove the ring gear shaft oil seal.

Drive a new oil seal into the case, using the driver (07749–0010000) and attachment (07945–3330300).

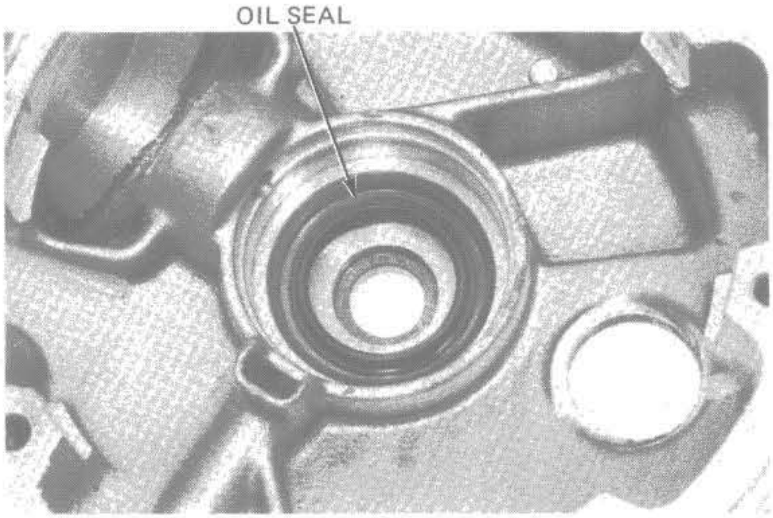

Drive new pinion and ring gear bearings into the case.

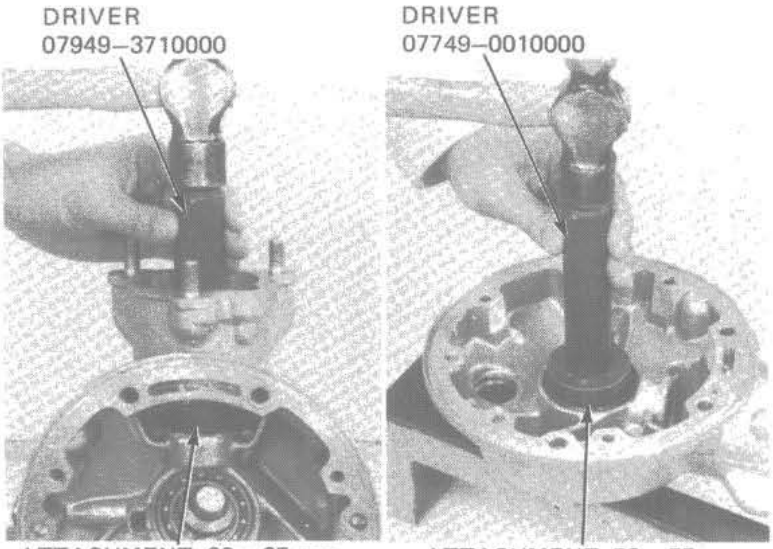

Date of Issue: May, 1982

BREATHER HOLE CLEANING

Remove the breather hole cap and blow through the breather hole with compressed air.

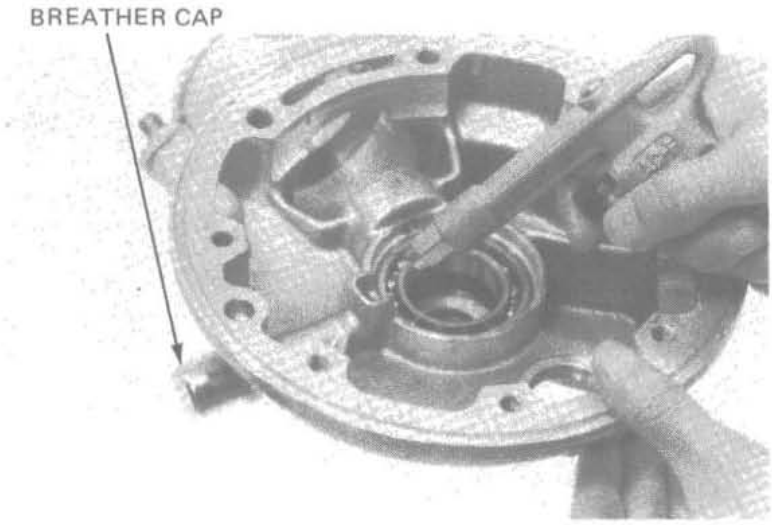

PINION GEAR ASSEMBLY

Install the original pinion gear spacer.

NOTE:

> When the gear set, pinion bearing and/or gear case has been replaced, use a 2.0 mm thick spacer.

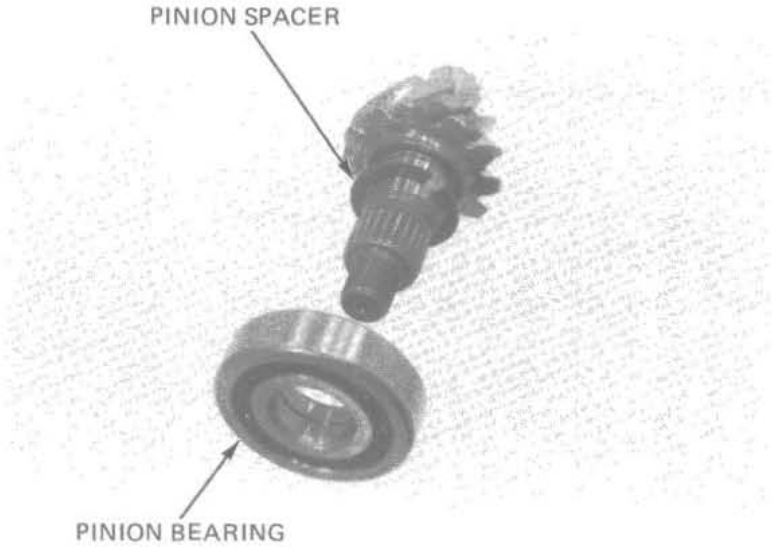

Press the inboard inner race onto the pinion gear using the special tool.
Install the pinion gear bearing outer race and press the other inner race on the shaft until it seats.

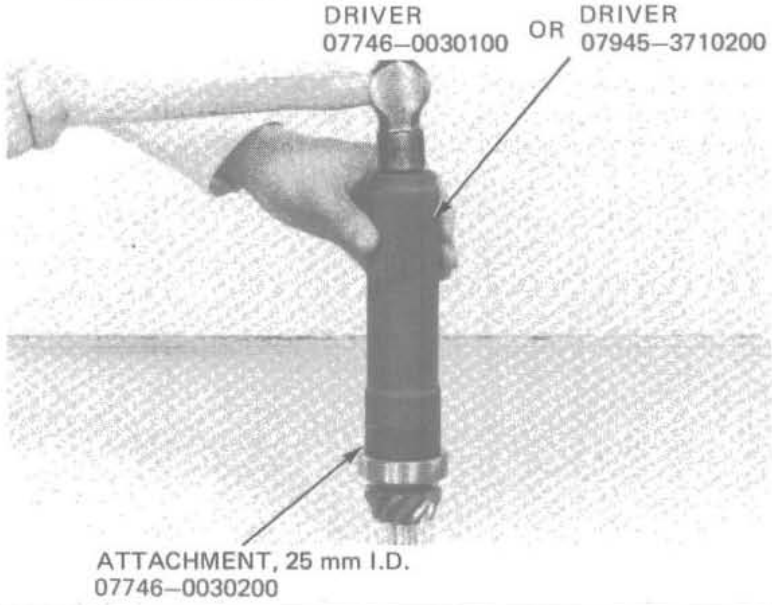

Place the pinion assembly into the gear housing. Apply gear oil to the O-ring and threads on the pinion retainer.
Screw in the pinion retainer to press the pinion bearing in place, then tighten it to the specified torque.

TORQUE: 100–120 N·m (10–12 kg-m, 72–87 ft-lb)

Torque wrench scale reading:
90–108 N·m (9.0–10.8 kg-m, 65–72 ft-lb)

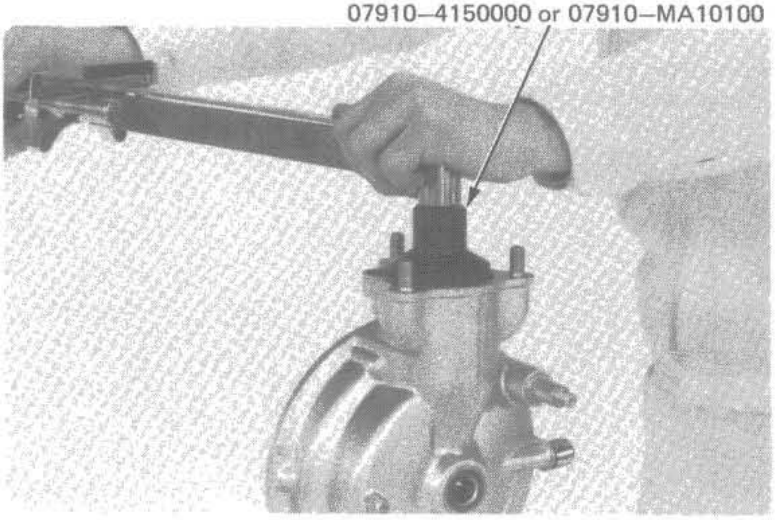

RING GEAR ASSEMBLY

Install the original spacer onto the ring gear.

NOTE:

> If the gear set, pinion bearing, ring gear bearing and/or gear case is replaced, install a 2.0 mm thick spacer.

Place the ring gear bearing over the ring gear shaft.

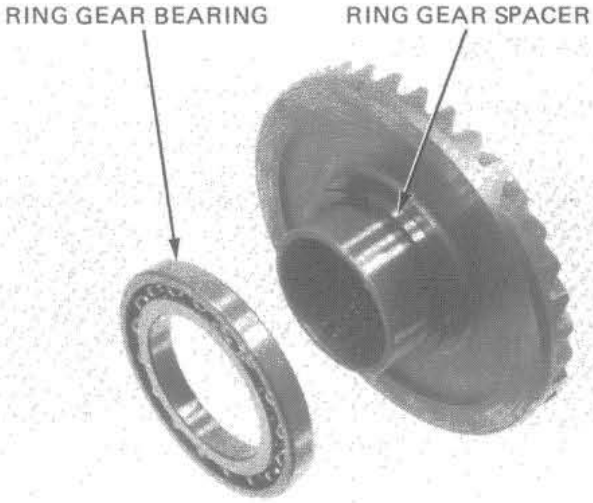

Place a new ring gear bearing on the ring gear shaft. Place the old bearing on top of it.
Drive the new bearing onto the shaft with the old bearing and attachment. Then remove the old bearing.

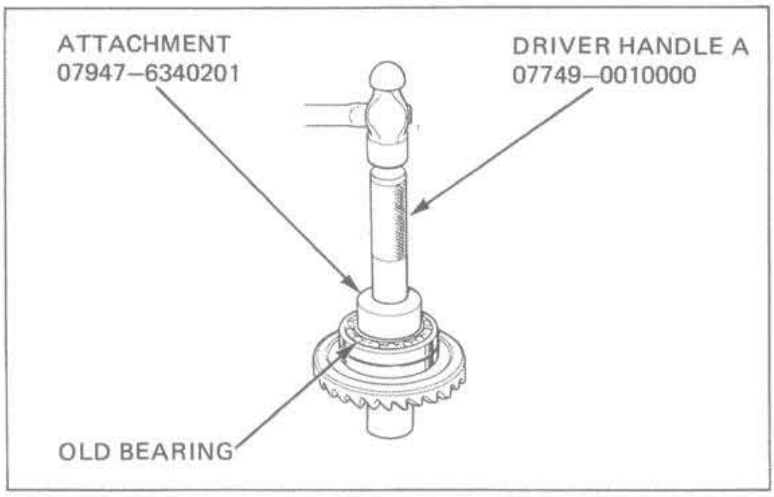

Install a new O-ring on the O-ring guide.
Apply grease to the O-ring and drive the O-ring guide onto the ring gear shaft.

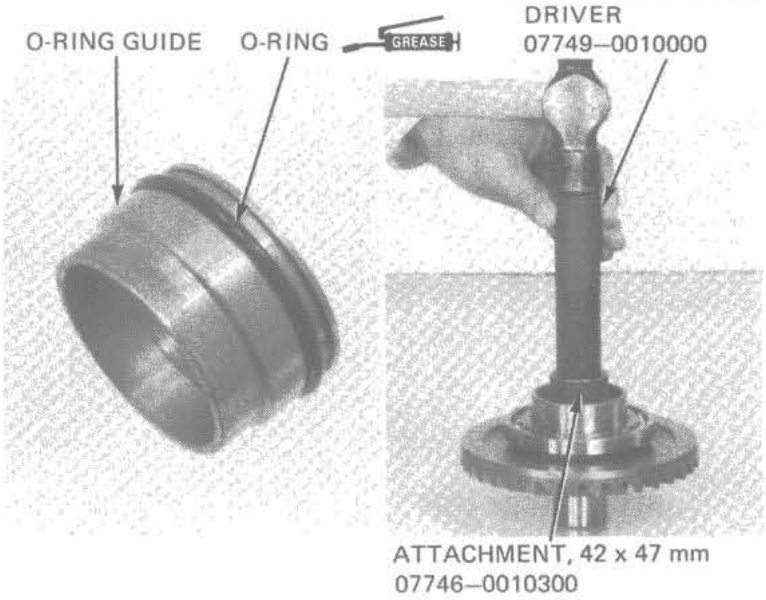

Install the ring gear into the gear case cover.
Measure the clearance between the ring gear and the ring gear stop pin with a feeler gauge.

CLEARANCE: 0.30–0.60 mm (0.012–0.024 in)

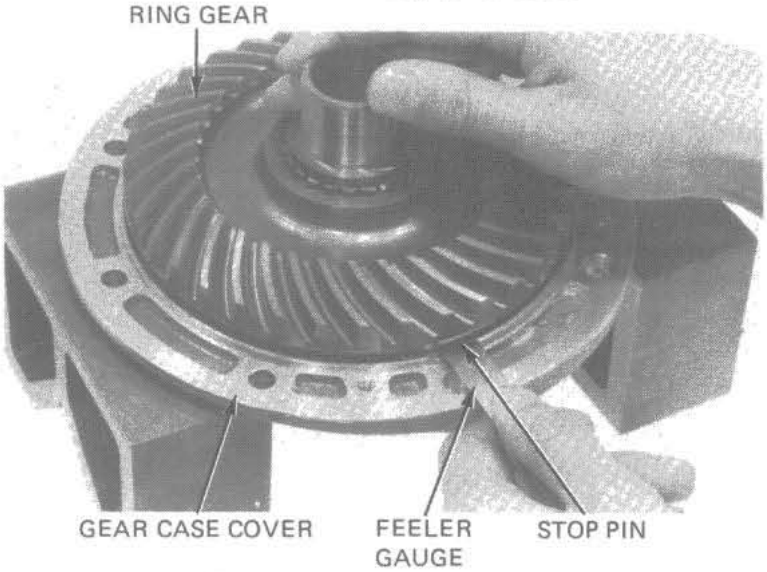

Remove the ring gear.
If the clearance exceeds the limit, heat the gear case cover to approximately 80°C (176°F) and remove the stop pin by tapping the cover.

WARNING

Always wear gloves when handling the gear case after it has been heated.

Install a stop pin shim to obtain the correct clearance.

SHIM THICKNESS: A 0.10 mm (0.004 in)
B 0.15 mm (0.006 in)

Install the shim and drive the stop pin into the case cover.

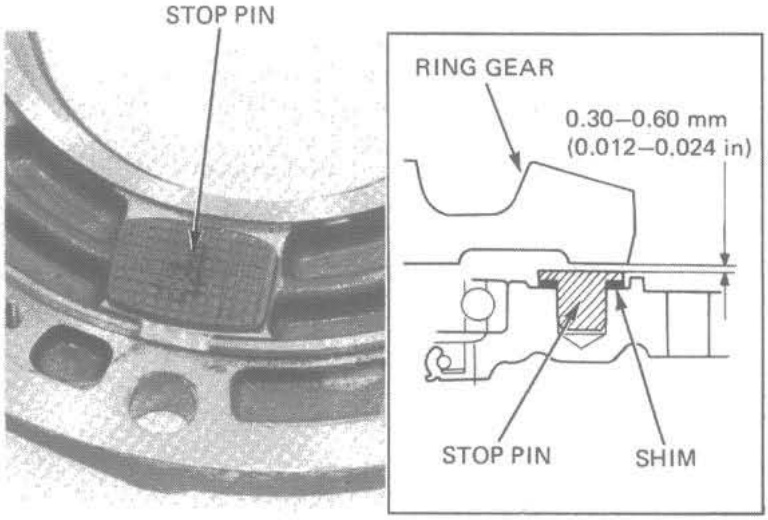

Clean all sealing material off the mating surface of the gear case and cover.

NOTE:

- Keep dust and dirt out of the gear case.
- Be careful not to damage the mating surfaces.

Apply liquid sealant to the mating surface of the gear case cover.

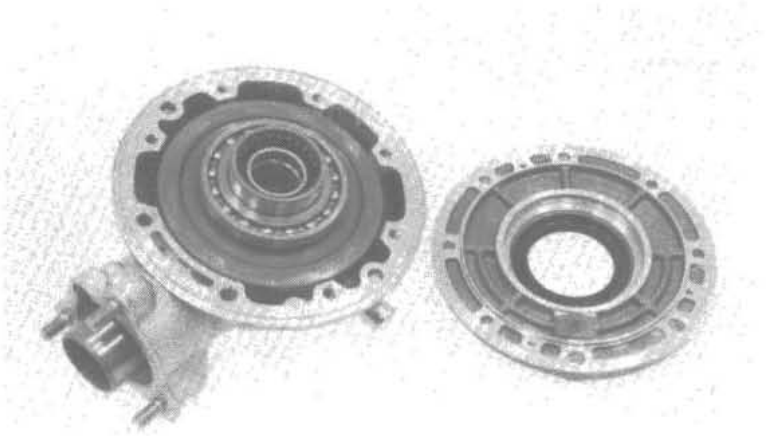

GEAR TOOTH CONTACT PATTERN CHECK

Apply a thin coat of Prussian Blue to the pinion gear teeth for a gear tooth contact pattern check. Place the wave washer and ring gear into the gear case.

Apply gear oil to the lip of the oil seal on the gear case cover and install the gear case cover.

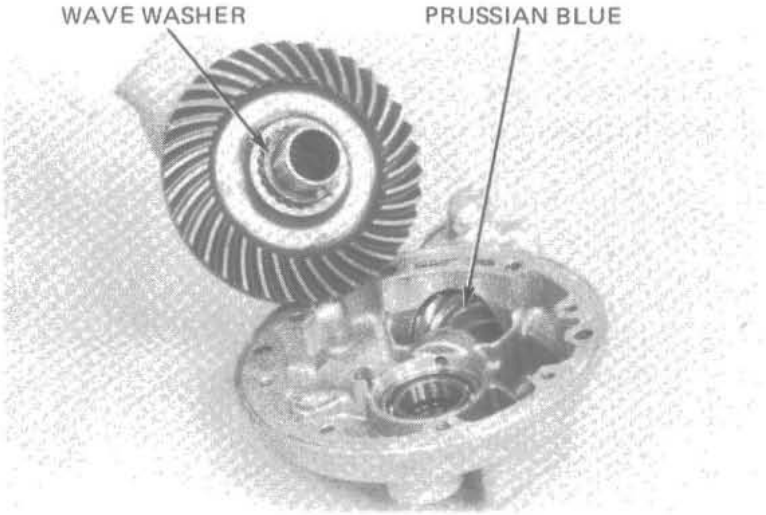

Tighten the cover bolts in 2–3 steps until the cover evenly touchs the gear case, then tighten the 8 mm bolts to the specified torque in a crisscross pattern in two or more steps.

TORQUE: 23–28 N·m (2.3–2.8 kg-m, 17–20 ft-lb)

Then tighten the 10 mm bolts.

TORQUE: 35–45 N·m (3.5–4.5 kg-m, 25–33 ft-lb)

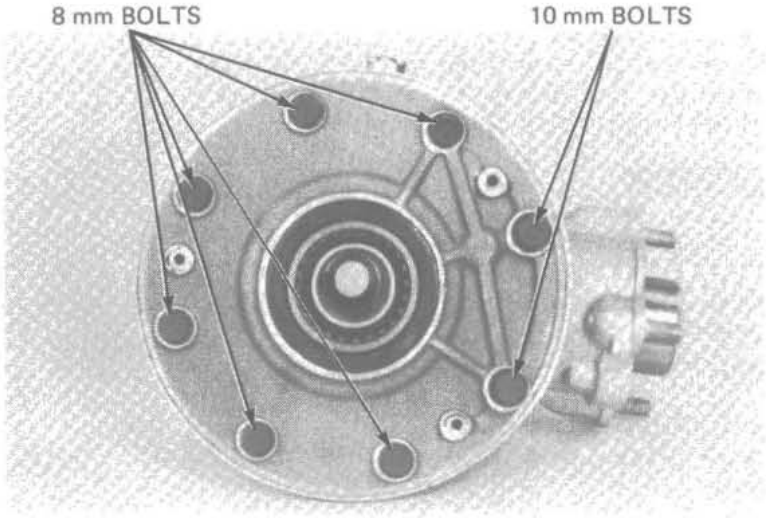

Date of Issue: May, 1982

BACKLASH INSPECTION

Remove the oil filler cap.
Set the final gear assembly into a jig or stand to hold it steady.
Set a horizontal type dial indicator on the ring gear, through the oil filler hole.
Hold the pinion gear spline by hand.
Rotate the ring gear by hand until gear slack is taken up.
Turn the ring gear back and forth to read backlash.

STANDARD: 0.08–0.18 mm (0.003–0.007 in)
SERVICE LIMIT: 0.30 mm (0.02 in)

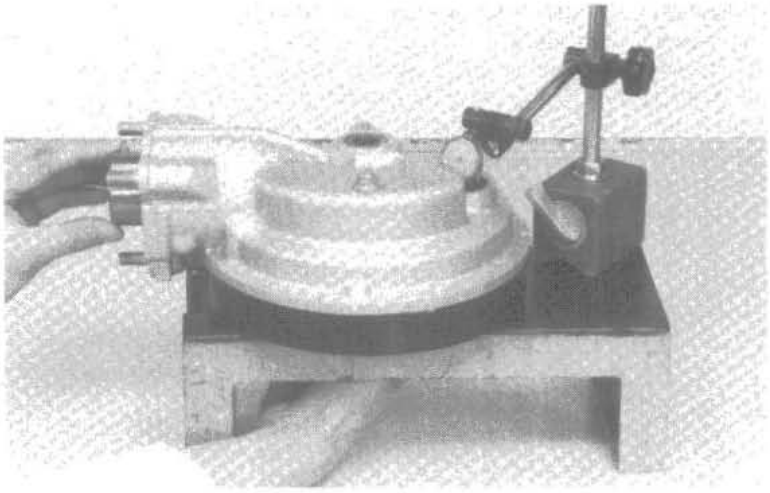

Remove the dial indicator. Turn the ring gear 120° and measure backlash. Repeat this procedure once more.
Compare the difference of the three measurements.

DIFFERENCE OF MEASUREMENT
SERVICE LIMIT: 0.10 mm (0.004 in)

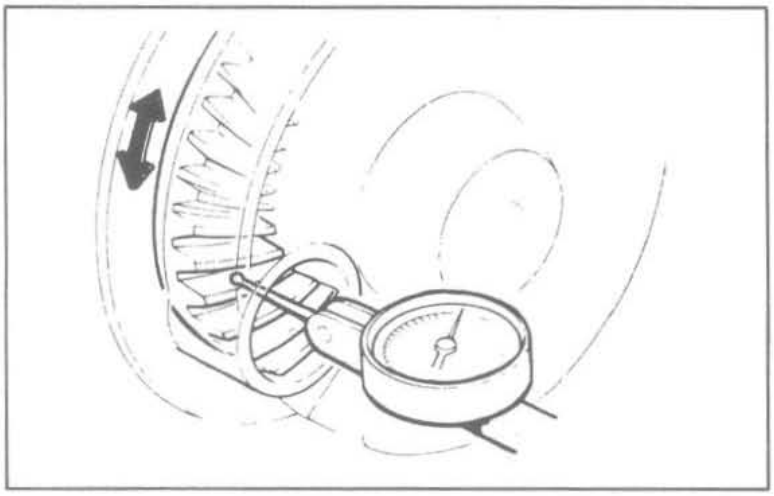

If the difference in measurements exceeds the limit, it indicates that the bearing is not installed squarely. Inspect the bearings and reinstall if necessary.
If backlash is excessive, replace the ring gear spacer with a thicker one.
If the backlash is too small, replace the ring gear spacer with a thinner one.
Backlash is changed by about 0.06–0.07 mm (0.002–0.003 in) when thickness of the spacer is changed by 0.10 mm (0.004 in)

RING GEAR SPACER:

- **A. 1.82 mm (0.072 in)**
- **B 1.88 mm (0.074 in)**
- **C 1.94 mm (0.076 in)**
- **D 2.00 mm (0.079 in)** Standard
- **E 2.06 mm (0.081 in)**
- **F 2.12 mm (0.084 in)**
- **G. 2.18 mm (0.086 in)**
- **H 2.24 mm (0.088 in)**
- **I 2.30 mm (0.091 in)**

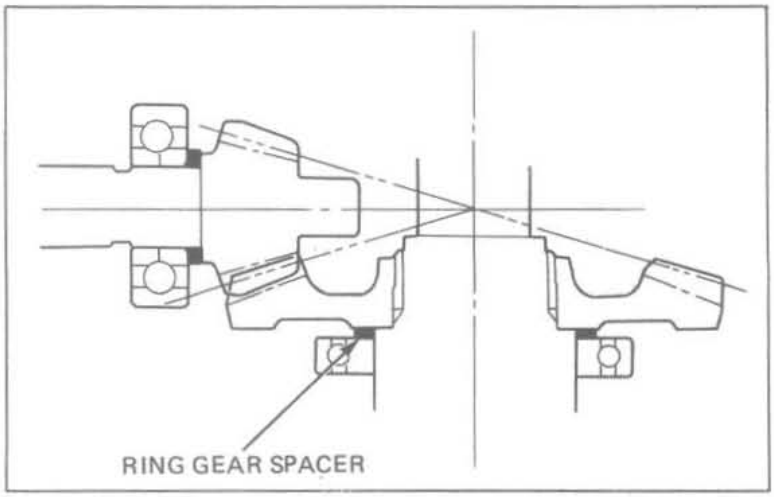

PINION JOINT INSTALLATION

Install the appropriate pinion retainer lock tab.

NOTE:

There are two types of lock tabs as shown.

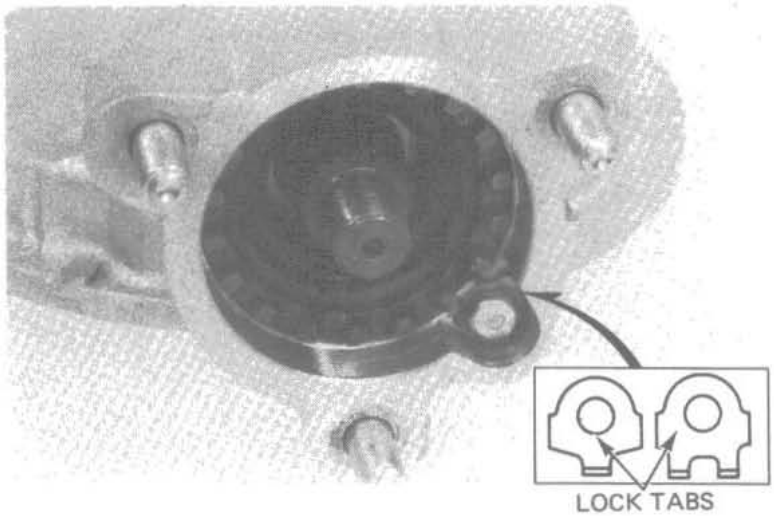

Apply gear oil to the oil seal lip contact surface of the pinion joint and install the pinion joint.
Install the pinion joint holder tool and tighten the pinion nut.

TORQUE: 100–120 N·m (10–12 kg·m, 72–87 ft-lb)

Remove the pinion joint holder tool.

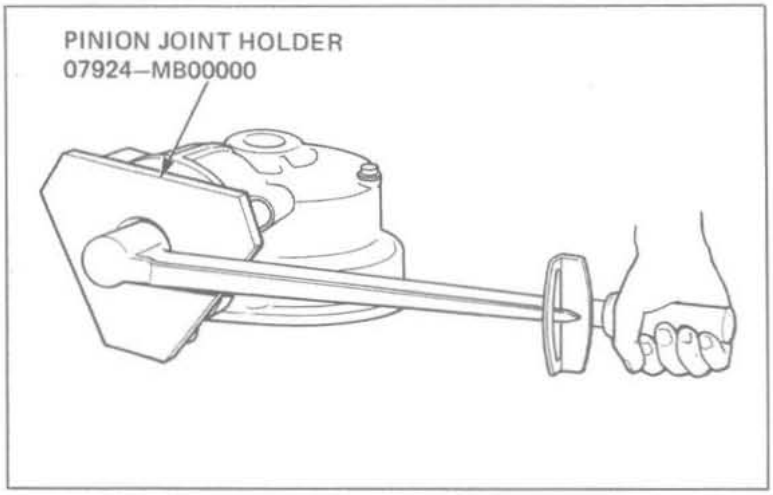

Make sure that the gear assembly rotates smoothly without binding by turning the pinion joint.

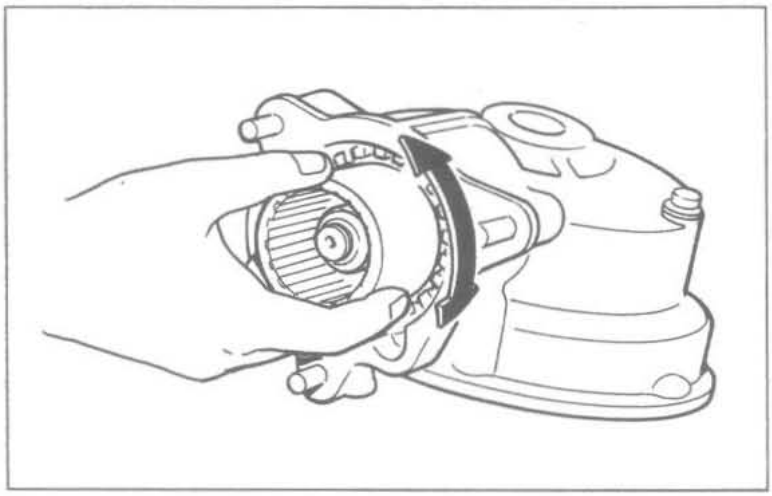

Stake the pinion nut to a minimum depth of 1 mm (0.04 in) into the hole in the pinion shaft.
Be careful not to damage the pinion shaft threads.

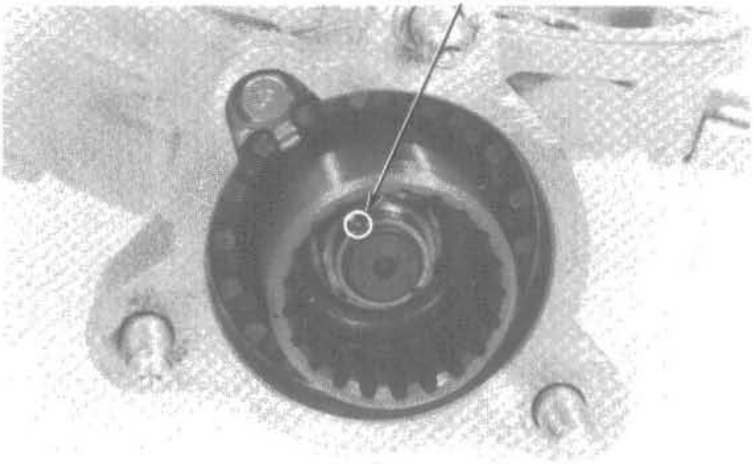

Install the dust guard plate and torque the bolts.
Install the distance collar.

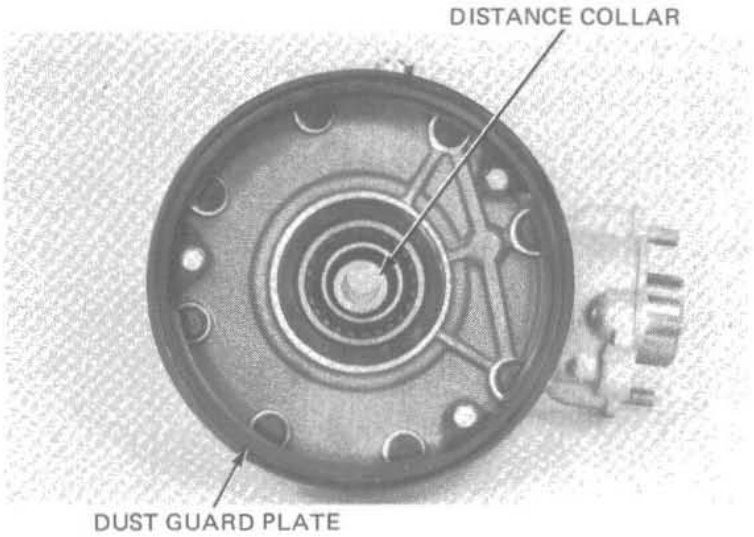

FINAL DRIVE INSTALLATION

Fill the damper case with the recommended type and amount of lubricant.

RECOMMENDED OIL: HYPOID GEAR OIL API, GL–5
Above 5°C/41°F: SAE #90
Below 5°C/41°F: SAE #80

OIL CAPACITY: 80 cc (2.7 oz)

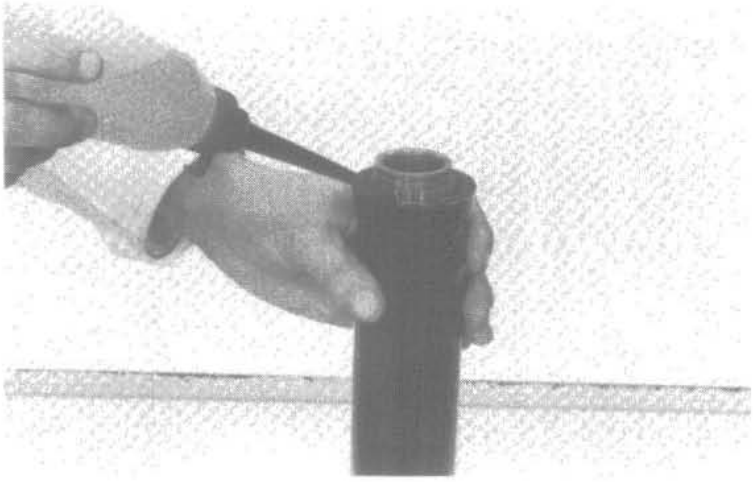

Date of Issue: May, 1982

Keep the damper case vertical and install the final drive gear case over the damper cam.

NOTE:

- Do not reinstall a stop ring onto the damper cam even if it was equipped with one. It is not needed for reassembly.
- Be careful not to damage the damper case oil seal during assembly.
- Do not let the gear case separate from the damper case or the oil will spill out.

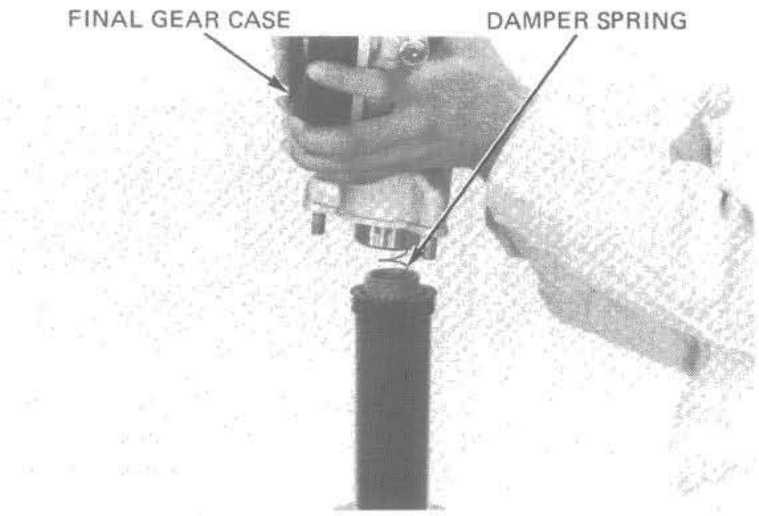

Make sure the u-joint is in line with the drive shaft. Then insert the drive shaft into the swing arm aligning its splines with the output shaft splines. Keep the gear case and damper case together or damper oil will leak out.

Attach the gear case onto the swing arm with the three attaching nuts. To ease axle installation, do not tighten the gear case nuts until after the axle is installed.

Install the rear wheel (page 17-7).

Tighten the axle nut.

TORQUE: 55–65 N·m (5.5–6.5 kg-m, 40–47 ft-lb)

Tighten the three final gear case attaching nuts.

TORQUE: 60–70 N·m (6.0–7.0 kg-m, 43–51 ft-lb)

Tighten the axle pinch bolt.

TORQUE: 20–30 N·m (2.0–3.0 kg-m, 14–22 ft-lb)

On the V45 Magna, install the left shock absorber (page 17-20).

Place the motorcycle on its center stand.

Make sure that the drain bolt is tightened.

Remove the oil filler cap and pour in the specified amount of recommended oil.

RECOMMENDED OIL	**Hypoid Gear Oil**
Over 5°C (41°F):	**SAE 90**
Below 5°C (41°F):	**SAE 80**

OIL CAPACITY:
150 cc (5.1 oz) Dry
110 cc (3.7 oz) Refill after draining

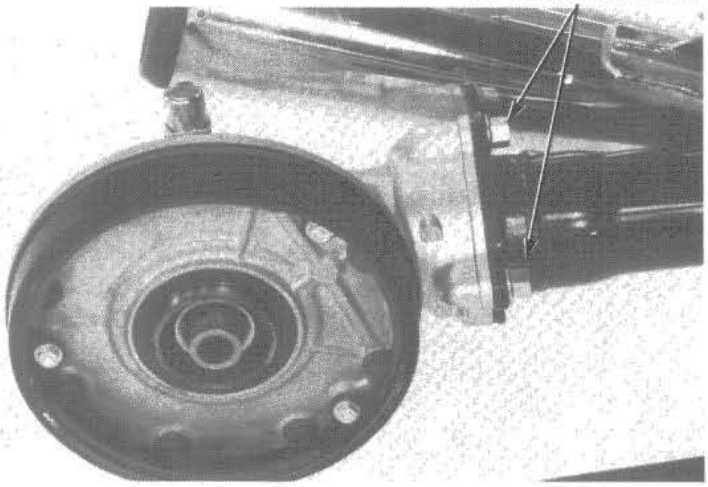

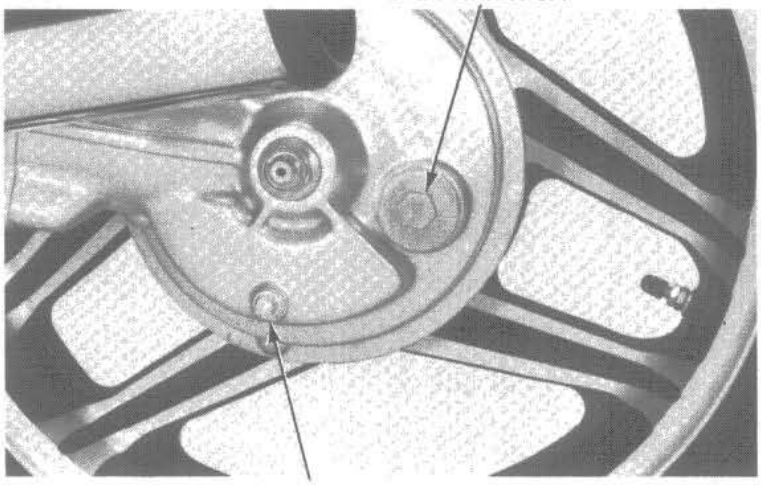

V45 SABRE

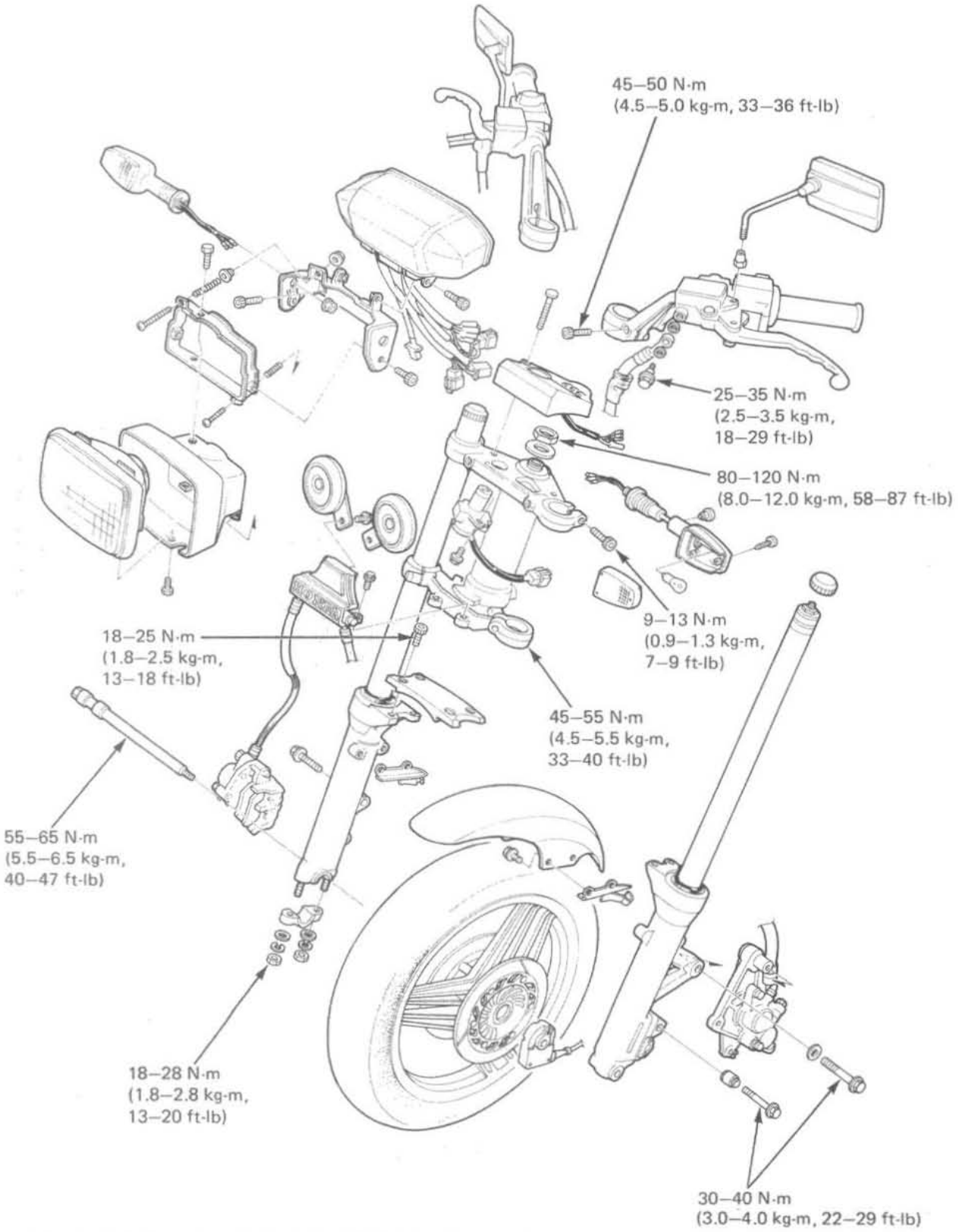

Date of Issue: May, 1982

15. FRONT WHEEL/SUSPENSION

V45 MAGNA

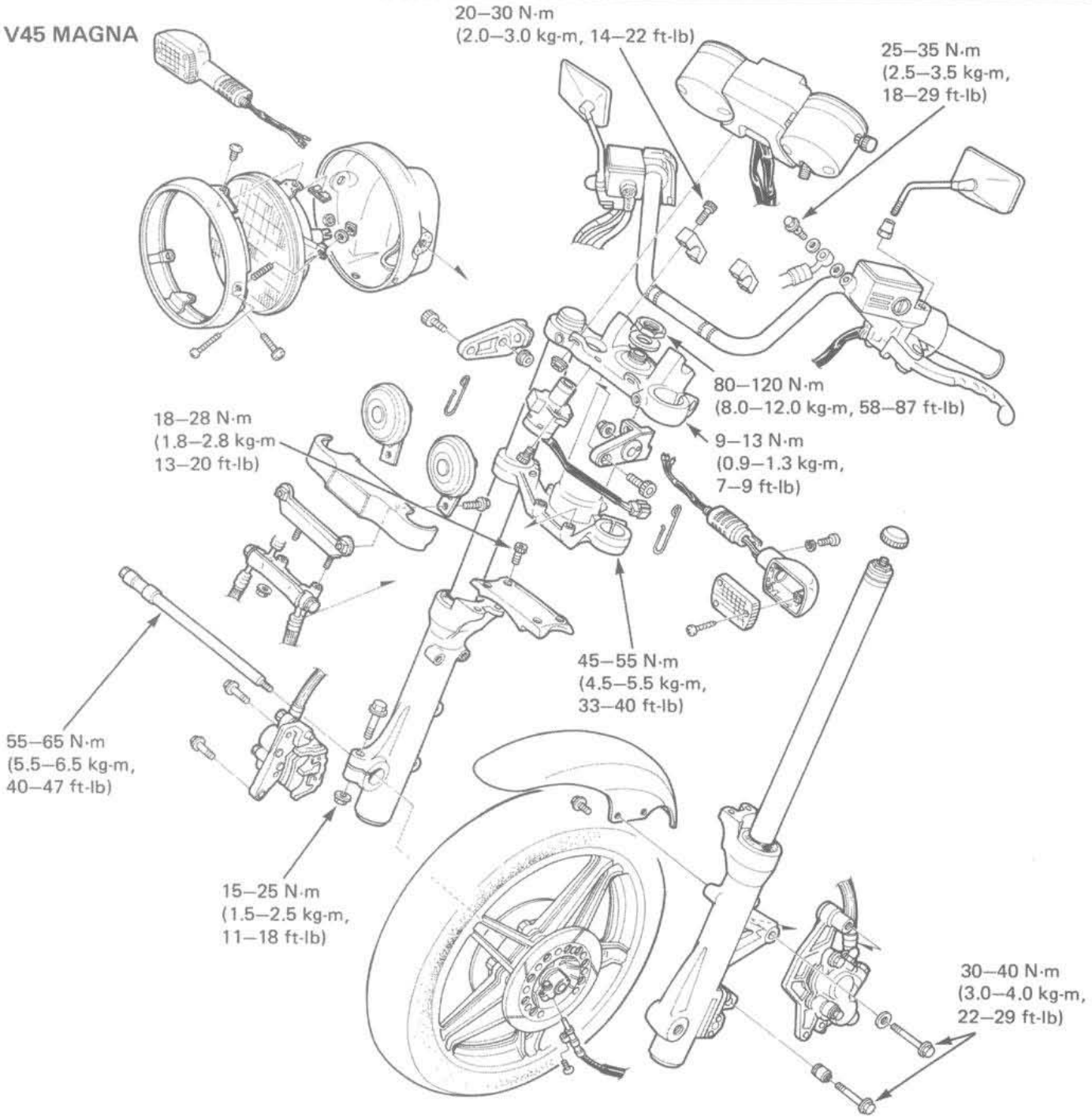

15

SERVICE INFORMATION

GENERAL

- A jack or other support is required to support the motorcycle.
- Never ride on the rim.

SPECIFICATIONS

		STANDARD	SERVICE LIMIT
Axle shaft runout		–	0.2 mm (0.01 in)
Front wheel rim runout	Radial	0.3 mm (0.01 in) max.	2.0 mm (0.08 in)
	Axial	0.3 mm (0.01 in) max.	2.0 mm (0.08 in)
Wheel bearing play		–	0.03 mm (0.001 in)
Fork spring free length		531.9 mm (20.94 in)	521 mm (20.5 in)
Fork tube runout		–	0.2 mm (0.01 in)
Front fork fluid capacity	V45 SABRE	Right 375 cc (12.7 oz), Left 390 cc (13.2 oz)	–
	V45 MAGNA	Right 390 cc (13.2 oz), Left 405 cc (13.7 oz)	–
Front fork air pressure	V45 SABRE	40–100 kPa (0.4–1.0 kg/cm^2, 6–14 psi)	–
	V45 MAGNA	40–100 kPa (0.4–1.0 kg/cm^2, 6–14 psi)	–

TORQUE VALUES

Handlebar upper holder (V45 MAGNA)	20–30 N·m (2.0–3.0 kg·m, 14–22 ft·lb)
Handlebar pinch bolt (V45 SABRE)	45–50 N·m (4.5–5.0 kg·m, 33–36 ft·lb)
Caliper mounting bolt	30–40 N·m (3.0–4.0 kg·m, 22–29 ft·lb)
Front axle	55–65 N·m (5.5–6.5 kg·m, 40–47 ft·lb)
Axle holder nut (V45 SABRE)	18–25 N·m (1.8–2.5 kg·m, 13–18 ft·lb)
Axle pinch bolt (V45 MAGNA)	15–25 N·m (1.5–2.5 kg·m, 11–18 ft·lb)
Front fork socket bolt	15–25 N·m (1.5–2.5 kg·m, 11–18 ft·lb)
Fork tube cap	15–30 N·m (1.5–3.0 kg·m, 11–22 ft·lb)
Steering bearing adjustment nut	14–16 N·m (1.4–1.6 kg·m, 10–12 ft·lb)
Steering stem nut	80–120 N·m (8.0–12.0 kg·m, 58–87 ft·lb)
Brake disc	25–30 N·m (2.5–3.0 kg·m, 18–22 ft·lb)
Front fork top pinch bolt	9–13 N·m (0.9–1.3 kg·m, 7–9 ft·lb)
Front fork bottom pinch bolt	45–55 N·m (4.5–5.5 kg·m, 33–40 ft·lb)

Date of Issue: May, 1982

TOOLS

Special

Hex. wrench, 6 mm	07917–3230000 or commercially available
Snap ring pliers	07914–3230000 or commercially available
Fork seal driver	07947–3710101
Steering stem socket	07916–3710100
Attachment	07946–3710700
Bearing race remover	07946–3710500
Bearing race remover	07953–4250002
Steering stem driver	07946–3710601 or 07946–3710600
Driver shaft disassembly tool B	07964–MB00200

Common

Driver	07749–0010000
Attachment, 42 x 47 mm	07746–0010300
Pilot, 15 mm	07746–0040300
Lock nut wrench, 30 x 32 mm	07716–0020400 or commercially available
Extension bar	07716–0020500 or commercially available

TROUBLESHOOTING

Hard steering
1. Steering bearing adjustment nut too tight
2. Faulty steering stem bearings
3. Damaged steering stem bearings
4. Insufficient tire pressure

Steers to one side or does not track straight
1. Unevenly adjusted right and left shock absorbers (V45 MAGNA)
2. Bent front forks
3. Bent front axle; wheel installed incorrectly

Front wheel wobbling
1. Bent rim
2. Worn front wheel bearings
3. Faulty tire
4. Axle nut tightened properly

Soft suspension
1. Weak for springs
2. Insufficient fluid in front forks
3. Front fork air pressure incorrect

Hard suspension
1. Incorrect fluid weight in front forks
2. Front fork air pressure incorrect
3. Bent fork tubes
4. Clogged fluid passage
5. Clogged anti-dive orifice

Front suspension noise
1. Worn slider or guide bushings
2. Insufficient fluid in forks
3. Loose front fork fasteners
4. Lack of grease in speedometer gearbox

HEADLIGHT (V45 SABRE)

REMOVAL

Remove the two headlight mounting screws.
Disconnect the wire coupler and remove the headlight.

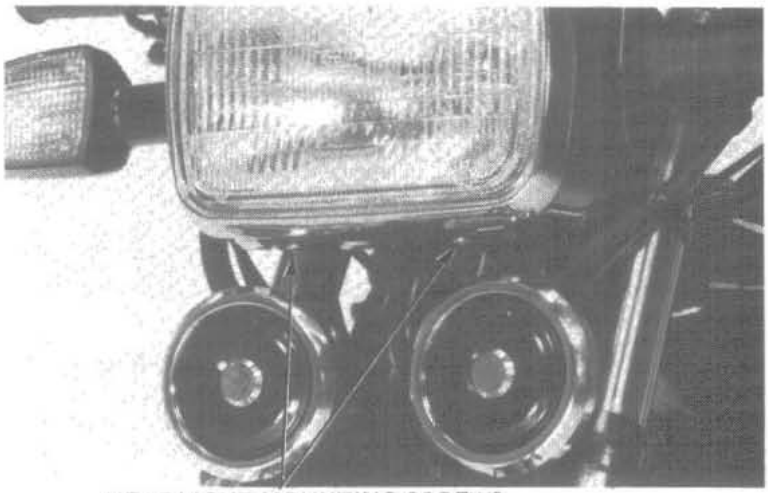

HEADLIGHT MOUNTING SCREWS

CASE REMOVAL/INSTALLATION

Remove the vertical adjustment screw lock nut.
Remove the headlight case mounts and headlight case.
Install the headlight case in the reverse order of removal.
After installation, adjust the headlight aim (page 3-17).

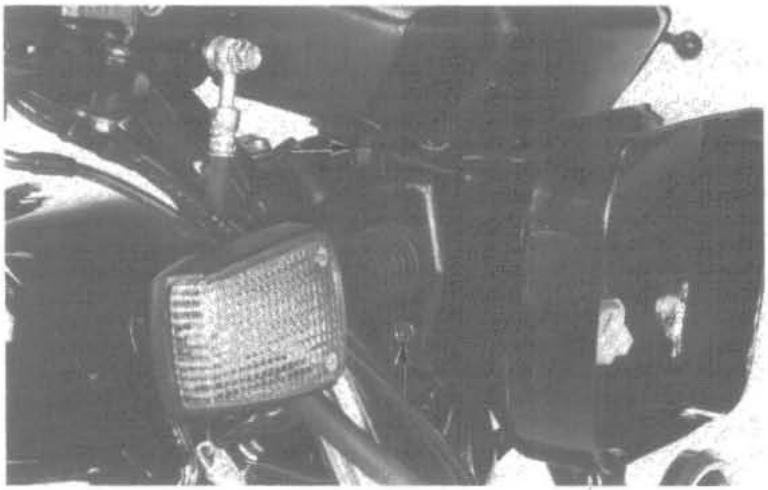

BRACKET REMOVAL/INSTALLATION

Disconnect the instrument couplers and front turn signal wire connectors.
Remove the headlight bracket socket bolts, and bracket/turn signal assembly.
Install the headlight bracket in the reverse order of removal.

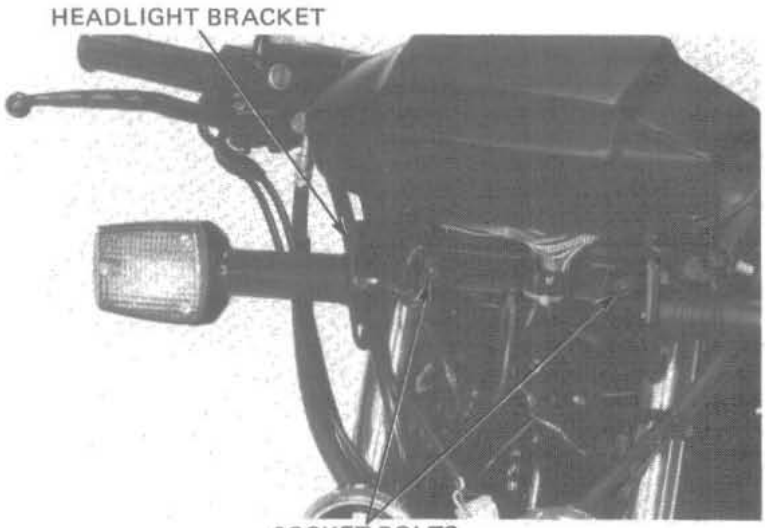

Date of Issue: January, 1982

DISASSEMBLY/ASSEMBLY

Remove the two sealed beam unit retaining screws, and sealed beam unit.
Assemble the headlight in the reverse order of disassembly.

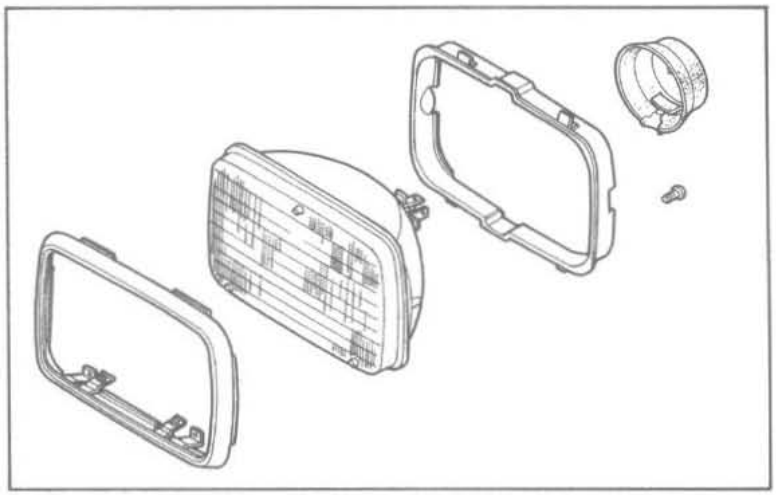

HEADLIGHT (V45 MAGNA)

REMOVAL

Remove the two headlight mounting screws.
Disconnect the wire coupler and remove the headlight.

HEADLIGHT MOUNTING SCREW

CASE REMOVAL/INSTALLATION

Remove the headlight case mounts and headlight case.
Install the headlight case in the reverse order of removal.

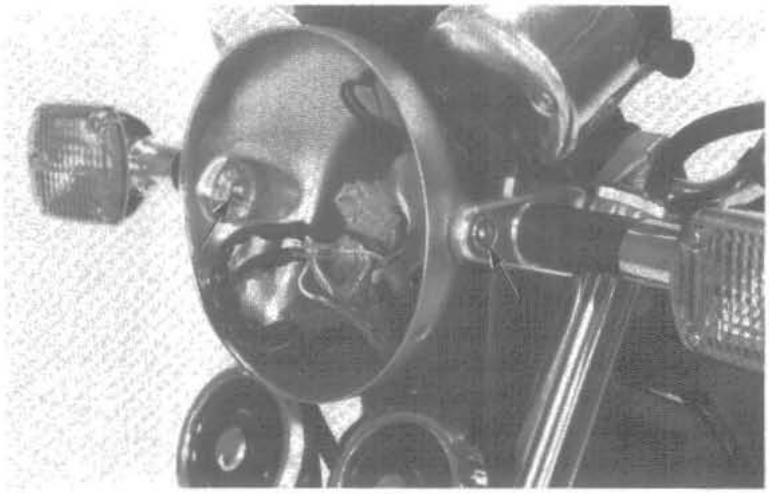

BRACKET REMOVAL/INSTALLATION

Disconnect the front turn signal wire connectors.
Remove the headlight bracket mount bolts and bracket/turn signal assemblies.
Install the headlight bracket in the reverse order of removal.

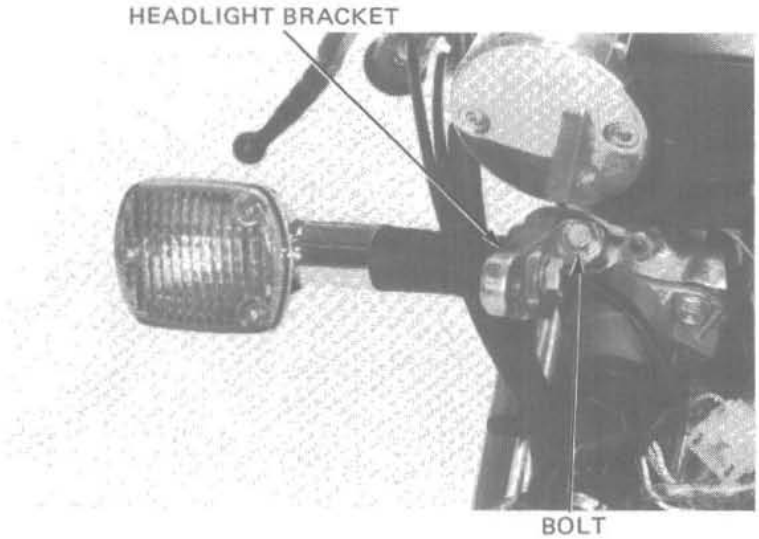

DISASSEMBLY/ASSEMBLY

Remove the retaining screws, horizontal adjusting screw and sealed beam unit from the rim.
Assemble the headlight in the reverse order of disassembly.
After installation, adjust the headlight aim (page 3-18).

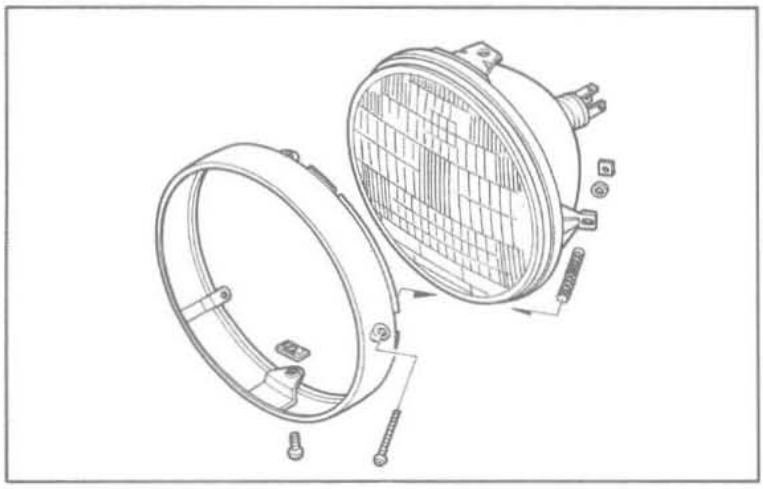

IGNITION SWITCH

REMOVAL/INSTALLATION

Remove the headlight and headlight case.
Disconnect the ignition switch wire coupler.
Remove the ignition switch mounting bolts, and ignition switch.
Install the ignition switch in the reverse order of removal.

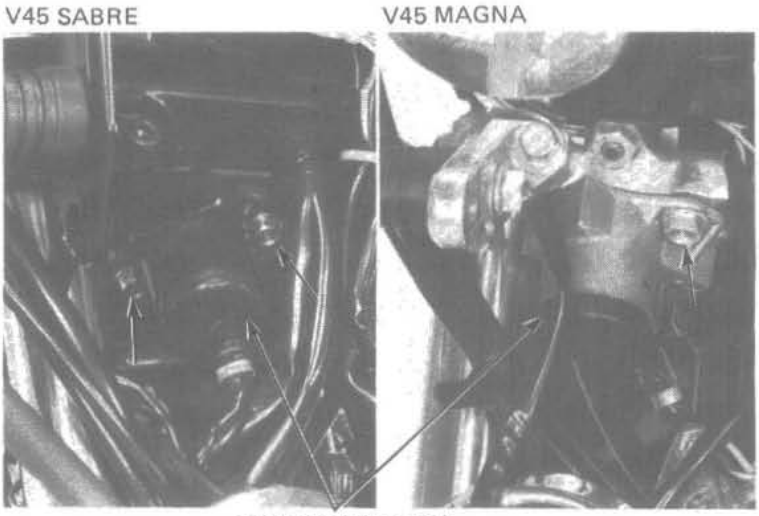

DISASSEMBLY/ASSEMBLY

Open the wire clamp.

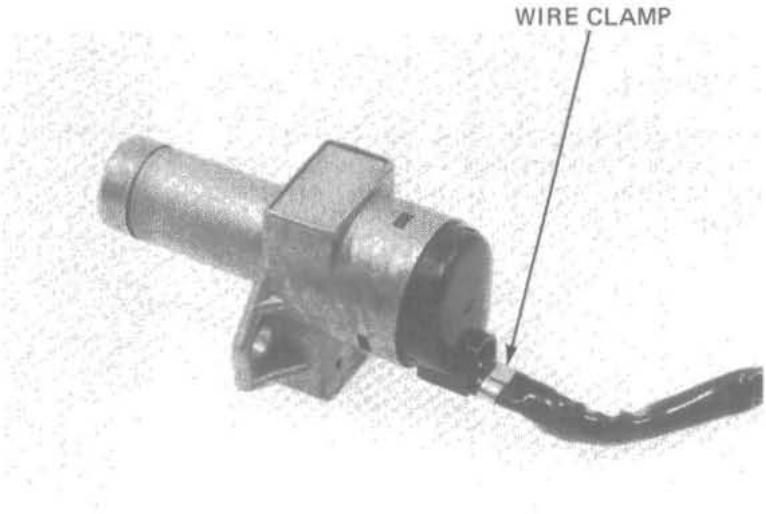

Insert the ignition key and turn it to between the ON and OFF detent positions.

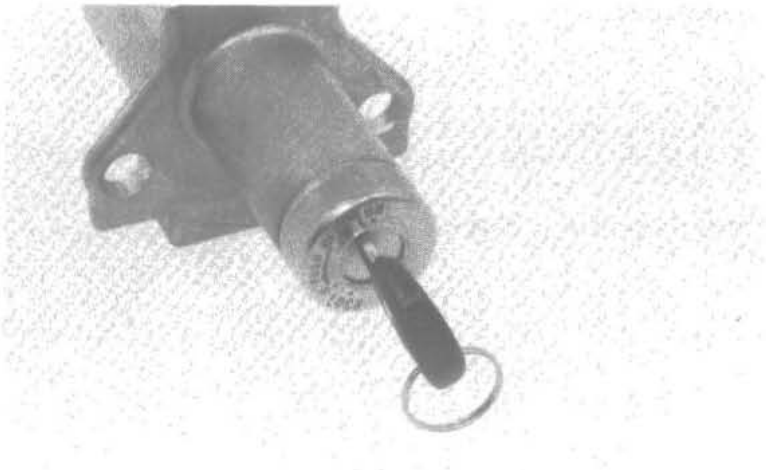

Push in the lugs in the slots and pull the contact base from the switch.
Assemble the ignition switch in the reverse order of disassembly.

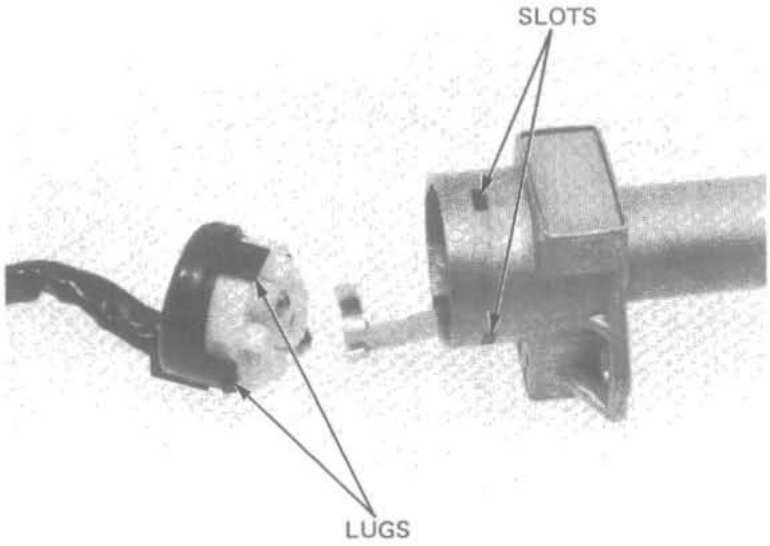

INSTRUMENTS (V45 SABRE)

REMOVAL

Remove the headlight and case (page 15-4).
Disconnect the instrument wire couplers, remove the instrument mount socket bolts, and instruments.

SOCKET BOLT

DISASSEMBLY

NOTE:

> Do not disassemble any parts excluding the bulbs, instrument cover and panel.

Remove the four instrument cover screws, and cover.

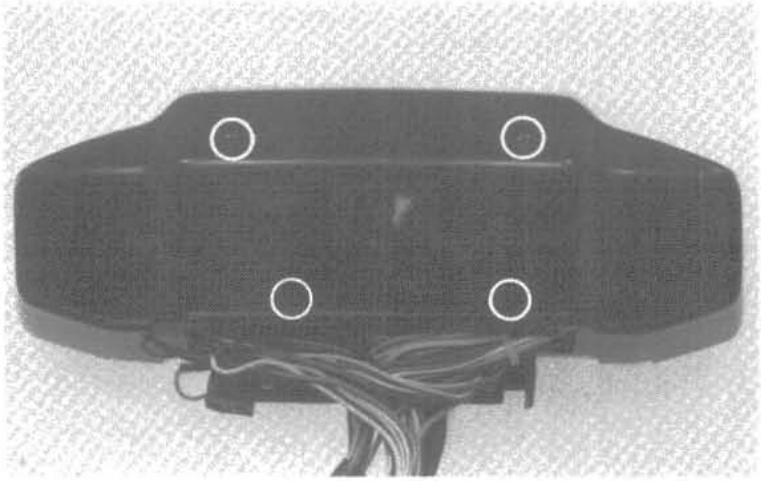

Remove the instrument bulb sockets.
Replace any burnt out bulbs.
After installing a new bulb, check for continuity. If the bulb does not light, inspect the wiring for an open or short circuit.

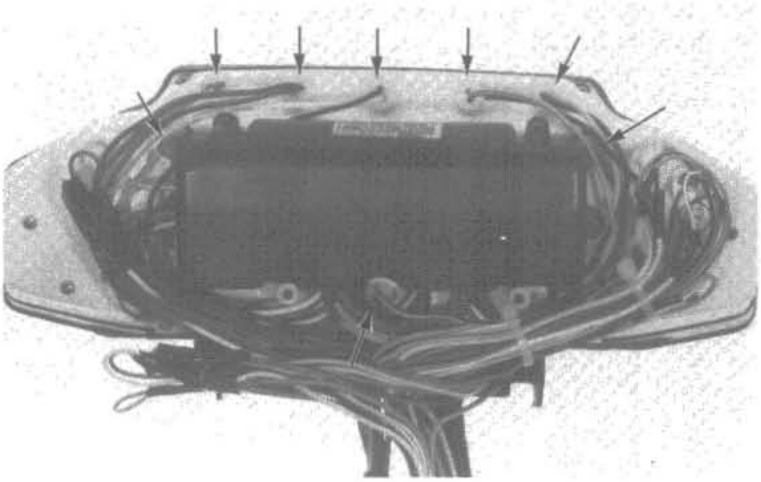

Date of Issue: January, 1982

INSTRUMENT ASSEMBLY/ INSTALLATION

Assemble and install the instruments in the reverse order of disassembly and removal.

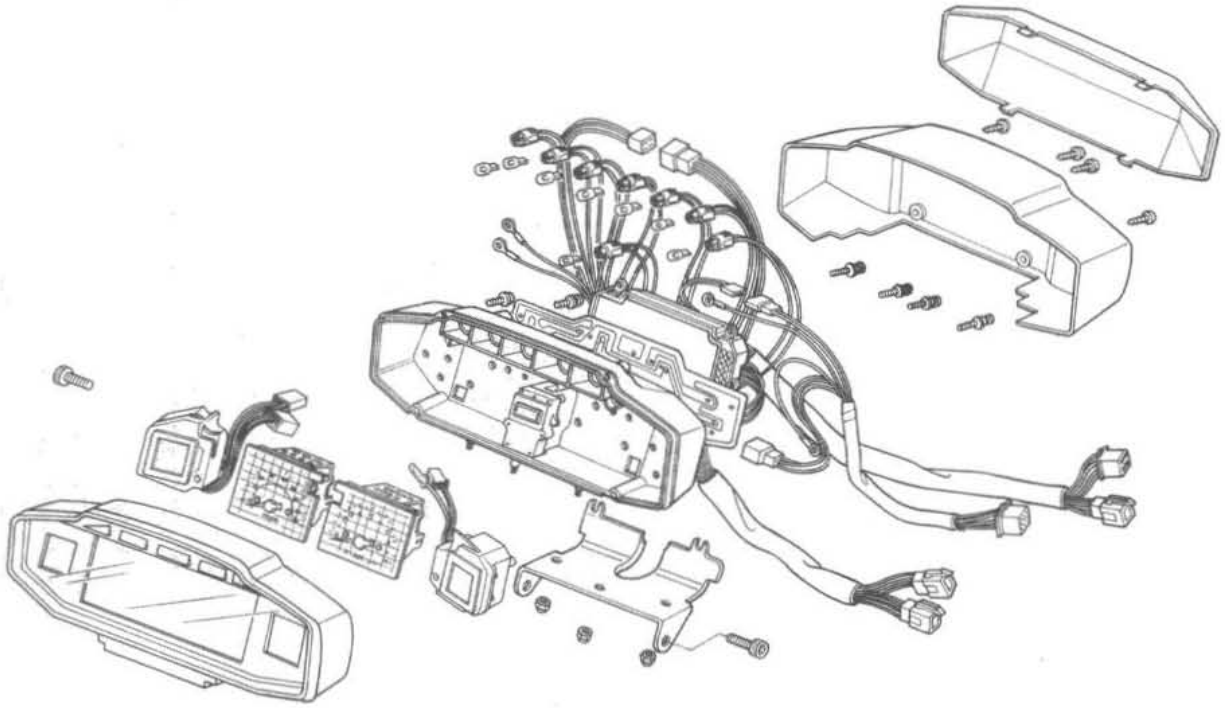

ODOMETER REMOVAL

Disconnect the odometer wire couplers.
Remove the odometer setting screws.

Remove the turn signal angle sensor attaching screws.

Remove the angle sensor and disconnect the wire connectors.
Remove the odometer.

ODOMETER BULB REPLACEMENT

Remove the cover and replace the bulb.
After installing a new bulb, check for continuity. If bulb does not light, inspect the wiring for an open or short circuit.

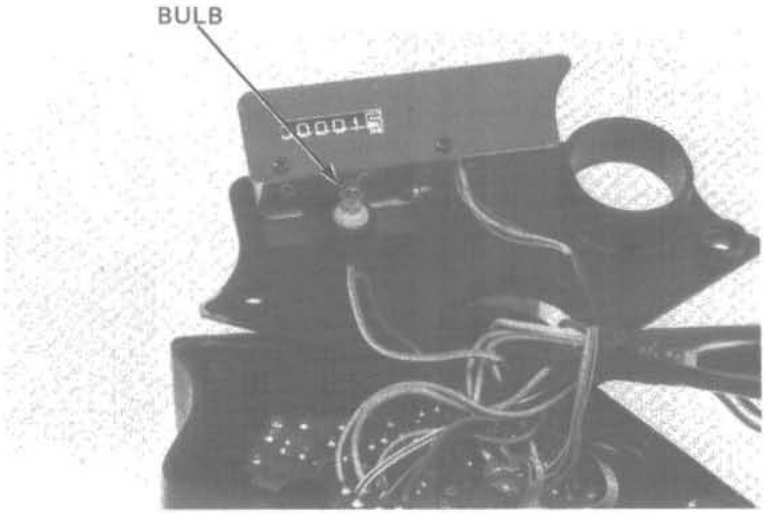

ODOMETER DISASSEMBLY

Remove the two odometer setting screws and open the cover.

Remove the plinted circuit board attaching screws.

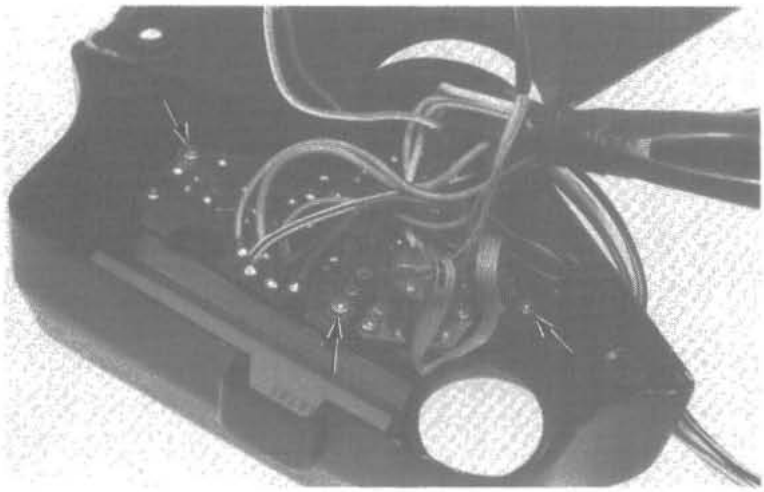

Remove the clock set switch attaching screws. Disconnect the odometer coupler from the printed circuit board.

ASSEMBLY/INSTALLATION

Assemble and install the odometer in the reverse order of disassembly and removal.

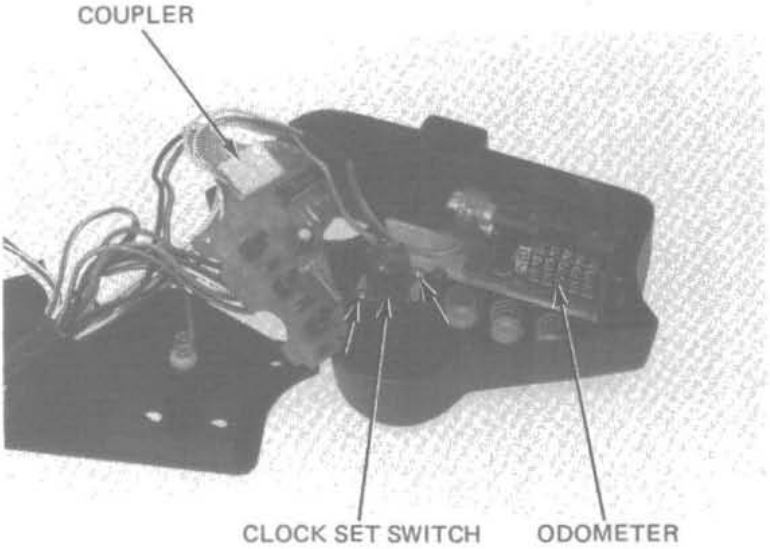

INSTRUMENTS (V45 MAGNA)

INDICATOR LIGHT BULB REPLACEMENT

Remove the headlight and case (page 15-5). Remove the instrument lower cover attaching screws, and lower cover.

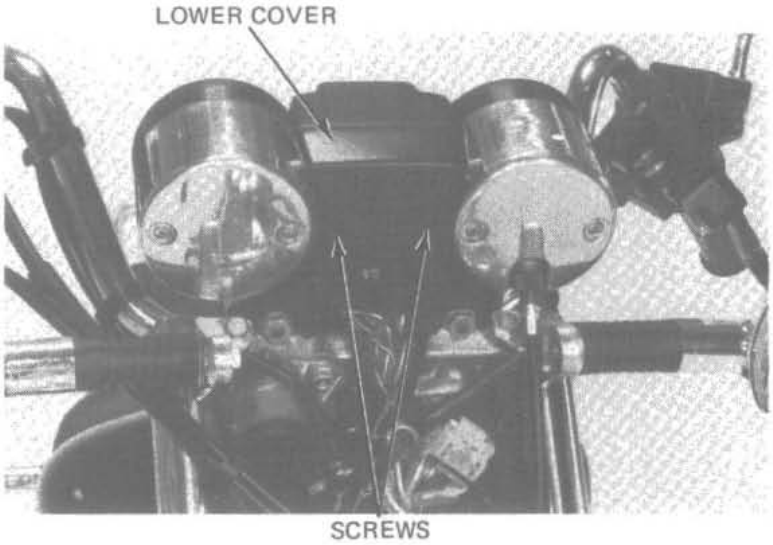

Remove the upper cover attaching screws, and upper cover.

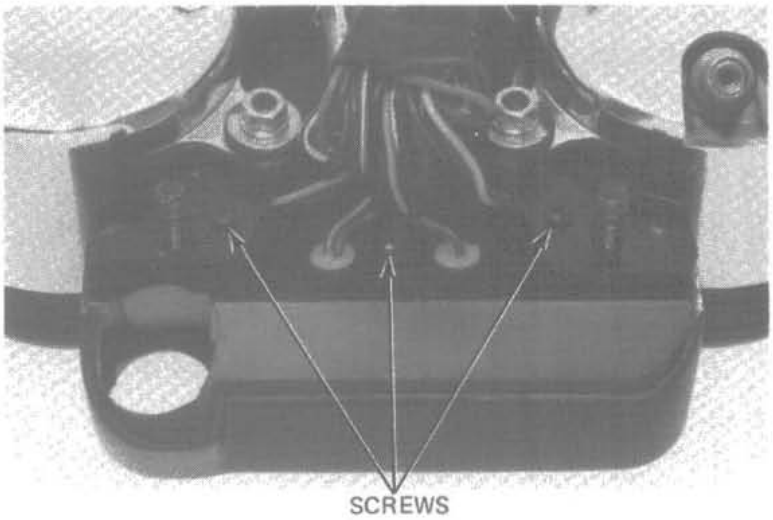

Replace the bulb.
After installing a new bulb, check for continuity. If the bulb does not light, inspect the wiring for an open or short circuit, or check for loose connections.

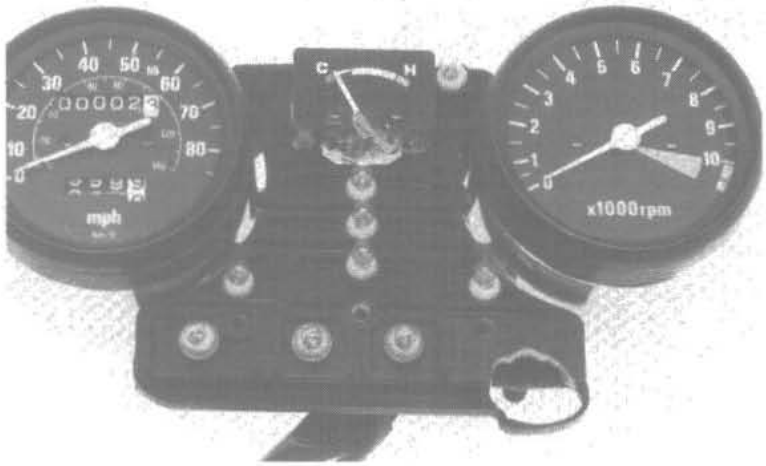

REMOVAL

Remove the headlight and case (page 15-5).
Disconnect the speedometer cable from the instruments.
Disconnect the instrument wire couplers.
Remove the instrument mounting nuts, and instruments.

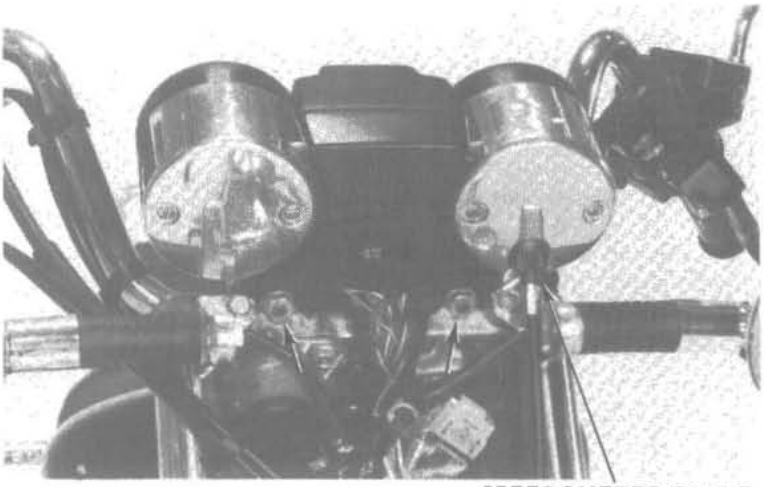

DISASSEMBLY

Remove the instrument lower cover.

CAUTION:

Do not leave the instruments upside down or damping fluid will leak onto the inside of the lens.

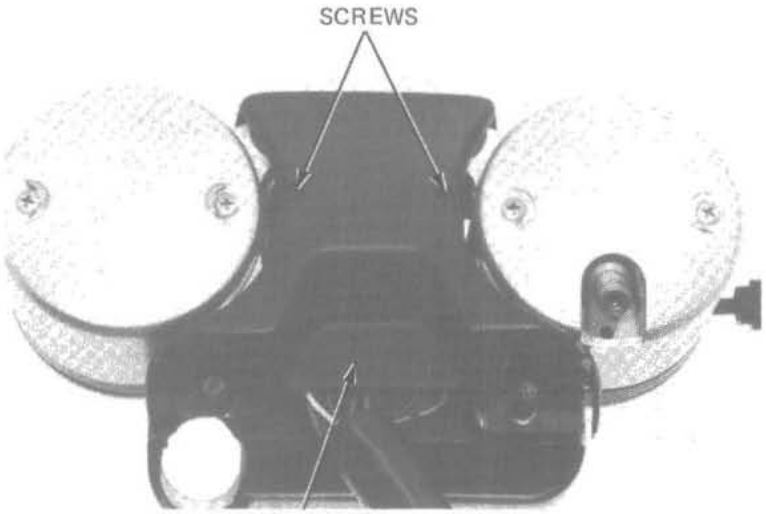

Remove the meter setting nuts, and meters.
Remove the meter lower cover screws.

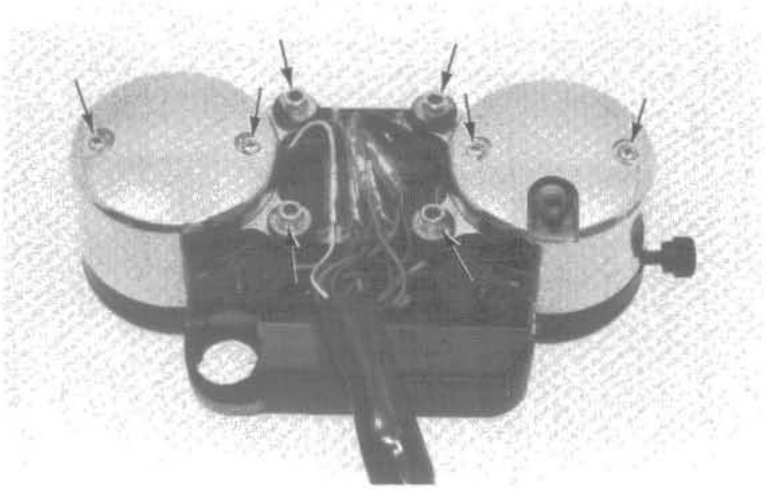

Replace the bulb.
If a replacement bulb does not light, check the wiring for a short or open circuit, or check for loose connections.

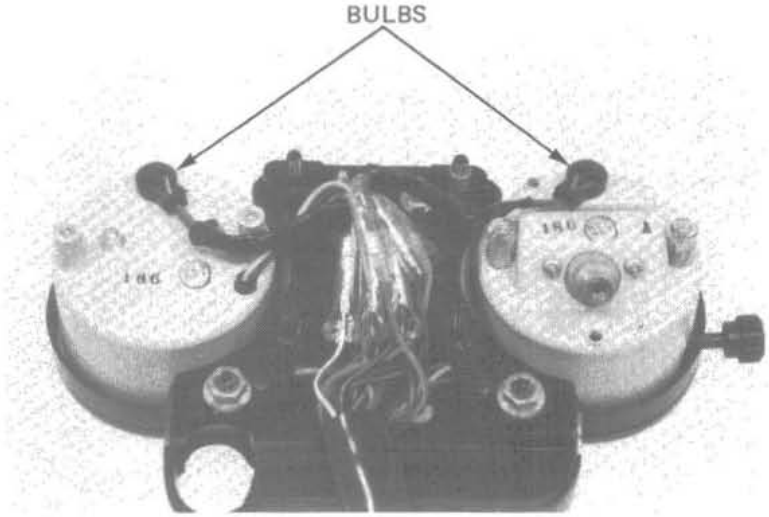

ASSEMBLY/INSTALLATION

Lubricate the speedometer cable before reconnecting.
Assemble and install the instruments in the reverse order of disassembly and removal.

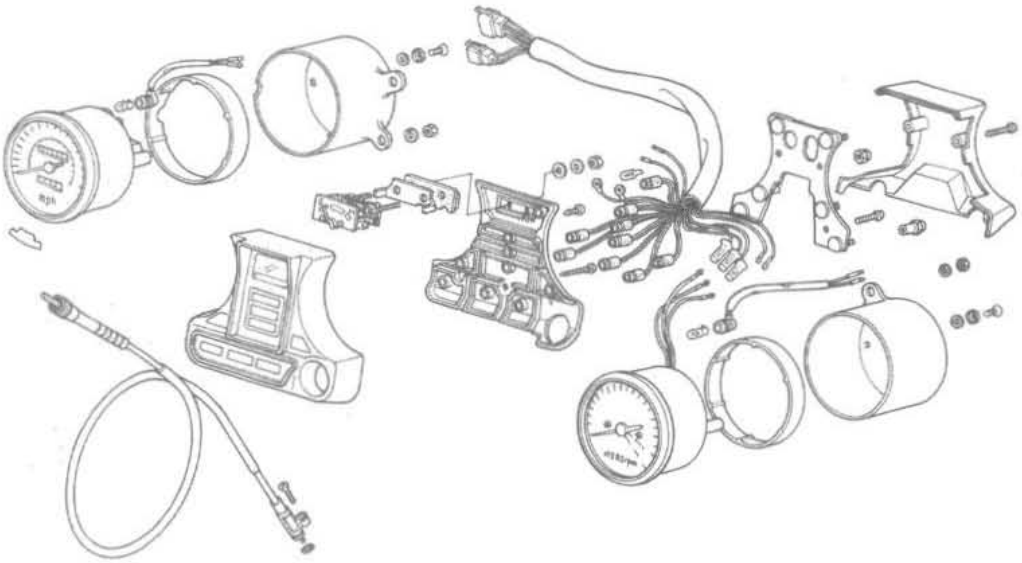

HANDLEBARS

REMOVAL

Disconnect the clutch switch wires.
Remove the left handlebar switch.

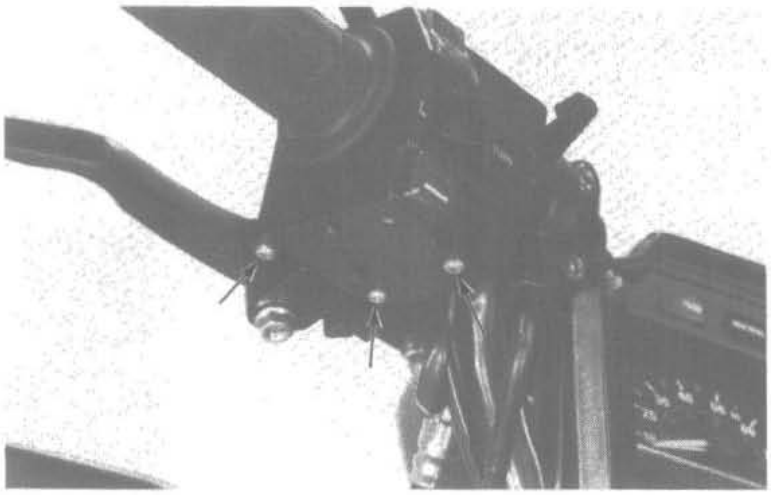

Remove the clutch master cylinder.

Disconnect the choke cable from the choke lever.

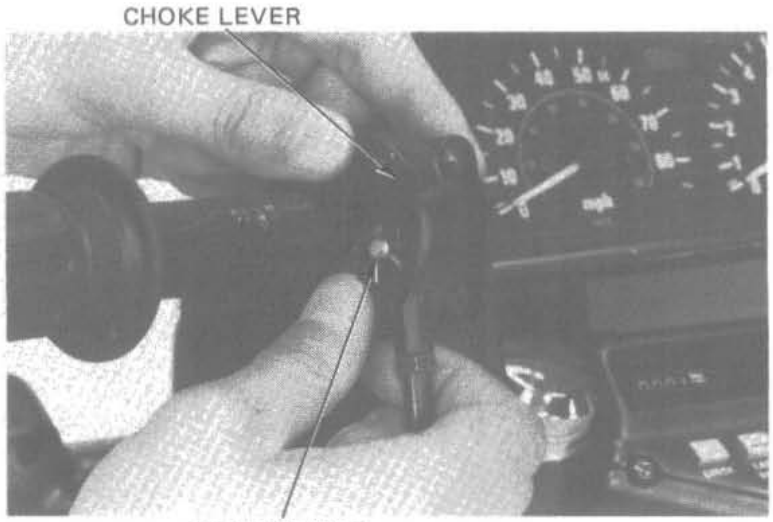

Remove the right handlebar switch and disconnect the front brake switch wires.

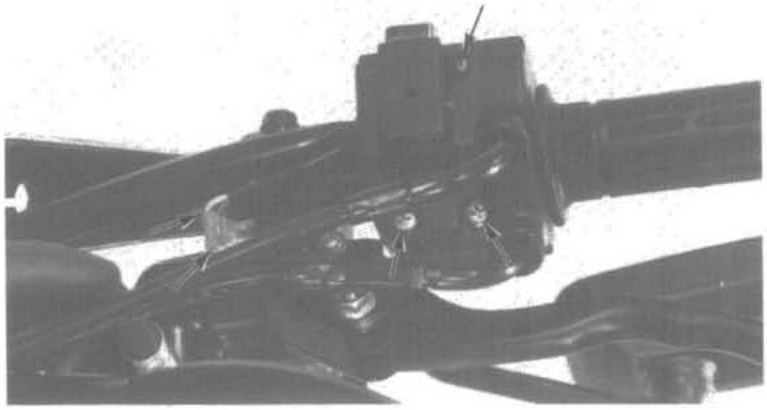

Remove the brake master cylinder.

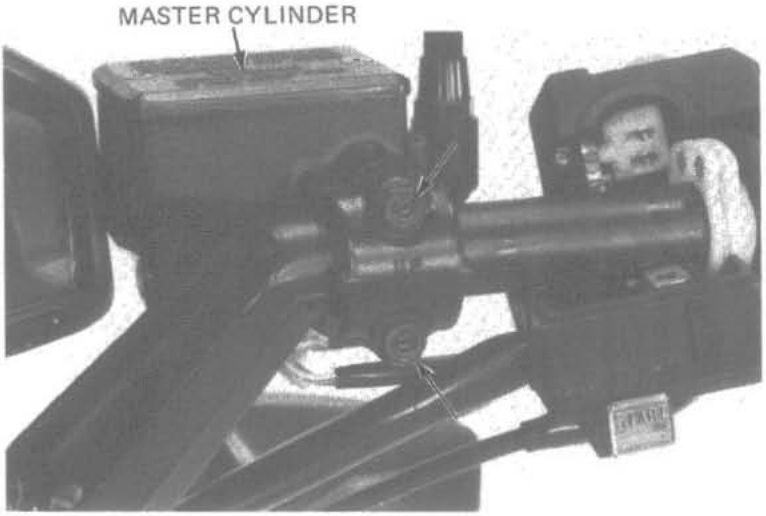

On the V45 SABRE, loosen the handlbar pinch bolt and remove the handlebar.

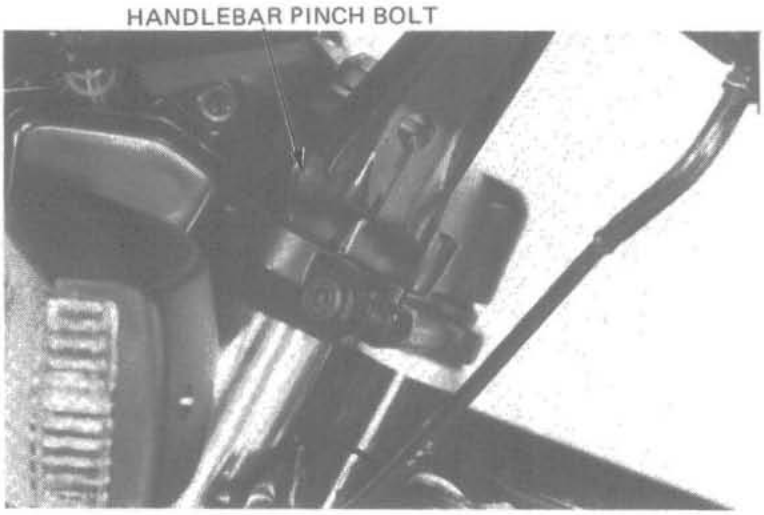

Date of Issue: May, 1982

On the V45 MAGNA, remove the handlebar upper holders, and handlebars.

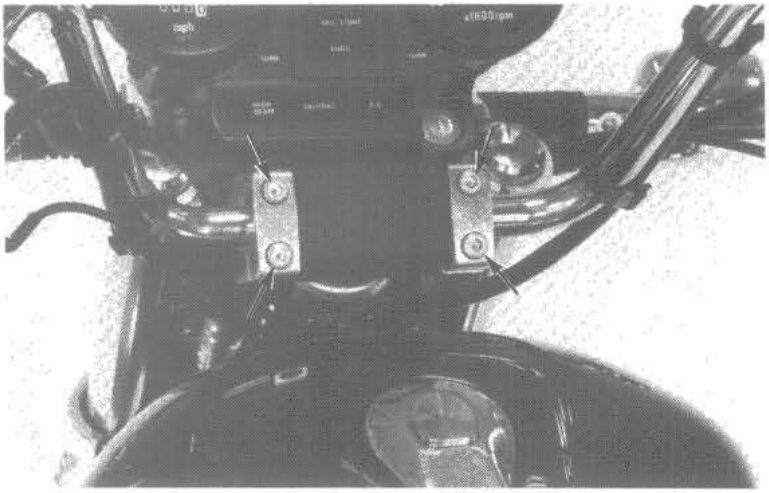

INSTALLATION

Apply grease to the throttle grip sliding surface and slide the throttle grip over the handlebar.

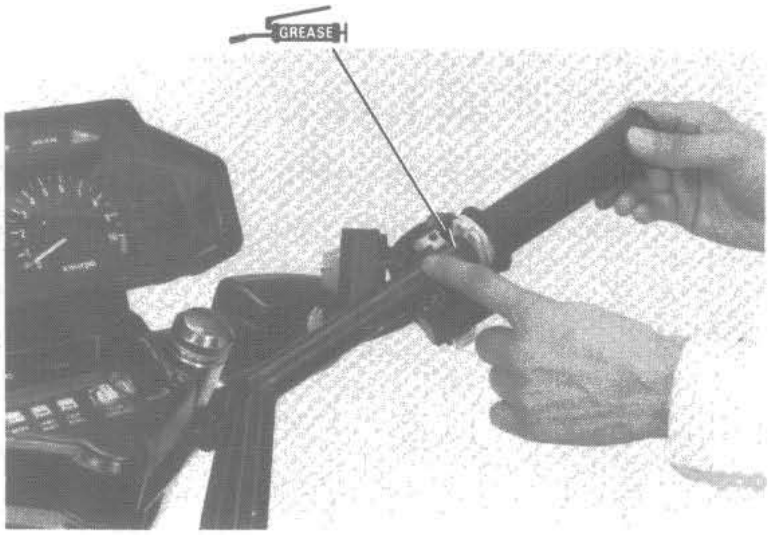

On the V45 SABRE, install the handlebars and tighten the pinch bolts.

TORQUE: 20–30 N·m (2.0–3.0 kg-m, 14–22 ft-lb)

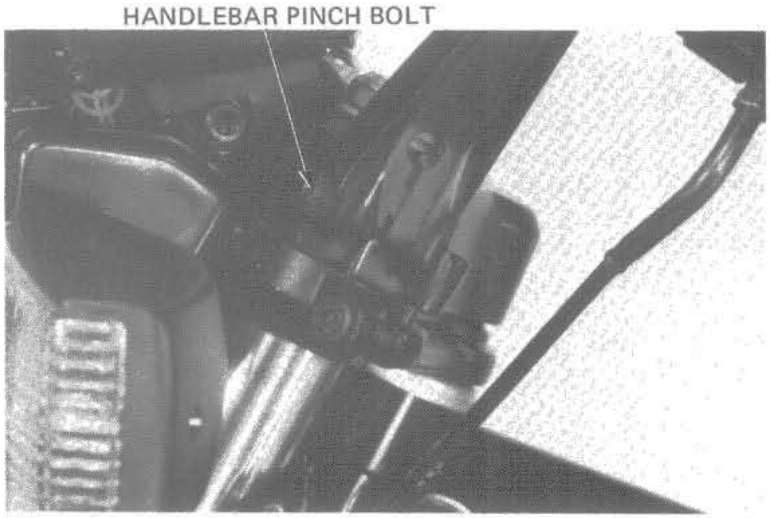

On the V45 MAGNA, place the handlebar onto the lower holder aligning the punch mark with the upper face of the lower holder.
Install the upper holders, tighten the forward bolts first, then tighten the rear bolts.

NOTE: 20–30 N·m (2.0–3.0 kg-m, 14–22 ft-lb)

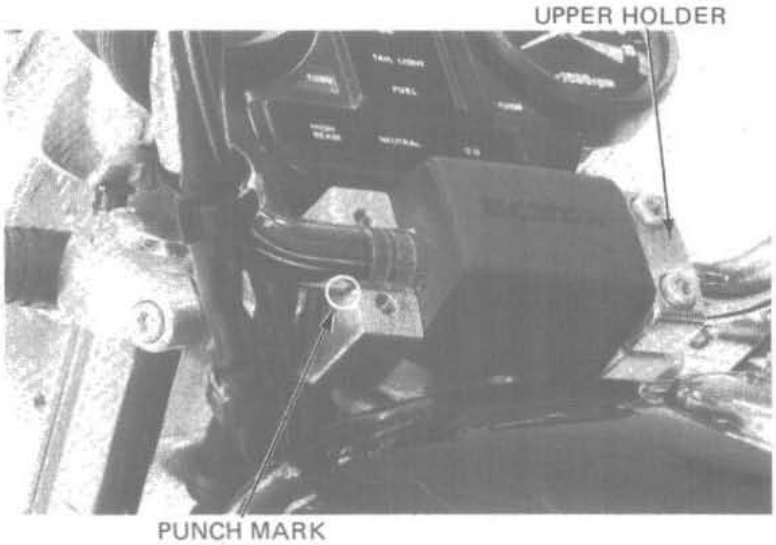

Install the front brake master cylinder with the "UP" mark on the holder facing up. Align the end of the holder with the handlebar punch mark (V45 MAGNA).
Tighten the upper bolt first, then the lower bolt.

Install the right handlebar switch and connect the brake light switch wires.

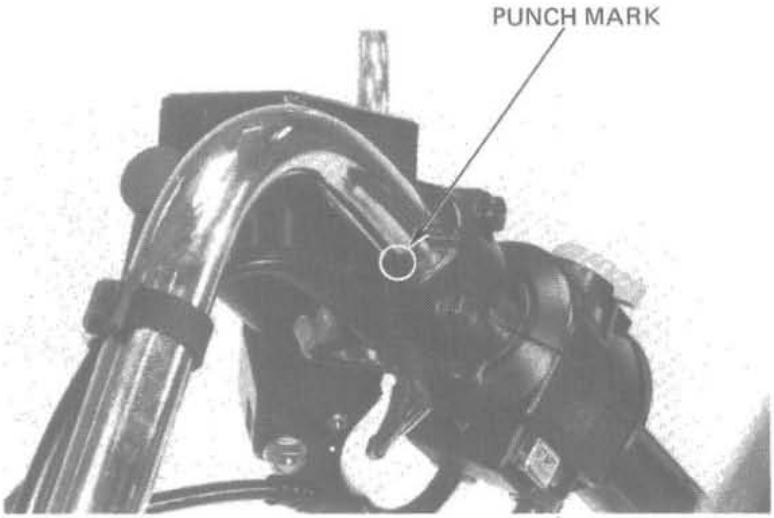

Connect the choke cable to the choke lever and install the clutch master cylinder.
Align the end of the holder with the punch mark on the handlebar (V45 MAGNA).
Tighten the upper bolt first, then the lower bolt.
Install the left handlebar switch and connect the clutch switch wires.
Route the switch wires properly (page 1-9).

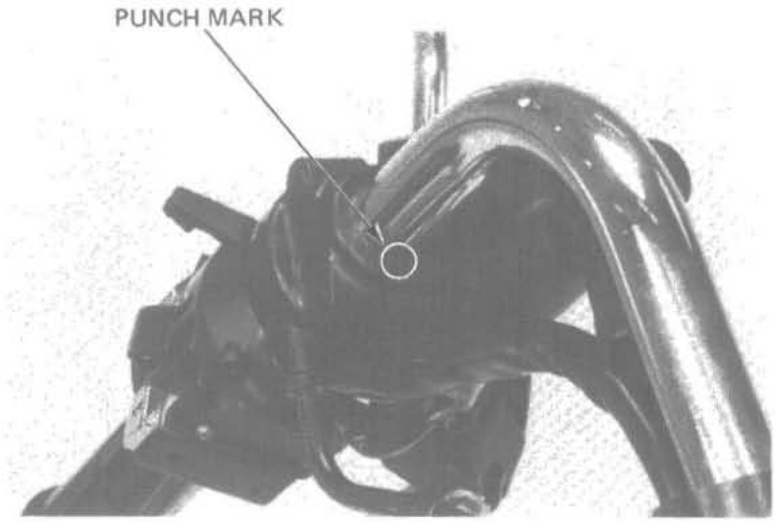

Date of Issue: October, 1982

FRONT WHEEL

REMOVAL

On the V45 SABRE, remove the speed sensor set screw and sensor.
On the V45 MAGNA, remove the speedometer cable set screw and the speedometer cable.

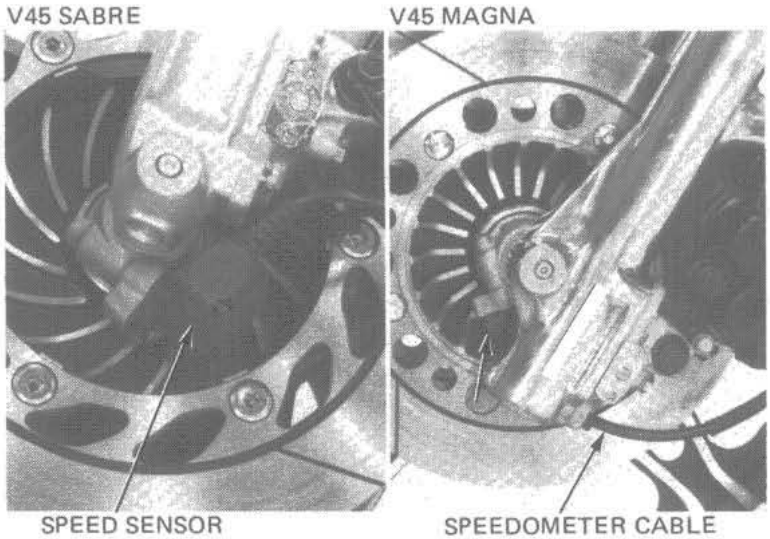

Remove the right brake caliper mounting bolts and remove the caliper.

NOTE:

> Do not operate the front brake lever after removing the caliper. To do so will cause difficulty in fitting the brake disc between the brake pads.

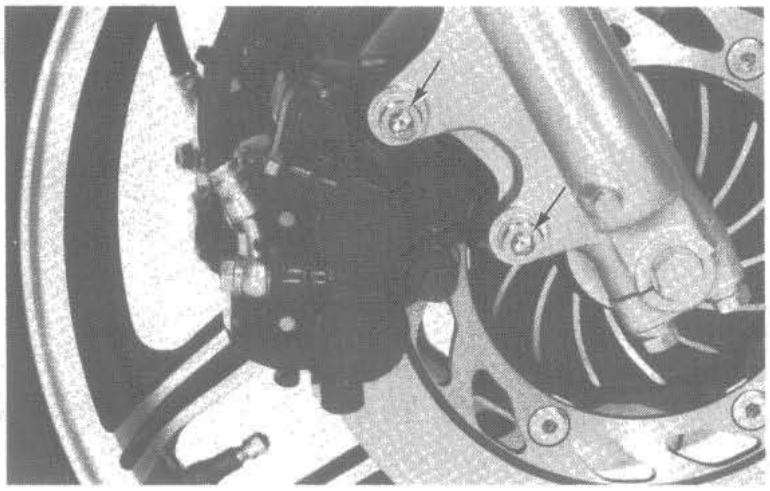

On the V45 SABRE, remove the axle holder nuts and holder.
On the V45 MAGNA, loosen the axle pinch bolt.
Loosen and remove the front axle.
Remove the front wheel.

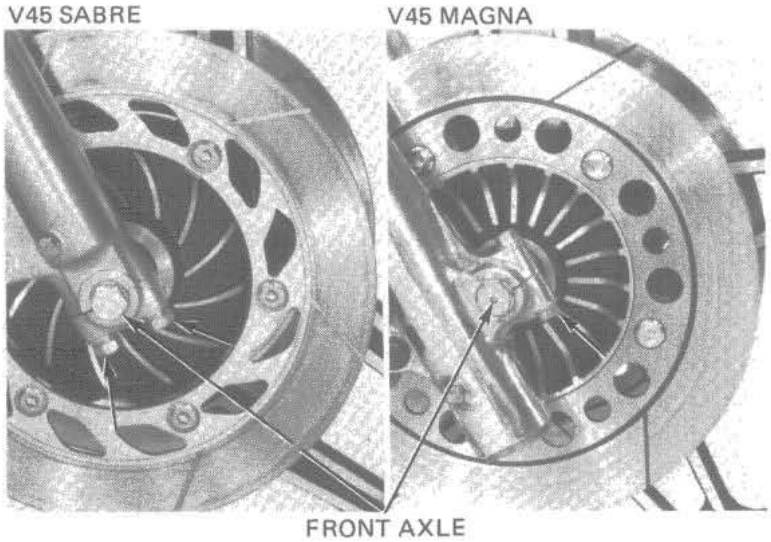

DISASSEMBLY

Remove the brake disc mounting bolts, and discs.

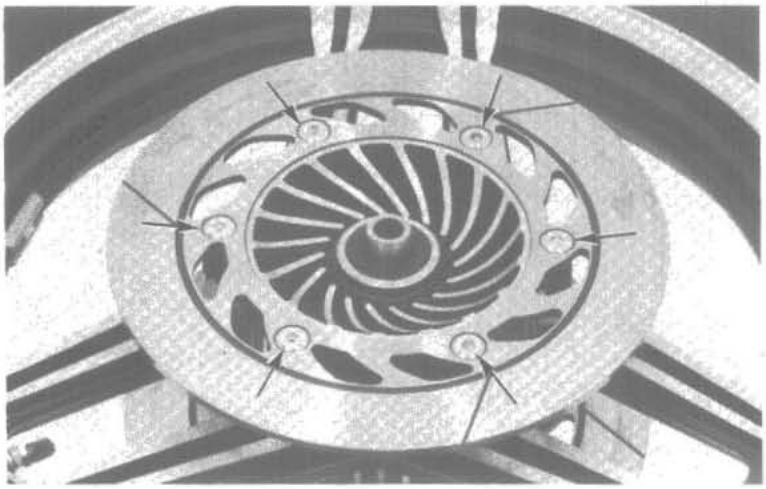

Remove the side collar and right seal.

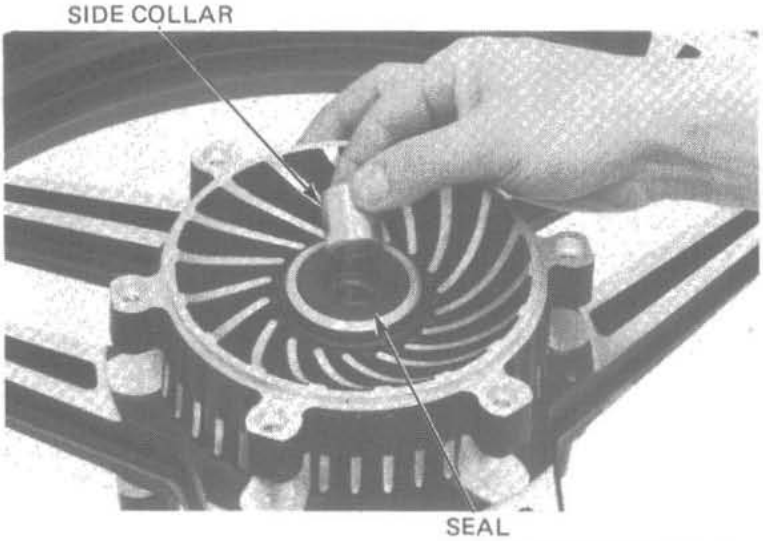

Remove the left seal and speedometer gear retainer. Remove the wheel bearings and the distance collar from the hub.

NOTE:

> If the bearings are removed, they should be replaced with new ones.

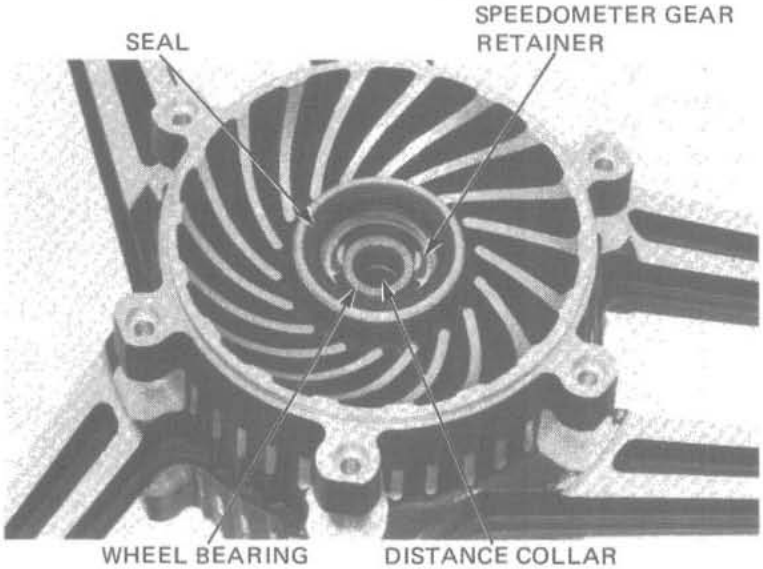

Date of Issue: May, 1982

WHEEL BEARING INSPECTION

Check wheel bearing play by placing the wheel in a truing stand and spinning the wheel by hand. Replace the bearings with new ones if they are noisy or have excessive play.

SERVICE LIMIT: 0.03 mm (0.001 in)

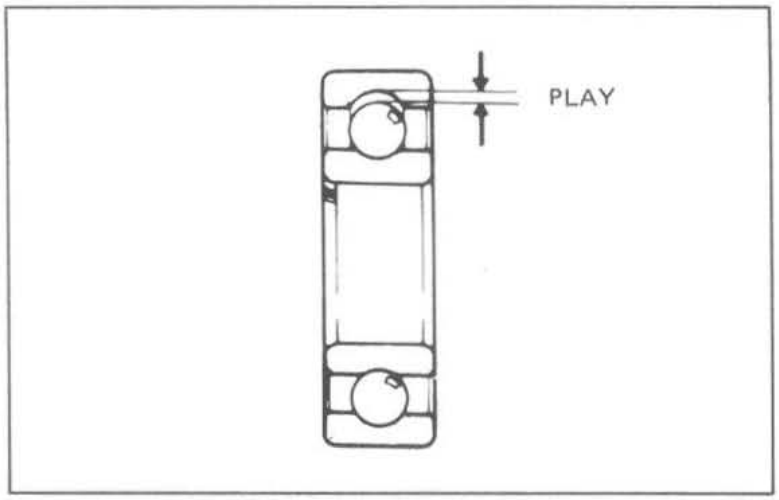

WHEEL INSPECTION

Check the rim runout by placing the wheel in a truing stand. Spin the wheel slowly and read the runout using a dial indicator.

SERVICE LIMITS:
RADIAL RUNOUT: 2.0 mm (0.08 in)
AXIAL RUNOUT: 2.0 mm (0.08 in)

NOTE:

> The wheel cannot be repaired and must be replaced with a new one if the service limits are exceeded.

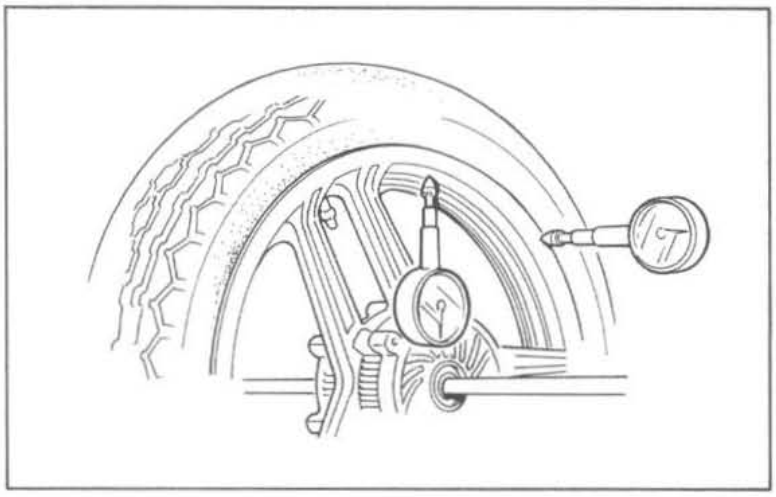

AXLE INSPECTION

Set the axle in V blocks and measure the runout. The actual runout is 1/2 of the total indicator reading.

SERVICE LIMIT: 0.2 mm (0.01 in)

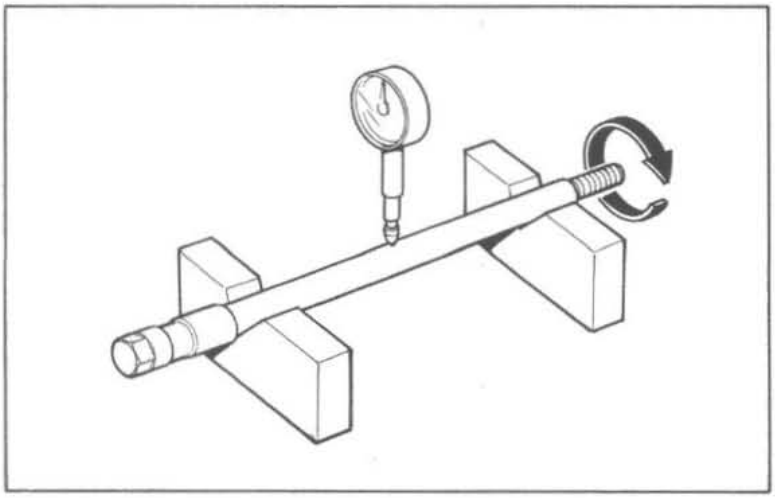

ASSEMBLY

WARNING

Do not get grease on the brake disc or stopping power will be reduced.

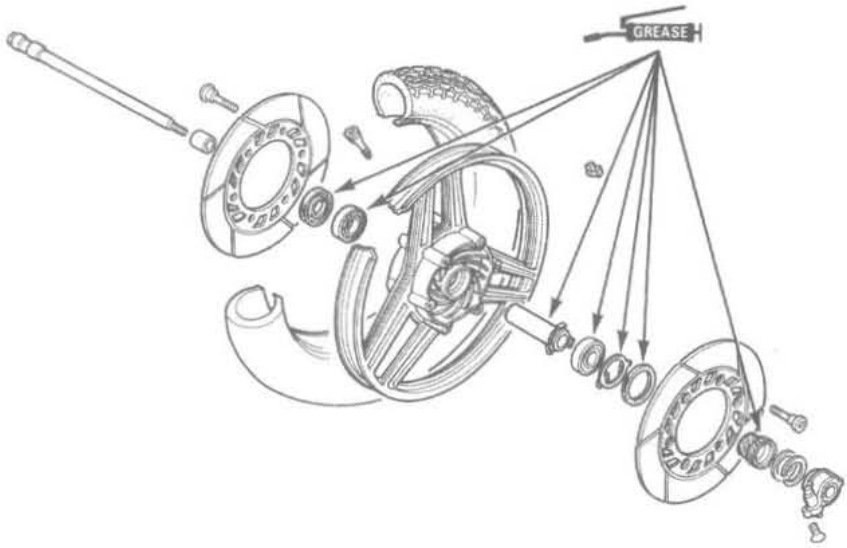

NOTE:

- The cast wheel has no rim band.
- The front wheel uses a tubeless tire. For tubeless tire repair, refer to the HONDA TUBELESS TIRE MANUAL.

Pack all bearing cavities with grease.
Drive in the right bearing first and press the distance collar into place.

NOTE:

Be certain the distance collar is in position before installing the bearings.

Drive in the left bearing squarely.

NOTE:

Drive the bearing into position, making sure that it is fully seated and that the sealed side is facing out.

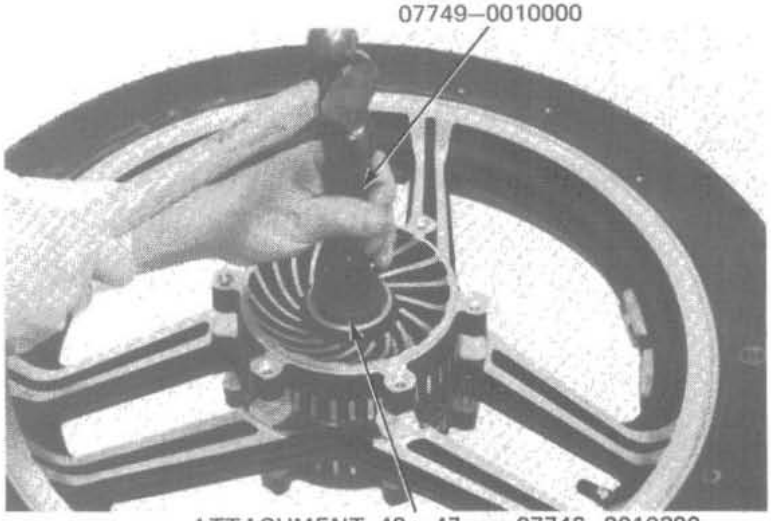

Install the speedometer gear retainer in the wheel hub, aligning the tangs with the slots.

Install the left seal.

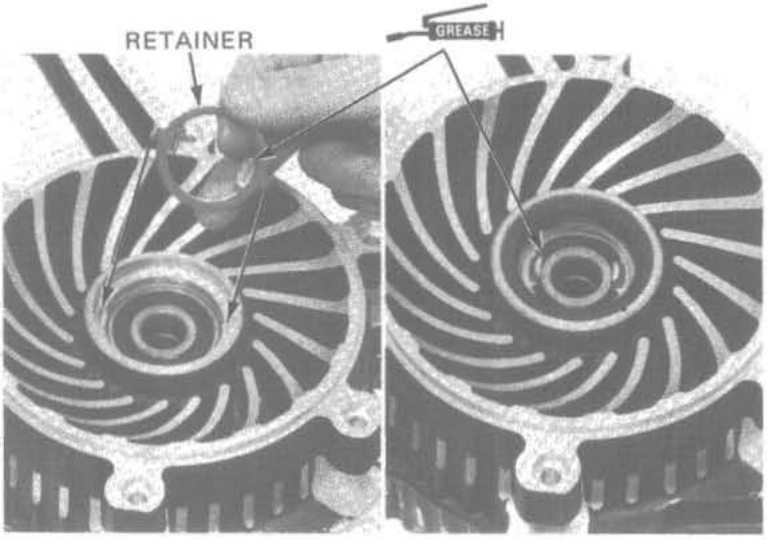

Install the right seal and side collar.

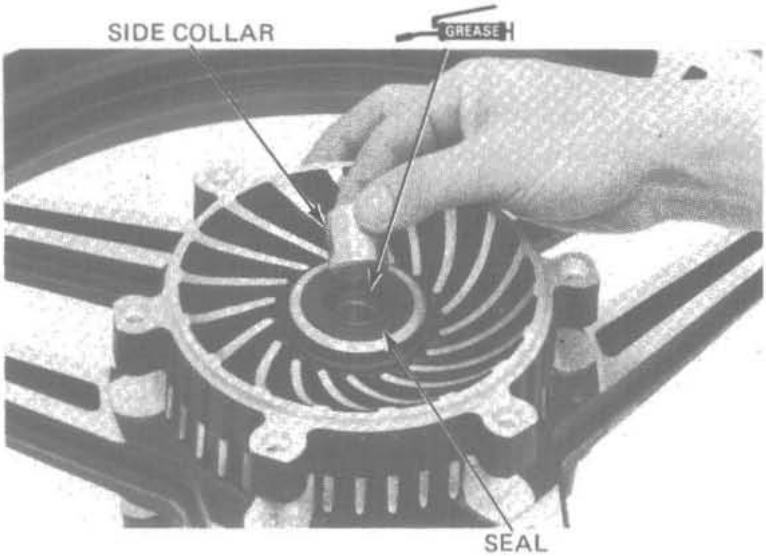

Install the brake disc with the "R" mark on the right and the disc with the "L" mark on the left.

TORQUE: 25–30 N·m (2.5–3.0 kg·m, 18–22 ft·lb)

Install the speedometer gearbox in the wheel hub, aligning the tangs with the slots.

Clean the brake discs with a high quality degreasing agent.

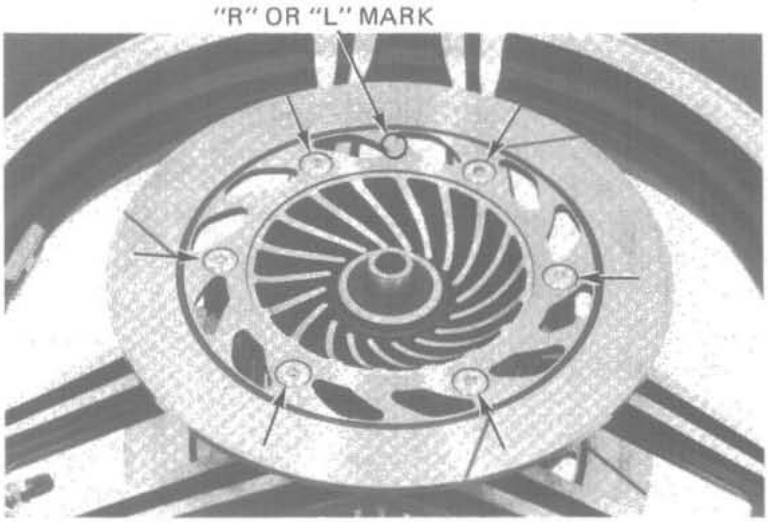

INSTALLATION

Fit the calipers over the discs, taking care not to damage the brake pads. Install the caliper mounting bolts.

TORQUE: 30–40 N·m (3.0–4.0 kg-m, 22–29 ft-lb)

On the V45 SABRE, install the axle holder with the F arrow pointing forward. Loosely tighten the axle holder nuts and install the axle.

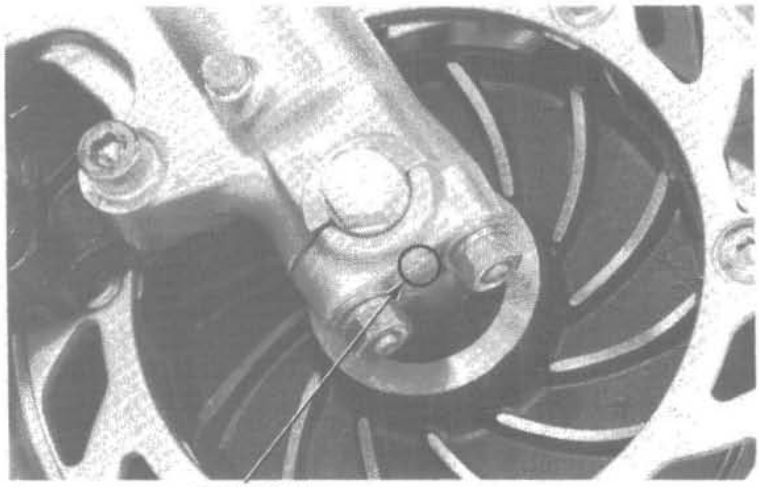

F ARROW

Align the speedometer gearbox with the tang on the left fork leg as shown.
Tighten the axle to the specified torque.

TORQUE: 55–65 N·m (5.5–6.5 kg-m, 40–47 ft-lb)

SPEEDOMETER GEARBOX

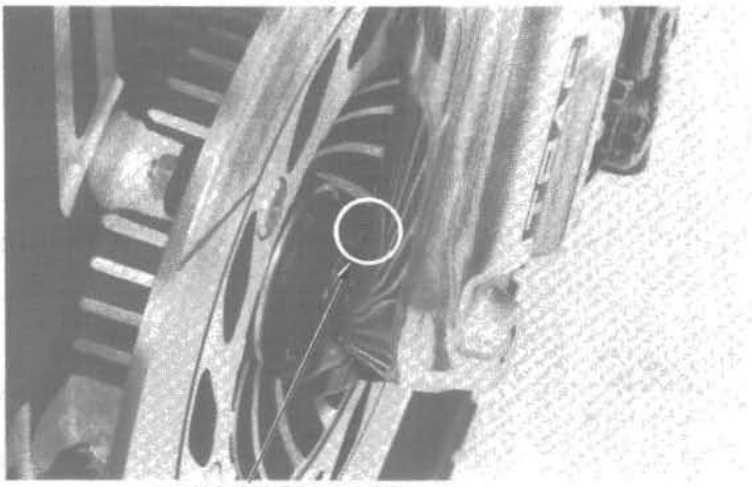

TANG ON FORK LEG

Measure between the outside surface of the right brake disc and the inside of the right caliper holder with a 0.7 mm (0.028 in) feeler gauge.
If the gauge cannot be inserted, pull the right fork out until the gauge can be inserted.
On the V45 SABRE, torque the axle holder nuts, starting with the forward nut.

TORQUE: 18–25 N·m (1.8–2.5 kg-m, 13–18 ft-lb)

On the V45 MAGNA, tighten the axle pinch bolt to the specified torque.

TORQUE: 15–25 N·m (1.5–2.5 kg-m, 11–18 ft-lb)

There should be at least 0.7 mm (0.028 in) clearance between the caliper holder and disc.

CAUTION:

> *After installing the wheel, apply the brakes several times and recheck the clearance on both sides. Failure to provide clearance will damage the brake discs and affect braking efficiency.*

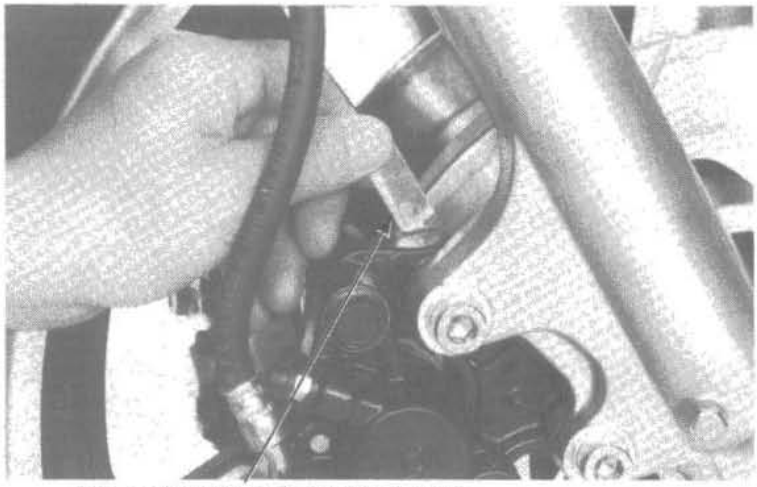

0.7 mm (0.028 in) FEELER GAUGE

Install the speed sensor wire or speedometer cable.

Date of Issue: May, 1982

FRONT FORKS

REMOVAL

Remove the following parts:
- handlebars (V45 SABRE).
- brake calipers.
- front fender.

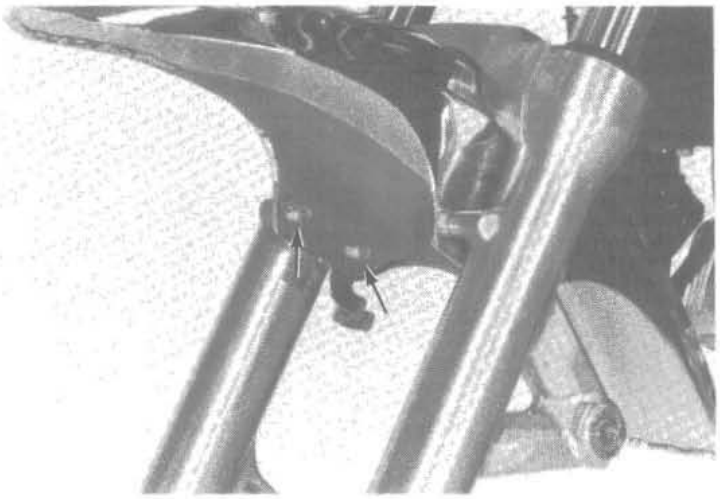

Remove the fork brace.

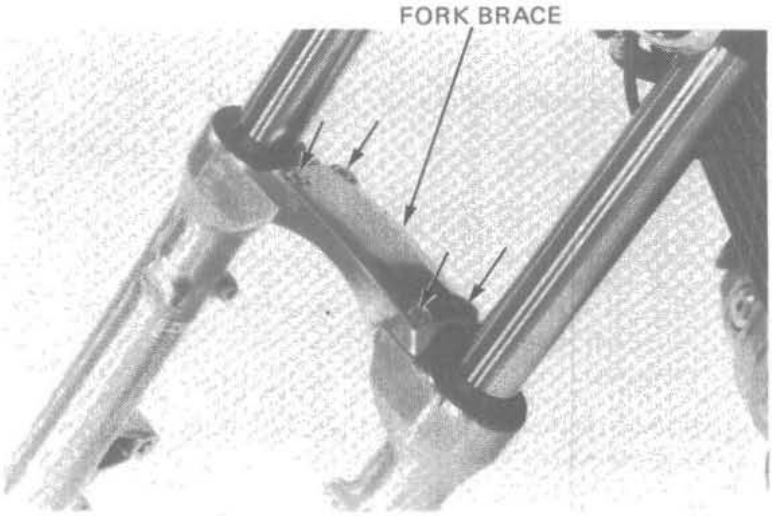

On the V45 SABRE, remove the brake hose two-way joint mounting bolts.

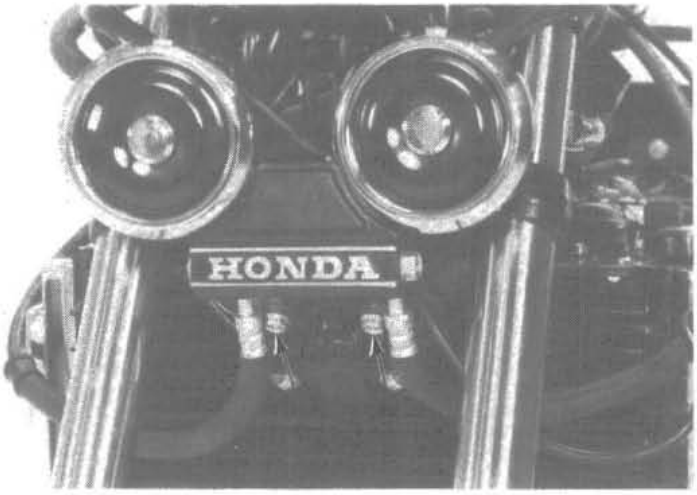

Loosen the fork upper and lower pinch bolts and remove the front fork.

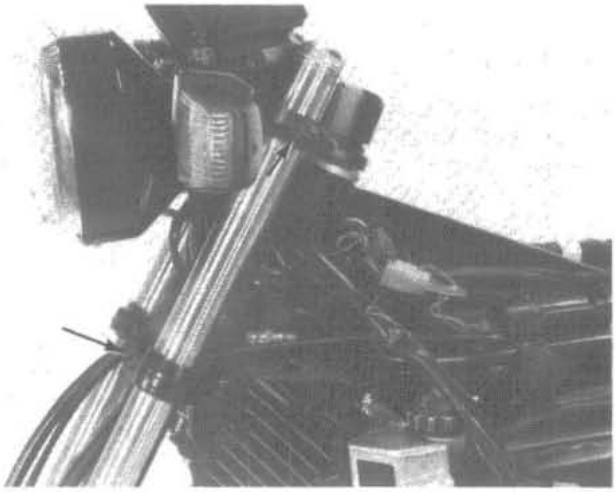

DISASSEMBLY

Depress the air valve and release front fork air pressure.

CAUTION:

- *If air pressure is not released before disassembling, the fork tube cap may become a projectile.*
- *The cap is also under spring pressure. Use care when removing and wear eye and face protection.*

Hold the fork tube in a vise, with soft jaws or a shop towel and remove the fork tube cap.

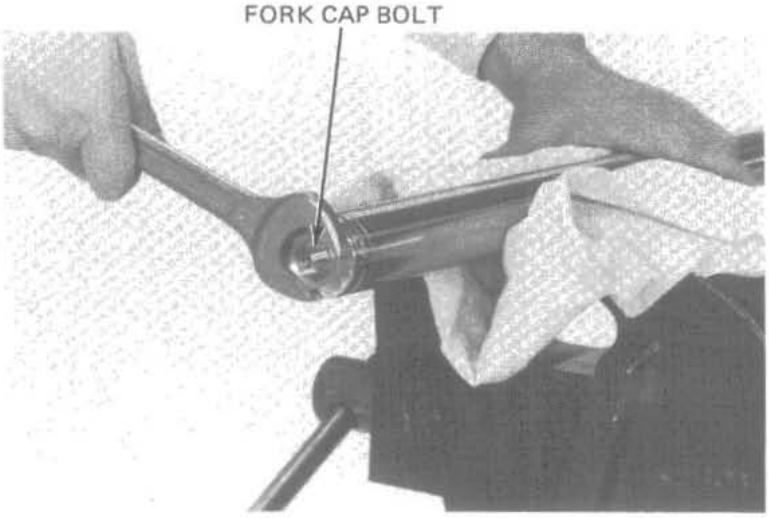

CAUTION:

Do not damage the sliding surface.

Remove the fork spring, spacer and washer.
Pour out fork fluid by pumping the fork up and down several times.

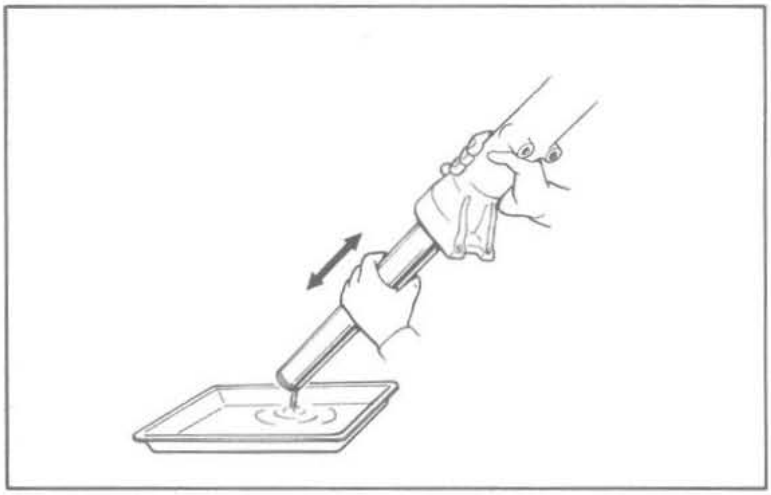

Hold the fork slider in a vise with soft jaws or a shop towel.
Remove the socket bolt with a hex wrench.

NOTE:

> Temporarily install the spring and fork bolt if difficulty is encountered in removing the bolt.

The piston and rebound spring can be removed from the right fork.

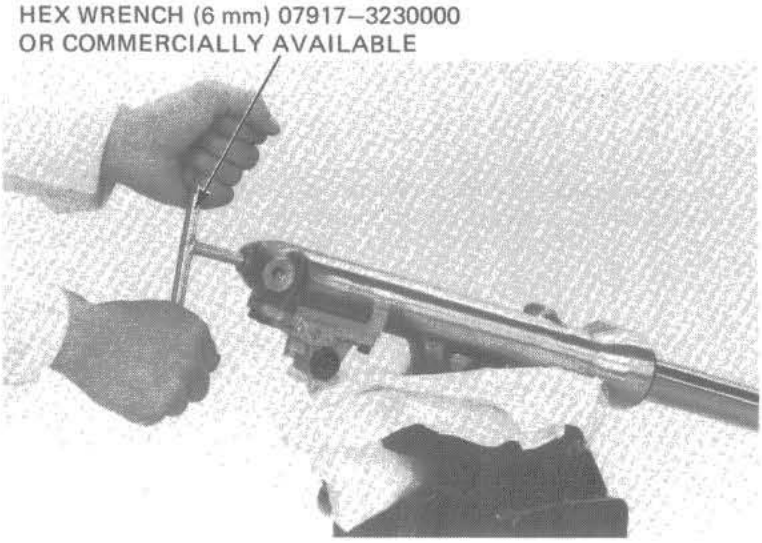

Remove the dust seal and snap ring.

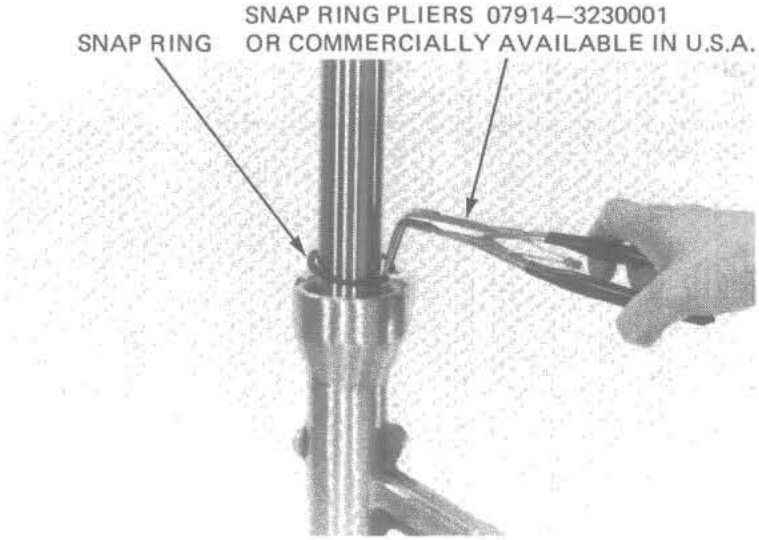

Pull the fork tube out until resistance from the slider bushing is felt. Then move it in and out, tapping the bushing lightly until the fork tube separates from the slider. The slider bushing will be forced out by the fork tube bushing.

Remove the oil lock piece from inside the slider.

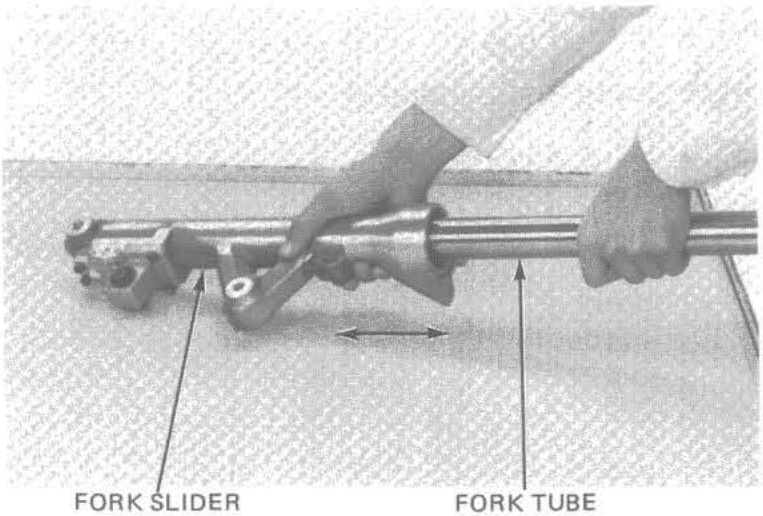

Remove the oil seal, back-up ring and slider bushing from the fork tube.

NOTE:

> Do not remove the fork tube bushing unless it is necessary to replace it with a new one.

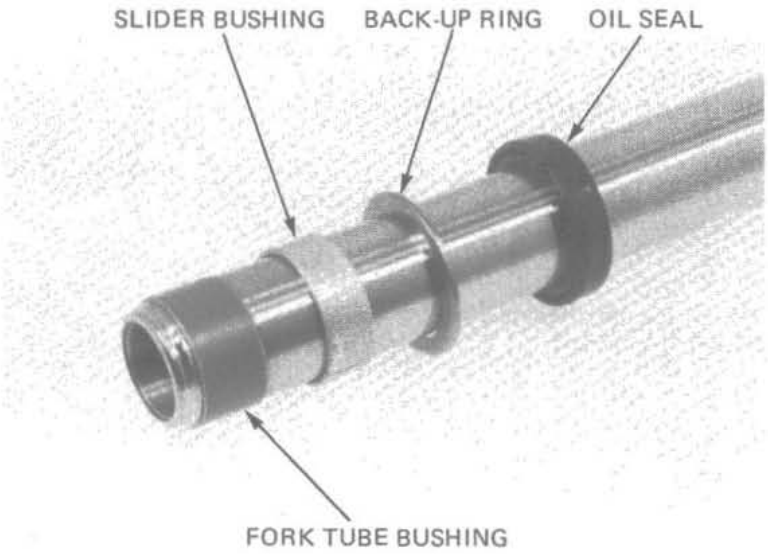

On the left fork, remove the circlip, oil lock valve, spring, and spring seat from the piston.
Remove the piston and rebound spring from the fork tube.

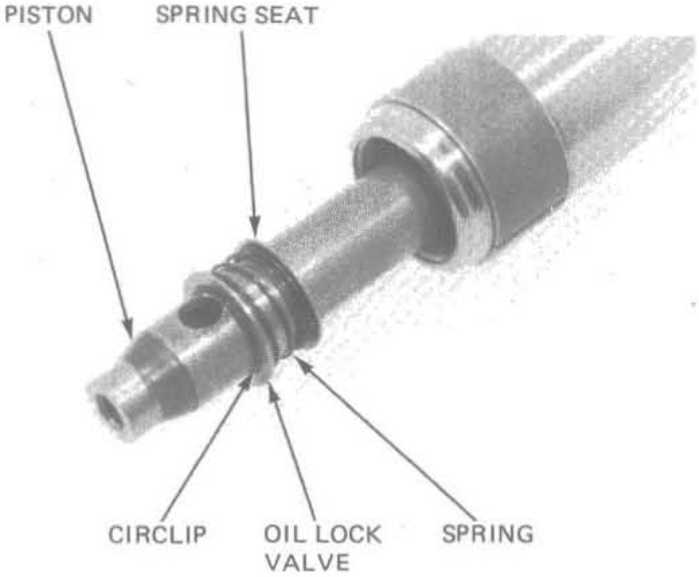

INSPECTION

FORK SPRING FREE LENGTH

Measure the fork spring free length.

SERVICE LIMIT: 521 mm (20.5 in)

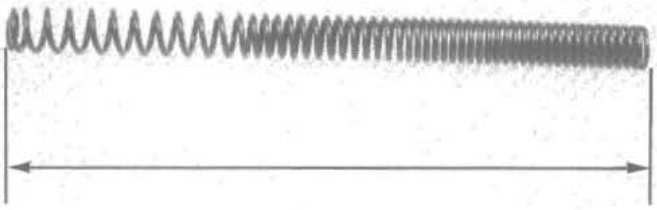

FORK TUBE/FORK SLIDER/PISTON

Check the fork tube, fork slider and piston for score marks, scratches, or excessive or abnormal wear. Replace any components which are worn or damaged.
Check the fork piston ring for wear or damage.
Check the rebound spring for fatigue or damage.

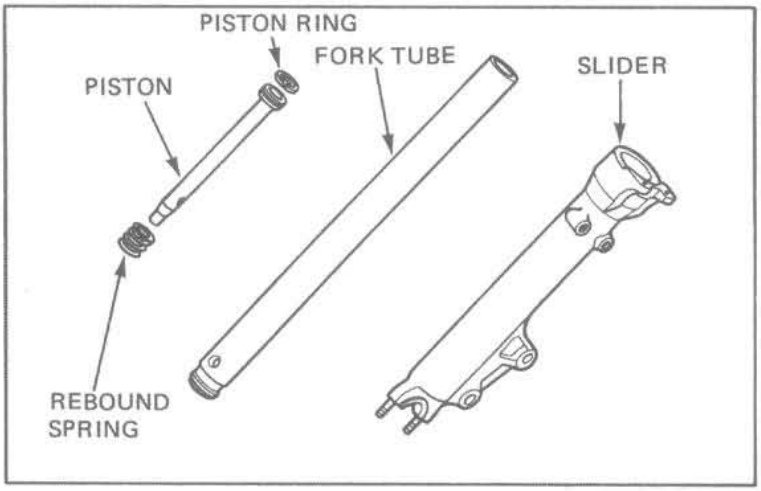

FORK TUBE

Set the fork tube in V blocks and read the runout. Use 1/2 the total indicator reading to determine the actual runout.

SERVICE LIMIT: 0.20 mm (0.008 in)

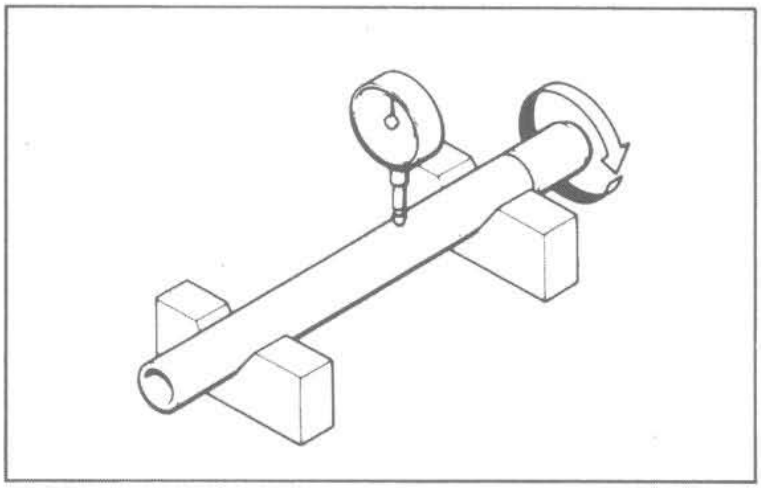

BUSHING/BACK-UP RING

Visually inspect the slider and fork tube bushings. Replace the bushings if there is excessive scoring or scratching, or if the teflon is worn so that the copper surface appears on more than 3/4 of the entire surface.

Check the back-up ring; replace it if there is any distortion at the points shown.

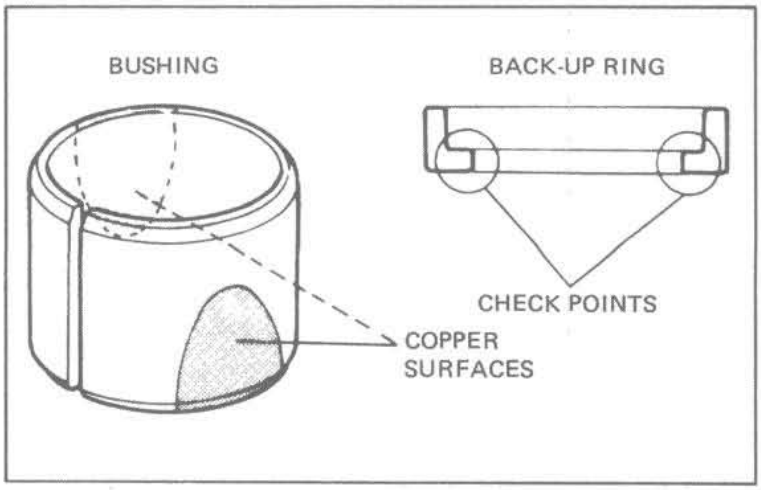

ANTI-DIVE CASE

Remove the four socket bolts and remove the anti-dive case.

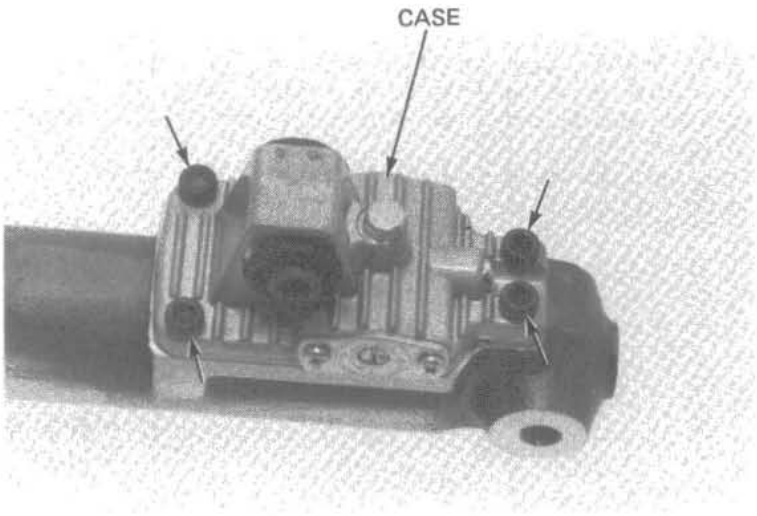

Remove the piston and spring.
Remove the boots, pivot bolt collar and stop rubber.

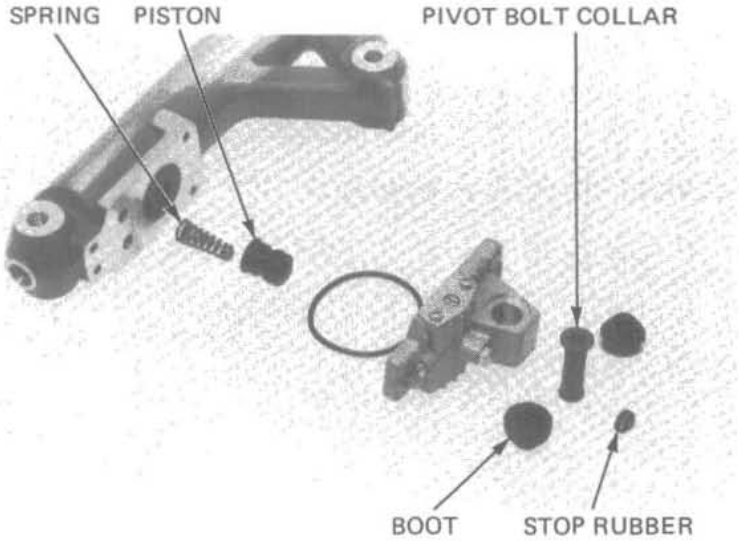

Check the spring and piston for wear or damage.

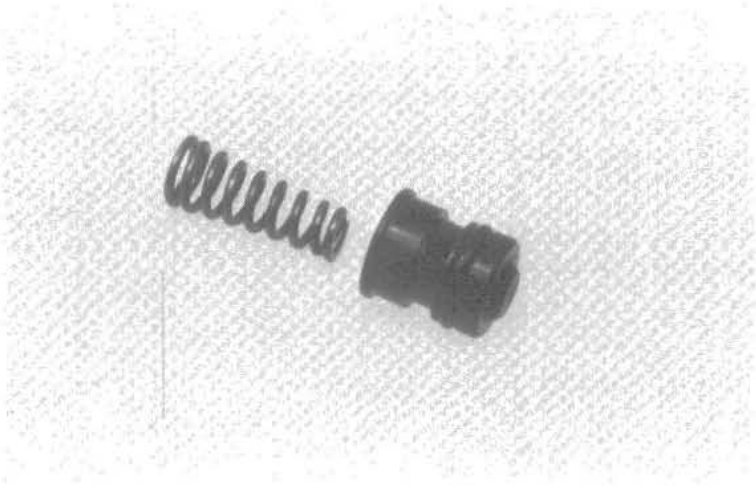

Date of Issue: January, 1982

Remove the orifice setting plate screws, setting plate and orifice.
Check the orifice for clogging by applying compressed air. Also check the orifice for damage and replace if necessary.
Remove the check valve setting screw, valve spring and check ball.

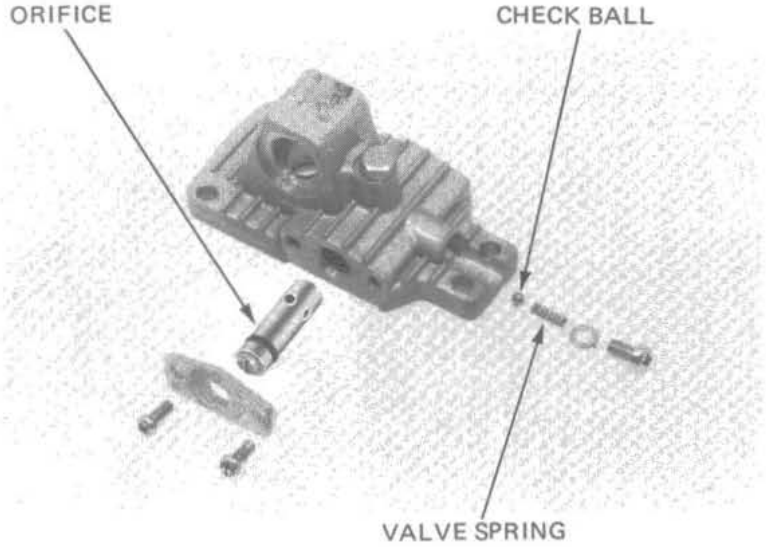

Assemble the anti-dive case in the reverse order of disassembly.

NOTE:

- Apply a Thread Lock Agent to the threads of the screws and socket bolts before assembly.
- Apply ATF to the piston and piston O-ring.
- Apply silicone grease to the pivot bolt collar.
- Install the pivot bolt collar boot holder as shown.

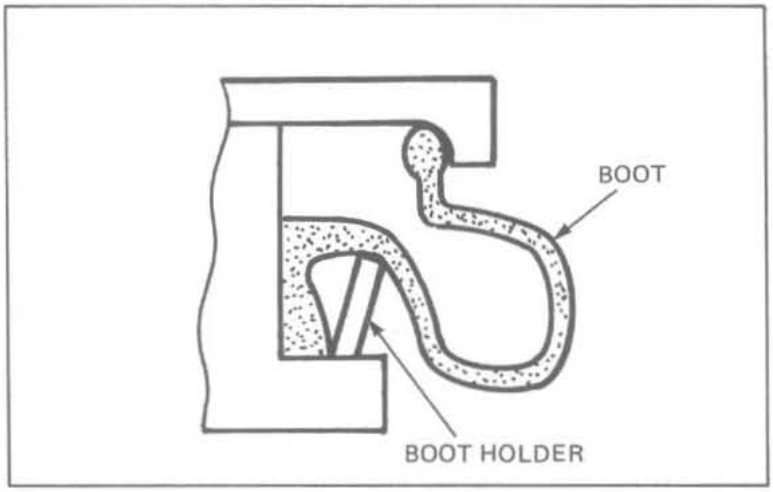

Check the operation of the collar and piston.

STANDARD PISTON STROKE: 2.5 mm (0.10 in)

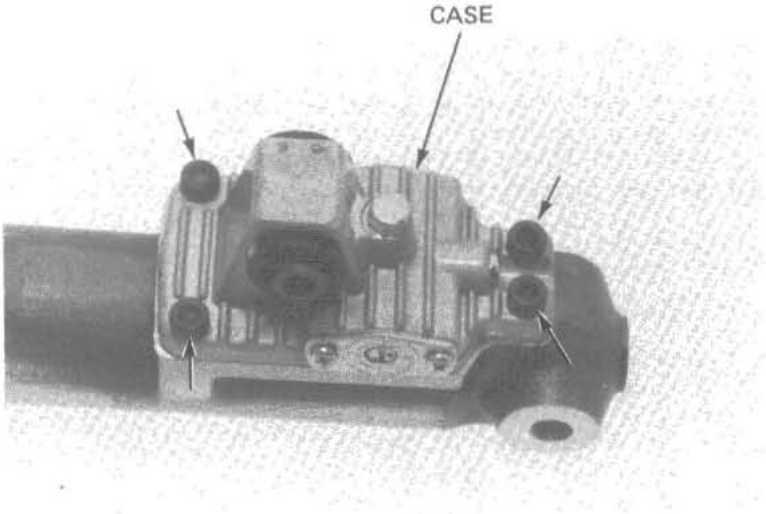

ASSEMBLY

Before assembly, wash all parts with a high flash point or non-flammable solvent and wipe them off completely.

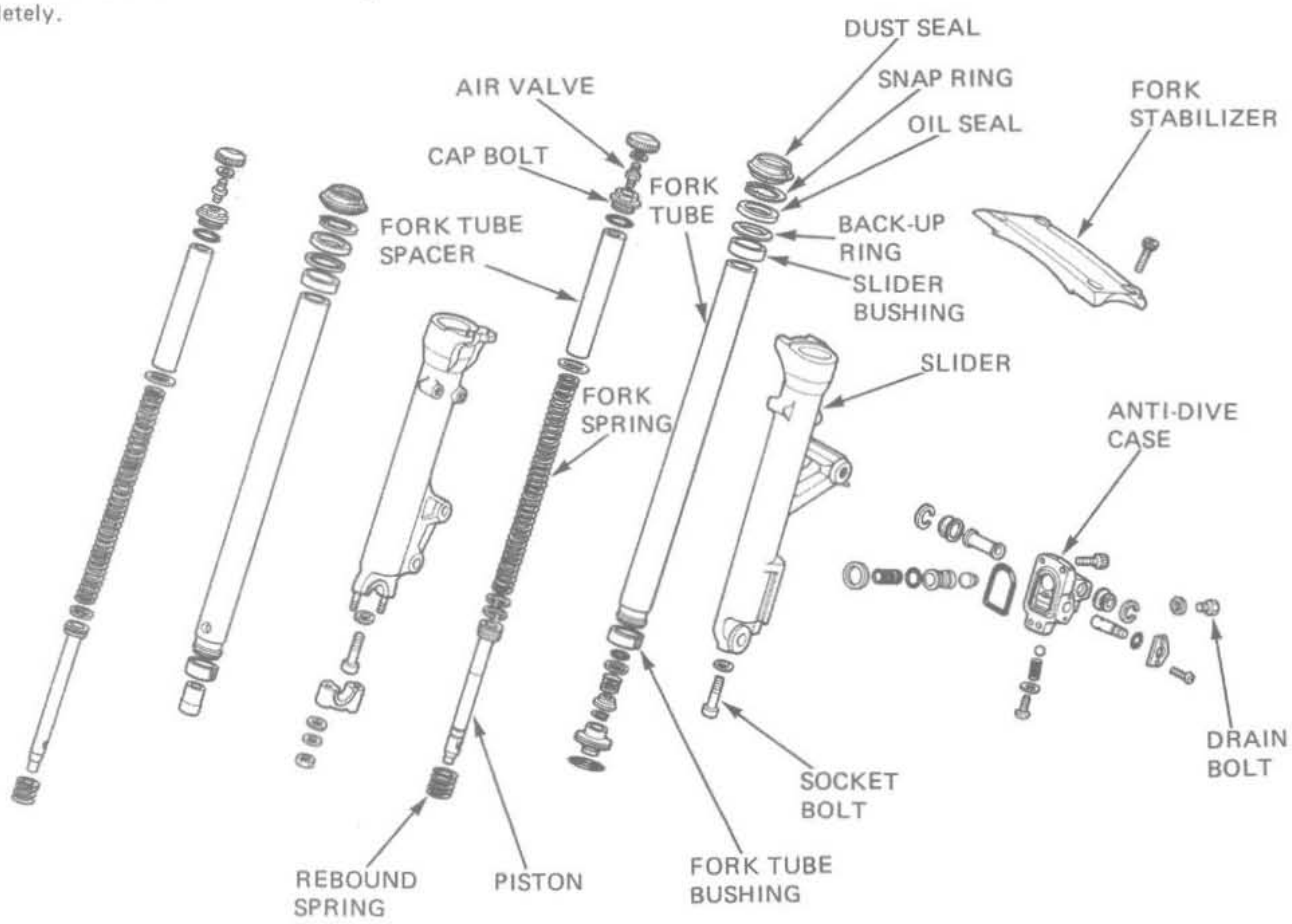

Insert the rebound spring and piston into the fork tube.
On the left fork, install the spring seat, valve spring, oil lock valve and circlip on the piston.
Place the oil lock piece on the end of the piston and insert the fork tube into the slider.

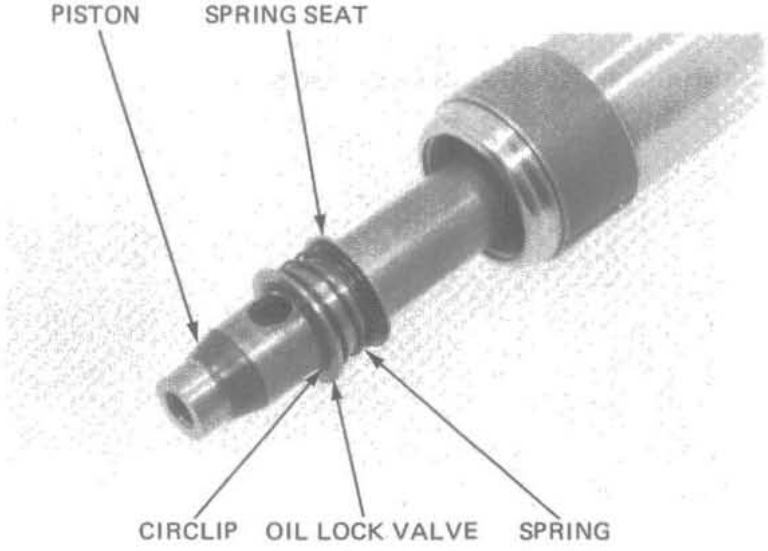

Date of Issue: May, 1982

Place the fork slider in a vise with soft jaws or a shop towel.
Apply a locking agent to the socket bolt and thread it into the piston. Tighten with a 6 mm hex wrench.

NOTE:

> Temporarily install the fork spring and fork cap bolt to tighten the socket bolt.

TORQUE: 15–25 N·m (1.5–2.5 kg·m, 11–18 ft·lb)

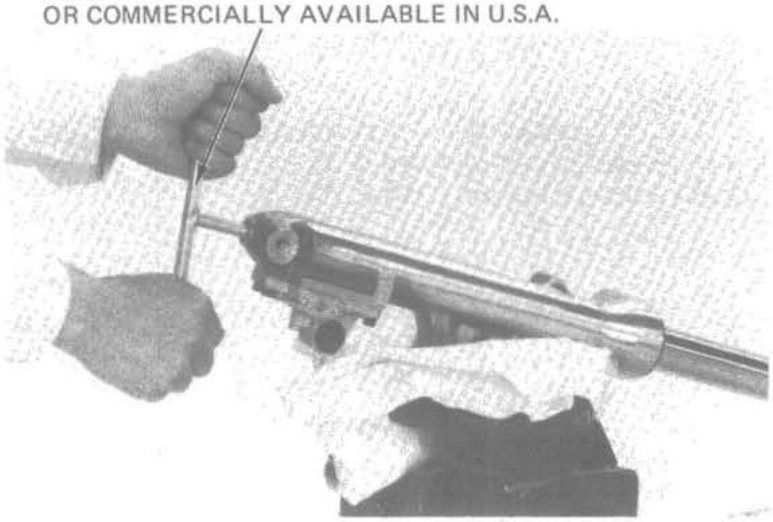

Place the slider bushing over the fork tube and rest it on the slider. Put the back-up ring and an old bushing or equivalent tool on top.
Drive the bushing into place with the seal driver and remove the old bushing or equivalent tool.
Coat a new oil seal with ATF and install it with the seal markings facing up. Drive the seal in with the seal driver.

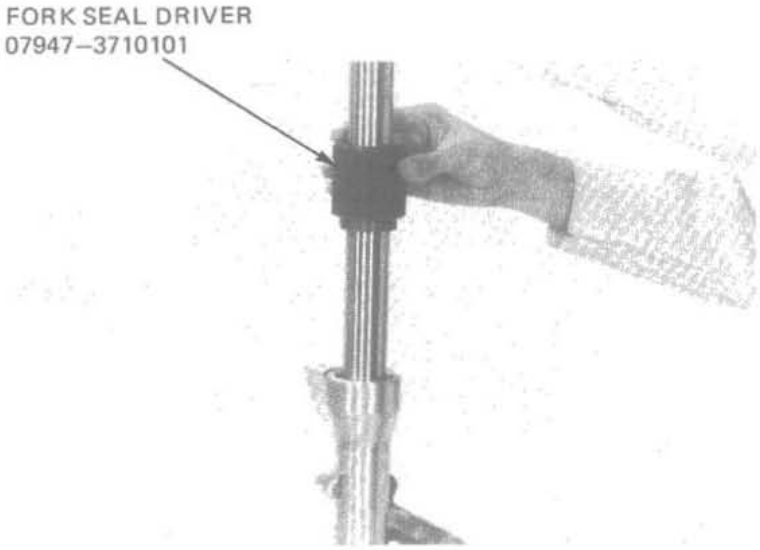

Install the snap ring with its radiused edge facing down and install the dust cover.

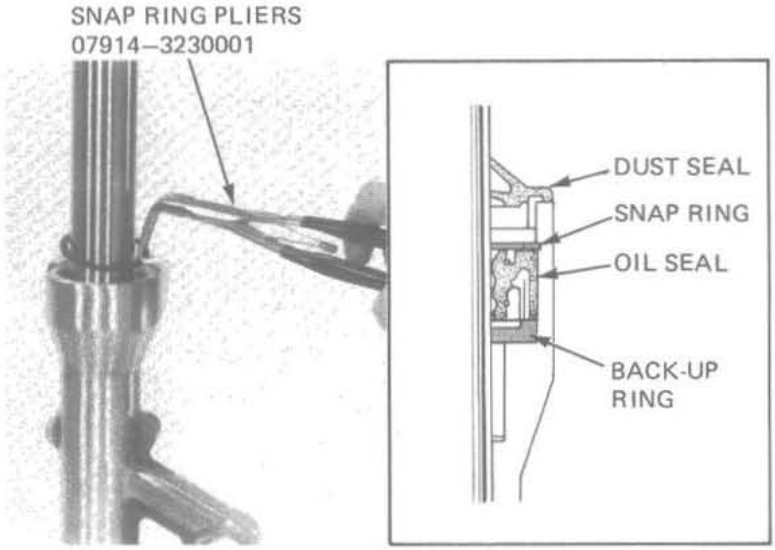

Pour the specified amount of ATF into the fork tube.

CAPACITY:

	V45 SABRE	V45 MAGNA
Right fork:	375 cc (12.7 oz)	390 cc (13.2 oz)
Left fork:	390 cc (13.2 oz)	405 cc (13.7 oz)

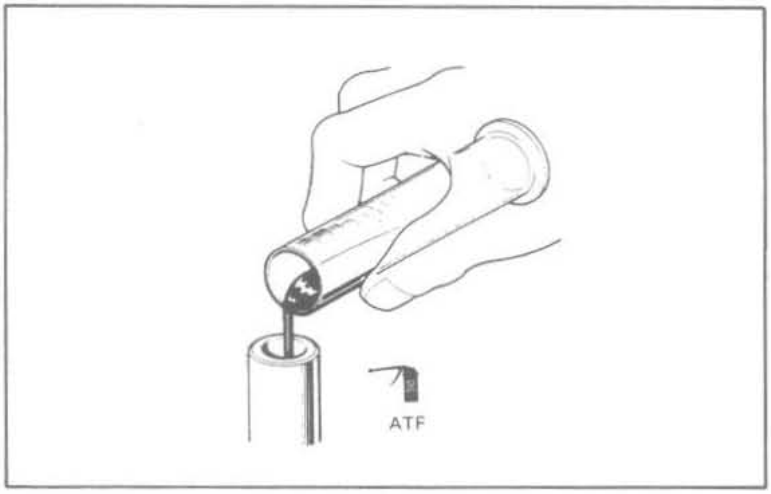

Install the fork spring, spring seat and spacer in the fork tube.

NOTE:

> Note the spring direction, the narrow pitches should face toward the top.

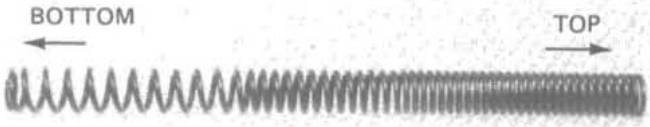

Install and torque the fork tube cap.

TORQUE: 15–30 N·m (1.5–3.0 kg-m, 11–22 ft-lb)

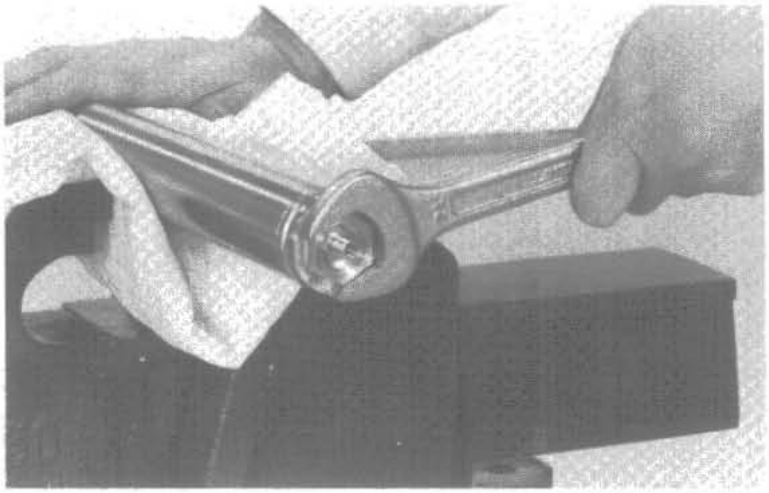

FRONT FORK INSTALLATION

Install the front forks.
On the V45 SABRE, install the handlebars.
Tighten the bottom pinch bolts.

TORQUE: 45–55 N·m (4.5–5.5 kg-m, 33–40 ft-lb)

Tighten the top pinch bolts.

TORQUE: 9–13 N·m (0.9–1.3 kg-m, 7–8 ft-lb)

Install the removed parts in the reverse order of removal.
- V45 SABRE brake two-way joint mounting bolts.
- fork brace.

NOTE:

> Do not install the fork brace before tightening the front fork pinch bolts.

- front fender.
- brake calipers.
- front wheel.

Fill the fork tubes with air to 40–100 kPa (0.4–1.0 kg/cm^2, 6–14 psi).

CAUTION:

> - *Use only a hand operated air pump to fill the fork tubes. Do not use compressed air.*
> - *Maximum pressure is 300 kPa (3 kg/cm^2, 43 psi). Do not exceed this or fork tube component damage may occur.*

With the front brake applied, pump the front forks up and down several times. Place the motorcycle on its center stand. Check the air pressure and adjust if necessary.

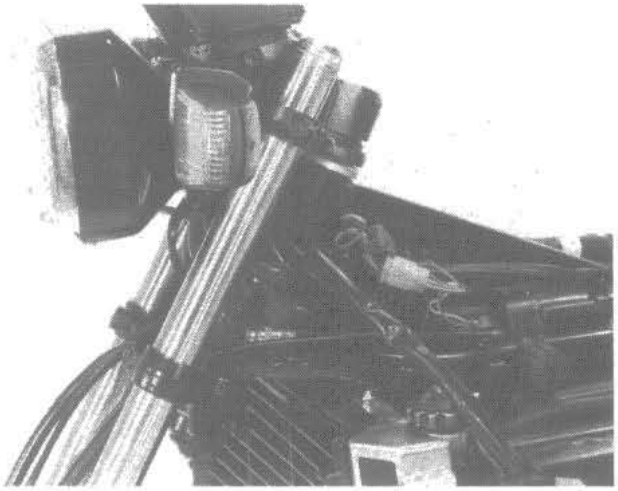

STEERING STEM

REMOVAL

Remove the following components.
- headlight, headlight case and bracket (pages 15-4, 15-5).
- instruments (pages 15-8, 15-12).
- ignition switch (page 15-6).
- handlebar(s) (page 15-15).
- front wheel (page 15-19).
- steering stem nut.
- front fork (page 15-25).
- fork top bridge.

Straighten the lock washer tabs and remove the lock nut and lock washer.

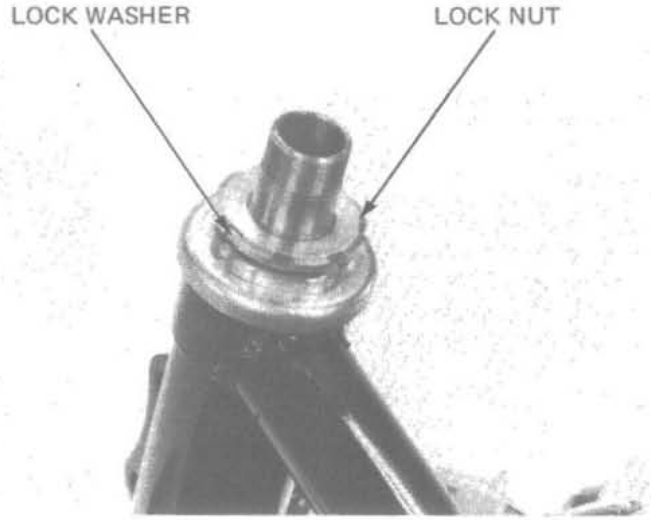

Loosen the bearing adjustment nut and remove the steering stem.

Check the steering stem bearings for damage or wear.

BEARING REPLACEMENT

NOTE:

> Replace the bearing and bearing race as a set.

Remove the bearing from the steering stem.

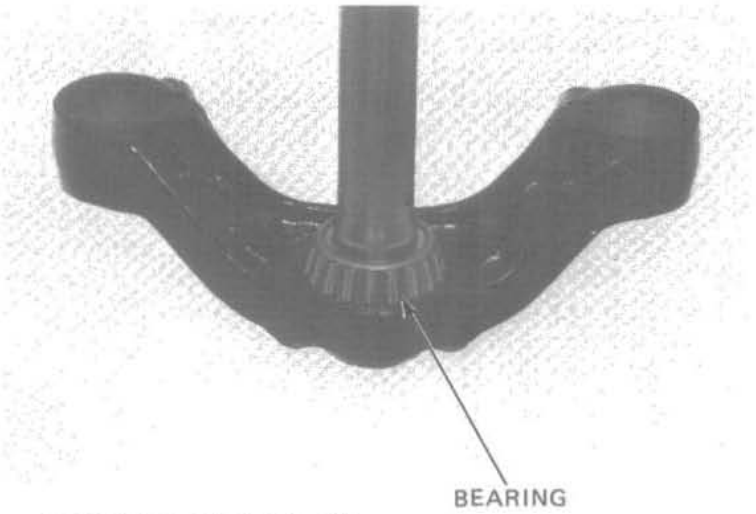

Remove the upper bearing race with the special tool.

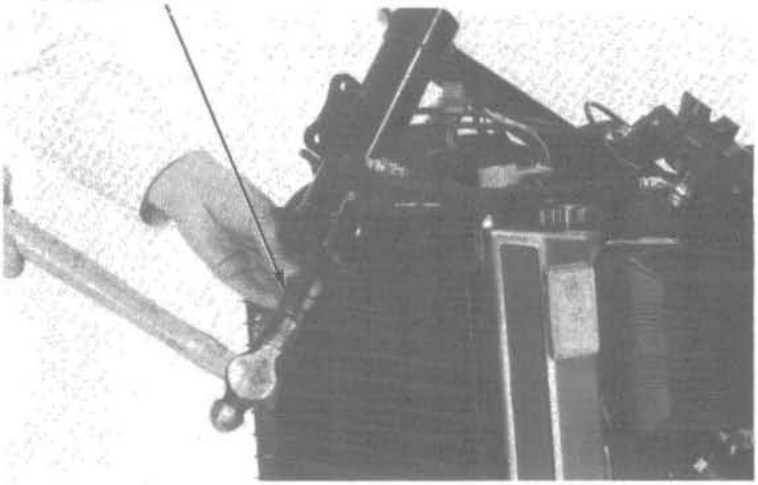

Remove the lower bearing race with the special tool.

NOTE:

> If the motorcycle has been involved in an accident, examine the area around the steering head for cracks.

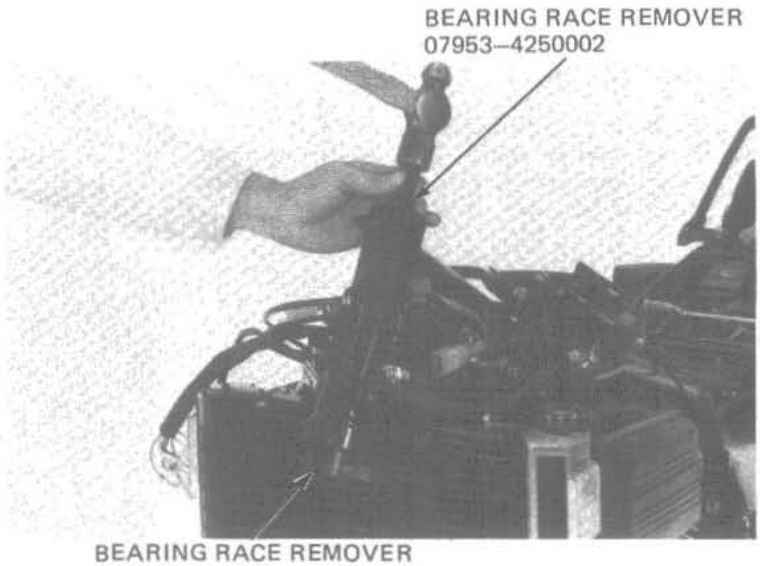

Drive the upper bearing outer race into the head pipe with the special tools.

Drive the lower bearing outer race into the head pipe with the special tool.

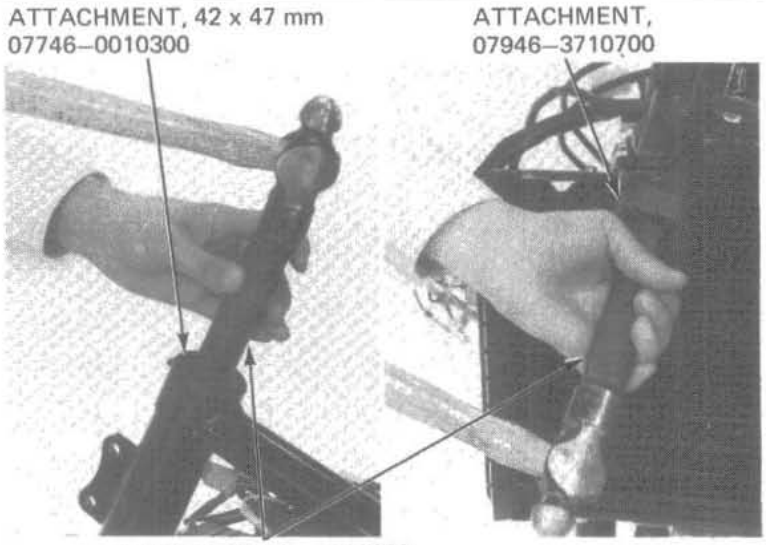

Install a dust seal onto the steering stem and press the lower bearing inner race over the stem with the special tool.

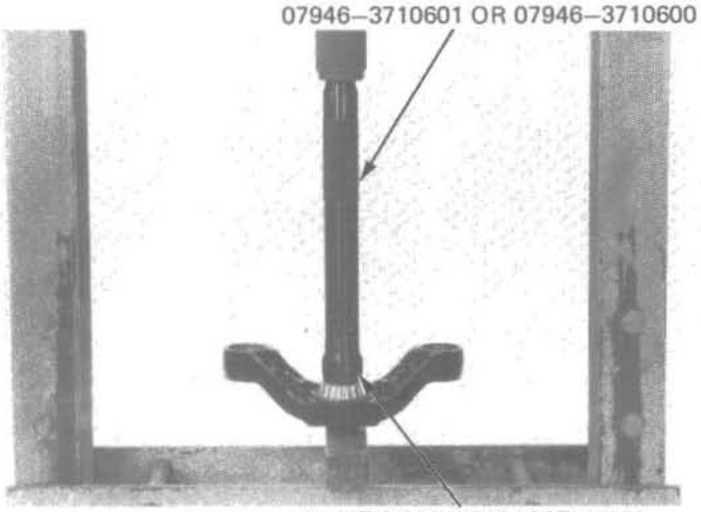

INSTALLATION

Pack the bearing cavities with bearing grease.
Insert the steering stem into the steering head pipe and install the bearing retainer and upper bearing inner race.

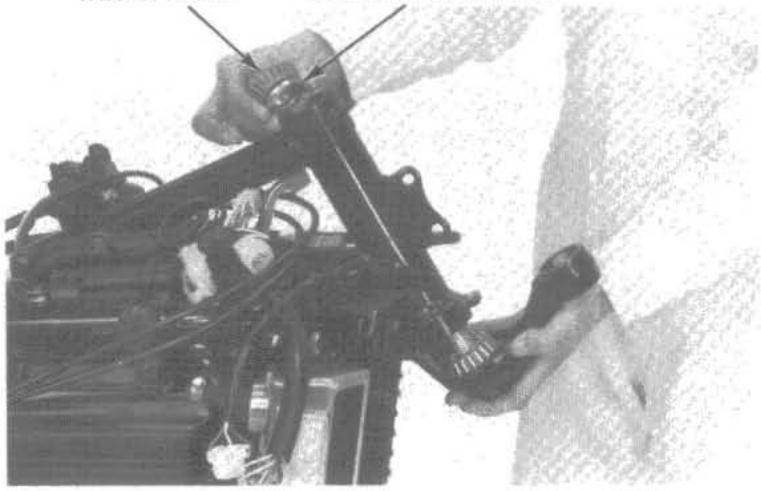

Date of Issue: May, 1982

Install and tighten the adjustment nut.

TORQUE: 14–16 N·m (1.4–1.6 kg·m, 10–12 ft·lb)

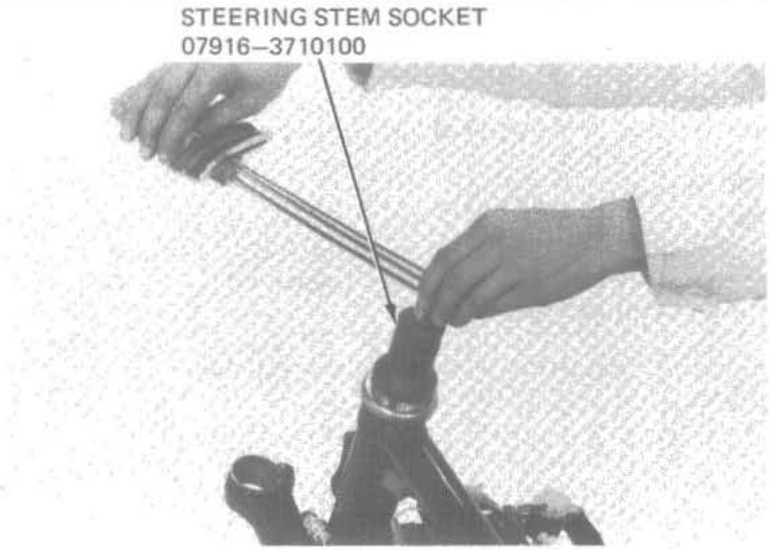

Turn the steering stem lock-to-lock 5 times to seat the bearing and tighten the adjusting nut again.
Repeat the bearing tightening and steering stem turning sequence twice.
If the nut does not tighten after turning the steering stem the first or second time, remove the nut and inspect it and the steering stem threads for dirt or burrs.

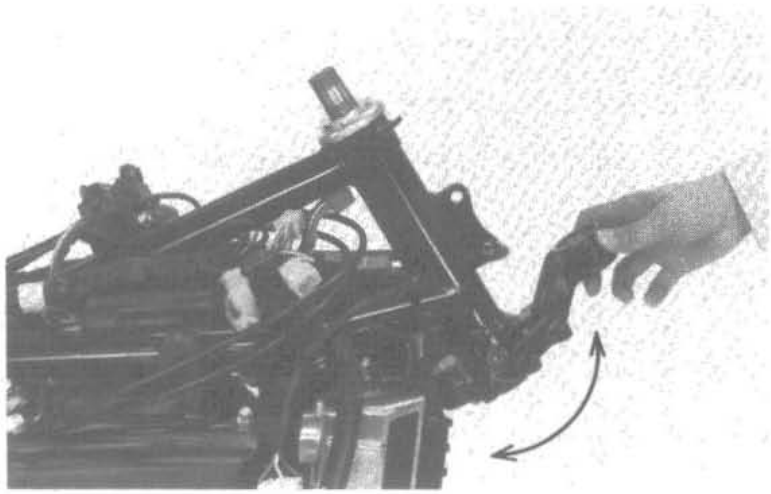

Install a new bearing adjustment nut lock washer aligning the tabs with the grooves in the nut. Bend two oposite tabs down into the grooves.

NOTE:

DO NOT install a used bearing adjustment nut lock washer.

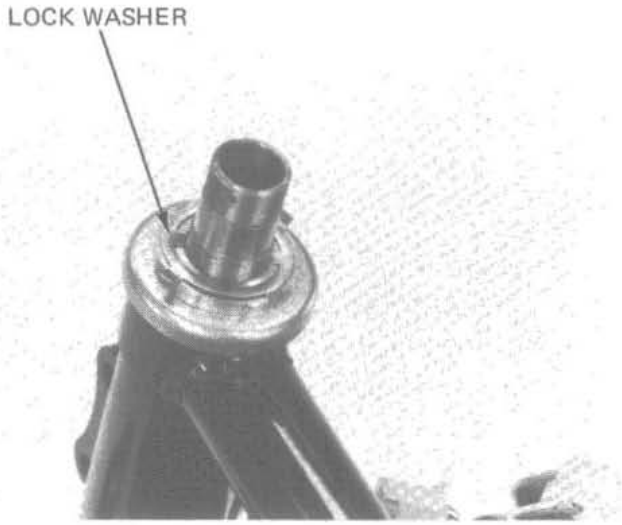

Hand tighten the lock nut.
Hold the adjustment nut and further tighten the lock nut only enough to align its grooves with the lock washer tabs.

NOTE:

> If the lock nut grooves cannot be easily aligned with the lock washer tabs, remove the nut, turn it over and reinstall it.

Bend two lock washer tabs up into the lock nut grooves.

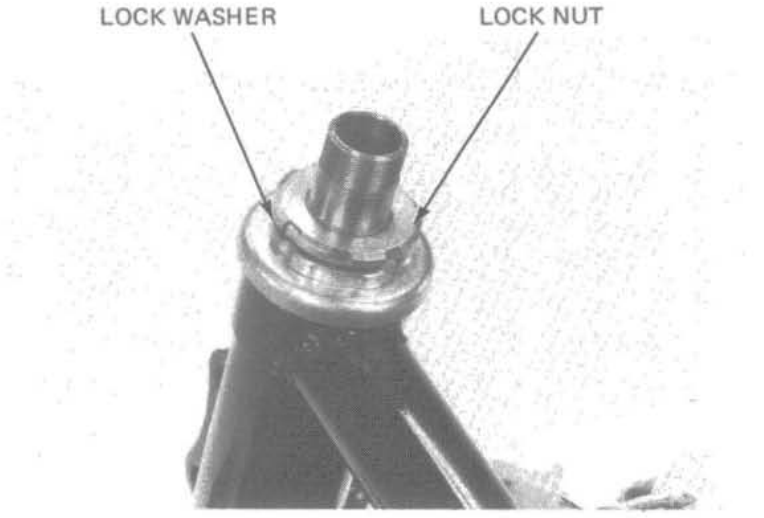

Install the front forks (page 15-35).
Install the fork top bridge and tighten the stem nut.

TORQUE: 80–120 N·m (8.0–12.0 kg-m, 58–87 ft-lb)

Install the removed parts in the reverse order of removal.

Date of Issue: January, 1982

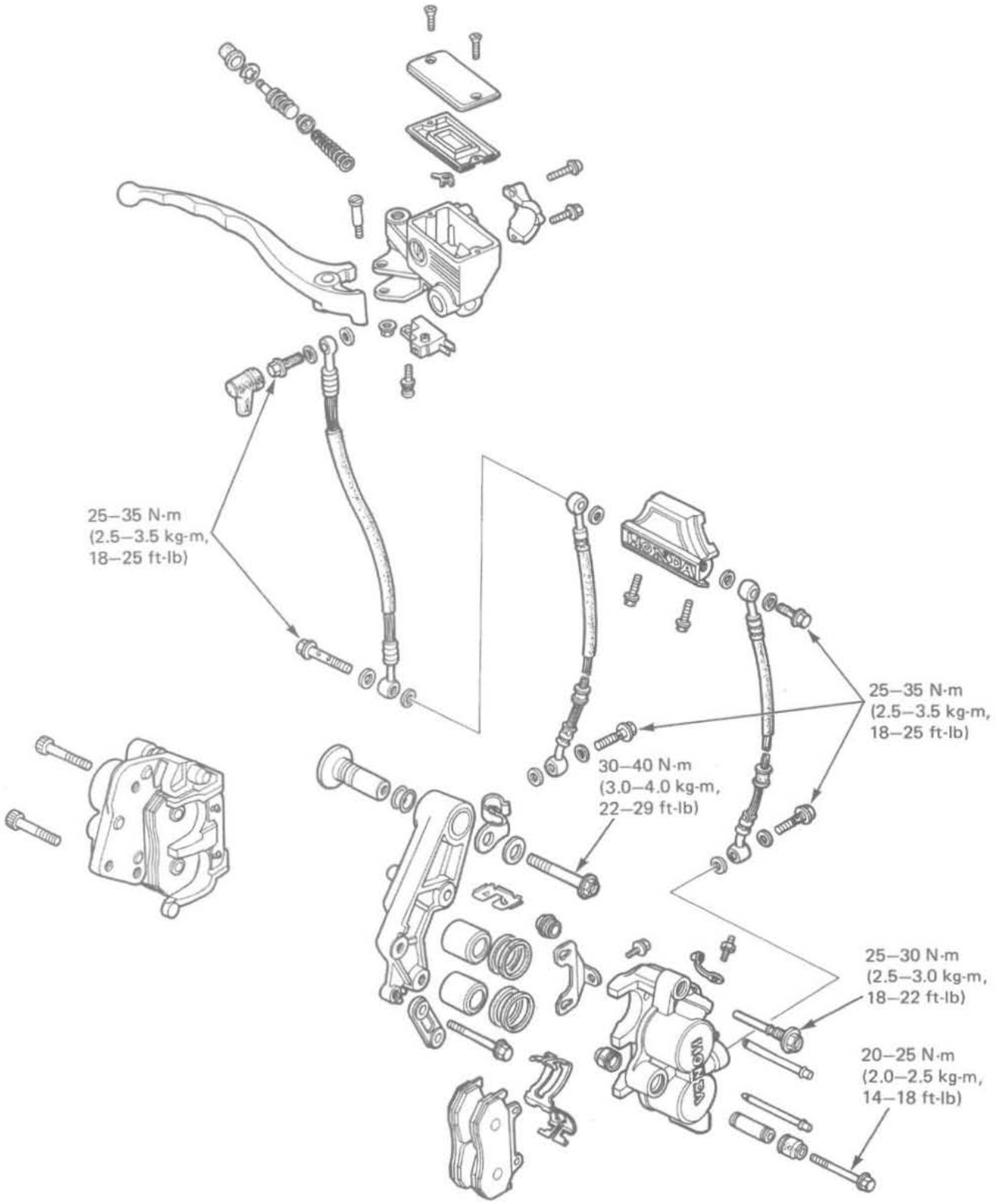

Date of Issue: May, 1982

16. HYDRAULIC BRAKE

SERVICE INFORMATION

GENERAL

- The brake calipers can be removed without disconnecting the hydraulic system.
- Bleed the hydraulic system if it is disassembled or if the brake feels spongy.
- Do not allow foreign material to enter the system when filling the reservoir.
- Avoid spilling brake fluid on painted surfaces or instrument lenses, as severe damage can result.
- Always check brake operation before riding the motorcycle.

SPECIFICATIONS

	STANDARD	SERVICE LIMIT
Front disc thickness	4.8–5.2 mm (0.19–0.20 in)	4.0 mm (0.16 in)
Front disc runout	———	0.3 mm (0.012 in)
Front master cylinder I.D.	15.870–15.913 mm (0.6248–0.6265 in)	15.93 mm (0.627 in)
Front master piston O.D.	15.827–15.854 mm (0.6231–0.6242 in)	15.82 mm (0.623 in)
Front caliper piston O.D.	30.148–30.280 mm (1.1901–1.1921 in)	30.29 mm (1.193 in)
Front caliper cylinder I.D.	30.230–30.280 mm (1.1902–1.2913 in)	30.14 mm (1.187 in)

16

TORQUE VALUES

Brake hose bolt	25–35 N·m (2.5–3.5 kg·m, 18–25 ft-lb)
Front brake caliper bracket	30–40 N·m (3.0–4.0 kg·m, 22–29 ft-lb)
Front brake caliper bolt	20–25 N·m (2.0–2.5 kg·m, 14–18 ft-lb)
Front brake caliper pivot bolt	25–30 N·m (2.5–3.0 kg·m, 18–22 ft-lb)

TOOL

Special

Snap ring pliers	07914–3230001

TROUBLESHOOTING

Brake lever soft or spongy

1. Air bubbles in hydraulic system
2. Low fluid level
3. Hydraulic system leaking

Brake lever too hard

1. Sticking piston(s)
2. Clogged hydraulic system
3. Pads glazed or worn excessively

Brakes drag

1. Hydraulic system sticking
2. Sticking piston(s)
3. Incorrect rear brake pedal adjustment

Brakes grab or pull to one side

1. Pads contaminated
2. One side of front brake faulty
3. Disc or wheel misaligned

Brake chatter or squeal

1. Pads contaminated
2. Excessive disc runout
3. Caliper installed incorrectly
4. Disc or wheel misaligned

Date of Issue: May, 1982

BRAKE FLUID REPLACEMENT/ AIR BLEEDING

Check the fluid level with the fluid reservoir parallel to the ground.

CAUTION:

- *Install the diaphragm on the reservoir when operating the brake lever. Failure to do so will allow brake fluid to squirt out of the reservoir during brake operation.*
- *Avoid spilling fluid on painted surfaces. Place a rag over the fuel tank whenever the system is serviced.*

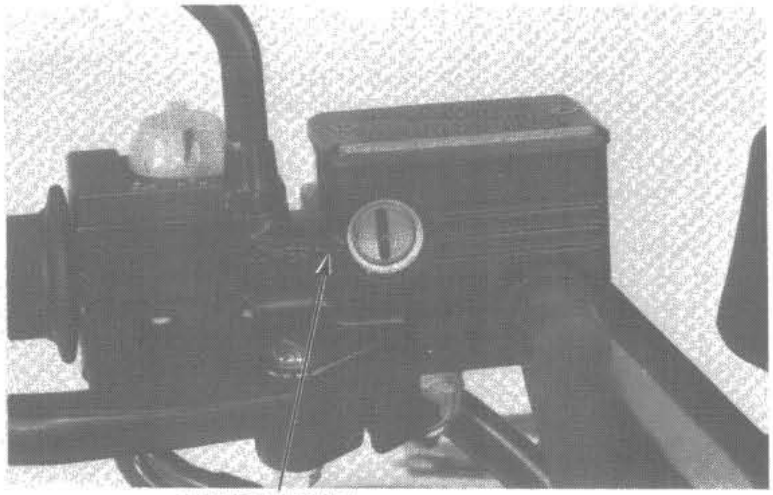

BRAKE FLUID DRAINING

Connect a bleed hose to the bleed valve.
Loosen the caliper bleed valve and pump the brake lever.
Stop operating the lever when fluid stops flowing out of the bleed valve.

WARNING

A contaminated brake disc or pad reduces stopping power. Discard contaminated pads and clean a contaminated disc with a high quality brake degreasing agent.

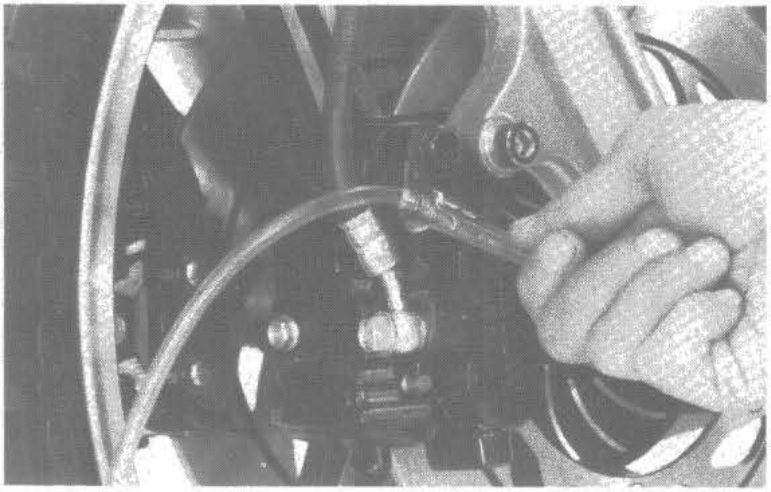

BRAKE FLUID FILLING

NOTE

Do not mix different types of fluid since they are not be compatible.

Close the bleed valve, fill the reservoir, and install the diaphragm.
To prevent piston overtravel and brake fluid seepage, keep a 20 mm (3/4 in) spacer between the handlebar grip and lever when bleeding the front brake system. Pump up the system pressure with the lever until there are no air bubbles in the fluid flowing out of the reservoir small hole and lever resistance is felt.

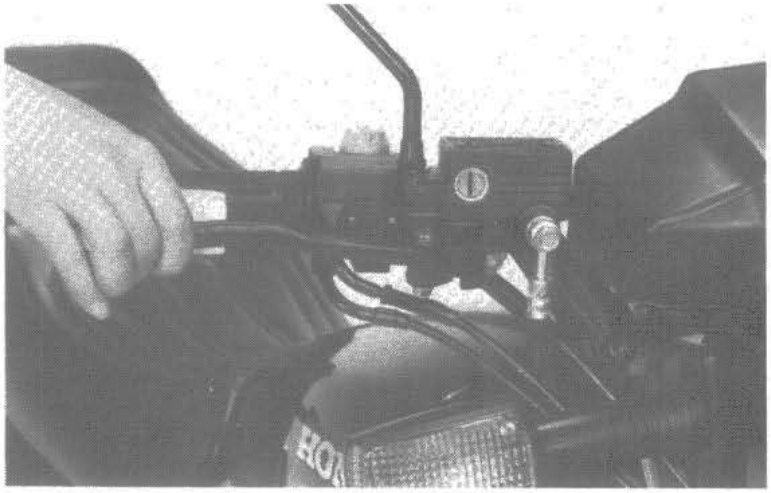

AIR BLEEDING

NOTE

- Check the fluid level often while bleeding the brakes to prevent air from being pumped into the system.
- Use only **DOT 3 brake fluid** from a sealed container.
- Do not mix brake fluid types and never reuse the contaminated fluid which has been pumped out during brake bleeding, because this will impair the efficiency of the brake system.

1) Squeeze the brake lever, open the bleed valve 1/2 turn and then close the valve.

NOTE

Do not release the brake lever until the bleed valve has been closed.

2) Release the brake lever slowly and wait several seconds after it reaches the end of its travel.

Repeat steps 1 and 2 until bubbles cease to appear in the fluid at the end of the hose.

Fill the fluid reservoir to the upper level mark.

WARNING

A contaminated brake disc or pad reduces stopping power. Discard contaminated pads and clean a contaminated disc with a high quality brake degreasing agent.

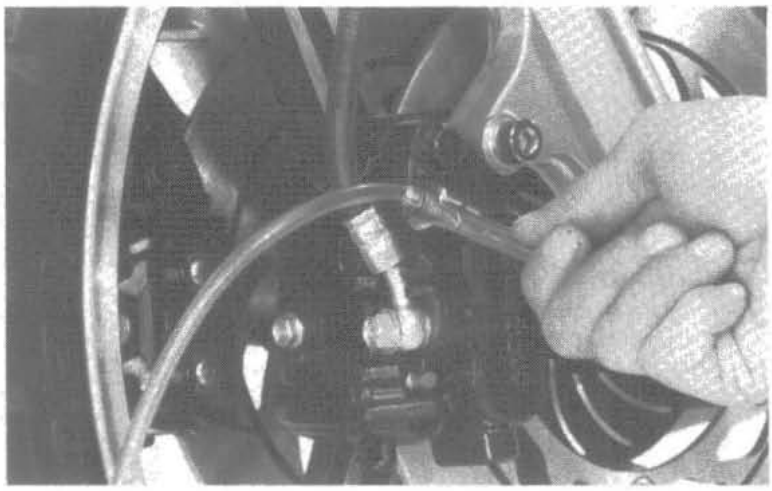

Date of Issue: May, 1982

BRAKE PAD/DISC

PAD REPLACEMENT

NOTE

> Always replace the brake pads in pairs to assure even disc pressure.

Remove the pad pin retainer and caliper bolts.
Pivot the caliper up out of the way.

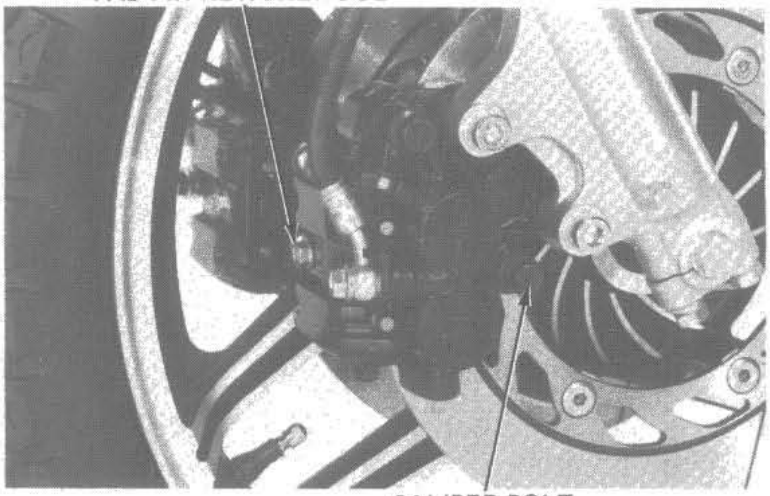

Remove the pad pin retainer and pull the pad pins out of the caliper.
Remove the brake pads.

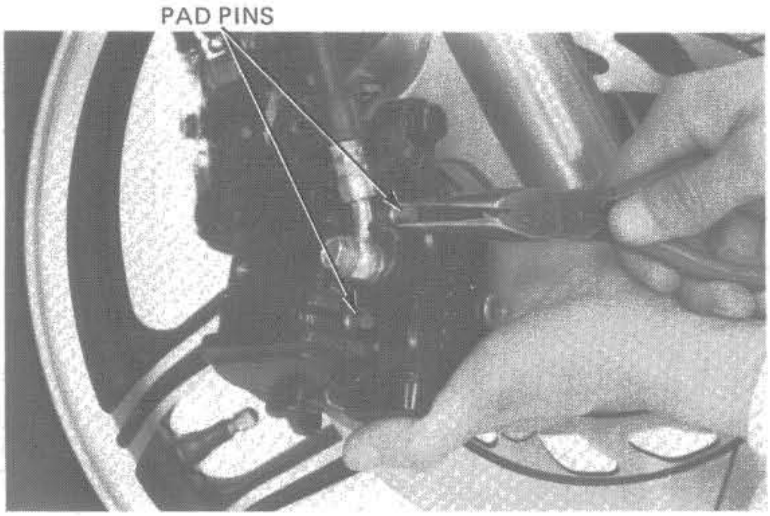

Position the pad spring in the caliper as shown.
Push the caliper pistons in all the way.

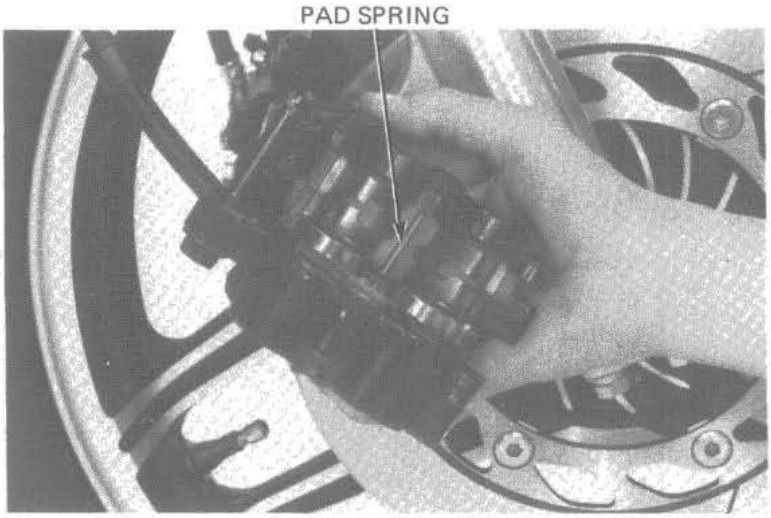

Install the new pads in the caliper.
Install the pad pins; one pad pin first, then install the other pin by pushing the pads against the caliper to depress the pad spring.

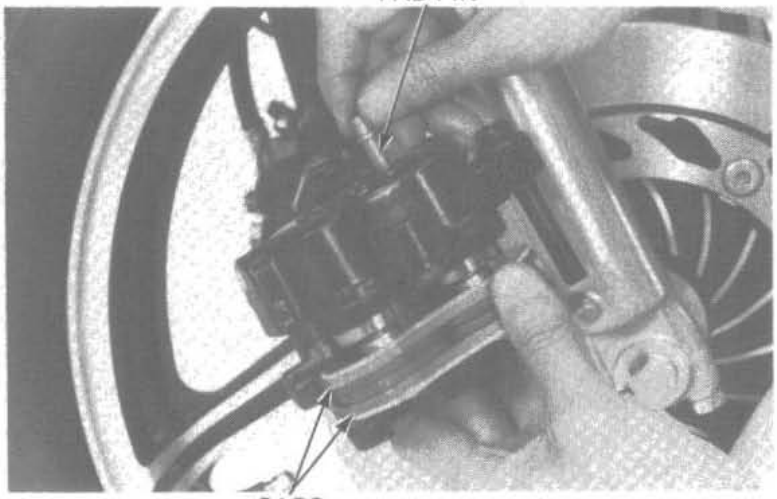

Place the pad pin retainer over the pad pins. Push the retainer down to secure the pins.

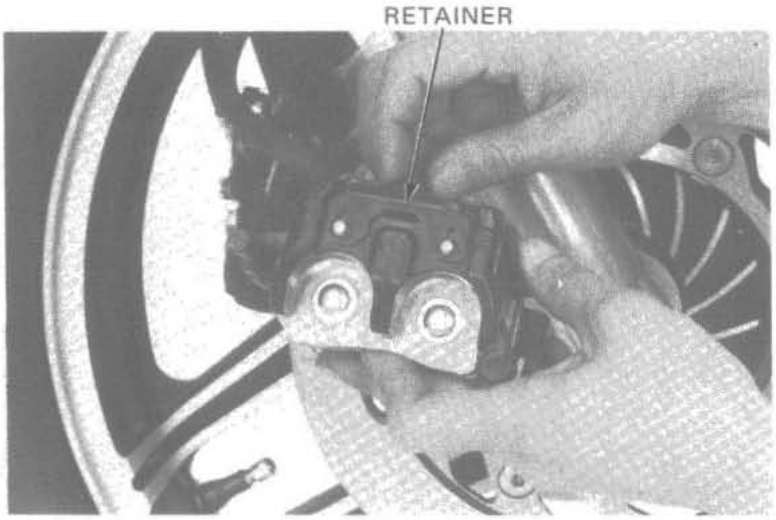

Install the pad pin retainer bolt.
Pivot the caliper down so the brake disc is positioned between the pads, making sure not to damage the pads.
Install the caliper bolt and tighten it.

TORQUE: 20–25 N·m (2.0–2.5 kg-m, 14–18 ft-lb)

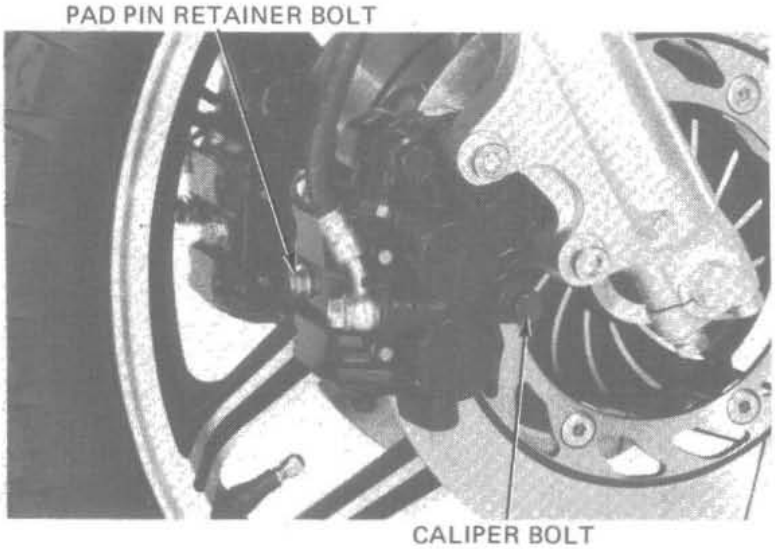

DISC THICKNESS

Measure the thickness of each disc.

SERVICE LIMIT: 4.0 mm (0.16 in)

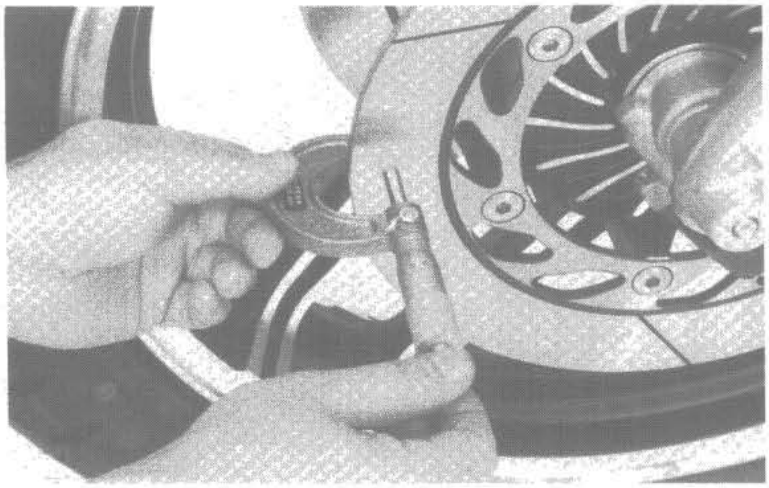

BRAKE DISC WARPAGE

Measure brake disc for warpage on a surface plate.

SERVICE LIMIT: 0.30 mm (0.012 in)

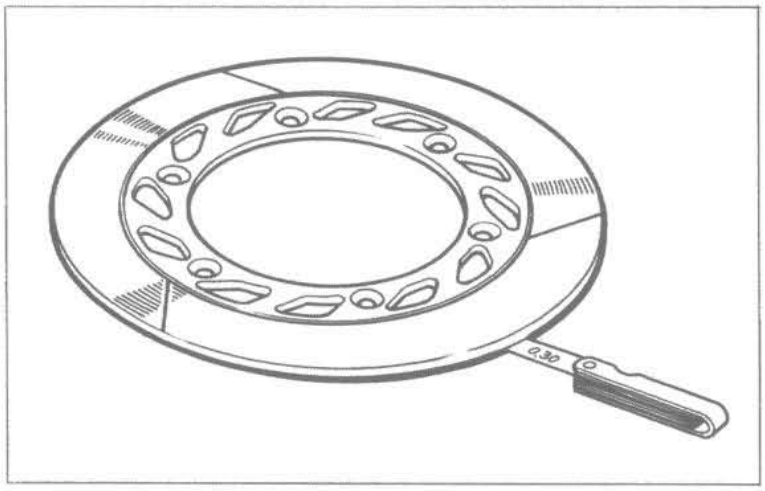

MASTER CYLINDER

DISASSEMBLY

Drain brake fluid from the hydraulic system. Remove the brake lever and rear view mirror from the master cylinder. Disconnect the brake hose.

CAUTION:

> *Avoid spilling brake fluid on painted surfaces. Place a rag over the fuel tank whenever the brake system is serviced.*

NOTE

> When removing the oil hose bolt, cover the end of the hose to prevent contamination. Secure the hose to prevent fluid from leaking out.

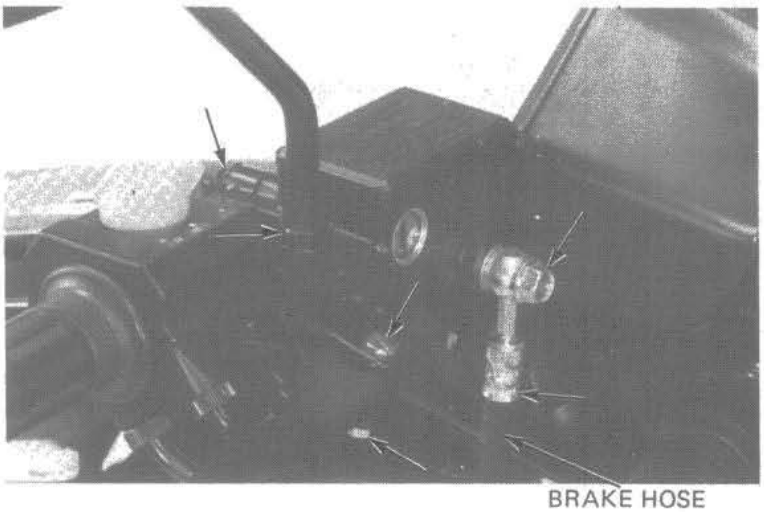

Remove the master cylinder.

Remove the piston boot and the circlip from the master cylinder body.

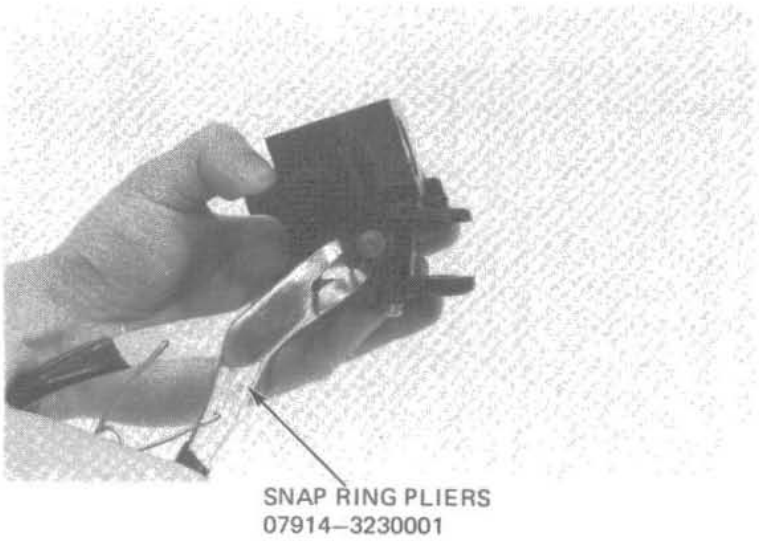

Remove the secondary cup and piston. Then remove the primary cup and spring.

Remove the brake light switch from the master cylinder body, if necessary.

Clean the inside of the master cylinder and reservoir with brake fluid.

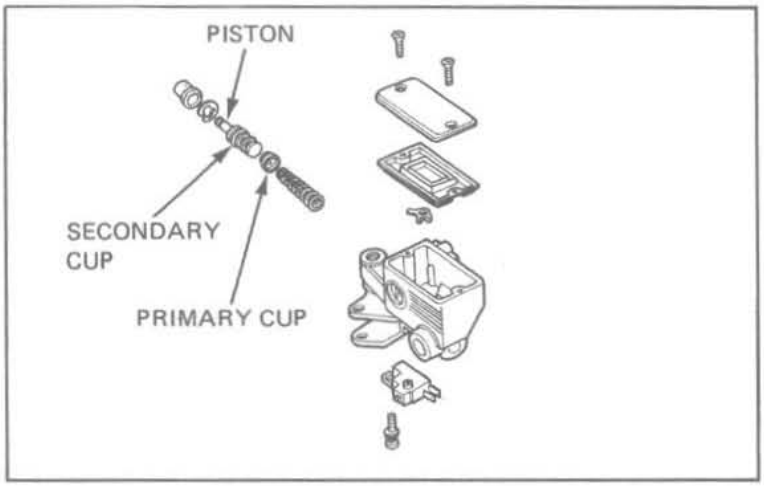

INSPECTION

Measure the master cylinder I.D.
Check the master cylinder for scores, scratches or nicks.

SERVICE LIMIT: 15.93 mm (0.627 in)

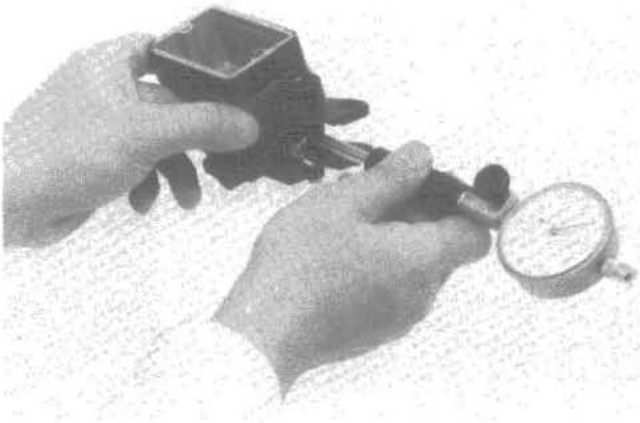

Date of Issue: January, 1982

Measure the master piston O.D.

SERVICE LIMIT: 15.82 mm (0.623 in)

Check the primary and secondary cups for damage before assembly.

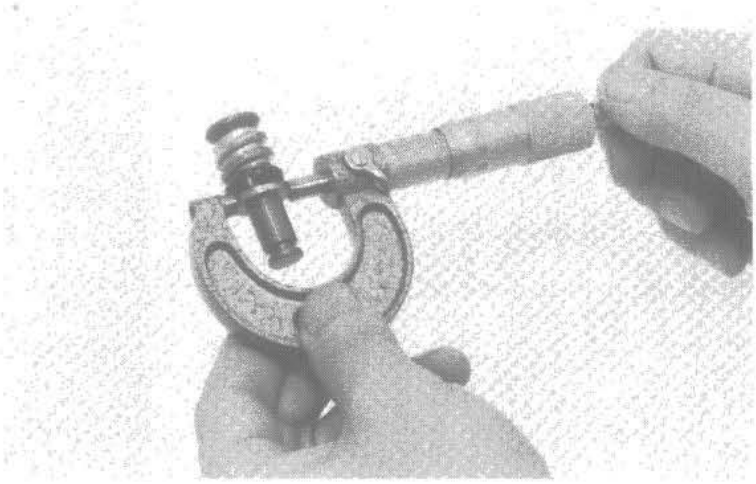

ASSEMBLY

CAUTION:

Handle the master cylinder piston, cylinder and spring as a set.

Assemble the master cylinder. Coat all parts with clean brake fluid before assembly. Install the spring and primary cup together.

Dip the piston cup in brake fluid before assembly.

CAUTION:

When installing the cups, do not allow the lips to turn inside out. Be certain the circlip is seated firmly in the groove.

Install the piston and clip.
Install the boot.

Place the master cylinder on the handlebar and install the holder and the two mounting bolts. Tighten the top bolt first. Install the oil hose with the bolt and its two sealing washers.
Install the brake lever.

Fill the reservoir to the upper level and bleed the brake system according to page 16-4.

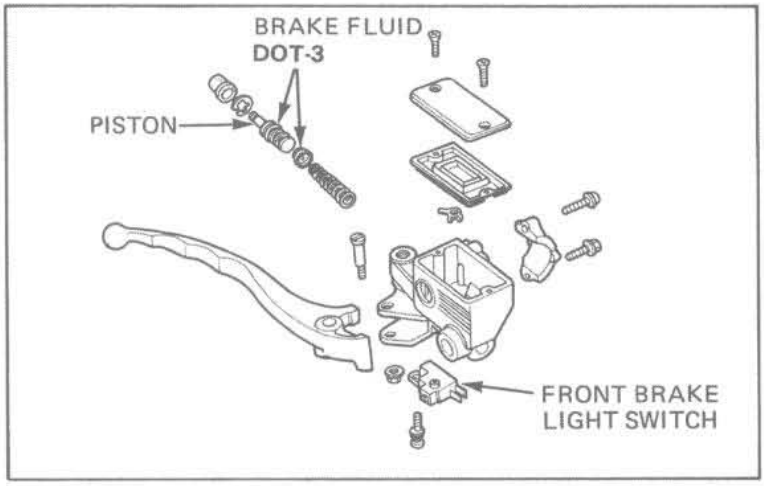

BRAKE CALIPERS

REMOVAL

Place a clean container under the caliper and disconnect the brake hose from the caliper.

CAUTION:

Avoid spilling brake fluid on painted surfaces.

Remove the caliper bolt and caliper.

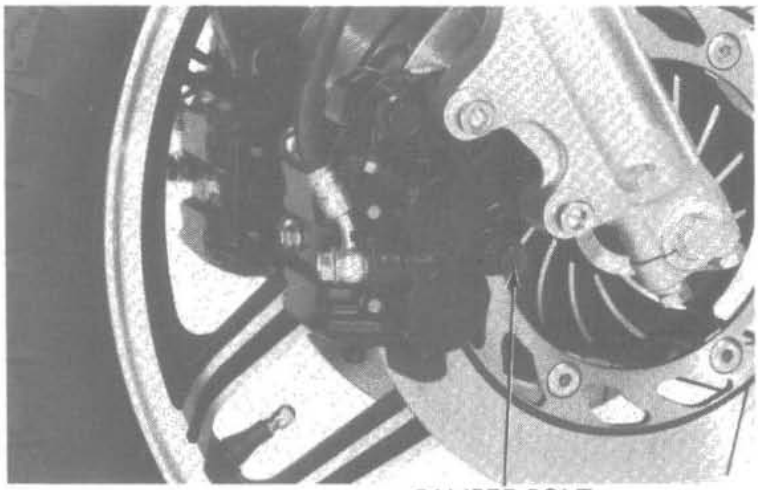

DISASSEMBLY

Remove the pads and pad spring.
Remove the caliper pivot collar and boots.
Remove the pistons from the caliper.

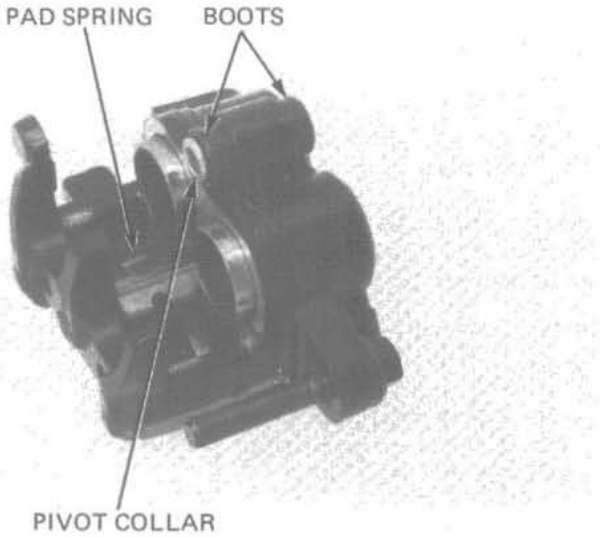

If necessary, apply compressed air to the caliper fluid inlet to get the piston out. Place a shop rag under the caliper to cushion the piston when it is expelled. Use the air in short spurts.

WARNING

Do not bring the nozzle too close to the inlet.

Examine the pistons and cylinders for scoring, scratches or other damage and replace if necessary.

Date of Issue: January, 1982

Push the piston seals in and lift them out and discard them.
Clean the oil seal grooves with brake fluid.

CAUTION:

Be careful not to damage the piston sliding surfaces.

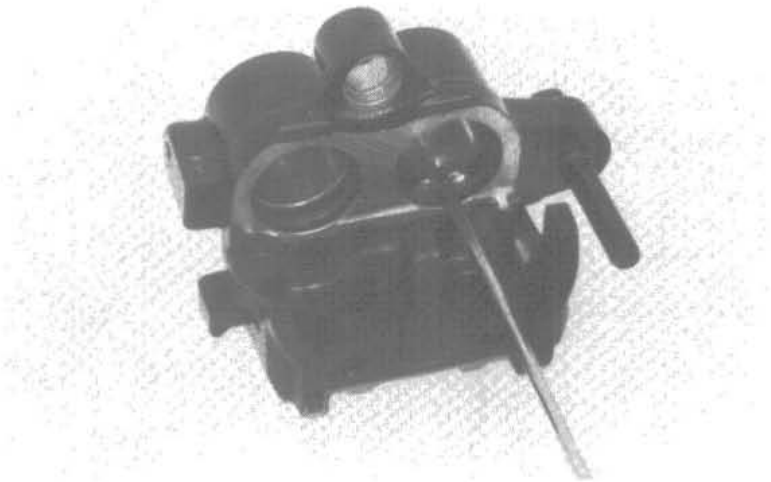

PISTON INSPECTION

Check the pistons for scoring, scratches or other faults. Measure the piston diameter with a micrometer.

SERVICE LIMIT: 30.14 mm (1.187 in)

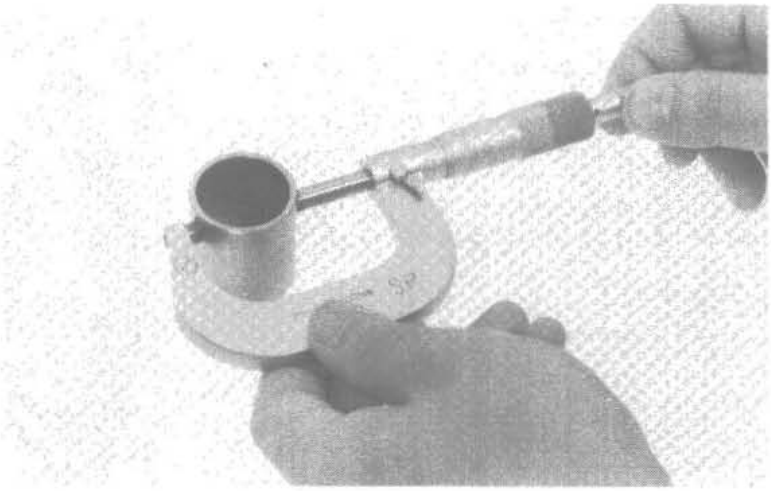

CYLINDER INSPECTION

Check the caliper cylinder for scoring, scratches or other faults. Measure the caliper cylinder bore.

SERVICE LIMIT: 30.29 mm (1.193 in)

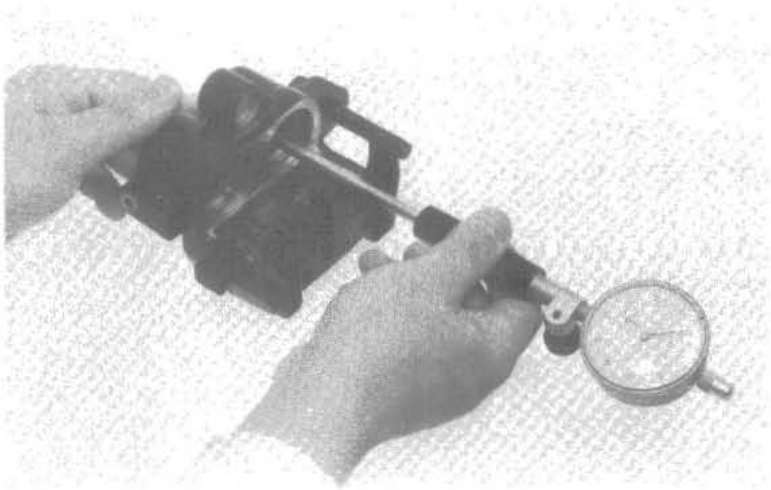

ASSEMBLY

If the piston boots are hardened or deteriorated, replace them with new ones.
The piston seals must be replaced with new ones whenever they are removed. Coat the seals with silicone grease or brake fluid before assembly.
Install the pistons with the dished ends toward the pads. Then install the piston boots.
Install the collar boots and collar making sure that the boots are seated in the collar and caliper grooves properly.
Install the pad spring and pads.

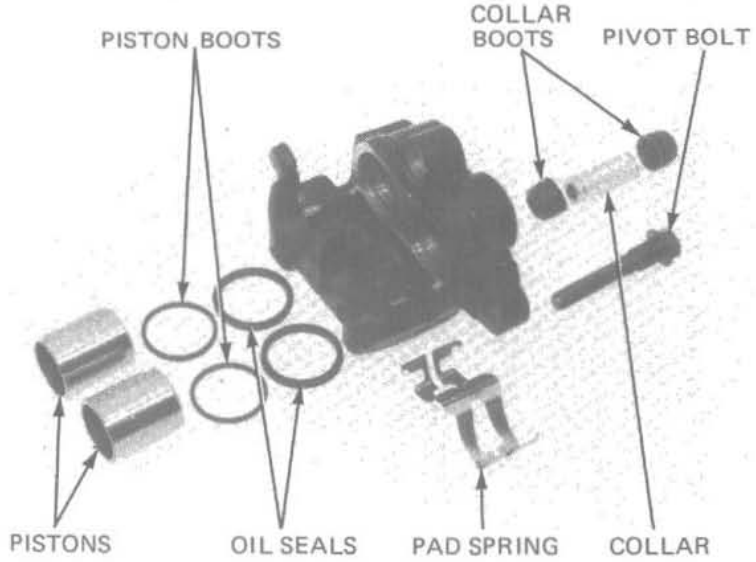

INSTALLATION

Install the pad spring on the caliper bracket as shown.
Inspect the condition of the caliper pivot bolt boot.
Apply silicone grease or brake fluid to the caliper pivot bolt.
Install the caliper assembly over the brake disc so that the disc is positioned between the pads.

CAUTION:

Be careful not to damage the pads.

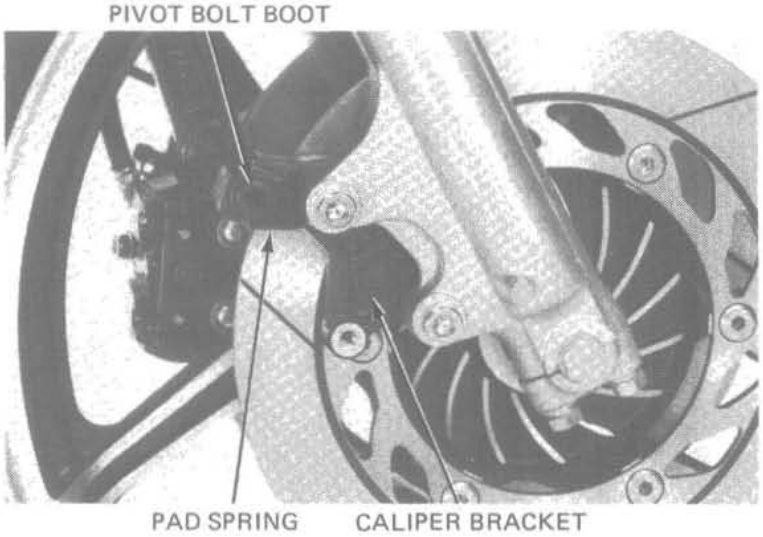

Install the caliper pivot bolt, if it is removed.

TORQUE: **25–30 N·m (2.5–3.0 kg-m, 18–22 ft-lb)**

Install the caliper bolt.

TORQUE: **20–25 N·m (2.0–2.5 kg-m, 14–18 ft-lb)**

Connect the brake hose and fill the brake fluid reservoir. Bleed the front brake system (page 16-4).

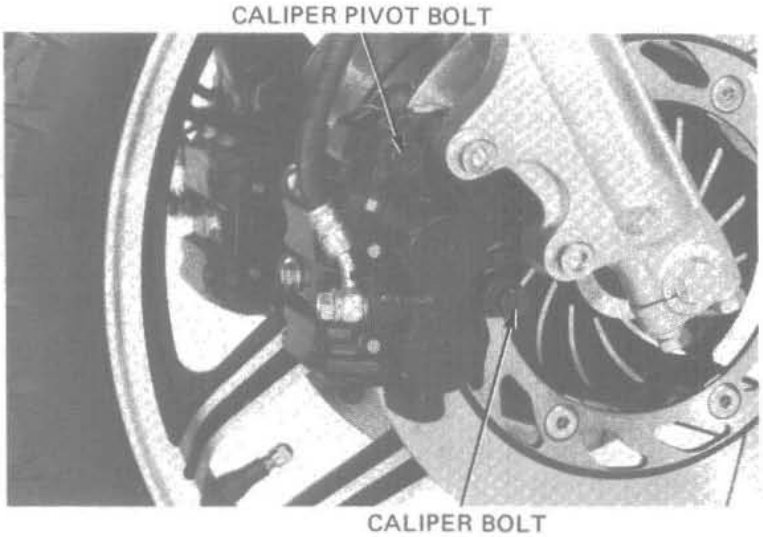

V45 SABRE

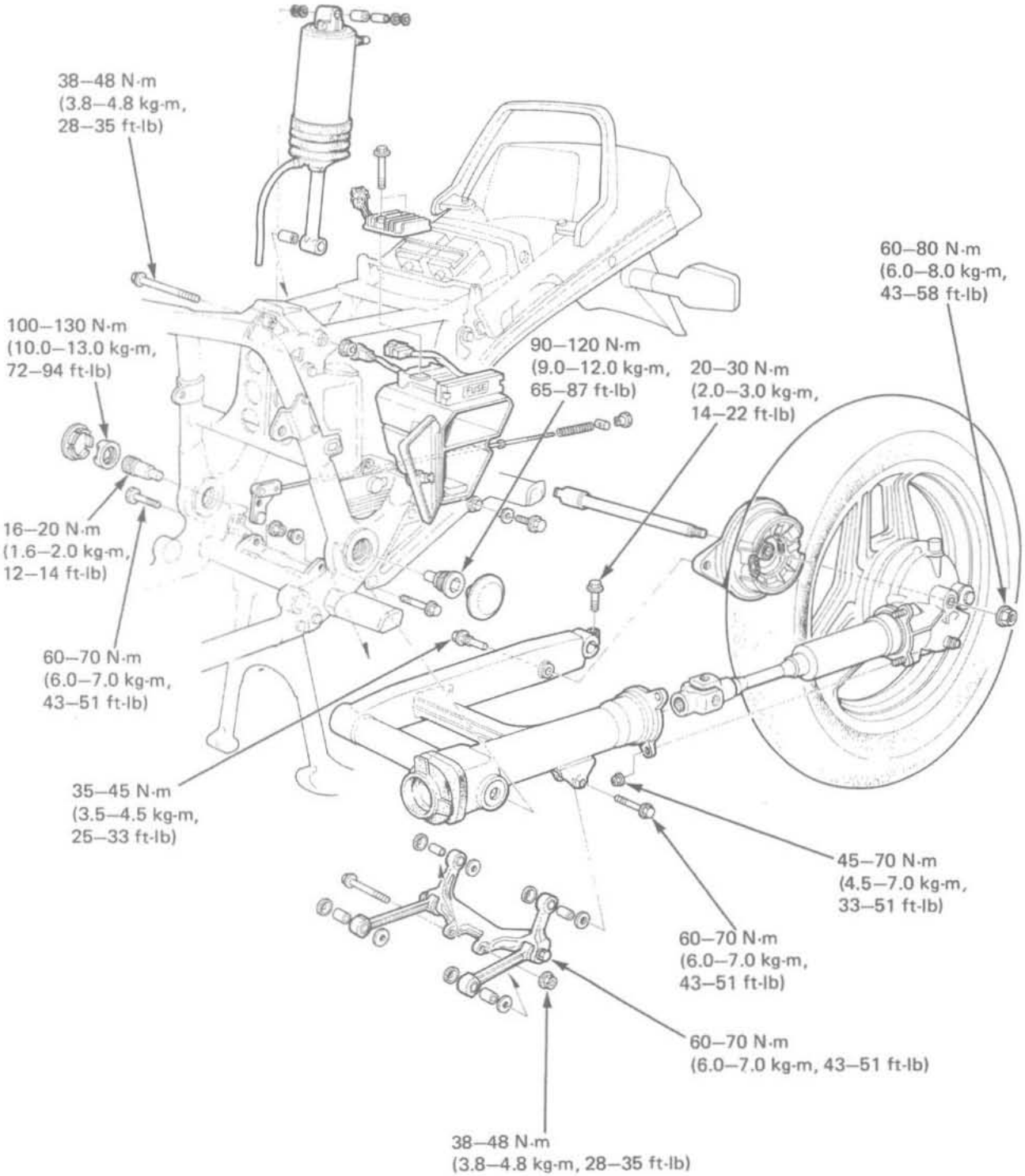

Date of Issue: May, 1982

17. REAR WHEEL/SUSPENSION/BRAKE

V45 MAGNA

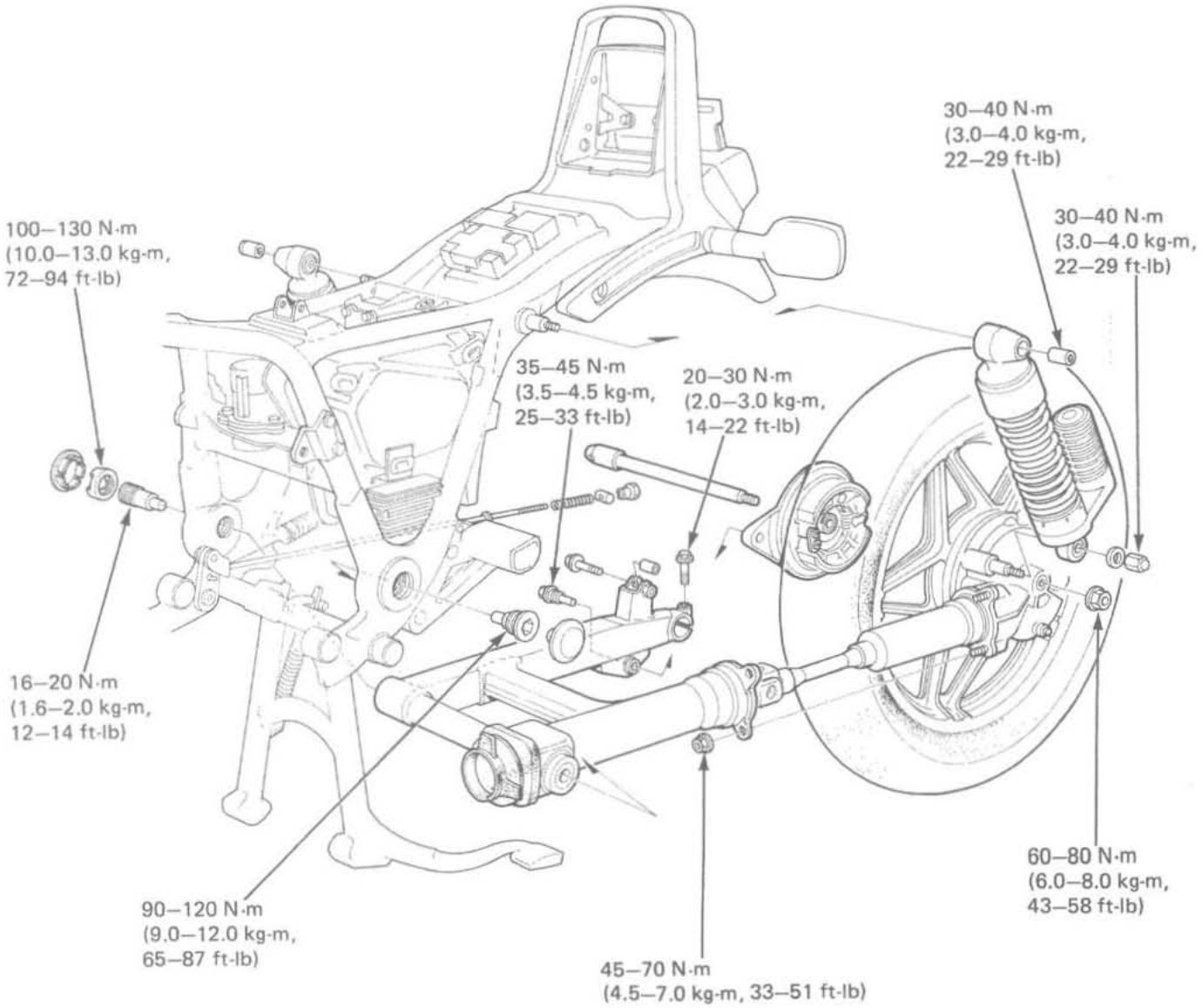

17

SERVICE INFORMATION

GENERAL

- The rear wheel uses a tubeless tire. For tubeless tire repairs, refer to the TUBELESS TIRE MANUAL.
- Never ride on the rim.

SPECIFICATIONS

		STANDARD	SERVICE LIMIT
Axle runout		—	0.2 mm (0.01 in)
Rear wheel rim runout	Radial	—	2.0 mm (0.08 in)
	Axial	—	2.0 mm (0.08 in)
Wheel bearing play		—	0.03 mm (0.001 in)
Shock absorber air pressure (V45 SABRE)		100–400 kPa (1.0–4.0 kg/cm^2, 14–57 psi)	—
Shock absorber spring free length (V45 MAGNA)		226.8 mm (8.93 in)	223 mm (8.8 in)
Brake drum I.D.		160.0–160.3 mm (6.30–6.31 in)	161 mm (6.34 in)
Rear brake lining thickness		4.9–5.0 mm (0.19–0.20 in)	2.0 mm (0.08 in)

TORQUE VALUES

Rear axle nut		60–80 N·m (6.0–8.0 kg-m, 43–58 ft-lb)
Brake panel stop bolt		35–45 N·m (3.5–4.5 kg-m, 25–33 ft-lb)
Axle pinch bolt		20–30 N·m (2.0–3.0 kg-m, 14–22 ft-lb)
Brake arm		24–30 N·m (2.4–3.0 kg-m, 17–22 ft-lb)
Shock absorber mount bolt	(V45 SABRE)	38–48 N·m (3.8–4.8 kg-m, 28–35 ft-lb)
	(V45 MAGNA)	30–40 N·m (3.0–4.0 kg-m, 22–29 ft-lb)
Shock link-to-frame bolt (V45 SABRE)		60–70 N·m (6.0–7.0 kg-m, 43–51 ft-lb)
Shock link-to-shock arm bolt (V45 SABRE)		60–70 N·m (6.0–7.0 kg-m, 43–51 ft-lb)
Shock arm-to-swingarm bolt (V45 SABRE)		60–70 N·m (6.0–7.0 kg-m, 43–51 ft-lb)
Swingarm left pivot bolt		90–120 N·m (9.0–12.0 kg-m, 65–87 ft-lb)
Swingarm right pivot bolt		16–20 N·m (1.6–2.0 kg-m, 12–14 ft-lb)
Swingarm pivot lock nut		100–130 N·m (10.0–13.0 kg-m, 72–94 ft-lb)
Final drive case attaching nut		45–70 N·m (4.5–7.0 kg-m, 33–51 ft-lb)

TOOLS

Special	Shock absorber compressor attachment	07959–MB10000	
	Swingarm pivot lock nut wrench	07908–4690001	or KS–HBA–08–469 (U.S.A. ONLY)
	Socket bit, 17 mm	07703–0020500	Commerccially available in U.S.A.
	Swingarm bearing remover	07936–4150000	or bearing remover, 30 mm
	Slide hammer handle	07936–3710100	07936–8890300 (U.S.A.)
	Sliding hammer weight	07936–3710200	
Common	Driver	07749–0010000	
	Attachment, 42 x 47 mm	07746–0010300	
	Pilot, 17 mm	07746–0040400	
	Attachment, 37 x 40 mm	07746–0010200	
	Shock absorber compressor	07959–3290001	
	Shaft remover	07936–3230100	

TROUBLESHOOTING

Oscillation
1. Bent rim
2. Loose wheel bearings
3. Faulty tire
4. Loose axle
5. Tire pressure incorrect
6. Swingarm bearings worn
7. Worn tires

Soft suspension
1. Weak spring(s)
2. Insufficient fluid in shock absorber (V45 SABRE)
3. Shock absorber air pressure incorrect (V45 SABRE)

Hard suspension
1. Incorrect fluid weight in shock absorber (V45 SABRE)
2. Bent shock absorber
3. Shock absorber air pressure incorrect (V45 SABRE)

Suspension noise
1. Shock case binding
2. Loose fasteners

Date of Issue: October, 1982

REAR WHEEL

REMOVAL

Place the motorcycle on its center stand and loosen the axle nut.

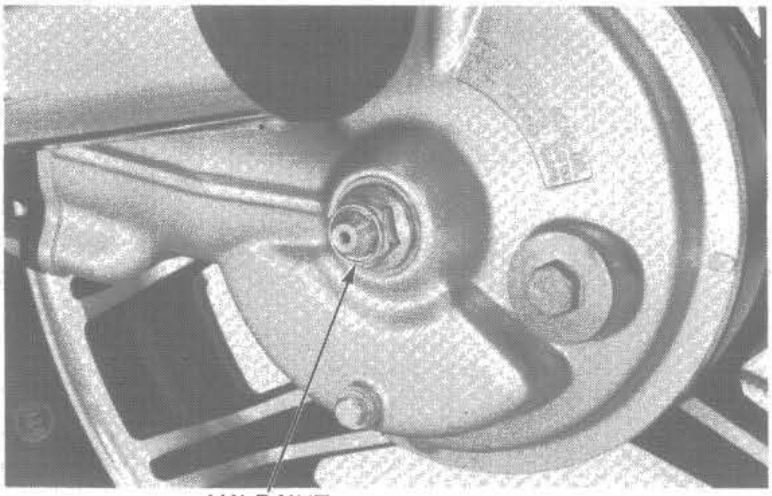

Remove the brake panel stop bolt cap, and stop bolt.
Remove the brake adjusting nut and the brake rod.
Loosen the axle pinch bolt and remove the rear axle.

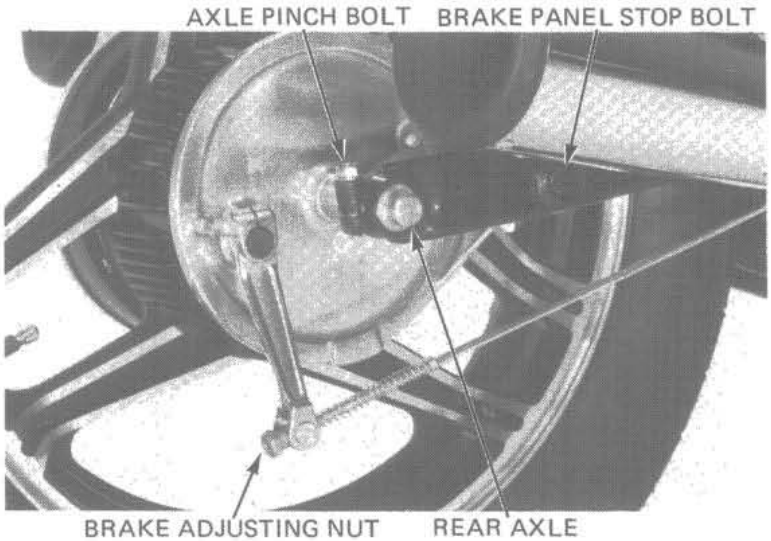

Move the wheel to the right to separate it from the final drive gear case.
Remove the rear wheel.

DISASSEMBLY

Lift the final drive flange out of the hub.

NOTE

> Do not try to loosen the final drive flange nuts. The bolts are press fitted and the nuts are staked.

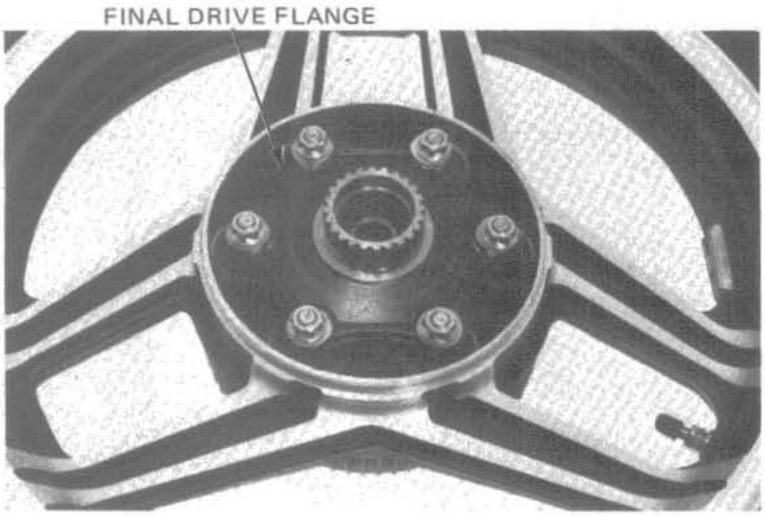

INSPECTION

AXLE

Set the axle in V blocks and read the axle runout with a dial indicator.
The actual axle runout is 1/2 of total indicator reading.

SERVICE LIMIT: 0.2 mm (0.01 in)

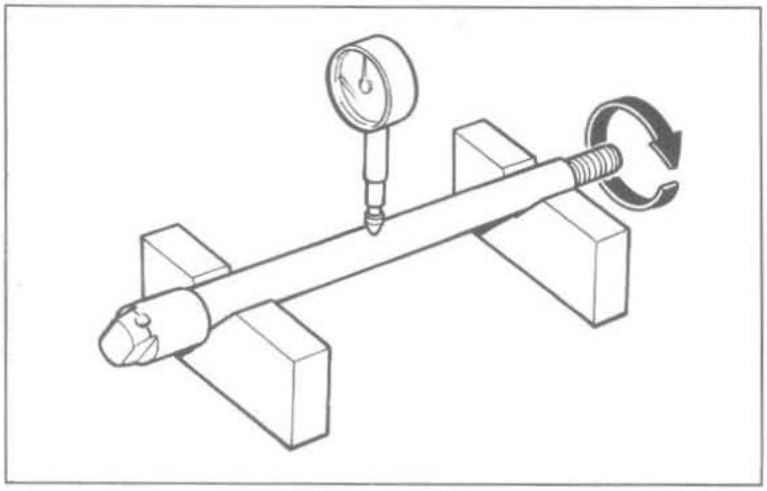

WHEEL BEARINGS

Place the wheel in a truing stand and check the wheel bearing play by rotating the wheel by hand. Replace the bearings with new ones if they are noisy or have excessive play.

SERVICE LIMIT: 0.03 mm (0.001 in)

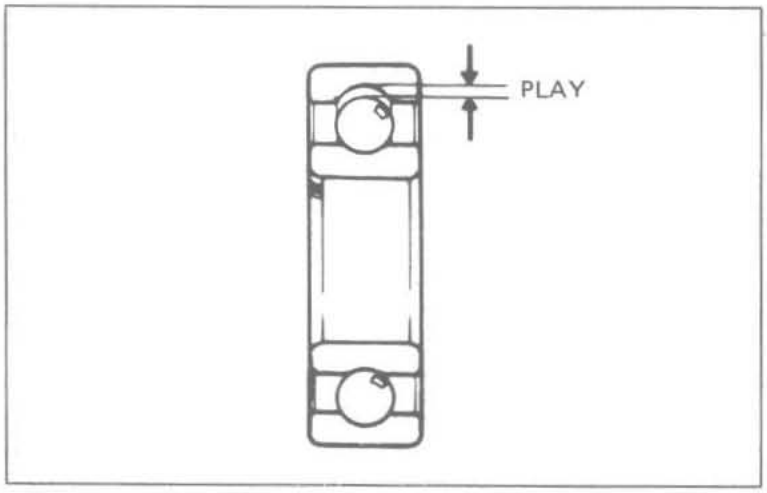

WHEEL RIM RUNOUT

Check the rim for runout by placing the wheel in a truing stand. Spin the wheel slowly, and read the runout using a dial indicator.

SERVICE LIMITS:
RADIAL RUNOUT: 2.0 mm (0.08 in)
AXIAL RUNOUT: 2.0 mm (0.08 in)

The wheel cannot be serviced and must be replaced if the above limits are exceeded.

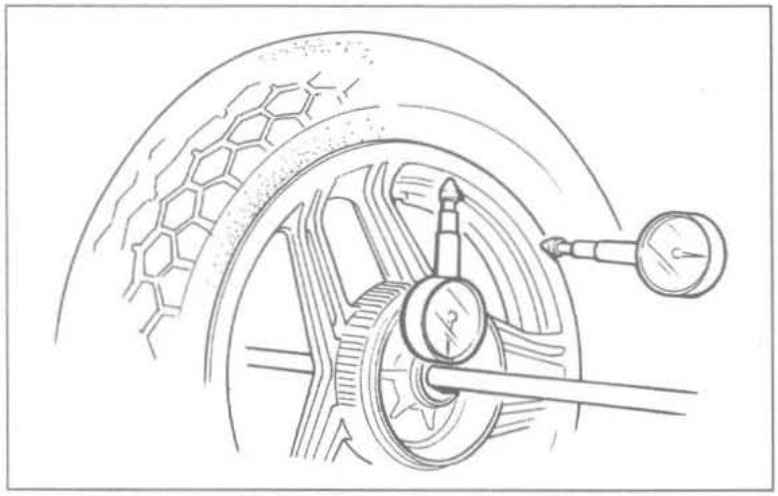

DAMPER RUBBER

Replace the wheel if they are damaged or deteriorated.

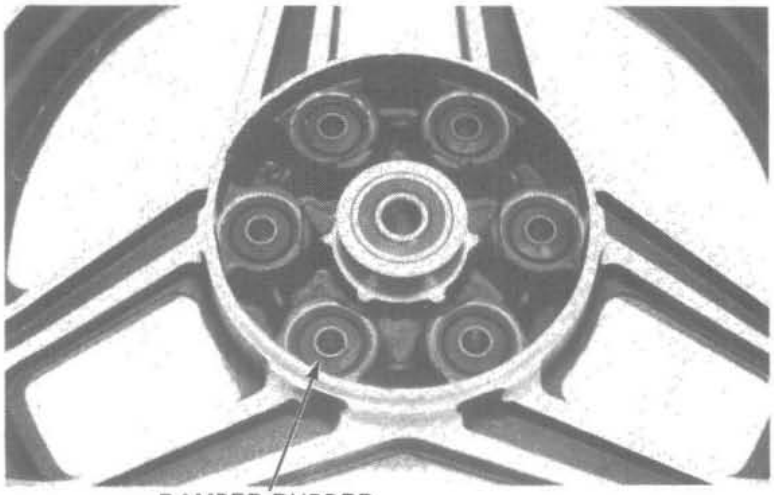

BRAKE DRUM I.D.

Measure the brake drum I.D.

SERVICE LIMIT: 161 mm (6.34 in)

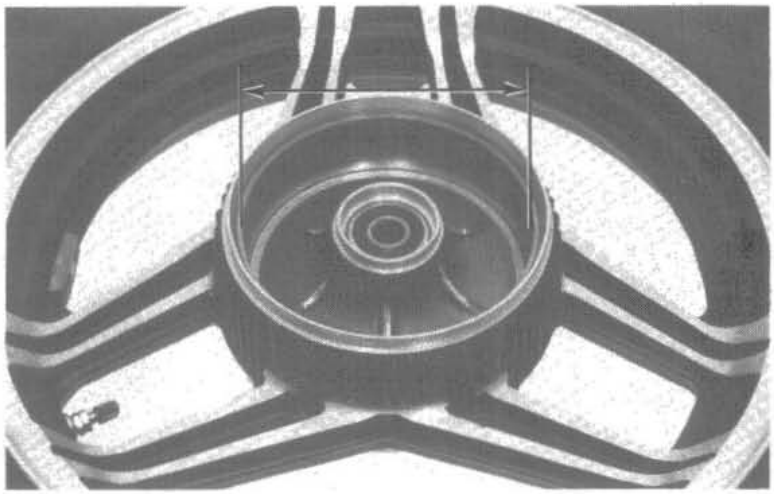

ASSEMBLY

NOTE

Use lithium-based MULTIPURPOSE grease with MoS2-additive as follows:

- MOLYKOTE BR2-S manufactured by Dow Corning, U.S.A.
- MULTIPURPOSE M-2 manufactured by Mitsubishi Oil, Japan
- STA-LUBE NLGI #2.
- Other lubricants of equivalent quality.
- The wheel uses a tubeless tire. For tubeless tire repairs, refer to TUBELESS TIRE MANUAL.

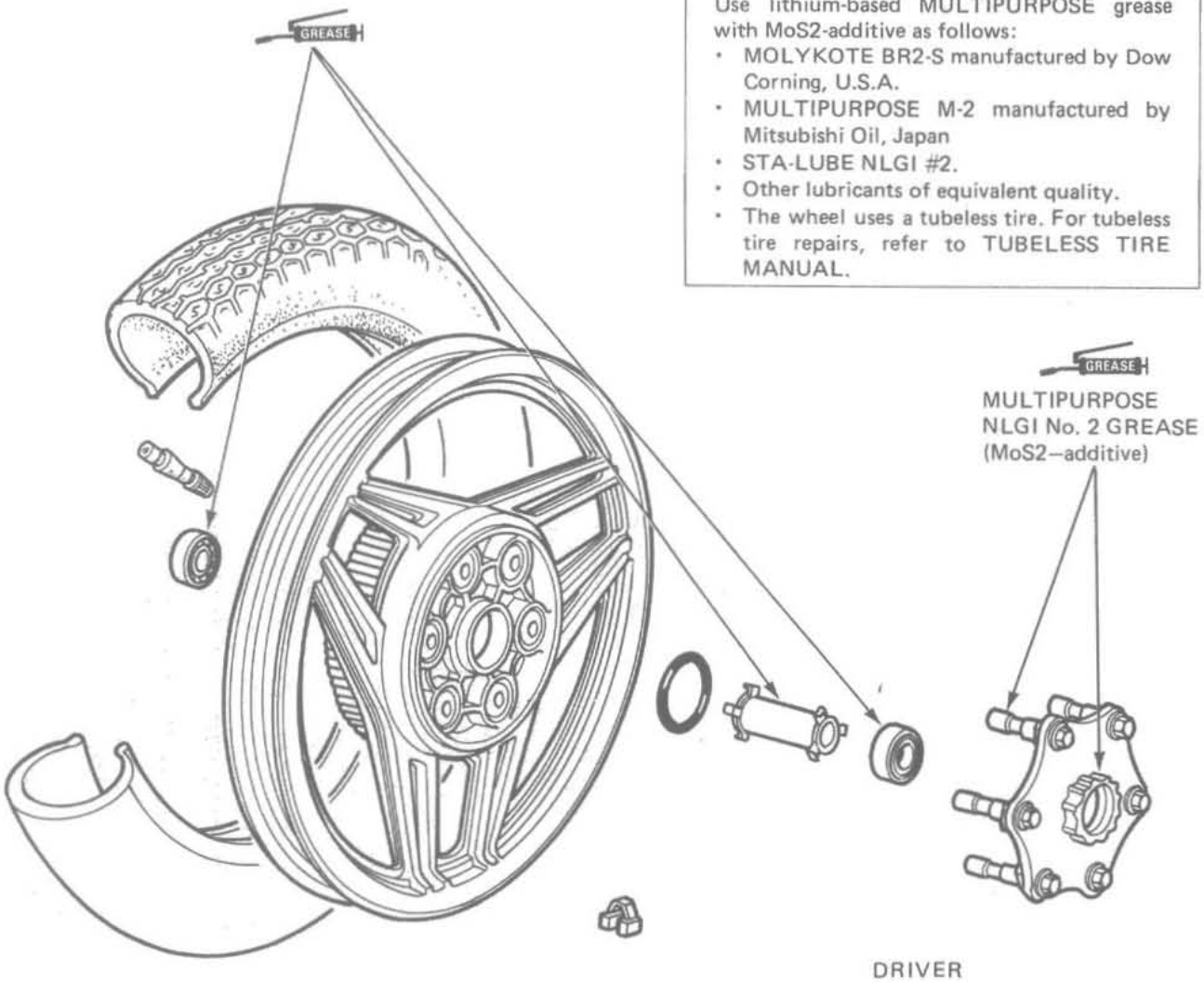

Pack all bearing cavities with grease.
Press the distance collar into place from the left side. Drive the right ball bearing in first, then the left ball bearing.

CAUTION

- *Drive the bearings in squarely.*
- *Install the bearings with the sealed end facing out, making sure they are fully seated.*

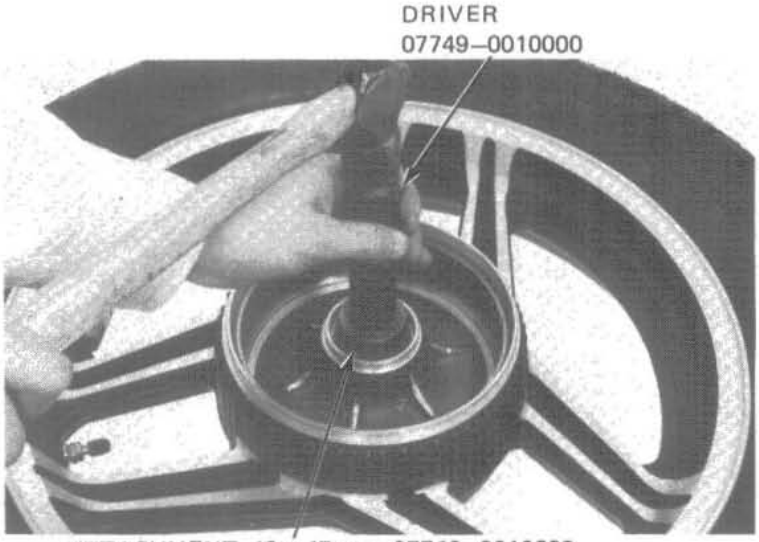

Date of Issue: May, 1982

Apply Multipurpose NLGI No. 2 grease (MoS2-additive) to the final driven flange splines and pins.

Install the final driven flange into the rear wheel.

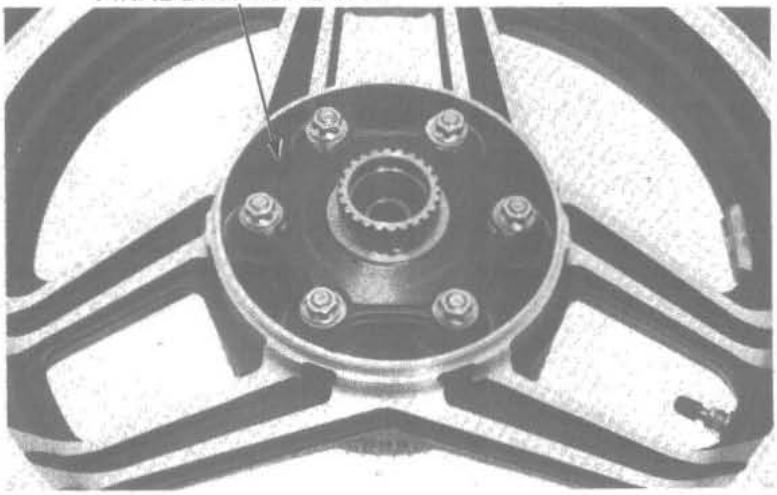

INSTALLATION

Apply Multipurpose NLGI No. 2 grease (MoS2-additive) to the ring gear's final driven flange engagement splines.

Engage the rear wheel with the final drive case, making sure the splines are correctly aligned.

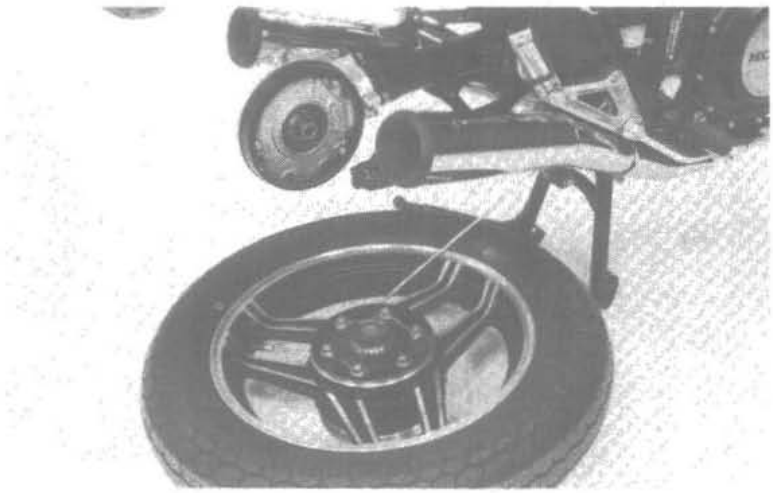

Loosen the three final gear case nuts.

Insert the rear axle through the swingarm, side collar, brake panel, hub and final drive gear.
Tighten the axle nut.

TORQUE: 60–80 N·m (6.0–8.0 kg-m, 43–58 ft-lb)

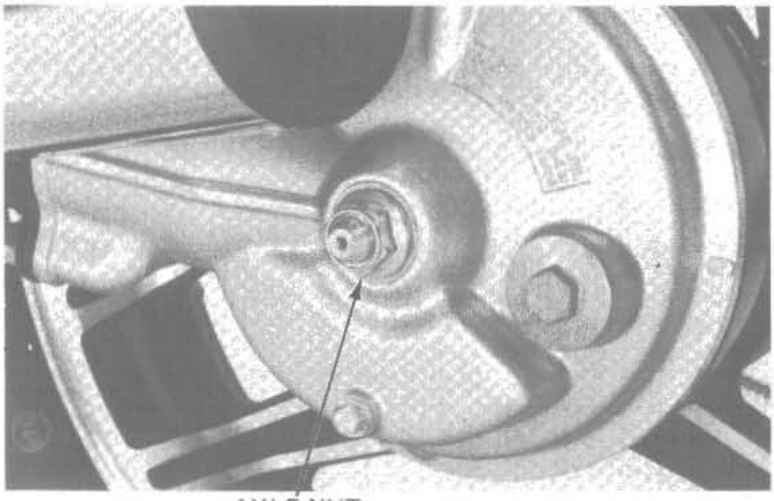

Tighten the three gear case nuts.

TORQUE: 60–70 N·m (6.0–7.0 kgm, 53–51 ft-lb)

Tighten the axle pinch bolt.

TORQUE: 20–30 N·m (2.0–3.0 kg-m, 14–22 ft-lb)

Place the brake rod through the brake arm pin and install the brake adjusting nut.

Tighten the brake panel stop bolt.

TORQUE: 35–45 N·m (3.5–4.5 kg-m, 25–33 ft-lb)

Adjust the rear brake (page 3-17).

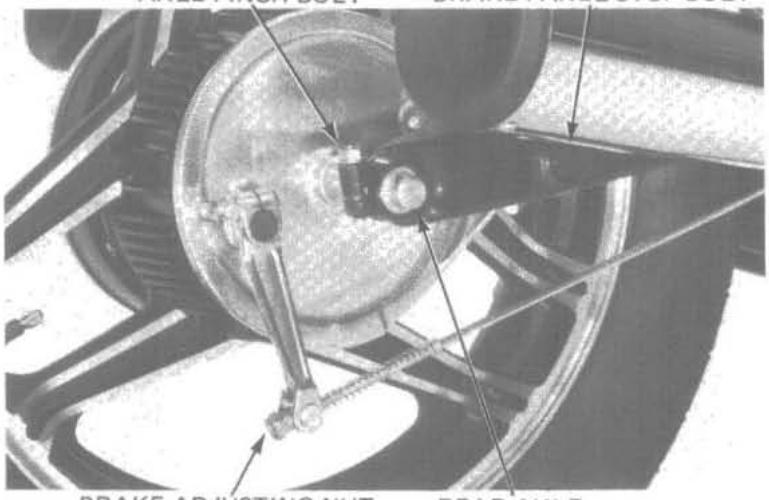

REAR BRAKE PANEL

LINING THICKNESS INSPECTION

Measure the rear brake lining thickness.

SERVICE LIMIT: 2.0 mm (0.08 in)

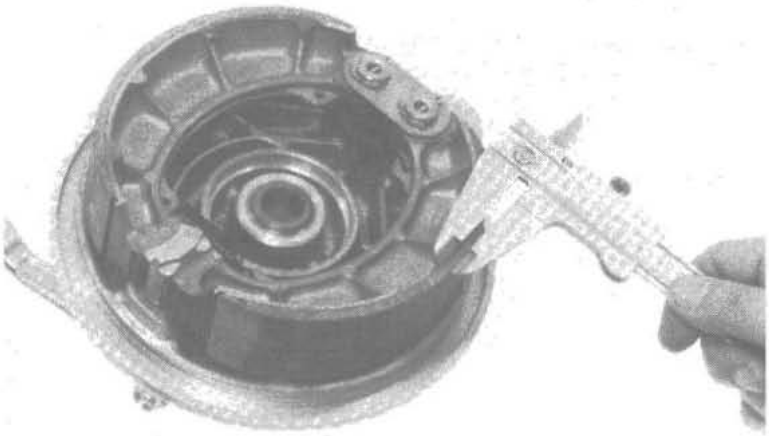

DISASSEMBLY

Remove the rear brake arm.
Remove the cotter pins and brake shoes.

ASSEMBLY

Apply grease to the anchor pins and brake cam.

WARNING

Contaminated brake linings reduce stopping power. Keep grease off the brake linings. Wipe any excess grease off the cam.

Install the brake cam.
Install the brake shoes.
Install new cotter pins.

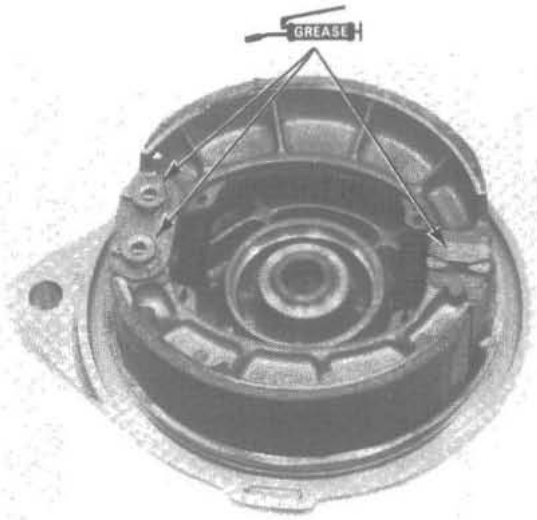

Install the felt seal and wear indicator.

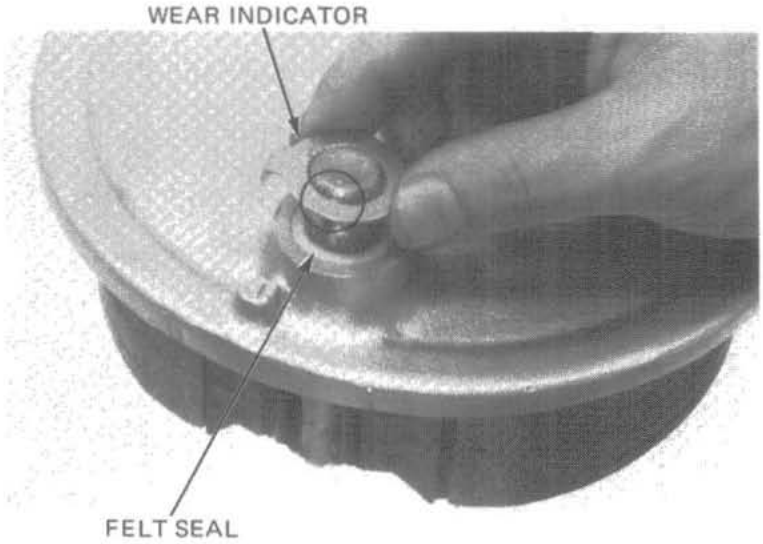

Install the brake arm, aligning the punch marks and tighten the brake arm bolt.

TORQUE: 24–30 N·m (2.4–3.0 kg-m, 17–22 ft-lb)

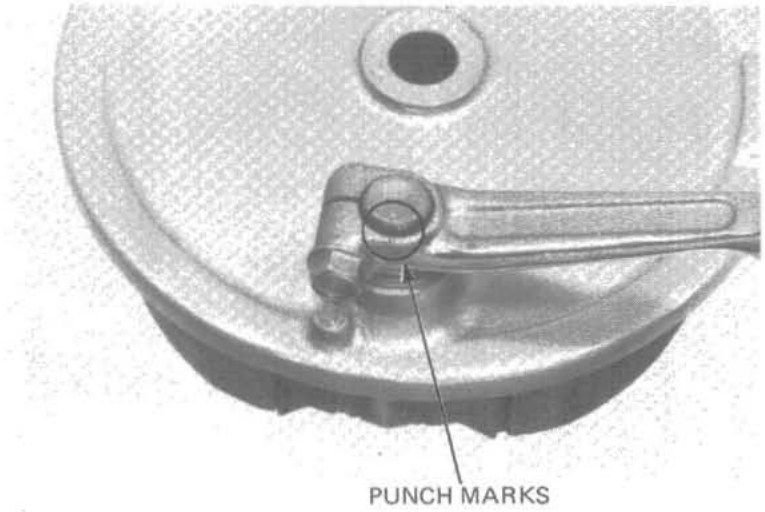

SHOCK ABSORBER (V45 SABRE)

REMOVAL

Remove the frame side covers, seat and tool box.

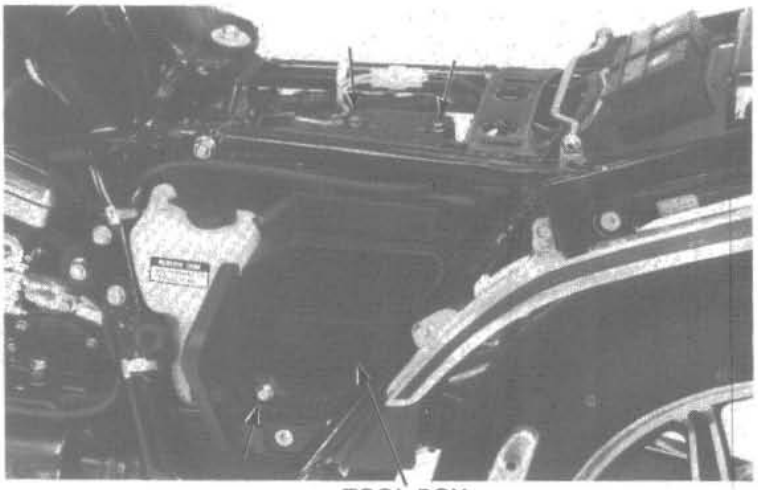

TOOL BOX

Remove the shock absorber lower mounting bolt.

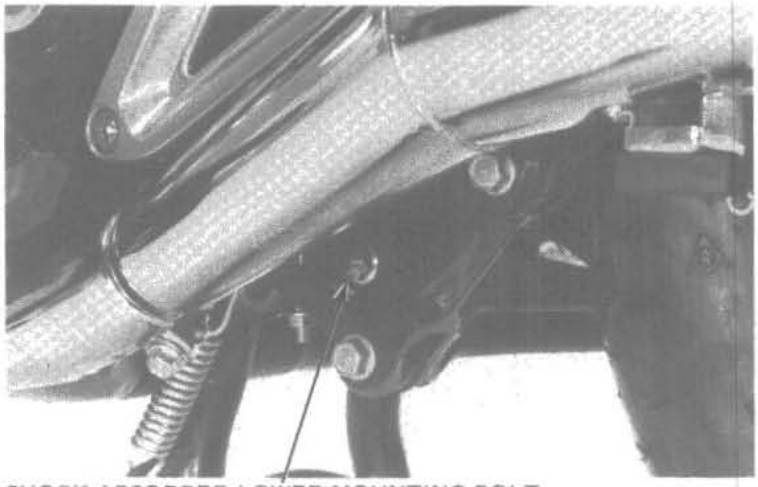

SHOCK ABSORBER LOWER MOUNTING BOLT

Remove the shock absorber upper mounting bolt and remove the shock absorber from the frame.

SHOCK ABSORBER

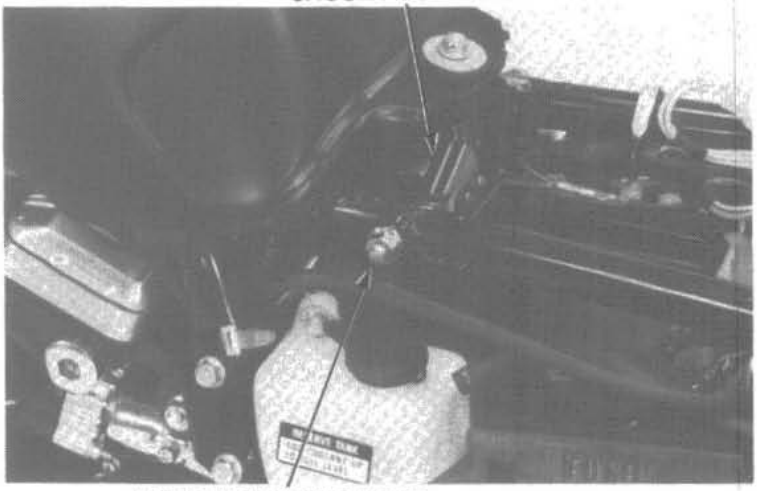

UPPER MOUNTING BOLT

OIL SEAL REPLACEMENT

Remove the shock case boot.

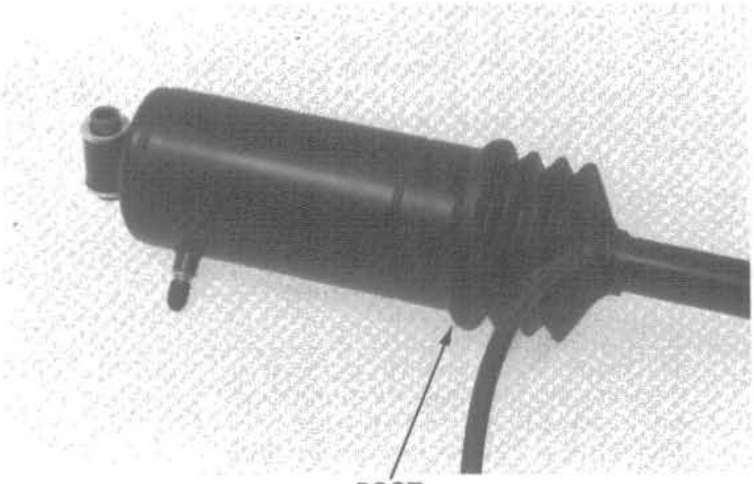

Remove the air valve cap and release air pressure by depressing the air valve stem.

Remove the air valve stem and connect a hose to the air valve hole of the shock.

Press the back-up plate and oil seal in with the oil seal driver.
Remove the stop ring and remove the back-up plate.

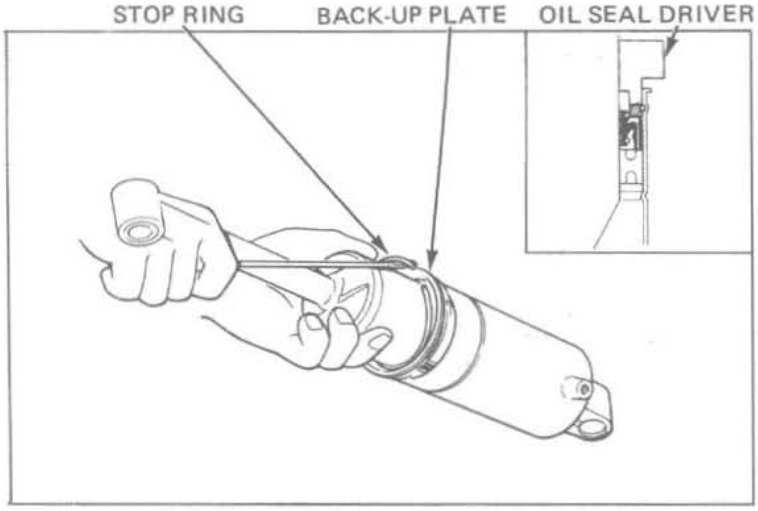

Pour 300 cc (10.1 oz) of ATF in a clean container. Place the shock absorber in a press with an Oil Seal Driver Attachment as shown.
Place the hose in the oil and compress and release the shock absorber several times until the damper is filled with oil.

CAUTION:

Do not compress the shock more than 40 mm (1.6 in).

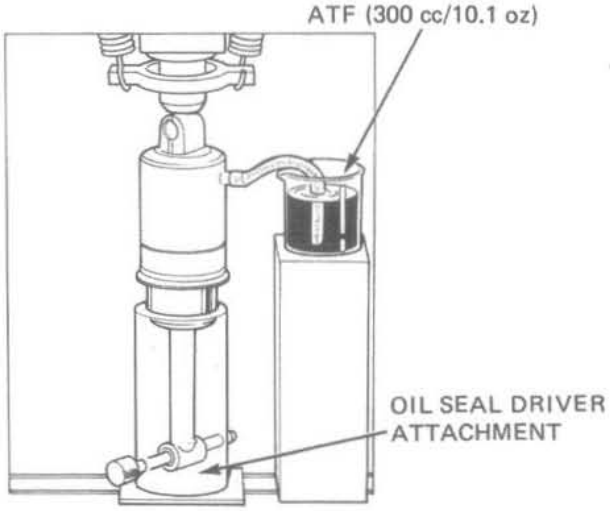

Remove the shock from the press.
Remove the hose and reinstall the air valve stem.
Place the Oil Seal Driver on the oil seal.
Place the shock absorber on the press using the Oil Seal Driver Attachment.
Press the oil seal out by compressing the shock absorber.

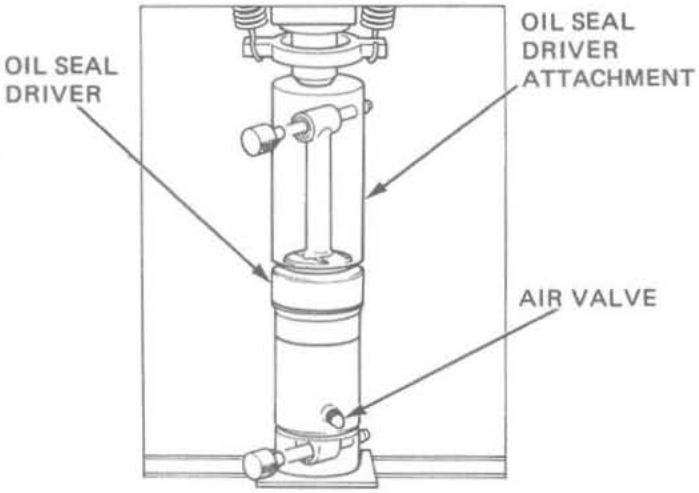

CAUTION

Place the shock absorber in the hydraulic press on its upper clevis, not on its case.

NOTE

- Spill as little ATF as possible to prevent air from entering the shock. Air in the shock will cause the damping to be too soft.
- The oil seal will not be pressed out if there is air in the ATF or if the shock absorber is not completely filled with ATF.

Remove the oil seal and case guide.
Check the case guide for wear or damage.

ASSEMBLY

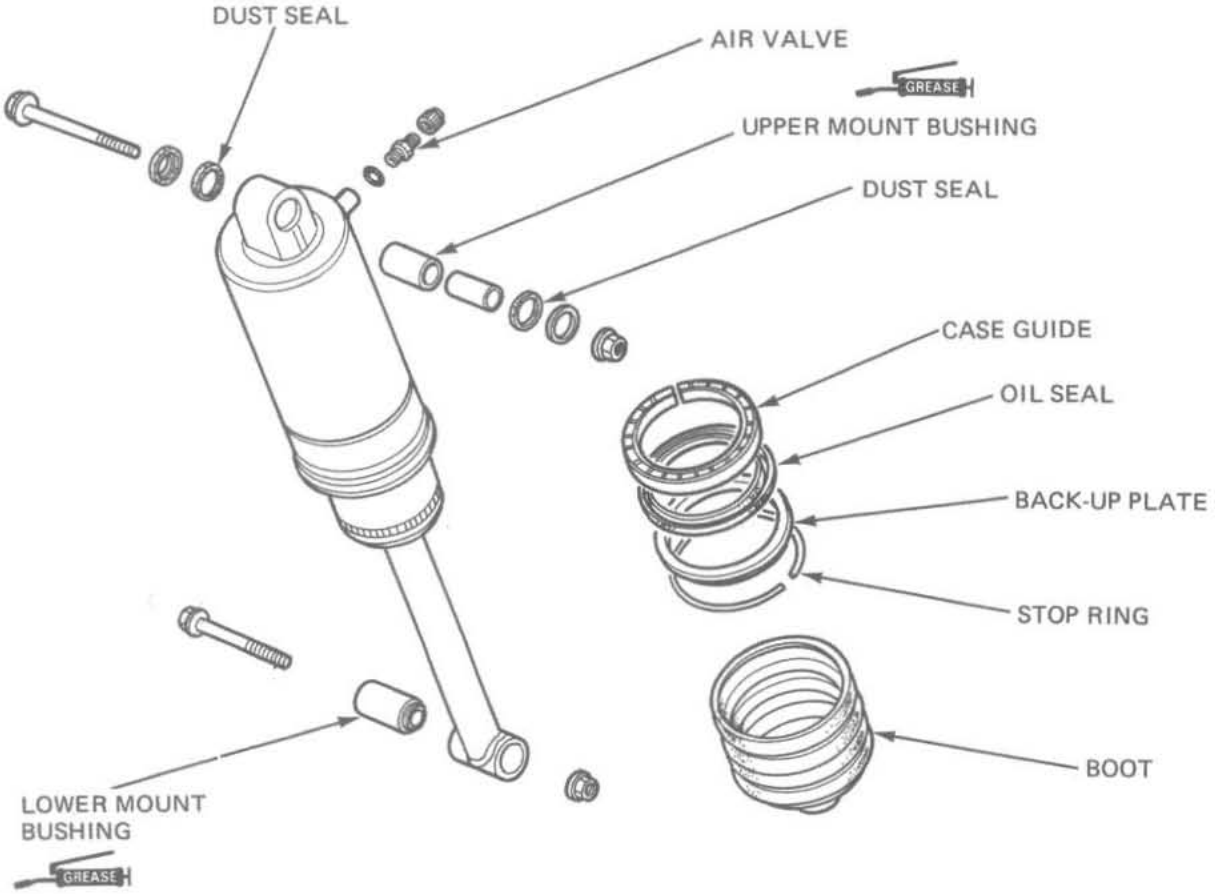

Date of Issue: May, 1982

Fill the shock absorber with ATF.
Install the case guide.

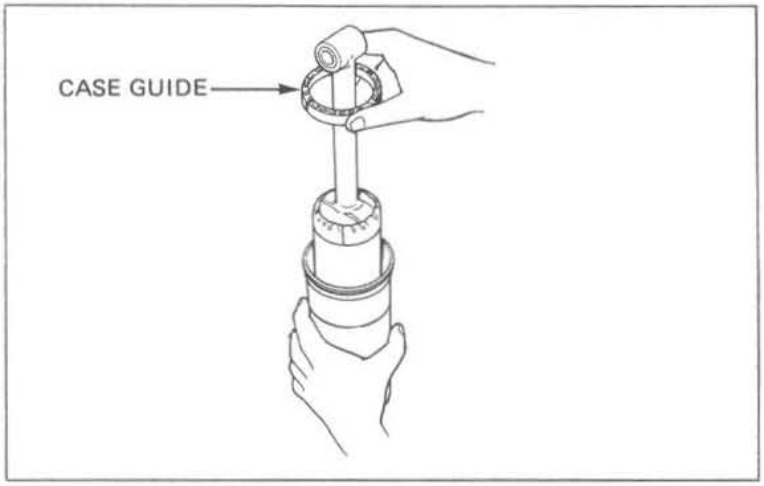

Wrap a piece of tape around the end of the shock absorber rod.
Dip a new oil seal in ATF and install it being careful not to damage the oil seal lip.

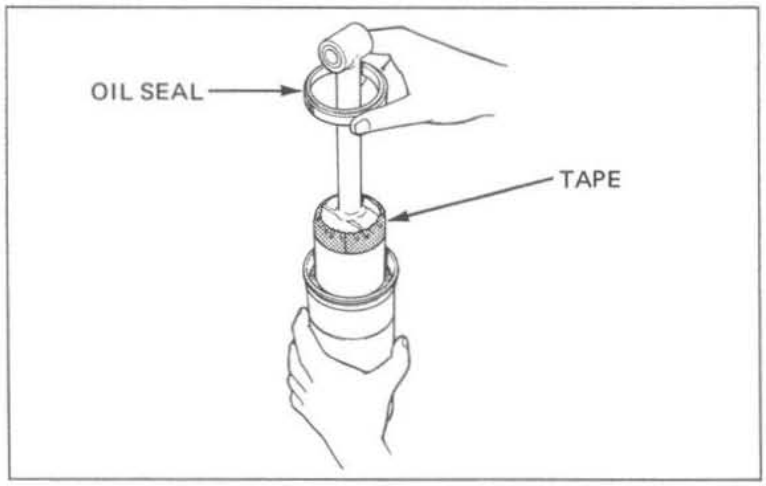

Remove the air valve stem.
Connect a hose to the air valve and position the end of the hose up.
Place the shock absorber into a hydraulic press with the oil seal driver and attachment.
Press the oil seal into the shock until the Oil Seal Driver seats against the shock case.

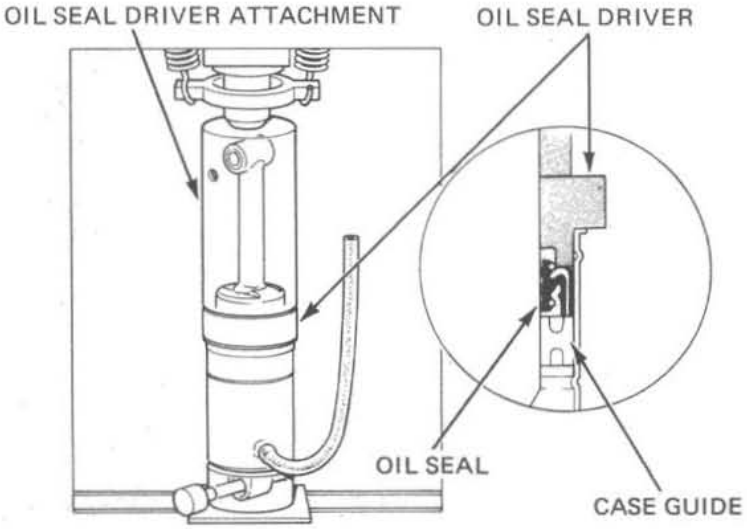

Remove the shock absorber from the press.
Install the back-up plate and stop ring.

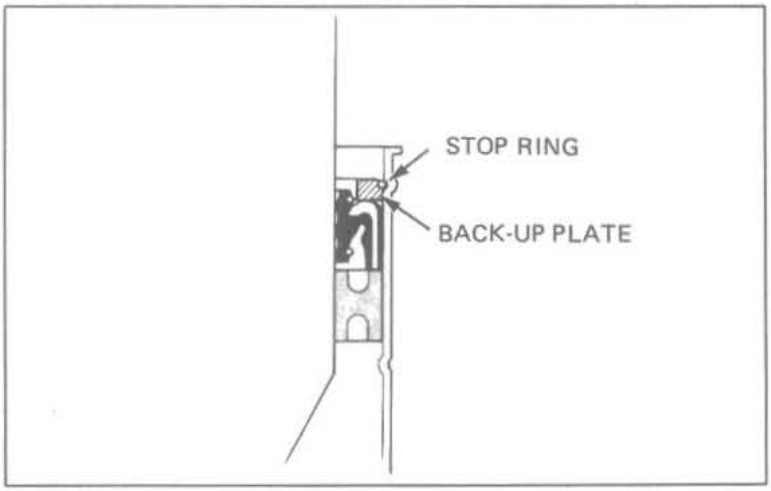

Place the shock absorber back in the press with the air valve up.
Drain 170 cc (5.8 oz) of ATF by slowly compressing the shock absorber.

ATF TO BE REMOVED: 170 cc (5.8 oz)

Remove the shock absorber from the press.
Remove the hose and install the air valve.
Install the shock case boot.

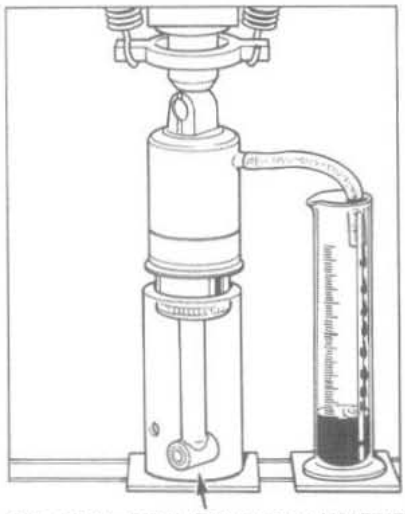

INSTALLATION

Apply paste grease (containing more than 45% of molybdenum) to the upper and lower mounting bushings.

NOTE

> Use paste grease (containing more than 45% of molybdenum) as follows:
> - *MOLYKOTE G PASTE manufactured by Dow Corning, U.S.A.
> - *Sta-Lube NLGI #2, U.S.A.
> - *Other lubricants of equivalent quality.

Install and torque the upper mount bolt.

TORQUE: 38–48 N·m (3.8–4.8 kg-m, 28–35 ft-lb)

Install and tighten the lower mount bolt.

TORQUE: 38–48 N·m (3.8–4.8 kg-m, 28–35 ft-lb)

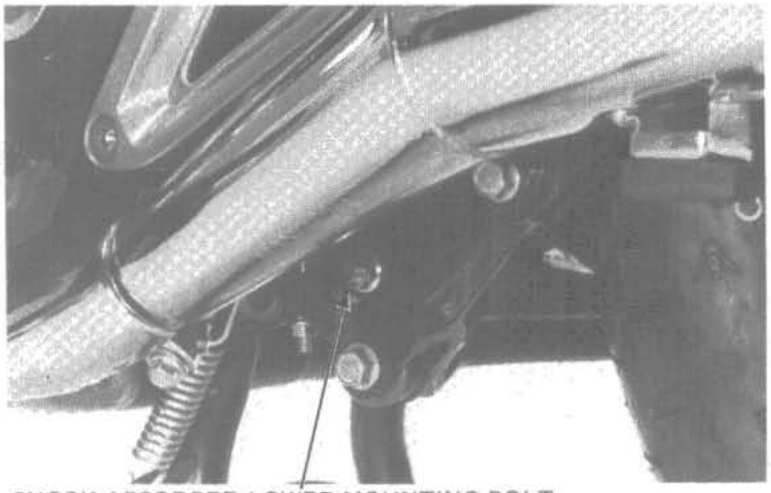

SHOCK ABSORBER LOWER MOUNTING BOLT

Install the tool box, seat and frame side covers.
Adjust the air pressure (page 3-20).

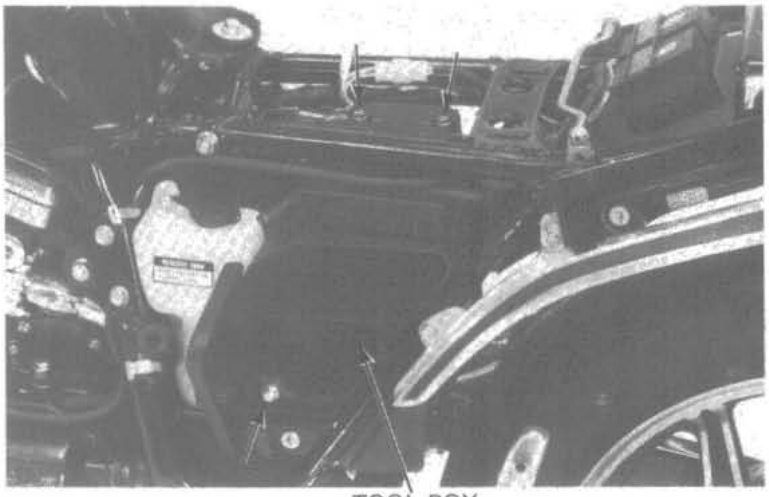

TOOL BOX

SHOCK ABSORBER LINKAGE

REMOVAL

Remove the following parts:
- Shock absorber lower mounting bolt.
- Shock arm-to-swing arm bolts.
- Shock link-to-frame bolts.
- Shock linkage assembly.

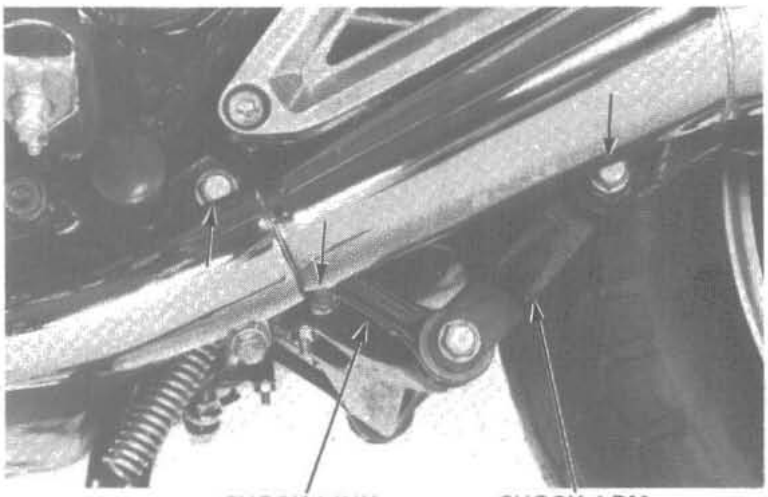

SHOCK LINK SHOCK ARM

Remove the shock arm-to-shock link bolts.

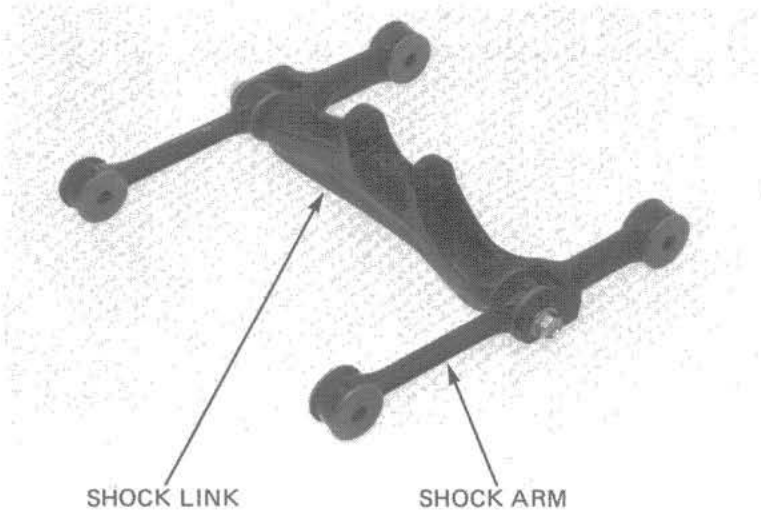

LINKAGE BUSHING INSPECTION

Check the linkage bushings for wear or damage.
Inspect the dust seals for damage.
Replace parts as necessary.

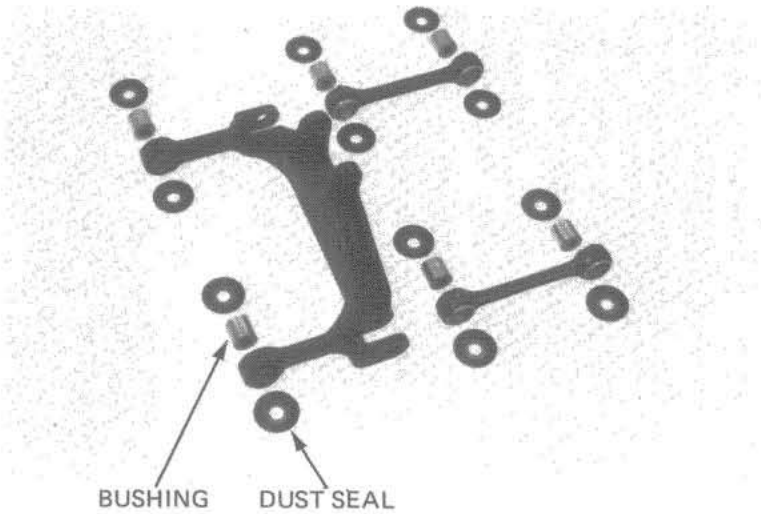

SHOCK LINKAGE INSTALLATION

Apply paste grease (containing more than 45% molybdenum) to the bushings and dust seals. See note on page 17-14.

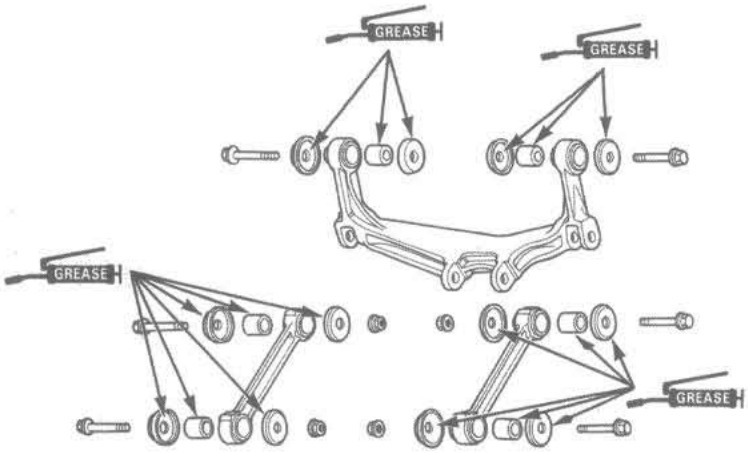

Date of Issue: May, 1982

Install the shock arms to the shock link.

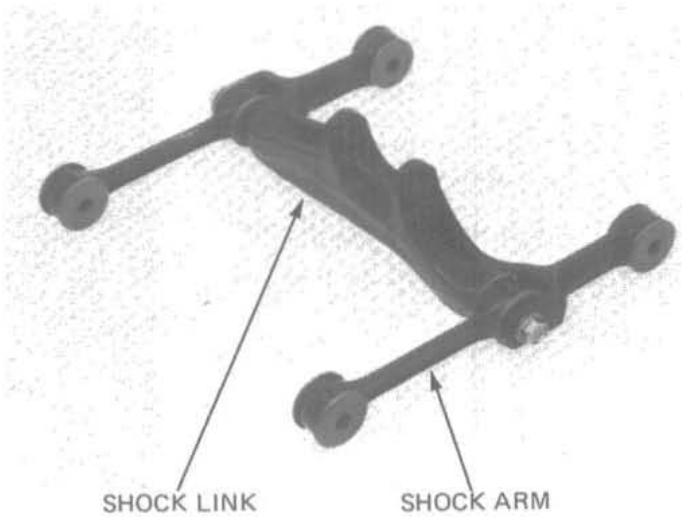

Install the shock linkage assembly and torque each bolt in the order listed.

TORQUE:

SHOCK LINK-TO-FRAME:
60–70 N·m (6.0–7.0 kg-m, 43–51 ft-lb)
SHOCK LINK-TO-SHOCK ABSORBER:
38–48 N·m (3.8–4.8 kg-m, 28–35 ft-lb)
SHOCK LINK-TO-SHOCK ARM:
60–70 N·m (6.0–7.0 kg-m, 43–51 ft-lb)
SHOCK ARM-TO-SWINGARM:
60–70 N·m (6.0–7.0 kg-m, 43–51 ft-lb)

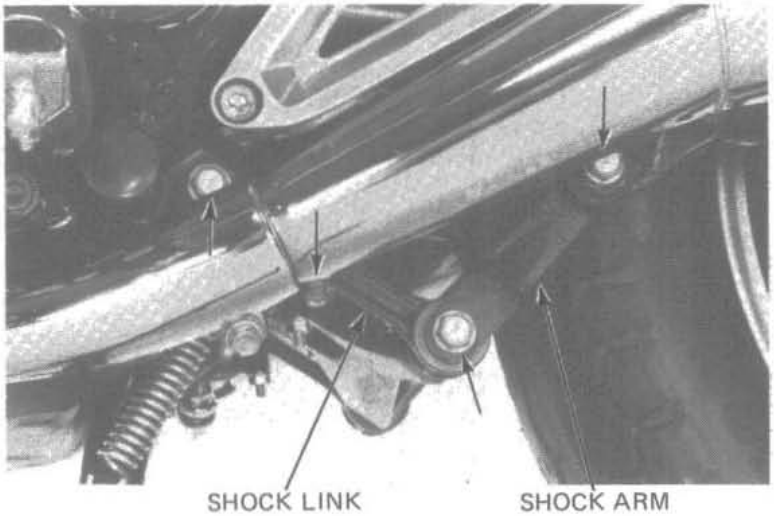

SHOCK ABSORBER (V45 MAGNA)

REMOVAL

NOTE

> Remove one shock absorber at a time to facilitate removal and installation.

Adjust the shock absorber to the softest position.

Remove the shock absorber upper and lower mounts.
Remove the shock absorber.

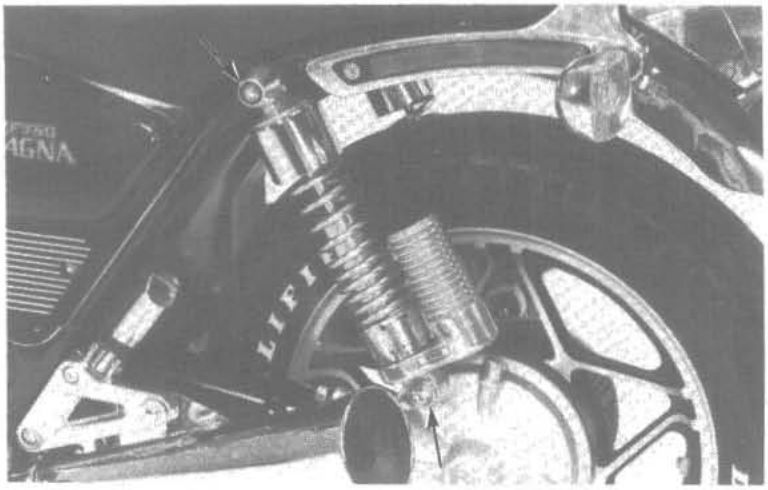

DISASSEMBLY

Replace base and guide of shock compressor, 07959–3290001 with attachments, 07959–MB10000.
Place the collar, 52486–463–0000 or equivalent in the shock's bottom joint before putting shock in compressor.
Set the rear cushion in the compressor as shown and compress the spring 30 mm by turning the compressor handle.

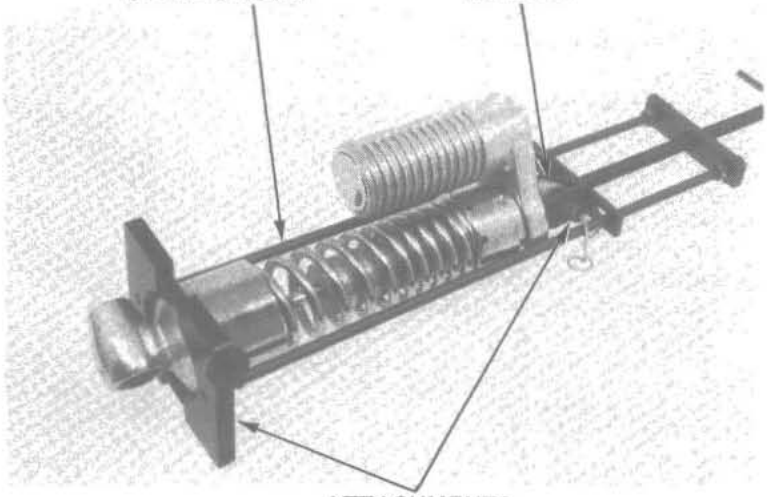

Place the upper joint in a vise and pull the shock rod out.

NOTE

> Loosen the holder nut to aid removal of the damper.

Separate the upper joint rotating the lock nut in the direction shown and remove the compressor.

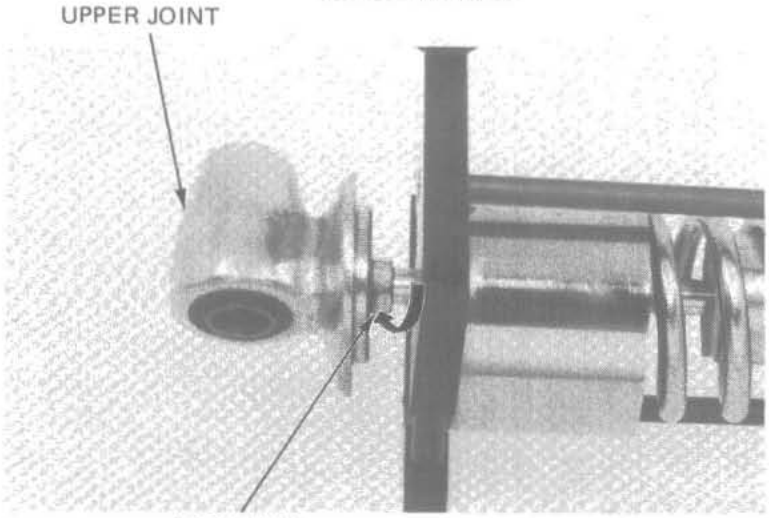

Date of Issue: October, 1982

SPRING FREE LENGTH

Measure the rear shock absorber spring free length.

SERVICE LIMIT: 223 mm (8.8 in)

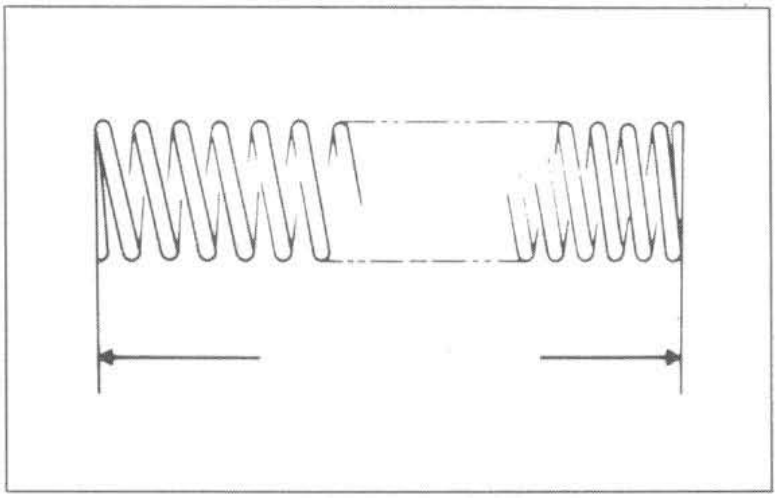

ASSEMBLY

Place the spring adjuster, the spring lower seat, spring upper seat and stopper rubber on the damper.

NOTE

Install the spring with the tightly wound end facing down.

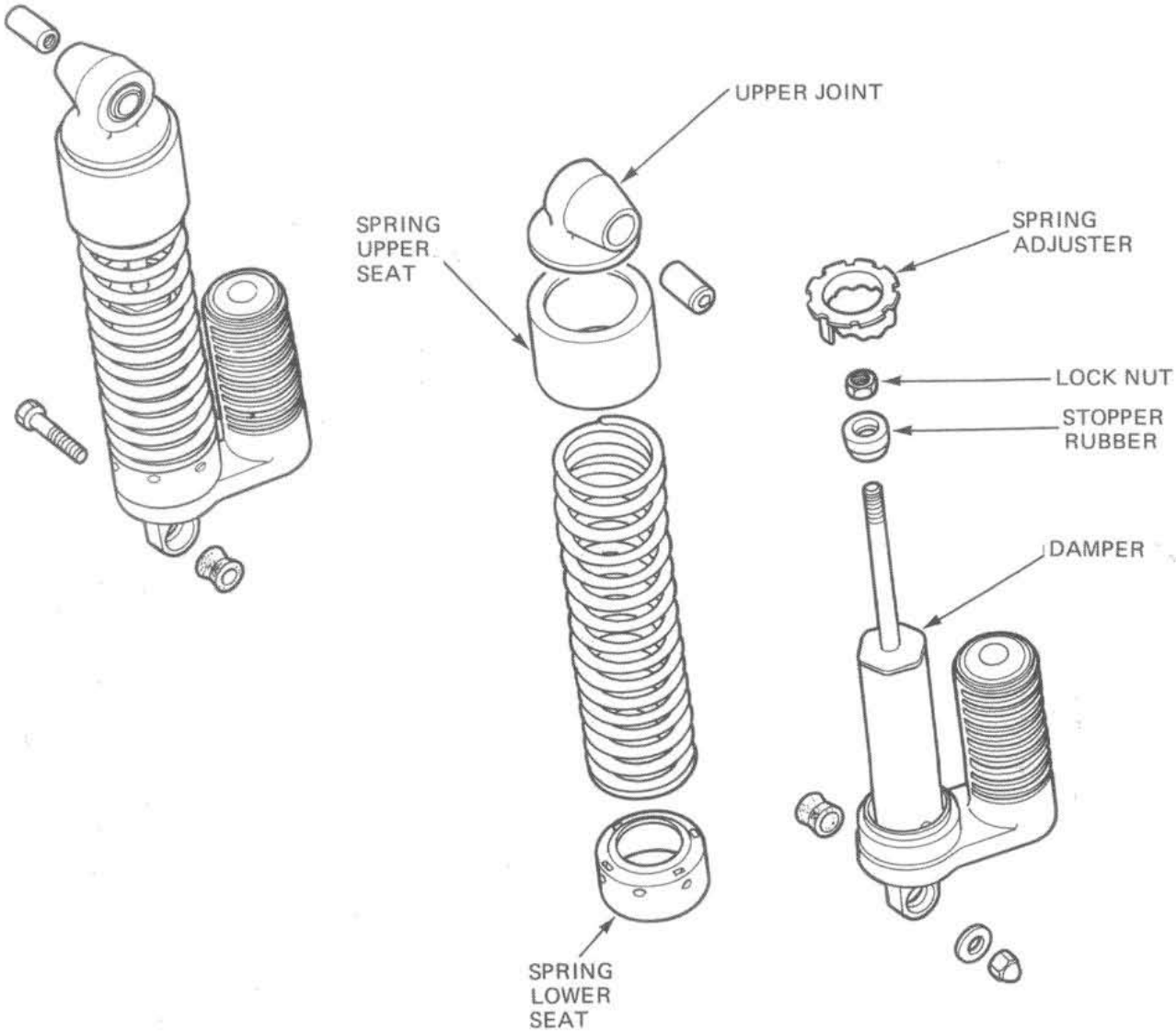

Apply a locking agent to the rod threads and install the lock nut.
Attach the shock absorber compressor screwing in the compressor's holder nut.

WARNING

Screw in the holder nut to prevent the spring from coming out of position.

Apply a locking agent to the damper rod threads and screw the upper joint on. Hold the upper joint in a vise and tighten the lock nut securely.

NOTE

Check that the lock nut is seated against the rod's bottom thread.

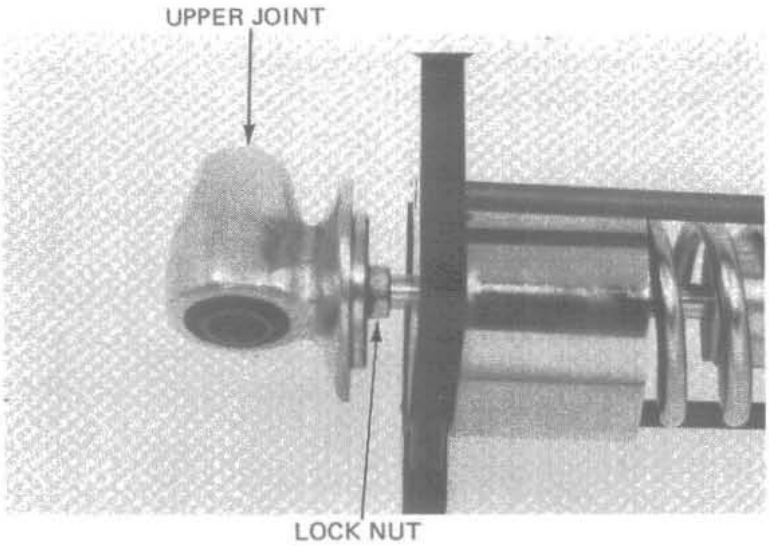

Align the spring seat with the upper joint while releasing the compressor.

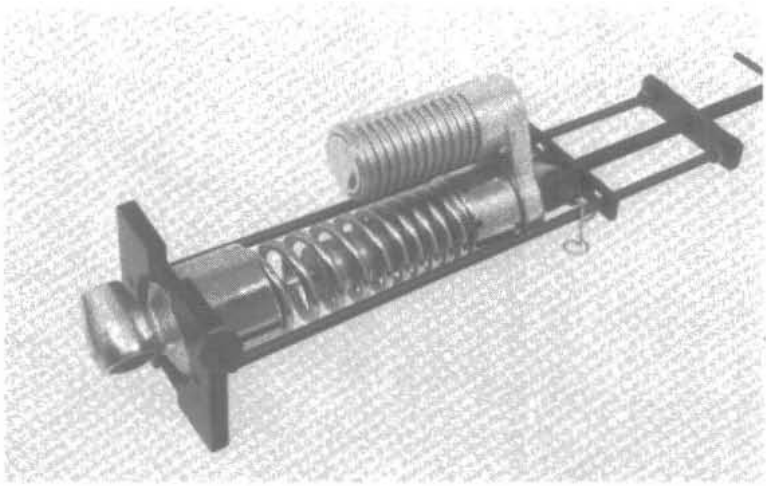

INSTALLATION

Install the shock absorber onto the frame.
Tighten the upper and lower mounts.

TORQUE: 30–40 N·m (3.0–4.0 kg-m, 22–29 ft-lb)

Adjust the shock absorber spring (page 3-20).

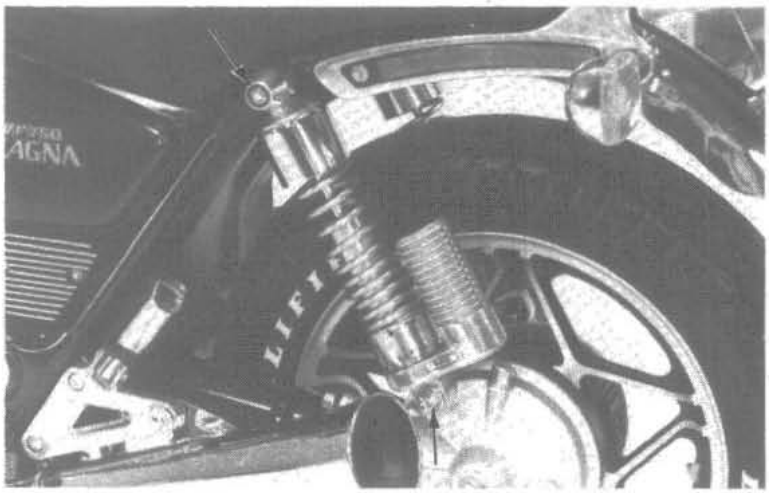

SWINGARM

REMOVAL

Remove the rear wheel (page 17-3) and the final drive gear case (page 14-3).

On the V45 SABRE, remove the shock absorber lower mount bolt and shock arm-to-swingarm bolts. On the V45 MAGNA, remove the shock absorbers.

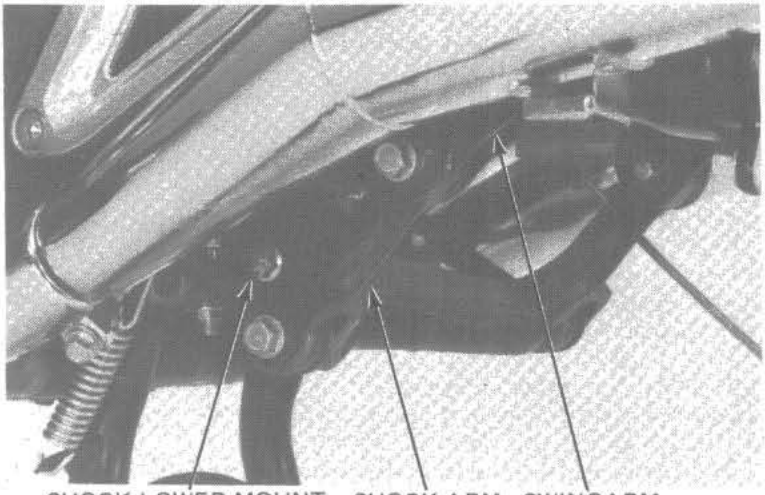

SHOCK LOWER MOUNT SHOCK ARM SWINGARM

Remove the swingarm pivot caps and loosen the right pivot bolt lock nut.

SWINGARM PIVOT LOCK NUT WRENCH 07908–4690001 OR KS–HBA–08–469 (U.S.A. ONLY)

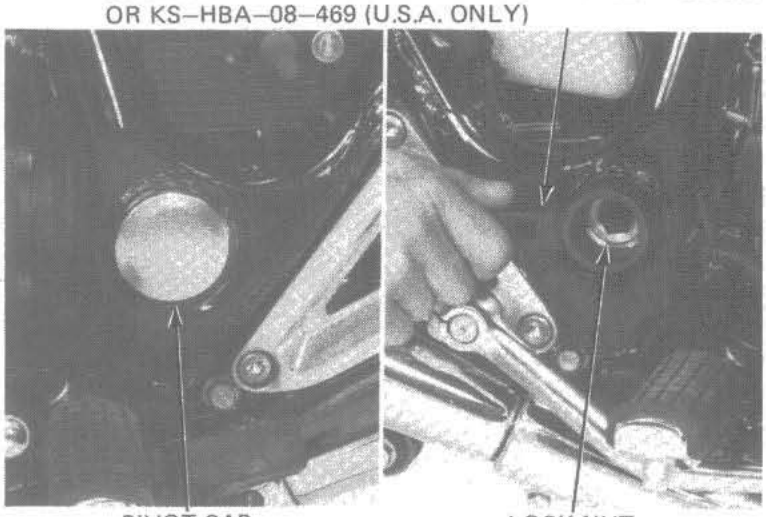

PIVOT CAP LOCK NUT

Remove the right pivot bolt, using the 17 mm socket bit.
Remove the left pivot bolt and remove the swingarm.
Remove the boot from the swingarm.

LEFT PIVOT BOLT

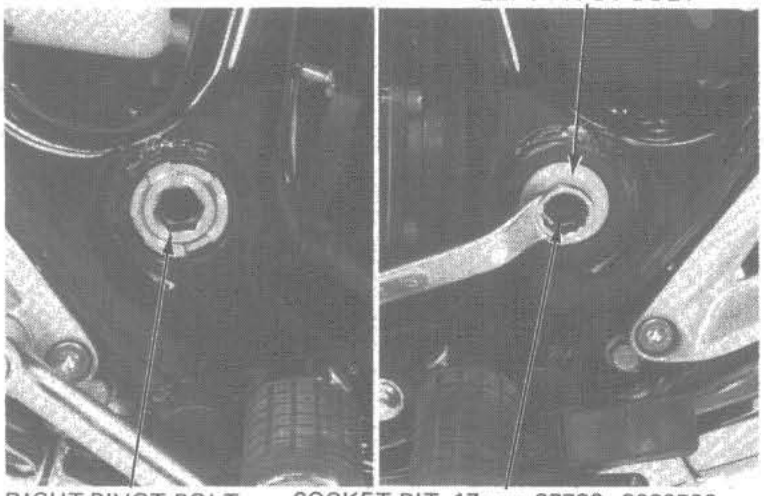

RIGHT PIVOT BOLT

SOCKET BIT, 17 mm 07703–0020500 COMMERCIALLY AVAILABLE IN U.S.A.

PIVOT BEARING REPLACEMENT

Remove the dust seals and bearings from both sides of the swingarm as follows:
Remove the right swingarm bearing first using the 30 mm bearing remover, 07936–8890300, handle 07936–3710100 and weight 07936–3710200. Install remover and expand as much as possible behind bearing race. Slide weight lightly several times to move the race out enough so that the remover can be expanded completely. Expand the remover competely. Slide weight again with enough force to remove the race.

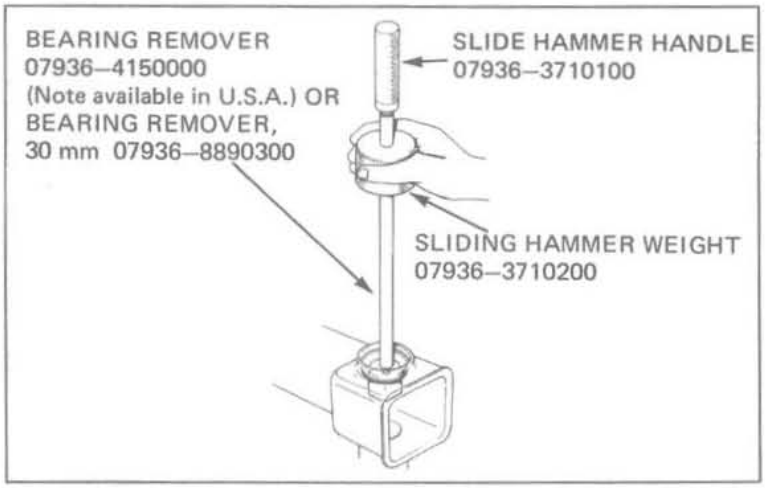

Place a 30 mm collar or equivalent through the swingarm and behind the left grease retainer plate and bearing race. Slide the shaft remover 07936–3230100 or equivalent into the collar and drive the bearing race out.

NOTE:

> Replace the bearing inner and outer races as a set. Replace the grease retainer plate whenever it is removed.

Install new grease retainer plates and drive new bearing outer races into the swingarm pivot.

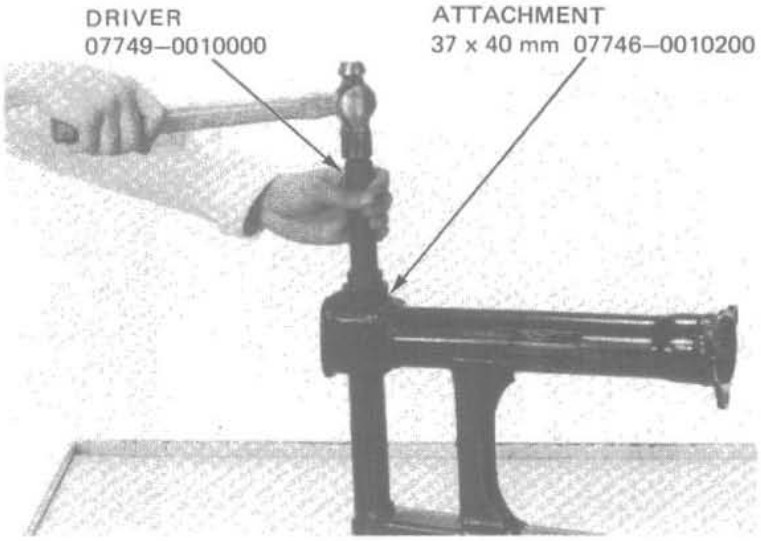

INSTALLATION

Apply grease to the pivot bearings dust seals and pivot bolt tips.
Install the bearings and dust seals.

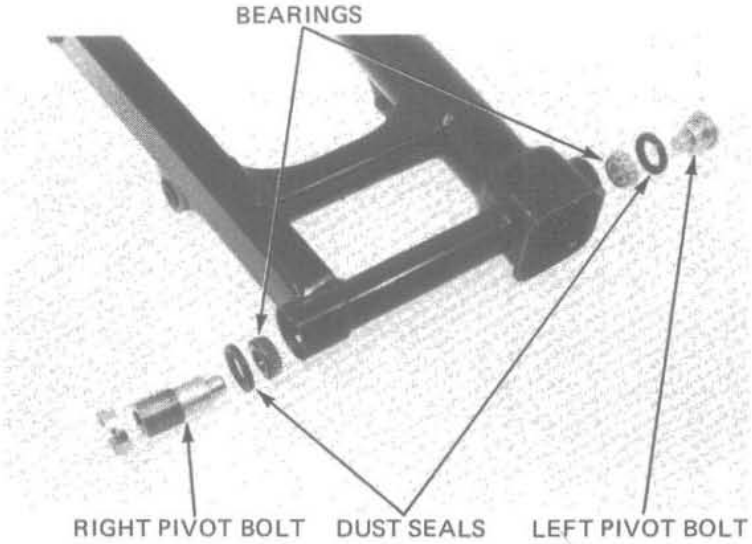

Date of Issue: October, 1982

Install the swigarm and pivot bolts.
Tighten the left pivot bolt to the specified torque.

TORQUE: 90–120 N·m (9.0–12.0 kg-m, 65–87 ft-lb)

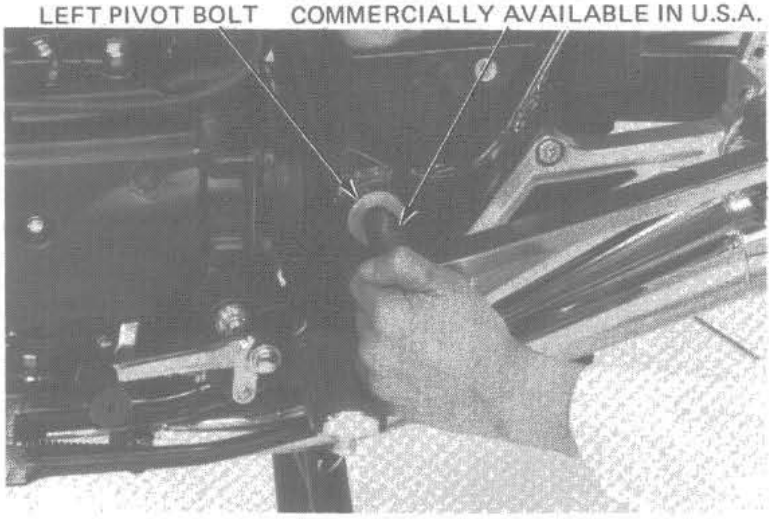

Tighten the right pivot bolt to 40 N·m (4.0 kg-m, 29 ft-lb), loosen it and retighten to the specified torque.

TORQUE: 16–20 N·m (1.6–2.0 kg-m, 12–14 ft-lb)

Move the swingarm up and down several times.
Retighten the right pivot bolt to the specified torque.

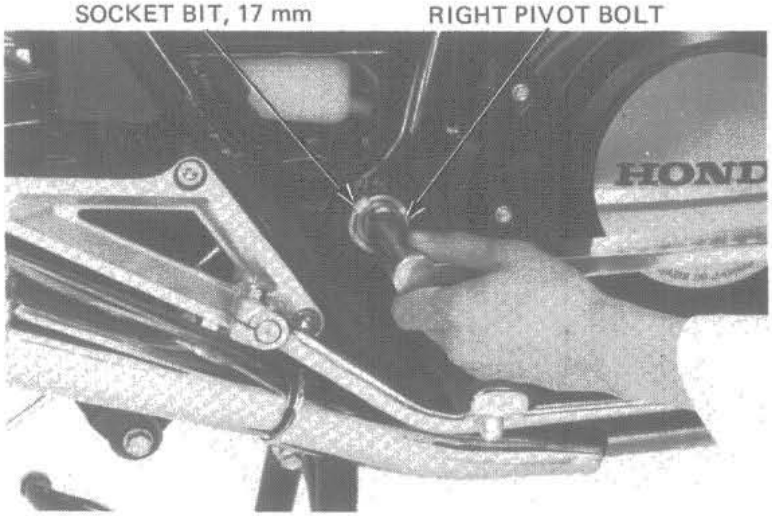

Tighten the lock nut while holding the right pivot bolt.

TORQUE: 100–130 N·m (10.0–13.0 kg-m, 72–94 ft-lb)

Install the final gear (page 14-19).
Connect the V45 SABRE shock linkage (page 17-17) and shock absorber (page 17- 20).
Install the rear wheel (page 17-7).

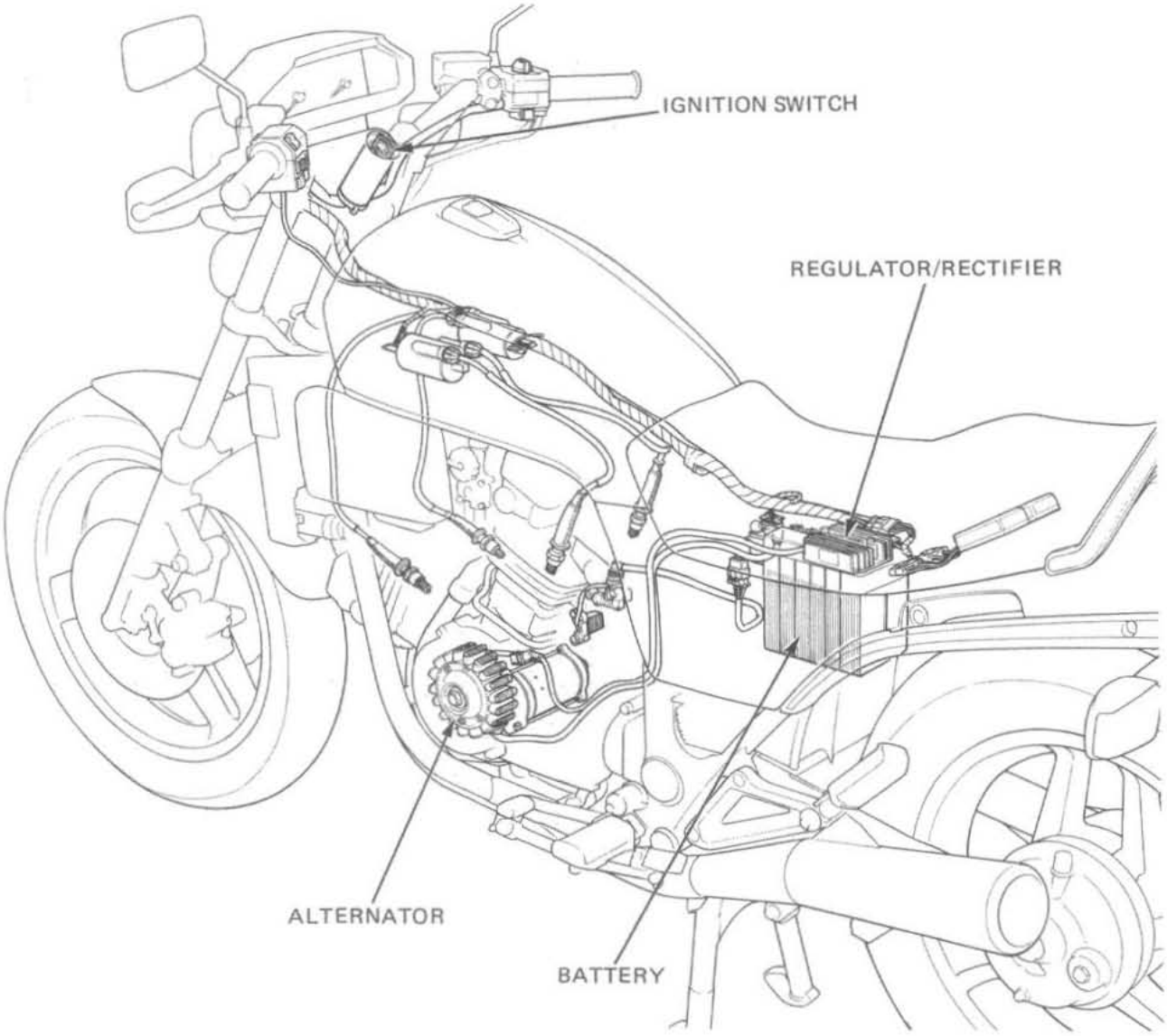

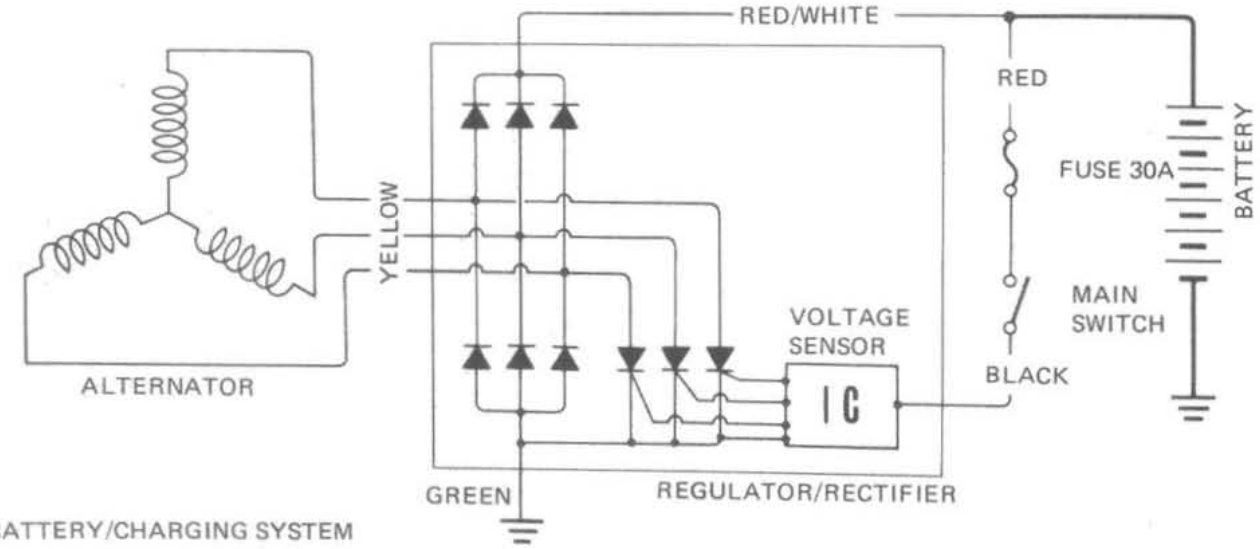

BATTERY/CHARGING SYSTEM

Date of Issue: January, 1982

18. BATTERY/CHARGING SYSTEM

SERVICE INFORMATION

GENERAL

- Battery fluid level should be checked regularly. Fill with distilled water when necessary.
- Quick charge a battery, only in an emergency. Slow-charging is preferred.
- Remove the battery from the motorcycle for charging. If the battery must be charged on the motorcycle, disconnect the battery cables.

WARNING

Do not smoke, and keep flames away from a charging battery. The gas produced by a battery will explode if flames or sparks are brought near.

- All charging system components can be tested on the motorcycle.
- Alternator removal is in Section 9.

SPECIFICATIONS

Battery	Capacity	12V 14AH	
	Specific gravity	1.280/20°C (68°F)	
	Charging rate	1.4 amperes maximum	
Alternator Capacity		1,000 rpm	5,000 rpm
		10.2A min. (No load)	25A min. (No load)
Voltage regulator		Transistorized non-adjustable regulator	

18

TROUBLESHOOTING

No power – key turned on:

1. Dead battery
   - Low fluid level
   - Low specific gravity
   - Charging system failure
2. Disconnected battery cable
3. Main fuse burned out
4. Faulty ignition switch

Low power – key turned on:

1. Weak battery
   - Low fluid level
   - Low specific gravity
   - Charging system failure
2. Loose battery connection

Low power – engine running:

1. Battery undercharged
   - Low fluid level
   - One or more dead cells
2. Charging system failure

Intermittent power:

1. Loose battery connection
2. Loose charging system connection
3. Loose starting system connection
4. Loose connection or short circuit in ignition system
5. Loose connection or short circuit in lighting system

Charging system failure:

1. Loose, broken or shorted wire or connection
2. Faulty voltage regulator/rectifier
3. Faulty alternator

Date of Issue: January, 1982

BATTERY

REMOVAL (V45 SABRE)

Remove the right side cover and seat.
Disconnect the ground cable at the battery terminal, then disconnect the positive cable.
Disconnect the battery electrolyte level sensor connector.
Loosen the battery holder plate nuts and remove the battery.

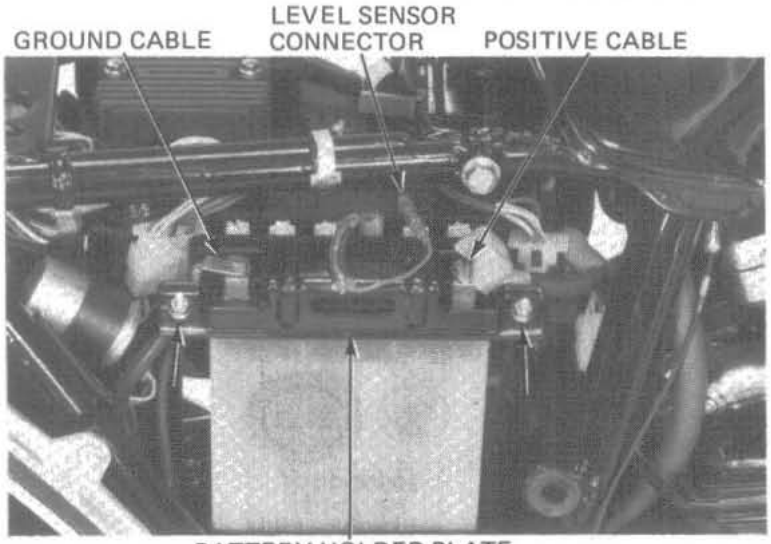

REMOVAL (V45 MAGNA)

Remove the right side cover and seat.
Disconnect the ground cable at the battery terminal, then disconnect the positive cable.
Loosen the holder bolt and pull up the battery holder.
Remove the battery.

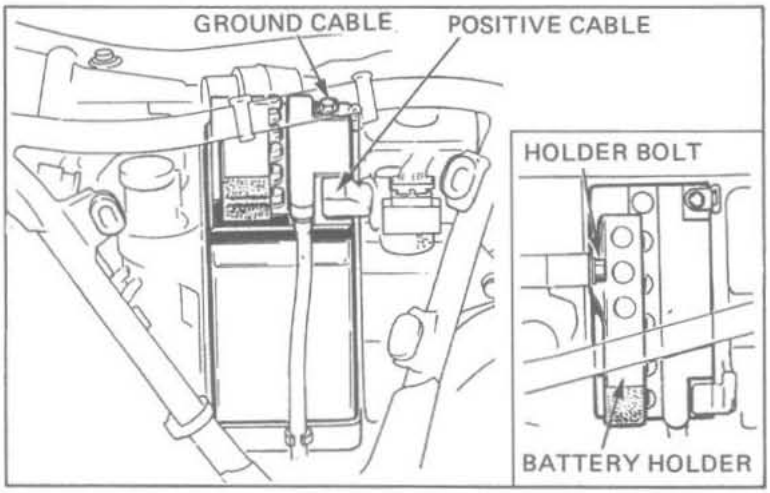

TESTING SPECIFIC GRAVITY

Test each cell with a hydrometer.

SPECIFIC GRAVITY: 1.270–1.290 (20°C, 68°F)

1.270–1.290	Fully charged
Below 1.260	Undercharged

NOTES

- The battery must be recharged if the specific gravity is below 1.230.
- The specific gravity varies with the temperature as shown in the accompanying table.
- Replace the battery if sulfation is evident or if the space below the cell plates is filled with sediment.

WARNING

The battery contains sulfuric acid. Avoid contact with skin, eyes, or clothing.
Antidote: Flush with water and get prompt medical attention.

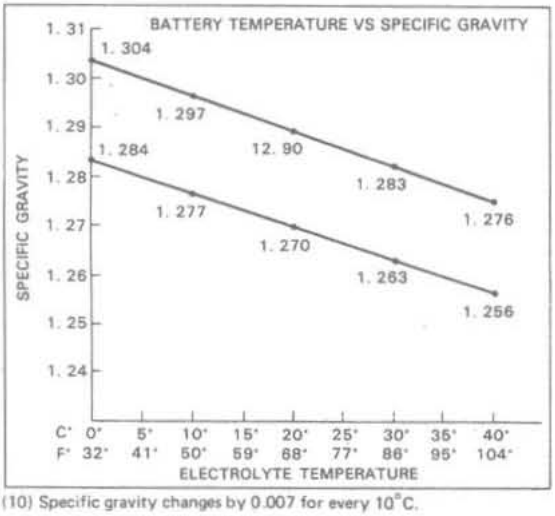

(10) Specific gravity changes by 0.007 for every 10°C.

CHARGING

Remove the battery cell caps.
Fill the battery cells with distilled water to the upper level line, if necessary.
Connect the charger positive (+) cable to the battery positive (+) terminal.
Connect the charger negative (–) cable to the battery negative (–) terminal.

Charging current: 1.4 amperes max.

Charge the battery until specific gravity is 1.270–1.290 at 20°C (68°F).

WARNING

- *Before charging a battery, remove the cap from each cell.*
- *Keep flames and sparks away from a charging battery.*
- *Turn power ON/OFF at the charger, not at the battery terminals to prevent sparks.*
- *Discontinue charging if the electrolyte temperature exceeds 45°C (113°F).*

CAUTION:

- *Quick-charging should only be done in an emergency; slow-charging is preferred.*
- *Route the breather tube as shown on the battery caution label.*

After installing the battery, coat the terminals with clean grease.

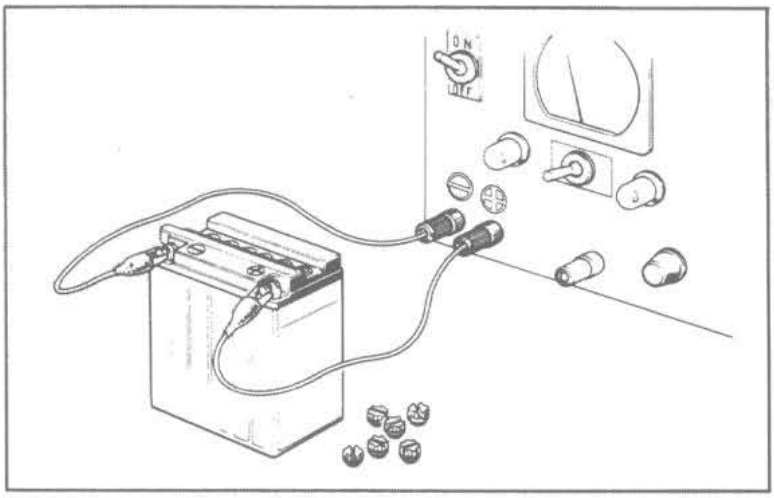

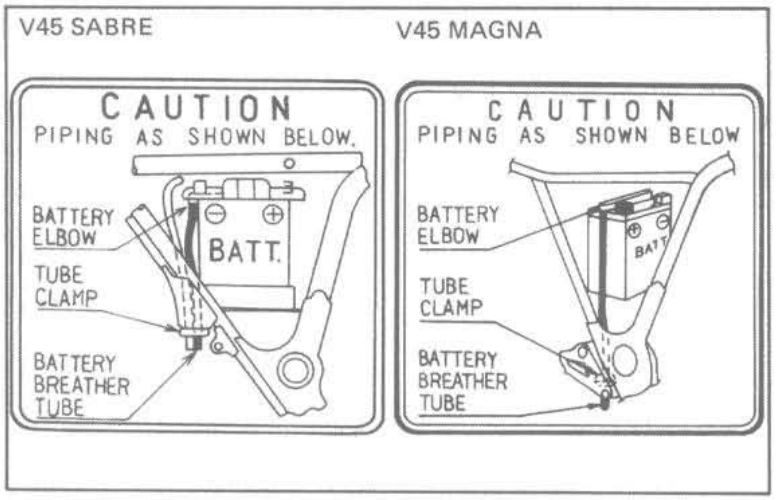

CHARGING SYSTEM

CURRENT TEST

NOTE

Be sure the battery is in good condition before performing this test.

Warm up the engine.
Remove the frame right side cover and seat.
Disconnect the black wire at the regulator/rectifier coupler.
Disconnect the headlight.
Disconnect the battery positive cable at the battery terminal and connect an ammeter between the battery cable and terminal.
Allow engine to idle.

Increase engine speed slowly.
Charging amperage should be a minimum of 10.2 at 1,000 rpm and should be a minimum of 25 amperes at 5,000 rpm.
Check the stator (page 18-5) and then the regulator/rectifier (page 18-5), if the charging specifications are not met.

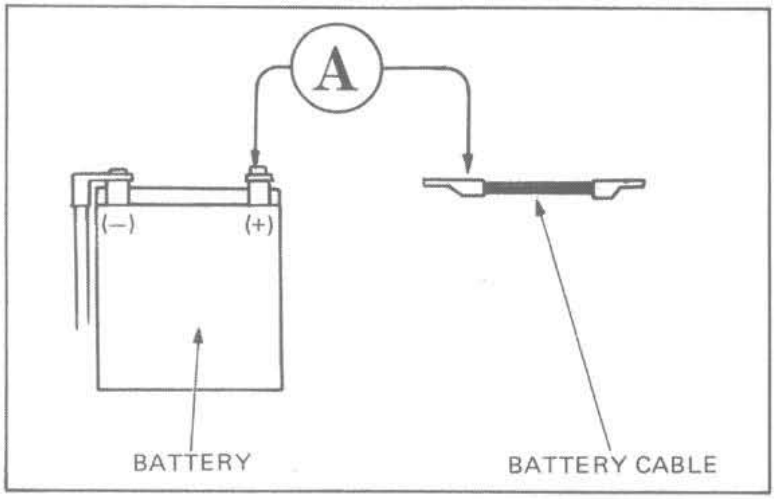

Date of Issue: May, 1982

STATOR CONTINUITY TEST

Remove the seat.
Disconnect the alternator and regulator/rectifier coupler.
Check for continuity between the leads, and between the leads and ground.
Replace the stator if there is no continuity between the leads, or if there is continuity between the leads and ground.

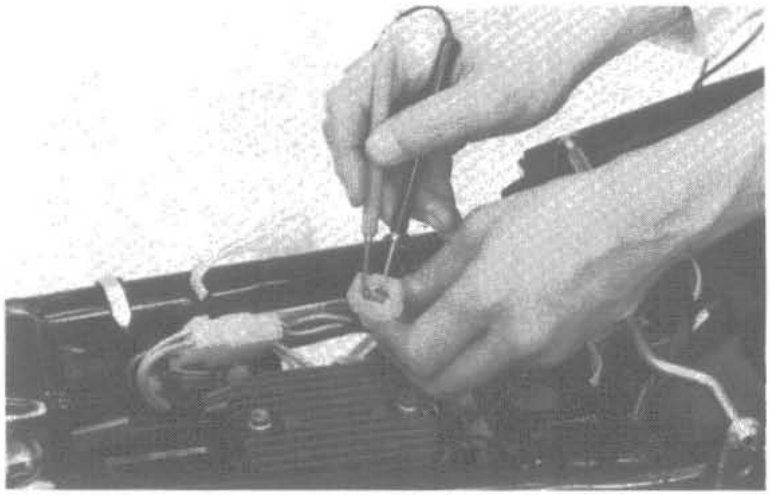

VOLTAGE REGULATOR/RECTIFIER TEST

Remove the seat.
Disconnect the regulator/rectifier couplers.

Check for continuity between the leads with an ohmmeter.

NOTE

> The test results shown are for a positive ground ohmmeter and the opposite results will be obtained when a negative ground ohmmeter is used.

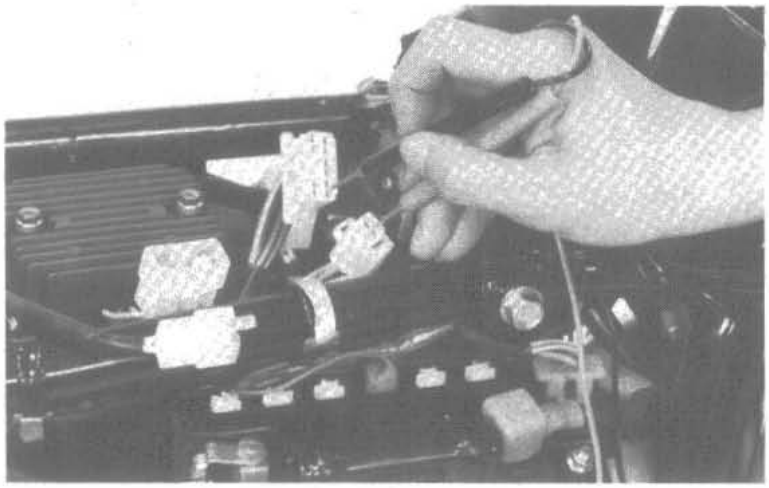

NORMAL DIRECTION: CONTINUITY

	⊕ probe	⊖ probe
I	YELLOW	GREEN
II	RED/WHITE	YELLOW

REVERSE DIRECTION: NO CONTINUITY

	⊕ probe	⊖ probe
I	GREEN	YELLOW
II	YELLOW	RED/WHITE

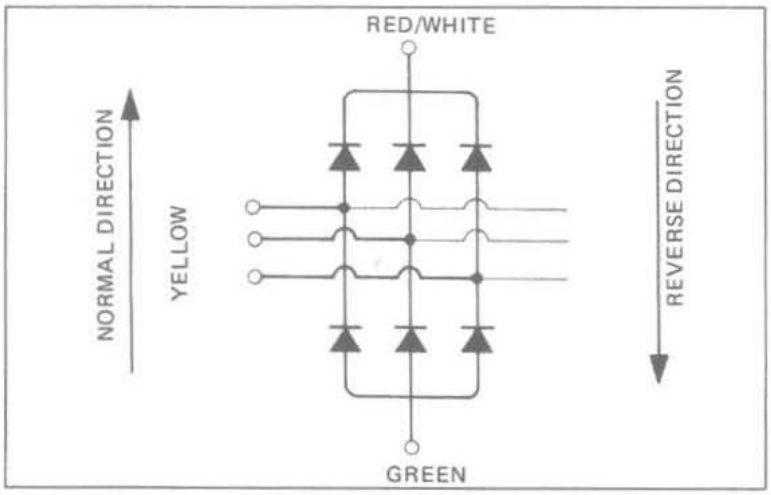

VOLTAGE REGULATOR PERFORMANCE TEST

Connect a voltmeter across the battery.
Check regulator performance with the engine running. The regulator must divert current to ground when battery voltage reaches 14.0 ~ 15.0 V.

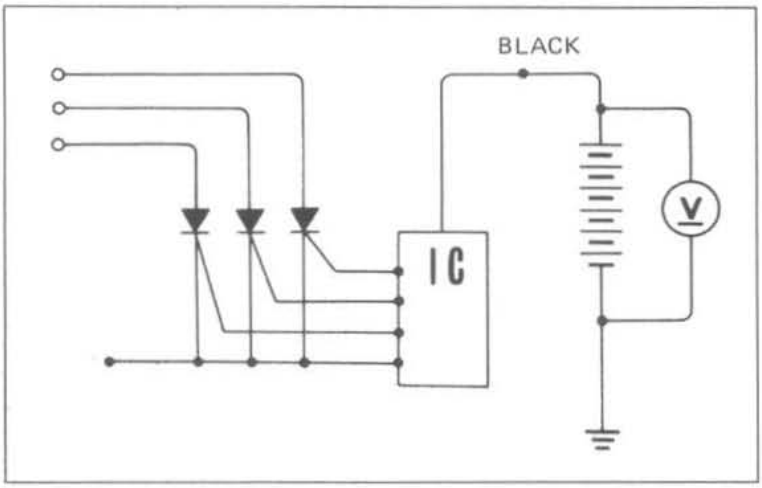

Date of Issue: May, 1982

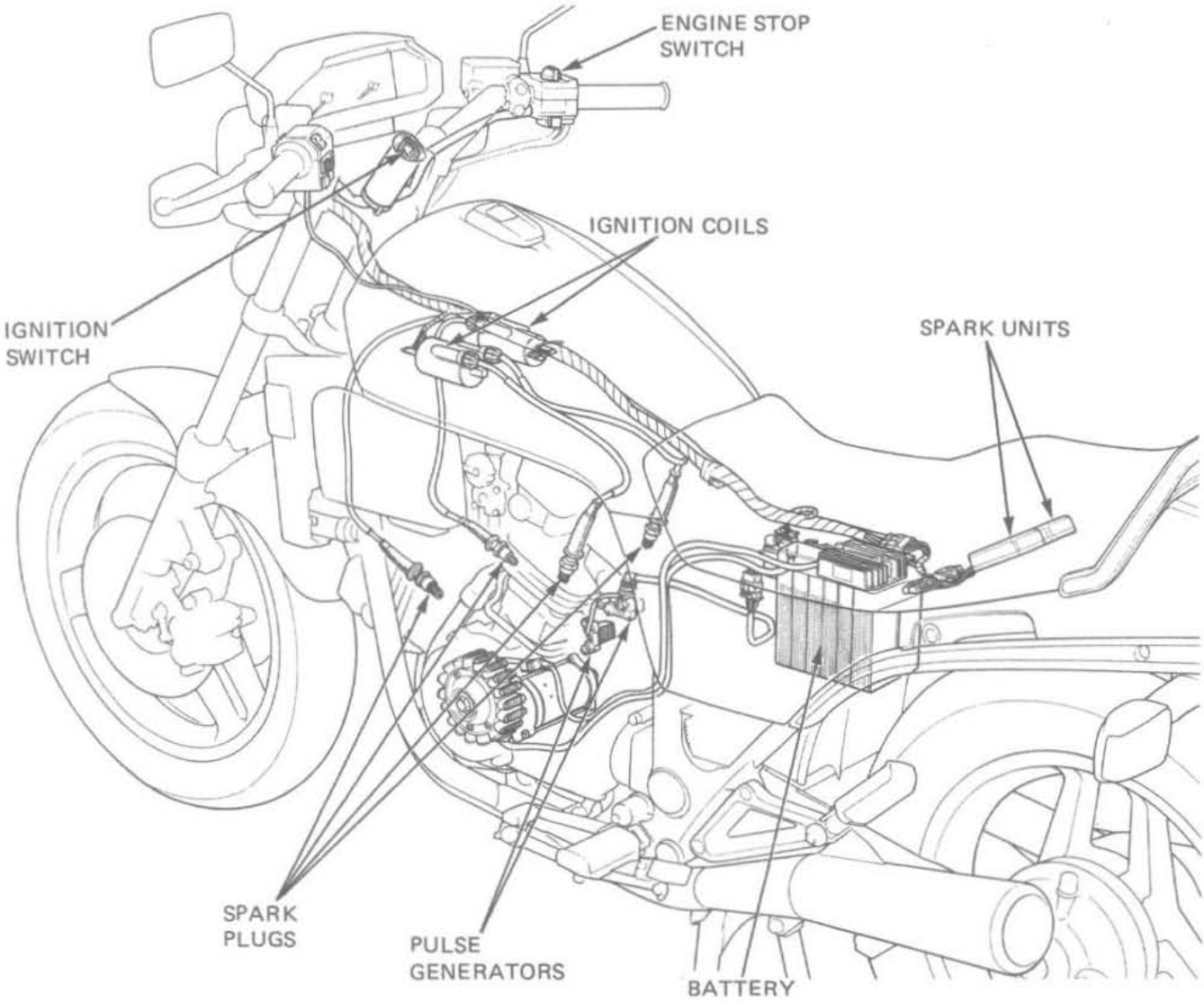

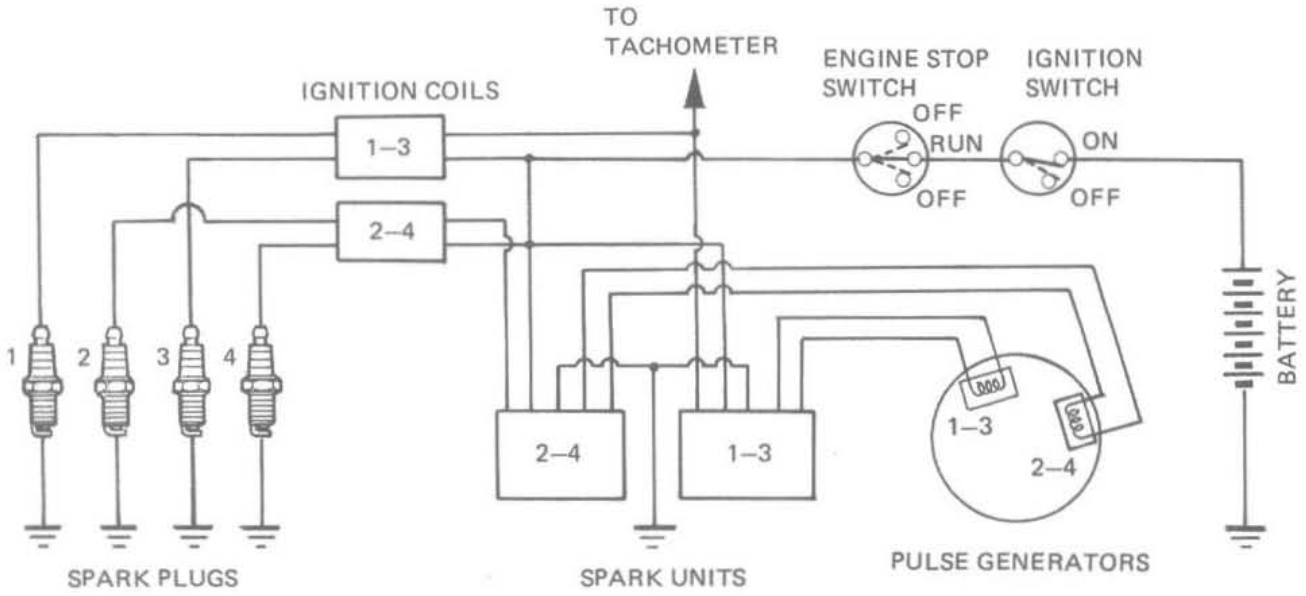

Date of Issue: May, 1982

19. IGNITION SYSTEM

SERVICE INFORMATION

GENERAL

- A TRANSISTORIZED IGNITION SYSTEM is used and no adjustments can be made.

SPECIFICATIONS

		ND	NGK
Spark plug	Standard	X24EPR-U9	DPR8EA-9
	For cold climate Below 5°C (41°F)	X22EPR-U9	DPR7EA-9
	For extended high speed driving	X27EPR-U9	DPR9EA-9
Spark plug gap		0.8–0.9 mm (0.031–0.035 in)	
Ignition timing		At idle 10°BTDC	
		Full advance 37°BTDC/3,300 rpm	
Ignition coil		3-point spark test 8 mm (5/16 in) minimum	

TROUBLESHOOTING

The ignition system has two sub-systems; one for the No. 1 and No. 3 cylinders and one for the No. 2 and No. 4 cylinders. Determine which sub-system is faulty, then proceed to the detailed tests below.

Engine cranks but will not start
- Engine stop switch OFF
- No spark at plugs
- Faulty transistorized spark unit
- Faulty pulse generator

No spark at plug
- Engine stop swtich OFF
- Poorly connected, broken or shorted wires
  - Between ignition switch and engine stop switch
  - Between spark unit and engine stop switch
  - Between spark unit and ignition coil
  - Between ignition coil and plug
  - Between spark unit and pulse generator
- Faulty ignition coil
- Faulty ignition switch
- Faulty spark unit
- Faulty pulse generator

Engine starts but runs poorly
- Ignition primary circuit
  - Faulty ignition coil
  - Loose or bare wire
  - Intermittent short circuit
- Secondary circuit
  - Faulty plug
  - Faulty high tension wire

Timing advance incorrect
- Faulty pulse generator
- Faulty spark unit

Date of Issue: May, 1982

IGNITION COIL

REMOVAL

Remove the seat, fuel tank and disconnect the ignition coil wire leads.
Remove the coils by removing the attaching bolts.

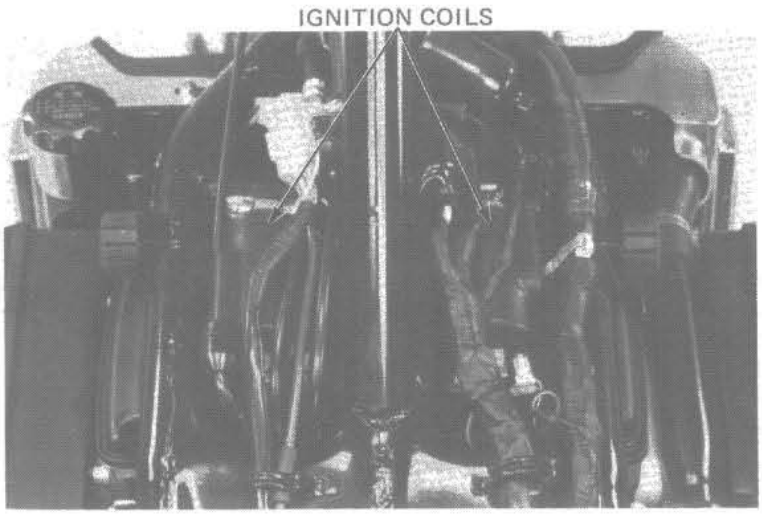

CONTINUITY TEST

Measure the primary coil resistance.

RESISTANCE: 2.8 ohms

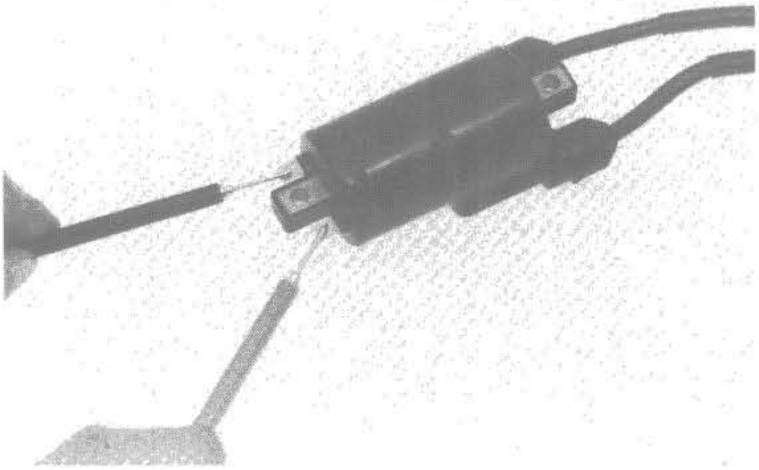

Measure the secondary coil resistance with the spark plug caps in place.

RESISTANCE: 21–28 k ohms

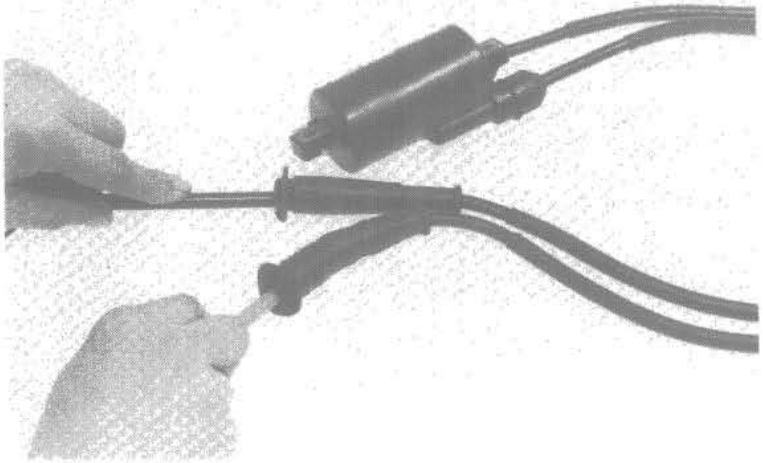

Remove the spark plug caps and measure the secondary coil resistance.

RESISTANCE 13.6–15.5 ohms

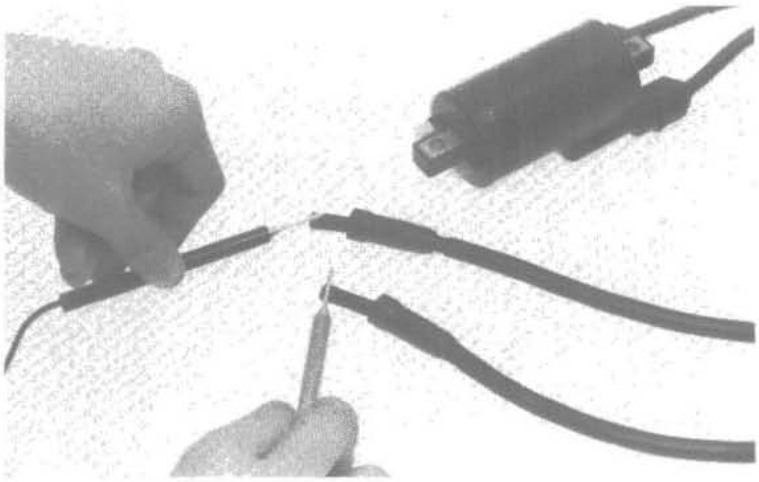

PERFORMANCE TEST

Perform a 3-point spark test with a coil tester.

SERVICE LIMIT: 8 mm (5/16 in) min.

NOTE:

Follow the coil tester manufacturer's instructions.

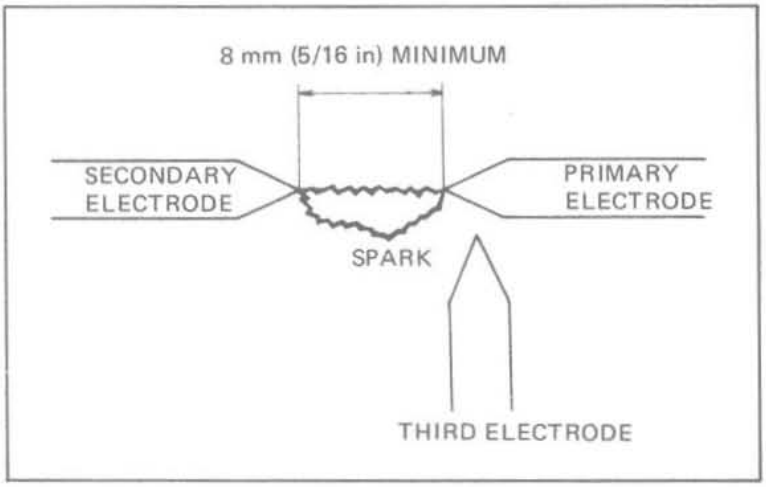

TRANSISTORIZED IGNITION SYSTEM

PULSE GENERATOR TEST

Remove the right side cover.
Disconnect the pulse generator coupler and measure the coil resistance.

RESISTANCE: Approximatery 480 ohms

Between white and yellow leads (1, 3 cylinders)
Between white and blue leads (2, 4 cylinders)

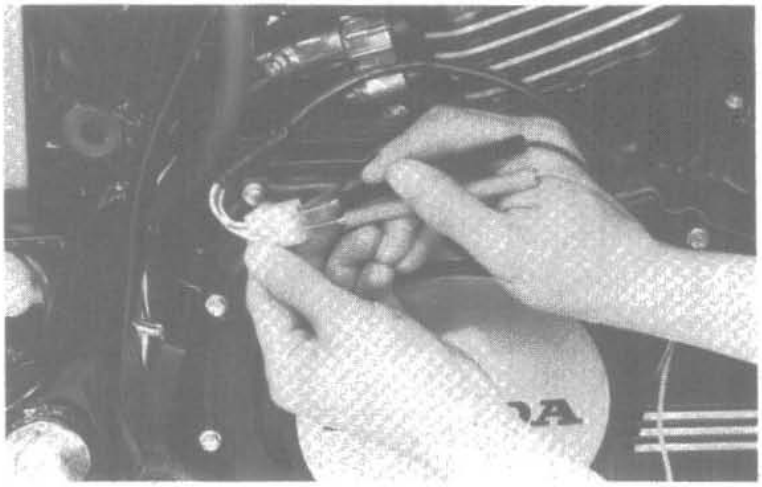

Date of Issue: May, 1982

PULSE GENERATOR REPLACEMENT

Remove the clutch cover (page 7-11).
Remove the pulse generator mounting bolts, and pulse generators.
Install new pulse generators.
Install the clutch cover (page 7-20).
Recheck the ignition timing (page 3-10).

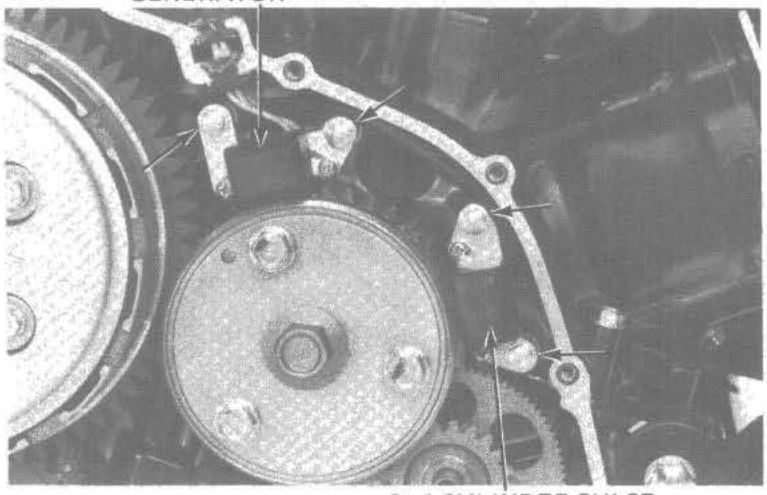

SPARK UNIT

If the pulse generators, ignition coils and wiring are good, and the ignition timing is not within specification; replace the spark units with new ones and recheck the ignition timing.

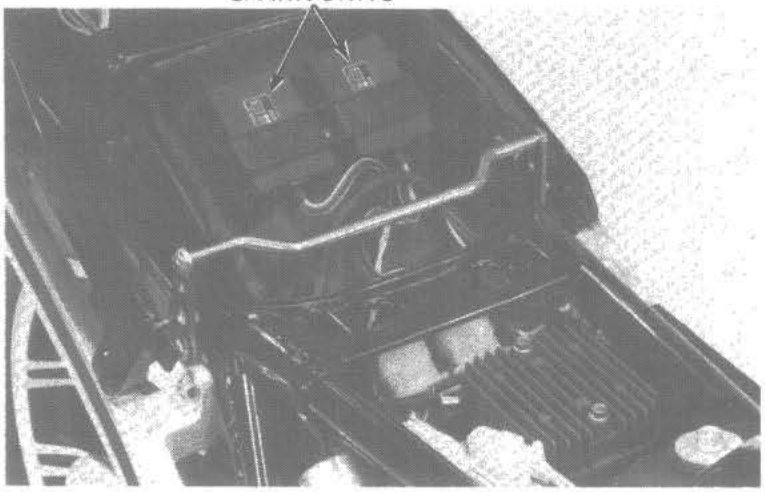

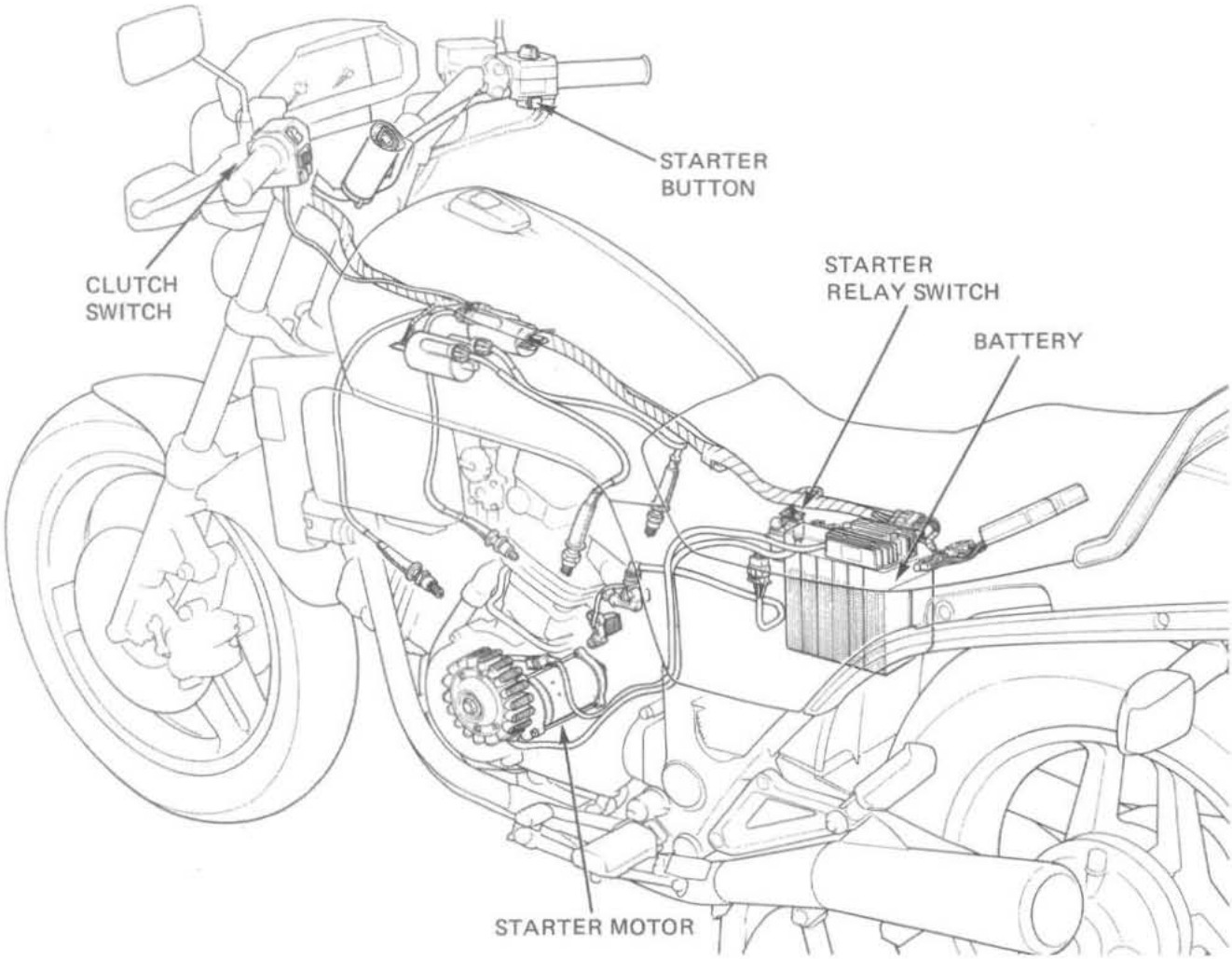

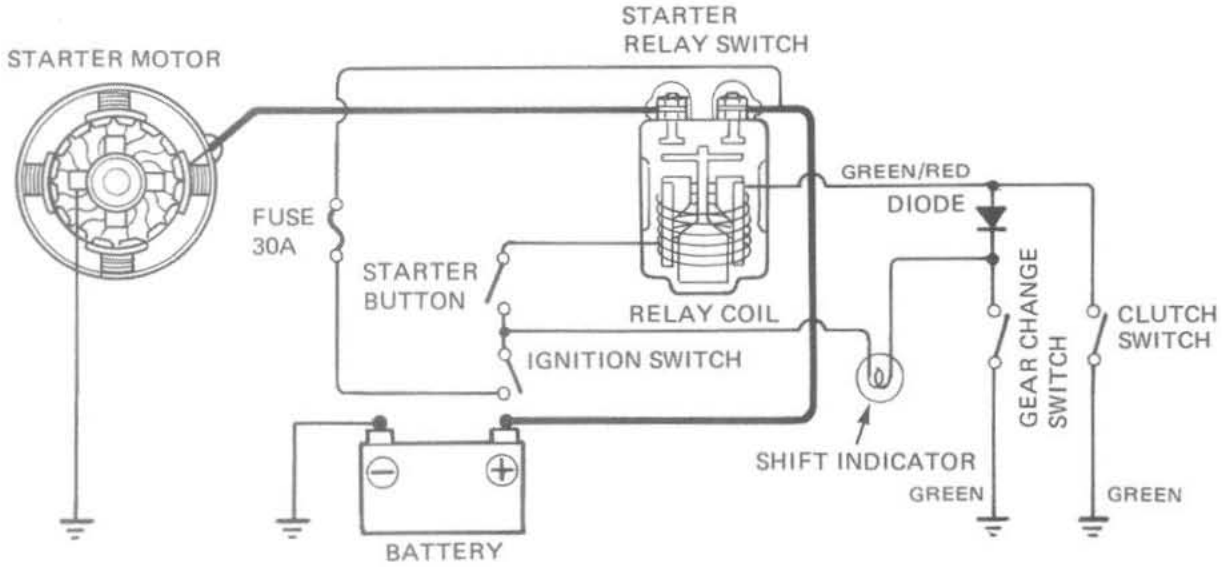

Date of Issue: May, 1982

20. ELECTRIC STARTER

SERVICE INFORMATION

GENERAL

- The starter motor can be removed with the engine in the frame.

SPECIFICATIONS

		STANDARD	SERVICE LIMIT
Starter motor	Brush spring tension	680–920 g (24.0–32.5 oz)	545 g (19.2 oz)
	Brush length	12.0–13.0 mm (0.47–0.51 in)	6.5 mm (0.26 in)

TROUBLESHOOTING

Starter motor will not turn:
- Battery discharged
- Faulty ignition switch
- Faulty starter switch
- Faulty gear change switch
- Faulty starter relay switch
- Loose or disconnected wire or cable
- Clutch diode open

Starter motor turns engine slowly
- Low specific gravity
- Excessive resistance in circuit
- Binding in starter motor

Starter motor turns, but engine does not turn:
- Faulty starter clutch
- Faulty starter motor gears
- Faulty starter motor or idle gear

Starter motor and engine turns, but engine does not start
- Faulty ignition system
- Engine problems

STARTER MOTOR

REMOVAL

WARNING

With the ignition switch OFF, remove the negative cable at the battery before servicing the starter motor.

Disconnect the starter motor cable at the motor. Remove the starter motor mounting bolts, and starter motor.

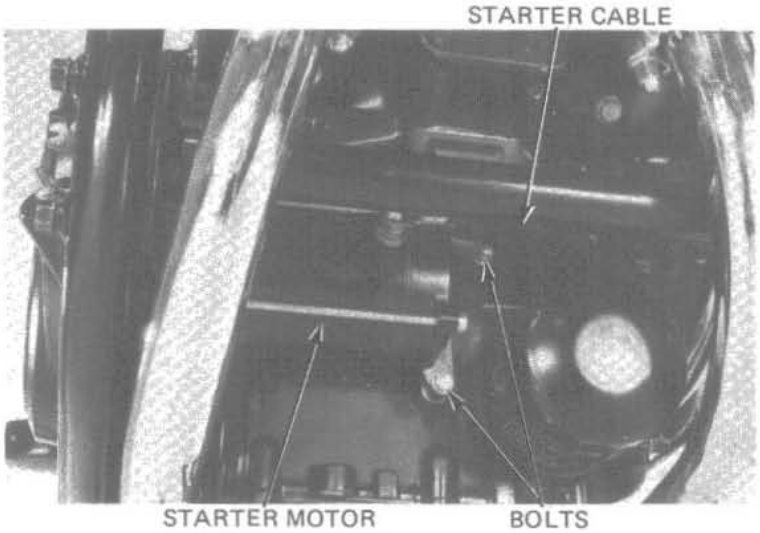

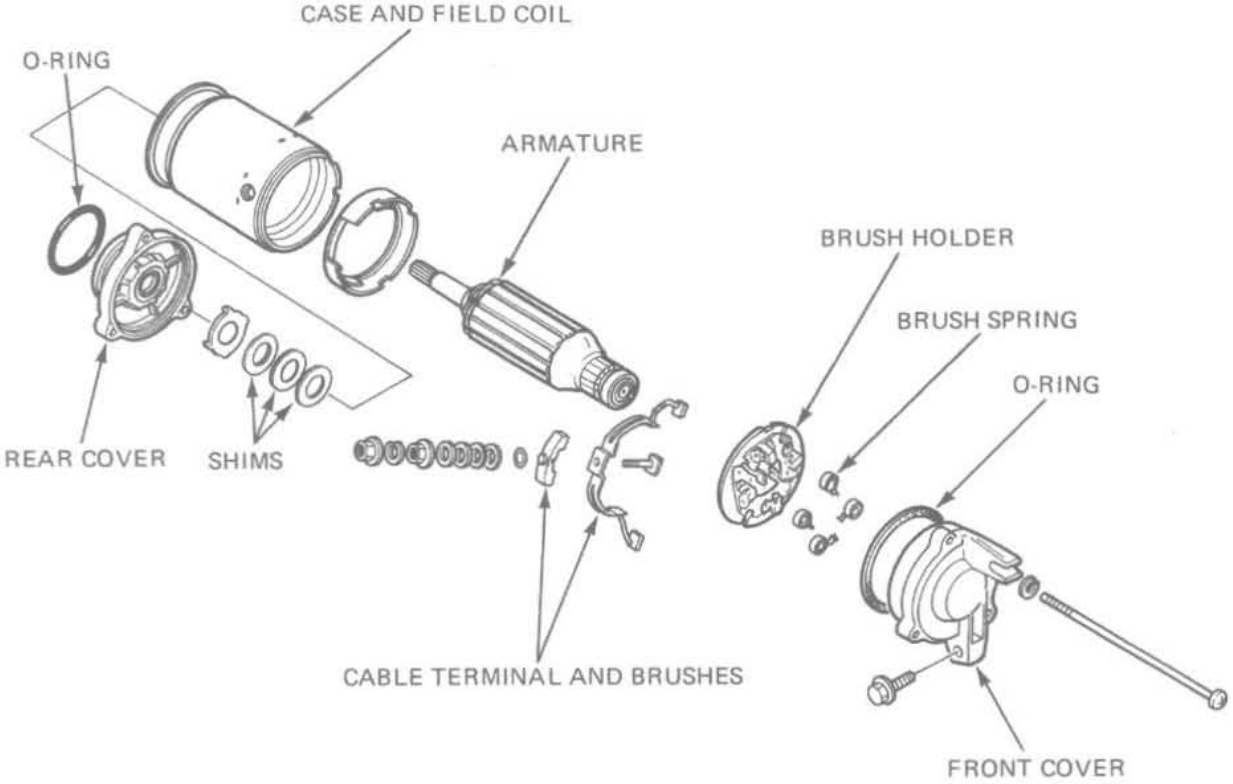

Date of Issue: May, 1982

BRUSH INSPECTION

Remove the starter motor case screws.
Inspect the brushes and measure the brush length.
Measure brush spring tension with a spring scale.

SERVICE LIMITS:

Brush length:	**6.5 mm (0.26 in)**
Brush spring tension:	**545 g (19.2 oz)**

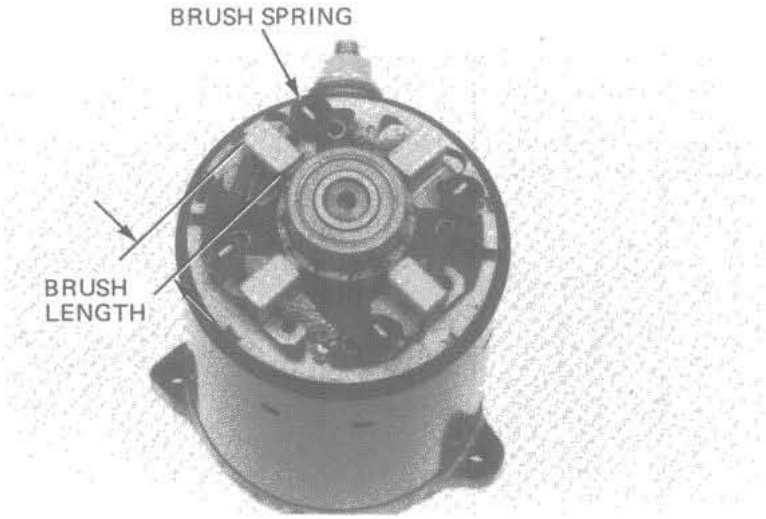

COMMUTATOR INSPECTION

Remove the starter motor case.

NOTE:

> Record the location and number of thrust washers.

Inspect the commutator bars for discoloration.
Bars discolored in pairs indicate grounded armature coils.

NOTE:

> Do not use emery or sand paper on the commutator.

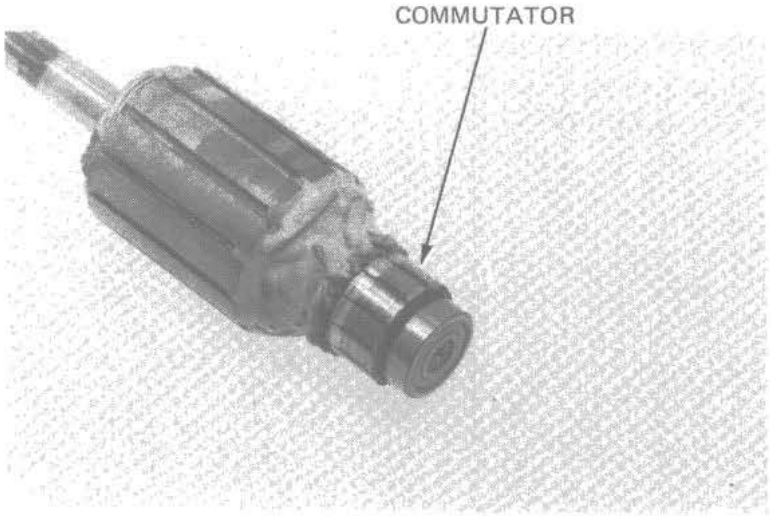

Check for continuity between pairs of commutator bars.
Also, make a resistance check between individual commutator bars and the armature shaft.
There should be no continuity.

COMMUTATOR BAR PAIRS
CONTINUITY: NORMAL

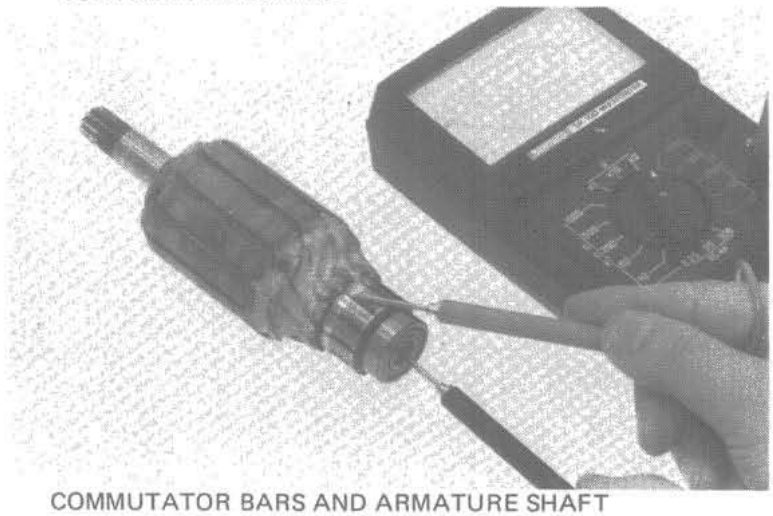

COMMUTATOR BARS AND ARMATURE SHAFT
NON CONTINUITY: NORMAL

FIELD COIL INSPECTION

Check for continuity from the cable terminal to the motor case and from the cable terminal to the brush wire.
Replace the starter motor if the field coil is not continuous or if it is shorted to the motor case.

CABLE TERMINAL-MOTOR CASE
NO CONTINUITY: NORMAL

CABLE TERMINAL-BRUSH WIRE (BLACK)
CONTINUITY: NORMAL

ASSEMBLY/INSTALLATION

Assemble the starter motor.
Align the case notch with the brush holder pin.

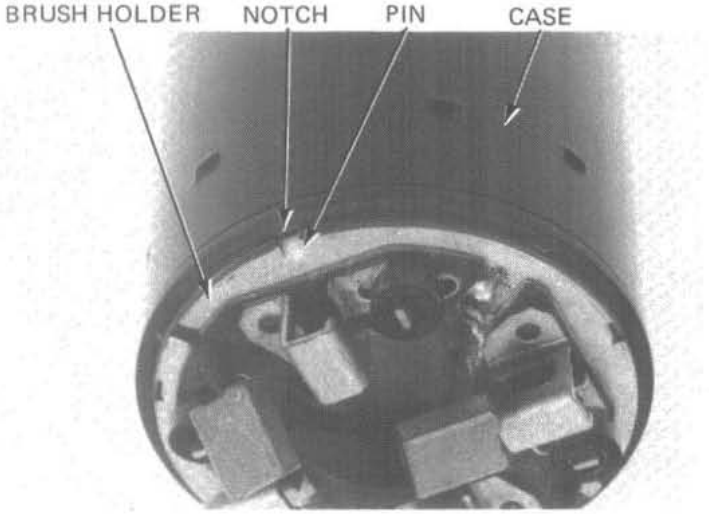

Install the rear cover aligning its slot with the brush holder pin.

Install the starter motor in the reverse order of removal.

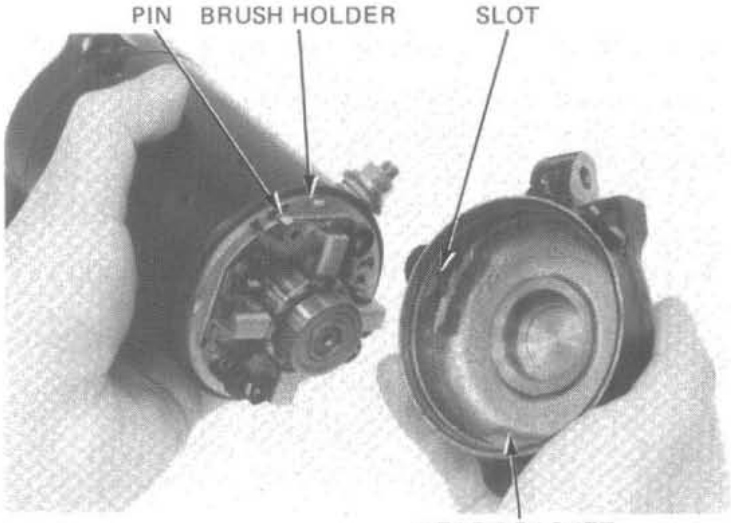

Date of Issue: January, 1982

STARTER RELAY SWITCH

INSPECTION

Depress the starter switch button with the ignition ON.
The coil is normal if the starter relay switch clicks.

Connect an ohmmeter to the starter relay switch terminals.
Connect a 12 V battery to the switch cable terminals.
The switch is normal if there is continuity.

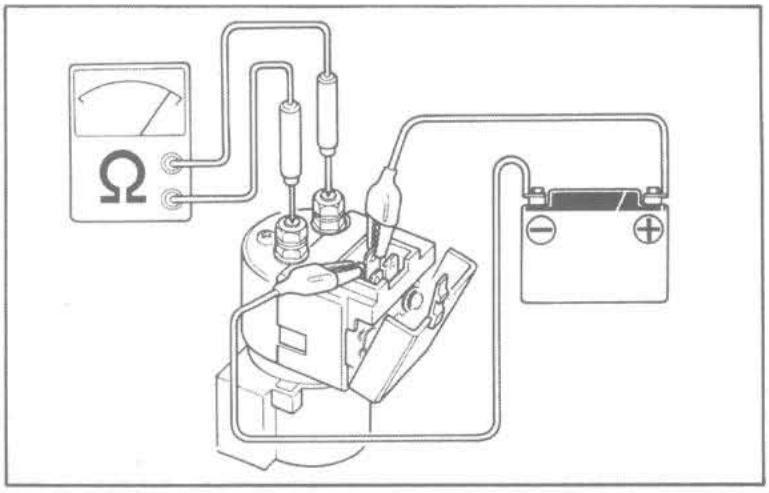

CLUTCH DIODE

REMOVAL

Remove the fuel tank.
Remove the clutch diode from the wire harness.

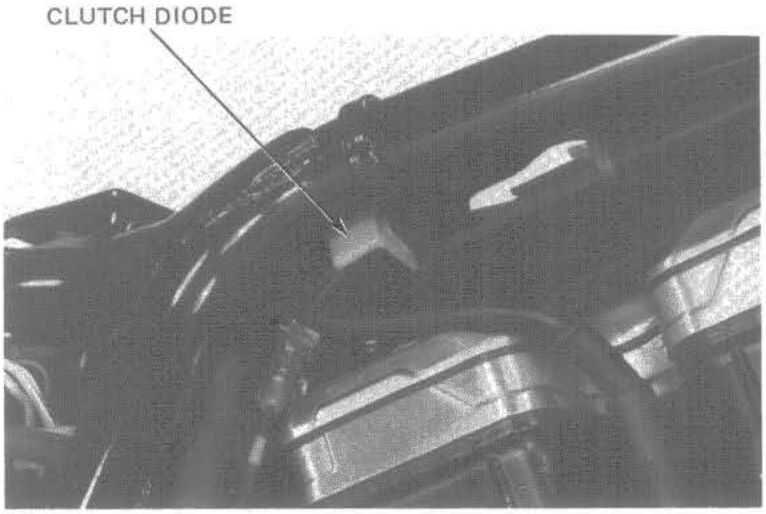

NORMAL DIRECTION: CONTINUITY
REVERSE DIRECTION: NO CONTINUITY

INSPECTION

Check for continuity with an ohmmeter.

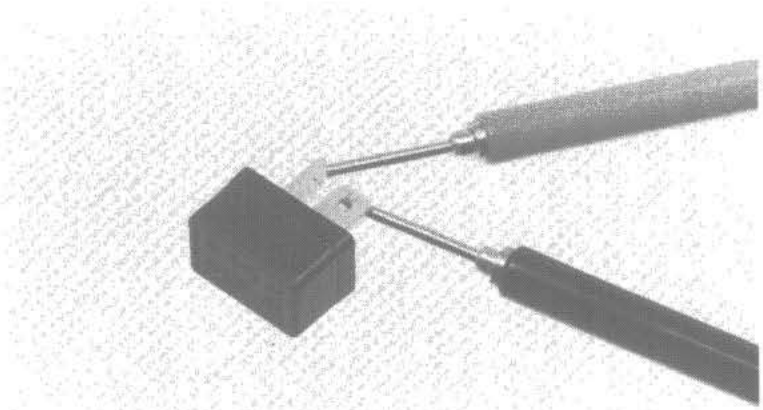

21. SWITCHES

SERVICE INFORMATION

GENERAL

- Some wires have different colored bands around them near the connector. These are connected to other wires which correspond with the band color.
- All plastic plugs have locking tabs that must be released before disconnecting, and must be aligned when reconnecting.
- The following color codes used are indicated throughout this section and on the wiring diagram.

B = Blue	G = Green	LG = Light Green	R = Red
Bk = Black	Gr = Grey	O = Orange	W = White
Br = Brown	LB = Light Blue	P = Pink	Y = Yellow

- To isolate an electrical failure, check the continuity of the electrical path through the part. A continuity check can usually be made without removing the part from the motorcycle. Simply disconnect the wires and connect a continuity tester or volt-ohmmeter to the terminals or connections.
- A continuity tester is useful when checking to find out whether or not there is an electrical connection between the two points. An ohmmeter is needed to measure the resistance of a circuit, such as when there is a specific coil resistance involved, or when checking for high resistance caused by corroded connections.

OIL PRESSURE SWITCH

Drain the engine oil.
Disconnect the oil pressure switch lead and remove the switch.

Check for continuity while applying pressure to the switch.

Replace the switch if necessary.

Apply a liquid sealant to the switch threads before installing the switch.

Screw the switch in the crankcase and leave two threads from the bottom. Then tighten it to the specified torque.

TORQUE: 15–20 N·m (1.5–2.0 kg-m, 11–14 ft-lb)

NOTE:

> Do not over tighten the switch to prevent crankcase from damage.

CONTINUITY: BELOW
0.3 ± 0.1 kg/cm² (4.3 ± 1.4 psi)

OIL PRESSURE SWITCH

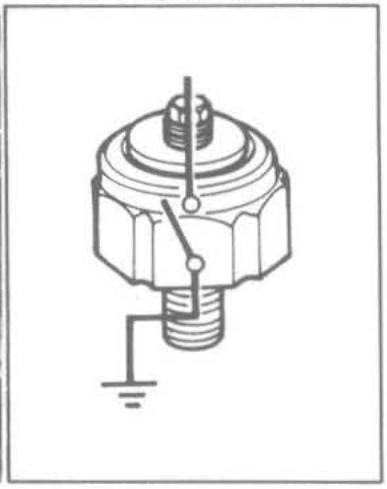

BRAKE LIGHT SWITCH

Check the rear brake light switch for continuity with the rear brake applied.

REAR BRAKE LIGHT SWITCH

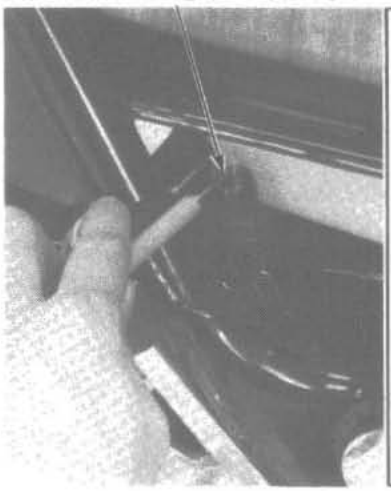

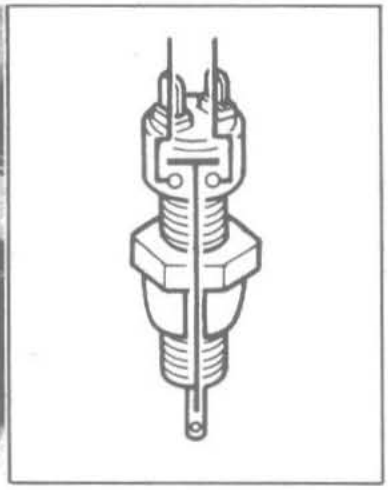

Check the front brake light switch for continuity with the front brake applied.

Replace the switches if necessary.

FRONT BRAKE LIGHT SWITCH

Date of Issue: May, 1982

GEAR CHANGE SWITCH

Remove the seat and disconnect the gear change switch connector and coupler.
Check for continuity between each terminal and ground in each gear position.

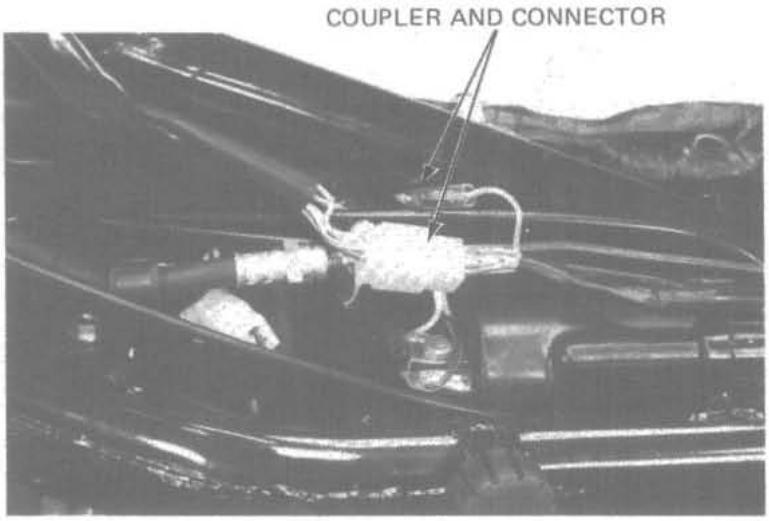

V45 SABRE

Color code / Position	Y	Lg/R	Bk/Y	W/B	R/W	Br/Y	G/O	GROUND ⏚
1st	○							○
N		○						○
2nd			○					○
3rd				○				○
4th					○			○
5th						○		○
OD							○	○

V45 MAGNA

Color code / Position	Lg/R	G/O
1st		
N	○	○
2nd		
3rd		
4th		
5th		
OD		○

REMOVAL

Remove the gear change switch cover.

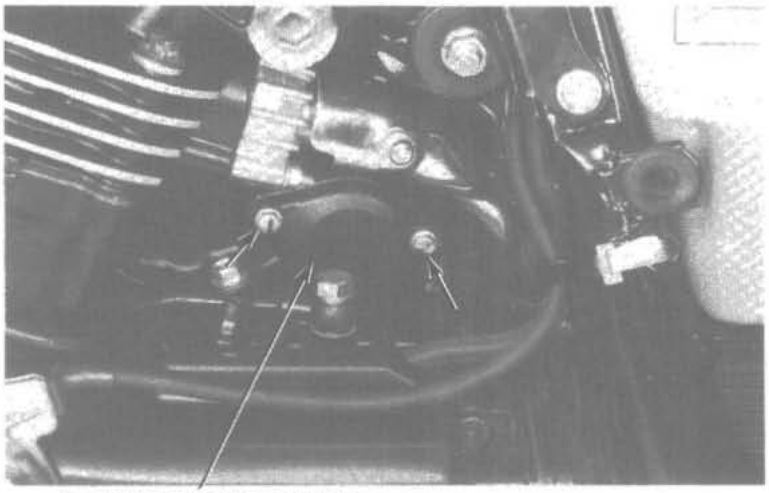

Remove the gear change switch attaching screws, and the switch.

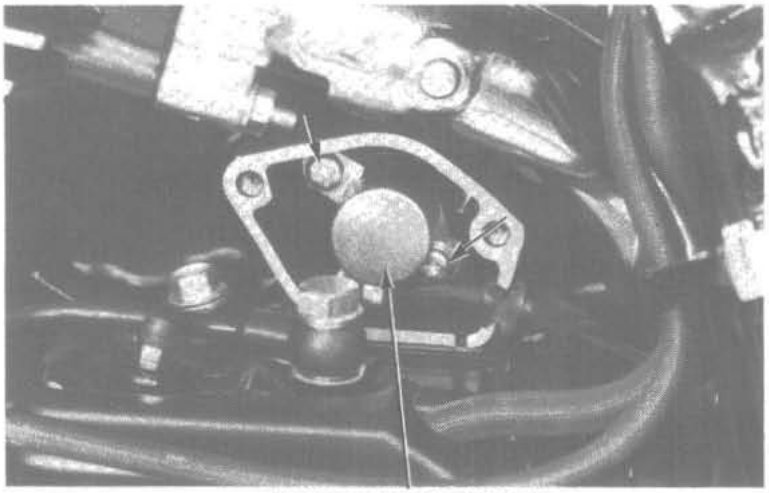

HANDLEBAR SWITCHES

The handlebar cluster switches (lights, turn signals, horn, etc.) must be replaced as assemblies.

Continuity tests for the components of the handlebar cluster switches follow:

Continuity should exist between the color coded wires in each chart.

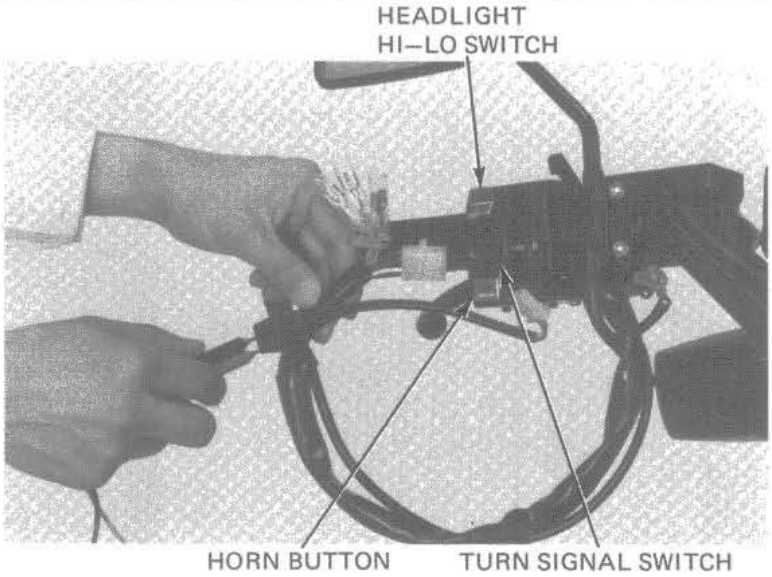

HEADLIGHT HI–LOW SWITCH

HI:	B/W to B
MIDDLE (N):	B/W to W to B
LO:	B/W to W

Headlight Hi–Low Switch

	HL	Hi	Lo
Hi	○	○	
(N)	○	○	○
Lo	○		○
Color code	B/W	B	W

TURN SIGNAL SWITCH

LEFT:	Gr to O, Br/B to LB/W
OFF:	Br/B to LB/W and O/W
RIGHT:	Gr to LB, Br/B to O/W

Turn Signal Switch

	W	L	R	TL	PR	PL
LEFT	○	○		○	○	
OFF				○	○	○
RIGHT	○		○	○		○
Color code	Gr	O	LB	Br/B	LB/W	O/W

HORN BUTTON

LG to G with button depressed
No continuity with button released

Horn Button

	Ho	E
	○	○
Color code	LG	G

CLOCK SELECT AND TIMER BUTTONS (V45 SABRE)

R/B to G with select button pushed in.
Y/Bk to G with timer button pushed in.

	Select Button		Timer Button	
	S	E	T	E
OUT				
PUSH (IN)	○	○	○	○
Color code	R/B	G	Y/Bk	G

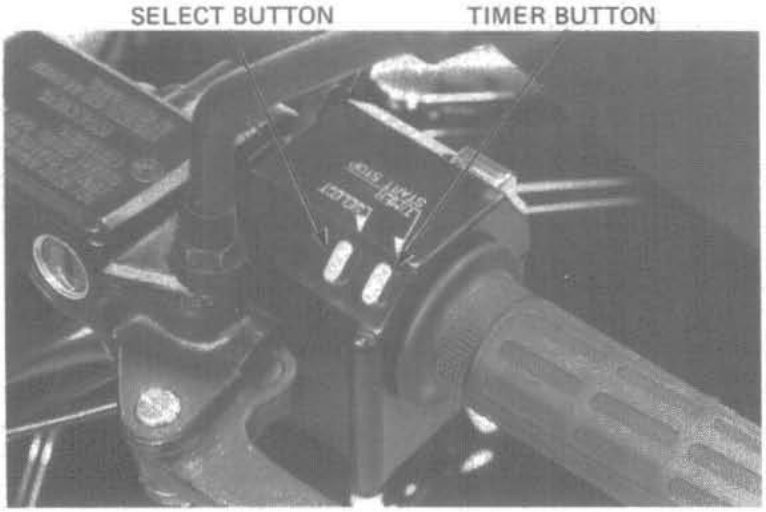

STARTER BUTTON

Bk to Y/R with button pushed in.
Bk/R to B/W with out.

Starter Button

	BAT_2	ST	BAT_5	HL
OUT			○	○
START	○	○		
Color code	Bk	Y/R	Bk/R	B/W

ENGINE STOP SWITCH

RUN: Bk to Bk/W
OFF: No continuity

Engine Stop Switch

	BAT_2	IG
OFF		
RUN	○	○
OFF		
Color code	Bk	Bk/W

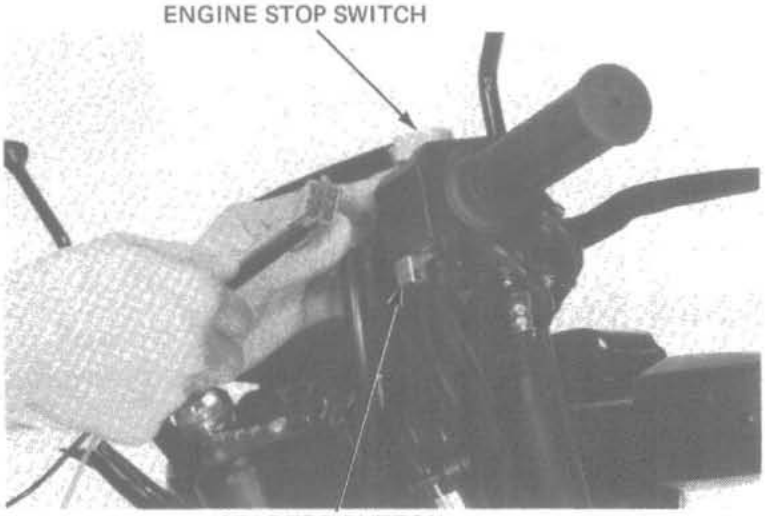

IGNITION SWITCH

Remove the fuel tank and disconnect the ignition switch coupler.

Check continuity of terminals on the ignition switch coupler in each switch position.

SWITCH POSITION

LOCK:	No continuity
OFF:	No continuity
ON:	R to Bk, Br/W to Br – continuity
PARK:	Br to R – continuity

Terminal / Position	PA	BAT_1	IG	TL_1	TL_2
P	○—○				
ON		○—○		○—○	
OFF					
LOCK					
Color code	Br	R	Bk	Br/W	Br

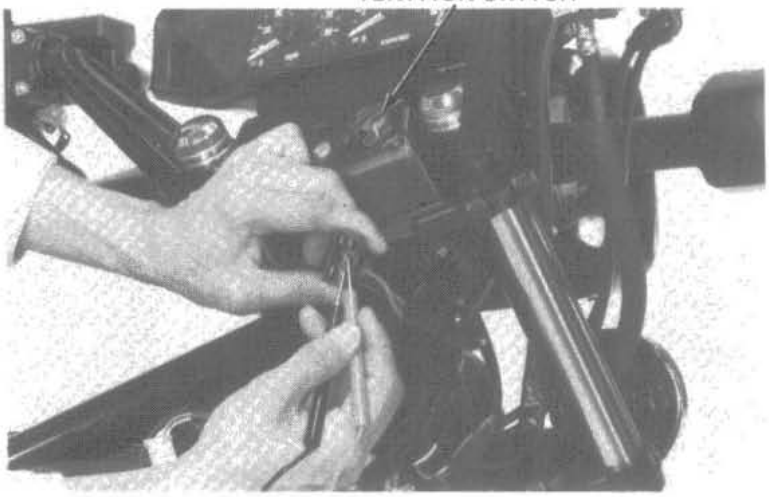

CLUTCH SWITCH

Check continuity of the clutch lever (safety) switch with the clutch released and applied.
Replace if necessary.

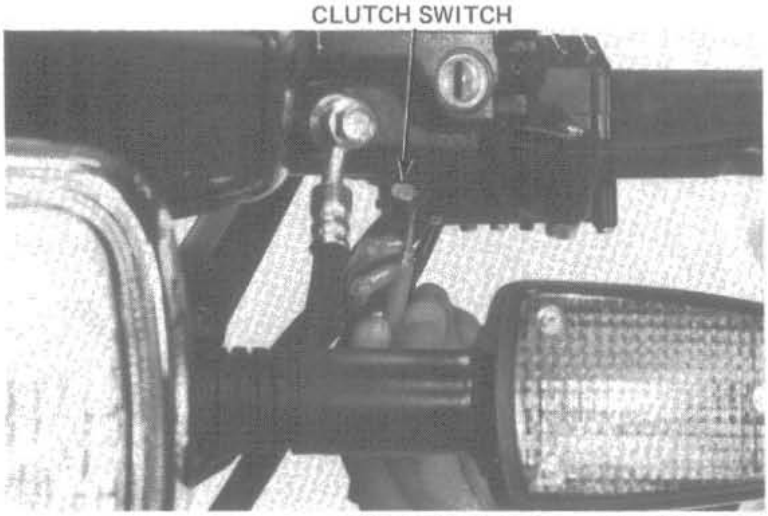

CLUTCH APPLIED : CONTINUITY
CLUTCH RELEASES: NO CONTINUITY

FUEL LEVEL SENSOR (V45 SABRE)

REMOVAL

Remove the fuel tank and drain the fuel (page 4-5).
Remove the fuel level sensor attaching nuts and fuel level sensor.

Date of Issue: January, 1982

INSPECTION

Measure the fuel level sensor resistance with full and empty float positions.

RESISTANCE: FULL 4–10 ohm
EMPTY 95–100 ohm

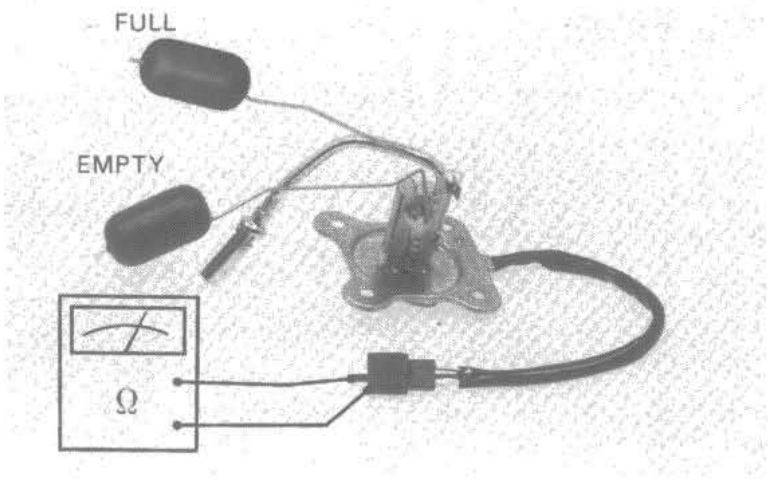

Turn the ignition switch ON.
Connect the fuel level sensor coupler to the wire harness. Move the float to full and empty and check the fuel gauge indication. If the fuel gauge does not indicate the proper level, replace it with a new one.

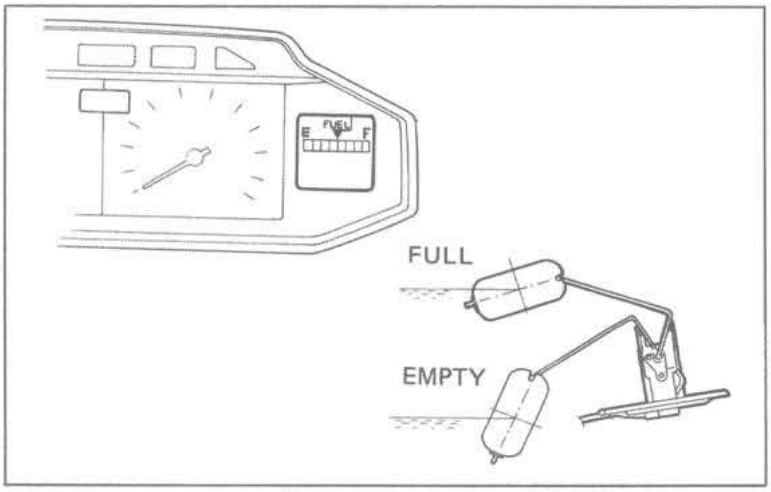

Move the float to the empty position and check that the warning unit on the instrument panel displays the fuel symbol. If the fuel symbol is not displayed, replace the warning unit.

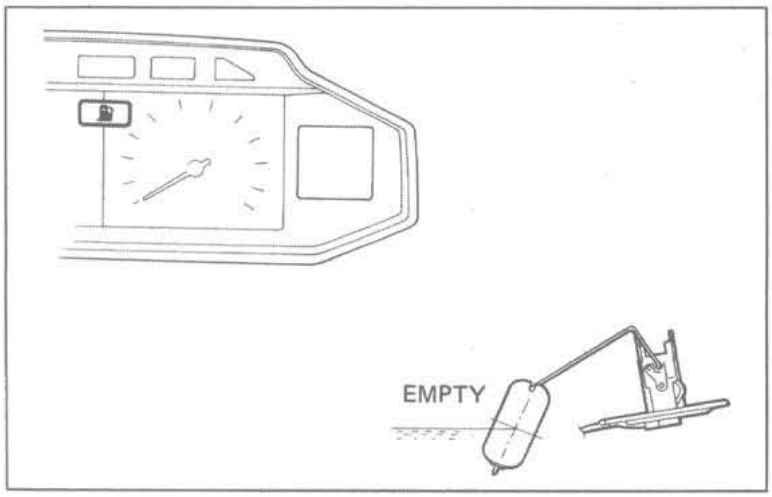

LOW FUEL WARNING LIGHT (V45 MAGNA)

Place the motorcycle on its center stand.

Check that the low fuel warning light comes on within 60 seconds after the ignition switch has been turned ON with the amount of fuel in the fuel tank below 3.5 liters (0.93 US gal).

NOTE

> The light will not go on immediately after the ignition switch is turned ON.

If the light does not go on within 60 seconds, check for a blown fuse or bulb, loose connector or open circuit in the wire harness. Replace the sensor if all of these parameters check out good.

Check that the low fuel warning light will not light when the ignition switch is turned ON with the amount of fuel in the fuel tank above 6.5 liters (1.72 US gal).

If the warning light goes on, check for a short circuit in the wire harness or coupler.

Replace the fuel reserve sensor if shorts are found.

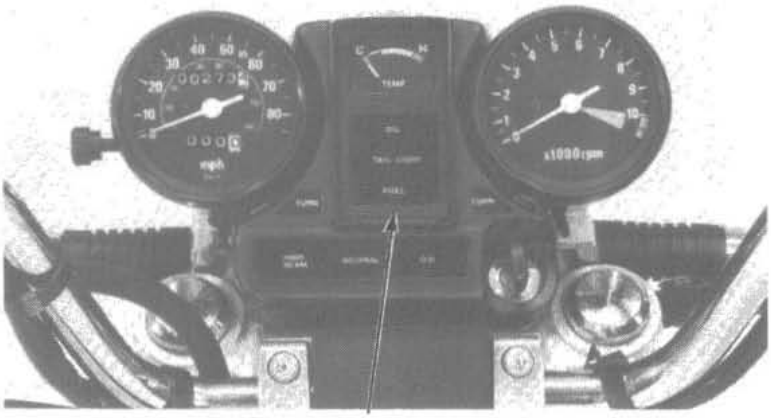

LOW FUEL WARNING LIGHT

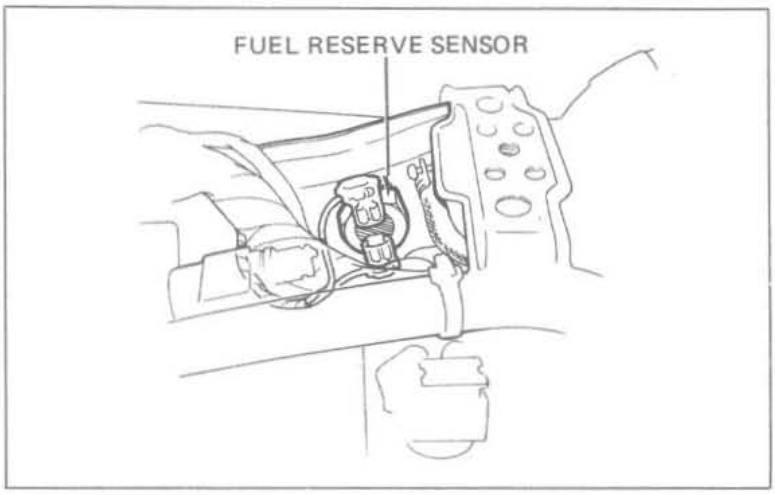

FUEL PUMP (V45 MAGNA)

WARNING

> *Do not allow flames or sparks near gasoline.*

Disconnect the fuel tube at the carburetor and hold a graduated beaker under the tube.
Turn the ignition switch on and let fuel flow into the beaker for 5 seconds, then turn the ignition switch off.
Multiply the amount in the beaker by 12 to determine the fuel pump flow capacity per minute.

FUEL PUMP FLOW CAPACITY:
614 cc (22 oz) ± 10%/minute

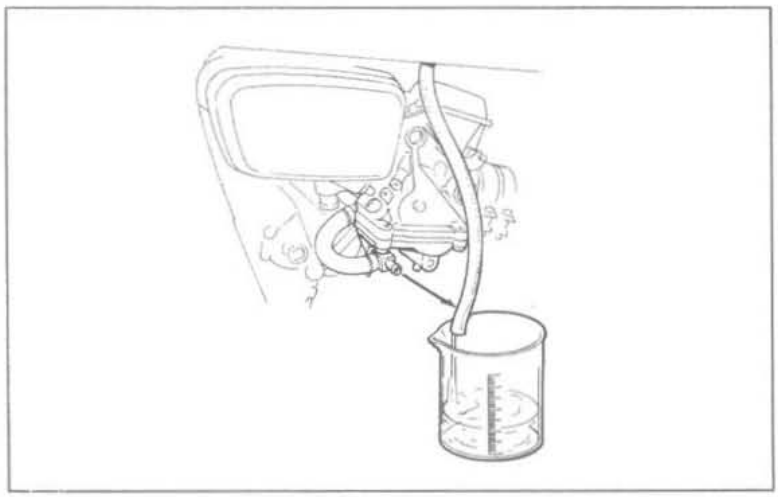

Date of Issue: May, 1982

THERMOSTATIC SWITCH

The cooling fan motor is actuated by the thermostatic switch located in the left tank of the radiator. Run the engine until coolant temperature reaches 88–92°C (191–197°F).
The fan motor should start running. The fan motor should stop when the coolant temperature drops to 83–87°C (182–188°F).

THERMOSTATIC SWITCH

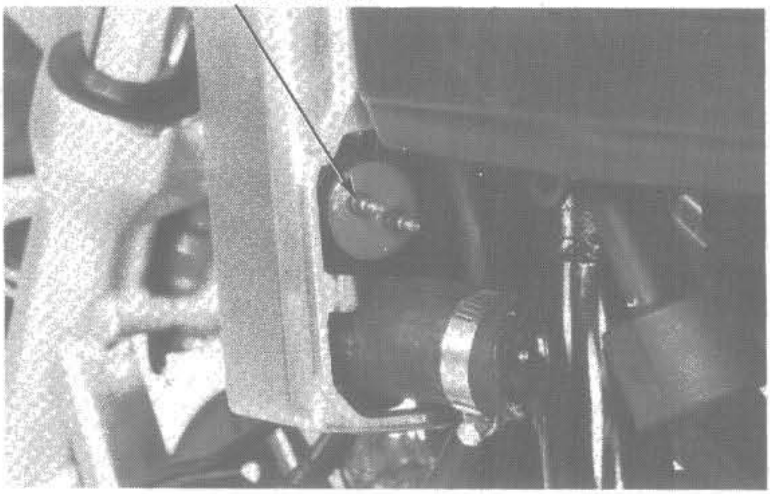

If the fan motor does not start, disconnect the black and green leads from the thermostatic switch and short them together with a jumper wire as shown. Turn the ignition switch on.
The cooling fan motor should start running.
If it starts, replace the fan thermostatic switch and retest.
If it does not start, check for battery voltage from the black lead (positive) to black/blue (negative) of the fan motor coupler.
If there is no voltage, check for a blown or faulty fuse, loose terminals or connectors, and an open circuit.

THERMOSTATIC SWITCH LEADS

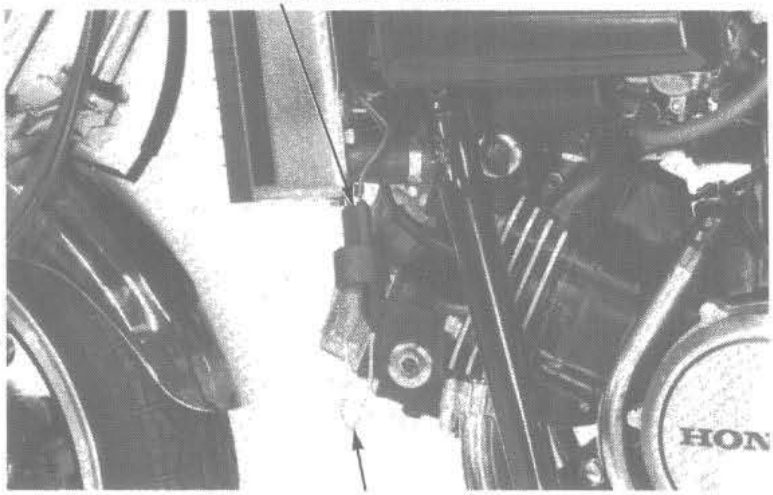

JUMPER WIRE

TEMPERATURE SENSOR

Disconnect the green/blue wire from the temperature sensor.

TEMPERATURE SENSOR

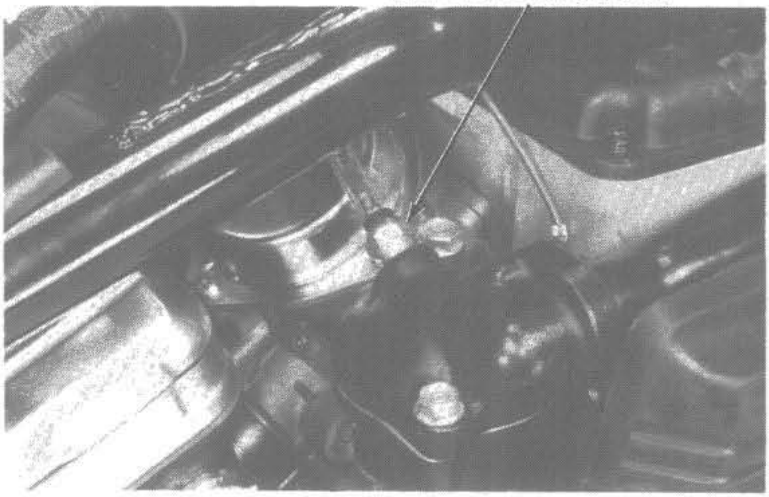

With the engine cold, use an ohmmeter to measure resistance between the temperature sensor terminal and the engine.

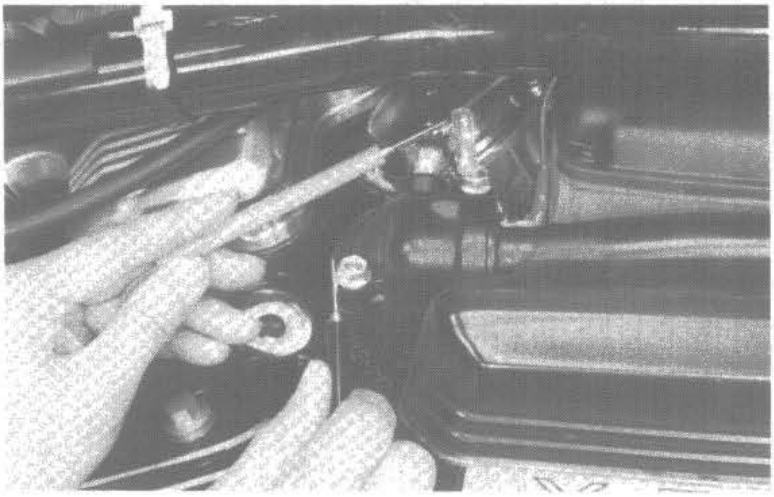

Check the temperature of the coolant.

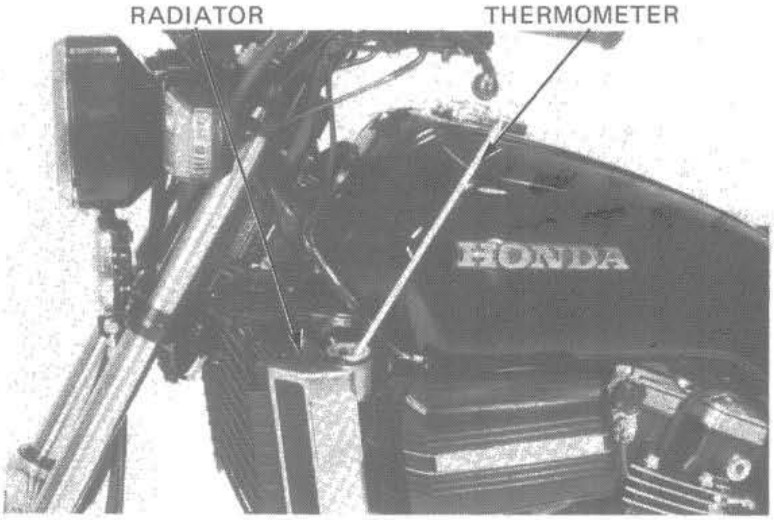

Run the engine and measure the change in resistance of the sensor with the engine at operating temperature.

Temperature	60°C (140°F)	85°C (185°F)	110°C (230°F)	120°C (248°F)
Resistance (Ohms)	104.0	43.9	20.3	16.1

Date of Issue: May, 1982

TEMPERATURE GAUGE

Disconnect the wire from the temperature sensor and short it to ground.
Turn the ignition switch to ON.
Temperature gauge segments (or needle) should move all the way to the right.

CAUTION

Do not leave the temperature sensor wire grounded for longer than a few seconds or the temperature gauge will be damaged.

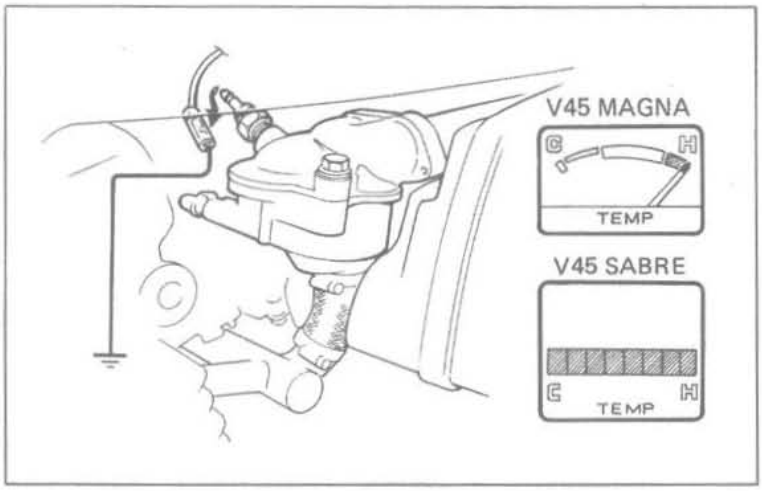

RADIATOR RESERVOIR SENSOR

Disconnect the wire coupler from the reservoir sensor.
Check for continuity between the sensor leads.

COOLANT MORE THAN "LOWER" LEVEL: CONTINUITY
COOLANT LESS THAN "LOWER" LEVEL: NO CONTINUITY

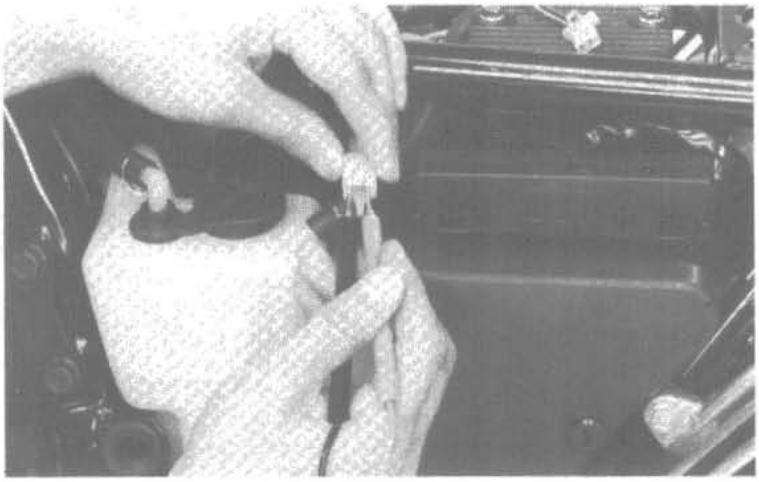

SPEED SENSOR (V45 SABRE)

Disconnect the speed sensor coupler in the headlight case.
Measure the resistance of the speed sensor while turning the front wheel slowly.

RESISTANCE: 0 ↔ ∞ Alternately

The meter should alternate between 0 and infinite ohms.

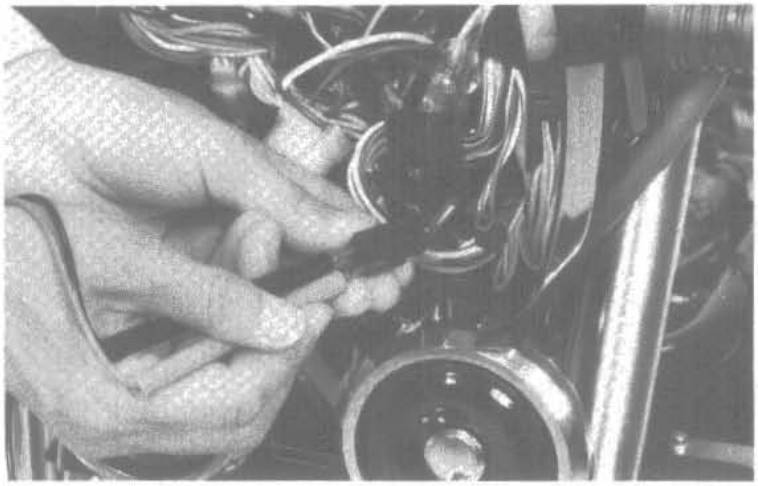

TRIPMETER (V45 SABRE)

If the speed sensor checks good, do the following: Slowly turn the front wheel and measure the odometer output voltage from the black lead (positive) to the black/brown lead (negative) at the odometer couplers.

VOLTAGE: 6–14 V

If there is voltage, replace the trip meter.
If there is no voltage, check and repair the wiring.

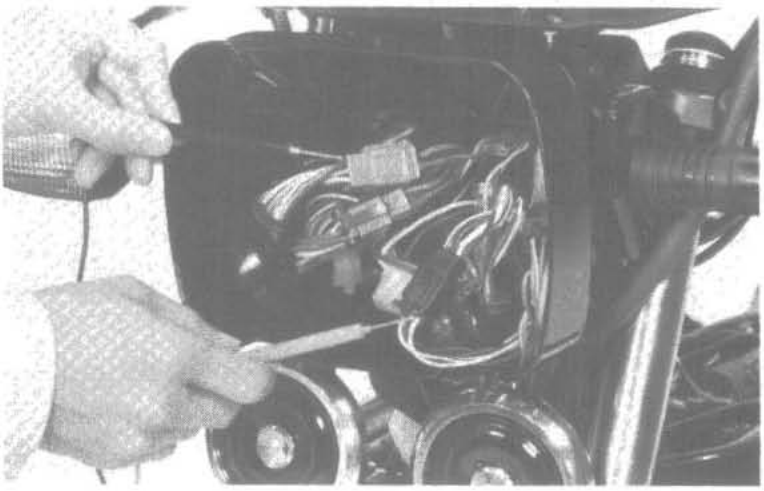

SPEEDOMETER (V45 SABRE)

If the speedometer is not functioning properly, check that the wire connections are clean and tight. If they are good, measure the voltage between the odometer and speedometer at the coupler; connect a voltmeter positive test lead to the black/yellow wire and negative test lead to the green/black wire. Set the voltmeter to the 25 VDC scale. Turn the ignition switch on and slowly turn the front wheel and watch the voltmeter. The voltmeter readings should alternate between 0 and 4–8 volts. If the voltage readings are correct, the speedometer unit is faulty and must be replaced.
If voltage readings are less than 4V, recheck the wire connections. Then recheck the speedometer's function.

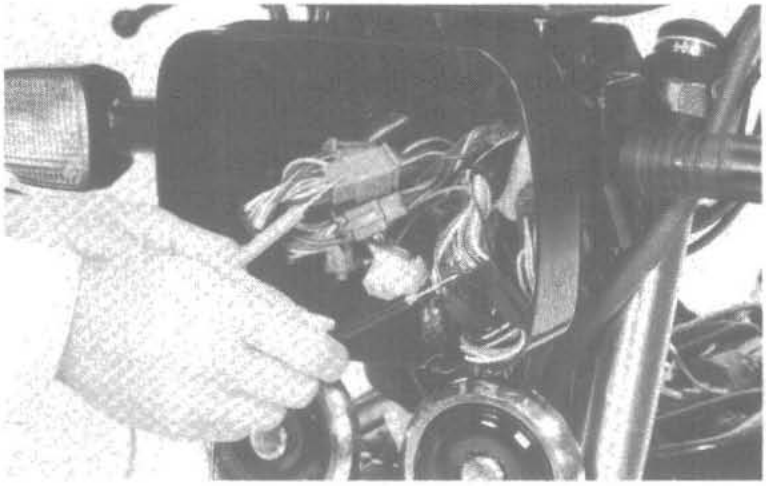

TACHOMETER

If the tachometer does not indicate properly, replace the 1–3 spark unit with a new one and recheck the operation.
If the problem still appears, replace the spark unit with the original one and tachometer with a new one.

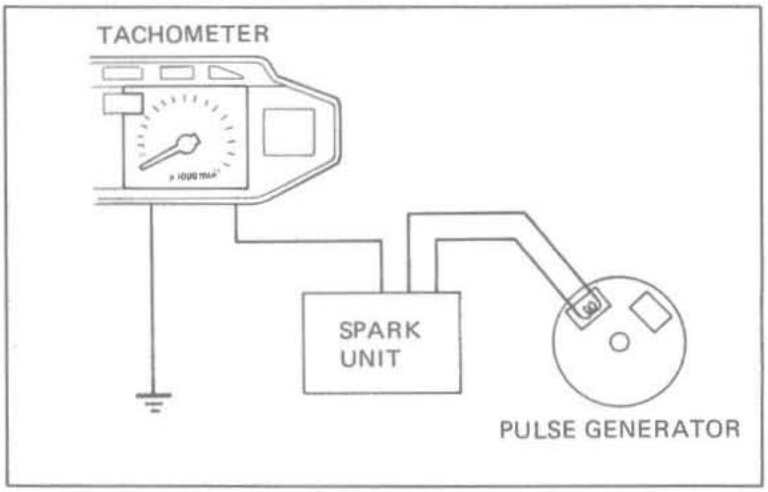

Date of Issue: May, 1982

CLOCK (V45 SABRE)

CLOCK LOG

If the clock does not operate properly, measure source voltage at the red lead (positive) and yellow/black lead (negative).
If there is voltage (more than 5V), replace the trip meter/clock.
If voltage is not available, check and repair the wiring of the appropriate source circuit.

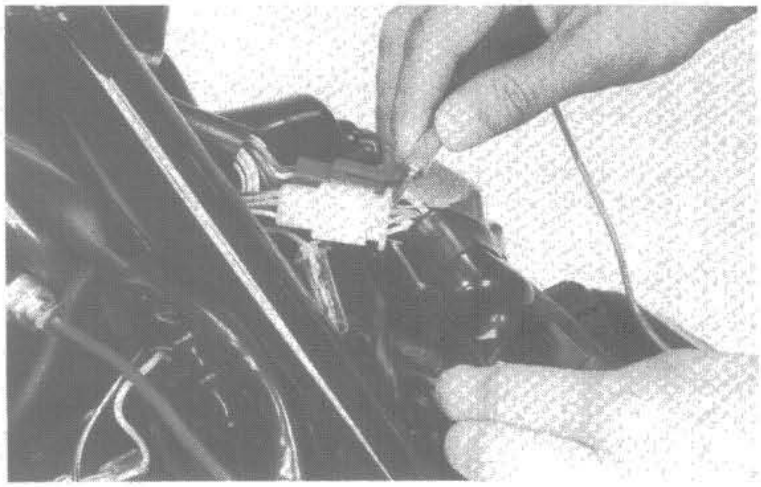

TRIP LOG

If the trip log does not operate properly, check the source voltage at the black/brown (positive) and the red/green (negative) with the ignition switch on.

VOLTAGE: 5V

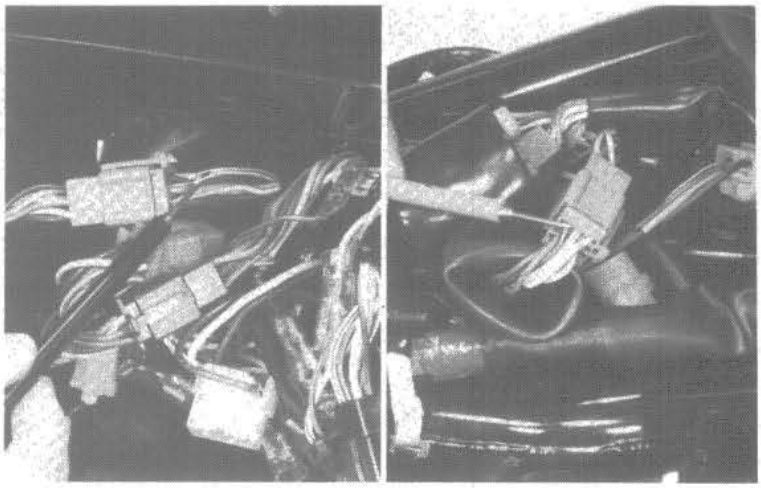

If the trip-clock function cannot be changed, check for continuity between the yellow/black and the red/blue leads.

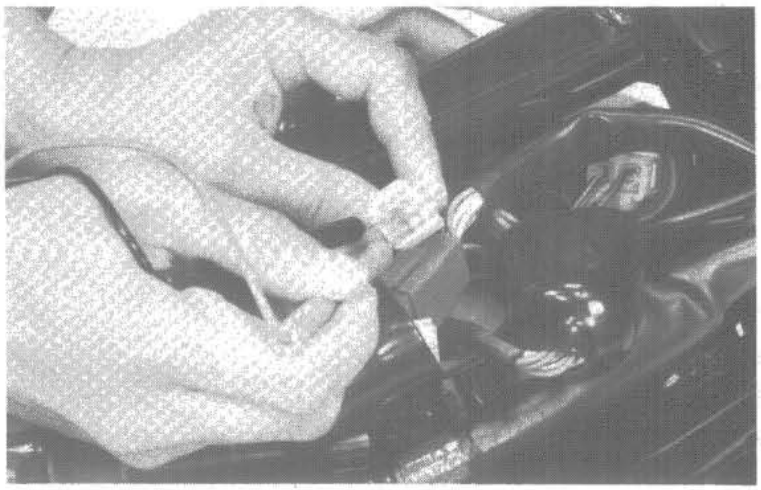

BRAKE AND TAIL LIGHT SENSOR

Turn the ignition switch on.
Check the source voltage at the black/brown lead. If there is no voltage, check and repair the source circuit.
If there is voltage, measure the voltage at the white/yellow (positive) and green/yellow (negative) wires.

VOLTAGE: 5 V

If there is no voltage, replace the sensor unit.

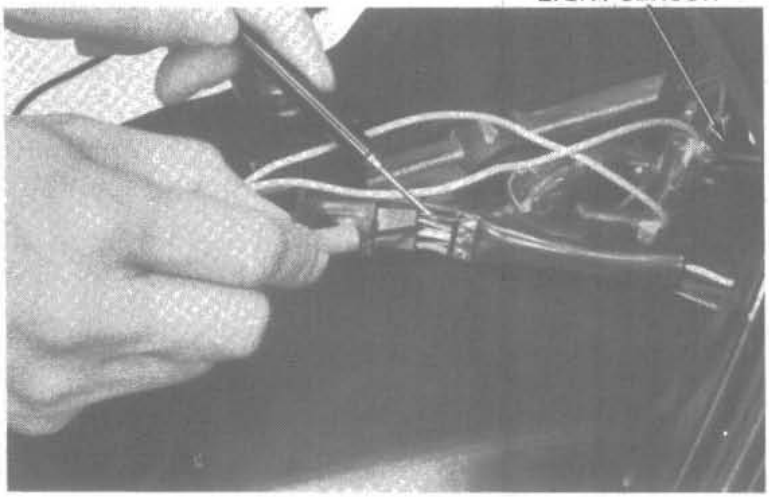

HEADLIGHT SENSOR (V45 SABRE)

Turn the ignition switch on.
Check the source voltage at the black/brown lead. If there is no voltage, check and repair the source circuit.

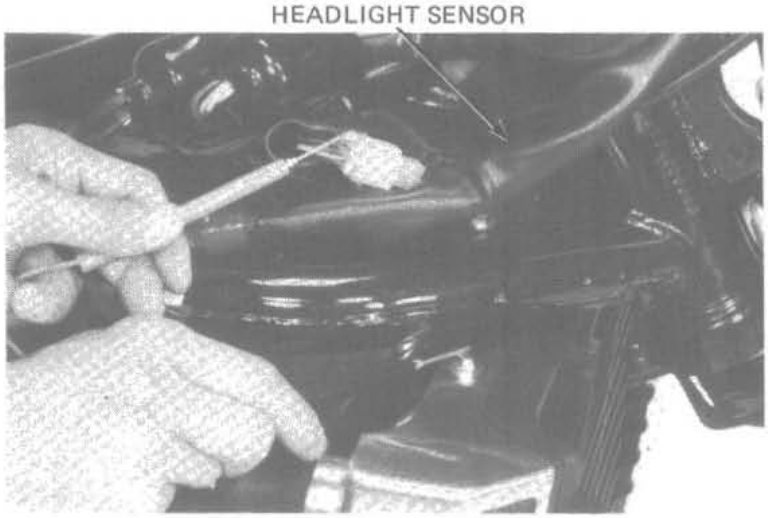

If there is voltage, measure voltage at the white/red (positive) and green/black (negative) wires.

VOLTAGE: 3–7 V

If there is no voltage, replace the headlight sensor.

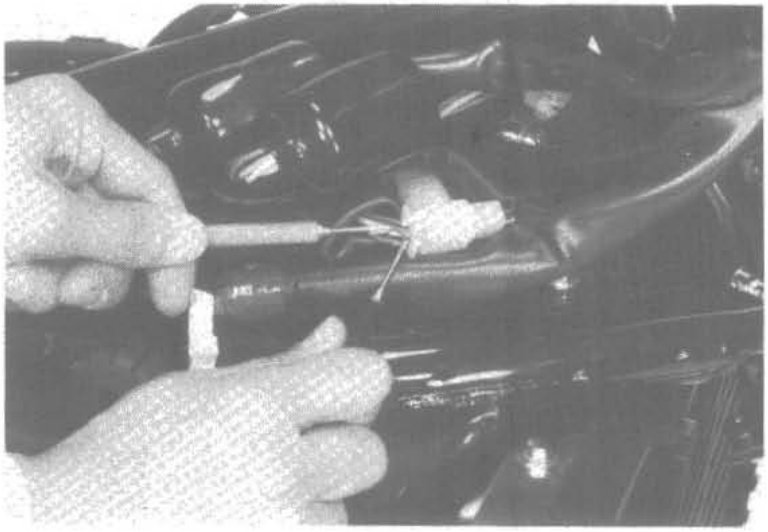

Date of Issue: January, 1982

BATTERY ELECTROLYTE LEVEL SENSOR (V45 SABRE)

Remove the battery electrolyte level sensor from the battery.

BATTERY ELECTROLYTE LEVEL SENSOR

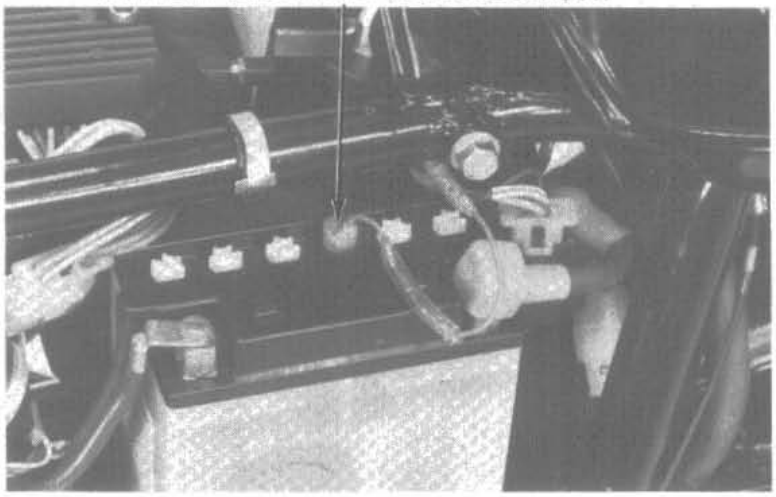

Measure the resistance of the sensor.

RESISTANCE: 680 ohms

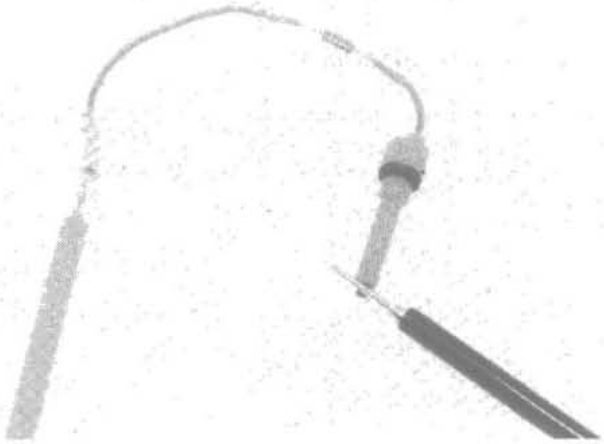

TURN SIGNAL CANCEL SYSTEM (V45 SABRE)

ANGLE SENSOR

Turn the handlebar right and left and check the angle sensor for wear, damage or looseness.

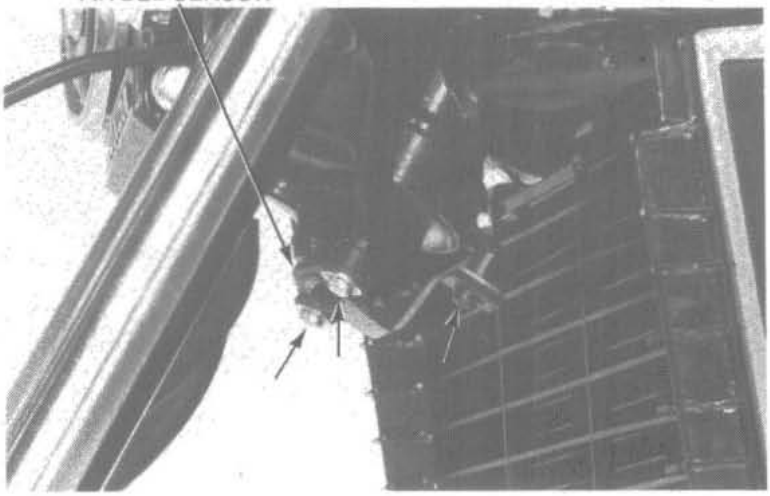

Remove the angle sensor (page 15-10).
Measure the resistance between the B/Y and the G/W leads.

RESISTANCE: 10–19 k ohms

Check the resistance between the W and G/W leads while turning the sensor arm slowly from the left to the right. The resistance should increase smoothly.

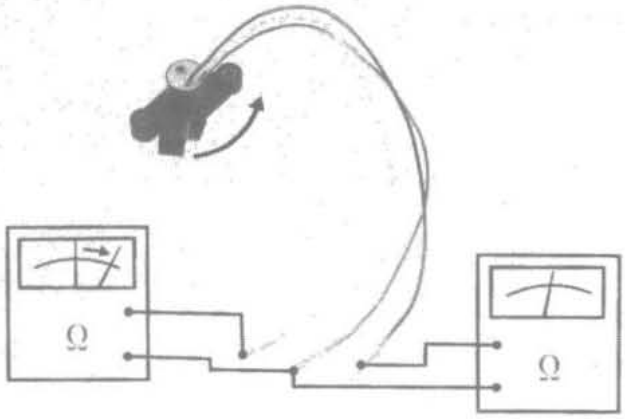

TURN SIGNAL SWITCH

Disconnect the cancel unit coupler.
Turn the turn signal switch to the left position and connect a jumper wire to the B/Bk and Br/B leads at the harness coupler.
The turn signal switch should return to the neutral position.
Perform the same test for the right turn position.

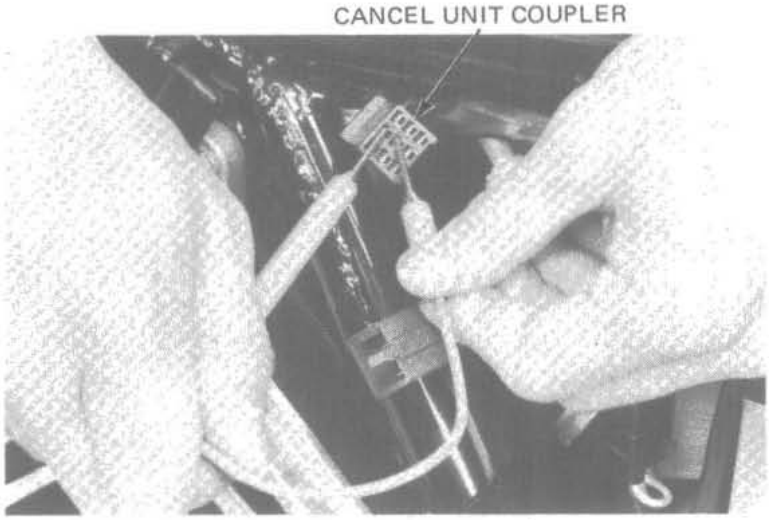

Date of Issue: May, 1982

SPEED SENSOR

Disconnect the cancel unit coupler,
Check for continuity between the W/Bk and the G lead terminals at the wire harness coupler while turning the front wheel slowly.

RESISTANCE: 0 ↔ ∞ Alternately

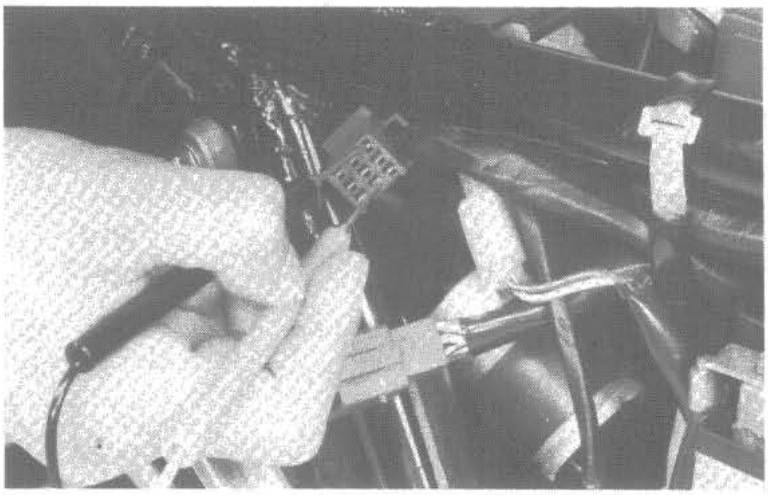

CANCEL UNIT

If the angle sensor, turn signal switch, and speed sensor are normal, and there is no open or short circuit, replace the cancel unit with a new one.

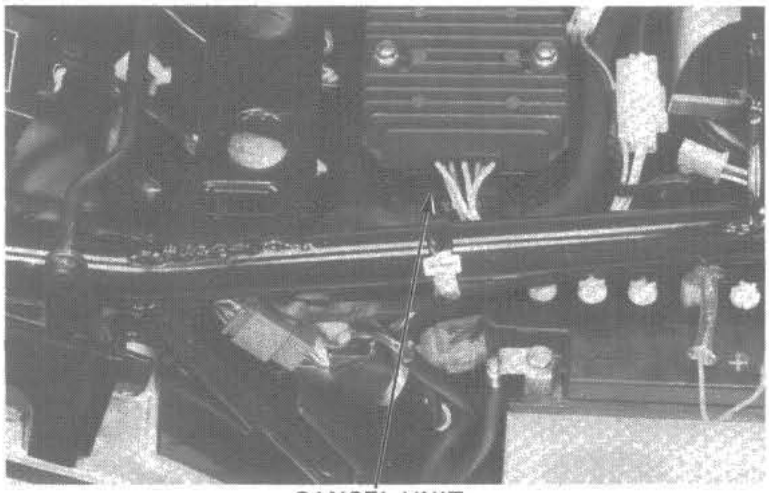

TURN SIGNAL CIRCUIT

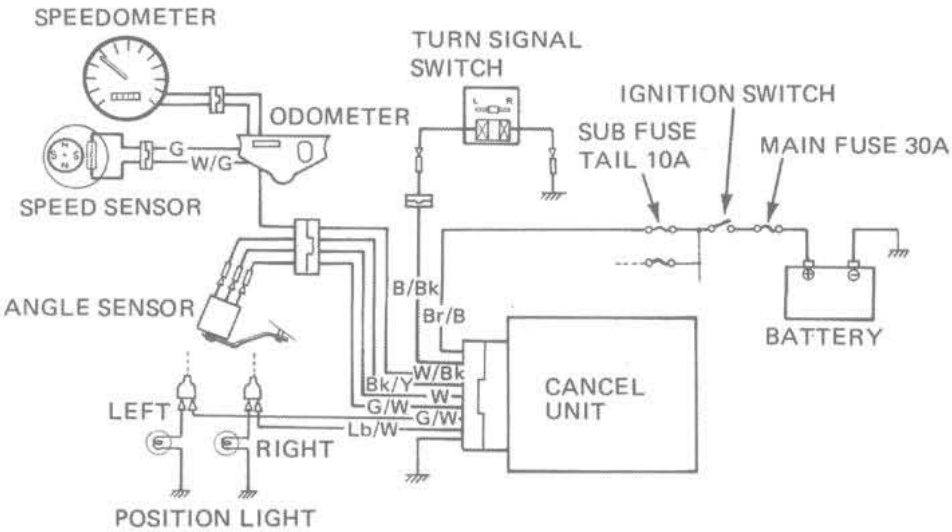

22. WIRING DIAGRAMS

V45 SABRE (VF750S)

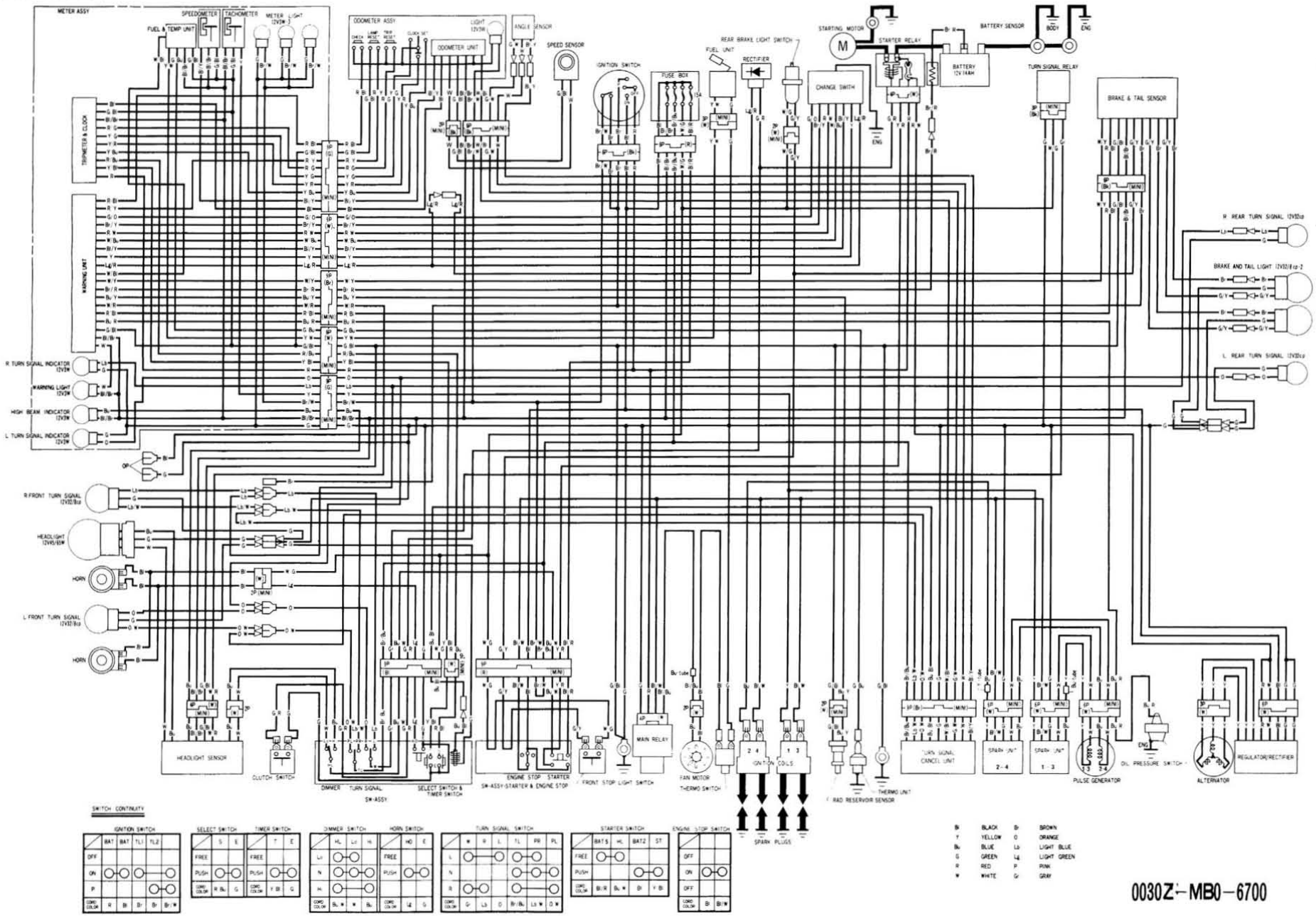

V45 MAGNA (VF750C)

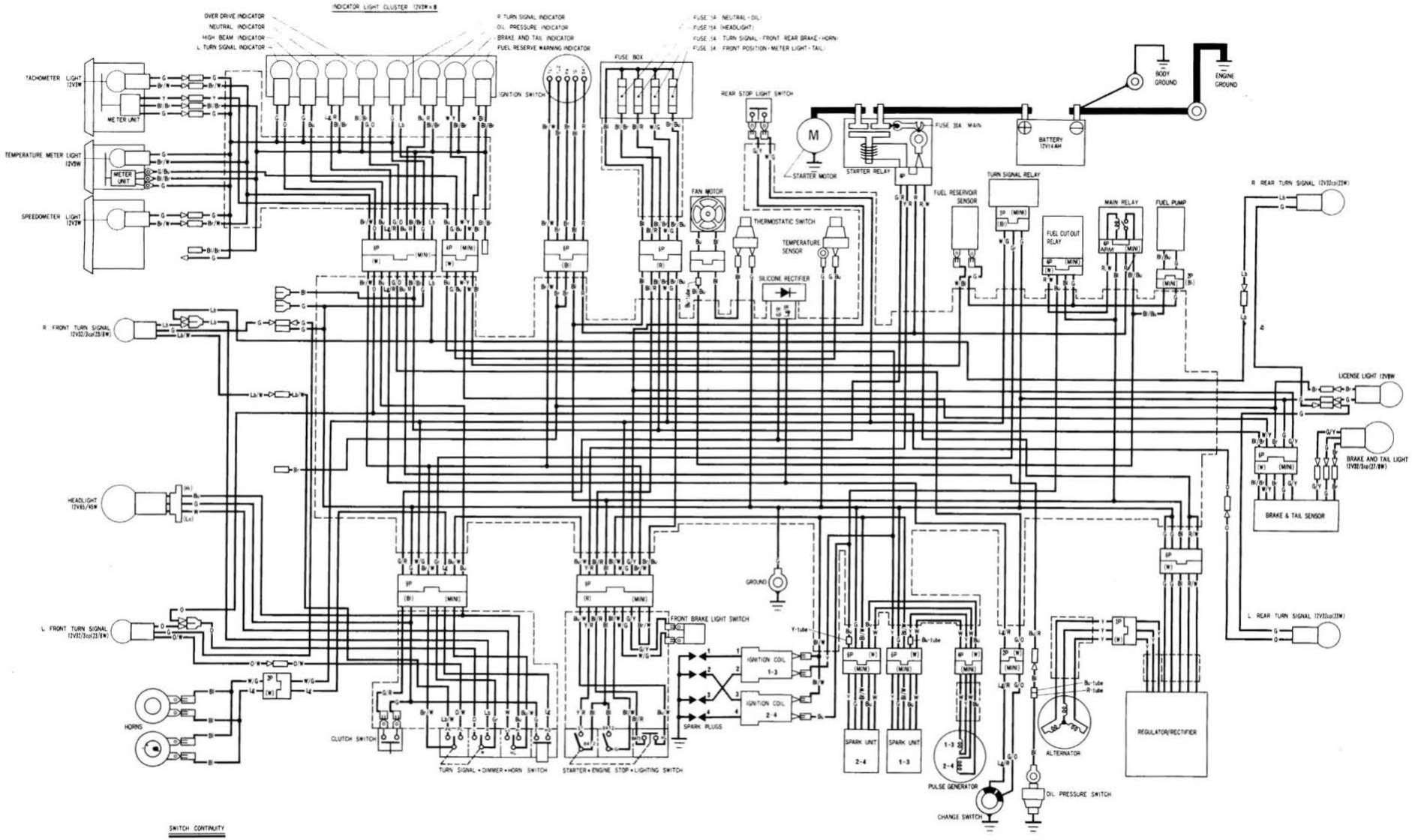

Date of Issue: October, 1982

23. TECHNICAL FEATURES

V-4 ENGINE FEATURES

The engine design is a DOHC, 16-valve, water cooled V-4 engine.
The cylinders are arranged in two banks of two cylinders each with the two banks set at a 90-degree angle to each other. Four valves per cylinder, two intake and two exhaust valves ensure a highly efficient intake and exhaust cycle.

- **Self-adjusting hydraulic clutch**
  Hydraulically assisted, the clutch requires a lighter lever pull compared to cable operated motorcycle clutches.
  This system also provides a consistently smooth feeling when the clutch lever is pulled in and released. The hydraulic system automatically compensates for wear and the only maintenance check required is the hydraulic fluid reservoir level.

- **Automatic cam chain adjuster**
  The automatic cam chain tensioner automatically compensates for cam chain wear, eliminating periodic adjustment and maintenance services.

- **Carburetors with bystarter valve**
  The carburetors deliver the proper amount of air/fuel mixture into the cylinder under all operating conditions.
  The bystarter valve in each carburetor provides sufficient fuel flow during cranking, making the engine ready to start in cold weather. The bystarter is controlled by the choke lever on the handlebar.

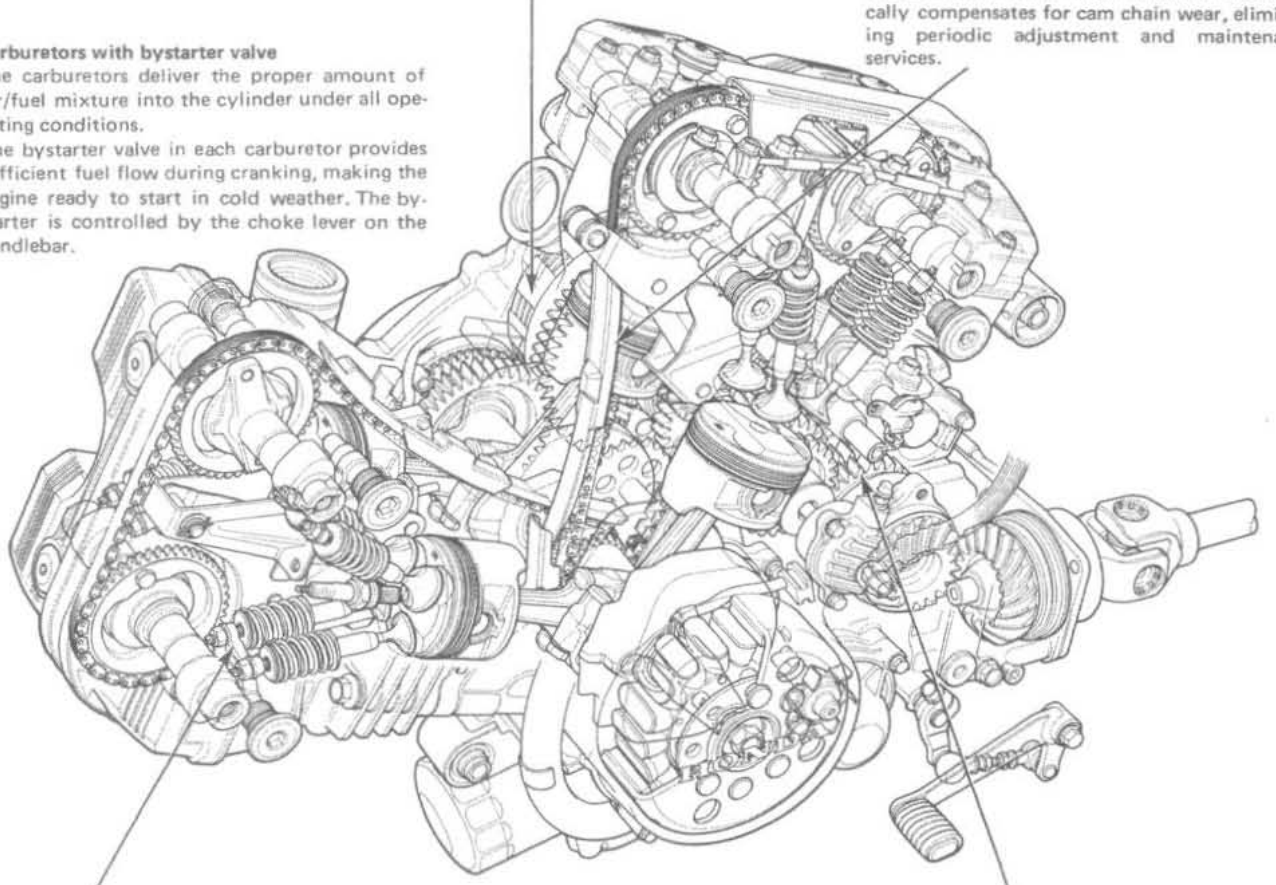

- **6-speed transmission**
  6th gear is an overdrive providing lower engine speed at normal road speeds. This provides better fuel consumption and longer engine life.

- **Rocker arms**
  With the rocker arms under the camshafts, overall weight is reduced and valve float at high rpm is virtually eliminated.

Date of Issue: May, 1982

AUTOMATIC CAM CHAIN TENSIONER

GENERAL

The tensioner consists of an arm, slipper, spring, lock plate, lock rod and cam chain guide. The self-locking rod is connected on one end to the slipper and on the other end to the lock plate as shown.
The spring maintains constant pressure to hold the slipper against the cam chain at all times. The lock plate prevents backward movement of the lock rod and tensioner slipper.

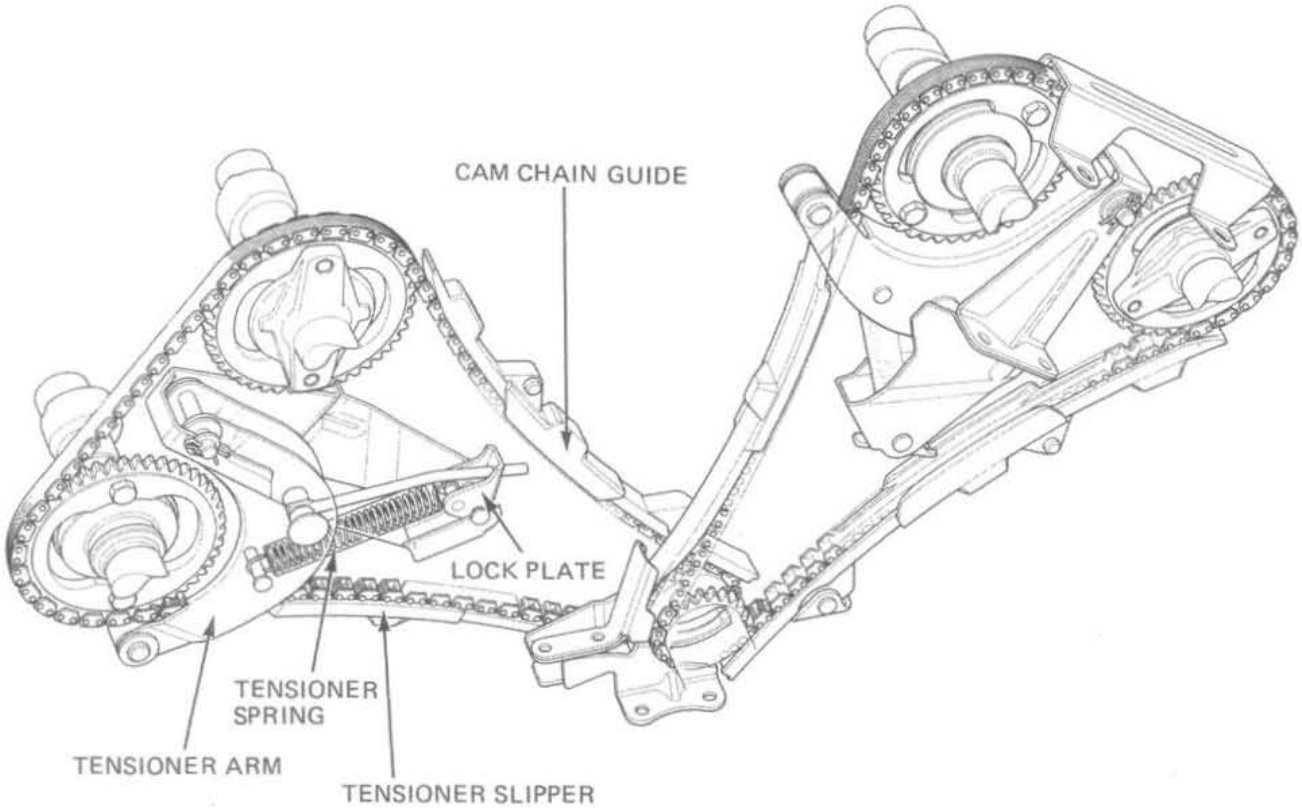

OPERATION

As the cam chain wears, the spring pulls the slipper to compensate by forcing the lock rod out. The lock plate prevents the rod from being pushed in by the cam chain during operation.

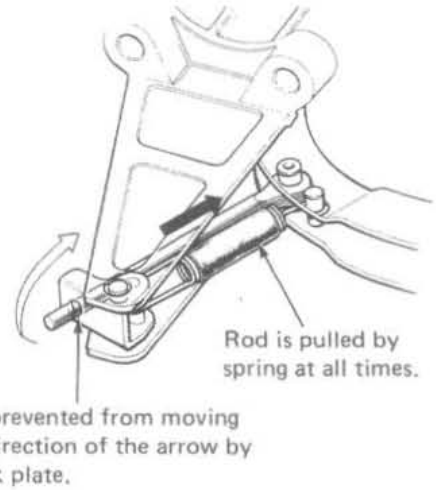

CARBURETOR CHOKE (BYSTARTER SYSTEM)

The engine requires a very rich mixture when it is being cranked. The choke (bystarter) valve opens when the choke lever is operated. As the engine is cranked, a high vacuum develops in the intake tract. This vacuum causes the slow jet to discharge a stream of fuel into the carburetor venturi.

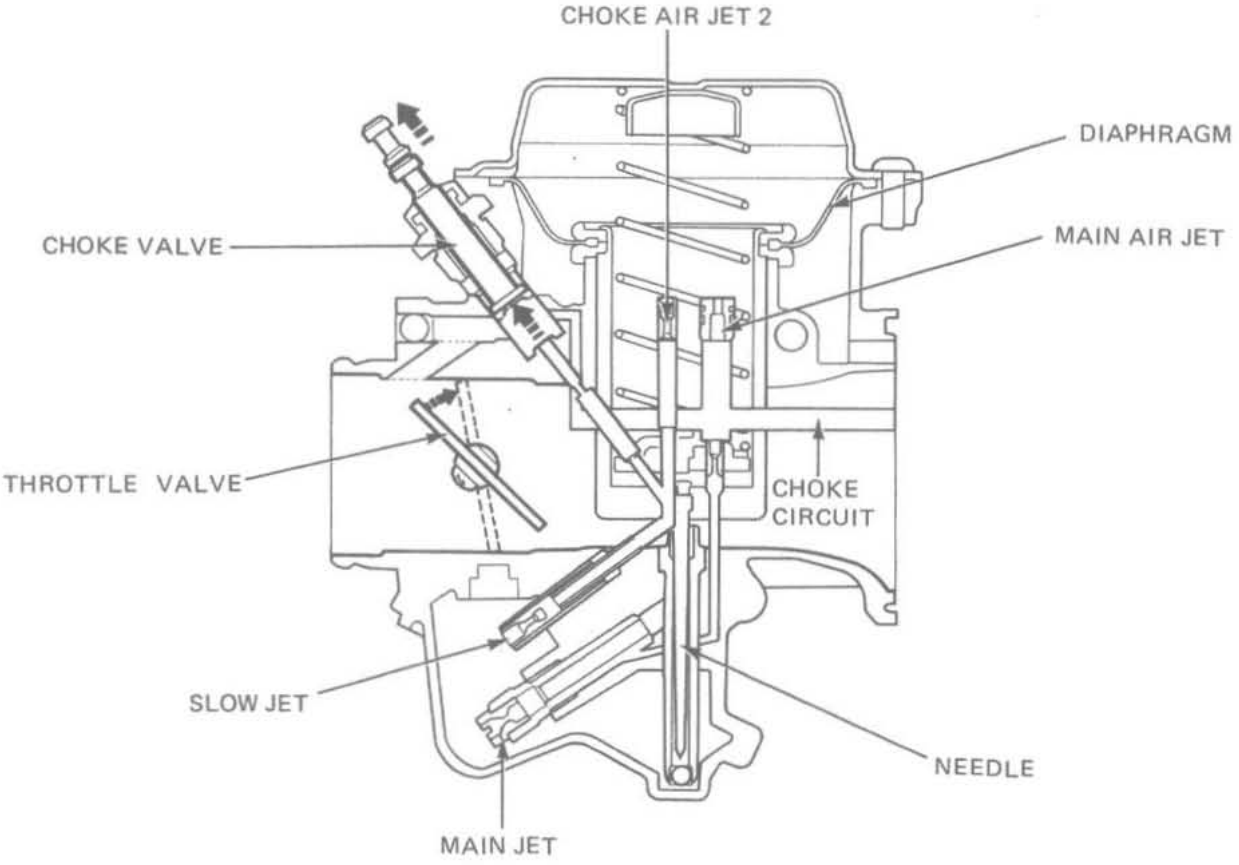

When the throttle valve is opened, vacuum in the manifold now works on the main air jet circuit through the choke circuit. Since, under this condition, no air can get past the main air jet into the main circuit, the quantity discharged is sufficient to produce a rich air-fuel mixture required for starting the engine.

Date of Issue: October, 1982

ANTI-DIVE FRONT SUSPENSION

GENERAL

This motorcycle has an anti-dive front suspension system with four-way adjustability to provide the desired ride under various braking conditions. The system consists of a piston, return spring, oil control orifice and body.

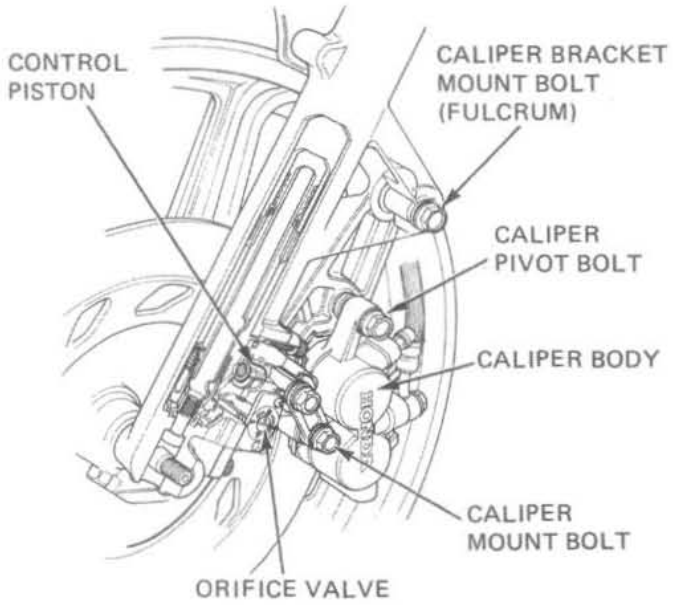

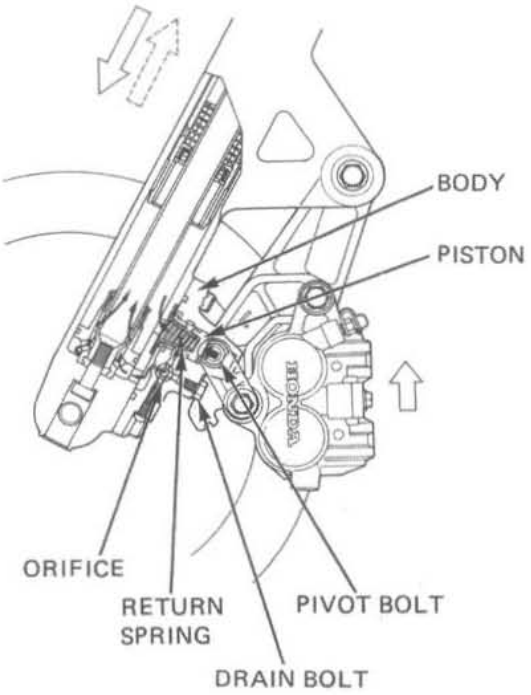

OPERATION

When the motorcycle is slowed or stopped, the brake disc is squeezed by the brake pads, causing the brake caliper to pivot on its bracket mounting bolt.

This movement causes the pivot bolt to push the piston in, uncovering the oil control orifice.

Since the orifice has four oil passages of different diameters, the desired damping can be selected by turning it. Always adjust the right and left to the same position.

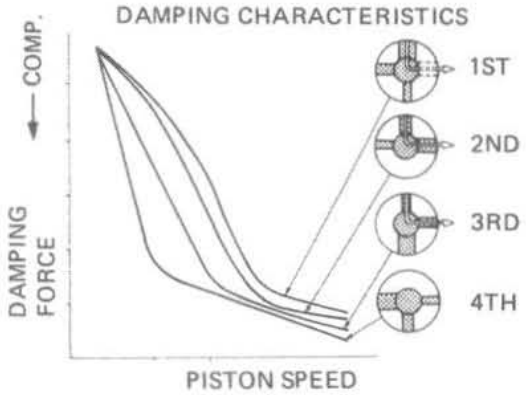

Front Suspension Adjustment Chart

POSITION	DAMPING EFFECT
1	SOFT
2	STANDARD
3	FIRM
4	EXTRA FIRM

AUTOMATIC TURN SIGNAL CANCELLING SYSTEM (V45 SABRE)

GENERAL

The system has a speed sensor, angle sensor, control unit, and a solenoid switch besides the turn signal switch.

- **SOLENOID SWITCH (Two-way)**
  The solenoid switch is a small electromagnet mounted in the left handlebar switch with the turn signal switch. When the control unit applies current to it, it returns the turn signal switch knob to the center position.

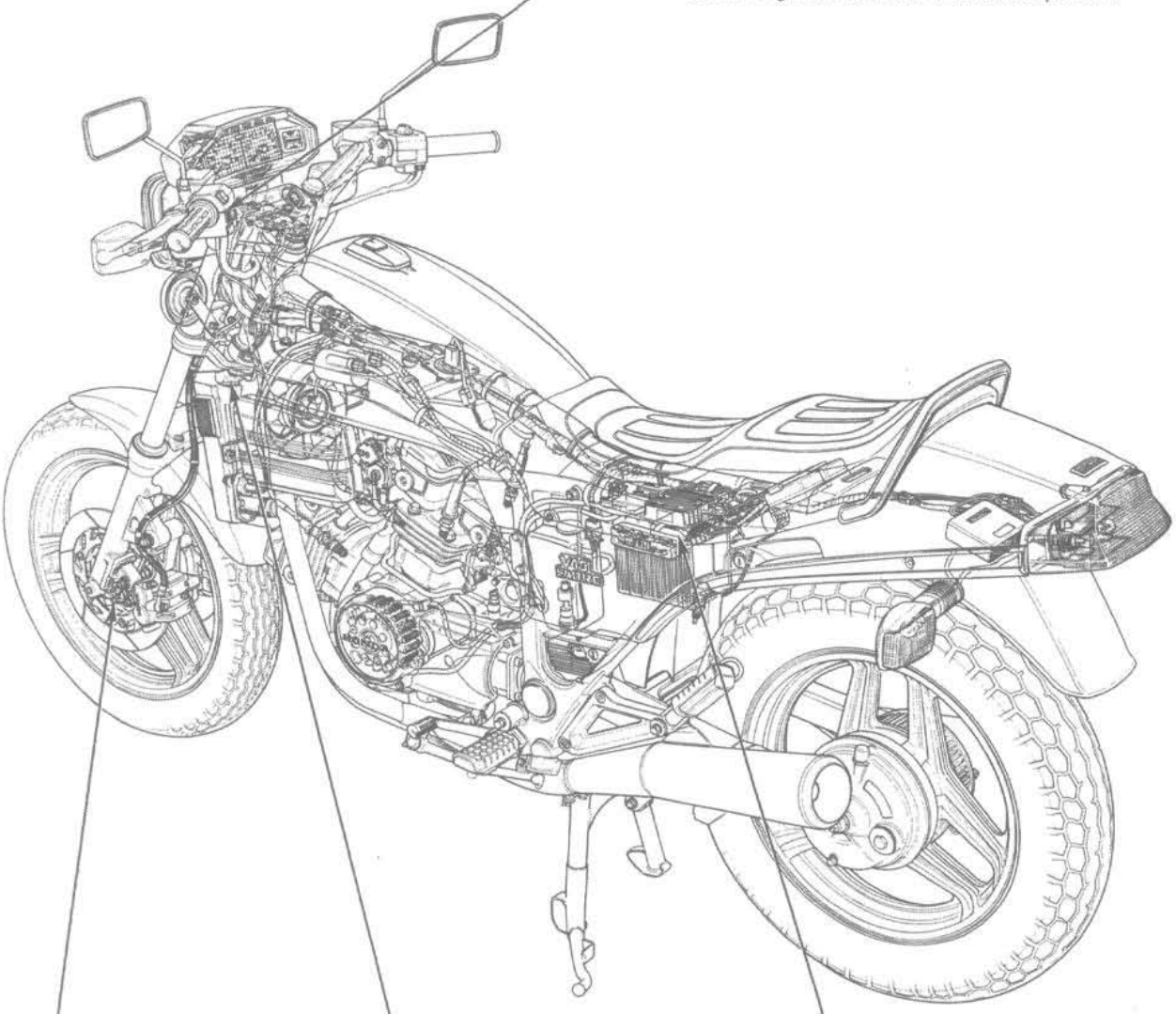

- **SPEED SENSOR**
  Located in the front wheel hub, it sends electronic pulses to the control unit that are proportional to road speed.
  This same sensor sends pulses to the electronic speedometer.

- **ANGLE SENSOR**
  A contact-type potentiometer, the angle sensor is located in the bottom of the steering stem. It measures the angle between the steering stem and the frame or steering angle. It sends the amount of steering angle information to the control unit. Note that steering angle is different than lean angle.

- **CONTROL UNIT**
  The control unit is a micro-processor that computes the information from the sensors and turn signal switch to determine when the turn signal should be cancelled. It is mounted near the battery and underneath the regulator/rectifier.

Date of Issue: May, 1982

OPERATION

When the turn signal switch is activated, the control unit starts keeping time. The two sensors send information to the control unit which then determine when the turn signal should be cancelled. The control unit applies electric current to the solenoid switch at that time which returns the turn signal switch knob to the center position.

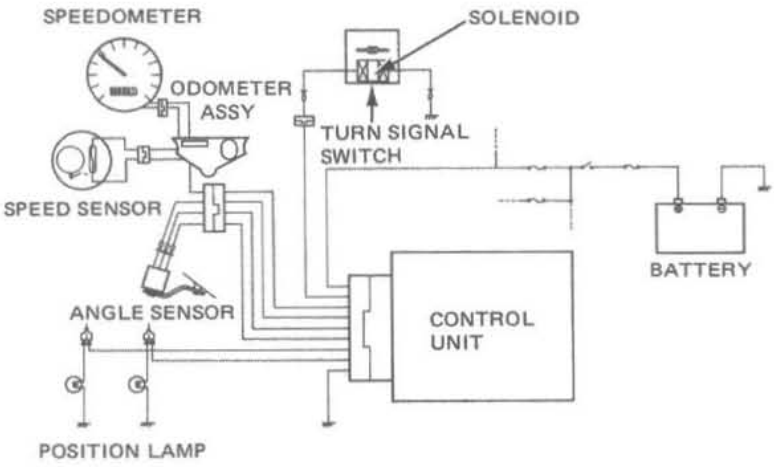

There are three circumstances that the control unit will cancel a turn signal.
They are:

1) When the steering angle, length of time of the steering angle and road speed are in the cancellation area shown in the graphs.

2) If it has been more than 5 seconds since the turn signal switch was activated and road speed is more than 45 km/h (28 mph).

3) If the motorcycle travels more than 120 m (394 ft) after the turn signal was activated and road speed is less than 45 km/h (28 mph).

< CANCEL RANGE BY SPEED >

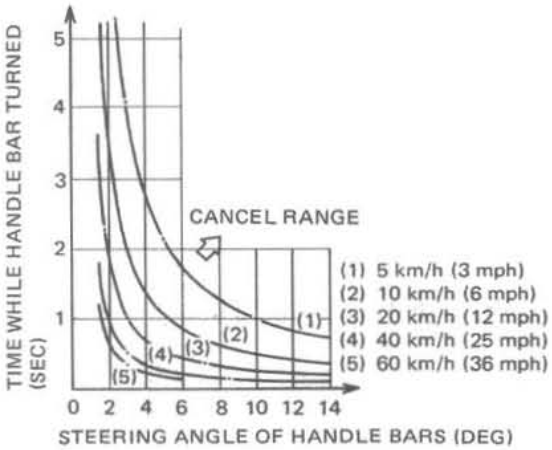

< CANCEL RANGE BY ANGLE >

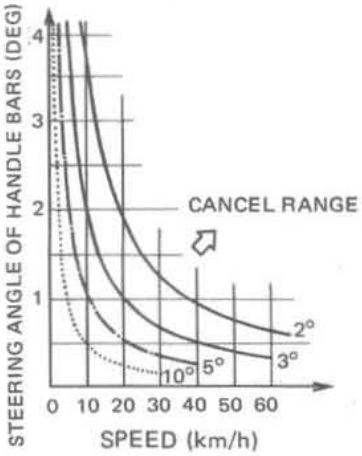

ELECTRIC SPEEDOMETER/TACHOMETER (Speedometer : V45 SABRE)

- Speedometer
  The speedometer consists of a magnet, speed sensor and speedometer gearbox.
  The speed sensor produces electric pulses proportional to the wheel speed.
- Tachometer
  Pulses from the spark unit operate the tachometer. The construction of this tachometer is essentially the same as the speedometer.

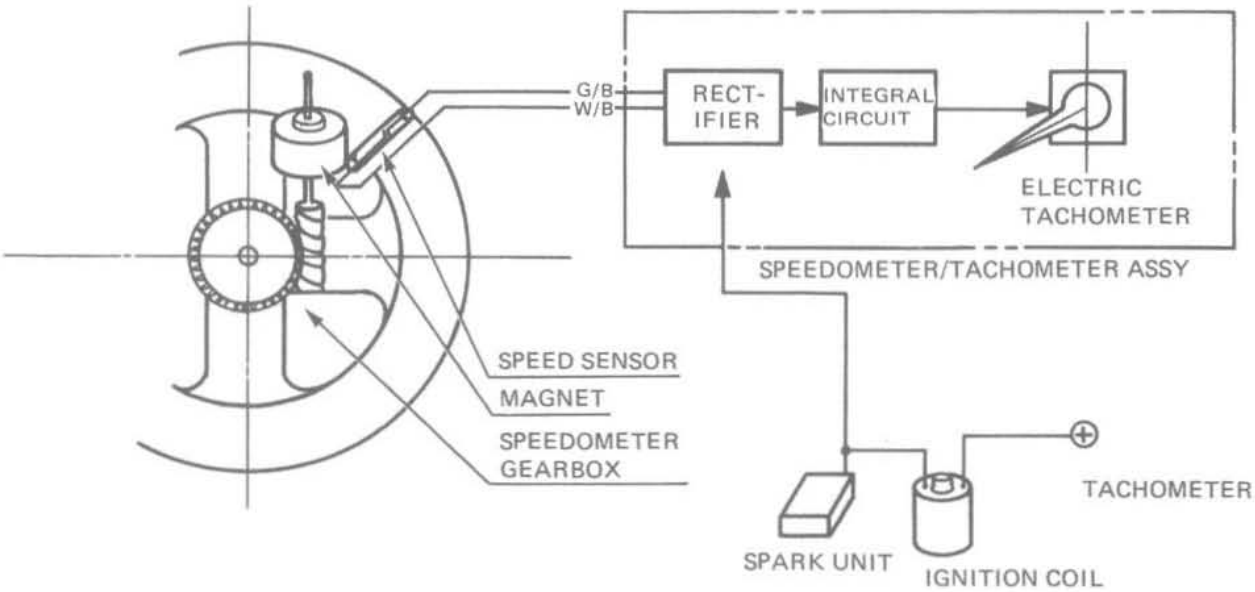

FUEL/WATER TEMPERATUBE GAUGES

In order that the rider will know at all times the water temperature in the cooling system, a temperature indicator is installed. The sensor uses a thermistor, whose resistance decreases with a rise in temperature allowing more voltage to be applied to the L.C.D. lighting more segments.
The fuel gauge uses a tank unit which contains a sliding contact and a float. The contact slides back and forth on a resistor as the float moves up and down in the fuel tank.
Both gauges contain an L.C.D. unit operated by outputs from a micro-computer for the digital display as shown.

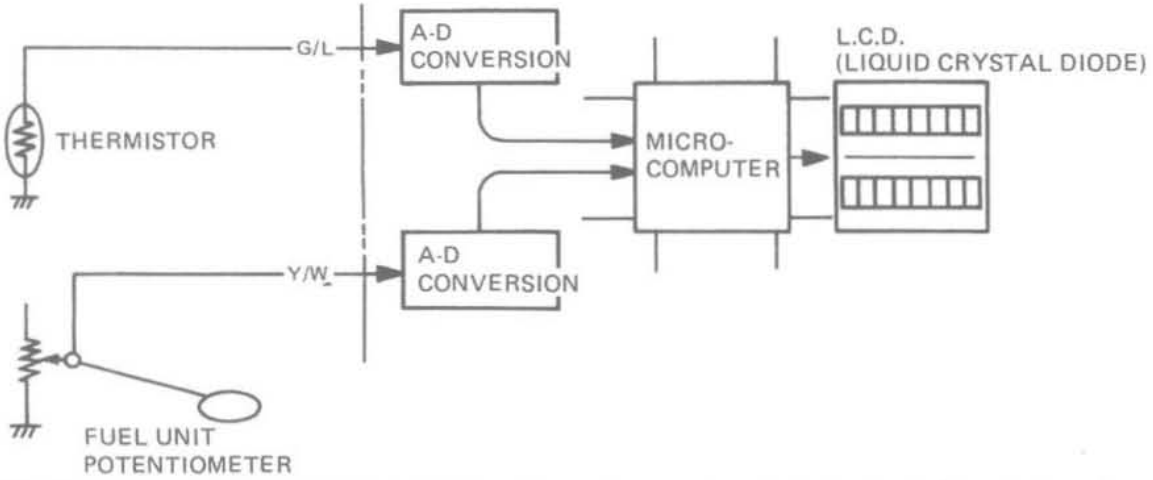

Date of Issue: May, 1982

FUEL PUMP (V45 MAGNA)

GENERAL

The fuel system uses an electric fuel pump to feed fuel from the fuel tank under the seat to the carburetors.
It consists of an electromagnet, an armature, a pair of contacts, a diaphragm and a pair of valves; an inlet and an outlet.

OPERATION

When the key is turned on, the electromagnet is energized, pulling the armature up. This stretches the diaghragm and forms a vacuum sucking fuel in through the inlet check valve. As the armature is pulled further, the contact points are opened, breaking the circuit to the electromagnet. The diaphragm is returned to its original position with a return spring. Fuel is then forced out of the outlet check valve and into the carburetors.

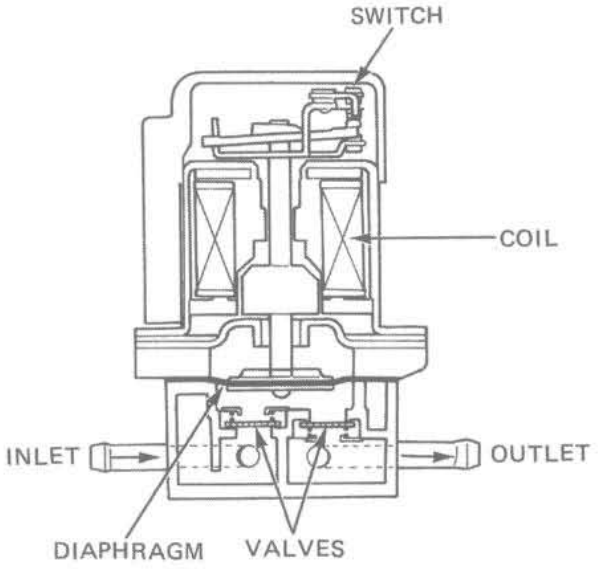

24. TROUBLESHOOTING

ENGINE DOES NOT START OR IS HARD TO START

		POSSIBLE CAUSE
1. Check fuel flow to carburetor	NOT REACHING CARBURETOR →	(1) Fuel tank empty (2) Clogged fuel tube or fuel filter (3) Sticking float valve (4) Clogged fuel tank cap breather hole (V45 SABRE) (5) Faulty fuel pump (V45 MAGNA) (6) Pinched fuel tank vent hose (V45 MAGNA)
REACHING CARBURETOR ↓		
2. Perform a 3-point spark test	WEAK OR NO SPARK →	(1) Faulty spark plugs (2) Fouled spark plugs (3) Faulty spark unit (4) Broken or shorted high tension wires (5) Faulty spark unit (6) Broken or shorted ignition coil (7) Faulty ignition switch (8) Faulty pulse generator
GOOD SPARK ↓		
3. Test cylinder compression	LOW COMPRESSION →	(1) Low battery charge (2) Improper valve clearance (too small) (3) Valve stuck open (4) Worn cylinder and piston rings (5) Damaged cylinder head gasket (6) Seized valve (7) Improper valve timing
COMPRESSION NORMAL ↓		
4. Start by following normal procedure	ENGINE STARTS BUT STOPS →	(1) Improper choke operation (2) Carburetor incorrectly adjusted (3) Intake pipe leaking (4) Improper ignition timing (Spark unit or pulse generator) (5) Fuel contaminated
ENGINE DOES NOT FIRE ↓		
5. Remove and inspect spark plug	WET PLUG →	(1) Carburetor flooded (2) Choke closed (3) Throttle valve open (4) Air cleaner dirty

ENGINE LACKS POWER

		POSSIBLE CAUSE
1. Raise wheels off ground and spin by hand	WHEELS DO NOT SPIN FREELY →	(1) Brake dragging (2) Worn or damaged wheel bearings (3) Wheel bearing needs lubrication (4) Final gear bearing damaged
WHEEL SPINS FREELY ↓		
2. Check tire pressure	PRESSURE LOW →	(1) Punctured tire (2) Faulty tire valve
PRESSURE NORMAL ↓		
3. Accelerate rapidly from low to second ↓	ENGINE SPEED CHANGED WHEN CLUTCH IS RELEASED →	(1) Clutch slipping (2) Worn clutch disc/plate (3) Warped clutch disc/plate
ENGINE SPEED LOWERED WHEN CLUTCH IS RELEASED ↓		
4. Accelrate lightly	ENGINE SPEED DOES NOT INCREASE →	(1) Carburetor choke closed (2) Clogged air cleaner (3) Restricted fuel flow (4) Pinched fuel tank breather tube (V45 SABRE) (5) Clogged muffler (6) Pinched fuel tank vent hose (V45 MAGNA)
ENIGNE SPEED INCREASES ↓		
5. Check ignition timing	INCORRECT →	(1) Faulty spark unit (2) Faulty pulse generator
CORRECT ↓		
6. Check valve clearance	INCORRECT →	(1) Improper valve adjustment (2) Worn valve seat
CORRECT ↓		
7. Test cylinder compression	TOO LOW →	(1) Valve stuck open (2) Worn cylinder and piston rings (3) Leaking head gasket (4) Improper valve timing
NORMAL ↓		
8. Check carburetor for clogging	CLOGGED →	(1) Carburetor not serviced frequently enough
NOT CLOGGED ↓		
9. Remove spark plug	FOULED OR DISCOLORED →	(1) Plugs not serviced frequently enough (2) Spark plug with incorrect heat range
NOT FOULED OR DISCOLORED ↓		
10. Check oil level and condition	INCORRECT →	(1) Oil level too high (2) Oil level too low (3) Contaminated oil
CORRECT ↓		
11. Remove cylinder head cover and inspect lubrication ↓	VALVE TRAIN NOT LUBRICATED PROPERLY →	(1) Clogged oil passage (2) Clogged oil control orifice
VALVE TRAIN LUBRICATED PROPERLY ↓		
12. Check for engine overheating	OVERHEATING →	(1) Excessive carbon build-up in combustion chamber (2) Use of poor quality fuel (3) Clutch slipping
NOT OVERHEATING ↓		
13. Accelerate or run at high speed	ENIGNE KNOCKS →	(1) Worn piston and cylinder (2) Wrong type of fuel (3) Excessive carbon build-up in combustion chamber (4) Ignition timing too advanced (Faulty spark unit)
ENGINE DOES NOT KNOCK		

Date of Issue: May, 1982

POOR PERFORMANCE AT LOW AND IDLE SPEEDS

		POSSIBLE CAUSE
1. Check ignition timing and valve clearance	INCORRECT →	(1) Improper valve clearance (2) Improper ignition timing (Faulty spark unit)
CORRECT ↓		
2. Check carburetor pilot screw adjustment	INCORRECT →	See Fuel System Section
CORRECT ↓		
3. Check for leaking intake pipe	LEAKING →	(1) Deteriorated insulator O-ring (2) Loose carburetor
NO LEAK ↓		
4. Perform spark test	WEAK OR INTERMITTENT SPARK →	(1) Faulty, carbon or wet fouled spark plug (2) Faulty spark unit (3) Faulty ignition coil
GOOD SPARK		

POOR PERFORMANCE AT HIGH SPEED

1. Check ignition timing and valve clearance	INCORRECT →	(1) Improper valve clearance (2) Faulty spark unit (3) Faulty pulse generator
CORRECT ↓		
2. Disconnect fuel tube at carburetor	FUEL FLOW RESTRICTED →	(1) Leak of fuel in tank (2) Clogged fuel line (3) Clogged fuel tank breather hole (4) Clogged fuel valve (5) Faulty fuel pump (V45 MAGNA)
FUEL FLOWS FREELY ↓		
3. Remove carburetor and check for clogged jet	CLOGGED →	Clean
NO CLOGGED JETS ↓		
4. Check valve timing	INCORRECT →	Cam sprocket not installed properly
CORRECT ↓		
5. Check valve spring tension	WEAK →	Faulty spring
NOT WEAKENED		

POOR HANDLING → Check tire pressure

1. If steering is heavy →	(1) Steering top thread nut to tight (2) Damaged steering head bearings
2. If either wheel is wobbling →	(1) Excessive wheel bearing play (2) Bent rim (3) Improperly installed wheel hub (4) Swingarm pivot bearing excessively worn (5) Bent frame (6) Swingarm pivot adjusting bolt too tight
3. If the motorcycle pulls to one side →	(1) Faulty shock absorber (2) Front and rear wheels not aligned (3) Bent front fork (4) Bent swingarm

25. '83 V45 SABRE MAGNA ADDENDUM

INTRODUCTION

This addendum contains information for the 1983 V45 SABRE and MAGNA. Refer to the base shop manual for service procedures and data not included in this addendum.

CONTENTS

1. GENERAL INFORMATION

SPECIFICATIONS

Only new specifications for the 1983 VF750S and FV750C are listed below.
See pages 1-2 and 1-3 for all other specifications.

VF750S

	ITEM	
DIMENSIONS	Overall height	1,160 mm (45.7 in)
	Wheelbase	1,570 mm (61.8 in)
	Seat height	790 mm (31.1 in)
	Foot peg height	330 mm (13.0 in)
	Ground clearance	145 mm (5.7 in)
	Dry weight	225 kg (496 lb)
	Curb weight	244 kg (538 lb)
FRAME	Front suspension, travel	Telescopic fork, 150 mm (5.9 in)
	Rear suspension, travel	Swingarm/shock absorber, 116 mm (4.6 in)
	Gross vehicle weight rating	430 kg (950 lbs)
	Caster angle	30°30′
	Front fork oil capacity	R: 360 cc (12.7 oz), L: 375 cc (13.2 oz)
ENGINE	Maximum horsepower	82 BPH/9,500 rpm
	Maximum torque	6.25 kg-m (45.2 ft-lb)/7,500 rpm
	Engine weight	85.9 kg (189.4 lb)
CARBURETION	Pilot screw initial setting	2-1/2 turns off seat
LIGHTS	Headlight (high/low beam)	60/55 watt

VF750C

	ITEM	
DIMENSIONS	Overall width	815 mm (32.0 in)
FRAME	Caster angle	30°
	Front fork oil capacity	R: 420 cc (14.8 oz), L: 447 cc (15.6 oz)
ENGINE	Maximum horsepower	81 BHP/9,500 rpm
	Maximum torque	6.2 kg-m (44.8 ft-lb)/7,500 rpm
CARBURETION	Pilot screw initial setting	2-1/2 turns off seat

Date of Issue: October, 1982

TORQUE VALUES

- ENGINE

Item	Q'ty	Thread Dia. (mm)	Torque N·m (kg-m, ft-lb)	Remarks
Clutch center lock nut	1	24	45–55 (4.5–5.5, 33–40)	

- CHASSIS

Item	Q'ty	Thread Dia. (mm)	Torque N·m (kg-m, ft-lb)	Remarks
Final driven flange bolt	5	10	50–60 (5.0–6.0, 36–43)	Apply liquid sealant.

TOOLS

- SPECIAL

Description	Part No.	Remarks	Ref. Sect.
Attachment	07943–MB0000	–	25

CABLE & HARNESS ROUTING

- V45 SABRE
  CABLE & HARNESS ROUTING

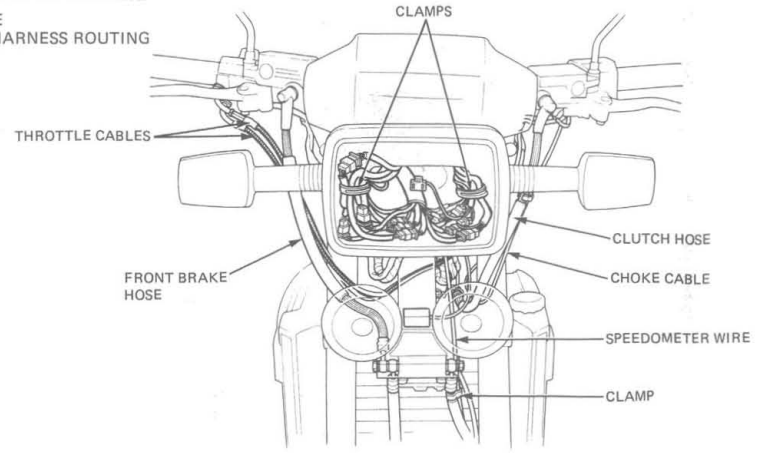

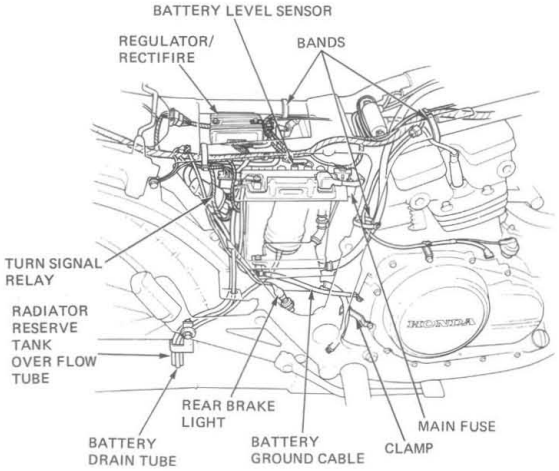

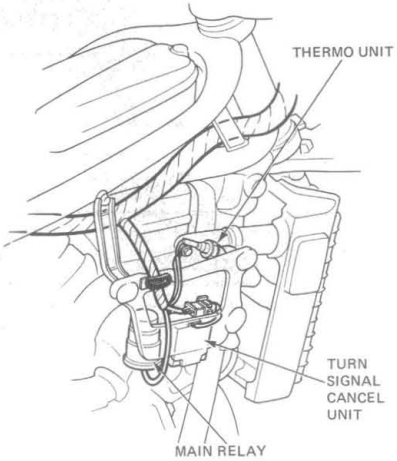

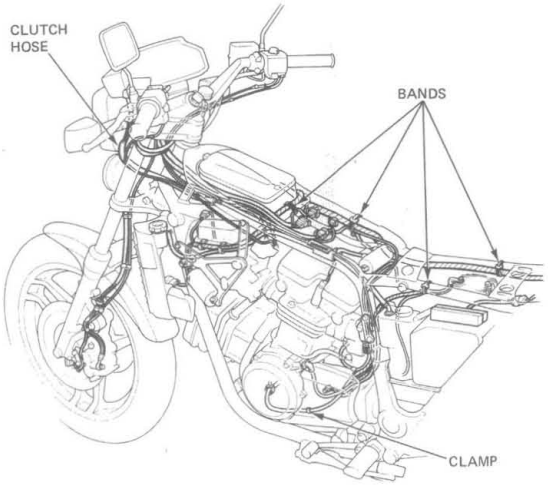

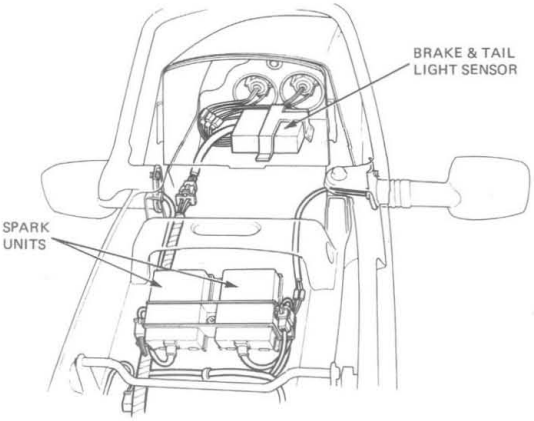

- V45 MAGNA
  CABLE & HARNESS ROUTING

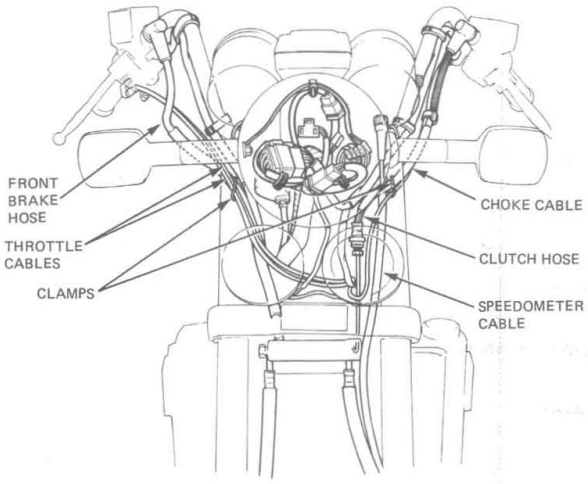

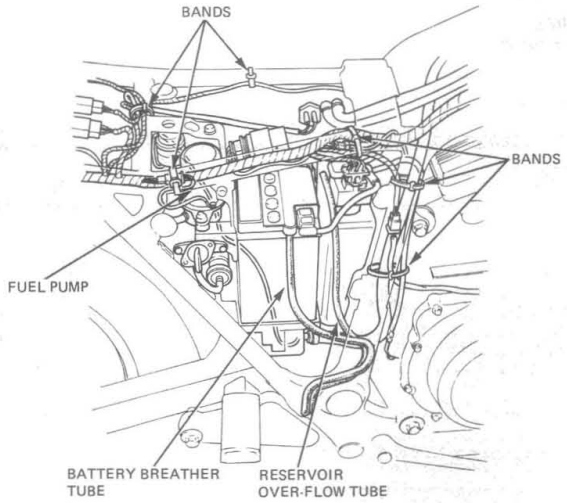

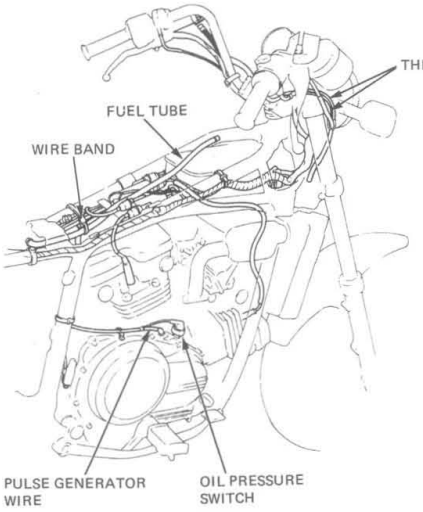

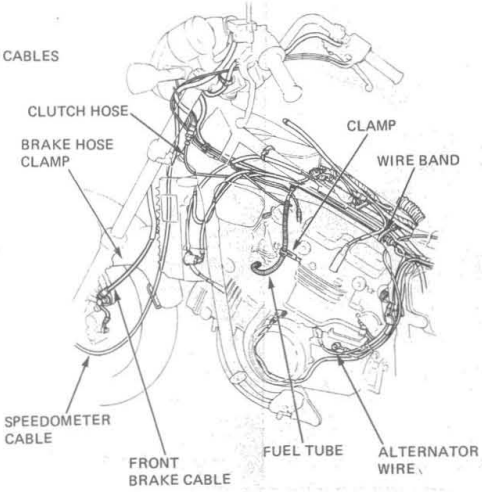

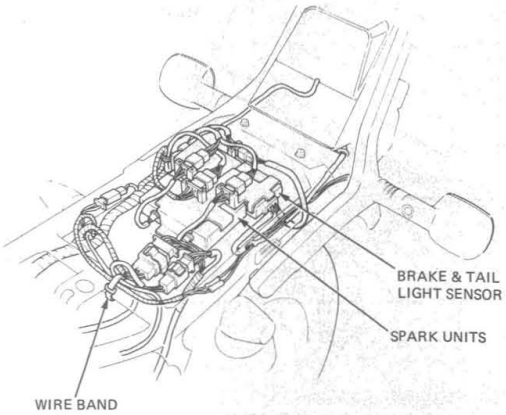

2. LUBRICATION

SPECIFICATIONS

Engine oil

Oil recommendation	Use Honda 4-Stroke Oil or equivalent. API Service Classification: SE or SF. VOSCOSITY: SAE 10W–40 Other viscosities shown in the chart may be used when the average temperature in your riding area is within the indicated range. OIL VISCOSITIES 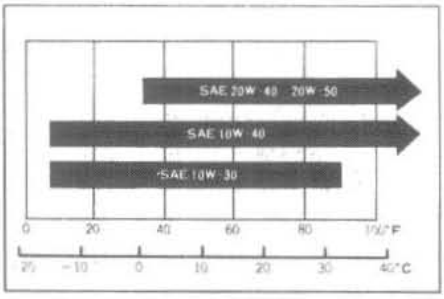

ENGINE OIL LEVEL

Run the engine and allow it to idle for 2–3 minutes.

Stop the engine and support the motorcycle on the center stand. Check the oil level with the dipstick after a few minutes. Do not screw in the cap when making this check.

If the level is below the lower level mark on the dipstick, remove the filler cap and add the specified oil. Start the engine and check the warning light/display. The light should go off when the engine starts. If it does not, check the oil pump function and/or oil circuit.

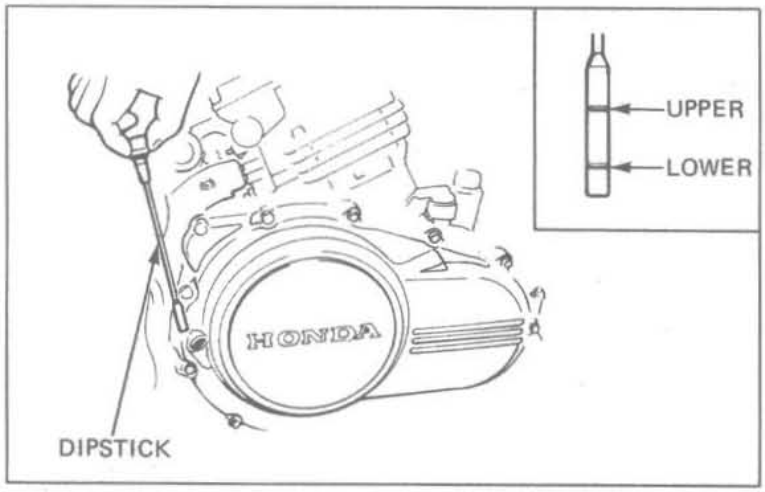

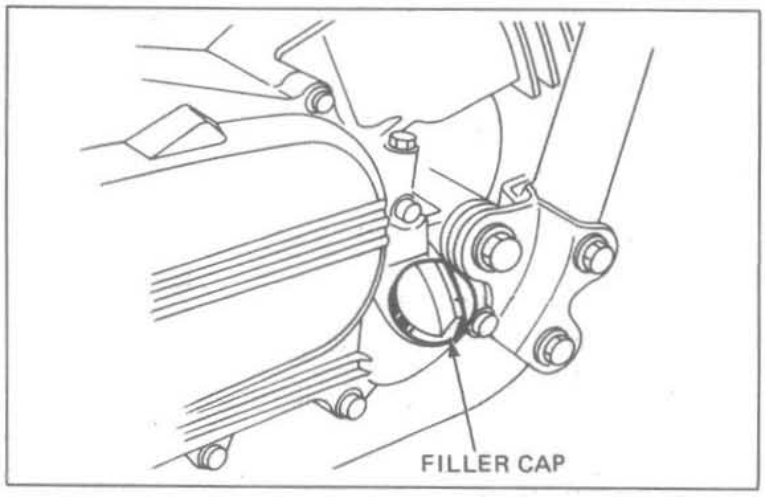

3. MAINTENANCE

MAINTENANCE SCHEDULES
V45 SABRE-VF750S

Perform the PRE-RIDE INSPECTION in the Owner's Manual at each scheduled maintenance period.

I: INSPECT AND CLEAN, ADJUST, LUBRICATE, OR REPLACE IF NECESSARY.
C: CLEAN, R: REPLACE, A: ADJUST, L: LUBRICATE

		FREQUENCY / ITEM	WHICHEVER COMES FIRST / EVERY	ODOMETER READING (NOTE 3) 600 mi (1,000 km)	4,000 mi (6,400 km)	8,000 mi (12,800 km)	12,000 mi (19,200 km)	16,000 mi (25,600 km)	20,000 mi (32,000 km)	24,000 mi (38,400 km)	Refer to page
EMISSION RELATED ITEMS	*	FUEL LINES				I		I		I	3-5
	*	THROTTLE OPERATION		I		I		I		I	3-6
	*	CARBURETOR-CHOKE				I		I		I	3-7
	*	AIR CLEANERS	NOTE 1		C	C	C	C	C	C	25-10
		CRANKCASE BREATHER	NOTE 2		C	C	C	C	C	C	3-9
		SPARK PLUGS			R	R	R	R	R	R	3-9
	*	VALVE CLEARANCE		I		I		I		I	3-11
		ENIGNE OIL	YEAR	R		R		R		R	25-7
		ENGINE OIL FILTER	YEAR	R		R		R		R	2-3
	*	CARBURETOR-SYNCHRONIZE		I		I		I		I	3-12
	*	CARBURETOR-IDLE SPEED		I	I	I	I	I	I	I	3-13
		RADIATOR COOLANT				I		I		*R	3-13
	*	RADIATOR CORE				I		I		I	3-14
	*	COOLING SYSTEM HOSES & CONNECTIONS		I		I		I		I	3-14
NON-EMISSION RELATED ITEMS		FINAL DRIVE OIL				I		I		R	2-10
	*	FINAL DRIVEN FLANGE	TIRE CHANGE			L		L		L	17-6,25-26
		BATTERY	MONTH	I	I	I	I	I	I	I	3-15
		BRAKE FLUID (FRONT)	MONTH I 2 YEARS* R	I	I	I	I	I	I	*R	3-15
		BRAKE SHOE/PAD WEAR			I	I	I	I	I	I	3-16
		BRAKE SYSTEM		I		I		I		I	3-16
	*	BRAKE LIGHT SWITCH		I		I		I		I	3-17
	*	HEADLIGHT AIM		I		I		I		I	3-17
		CLUTCH FLUID	MONTH I 2 YEARS *R	I	I	I	I	I	I	*R	3-18
		CLUTCH SYSTEM		I		I		I		I	3-18
		SIDE STAND				I		I		I	3-18
	*	SUSPENSION		I		I		I		I	3-19
	*	NUTS, BOLTS, FASTENERS		I		I		I		I	3-21
	**	WHEELS		I		I		I		I	3-21
	**	STEERING HEAD BEARINGS		I		I		I		I	3-21

* SHOULD BE SERVICED BY AN AUTHORIZED HONDA DEALER, UNLESS THE OWNER HAS PROPER TOOLS AND SERVICE DATA AND IS MECHANICALLY QUALIFIED.

** IN THE INTEREST OF SAFETY, WE RECOMMEND THESE ITEMS BE SERVICED ONLY BY AN AUTHORIZED HONDA DEALER.

NOTES:
1. SERVICE MORE FREQUENTLY WHEN RIDING IN DUSTY AREAS.
2. SERVICE MORE FREQUENTLY WHEN RIDING IN RAIN OR AT FULL THROTTLE (U.S.A. ONLY).
3. FOR HIGHER ODOMETER READINGS, REPEAT AT THE FREQUENCY INTERVAL ESTABLISHED HERE.

Date of Issue: October, 1982

V45 MAGNA-VF750C

Perform the PRE-RIDE INSPECTION in the Owner's Manual at each scheduled maintenance period.

I: INSPECT AND CLEAN, ADJUST, LUBRICATE, OR REPLACE IF NECESSARY.
C: CLEAN, R: REPLACE, A: ADJUST, L: LUBRICATE

		FREQUENCY / ITEM	WHICHEVER COMES FIRST / EVERY	ODOMETER READING (NOTE 3) 600 mi (1,000 km)	4,000 mi (6,400 km)	8,000 mi (12,800 km)	12,000 mi (19,200 km)	16,000 mi (25,600 km)	20,000 mi (32,000 km)	24,000 mi (38,400 km)	Refer to page
EMISSION RELATED ITEMS	*	FUEL LINES				I		I		I	3-5
	*	FUEL FILTER								R	3-5
	*	THROTTLE OPERATION		I		I		I		I	3-6
	*	CARBURETOR-CHOKE				I		I		I	3-6
	*	AIR CLEANER	NOTE 1			R		R		R	3-7
		CRANKCASE BREATHER	NOTE 2		C	C	C	C	C	C	3-9
		SPARK PLUGS			R	R	R	R	R	R	3-9
	*	VALVE CLEARANCE		I		I		I		I	3-11
		ENGINE OIL	YEAR	R		R		R		R	2-3
		ENGINE OIL FILTER	YEAR	R		R		R		R	2-3
	*	CARBURETOR-SYNCHRONIZE		I		I		I		I	3-12
	*	CARBURETOR-IDLE SPEED		I	I	I	I	I	I	I	3-13
		RADIATOR COOLANT				I		I		*R	3-13
	*	RADIATOR CORE				I		I		I	3-14
	*	COOLING SYSTEM HOSES & CONNECTIONS		I		I		I		I	3-14
NON-EMISSION RELATED ITEMS		FINAL DRIVE OIL				I		I		R	2-10
	*	FINAL DRIVEN FLANGE	TIRE CHANGE			L		L		L	17-6
		BATTERY	MONTH	I	I	I	I	I	I	I	3-15
		BRAKE FLUID (FRONT)	MONTH I 2 YEARS* R	I	I	I	I	I	I	*R	3-15
		BRAKE SHOE/PAD WEAR			I	I	I	I	I	I	3-16
		BRAKE SYSTEM		I		I		I		I	3-16
	*	BRAKE LIGHT SWITCH		I		I		I		I	3-17
	*	HEADLIGHT AIM		I		I		I		I	3-17
		CLUTCH FLUID	MONTH I 2 YEARS *R	I	I	I	I	I	I	*R	3-18
		CLUTCH SYSTEM		I		I		I		I	3-18
		SIDE STAND				I		I		I	3-18
	*	SUSPENSION		I		I		I		I	3-19
	*	NUTS, BOLTS, FASTENERS		I		I		I		I	3-21
	**	WHEELS		I		I		I		I	3-21
	**	STEERING HEAD BEARINGS		I		I		I		I	3-21

* SHOULD BE SERVICED BY AN AUTHORIZED HONDA DEALER, UNLESS THE OWNER HAS PROPER TOOLS AND SERVICE DATA AND IS MECHANICALLY QUALIFIED.

** IN THE INTEREST OF SAFETY, WE RECOMMEND THESE ITEMS BE SERVICED ONLY BY AN AUTHORIZED HONDA DEALER.

NOTES: 1. SERVCIE MORE FREQUENTLY WHEN RIDING IN DUSTY AREAS.
2. SERVICE MORE FREQUENTLY WHEN RIDING IN RAIN OR AT FULL THROTTLE (U.S.A. ONLY).
3. FOR HIGHER ODOMETER READINGS, REPEAT AT THE FREQUENCY INTERVAL ESTABLISHED HERE.

AIR CLEANER (V45 SABRE)

Remove the fuel tank.
Remove the two air cleaner case cover mounting bolts and air cleaner case cover.

Remove the element setting plate B and element.

Wash the elements in non-flammable or high flash point solvent and let it dry.
Soak the elements in gear oil (SAE #80—#90) and squeeze out the excess.

Install the removed parts in the reverse order of disassembly.

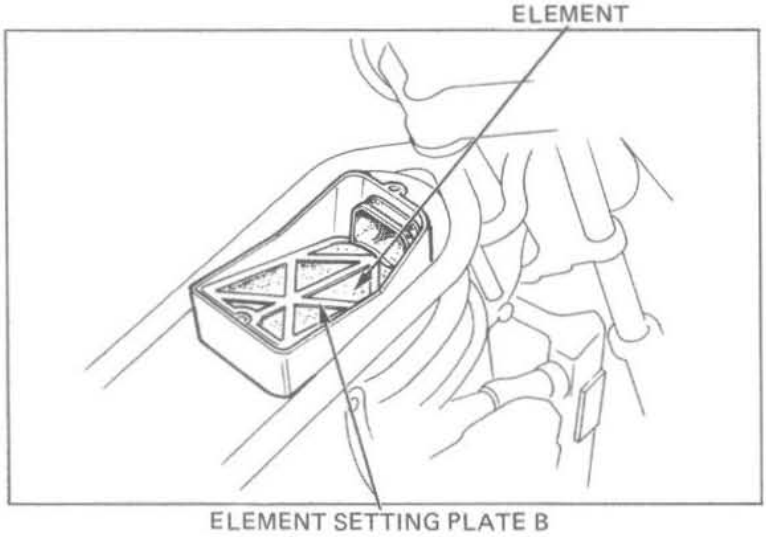

4. FUEL SYSTEM (V45 SABRE) SERVICE INFORMATION

SPECIFICATIONS

Venturi dia.	Primary 10.5 mm (0.41 in) Secondary 30 mm (1.18 in)
Identification No.	VD51C
Float level	7.0 mm (0.28 in)
Main jet	# 128 (Front) # 132 (Rear)
Idle speed	1,000 ± 100 rpm
Throttle grip free play	2–6 mm (0.08–0.24 in)
Pilot screw initial opening	2-1/2

Date of Issue: October, 1982

CARBURETOR REMOVAL

Remove the air cleaner element (page 25-9).
Remove the air cleaner case.

Remove the air cleaner base cover screws and base cover.

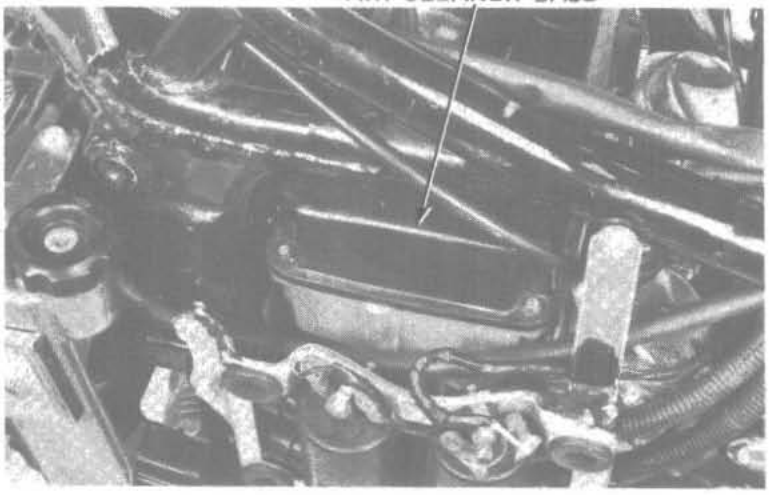

Remove the thermostat cover bolt and disconnect the ground cable.

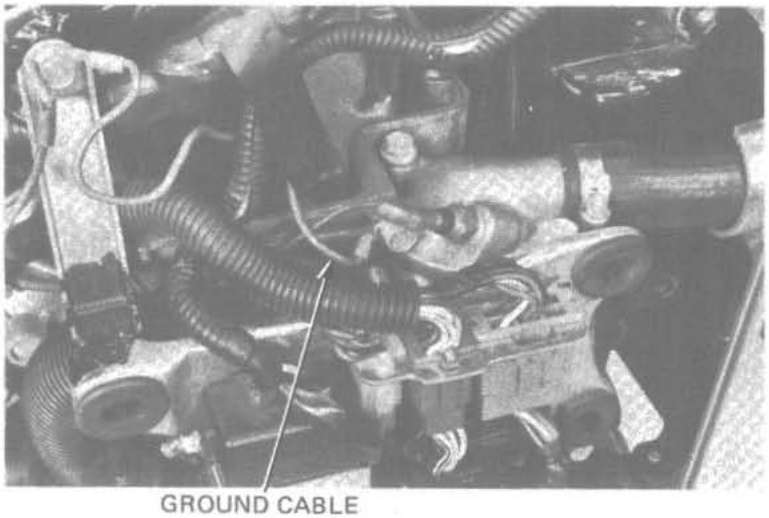

Remove the high tension cords and left electric parts bracket.

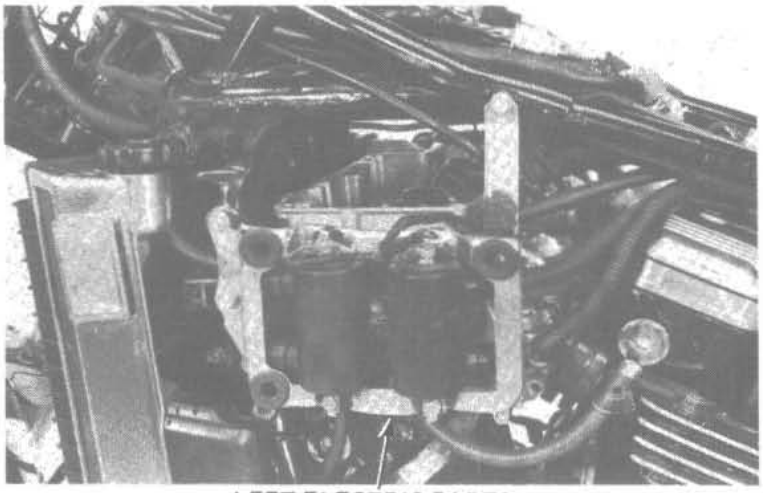

LEFT ELECTRIC PARTS BRACKET

Loosen the carburetor bands and remove the carburetors from the left side.

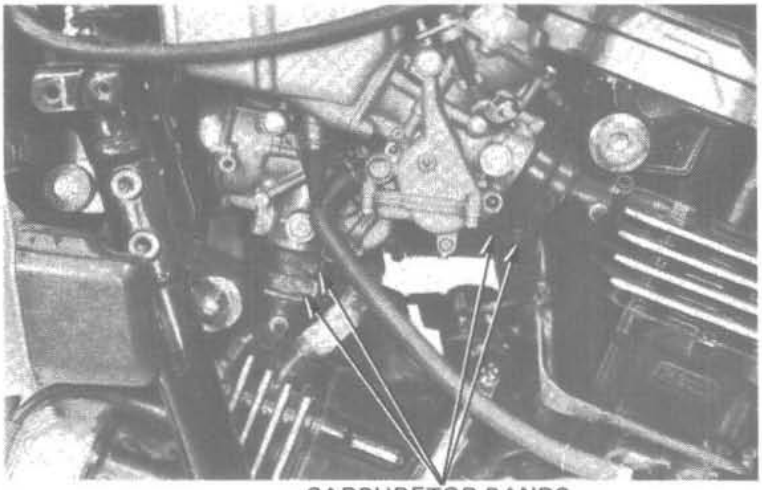

CARBURETOR BANDS

FLOAT CHAMBER FLOAT AND JET

Remove the needle jet holder and needle jet.

NOTE:

> If the needle jet is difficult to remove, carefully press the needle jet from the cylinder side with a soft material.

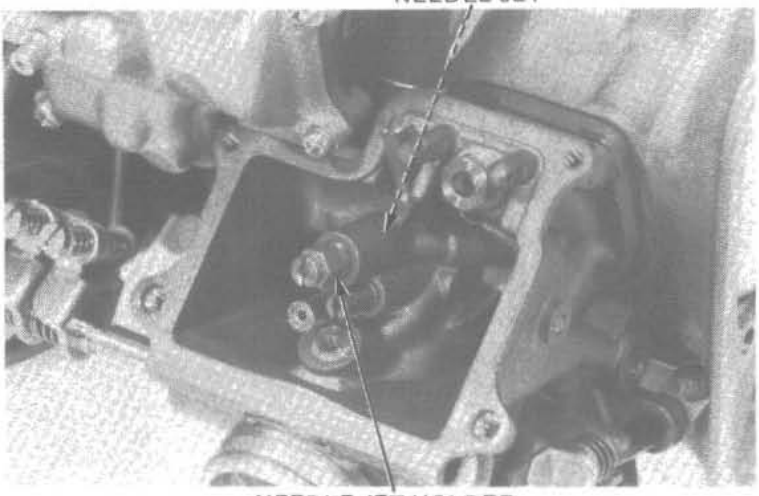

CARBURETOR SEPARATTION/ ASSEMBLY

Remove and install fuel joints as shown.

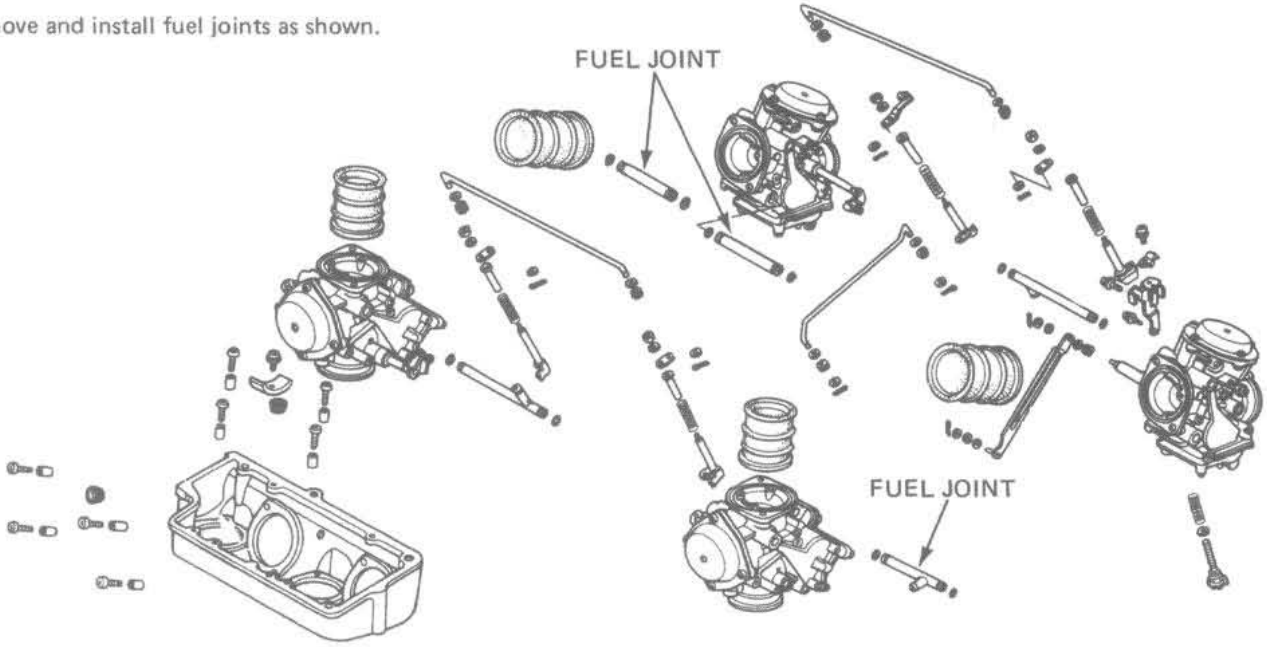

AIR CLEANER

CASE/CHAMBER

Check the air cleaner case for deterioration.

CRANKCASE VENTILATION SYSTEM

Check that breather tube is not restricted.

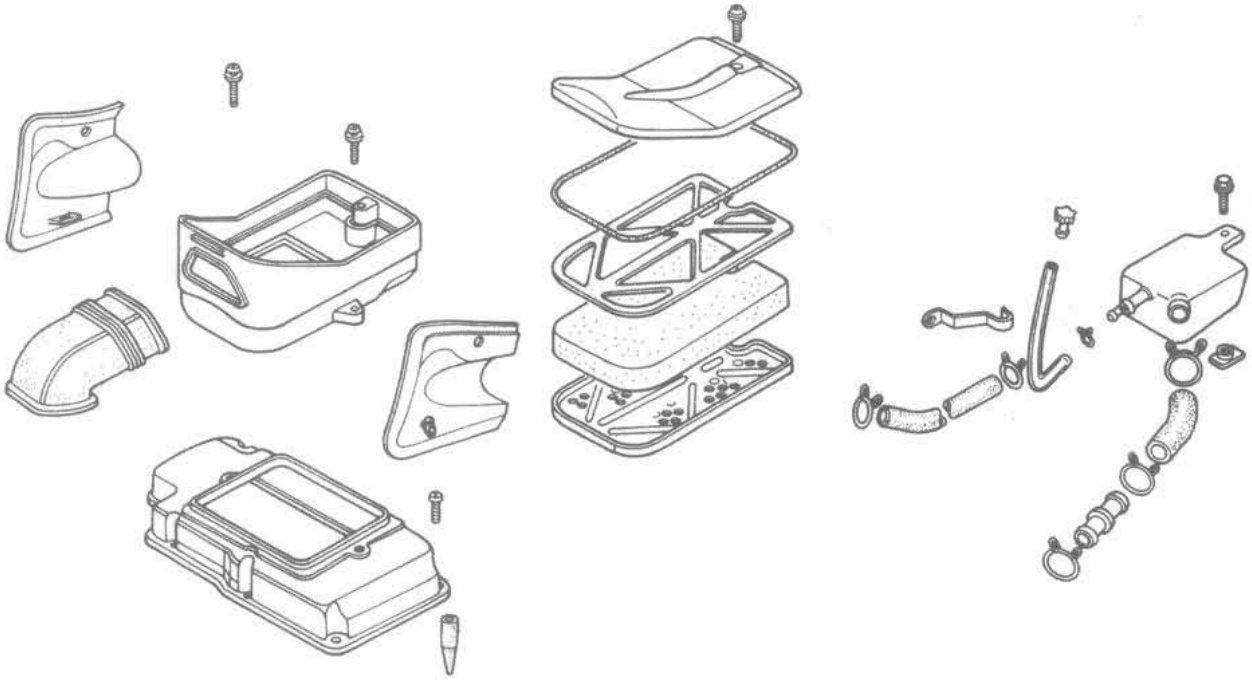

5. CLUTCH

SERVICE INFORMATION

GENERAL

- When reassembling the clutch slave cylinder on the 1983 Sabre, use a new gasket between the body and the piston. See page 7-10 for assembly procedures.

SPECIFICATIONS

	STANDARD	SERVICE LIMIT
Clurch spring height	3.9 mm (0.15 in)	3.6 mm (0.14 in)
Clutch center B I.D.	74.414–74.440 mm (2.9296–2.9307 in)	74.50 mm (2.933 in)
One way clutch inner O.D.	57.755–57.768 mm (2.2738–2.2743 in)	57.74 mm (2.273 in)

SPECIFICATIONS
TORQUE

TORQUE VALUES

Clutch center lock nut 45–55 N·m (4.5–5.5 kg·m, 33–40 ft·lb)

TOOLS

Special
Mainshaft holder 07923–6890101

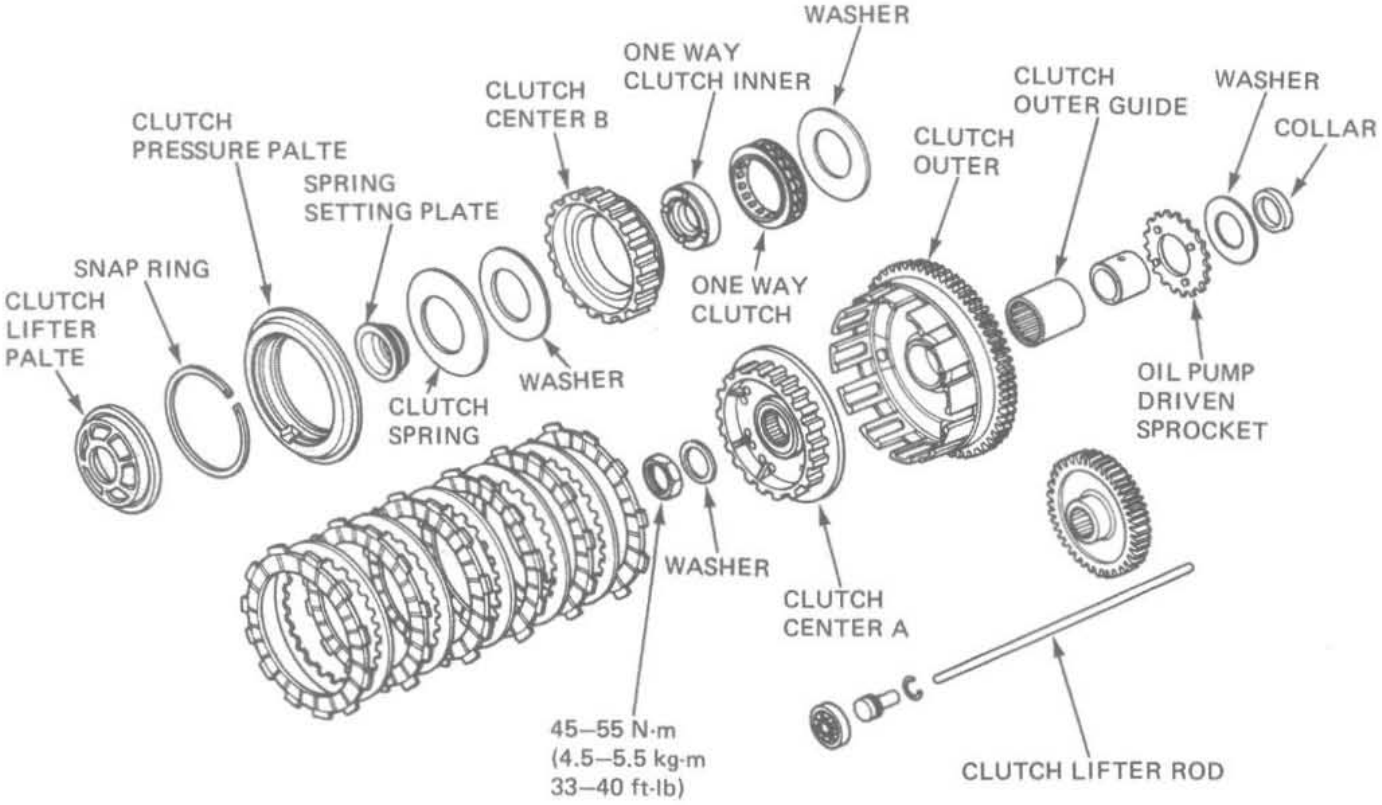

DISASSEMBLY

NOTE:

> Do not operate the clutch lever after removing the clutch or it will be difficult to reassemble.

Remove the snap ring, clutch lifter plate, bearing, lifter guide and lifter rod.

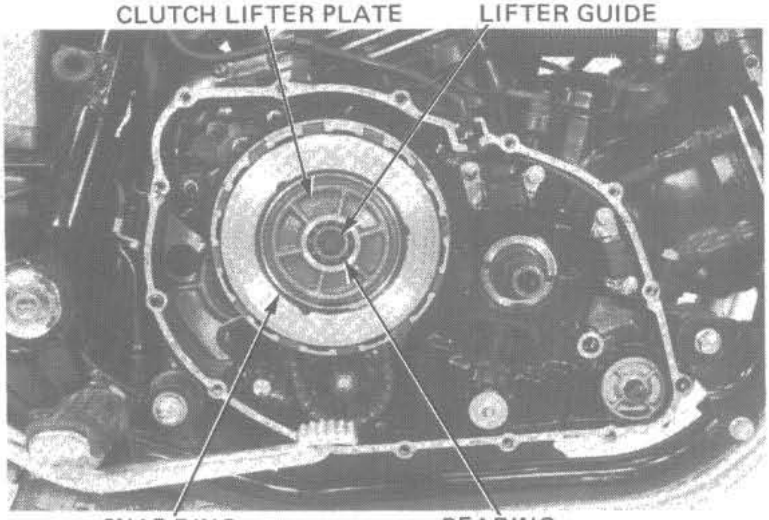

Place the transmission in 6th gear and apply the rear brake.

NOTE:

> When the engine is not in the frame, shift the transmission into gear and use the shaft holder (07923–6890101) to hold the output shaft.

Remove the lock nut and lock washer.
Remove the clutch spring set plate, clutch spring and washer.

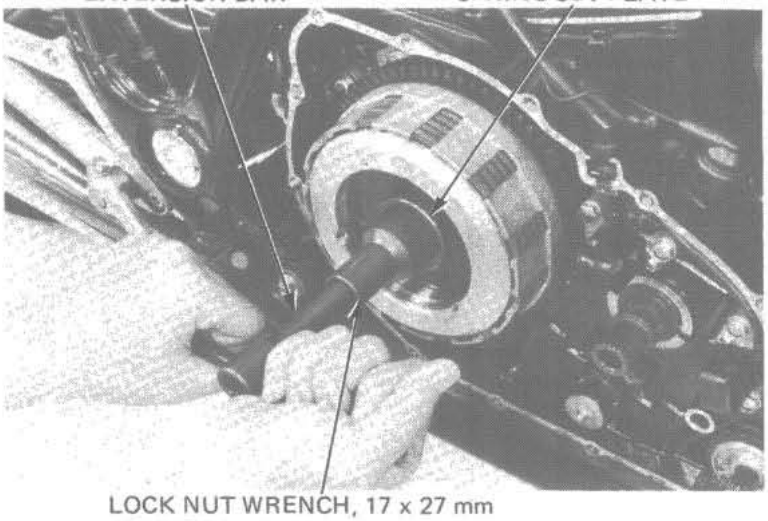

Remove the clutch pressure plate.
Remove the clutch plates and discs.

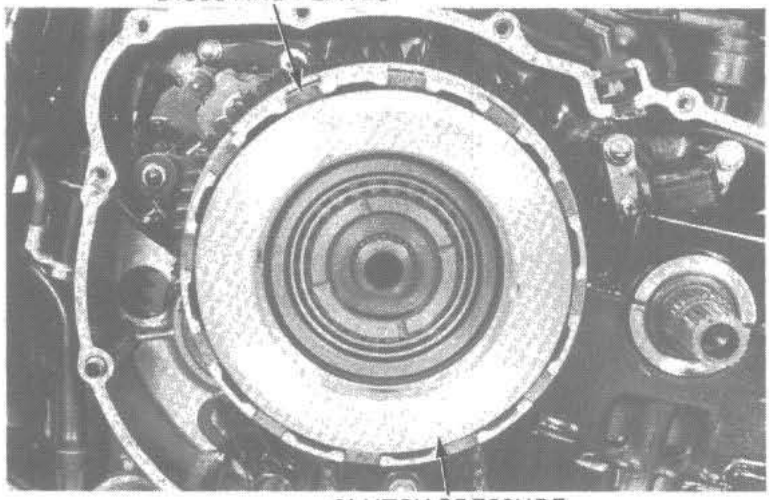

Remove clutch center B and the one way clutch as a unit.

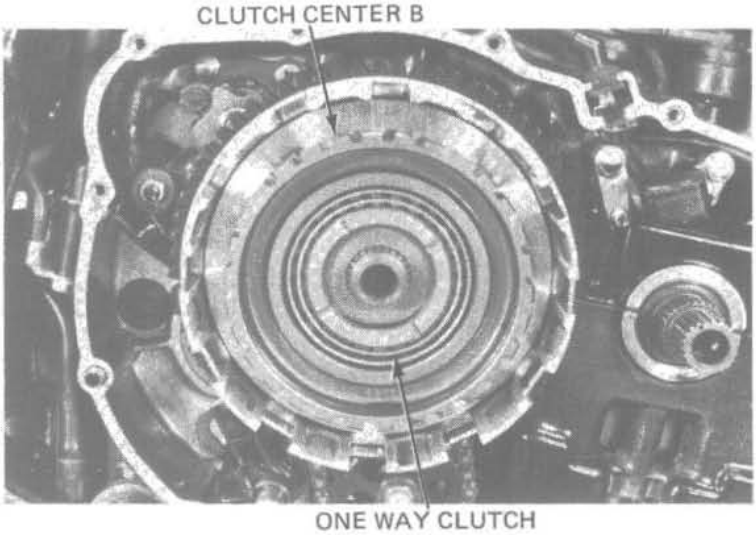

Remove clutch center A and the washer.

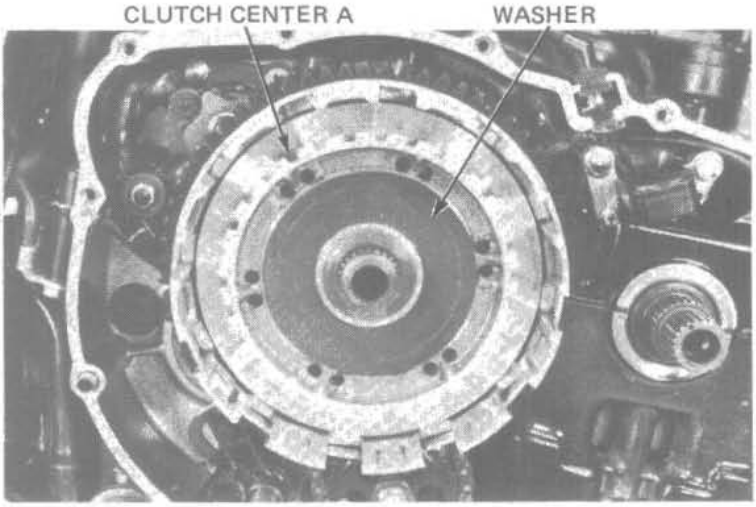

INSPECTION

CLUTCH SPRING

Measure the clutch spring free height. Replace the spring if it is shorter than the service limit.

SERVICE LIMIT: 3.6 mm (0.14 in)

Date of Issue: October, 1982

ONE WAY CLUTCH

Inspect the one way clutch for smooth operation. Check the rollers for excessive wear.

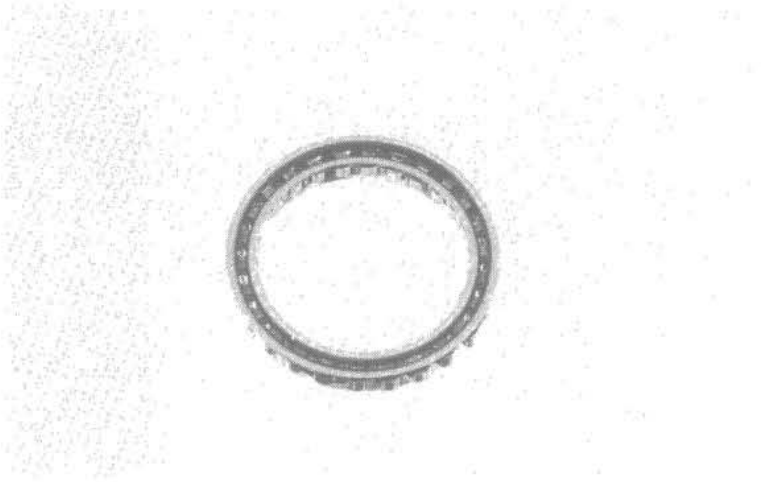

Measure the I.D. of clutch center B.

SERVICE LIMIT: 74.50 mm (2.933 in)

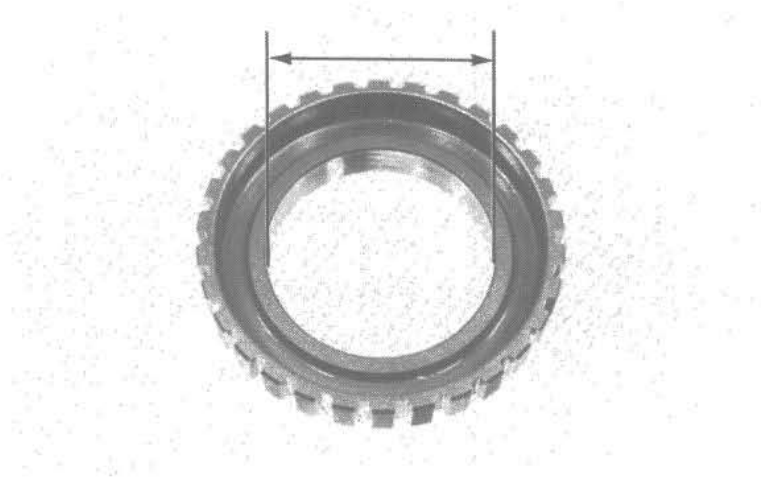

Measure the O.D. of one way clutch inner.

SERVICE LIMIT: 57.74 mm (2.273 in)

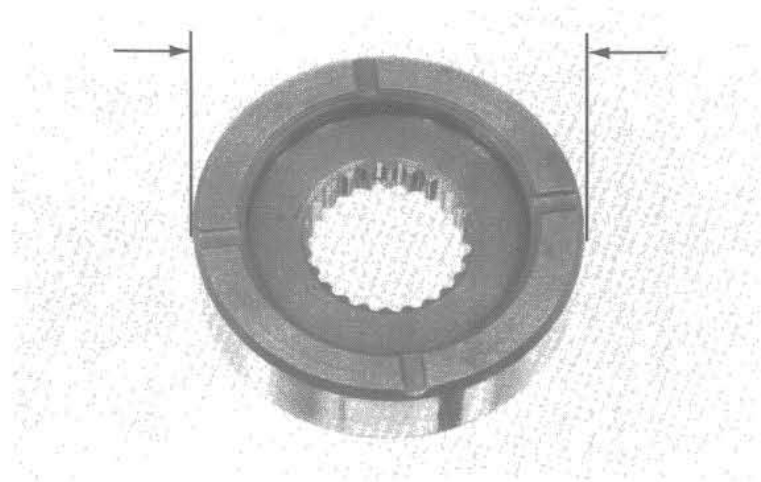

Remove the clutch outer and outer guide.

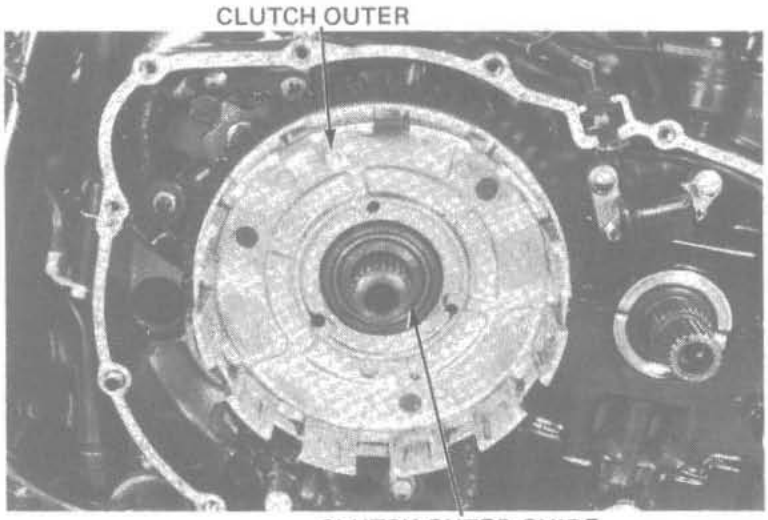

CLUTCH OUTER INSPECTION

Check the slots in the clutch outer for nicks, cuts or indenations made by the friction discs.
Check the needle bearing for damage or excessive play.

If the needle bearing is difficult to remove, use the following tools.
Driver: 07749–0010000
Attachment, 37 x 46 mm: 07746–0010200
Pilot, 35 mm: 07746–0040800

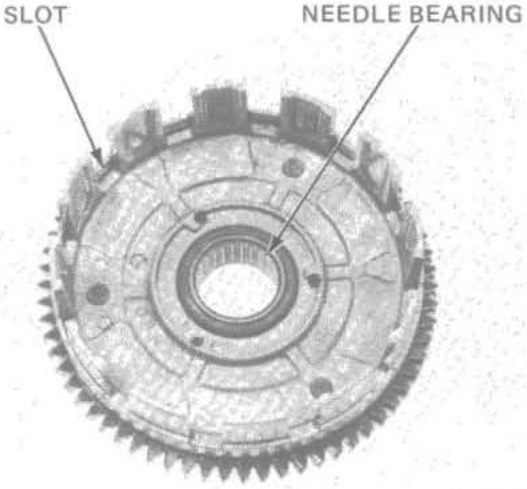

CLUTCH ASSEMBLY

Install the drive sprocket spacer.
Install the clutch outer guide over the mainshaft.
Install the needle brearing into the clutch outer.

Align the holes in the clutch outer with the pins on the oil pump drive sprocket and install the clutch outer over the guide.

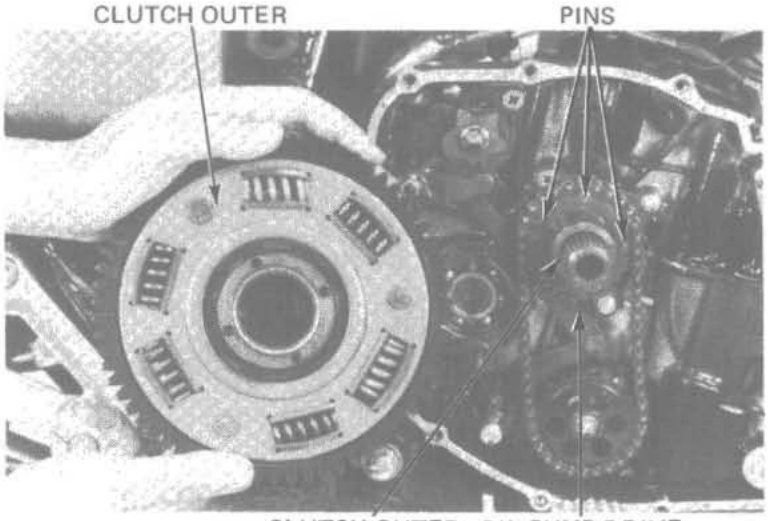

Date of Issue: October, 1982

Install the clutch center A and washer.

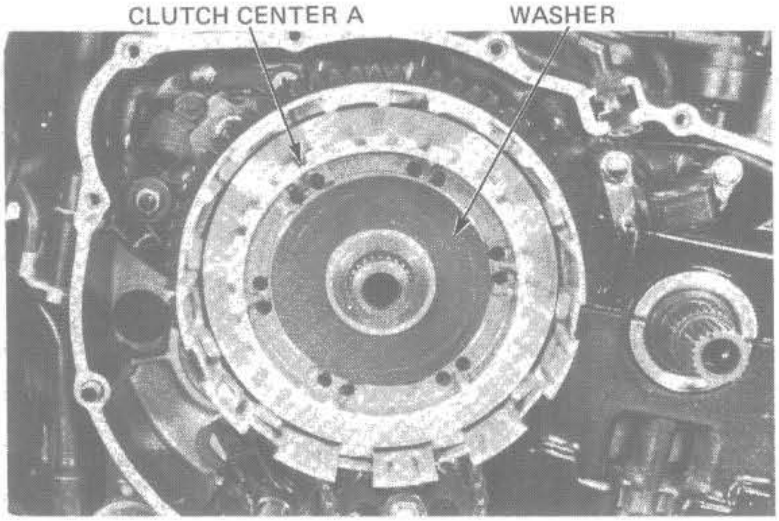

Place the clutch inner onto the mainshaft with its grooves facing out. Place the one-way clutch over the inner with its markings facing out.

Install clutch center B, with its grooved side facing in, over the one-way clutch. Turn center B counter clockwise as you install it.

CAUTION:

Make sure the one way clutch assembly is installed correctly by turning clutch center B. It should turn counterclockwise freely and should not turn clockwise.

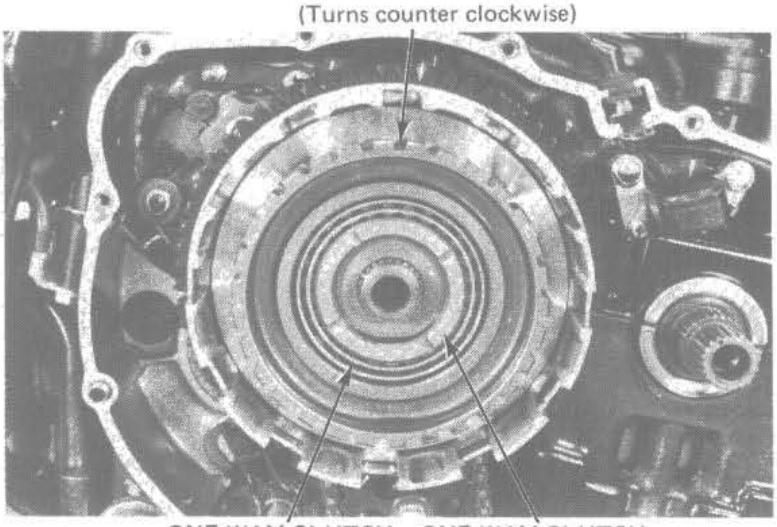

Coat the discs and plates with clean engine oil and install them as shown.

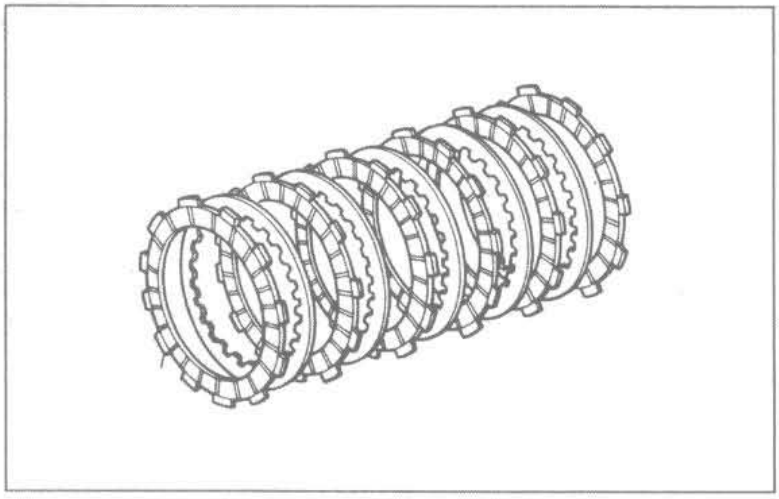

Install the clutch pressure plate.

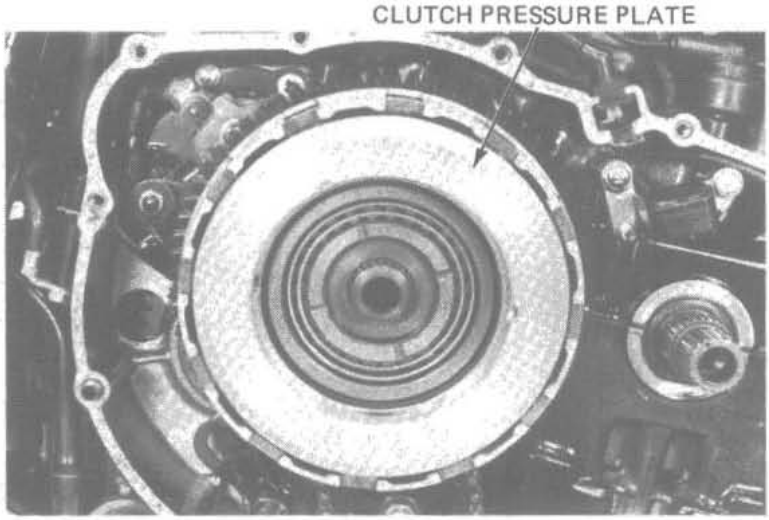

Install the clutch spring set plate, clutch spring and washer.

NOTE:

Install the clutch spring with dished face towards the inside.

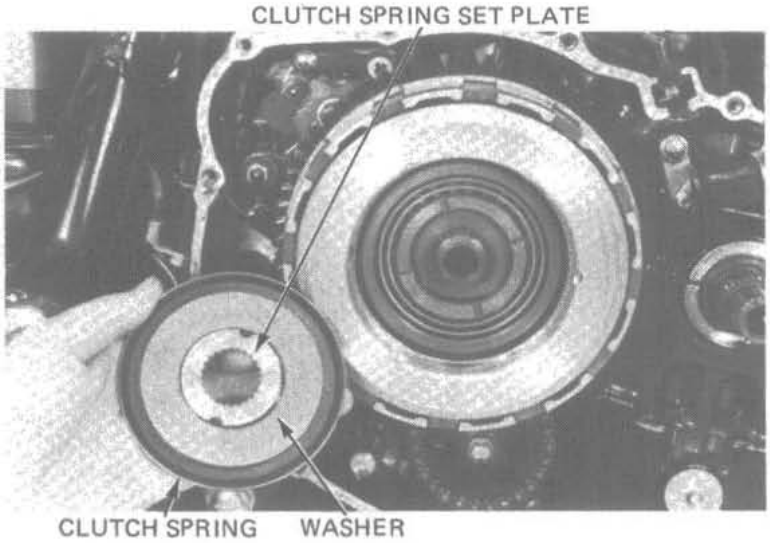

Install the lock washer with its dished face towards the inside.

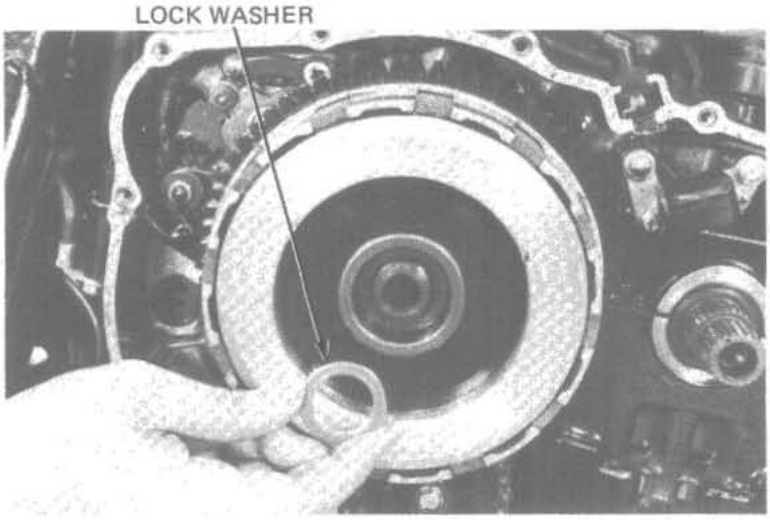

Place the transmission in 6th gear.
Apply the rear brake and tighten the lock nut.

NOTE:

> When servicing the clutch with the engine out of the frame, shift the transmission into gear and use the Shaft Holder (07923–6890101) to hold the output shaft.

TORQUE: 45–55 N·m (4.5–5.5 kg-m, 33–40 ft-lb)

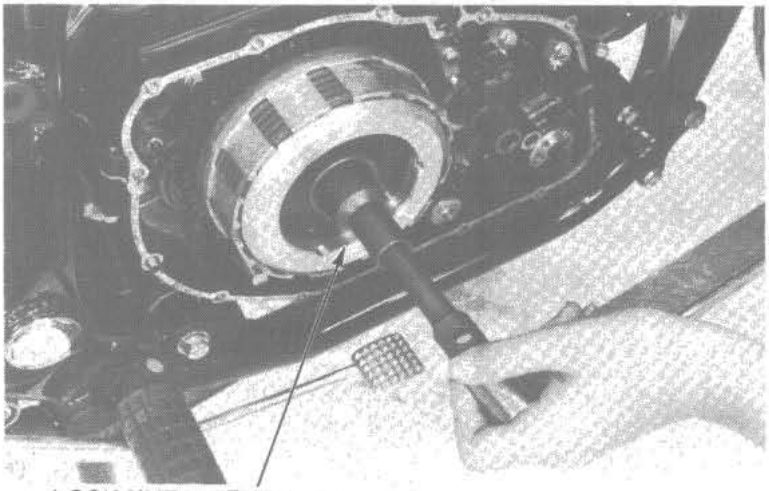

LOCK NUT WRENCH 17 x 27 mm
COMMERCIALLY AVAILABLE IN U.S.A.

Install the clutch lifter rod.
Install the clutch lifter plate, lifter guide and bearing.

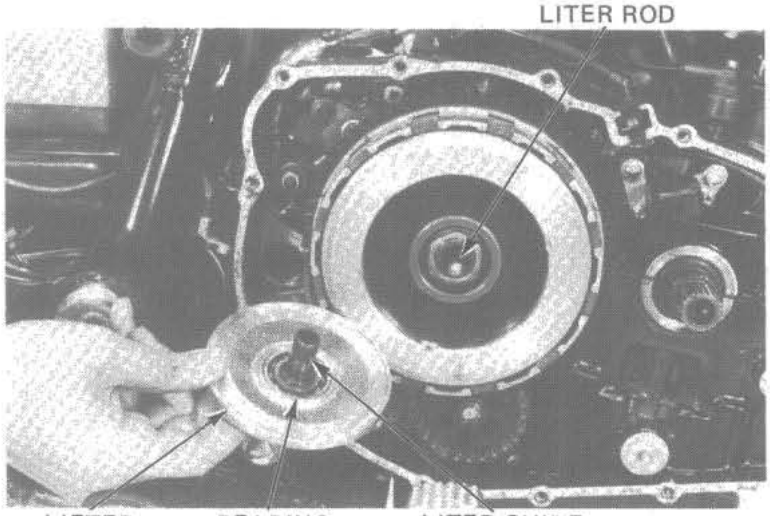

Install the snap ring.

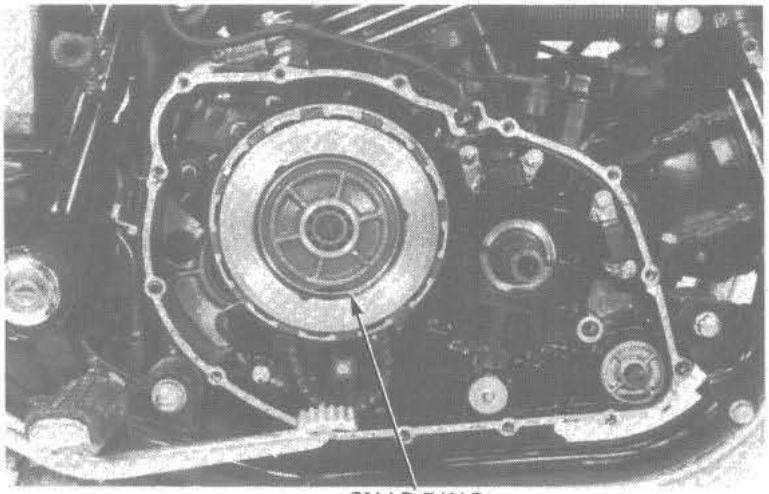

6. CYLINDER HEAD/VALVE

SERVICE INFORMATION

TOOLS

Special
Attachment 07943–MB0000

VALVE GUIDE REPLACEMENT

Drive new guides in from the rocker arm side of the cylinder head.

NOTE:

Cylinder head heat should still be at 100°C (212°F) for installation of the new guides.

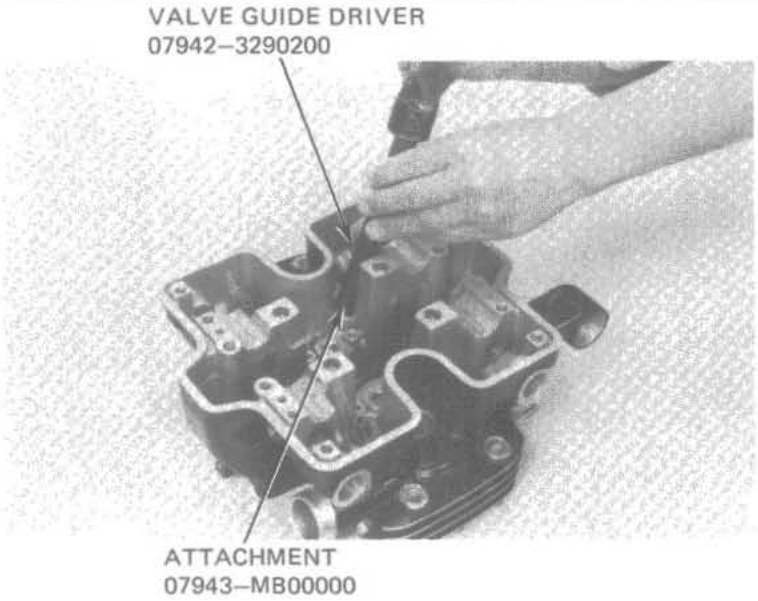

7. CRANKSHAFT/PISTON

SERVICE INFORMATION

SPECIFICATIONS

ITEM		STANDARD	SERVICE LIMIT
PISTON	Ring end gap top	0.15–0.30 mm (0.006–0.012 in)	0.50 mm (0.02 in)
	Ring end gap second	0.15–0.30 mm (0.006–0.012 in)	0.50 mm (0.02 in)

8. TRANSMISSION

GEAR TOOTH CONTACT PATTERN CHECK

COUNTERSHAFT/OUTPUT DRIVE GEAR ADJUSTMENT SHIMS

- **A: 0.4 mm (0.016 in)**
- **B: 0.45 mm (0.018 in)**
- **C: 0.5 mm (0.020 in)**
- **D: 0.55 mm (0.022 in)**
- **E: 0.6 mm (0.024 in)**

COUNTERSHAFT INSPECTION

For 1983 models it is no longer necessary to select an output gear case gasket before selecting a countershaft spacer.
After backlash inspection, if there is no other reason for selecting a new gear case gasket (see page 13-16), simply install the countershaft assembly on the lower crankcase with the existing gasket. Then select a spacer using the procedure described on page 13-18 if necessary.

Date of Issue: October, 1982

9. FRONT WHEEL/SUSPENSION

SPECIFICATIONS

		STANDARD	SERVICE LIMIT
Fork spring free length		552.6 mm (21.75 in)	541.7 mm (21.3 in)
Front fork fluid capacity	V45 MAGNA	Right 420 cc (14.8 oz), Left 390 cc (13.7 oz)	–
	V45 SABRE	Right 360 cc (12.7 oz), Left 375 cc (13.2 oz)	–
Front fork air pressure	V45 SABRE	0–40 kPa (0–0.4 kg/cm^2, 0–6 psi)	–
	V45 MAGNA	0–40 kPa (0–0.4 kg/cm^2, 0–6 psi)	–

HEADLIGHT

Both the Sabre and Magna models a replaceable quart halogeh headlight bulb for 1983. For headlight, case and bracket removal procedures, refer to the base manual.

NOTE:

> Do not leave fingerprints on the bulb, they may create hot spots. If possible, wear clean gloves when installing the halogen bulb. If you do touch the bulb with bare hands, clean it with an alcohol-moistened cloth before installing it in the case.

BULB REPLACEMENT

Remove the mounting screws from the headlight case, pull the lamp assembly from the case and remove the socket from the bulb.

Reassemble in the reverse order.

(V45 SABRE)

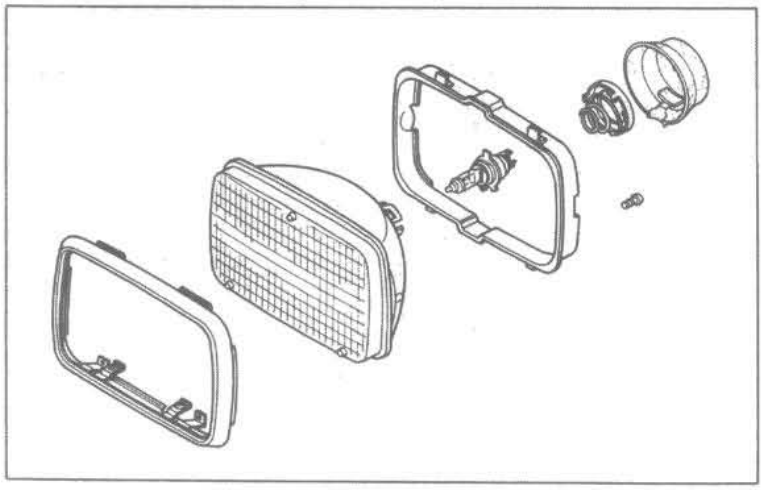

(V45 MAGNA)

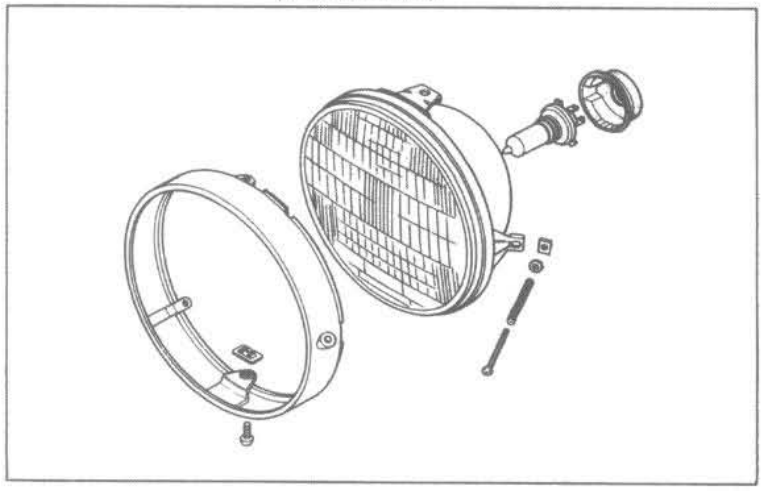

INSTRUMENTS (V45 SABRE)

Assemble and install the instruments in the reverse order of disassembly and removal.

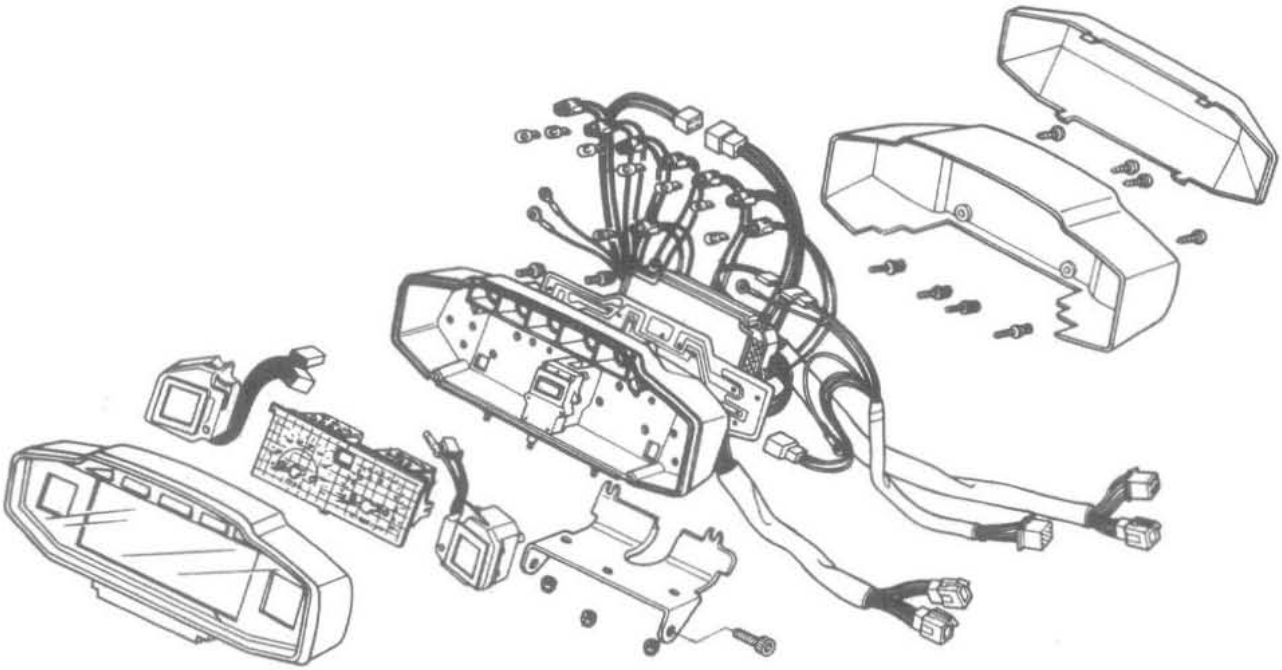

Date of Issue: October, 1982

FRONT FORK (V45 SABRE)

ANTI-DIVE CASE

Remove the circlip and the orifice setting plate. Remove the pin on the inside of the case and pull out the orifice.
Check the orifice for clogging by applying compressed air. Also check the orifice for damage and replace if necessary.
Remove the check valve setting screw, valve spring and check ball.

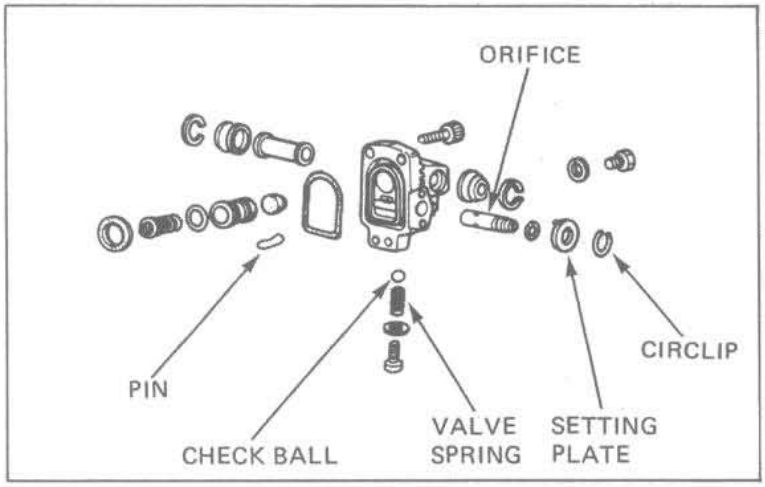

DISASSEMBLY/ASSEMBLY

A sponge washer and a plastic seal washer have been added to the fork tube assemblies between the dust seal and the snap ring.

The fork assembly service procedures are the same as for 1982.

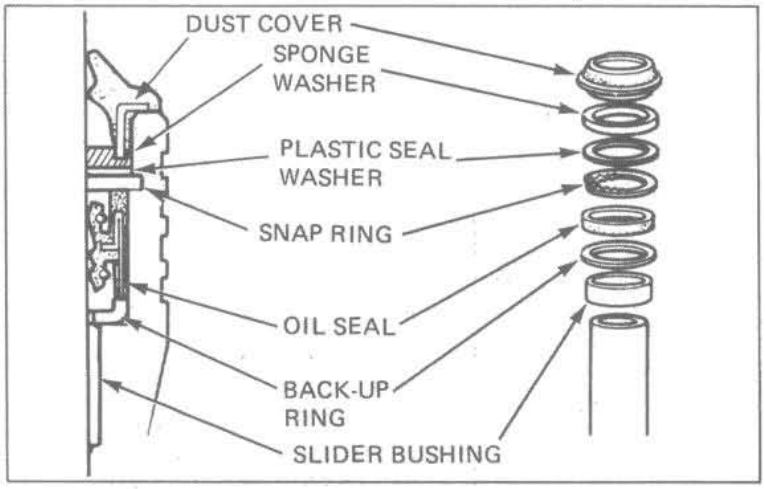

10. REAR WHEEL/SUSPENSION/BRAKE (V45 SABRE)

SERVICE INFORMATION

TORQUE VALUES

Final driven flange mount bolt	50–60 N·m (5–6 kg-m, 36–43 ft-lb)

REAR WHEEL

ASSEMBLY

Apply liquid sealant to the final driven flange mating surface and use a thread lock agent on the bolt threads.
Tighten the bolts to the specified torque.

TORQUE: 50–60 N·m (5–6 kg-m, 36–43 ft-lb)

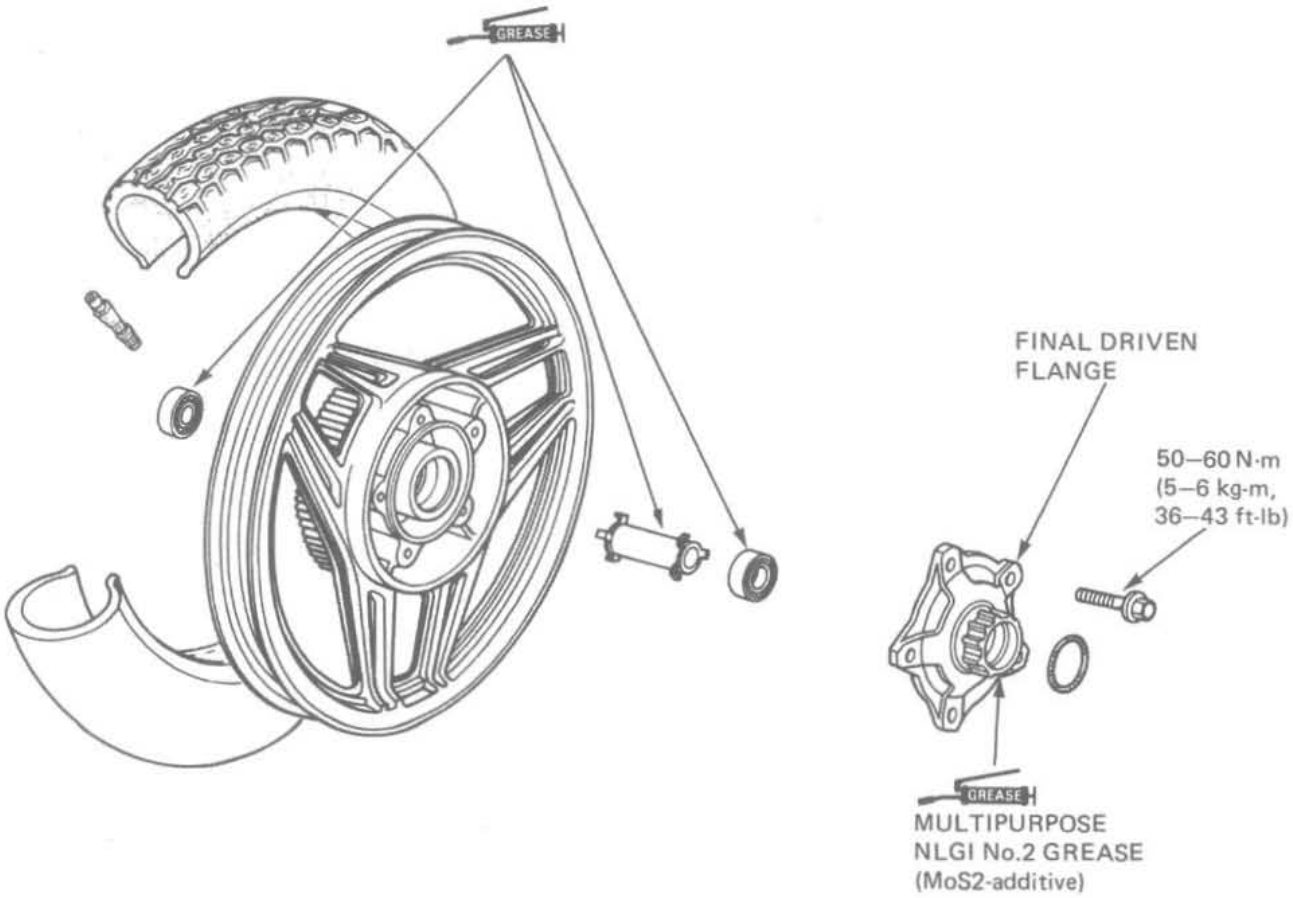

Date of Issue: October, 1982

11. SWITCHES

BRAKE AND TAIL SENSOR (V45 SABRE)

Turn the ignition switch on.
Check the source voltage at the black/brown lead. If there is no voltage, check and repair the source circuit.

If there is voltage, measure the voltage at the white/yellow (positive) and green/black (negative) wires.

VOLTAGE: 5V

If there is no voltage, replace the sensor unit.

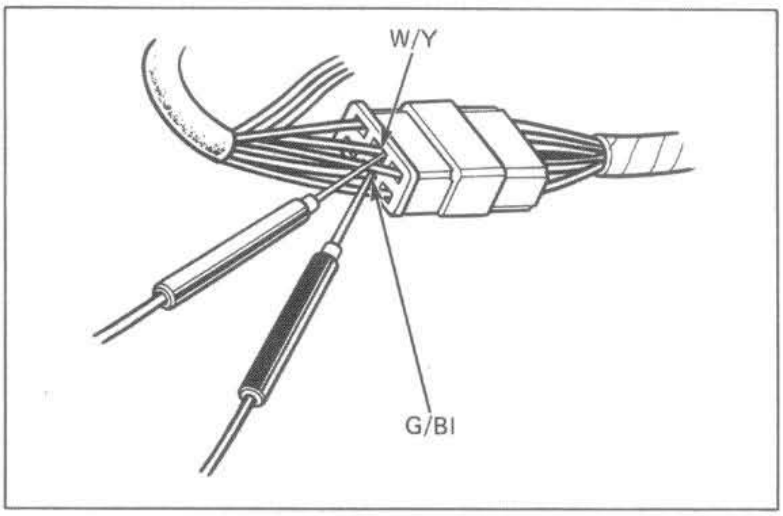

FUEL PILOT LAMP

CHECK UNIT (V45 MAGNA)

Turn the ignition switch ON and check the pilot light for operation.

- If the pilot high come on and go off after 2–3 seconds with the ignition on, the check unit is good.
- If the pilot light doesn't come on at all, check for the pilot light. If it is good, check for the unit. Make a circuit using pilot light (T7 3W), dry battery (12V) and the unit as shown. The pilot lights should come on and go off after 2–3 second. If the unit is good, check the wire harness for a open circuit.
- If the pilot light continue to light on with the ignition on, check for an amount of fuel in the tank or the stop and tail light. Fill the fuel tank or replace the stop and tail light if necessary and recheck. If the pilot light continue to light on yet, check the unit as shown above. If the unit is good, check for an short circuit in the wire harness.

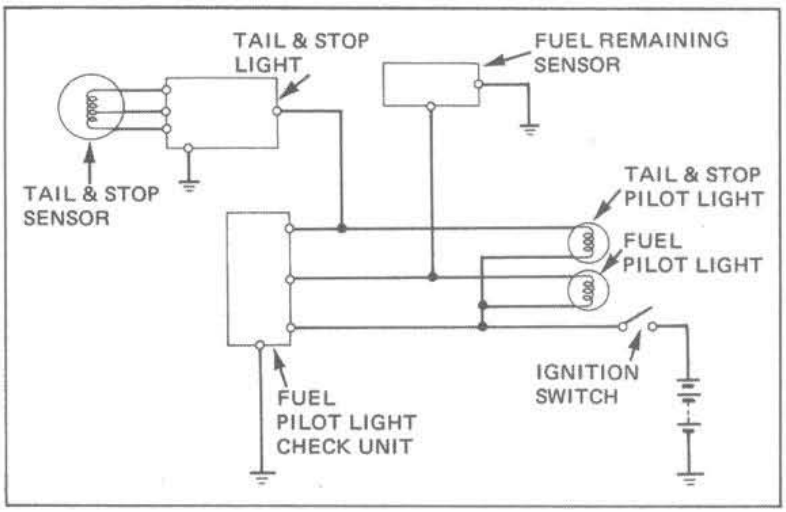

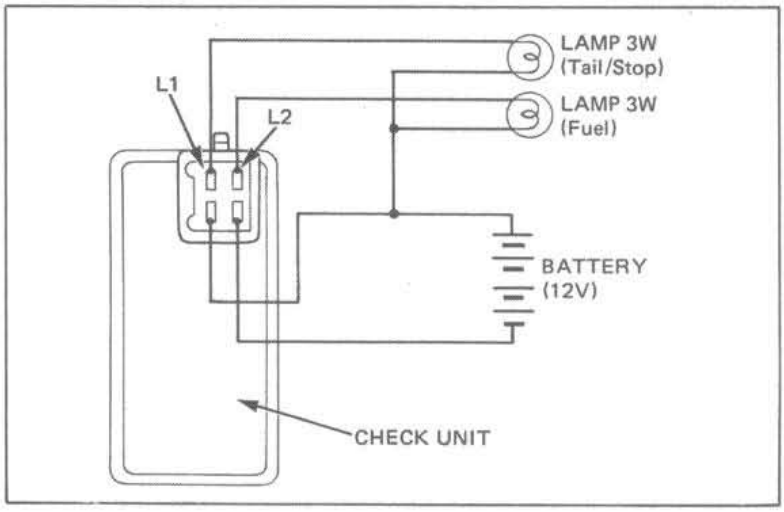

HONDA V45 SABRE MAGNA

12. WIRING DIAGRAMS V45 SABRE (VF750S)

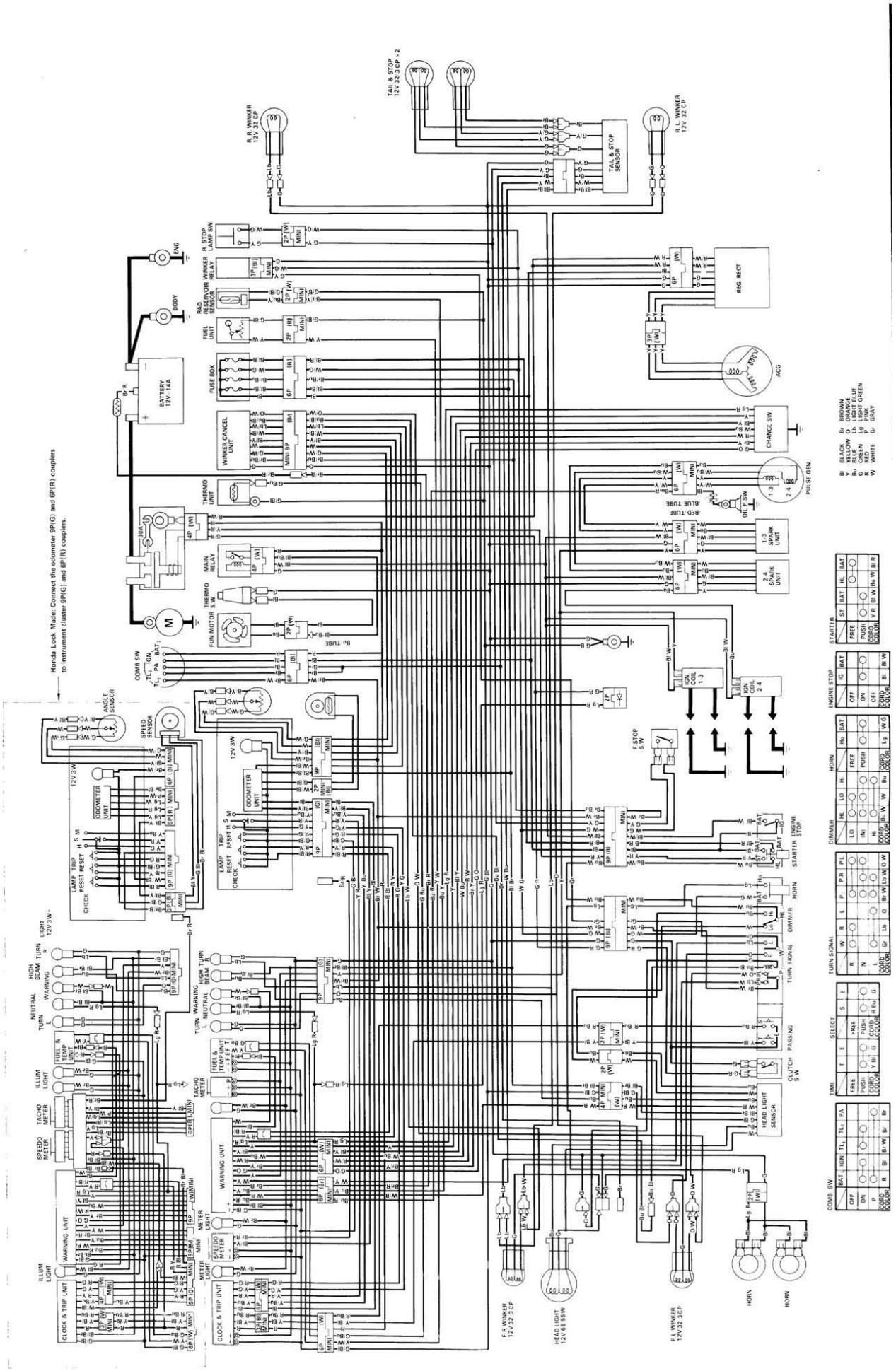

V45 MAGNA (VF750C)

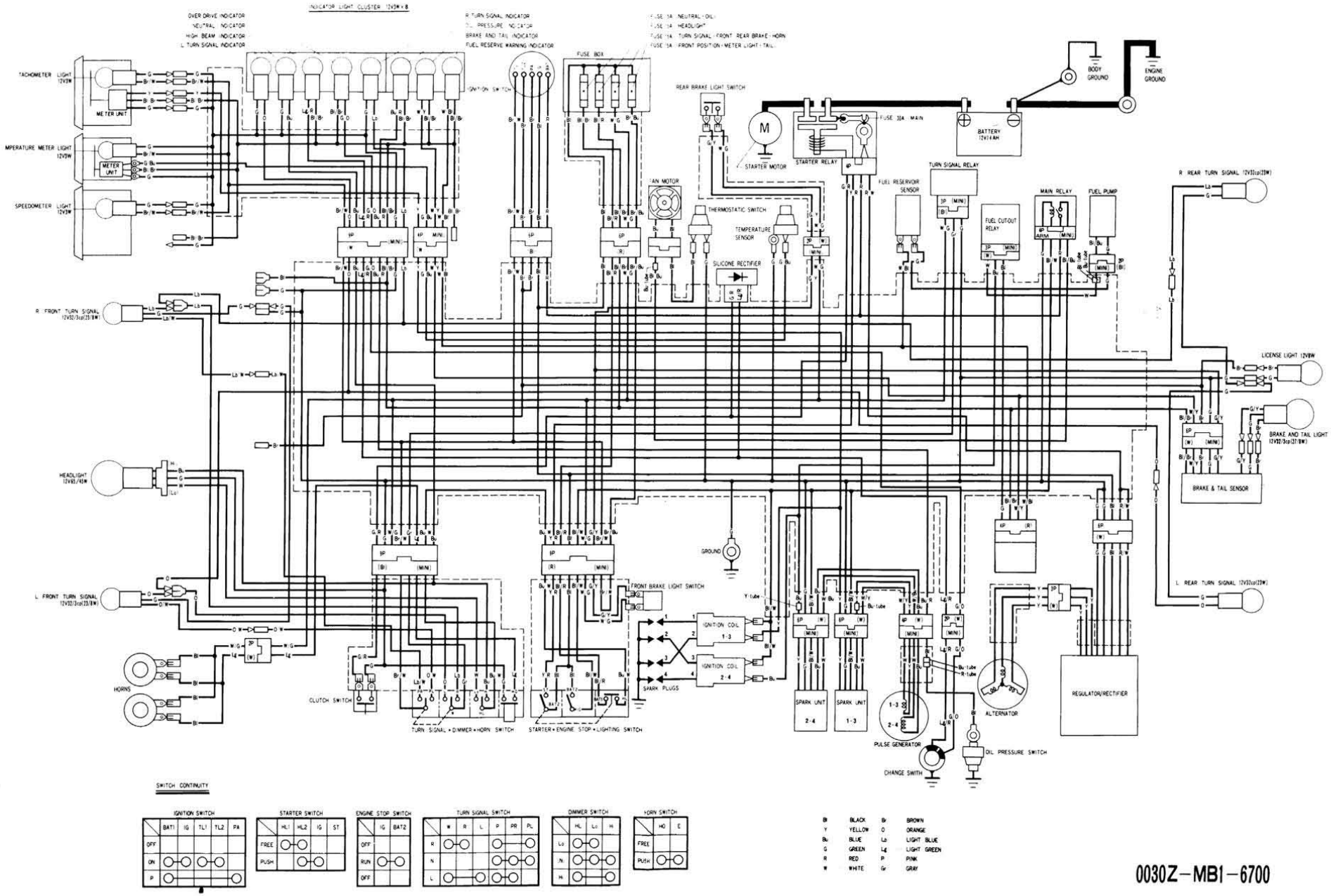

Date of Issue: October, 1982

13. TECHNICAL FEATURES

ONE-WAY CLUTCH SYSTEM

First time on a production motorcycle, this system has been proven on the race circuits of Europe in Hondas Gran Prix road racers.

Rear wheel lock up caused by rapid downshifting and the resulting high engine compression braking force; is prevented by the slippage of the one-way clutch.

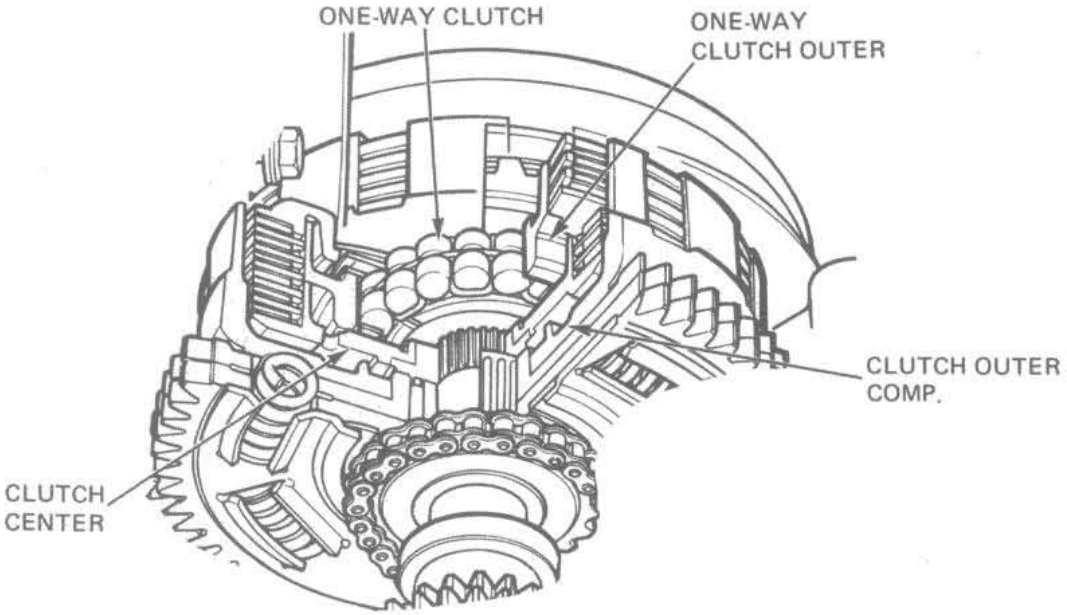

• Construction

The one-way clutch is installed with the clutch center inside the clutch outer. Half the clutch plates are controlled by the one-way clutch. The one-way clutch allows those plates to slip when backloading force during deceleration might normally cause the rear wheel to lock-up.
Except for the one-way clutch, the primary driven gear/clutch assembly is a conventional design.

• Operation

During acceleration, cruising and deceleration, power is transmitted through the clutch in the normal manner:
Clutch outer → friction disc → plate → one-way clutch → mainshaft.

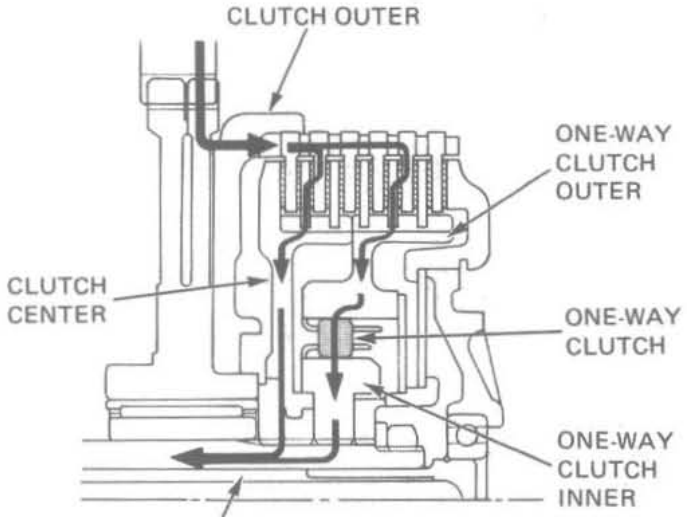

When there is a backloading on the clutch caused by the rear wheel nearing lock-up, the one-way clutch (A) will slip just enough to prevent the wheel from locking: without losing the benefit of maximum engine compression braking.

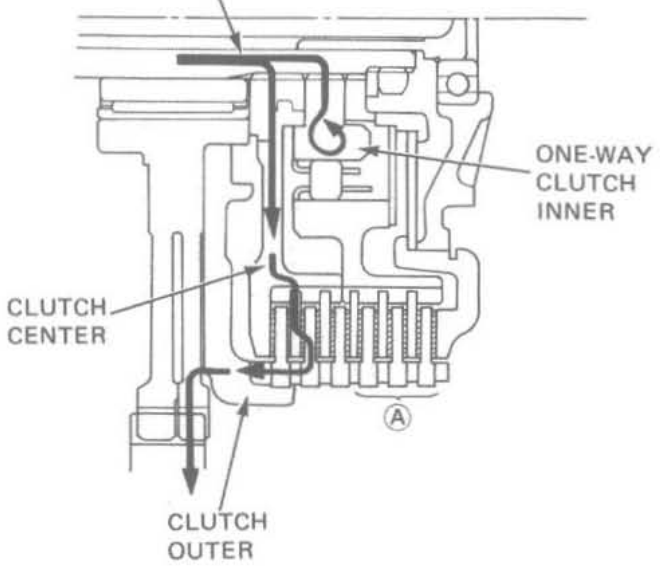

• POWER FLOW DIAGRAM

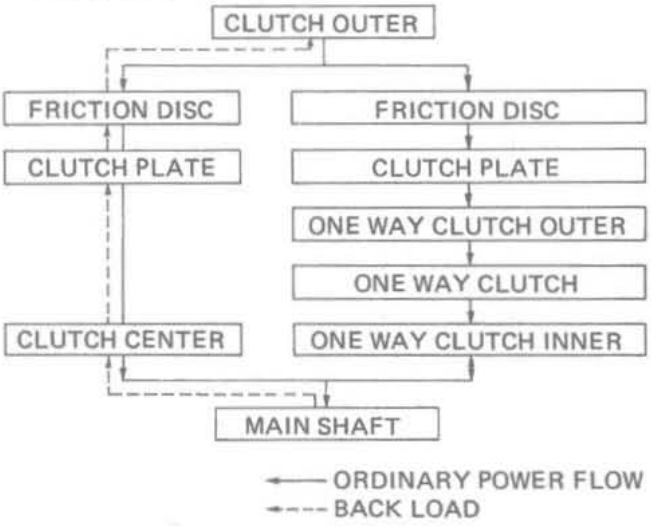

Date of Issue: October, 1982

OPTICAL-FIBER ANTITHEFT DEVICE

The divice consists of a built-in power source, buzzer, photo transistor light emitting diode (LED), and fiber scope locking wire.

Function

Braking the fiber scope causes the buzzer to sound due to interrupted transmission of light from the LED to the photo transistor. A 9V dry battery is used to operate the system. The wire can be connected and disconnected with the ignition key and is stored in a compartment below the left side cover.